CRT DATA

T5490

6-1-66

CRT Engineering

DESCRIPTION

The Tektronix Type T5490 is a 5-inch round, flat-faced, direct-viewing storage cathode-ray tube designed for oscilloscope use.

ELECTRICAL DATA

Writing gun	
Focusing method	Electrostatic
Deflecting method	Electrostatic
Heater voltage	6.3 volts rms
Heater current at 6.3 volts	0.6 ±10% A
Direct interelectrode capacitance, approximate:	
Grid no. 1 to all other electrodes	8.2 pF
Cathode to all other electrodes	4.4 pF
D1 to D2	1.9 pF
D1 to all other electrodes	6.2 pF
D2 to all other electrodes	6.2 pF
D3 to D4	1.6 pF
D3 to all other electrodes	4.5 pF
D4 to all other electrodes	4.6 pF
Storage System	
Flood gun heater voltage	12.6 volts DC
Flood gun heater current at 12.6 volts	0.6 ±10% A
Direct interelectrode capacitance, approximate:	
Flood gun cathode to all other electrodes	28 pF
STB 1 to all other electrodes	98 pF
STB 2 to all other electrodes	96 pF
STB 1 to STB 2	22 pF

MECHANICAL DATA

Overall length	18-1/8 ±1/8 inches
Greatest diameter of bulb	5-1/2 inches
Minimum useful screen dimensions:	
Width	4-1/2 inches
Height	2-3/8 inches
Bulb number	Special
Base[1]	Special
Basing	Special
Base alignment:	
Keyway aligns with D3-D4 trace	±10°
Positive voltage on D1 deflects beam approximately toward pin no. 4.	
Positive voltage on D3 deflects beam approximately toward pin no. 1.	
Angle between D1-D2 and D3-D4 trace	90° ±1°
D1-D2 trace aligns with major axis of screen	±3°

RATINGS (absolute maximum values)[2]

Writing gun	
Average deflection plate voltage	4500 volts max
D1-D2 shield voltage	4500 volts max
Astigmatism electrode voltage	4500 volts max
Focus electrode voltage	1500 volts max
Accelerator voltage	4500 volts max
Accelerator input	6 watts max
Grid no. 1 voltage	
Negative bias value	150 volts max
Positive bias value	0 volts max
Positive peak value	2 volts max
Peak heater-cathode voltage:	
Heater negative to cathode:	
During warm-up period not to exceed 15 seconds	180 volts DC max
After equipment warm-up period	125 volts DC max
Heater positive to cathode	125 volts DC max
Peak voltage between astigmatism and/or any deflection electrode	500 volts DC max
Flood gun	
Storage target backplate voltage	4500 volts max
Locate zone voltage	4500 volts max
Ion repeller voltage	4500 volts max
CE 2 voltage	4500 volts max
Flood gun accelerator and CE 1 voltage	4500 volts max
Flood gun cathode voltage	4500 volts max
Peak voltage between any two electrodes in the storage system	300 volts max
Flood gun cathode current to flood gun accelerator, CE 2, ion repeller, locate zone, STB 1, and STB 2:	
To any electrode	±20 ma max
To all electrodes	35 ma max
Peak heater-cathode voltage	±175 volts max
Electrode power dissipation	
Flood gun accelerator, CE 2, and ion repeller	6 watts max
STB 1, STB 2, and locate zone	5 watts max

TYPICAL OPERATING CONDITIONS[2]

Writing gun	
Accelerator voltage	4000 volts DC
Average deflection plate voltage	4000 volts DC
D1-D2 shield voltages[3]	3950 to 4050 volts DC
Astigmatism electrode voltage[4]	3925 to 4050 volts DC
Focusing electrode voltage[4]	600 to 800 volts DC
Grid no. 1 voltage[5]	-90 to -120 volts DC
Deflection factors	
D1-D2	22.5 to 26.5 volts/cm
D3-D4	9.5 to 10.8 volts/cm
Useful scan[6]	
D1-D2	10 cm
D3-D4	6 cm

Focusing electrode current for any operating condition	±10 μA
Spot position (undeflected)[7]	5 mm from geometric center
Raster distortion at 100% useful scan[8]	1.7% max

Storage System

Storage target backplate 1 and 2 voltage[9]	3900-4095 volts DC
Flood gun accelerator and CE 1 voltage[10]	4000 volts DC
Ion repeller voltage	4010 volts DC
CE no. 2 voltage[11]	3975 to 4025 volts DC
Locate zone voltage	3873 volts DC
Flood gun cathode voltage	3825 volts DC
Useful coverage	6 x 10 cm

MAXIMUM CIRCUIT VALUES

Grid no. 1 circuit resistance	1.5 MΩ max

NOTES

1. See outline drawing. The socket for this base should not be rigidly mounted. It should have flexible leads and be allowed to move freely so that it cannot impress lateral strains through the socket contacts onto the base pins.
2. All voltages taken with respect to the writing gun cathode.
3. This potential is adjusted to optimize writing gun geometry.
4. Recommended range. Adjust for best overall focus.
5. Visual extinction of undeflected spot.
6. The deflection plates intercept part of the beam near the edge of the scan; therefore, a low impedance deflection drive is desirable.
7. Connect free deflection electrodes to accelerator.
8. With a 6 x 10 cm rectangular raster centered on the face of the tube, the raster edges will not deviate from straight parallel lines by more than 1 mm total on the left and right edges, nor by more than 1 mm total top and bottom.
9. Adjust to operating level in stored mode.
10. The flood gun accelerator and the first collimation electrode are connected internally.
11. Flood gun coverage and uniformity is adjusted by this potential.

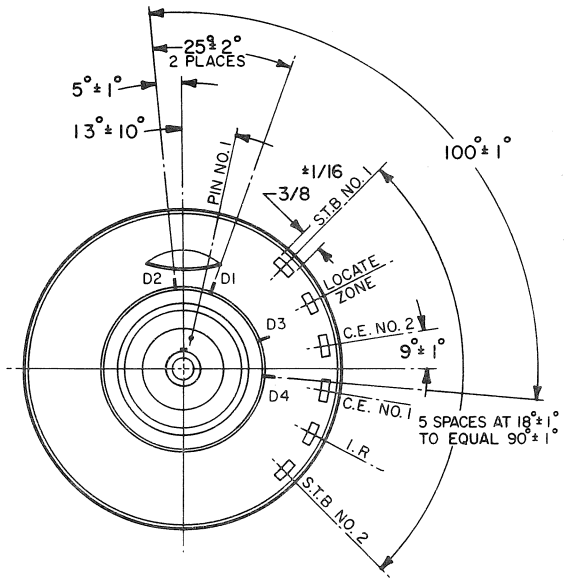

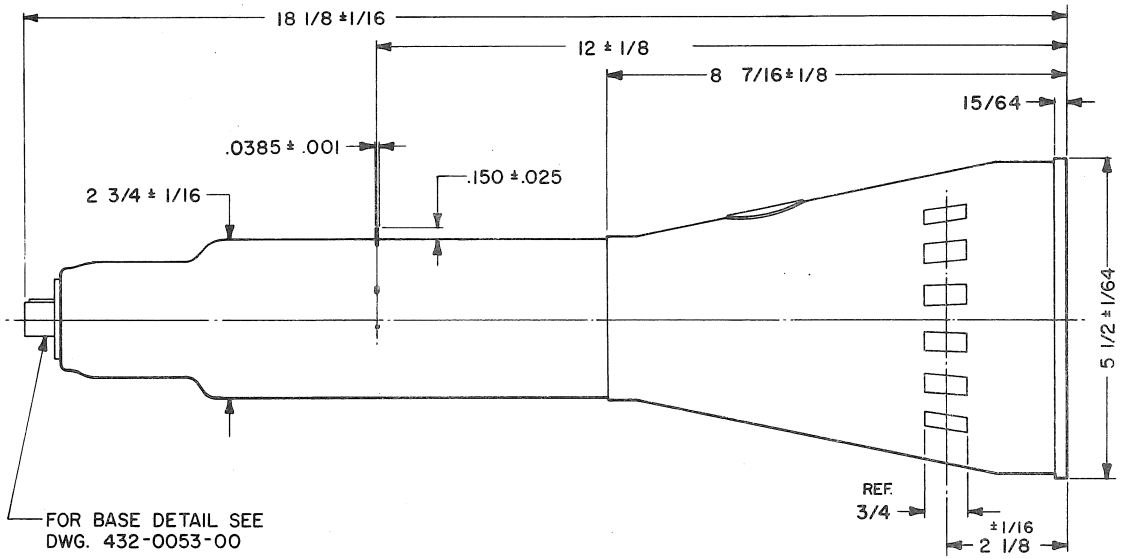

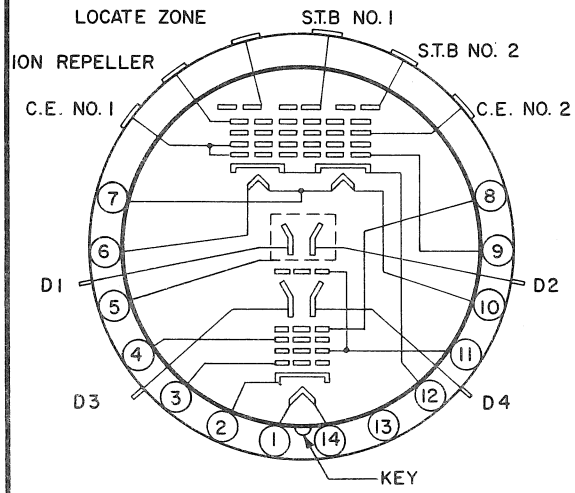

TUBE SCHEMATIC

BASE CONNECTIONS

1,14	HEATER
2	CATHODE
3	GRID NO. 1
4	FOCUSING ELECTRODE
5	D1 - D2 SHIELD
6,10	FLOOD GUN HEATER
7	FLOOD GUN HEATER CENTER TAP
8	ASTIGMATISM ELECTRODE
9	FLOOD GUN ACCELERATOR
11	ACCELERATOR
12	FLOOD GUN CATHODE
13	NOT CONNECTED

MARK	DATE	DESCRIPTION	BY	APPR

CATHODE-RAY TUBE DIVISION
TEKTRONIX, INC.
PORTLAND, OREGON, U.S.A.

TUBE TYPE: T5490

DATE: 11-29-65
MOD. A

6-1-66