INSTRUCTION MANUAL

Serial Number 2383

TYPE 2A61 DIFFERENTIAL AMPLIFIER

Tektronix, Inc.
S.W. Millikan Way ● P. O. Box 500 ● Beaverton, Oregon 97005 ● Phone 644-0161 ● Cables: Tektronix

070-0328-01

WARRANTY

All Tektronix instruments are warranted against defective materials and workmanship for one year. Tektronix transformers, manufactured in our own plant, are warranted for the life of the instrument.

Any questions with respect to the warranty mentioned above should be taken up with your Tektronix Field Engineer.

Tektronix repair and replacement-part service is geared directly to the field, therefore all requests for repairs and replacement parts should be directed to the Tektronix Field Office or representative in your area. This procedure will assure you the fastest possible service. Please include the instrument Type and Serial or Model Number with all requests for parts or service.

Specifications and price change privileges reserved.

Fig. 1-1. Type 2A61 High Sensitivity Differential Amplifier.

CONTENTS

Abbreviations and symbols used in this manual are based on, or taken directly from, IEEE Standard 260 "Standard Symbols for Units", MIL-STD-12B and other standards of the electronics industry. Change information, if any, is located at the rear of this manual.

SECTION 1

CHARACTERISTICS

General Information

The Type 2A61 is a high sensitivity differential amplifier designed for use with all Tektronix 560-series Oscilloscopes.

The amplifier provides calibrated deflection factors from 10 μV/division to 20 mV/division in a 1-2-5 sequence.

The upper and lower cutoff frequencies of the amplifier are adjustable. In addition, a line frequency notch filter can be switched in to minimize signals in the power line frequency region.

A trace restorer pushbutton returns the trace if it is driven off the CRT graticule area by a large transient.

A front panel control, the Input Selector, can connect the amplifier input to an internal common mode signal for a check of common mode rejection; ground the inputs of the amplifier for a no-signal reference display; select either Input A or B; or select A minus B.

The following characteristics apply over an ambient temperature range of 0° C to 50° C. Warm-up time to reach specified performance is 20 minutes at 25° C, ±5° C.

Characteristic	Performance Requirement	Supplemental Information
Deflection Factor	0.01 mV/div to 20 mV/div, ±5%	GAIN ADJ control properly set and VARIABLE at CALIB. Steps in 1-2-5 sequence.
VARIABLE range	≥2.5 to 1	
Maximum Bandwidth	≤0.06 Hz to ≥0.3 MHz, at 20 mV/div ≤0.1 Hz to ≥0.1 MHz, at 0.01 mV/div	
FREQ RESPONSE TO switch (High Frequency —3 dB point)	Selectable in fixed steps. Within ±30% of indicated frequency at 300-100 kHz (depending upon mV/div switch setting), 60 kHz, 6 kHz, 600 Hz and 60 Hz.	Risetime (10-90%). (Based on cutoff frequency within ±30% of front-panel frequency indication.) 60 kHz — 4.5 to 8.3 μs 6 kHz — 45 to 83 μs 600 Hz — 0.45 to 0.83 ms 60 Hz — 4.5 to 8.3 ms
FROM switch (Low Frequency —3 dB point)	Selectable in fixed steps. Within ±30% of indicated frequency at 0.06 to 0.1 Hz (depending upon mV/div switch setting), 0.6 Hz, 6 Hz, 60 Hz and 600 Hz.	Decay Time Constant (Based on cutoff frequency within ±30% of front-panel frequency indication). 600 Hz — 0.21 to 0.37 ms 60 Hz — 2.1 to 3.7 ms 6 Hz — 21.0 to 37.0 ms 0.6 Hz — 0.21 to 0.37 s
POSITION control Range	≥ ±6 divisions	
Short Circuit Noise	≤3.5 μV (RMS), referred to input, (0.01 mV/div and maximum frequency response).	≈20 μV peak to peak. Input at GND.
Grid Current	A, —B input grid current, 10 nA (nanoamperes) max.	
Input R and C	10 Megohms, ±1%, paralleled by approximately 100 pF	For each input to ground
Line Filter Attenuation at 60 Hz	≥50:1 (with 60 Hz filter)	Filters for 50 Hz and 400 Hz available (60 Hz standard)
Insertion Loss	≤15% at and above 1 kHz (with 60 Hz filter)	
Common Mode Rejection Ratio	50,000:1 below 10 kHz, 5 V peak to peak common mode sine-wave input.	MILLIVOLTS/DIV switch set to .05
Maximum Common-Mode Input Voltage	±5 V	A—B mode

Characteristic	Performance Requirement	Supplemental Information
Dynamic Range	±15 divisions minimum, about the zero-input level, with the VARIABLE control at CALIBRATED	For other settings of the VARIABLE, the dynamic range is reduced in proportion to the gain, and on-screen distortion may appear.
Differential Input DC Bias	±0.1 V maximum	May be superimposed on the AC input signal with no change in instrument performance.
Overload Recovery Time	2 minutes maximum (with ±0.1 V DC bias)	A recovery period of at least 2 minutes should be allowed after applying maximum allowable bias, before any measurement is attempted.
DC Balance	DC BAL adjustable for no trace shift with operation of MILLIVOLTS/DIV Control throughout its range	Inputs at ground

SECTION 2
OPERATING INSTRUCTIONS

Introduction

This section gives a brief description or front panel connectors, controls and signal overload indicator.

INPUT CONNECTOR — The INPUT connector is designed to mate with the low noise input cable supplied with the instrument. Pin connections are shown on the front panel.

INPUT SELECTOR — The INPUT SELECTOR is a five position rotary switch that selects the method of coupling A and B Inputs to the amplifier.

A—B: Connects the Amplifier to A and —B inputs for differential operation.

GND: Connects the Amplifier to ground without grounding A and —B Inputs.

CM: Connects the Amplifier to a common 5 volt peak to peak sine-wave at power line frequency for a common-mode rejection check.

A: Connects the + side of the Amplifier to the A Input and connects the — side of the Amplifier to ground.

—B: Connects the — side of the Amplifier to the B Input and connects the + side of the Amplifier to ground.

NOTE

A signal applied to the A Input will be displayed in the same polarity, positive upward, with the INPUT SELECTOR switch in the A position. The same signal applied to —B Input will be displayed inverted with the INPUT SELECTOR switch in the —B position.

MILLIVOLTS/DIV. — Selects calibrated deflection factors when VARIABLE is in the CALIB. position.

MILLIVOLTS/DIV. VARIABLE — Provides continuously variable deflection factor to at least 2.5 times the setting of MILLIVOLTS/DIV. switch.

CAUTION

When the VARIABLE control is in the minimum gain (fully counterclockwise) position and the POSITION control is at either end of its range, severe signal distortion may appear on the screen for certain settings of the MILLIVOLTS/DIV. control.

DC BAL. — Front panel screwdriver adjustment. Adjusts for minimum trace shift as the MILLIVOLTS/DIV. switch is rotated throughout its range.

DIFF BAL. — Front panel screwdriver adjustment. Sets optimum common-mode rejection.

LINE FREQUENCY FILTER — With FILTER switch set to IN, signals at power line frequency are attenuated approximately 34 dB. The chart, Fig. 2-1, shows —3 dB points of the Filter.

FREQ RESPONSE — FROM: (Black knob) Sets the approximate lower 3 dB down frequency limit. See Chart, Fig. 2-1.

TO: (Red knob) Sets the approximate upper 3 dB down frequency limit. See Chart, Fig. 2-1.

GAIN ADJ. — Screwdriver adjustment for changing the gain of the Type 2A61 to compensate for differences in deflection factors of different indicator units.

POSITION — Provides vertical positioning of the display. Clockwise rotation moves the trace up. Counterclockwise rotation moves the trace down.

TRACE RESTORER — The red button in the center of the POSITION knob. Returns the trace to its original position if the trace is driven off the CRT screen by signal transient or control operation. Neon indicator lights whenever the display is driven beyond the range of the POSITION control.

GENERAL OPERATING INFORMATION

Signal Connections

Whenever possible, make all signal connections to the Type 2A61 INPUT connector with the low-noise input cable supplied with the instrument. If signal connections are made to the Type 2A61 with leads other than those supplied, be sure to use shielded cable.

When making single-signal measurements be sure to establish a common ground between the chassis of the device under test and the Type 2A61. The common ground provides a reference for the voltage measurements. No ground connection is required in differential measurements, but one should be maintained as a safety measure.

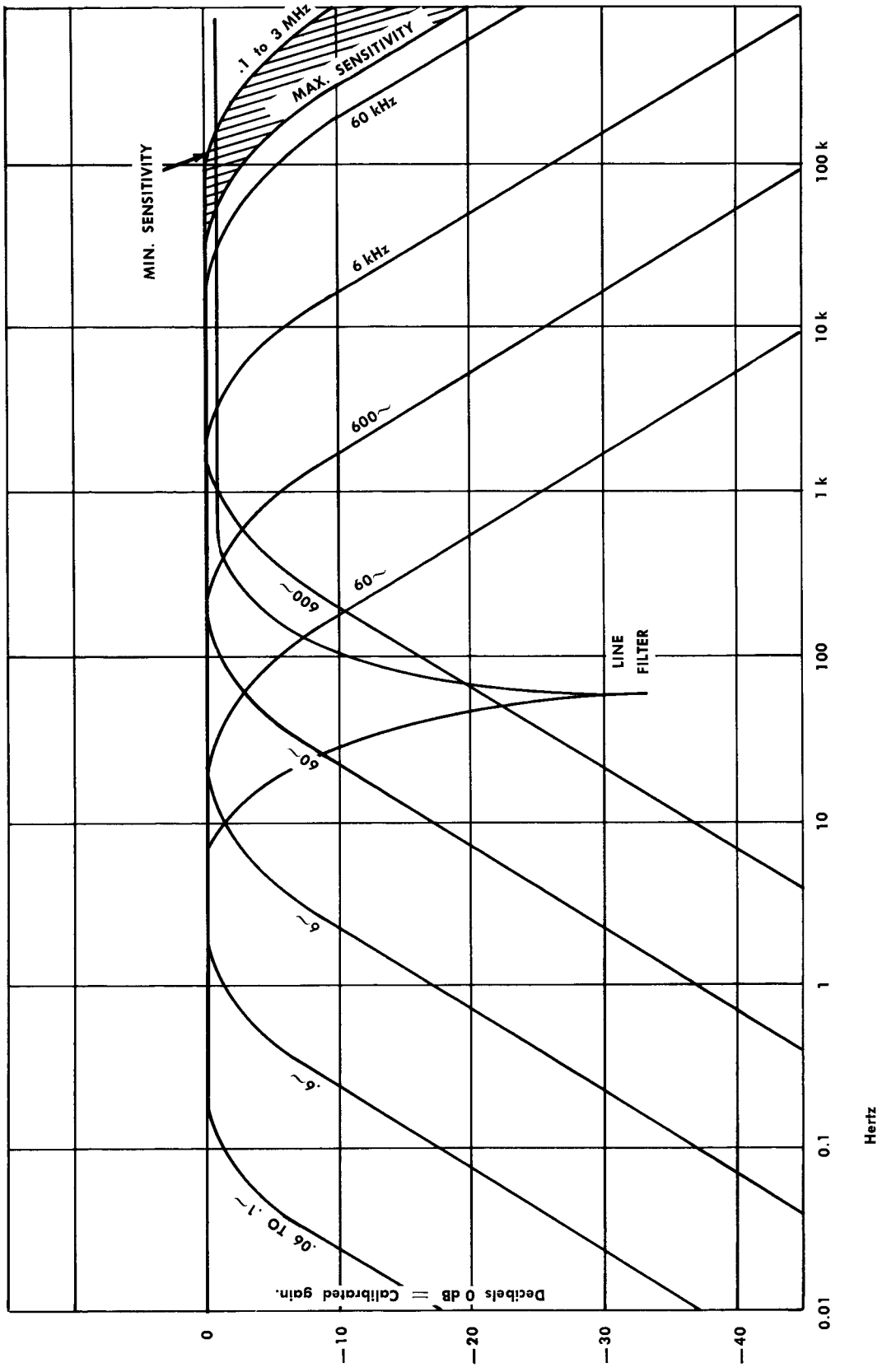

Fig. 2-1 Frequency response.

Make certain that any signal carrying leads are positioned away from stray electrostatic or AC magnetic fields that might induce voltages into the input circuit of the Type 2A61. This is important because the Type 2A61 is a low-level, high gain system in which stray signal of a millivolt or less can cause serious measurement error.

The circuits under test should operate as closely as possible to normal operating conditions. The amount of loading that the input circuit of the Type 2A61 imposes on the circuit under test must be considered. This is especially important when the circuit under test offers a high source impedance. Each input of the Type 2A61 has a resistance of 10 MΩ, ±1%, shunted by about 100 pF. Due to the capacitive component in the input circuit of the Type 2A61, loading on the circuit increases with frequency. For example, the input impedance of the Type 2A61 with an input frequency of 3 kHz is about 530 kΩ but with an input frequency of 50 kHz, input impedance decreases to about 32 kΩ.

It is important to note that shielded cable adds capacitance to the input circuit of the Type 2A61. A 42-inch length of 50 Ω coaxial cable with BNC connectors, such as Tektronix part number 012-0057-00, will add about 110 pF to the input capacitance.

Setting the GAIN ADJ Control

The GAIN ADJ control should be checked and/or adjusted each time the Type 2A61 is used with a new or different indicator unit, and occasionally during regular operation, to insure reliability of measurement.

To set the GAIN ADJ control proceed as follows:

1. Plug the Type 2A61 into the left-hand plug-in compartment of a Tektronix 560-series Oscilloscope and tighten the securing knob. Turn on the power and allow about 5 minutes for the system to reach operating temperature.

2. Free run the oscilloscope sweep at 2 ms/div and connect a suitable patch cord between the oscilloscope calibrator and the A terminal of the Type 2A61 INPUT connector. Set the oscilloscope calibrator for a 50 mV (0.05 volt) input.

3. Set the Type 2A61 front panel controls as follows:

INPUT SELECTOR	A
MILLIVOLTS/DIV	10
VARIABLE	CALIB
FREQ RESPONSE	
FROM	.06 to .1 Hz
TO	.1 to .3 MHz
FILTER	OUT

4. Check for exactly five major graticule divisions of deflection. If the deflection is not correct set the GAIN ADJ control for five major divisions. Use the Type 2A61 POSITION control as necessary to keep the display centered.

Setting the DIFF BAL Control

The DIFF BAL control (differential balance) should be set occasionally during regular operation of the TYPE 2A61, particularly prior to making critical differential measurements.

Either of two methods may be used to set the DIFF BAL control. The first of the methods to be described uses the internal 5 volt peak to peak line frequency source. The second uses an external 5 volt peak to peak signal.

To set the DIFF BAL control by the first method, proceed as follows:

Method 1

1. Plug the Type 2A61 into the left-hand plug-in compartment of a Tektronix Type 560 Series oscilloscope and tighten the securing knob. Turn on the oscilloscope power and allow about 5 minutes for the system to warm up.

2. Set the Type 2A61 front panel controls as follows:

INPUT SELECTOR	CM
MILLIVOLTS/DIV	.1
VARIABLE	CALIB
FREQ RESPONSE	FROM—.6 Hz TO—.1 MHz to .3 MHz
FILTER	OUT

3. Trigger the oscilloscope time base from the line and set the sweep rate to 10 ms/div.

4. Position the trace vertically to the graticule center line, using the Type 2A61 POSITION control and/or the Trace Restorer button. Adjust the DIFF BAL control for minimum vertical deflection. One major division of deflection with the mV/DIV switch set at .1 indicates a common mode rejection ratio of 50,000:1.

If the 1 division requirement for 50,000:1 rejection ratio cannot be met by adjusting the DIFF BAL control, the Type 2A61 should be recalibrated. See Section 6.

Method 2

1. Plug the Type 2A61 into the left-hand plug-in compartment of a 560-series Oscilloscope and tighten the securing knob. Turn on the oscilloscope power and allow 5 minutes for the system to reach operating temperature.

2. Set the Type 2A61 front panel controls as follows:

INPUT SELECTOR	A—B
MILLIVOLTS/DIV	.1
VARIABLE	CALIB
FREQ RESPONSE	
FROM	.06 Hz
TO	.1 MHz to .3 MHz
FILTER	OUT

3. Apply 5 volts peak to peak signal (preferably the signal, or a signal similar to the signal to be rejected) to the A and B INPUT terminals of the Type 2A61.

4. Set the oscilloscope time base at a sweep rate consistent with frequency of the signal applied. Set the oscilloscope triggering for a stable display. Position the trace as necessary with the Type 2A61 POSITION and/or Trace Restorer button.

5. Adjust the Type 2A61 DIFF BAL control for minimum vertical deflection. One major division of deflection with the MILLIVOLTS/DIV at .1 indicates a common mode rejection ratio of 50,000:1 with a 5 volt peak to peak signal applied.

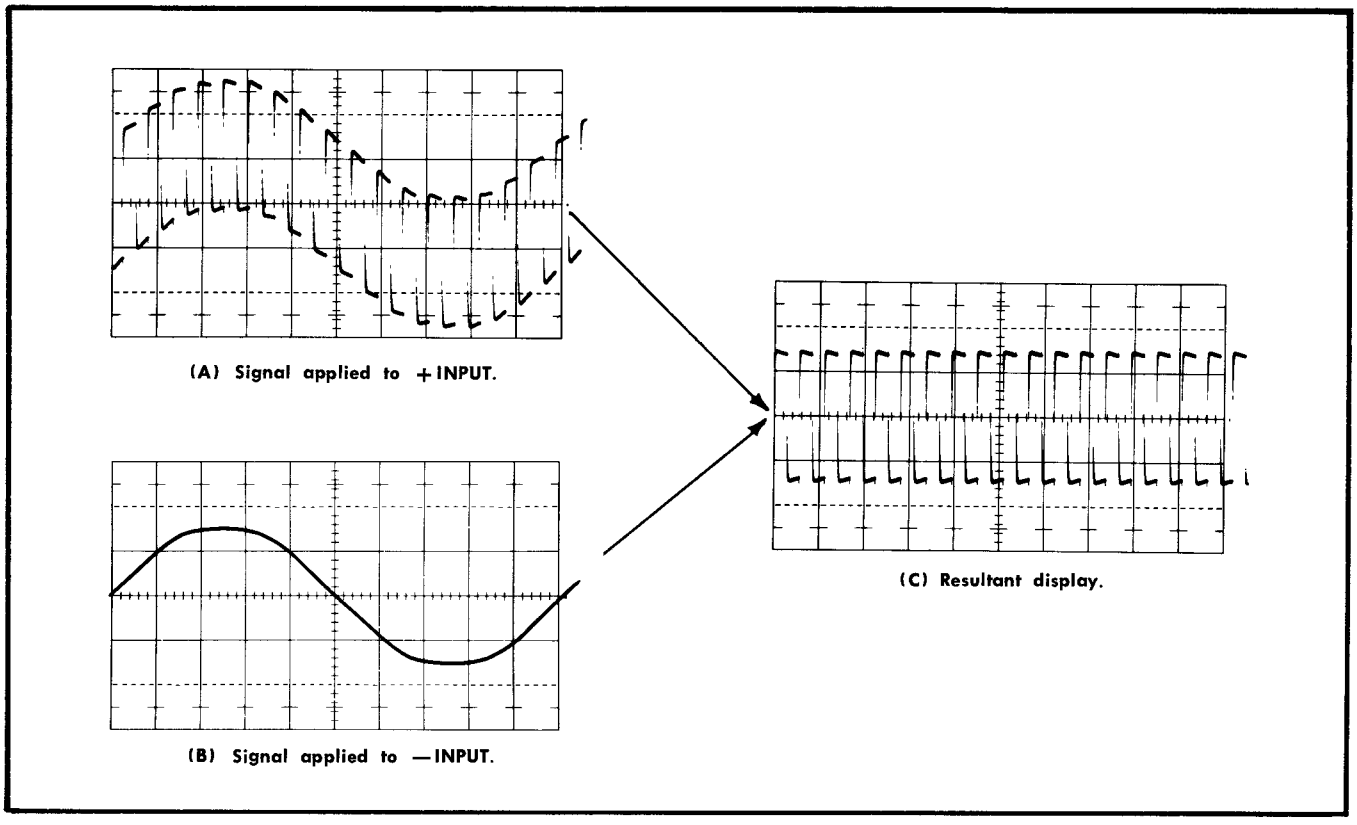

Fig. 2-2. Typical CRT displays showing differential rejection of common mode signal. Resultant waveform (C) displays the difference in signals A and B.

Setting the DC BAL Control

The DC BAL control may need to be set occasionally during regular operation of the Type 2A61. Proper DC balance minimizes trace shift when rotating the MILLIVOLTS/DIV switch from one position to another.

To set the DC BAL control, proceed as follows:

1. Plug the Type 2A61 into the left-hand plug-in compartment of a Tektronix 560-series Oscilloscope and tighten the securing knob. Turn the oscilloscope power on and allow about 5 minutes for the system to reach operating temperature.

2. Free run the oscilloscope time base at a sweep rate of 2 ms/div.

3. Set the Type 2A61 front panel controls as follows:

INPUT SELECTOR	GND
MILLIVOLTS/DIV	.5
VARIABLE	CALIB
FREQ RESPONSE	
FROM	60 Hz
TO	60 Hz
FILTER	OUT

4. Vertically position the trace to the CRT graticule center line using the Type 2A61 POSITION control.

5. Reset the MILLIVOLTS/DIV switch to .01.

6. Adjust the DC BAL control to return the trace to the graticule center line.

7. Reset the MILLIVOLTS/DIV switch to .5 and repeat steps 4, 5 and 6 until there is no trace shift while rotating the MILLIVOLTS/DIV switch between .5 and .01.

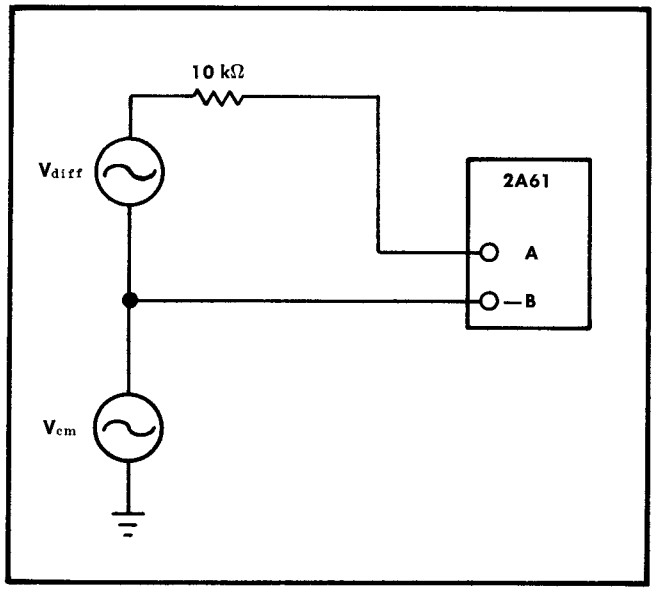

Fig. 2-3. Example of a measurement situation in which CMRR is only 1000:1.

Differential Voltage Measurements

Differential voltage measurements are made with the INPUT SELECTOR switch set to A—B and the signals applied to the A and B terminals of the INPUT connector. Under this condition, only the voltage difference of the two signals is amplified and displayed on the CRT. Common mode signals (signals that are common in amplitude, frequency and phase) are rejected and not displayed (see Fig. 2-2). Maximum common-mode rejection occurs when the MILLIVOLTS/DIV switch is in the higher sensitivity settings (.5 through .01 positions).

Before making critical differential voltage measurements, be sure to check the adjustment of the DIFF BAL control as described under Setting the DIFF BAL Control with a signal as nearly identical as possible in frequency and wave shape to the signal you wish to reject.

Severe distortion may result from exceeding the maximum input voltage ratings of the Type 2A61.

In differential measurements, the impedance of the signal source is of primary importance in determining the resultant Common Mode Rejection Ratio. The source impedance and input impedance of the Type 2A61 form voltage dividers which, if unbalanced, will cause loss of Common Mode Rejection Ratio. For instance, with a measurement situation such as that of Fig. 2-3, the Common Mode Rejection Ratio with respect to VCM is only 1000:1.

Frequency Response

Upper and lower frequency limits of the Type 2A61 are variable with the FREQ RESPONSE controls. This feature is useful in improving the signal to noise ratio of the display (see Fig. 2-4). However, if the FREQ RESPONSE controls are not properly set, attenuation or distortion of the signal of interest may result. A square wave, for example, contains a wide range of frequency components. The effect of the FREQ RESPONSE controls may appear to be more pronounced on a square wave than with sinsoidal signals. The chart of Fig. 2-1 gives the effect of the FREQ RESPONSE controls at various frequencies.

The line frequency filter provides selective attenuation to signals at or near the line frequency. The FILTER switch should be used with the same precaution as the FREQ RESPONSE controls. When the FILTER switch is set to IN, avoid the tendency to apply too large a line frequency signal to the INPUT of the Type 2A61. Maximum applied voltages for the Type 2A61 are given in Section 1, Characteristics, and are applicable regardless of the setting of the FILTER switch.

Applications

The Type 2A61 is suitable for practically any application that requires measurement of low level AC signals. The high input sensitivity and isolation from ground allows direct display of electroencephalographic or electrocardiographic impulses or input-output information relayed through a nervous system.

The Type 2A61 is also suitable for direct measurement of outputs from dynamic strain measurement systems. It will display outputs from resistive, inductive or capacitive bridges. Inputs from two bridges (one applied to A input and the other to B input) will allow measurement of strain at either of two points or the differential strain between two points.

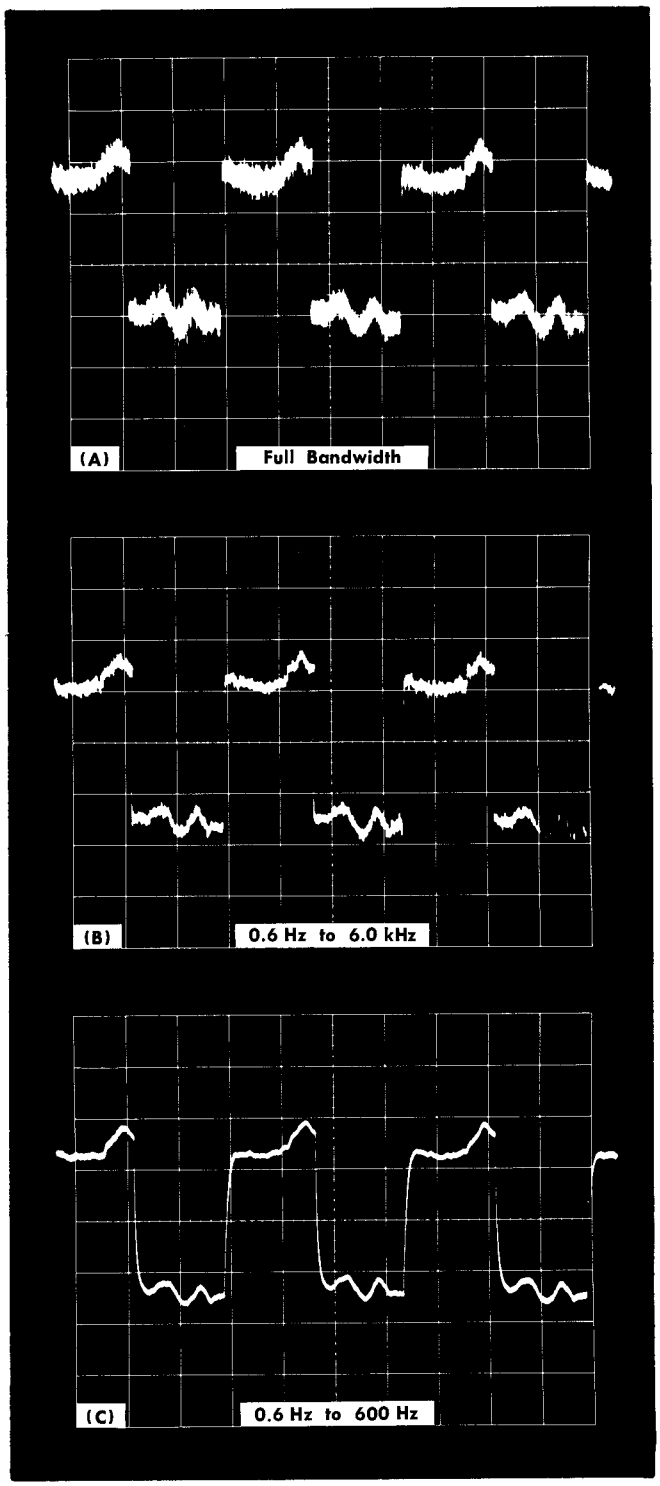

Fig. 2-4. Typical CRT display showing improvement of signal to noise through use of the FREQ RESPONSE controls.

If your application contains DC common-mode voltage higher than the ±5 volt maximum, or DC difference levels greater than 100 mV, use blocking capacitors in series with the inputs of the Type 2A61. If the dynamic signal amplitude is large, a simple resistance divider may be needed to bring the signal to a suitable level for measurement. However, when using such dividers, the loading of the source by the divider(s), the loading of the divider(s) by the Type 2A61 input resistance and capacitance, the amplitude error introduced by inaccuracies in the divider components and the noise generated by the divider(s) should all be taken into account. Additionally, when using two such dividers in a differential application, the resultant Common Mode Rejection Ratio depends on how accurately the dividers are matched over the frequency range of interest.

SECTION 3

CIRCUIT DESCRIPTION

Introduction

This section of the manual contain an electrical description of each circuit in the Type 2A61.

Complete schematic diagrams are given in the Diagrams section. These diagrams should be refered to for electrical values and relationships.

INPUT AMPLIFIER

Input Selector

Input signals are fed from the Input connector J401, to cathode coupled amplifier tubes V424, V425 and V524, V525. In the A position of the Input Selector switch the grids of V424, V425 are connected to the A Input connector and the grids of V524, V525 are connected to ground.

When switch SW401 is in the —B position, the grids of V424, and V425 are grounded and —B Input is connected to to grids of V524 and V525. The circuit operation is identical to that in the A switch positian except that the output signal is inverted and the input signal is connected to the B input tubes.

In the A—B setting of the Input Selector switch, SW401, both grids are connected to the Input Connector: A Input to V424, V425 and B Input to V524, V525.

In the CM setting of the Input Selector switch, SW401, both grids are connected to the junction of R402, R403. This divider provides 5 volts, 60 Hz[1] to both grids for checking low frequency common mode rejection.

In the GND setting of the Input Selector switch, SW401, both grids are connected to ground. The signal is not grounded in this switch position.

First Stage

The first stage uses parallel Nuvistors V424, V425 and V524, V525 to reduce noise in the Input Stage.

A constant current cathode supply, Q508, provides current for the input nuvistors.

The constant current supply functions as follows: Zener diode D509 sets the voltage at one end of R508 at —75 volts. The other end or R508 is set at approximately —11.6 volts by the —12.2 volts on Q508 base. As the voltage is fixed at both ends of R508, the current through R508 must be constant. This current is the only source for the cathodes of the Input nuvistors. Input tube current is therefore a function of current through R508 rather than collector voltage or impedance.

With the total cathode current fixed, any signal which causes V424, V425 current to increase will cause V524, V525 current to decrease by an equal amount. The tranfer of current will cause Q433 and Q533 to receive balanced drive.

R501, INT BAL control, adjusts the cathode circuit resistances on the two sides to correct for differences in tube bias characteristics (tube replacement, aging and other Input Amplifiers circuit unbalances).

Second Stage

The second stage consists of Q433 and Q533, emitter followers with a common voltage-dropping collector resistor.

Compensating capacitors C424 and C524 balance the impedance characteristics of the two sides of the stage.

R515, DIFF BAL, sets the low frequency common-mode rejection of the circuit.

Third Stage

The third stage consists of Q434 and Q534, collector loaded amplifiers with emitter degeneration to set gain.

R440 is the emitter feedback resistor that determines the gain of the Type 2A61 through mV/DIV switch position .5 through 20.

R438, 20 mV GAIN, is the fine gain adjustment in series with R440. R438 is used to set the emitter resistance of the stage, and thus insure correct gain tracking as R440 is switched.

Common Mode Rejection System

The input tubes are operated at constant current (ensured by the constant current source, Q508) and also by the constant plate voltage (by bootstrapping the effective plate supply to the mean cathode voltage) in order to improve the common mode dynamic range over which good rejection is maintained, and to reduce the dependence of common mode rejection upon dynamic tube characteristics.

If small identical signals are applied to both inputs (common mode), both sides of the input stage attempt to change currents in the same direction. Since the total cathode current cannot change, no signal current appears in the plate circuits of the input tubes.

The only output that can appear in the plate circuit of the input tubes results from applying a differential signal that allows the balance of current through the tubes to shift.

The plate load resistors R424 and R524 for V424 and V524 are driven from the output of the "unity gain" bootstrap amplifier consisting of Q504 and Q514 and associated components. The input to this amplifier is taken from the center arm of R501, which represents the mean cathode voltage. Since the tube current is constant, no common mode signals

[1]For instruments using 60 Hz power line frequency.

appear across R424 and R524, so the mean plate-to-cathode voltage is constant.

The gain of the bootstrap amplifer Q504 and Q514 is determined in part by the voltage divider action of the impedance of D516 and the load resistor R431. The loss of gain due to the divider action may be offset by increasing the gain of the basic amplifier. This gain adjustment, R502, sets the overall gain of the bootstrap amplifier at 1.

For high frequencies, the Zener impedance and compensating gain adjustment are bypassed by C516, ensuring unity gain.

The voltage changes at the terminals of C437 are identical so the capacitor C437 and resistor R440 float with the voltage changes.

In differential operation C437 acts as a short circuit to the signal allowing signal amplification to be determined by the value of the degeneration resistor, R440.

FILTERS

Frequency Response Filter

Two sections of filtering are provided to attenuate unwanted signals.

C443, C543, A through E, together with R450 and R550 comprise the FROM section of the Frequency Response Filter and set the low frequency response.

C445, A through D, together with R435 and R535 comprise the TO section of the Frequency Response Filter and set the high frequency response.

Power Line Frequency Filter

The power line frequency filter, consisting of R452, C452, R453, C453, R552, C552, R553 and C553 may be switched into the circuit with the FILTER switch on the front panel. Signals arrive at each output terminal via two paths; the direct path, R452-C452 (R552-C552), and the crossover path, R553-C553 (R453-C453) which is driven from a source 180° out of phase with the direct path source. These signals tend to cancel and at one frequency the cancellation can be made almost complete. Maximum rejection is at 60[2] Hz with attenuation greater than 50:1.

OUTPUT AMPLIFIER

Trace Restoration

The high system sensitivity may cause large transients resulting from swich operation or input signals to drive the trace off the CRT. The large time constant in the low frequency filter will then cause a long time delay before the trace returns. Depressing the push button switch SW450, concentric with the POSITION control, will bleed off the capacitor charge and quickly return the trace to the CRT.

First Section

The first section of the Output Amplifier is a two stage feedback amplifier consisting of V464, Q474 and Q574. Its gain is set by R476, R576 and switched resistor R470 which controls the gain of the Type 2A61 from .01 millivolts/div through .2 millivolts/div. The .01 millivolt GAIN control R579, in parallel with R470, compensates for "less than infinite" loop gain in the amplifier and acts as a gain tracking adjustment for R470.

The triode section of V484 and its shunt resistor R459 form a simple series voltage regulator which supplies the first section of the output amplifier.

The output signal of the first section may be attenuated by the two section VARIABLE control R482A and B which is used in a balanced voltage divider connection.

The DC BAL adjustment, R465, compensates for differences in the grid bias of V464A and B, and ensures that no trace shift occurs when R470 is switched or when the VARIABLE control is operated.

Second Section

Output from the Variable Gain control is fed to the grids of V484A and V584A, a cathode coupled plate loaded configuration.

The cathodes of V484A and V584A are coupled together through R585 and Gain Adjust control R485, a cathode degeneration control.

R485 sets the overall gain of the Type 2A61, and is adjusted to match the Type 2A61 output to the deflection factor of the CRT in the 560-series Indicator Oscilloscopes.

The cathode current of V484A and V584A is through R489 and the POSITION control, R488. R488 can vary the quiescent current of V484A and V584A to position the trace vertically on the CRT.

V484A and V584A are coupled through pins 17 and 21 of the interconnecting socket to the CRT vertical deflection plates. L484 and L584 are shunt peaking inductances in the plate circuits of V484A and V584A. Ferrite cores L483 and L583 in the plate leads of the output tubes are parasitic suppressors.

Trace Position Indicator

The DC balance of the output stage is sensed by Q494. The cathode with the higher voltage drives Q494 through either D491 or D591. The emitter of Q494 is returned to a divider which stays at the average voltage of both cathodes. When the trace is beyond the position control range, the DC unbalance is sufficient to drive Q494 and light the neon lamp, B494.

Trigger Amplifier

The trigger amplifier, V584B, is driven from the output of V584A through voltage divider R586, R587 and R588. R588, INT TRIG DC LEVEL, sets the division ratio so that the output of V584B is zero when the trace is centered vertically on the CRT. V584B is a cathode follower that isolates the output of V584A from the trigger circuits. The trigger signal is coupled through pin 11 of the interconnecting socket to the time base unit.

[2]Also available at 50 Hz and 400 Hz.

SECTION 4
MAINTENANCE

Introduction

This section of the manual contains information for use in preventive maintenance, corrective maintenance or troubleshooting of the Type 2A61.

PREVENTIVE MAINTENANCE

General

Preventive maintenance consists of cleaning, visual inspection, lubrication, etc. Preventive maintenance performed on a regular basis will help prevent instrument failure and will improve reliability of this instrument. The severity of the environment to which the Type 2A61 is subjected will determine the frequency of maintenance.

Cleaning

The Type 2A61 should be cleaned as often as operating conditions require. Accumulation of dirt in the instrument can cause overheating and component breakdown. Dirt on components acts as an insulating blanket and prevents efficient heat dissipation. It also provides an electrical conduction path.

The top and bottom covers of the indicating instrument into which the Type 2A61 is plugged provide protection against dust in the interior of the instrument. Operation without these covers in place will require more frequent cleaning.

CAUTION

Avoid the use of chemical cleaning agents which might damage the plastics used in this instrument. Some chemicals to avoid are benzene, toluene, xylene, acetone and similar solvents.

Interior

Dust in the interior of the instrument should be removed occasionally due to its electrical conductivity under high humidity conditions. The best way to clean the interior is to blow off the accumulated dust with dry, low velocity air. Remove any dirt which remains with a soft paint brush or a cloth dampened with a mild detergent and water solution. A cotton tipped applicator is useful for cleaning in narrow spaces or for cleaning ceramic terminal strips.

Exterior

Loose dust accumulated on the outside of the Type 2A61 can be removed with a soft cloth or small paint brush. The paint brush is particularly useful for dislodging dirt on and around the front panel controls. Dirt which remains can be removed with a soft cloth damped in a mild solution of water and detergent. Abrasive cleaners should not be used.

Lubrication

The reliability of potentiometers, rotary switches and other moving parts can be increased if they are kept properly lubricated. Use a cleaning type lubricant (such as Tektronix Part No. 006-0218-00) on shaft bearings and switch contacts. Lubricate switch detents with a heavier grease (such as Tektronix Part No. 006-0219-00). Potentiometers should be lubricated with a lubricant that will not affect electrical characteristics (such as Tektronix Part No. 006-0220-00). Do not over-lubricate. A lubrication kit containing the necessary lubricants and instructions is available from Tektronix, Inc. Order Tektronx Part No. 003-0342-00.

Visual Inspection

The Type 2A61 should be inspected occasionally for such defects as broken connections, broken or damaged ceramic strips, improperly seated transistors or nuvistors and heat damaged parts.

The remedy for most visible defects is obvious; however, care must be taken if heat damaged parts are located. Overheating is usually only a symptom of trouble. For this reason it is essential to determine the actual cause of overheating before the heat damaged part is replaced, otherwise the damage may be repeated.

Transistor and Nuvistor Checks

Periodic checks of the transistors and nuvistors in the Type 2A61 are not recommended. The best check of transistor or nuvistor performance is its actual operation in the instrument. More details on checking transistor and nuvistor operation is given under Troubleshooting.

Recalibration

To assure accurate measurement, check the calibration of this instrument after 500 hours of operation or every six months if used infrequently. Complete instructions are given in the Calibration section.

The calibration procedure can also be helpful in localizing certain troubles in the instrument. In some cases minor troubles, not apparent during normal use, may be revealed and/or corrected by recalibration.

CORRECTIVE MAINTENANCE

General

Corrective maintenance consists of component replacement and instrument repair. Special techniques or procedures required to replace components in this instrument are described here.

Obtaining Replacement Parts

Standard Parts. All electrical and mechanical parts replacement for the Type 2A61 can be obtained through your local Tektronix Field Office or representative. However, many of the standard electronic components can be obtained locally in less time than is required to order them from Tektronix, Inc. Before purchasing or ordering replacement parts, consult the Parts List for value, tolerance and rating.

NOTE

When selecting replacement parts, it is important to remember that the physical size and shape of a component may affect its performane at high frequencies. All replacement parts should be direct replacements unless it is known that a different component will not adversely affect instrument performance.

Special Parts. In addition to the standard electronic components, some special parts are used in the Type 2A61. These parts are manufactured or selected by Tektronix, Inc. to meet specific performance requirements, or are manufactured for Tektronix, Inc. in accordance with our specifications. These special parts are indicated in the Parts List by an asterisk preceding the part number. Most of the mechanical parts used in this instrument have been manufactured by Tektronix, Inc. Order all special parts directly from your Tektronix Field Office or representative.

Ordering Parts. When ordering replacement parts from Tektronix, include the following information:

1. Instrument Type.

2. A description of the part (if electrical, include the circuit number).

3. Tektronix Part Number.

4. Instrument Serial Number.

Soldering Techniques

WARNING

Disconnect the instrument from the power source before soldering.

Ceramic Terminal Strips. Solder used on the ceramic terminal strips should contain about 3% silver. Ordinary tin-lead solder can be used occasionally without damage to the ceramic terminal strips. Use a 40 to 75 watt soldering iron with a 1/8 inch wide chisel-shaped tip. If ordinary solder is used repeatedly, or if excessive heat is applied, the solder to ceramic bond may be broken. Silver solder should be available locally, or it can be purchased directly from Tektronix, Inc.; order by Tektronix Part No. 251-0514-00.

Observe the following precautions when soldering ceramic terminal strips:

1. Use a hot iron for a short time. Apply only enough heat to make the solder flow freely.

2. Maintain a clean, properly tinned tip.

3. Avoid putting pressure on the ceramic terminal strip.

4. Do not attempt to fill the terminal strip notch with solder; use only enough solder to cover the wires adequately.

5. Clean the flux from the terminal strip with a flux remover solvent to maintain good enviromental characteristics.

Metal Terminals. When soldering metal terminals (e.g., switch terminals, potentiometers, etc), ordinary 60/40 solder can be used. The soldering iron should have a 40 to 75 watt rating with a 1/8 inch wide chisel-shaped tip.

Observe the following precautions when soldering metal terminals:

1. Apply only enough heat to make the solder flow freely.

2. Apply only enough solder to form a solid connection. Excess solder may impair the function of the part.

3. If a wire extends beyond the solder joint, clip off the excess.

4. Clean the flux from the solder joint with flux remover solvent to maintain good environmental characteristics.

Component Replacement

WARNING

Disconnect the instrument from the power source before replacing components.

Ceramic Terminals Strip Replacement. A complete ceramic terminal strip assembly is shown in Fig. 4-1. Replacement strips (including studs) and spacers are supplied under separate numbers. The old spacers may be re-used if they are not damaged.

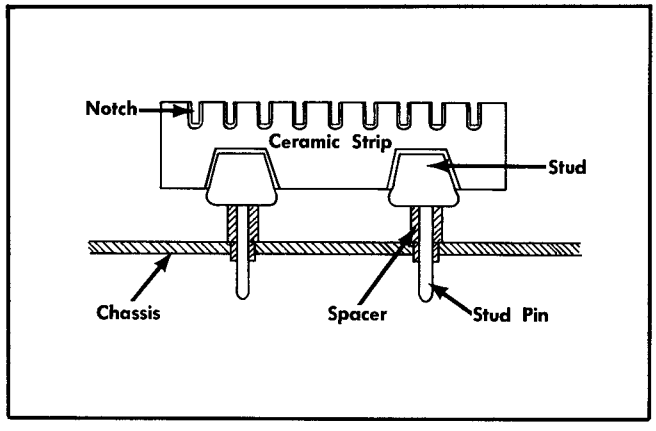

Fig. 4-1. Ceramic terminal strip assembly.

To replace a ceramic terminal strip, first unsolder all connections. Then the damaged strip can be pried or pulled loose from the chassis. If the spacers come out with the strip, remove them from the stud pins to be used for installation of the new strip.

After the damaged strip has been removed, place the undamaged spacers in the chassis holes. Then, carefully press the studs into the spacers until completely seated. If necessary, use a soft mallet and tap lightly, directly over the stud area of the strip.

Transistor and Nuvistor Replacement

Transistors and nuvistors should not be replaced unless actually defective. If removed during routine maintenance return them to their original sockets. Unnecessary replacement of transistors or nuvistors may affect the calibration of this instrument. When transistors or nuvistors are replaced, check the operation of that part of the circuit which may be affected.

Replacement transistors or nuvistors should be of the original type or a direct replacement. The transistors should be remounted in the same manner as the original.

Rotary Switches. Individual wafers or mechanical parts of rotary switches are normally not replaced. If a switch is defective, replace the entire assembly. Replacement switches can be ordered either wired or unwired: refer to the Parts List for the applicable part numbers.

When replacing a switch, it is recommended that the leads and switch terminals be tagged with corresponding identification tags as the leads are disconnected. Then use the old switch as a guide for installing the new one. An alternate method is to draw a sketch of the switch layout and record the wire color to each terminal.

TROUBLESHOOTING

Introduction

The following information is provided to facilitate troubleshooting the Type 2A61. Information contained in other sections of this manual should be used along with the following information to aid in locating the defective components.

Troubleshooting Aids

Diagrams. Circuit diagrams are given on foldout pages in Section 9. The circuit number and electrical value of each component in this instrument are shown on the diagram. Important voltages and waveforms are also shown on the diagram.

Switch Wafer Identification. Switch wafers shown on the diagrams are coded to indicate the position of the wafer in the complete switch assembly. The numbered portion of the code refers to the wafer number counting from the front, or mounting end of the switch, toward the rear. The letters F and R indicate whether the front or rear of the wafer performs the particular switching function. For example, a wafer designated 2R indicates that the rear of the second wafer is used for this particular switching function.

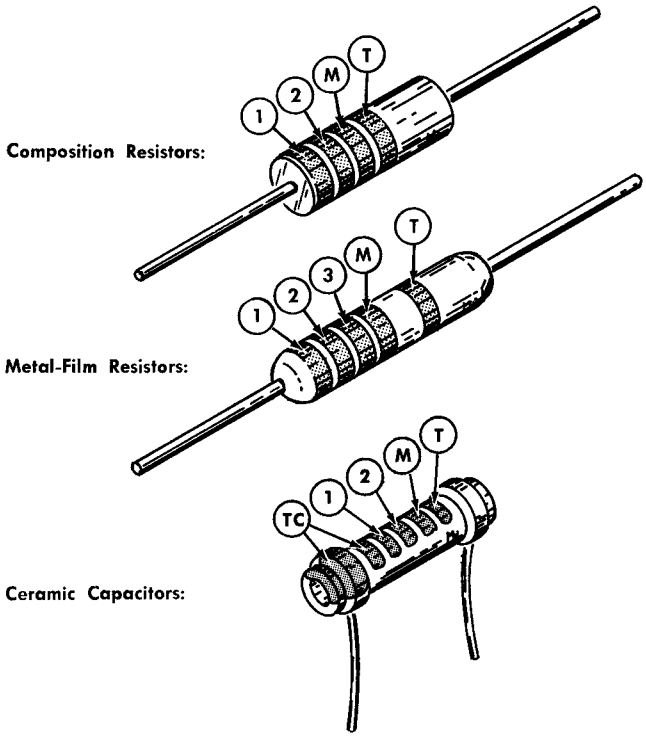

1 2 and 3 —1st, 2nd and 3rd significant figures;
M —multiplier; T —tolerance;
TC —temperature coefficient.

Resistor and Capacitor Color Code

Color	Significant Figures	Multiplier: Resistors	Multiplier: Capacitors	Tolerance: Resistors	Tolerance: Capacitors
Silver	---	10^{-2}	---	±10%	---
Gold	---	10^{-1}	---	±5%	---
Black	0	1	1	---	±20% or 2 pF*
Brown	1	10	10	±1%	±1% or 0.1 pF*
Red	2	10^{2}	10^{2}	±2%	±2%
Orange	3	10^{3}	10^{3}	±3%	±3%
Yellow	4	10^{4}	10^{4}	±4%	+100% —0%
Green	5	10^{5}	10^{5}	±0.5%	±5% or 0.5 pF*
Blue	6	10^{6}	10^{6}	---	---
Violet	7	---	---	---	---
Gray	8	---	10^{-2}	---	+80% —20% or 0.25 pF*
White	9	---	10^{-1}	---	±10% or 1 pF*
(none)	---	---	---	±20%	±10% or 1 pF*

*For capacitance of 10 pF or less.

NOTE: T and/or TC color code for capacitors depends upon manufacturer and capacitor type. May not be present in some cases.

Fig. 4-2. Resistor and ceramic capacitor color code.

Wiring Color Code. All insulated wire used in the Type 2A61 is color-coded according to the EIA standard color code (as used for resistors) to facilitate circuit tracing. The widest color stripe identifies the first color of the code. Power supply voltages can be identified by three color stripes and the following background color code: white, positive voltage; tan, negative voltage. Table 4-1 shows the wiring color code for the power supply voltages used in the Type 2A61. The remainder of the wiring in the Type 2A61 is color coded with two or less stripes or has a solid background with no stripes. The color coding helps to trace a wire from one point in the instrument to another.

TABLE 4-1

Supply	Background Color	1st Stripe	2nd Stripe	3rd Stripe
—100	Tan	Brown	Black	Brown
—12.2	Tan	Brown	Red	Black
+125	White	Brown	Red	Brown
+300	White	Orange	Brown	Brown
6.3 VAC	White	Blue	Brown	

Resistor Color Code. A number of precision metal film resistors are used in this instrument. These resistors can be identified by their gray body color. If a metal film resistor has a value indicated by three significant figures and a multiplier, it will be color coded according to the EIA standard resistor color code. If it has a value indicated by four significant figures and a multiplier, the value will be printed on the body of the resistor. For example, a 333 kΩ resistor will be color coded, but a 333.5 kΩ resistor will have its value printed on the resistor body. The color code sequence is shown in Fig. 4-2.

Composition resistors are color coded according to the EIA standard resistor color code.

Capacitor Marking. The capacitance values of common disc capacitors and small electrolytics are marked in microfarads on the side of the component body. The white ceramic capacitors used in the Type 2A61 are color coded in picofarads using a modified EIA code (see Fig. 4-2).

Troubleshooting Techniques

This troubleshooting procedure is arranged in an order which checks the simple trouble possibilities before proceeding with extensive troubleshooting. The first few checks assure proper connections, operation and calibration. If the trouble is not located by these checks, the remaining steps aid in locating the defective component. When the defective component is located, it should be replaced following the replacement procedure given in this section.

1. Check the Associated equipment. Before proceeding with troubleshooting of the Type 2A61, check that the equipment used with it is operating correctly. Check that the signal is properly connected and that the interconnecting cables or probes are not defective.

2. Check Control Settings. Incorrect settings of the controls on the Time Base Plug-in, the 560 Series Indicator or the Type 2A61 can indicate a trouble that does not exist. For example, an incorrect setting of the Time/div Variable control on the Time Base Plug-in will give erroneous risetime measurements; incorrect settings of the mV/div and/or Variable appears as incorrect gain; incorrect setting of the triggering controls on the Time Base Plug-in might appear to be defective trigger pickoff, etc.

If there is any question about the operation or correct function of any control, consult the Operating Instructions section of the manual for the instrument involved.

3. Check Instrument Calibration. Check the calibration of the instrument or the affected circuit if the trouble exists in one circuit. The indicated trouble may only be a result of misadjustment or may be corrected by calibration. Complete instructions are given in the Calibration section of this manual. Individual calibration steps can be performed out of sequence. However, if the circuit affects the calibration of other circuits in the instrument, a more complete calibration will be necessary. General Information in the Calibration section describes how steps which interact are noted.

4. Visual Check. Visually check the circuit in which the trouble is located. Many troubles can be located by visual indications such as unsoldered connections, broken wires or damaged components.

5. Check Resistances to Ground. Check the resistance to ground on each of the pins on the Amphenol 24 pin connector, Fig. 4-3. Table 4-2 shows pin numbers, approximate resistance which should be seen and the use of each pin.

TABLE 4-2

Pin No.	Approx Resistance	Use
1	1 Ω	6.3 volts, AC
2	0	6.3 volts, AC
3,4	Inf	Unused
5	0	Ground
6,7,8	Inf	Unused
9	0	Ground
10	50 kΩ	+300 volts
11	40 kΩ	Trigger Out
12	Inf	Unused
13,14,15	30 kΩ	+125 volts
16	4 Ω	—12.2 volts
17	50 kΩ	Output
18,19,20	Inf	Unused
21	50 kΩ	Output
22	1 kΩ	—100 volts (unreg)
23	10 kΩ	—100 volts (reg)
24	0	Gnd

NOTE

The DC resistance of any circuit is dependent on several factors. Therefore, the resistances in the table are approximations and not to be considered absolute values.

6. Check Voltages and Waveforms. Often the defective component can be located by checking for the correct voltage or waveform in the circuit. Typical voltages are given on the Schematic Diagrams. To check waveforms apply a signal to the input and trace the signal through the amplifiers. Any waveform distortion or loss of signal is an indication of the location of the trouble.

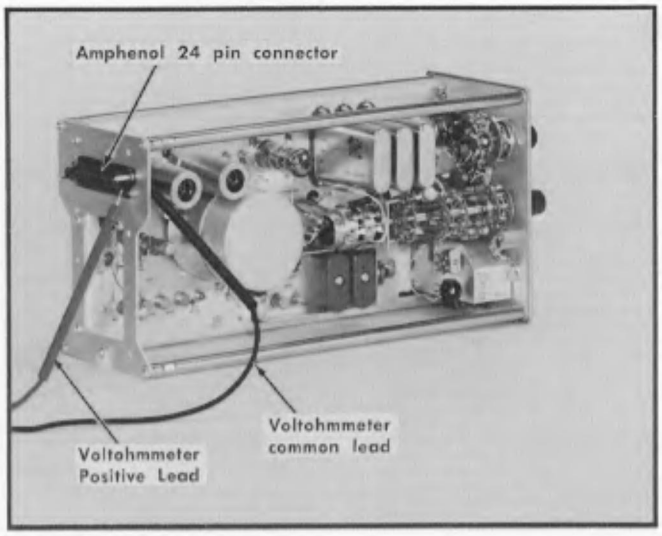

Fig. 4-3. Location of 24 pin Amphenol connector.

NOTE

Voltages given on the diagrams are not absolute and may vary slightly between instruments. To obtain operating conditions similar to those used to take these readings, see instructions (in blue) on the schematic.

a. Voltages. Voltage measurements should be made with a 20,000 ohms/volt DC voltmeter. Accuracy of the voltmeter should be within 3% on all ranges. Be sure that the test prods are well insulated to prevent accidental shorting of components.

b. Waveforms. Use a test oscilloscope that provides minimum loading of the circuit under test. For example, an input resistance of approximately 10 megohms paralleled by about 10 pF is obtained when using a 10× probe. The test oscilloscope should have a minimum deflection factor of 5 mV/div.

7. Check Individual Components. The following procedures describe methods of checking individual components in the Type 2A61. Components that are soldered into place can be checked most easily by disconnecting one end. This eliminates incorrect measurement due to the effect of surrounding circuitry.

a. Transistors and Nuvistors. The best check of transistor and nuvistor operation is actual performance under operating conditions. If a transistor or nuvistor is suspected of being defective, it can best be checked by substituting a new component or one which has been checked previously. However, be sure that the circuit conditions are not such that a replacement transistor or nuvistor might also be damaged. If substitute transistors or nuvistors are not available a dynamic tester may be used (such as a Tektronix Type 570 or 575). Static type testers are not recommended since they do not check operation under simulated operating conditions. Nuvistors should be replaced only in matched sets of four. Tektronix part number for the matched set may be found in the Electrical Parts List, Section 7.

b. Diodes. A diode can be checked for an open or shorted condition by measuring the resistance between terminals. With an ohmmeter scale having an internal source of about 1.5 volts, the resistance should be very high in one direction and very low when the leads are reversed.

CAUTION

Use an ohmmeter scale that has an internal current less than 20 mA. High currents may damage the diode.

c. Resistors. Resistors can be checked with an ohmmeter. Check the Electrical Parts List for the tolerance of the resistors used in this instrument. Resistors normally do not need to be replaced unless the measured value varies widely from the specified value.

d. Inductors. Check for open inductors by checking continuity with an ohmmeter. Shorted or partially shorted inductors can usually be found by checking the waveform response when high frequency signals are passed through the circuit. Partial shorting often reduces high frequency response (rise time).

e. Capacitors. A leaky or shorted capacitor can best be detected by checking resistance with an ohmmeter on the highest scale. Do not exceed the voltage rating of the capacitor. The resistance reading should be high after an initial charge of the capacitor. An open capacitor can best be detected with a capacitance meter or by checking whether the capacitor passes AC signals.

8. Isolate the trouble to a section of the Amplifier. Since most troubles that may occur in the Type 2A61 will cause an unbalance, the following procedure is recommended to isolate trouble to a section.

a. Short circuit (do not ground) the CRT Vertical Deflection Plate pins on the 560-series Oscilloscope and note the position of the trace vertically. This is the electrical center of the CRT.

b. Remove the short circuit from the CRT Vertical Deflection Plate pins.

c. Adjust the Type 2A61 POSITION control to set the trace to the CRT electrical center observed in step a.

d. Connect V484A and V584A grids (pin 7) together with a short clip lead. (If the clip lead causes oscillation in the circuit, loop a couple of turns of the clip lead through a ferrite bead.) Note the position of the trace vertically. The trace should be at the CRT electrical center. If the trace is not centered, trouble is indicated in V484, V584 or in the connected circuitry.

e. If no trouble is indicated continue to work toward the input of the amplifier, connecting together in turn, V464, V564 grids, Q434, Q534 bases, Q433, Q533 bases and V424, V524 grids, until the trouble section is located.

f. The section in which the trouble is located may now be checked by tube or transistor substitution and/or voltage measurement to locate the defective component.

NOTE

Waveform photographs are included on the Schematic Diagrams, Section 9, to show typical signal levels at various points in the circuit.

NOTES

SECTION 5
PERFORMANCE CHECK

Introduction

This section of the manual provides a means of rapidly checking the performance of the Type 2A61. It is intended to check the calibration of the instrument without the need for performing the complete Calibration Procedure. The Performance Check does not provide for the adjustment of any internal controls. Failure to meet the requirements given in this procedure indicates the need for internal checks or adjustments, and the user should refer to the Calibration Procedure in this manual.

EQUIPMENT REQUIRED

The following (or equivalent) equipment is required for a complete performance check of the Type 2A61. Equipment specifications given here are the minimum requirements for making the performance check. All test instruments are assumed to be calibrated and operating within their rated specifications. If substitute equipment is used, it must meet or exceed the specifications of the recommended equipment.

1. Test Oscilloscope, Tektronix Type 545B with Tektronix Type H Plug-In Unit. Minimum alternate requirements: Delaying Sweep feature, with a delayed sweep range from .5 ms to .5 s and the delaying sweep range from .2 ms to .2 s; minimum deflection factor, 100 millivolts/div;

2. Tektronix Type 561A Oscilloscope.

3. Tektronix Type 2B67 Plug-In Time Base Unit, for use in the Type 561A.

4. Square Wave Generator, Tektronix Type 106. Minimum alternate requirements; risetime not more than 200 ns. Amplitude at least 500 millivolts into 50 Ω; Repetition Rate range from 10 Hz to 25 kHz.

5. Standard Amplitude Calibrator. Tektronix Calibration Fixture, Tektronix Part Number 067-0502-00. Minimum alternate requirements; amplitude accuracy, 0.25%; signal amplitude range, 2 millivolts to 100 millivolts; output signal, 1 kHz square wave and +DC.

6. Audio Sine Wave Generator, Heath Co. IG72. Minimum alternate requirements; sine wave output; frequency range, 60 Hz to 10 kHz; amplitude range, 100 millivolts, p/p to 5 volts, p/p.

7. 10× Probe, Tektronix P6006.

8. Cable, special 4 pin connector on one end and BNC connector on the other. Tektronix Calibration Fixture, Tektronix part number 067-0531-00.

9. 1000:1 Divider, Tektronix Calibration Fixture, Tektronix part number 067-0529-00.

10. Adapter, dual binding post to BNC connector. Tektronix part number 013-0035-00.

11. Adapter, BNC female to BNC female. Tektronix part number 013-0028-00.

12. Termination, 50 Ω, 2 Watt, General Radio Type 874 connector to BNC connector. Tektronix part number 017-0083-00.

13. Three patch cords, 18 inch, with banana type terminals on both ends. Tektronix part number 012-0031-00.

14. Cable, special low noise input. Tektronix part number 012-0072-00.

PERFORMANCE CHECK PROCEDURE

The following procedure uses the equipment listed under Equipment Required. If substitute equipment is used, connections and control settings may need to be altered to correspond to the characteristics of the equipment used.

Preliminary Procedure

1. Install a Type 2B67 in the right hand plug-in compartment in the Type 561A Oscilloscope.

2. Install the Type 2A61 plug-in to be checked in the left hand plug-in compartment in the Type 561A Oscilloscope.

3. Turn the Type 561A Oscilloscope Power switch to On and allow a warm-up period of 20 minutes at 25° C, ±5° C (77° F, ±9° F).

4. Set the Instrument controls as follows:

Type 561A

Focus	Well defined trace
Intensity	Good viewing brilliance

Type 2A61

POSITION	Midrange
FREQ RESPONSE	
FROM	.06 ∿
TO	.3 MHz
INPUT SELECTOR	GND
MILLIVOLTS/DIV	.02
VARIABLE	CALIB

Type 2B67

Position	Midrange
Time/div	1 ms
Variable	Calibrated
Pull 5× Mag	Pushed in
Mode	Norm

Level	Auto
Slope	+
Coupling	AC Slow
Source	Int

1. Adjust Output Amplifier DC Balance (Front Panel)

Requirement-Correct operation of Amplifier Balance, as follows:

a. Position the trace to the Type 561A CRT graticule center with the Type 2A61 POSITION control.

b. Push the Trace Restorer button, concentric with the POSITION control, on the Type 2A61 while adjusting the DC BAL control to move the trace to the graticule center.

c. Hold the Trace Restorer button down. Set the Type 2A61 mV/DIV switch to 1 and set the trace to the graticule center with the POSITION control.

d. Switch the mV/DIV switch to .02 and adjust the DC BAL to move the trace to the graticule center.

e. Repeat the above steps until the trace remains centered while switching the mV/DIV switch between .02 and 1.

f. After the final adjustment the DC BAL control should be at midrange, ±90°.

2. Check mV/DIV Switch Positions

Requirement-The display amplitude must be within ±5% of the mV/DIV switch indication.

a. Reset the following controls:

Type 2A61	
INPUT SELECTOR	A
MILLIVOLTS/DIV	20

b. Connect the 1000:1 Divider, set to ×1, to the Standard Amplitude Calibrator Output.

c. Connect the Special Input Cable (4 pin connector on one end, BNC connector on the other) to the 1000:1 Divider.

d. Set the Standard Amplitude Calibrator Mode to ⊓⊔ and the amplitude to .1 volt.

e. Set the Type 2A61 GAIN ADJUST control for exactly 5 divisions of display on the Type 561A CRT.

f. Check each of the positions of the mV/DIV switch through .05. Switch the Standard Amplitude Calibrator Amplitude simultaneously, as follows:

TABLE 5-1

mV/DIV Switch	Standard Amplitude Calibrator, mV	Divisions of Display
10	50	5, ±5%
5	20	4, ±5%
2	10	5, ±5%
1	5	5, ±5%
.5	2	4, ±5%
.2	1	5, ±5%
.1	.5	5, ±5%
.05	.2	4, ±5%

g. Switch the 1000:1 Divider to 1000×.

h. Switch the Type 2A61 mV/DIV switch to .02.

i. Switch the Standard Amplitude Calibrator Amplitude to .1 volt.

j. Observe 5 divisions, ±5%, of display.

k. Switch the mV/DIV switch to .01.

l. Switch the Standard Amplitude Calibrator Amplitude to 50 mV.

m. Observe 5 divisions, ±5%, of display.

n. Switch the Type 2A61 mV/DIV to 20, the 1000:1 Divider to ×1 and the Standard Amplitude Calibrator to 0.1 V.

3. Check mV/div Variable Ratio

Requirement-Not less than 2.5 to 1.

a. Rotate the mV/DIV VARIABLE control completely counterclockwise.

b. Check for not more than two divisions of display on the Type 561A CRT.

c. Reset mV/DIV VARIABLE to CALIB.

4. Check Position Range

Requirement-Proper operation and range of POSITION control.

a. Adjust the mV/DIV VARIABLE for 4 divisions of display on the Type 561A CRT.

b. Rotate the POSITION control completely clockwise. The bottom of the display must be above the top graticule line on the Type 561A CRT.

c. Rotate the POSITION control completely counterclockwise. The top of the display must be below the bottom graticule line.

d. Reset the POSITION control to midrange and mV/DIV VARIABLE to CALIB.

5. Check Diff Balance

Requirement-50,000:1 rejection ratio. Maximum display, 2 Divisions.

a. Reset the following controls:

Type 2A61	
INPUT SELECTOR	CM
MILLIVOLTS/DIV	.05

b. Set the DIFF BAL control on the Type 2A61 for minimum deflection on the Type 561A CRT.

6. Check Millivolts/div Compensation

Requirement-Optimum square wave response on the leading edge. See Fig. 5-1.

a. Reset the following controls:

Type 2A61

INPUT SELECTOR	A
MILLIVOLTS/DIV	20

Type 2B67

Time/div	50 μs
Coupling	AC Fast

b. Connect the 50 Ω 2 watt Terminating Resistor to the Square Wave Generator + Fast Rise Output.

c. Connect the BNC female to BNC female Adapter to the 50 Ω 2 watt Terminating Resistor.

d. Connect the 1000:1 Divider, set to ×1, to the BNC female to BNC female Adapter.

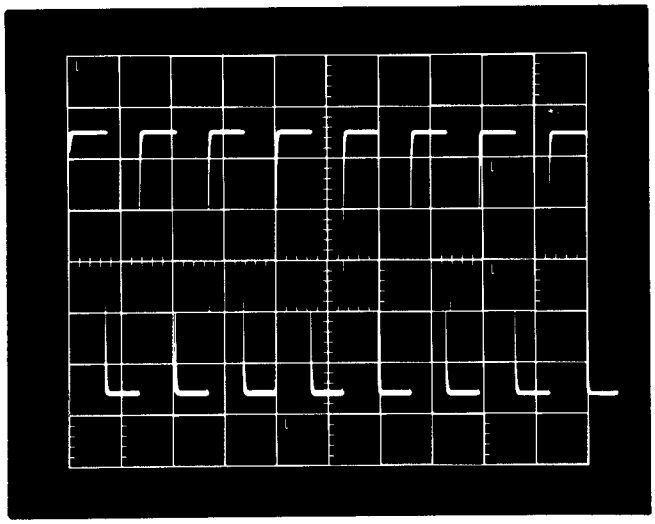

Fig. 5-1. Typical display showing optimum square wave response.

e. Connect the Special Input Cable (4 pin connector on one end and BNC connector on the other) to the 1000:1 Divider.

f. Set the Square Wave Generator Repetition Rate to 10 kHz.

g. Adjust the Square Wave Generator + Transition Amplitude to 7 divisions of display on the Type 561A CRT.

h. Check for optimum square wave response (minimum overshoot and rolloff). See Fig. 5-1.

7. Check Upper Frequency Response

Requirement-Risetime, ≤1.2 μs at 20 mV/DIV
≤3.5 μs at .02 mV/DIV

a. Reset the following controls:

Type 2B67

Time/div	5 μs
Pull 5× Mag	Pull out

Square Wave Generator

Repetition Rate	25 kHz
+ Transition Amplitude	8 divisions of display on the 561A

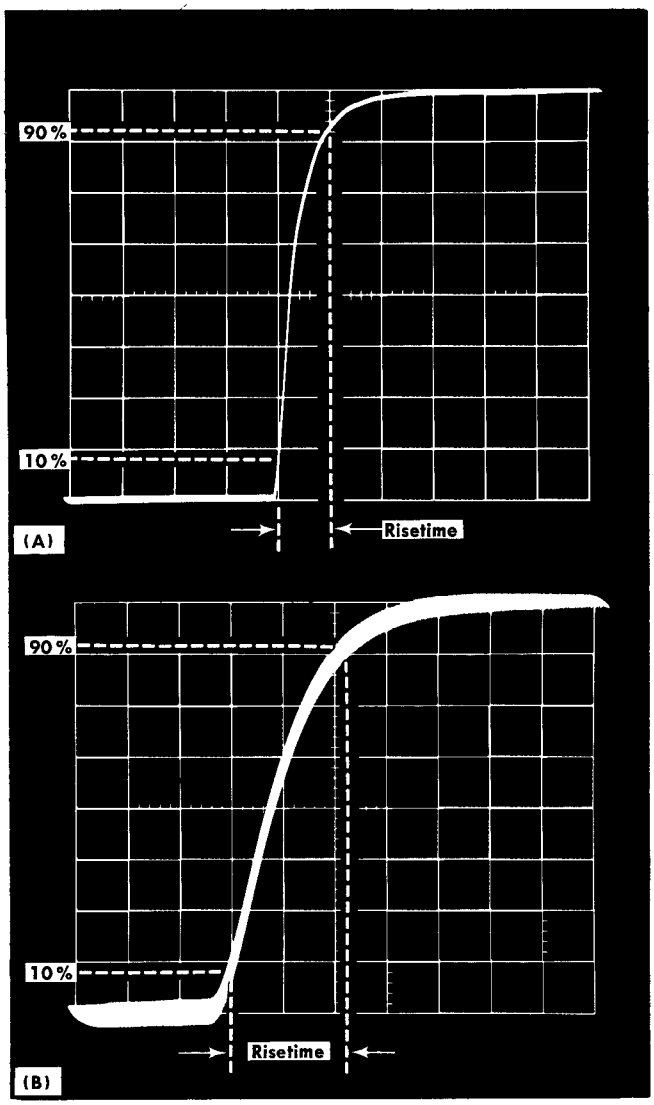

Fig. 5-2. Typical display of risetime (A) 20 mV/DIV, (B) .02 mV/DIV.

b. Measure the risetime at the 10% to 90% amplitude points. Risetime, ≤1.2 μs. See Fig. 5-2A.

c. Switch the 1000:1 Divider to 1000×.

d. Switch the Type 2A61 mV/DIV switch to .02.

e. Switch the FREQ RESPONSE FROM switch to 600 ∿.

f. Measure the risetime from the 10% to 90% amplitude points. Risetime, ≤3.5 μs. See Fig. 5-2B.

g. Switch the FREQ RESPONSE FROM switch to .06 ∿.

8. Check Upper Frequency Limited Response

Requirement-Risetimes as shown below.

a. Reset the following controls:

Type 2A61

FREQ RESPONSE TO	60 kHz
MILLIVOLTS/DIV	20

Type 2B67

Time/div	20 μs

b. Measure the risetime from the 10% to 90% amplitude points.

c. Measured risetime should be within the range 4.5 to 8.3 μs.

d. Push in the "Pull 5× Mag" knob.

e. Check the risetimes for the remaining FREQ RESPONSE TO positions, as follows:

TABLE 5-2

FREQ RESPONSE TO	2B67 Time/div	Square Wave Gen Frequency	Measured Risetime
6 kHz	50 μs	2.5 kHz	45 to 83 μs
600 ∿	.5 ms	250 Hz	.45 to .83 ms
60 ∿	5 ms	25 Hz	4.5 to 8.3 ms

9. Lower Frequency Limited Response

Requirement-Decay times as shown below.

a. Reset the following controls:

Type 2A61

FREQ RESPONSE	
FROM	600 ∿
TO	.1-.3 MHz

Type 2B67

Time/div	.2 ms

b. Set the Test Oscilloscope controls as follows:

Horiz Display	'B' Intensified by 'A'
Magnifier	Off
Trig Mode, A Sweep	AC
Trig Slope, A Sweep	+ Int
Trig Level, A Sweep	Clockwise
Stability, A Sweep	Clockwise
Time/cm, A Sweep	.2 ms
Time/cm Variable, A Sweep	Calibrated
Trig Mode, B Sweep	AC
Trig Slope, B Sweep	+ Int
Trig Level, B Sweep	Clockwise
Stability, B Sweep	Clockwise
Time/cm, B Sweep	.5 ms
Time/cm, Variable, B Sweep	Calibrated

NOTE

The Oscilloscope, if a plug-in type, should have the plug-in installed in the plug-in compartment. The control settings of the plug-in are not important at this point.

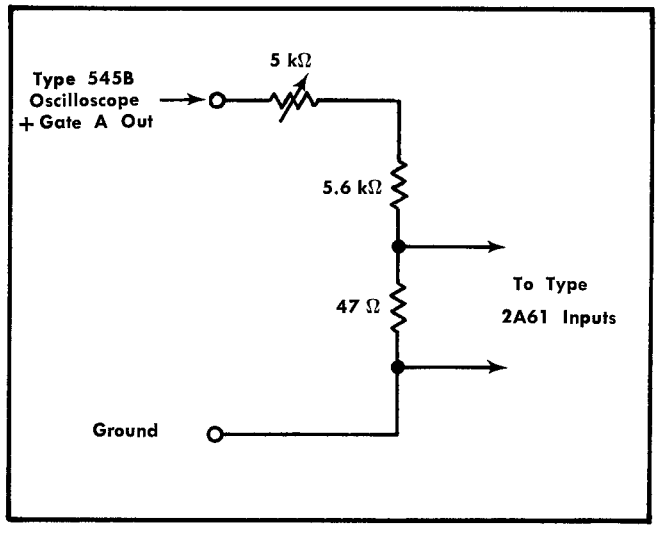

Fig. 5-3. Diagram of suggested + Gate Attenuator.

c. Connect the special gate attenuator suggested in Fig. 5-3 between the + Gate A and Gnd on the test oscilloscope.

d. Connect the special low capacitance cable to the 4 pin INPUT connector on the Type 2A61.

e. Connect both of the shielded pairs of the low capacitance cable across the 50 Ω resistor of the gate generator, as shown in Fig. 5-4.

f. Adjust the Type 2B67 triggering level control for a stable display on the Type 561A CRT.

g. Adjust the 5 kΩ variable resistor in the gate attenuator for 8 divisions of display on the Type 561A CRT.

h. Measure the decay time of the displayed waveform as shown in Fig. 5-5.

i. Using the following table, check the decay times for each of the FREQUENCY RESPONSE FROM switch positions.

TABLE 5-3

FREQ RESPONSE FROM	2B67 Time/div	A Sweep Time/cm	B Sweep Time/cm	Decay Time
600 ∿	.2 ms	.2 ms	.5 ms	.21 to .37 ms
60 ∿	2 ms	2 ms	5 ms	2.1 to 3.7 ms
6 ∿	20 ms	20 ms	50 ms	21 to 37 ms
.6 ∿	.2 s	.2 s	.5 s	.21 to .37 s

NOTE

For each new setting of the FREQUENCY RESPONSE FROM switch and the test oscilloscope time bases, adjust the gate attenuator variable resistance for 8 divisions of display on the Type 561A CRT.

j. Set the FREQUENCY RESPONSE FROM switch to .06 ∿.

k. Set the Type 2B67 Time/div to 1 s.

l. Set the test oscilloscope Horizontal Display to Single Sweep.

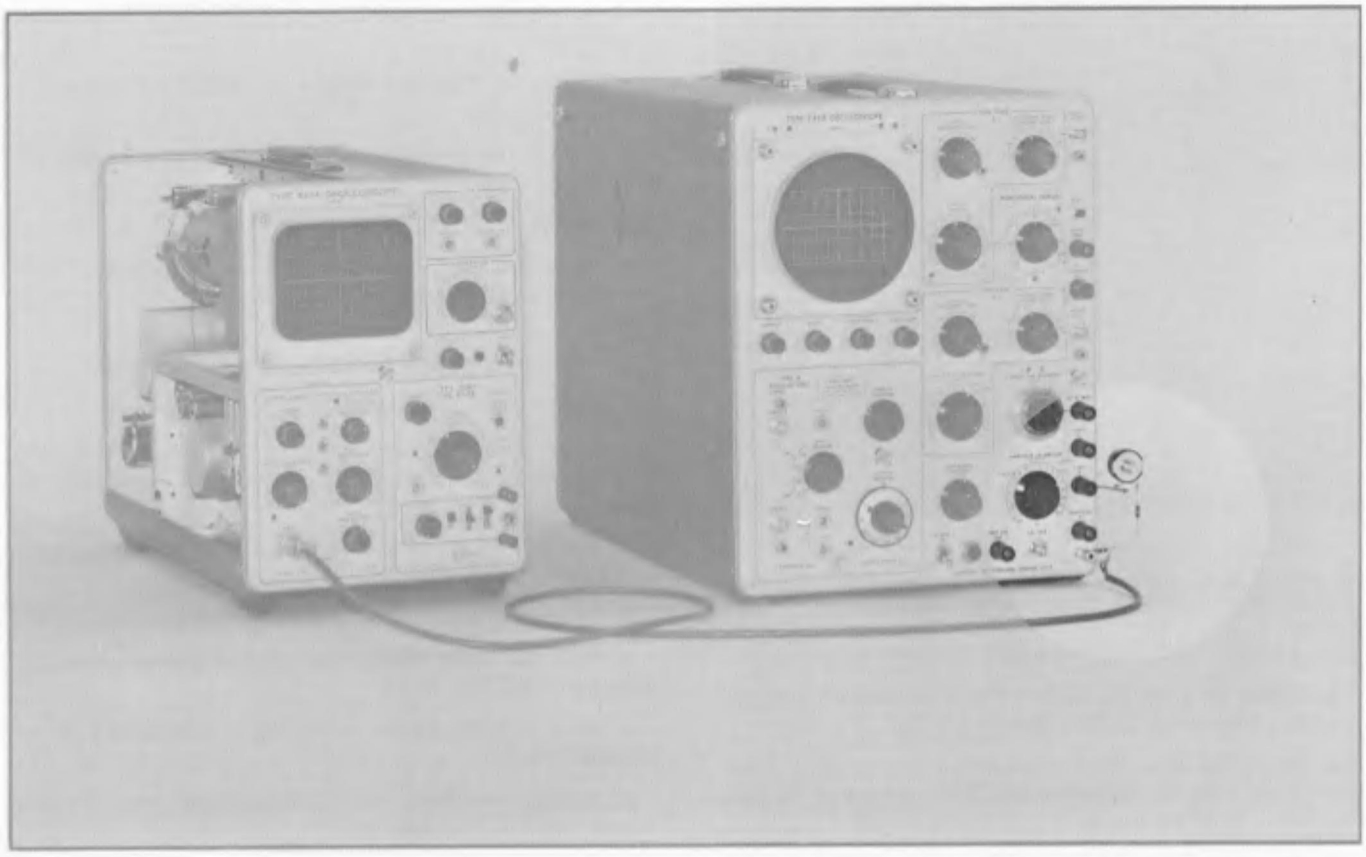

Fig. 5-4. + Gate Attenuator connected to the Test Oscilloscope.

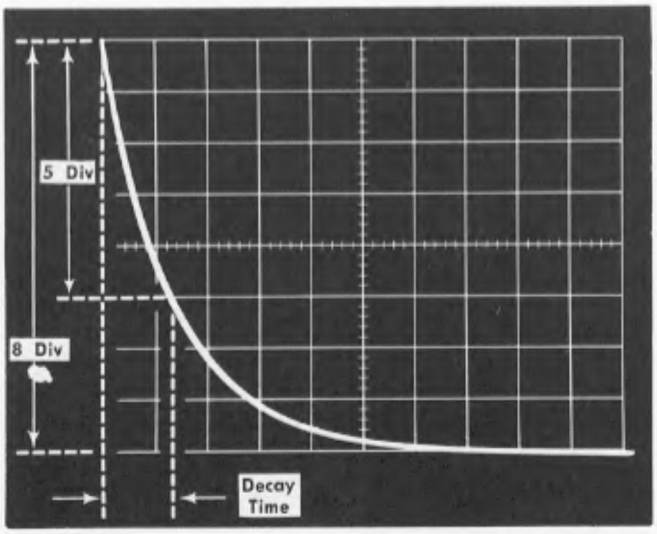

Fig. 5-5. Typical CRT display of decay time.

m. Set the test oscilloscope Time Base A Time/cm to 1 s.

n. Push the reset button on the test oscilloscope and measure the decay time of the sweep displayed on the Type 561A CRT. Decay time, 2.45 to 3.75 s.

9A. Lower Frequency Limited Response (Alternate Method)

Requirement-Display of decays as shown in Fig. 5-6.

a. Reset the following controls:

Type 2A61

FREQ RESPONSE	
TO	.1-.3 MHz
FROM	.06 ∿

Type 2B67

Time/div	5 ms

b. Connect a GR to BNC 50 Ω Termination to the Type 106 Square Wave Generator + Fast Rise Output.

c. Connect a BNC female to BNC female adapter to the GR to BNC termination.

d. Connect the BNC end of the Special Input Cable (with BNC connector on one end and the 4 pin connector on the other) to the BNC female to BNC female adapter.

e. Connect the 4 pin connector end of the Special Input Cable to the Type 2A61 INPUT (INPUT SELECTOR to A).

f. Set the Type 106 Square Wave Generator Repetition Rate Range switch to 10 Hz and the Multiplier to 2.

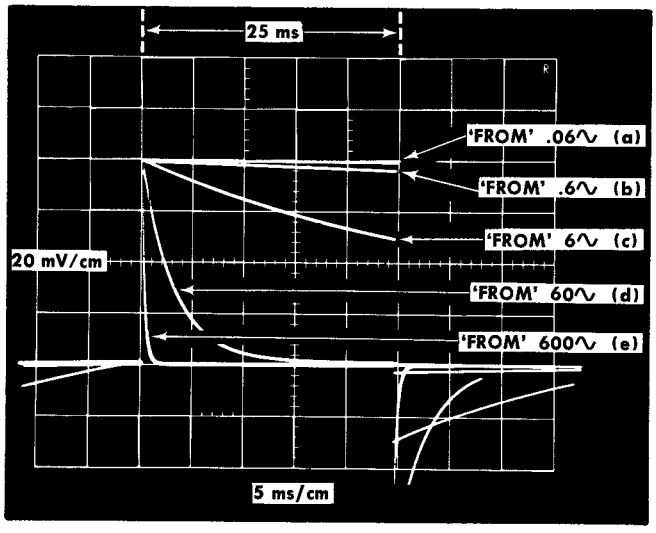

Fig. 5-6. Multiple exposure photograph showing decay characteristics for FREQ RESPONSE 'FROM' switch positions .06 ∿ through 600 ∿.

g. Switch the Type 106 Square Wave Generator Hi Amplitude-Fast Rise switch to Fast Rise.

h. Adjust the Type 106 Square Wave Generator + Transition Amplitude for approximately 4 cm of vertical display. See Fig. 5-6, waveform A.

i. Adjust the Type 106 Square Wave Generator Repetition Rate Multiplier for 5 cm of horizontal display. See Fig. 5-6, waveform A.

j. Switch the Type 2A61 FREQ RESPONSE FROM switch to .6 ∿.

k. Observe the displayed waveform. Check for similarity to waveform B in Fig. 5-6.

l. Switch through the FREQ RESPONSE FROM switch position 6 ∿, 60 ∿ and 600 ∿ and check the displayed waveform against waveforms C, D and E, respectively, Fig. 5-6, for low frequency response characteristics. Use the Type 2A61 POSITION control to position the start of the transition to the same point on the graticule for each step.

m. Set the FREQ RESPONSE FROM switch to .06 ∿.

10. Check Trace Restorer

Requirement-Must return the trace to the CRT center. Trace indicator neon must be lighted when the trace is out of the graticule area.

a. Reset the following controls:

Type 2B67

Coupling	AC Fast

b. Connect the BNC end of the Special Input Cable (BNC connector on one end and 4 pin connector on the other) to the Standard Amplitude Calibrator Output.

c. Connect the 4 pin connector end of the Special Input Cable to the Type 2A61 INPUT.

d. Center the trace vertically with the Type 2A61 POSITION control.

e. Switch the Standard Amplitude Calibrator Mode switch to +DC.

f. Switch the Standard Amplitude Calibrator Amplitude switch to .1 volt.

g. Switch the Type 2A61 INPUT SELECTOR to —B.

h. Note that the Trace Indicator neon lights and then extinguishes as the trace returns to the Type 561A graticule area.

i. Allow the trace to return to the graticule center.

j. Switch the Type 2A61 INPUT SELECTOR to A.

k. Note that the Trace Indicator neon lights and then extinguishes as the trace returns to the Type 561A graticule area.

l. Switch the Standard Amplitude Calibrator Mode switch to ⊓⊔.

m. Observe 5 divisions of display on the Type 561A CRT.

n. Push the trace restorer button (red button concentric with the POSITION knob).

o. Note that the square wave display disappears into a straight line.

p. Release the Trace Restorer button and note that the square wave display returns.

11. Check Line Filter

Requirement-Must attenuate the Power line frequency by a factor of 50:1 (1 division of display).

a. Reset the following controls:

Type 2B67

Coupling	AC Slow
Time/div	10 ms

b. Connect two patch cords with banana terminals on each end, from the Audio Sine Wave Generator output jacks on the dual banana to BNC Adapter. (Connect the Sine Wave Generator ground to the black binding post.)

c. Connect a BNC female to BNC female adapter to the BNC end of the dual banana to BNC adapter.

d. Connect the Special Input Cable to the BNC end of the dual banana to BNC Adapter.

e. Adjust the Audio Sine Wave Generator Amplitude control for a display of 5 divisions on the Type 561A CRT. (See Fig. 5-7A).

f. Set the Audio Sine Wave Generator Frequency to 60 Hz.

g. Switch the Type 2A61 mV/DIV switch to 2.

h. Switch the Type 2A61 FILTER to IN.

i. Check for not more that one division of display. (See Fig. 5-7B.)

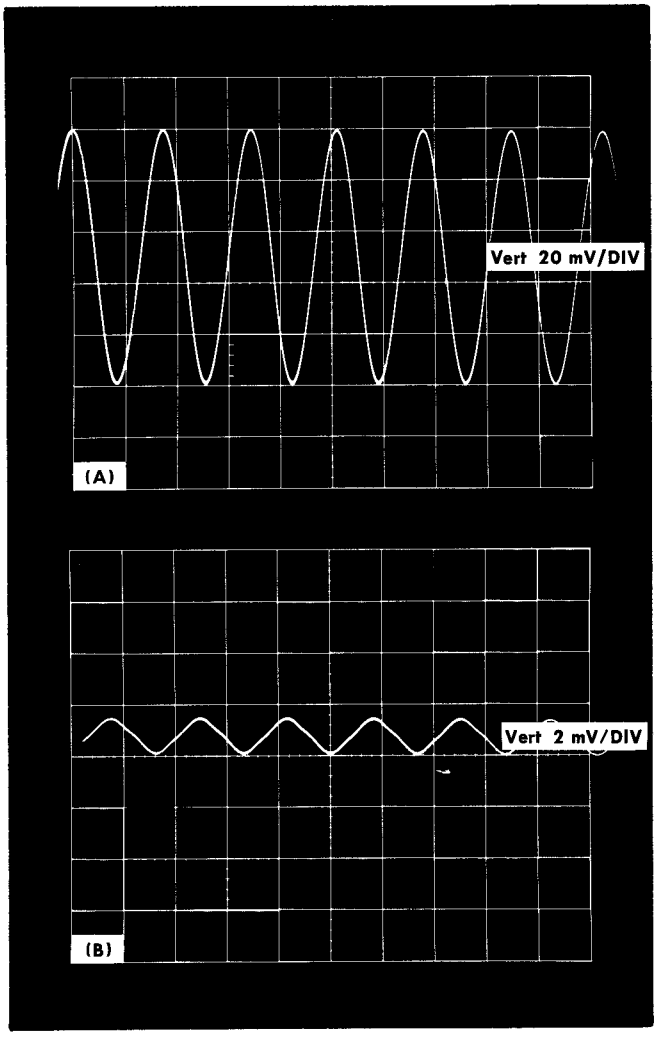

Fig. 5-7. Typical CRT display showing (A) FILTER OUT (B) FILTER IN.

12. Check Filter Insertion Loss

Requirement-Insertion loss at 1 kHz less than 15%.

a. Reset the following controls:

Type 2A61

FILTER	OUT
mV/DIV	20

Type 2B67

Time/div	1 ms

Audio Sine Wave Generator

Frequency	1 kHz

b. Set the Audio Sine Wave Generator Amplitude for 5 divisions of display on the Type 561A CRT.

c. Switch the Type 2A61 FILTER to IN.

d. Check for a display amplitude of not less than 4.25 divisions on the Type 561A CRT.

13. Check Common Mode Rejection at 10 kHz

Requirement-Rejection ratio of 50,000:1 (2 divisions of display).

a. Reset the following controls:

Type 2A61

INPUT SELECTOR	A—B
MILLIVOLTS/DIV	.05
FILTER	OUT

Type 2B67

Time/Div	.1 ms
Source	Int

Audio Sine Wave Generator

Frequency	10 kHz
Amplitude	5 volts, p/p

b. Connect the 10× Probe to the A Input of the Test Oscilloscope Plug-in.

c. Connect the 10× Probe tip to the red terminal of the dual binding post to BNC Adapter.

d. Connect the 10× Probe Gnd lead to the black terminal of the dual banana to BNC adapter.

e. Adjust the Audio Sine Wave Generator Output for 5 volts, p/p, displayed on the test oscilloscope CRT.

f. Check for a 50,000:1 rejection ratio (2 divisions of display on the Type 561A CRT is a 50,000:1 rejection ratio).

14. Check Hum and Noise

Requirement-Maximum hum and/or noise, 0.02 mV.

a. Reset the following controls:

Type 2A61

FREQ RESPONSE	
FROM	.06 ∿
TO	.3 MHz
INPUT SELECTOR	GND
MILLIVOLTS/DIV	.01

Type 2B67

Time/div	10 ms
Mode	Norm
Level	Free run
Coupling	AC Slow

b. Check for a display amplitude of not more than 2 divisions, (20 μV).

c. Switch the Type 2B67 Time/div switch to 0.5 s.

d. Noise peaks should not exceed 2 divisions, 20 μV, except occasionally (a few times per second).

NOTES

SECTION 6
CALIBRATION

Introduction

This calibration procedure can be used either for complete calibration of the Type 2A61 to return it to original performance, or as an operational check of instrument performance. Completion of every step in this procedure returns the Type 2A61 to original factory performance standards. If it is desired to merely touch up the calibration, perform only those steps entitled "Adjust" . . . .

NOTE

The "Adjust" . . . steps provide a check of instrument performance before the adjustment is made. To prevent recalibration of other circuits when performing a partial calibration, readjust only if the listed tolerance is not met.

General Information

Any needed maintenance should be performed before proceeding with calibration. Troubles which become apparent during calibration should be corrected using the techniques given in the Maintenance section of the Instruction Manual.

This procedure is arranged in a sequence which allows this instrument to be calibrated with the least insteraction of adjustments and reconnection of equipment. If desired, the steps may be performed out of sequence or a step may be done individually. However, some adjustments affect the calibration of other circuits within the instrument. In this case, it will be necessary to check the operation of other parts of the instrument. When a step or check interacts with others, the steps which need to be checked will be noted.

The location of test points and adjustments is shown in each step. Waveforms which are helpful in determining the correct adjustment or operation are also shown.

Where references are made to divisions of deflection, the indication will be major divisions.

EQUIPMENT REQUIRED (see Fig. 6-1)

General

The following equipment, or its equivalent, is required for complete calibration of the Type 2A61. Specifications given are the minimum necessary for accurate calibration of this instrument. All test equipment is assumed to be correctly calibrated and operating within the original specifications. If equipment is substituted, it must meet or exceed the specifications of the recommended equipment.

Special Test Equipment

For the quickest and most accurate calibration, special calibration fixtures are used where necessary. All calibration fixtures listed under Equipment Required can be obtained from Tektronix, Inc. Order by part number through your local Tektronix Field Office or representative.

1. Test Oscilloscope. Deflection factor, 100 millivolts/div; delaying sweep feature, with a delayed sweep range from .5 ms to .5 s and the delaying sweep range from .2 ms to .2 s. Tektronix Type 545B with Type H Plug-In is recommended.

2. Tektronix Type 561A Ocsilloscope.

3. Tektronix Type 2B67 Plug-In Time Base Unit, for use in the Type 561A.

4. Square Wave Generator. Risetime less than 200 ns; amplitude at least 500 millivolts into 50 Ω; repetition rate, range from 25 Hz to 25 kHz. The Tektronix Type 106 Square-Wave Generator is recommended.

5. Standard Amplitude Calibrator. Signal amplitude range, 2 millivolts to 100 millivolts; amplitude accuracy, 0.25%; output signal, 1 Hz square wave and + DC. Tektronix Calibration Fixture 067-0502-00 is recommended.

6. Audio Sine Wave Generator. Sine wave output; frequency range, 60 Hz to 10 kHz; amplitude range, 100 millivolts, p/p to 5 volts, p/p. Heathkit Audio Generator, IG 72, is recommended.

7. Voltohmmeter. DC sensitivity, 20,000 ohms/volt; DC voltage range, approximately 2 volts to 200 volts. Simpson Model 262 voltohmmeter is recommended.

8. Probe. 10× with BNC connector. Tektronix P6006 is recommended.

9. 1000:1 Divider. Tektronix Calibration Fixture, 067-0529-00.

10. Special Input Cable. Tektronix Calibration Fixture, 067-0531-00.

11. Special low noise input cable, Tektronix part number 012-0072-00. Furnished with the Type 2A61.

12. Cable, flexible extension, with 24 pin Amphenol connectors. Tektronix part number 012-0066-00.

13. Patch Cords (2). 18 inch with banana type terminals on both ends. Tektronix part number 012-0054-00.

14. Adapter. Dual binding post to BNC connector. Tektronix part number 013-0035-00.

15. Adapter. BNC female to BNC female. Tektronix part number 013-0028-00.

16. Termination. 50 Ω, 2 watt, General Radio Type 874 to BNC connectors.

CALIBRATION RECORD AND INDEX

This abridged calibration procedure is provided to aid in checking the operation of the Type 2A61. It may be used as a calibration guide by the exeprienced calibrator, or it

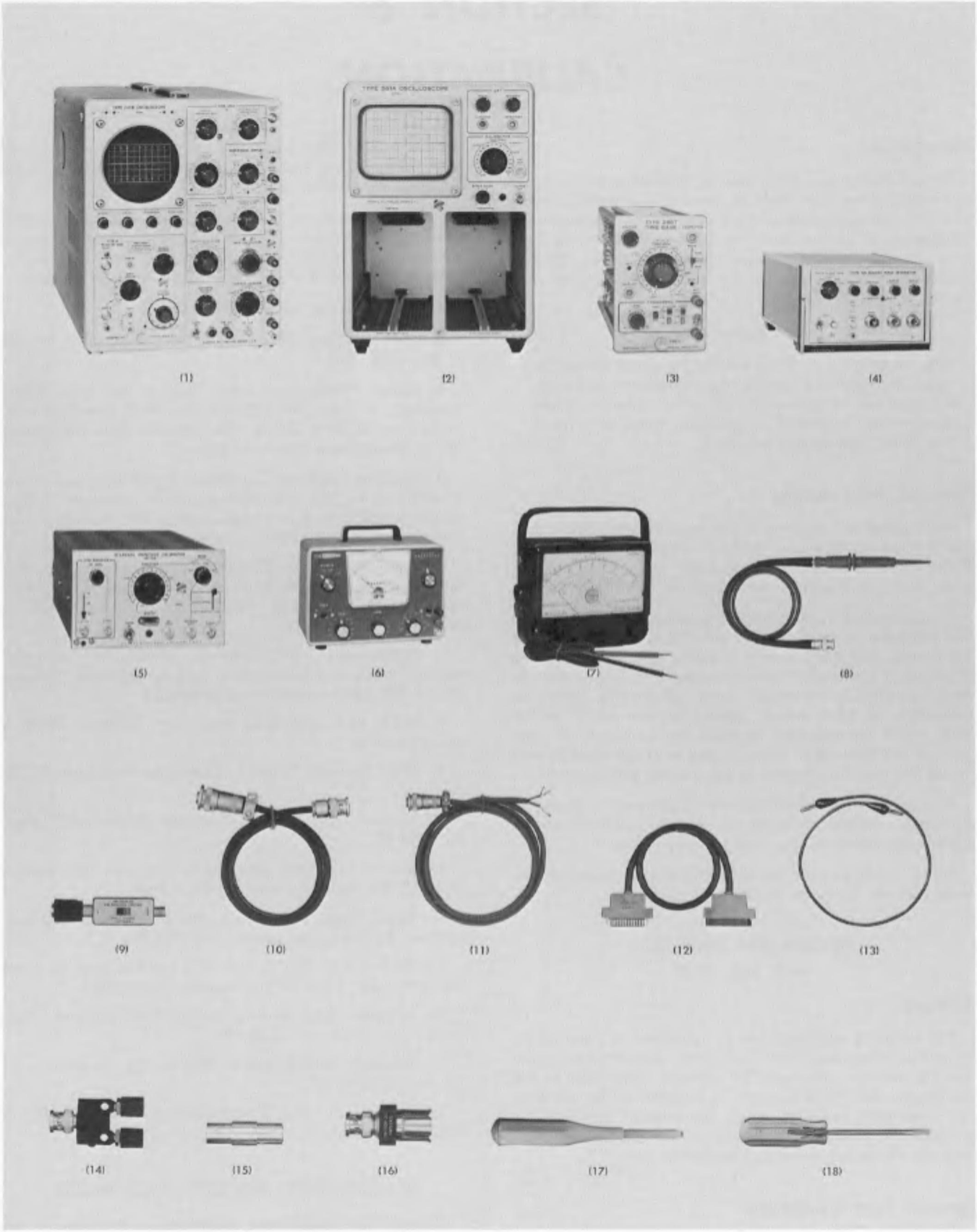

Fig. 6-1. Recommended calibration equipment.

may be used as a calibration record. Since the step numbers and titles used here correspond to those used in the complete Calibration Procedure, the following procedure serves as an index to locate a step in the complete Calibration Procedure.

Type 2A61, Serial No. _____

Calibration Date _____

☐ 1. Check output DC level (page 6-6)
180 volts, ±10 volts.

☐ 2. Check internal voltages (page 6-8)
+122 volts, ±7 volts.

☐ 3. Adjust Trigger DC Level (page 6-8)
Zero volts at pin 1, V584.

☐ 4. Adjust output amplifier DC balance (page 6-8)
Trace remains centered while switching mV/DIV switch between .02 and 1.

☐ 5. Adjust internal balance (page 6-9)
Zero volts between collectors of Q434 and Q534.

☐ 6. Check grid current (page 6-9)
Voltage between collectors of Q434 and Q534 not more than 1 volt.

☐ 7. Adjust collector volts (page 6-9)
7 volts, collector to emitter, Q434 and Q534.

☐ 8. Adjust Gain (Preset) (page 6-10)
5 divisions of display for 100 mV in.

☐ 9. Adjust Diff Bal and Int Diff Bal (page 6-11)
Minimum deflection.

☐ 10. Adjust C424 and C524 (page 6-13)
Minimum deflection.

☐ 11. Adjust gain tracking (page 6-14)
Correct operation, see Calibration Procedure.

☐ 12. Adjust Gain (page 6-17)
Gain range as shown in Calibration Procedure.
5 divisions of display with 100 millivolts in.

☐ 13. Check mV/DIV Variable ratio (page 6-17)
Ratio, 2.5:1.

☐ 14. Check position range (page 6-17)
Correct operation. See Calibration Procedure.

☐ 15. Check mV/DIV Switch positions (page 6-18)
Correct operation. See Calibration Procedure.

☐ 16. Check mV/DIV compensation. (page 6-20)
Optimum square wave response.

☐ 17. Check upper frequency response (page 6-20)
Risetime, $\leq$ 1.2 μs at 20 mV/DIV.
Risetime, $\leq$ 3.5 μs at .02 mV/DIV.

☐ 18. Check upper frequency limited response (page 6-21)
Correct risetimes, as shown in Calibration Procedure.

☐ 19. Check lower frequency limited response (page 6-23)
Correct decay times, as shown in Calibration Procedure.

☐ 19A. Check lower frequency limited response alternate method (page 6-24)

☐ 20. Check Trace Restorer (page 6-26)
Trace must return to the CRT center when Restorer button is depressed. Trace Indicator neon must be lighted when the trace is out of the graticule area.

☐ 21. Check line filter (page 6-27)
Line filter must attenuate the power line frequency by a factor of 50:1. (1 division of display).

☐ 22. Check hum and noise (page 6-28)
Maximum hum or noise, .02 millivolts.

CALIBRATION PROCEDURE

General

In the following calibration procedure, a test equipment setup is shown for each major setup change. Complete control settings are listed following the picture. To aid in locating individual controls which have been changed during complete calibration, these control names are printed in **bold type**. If only a partial calibration is performed, start with the nearest setup preceding the desired portion.

Fig. 6-2. Front view of the Type 2A61.

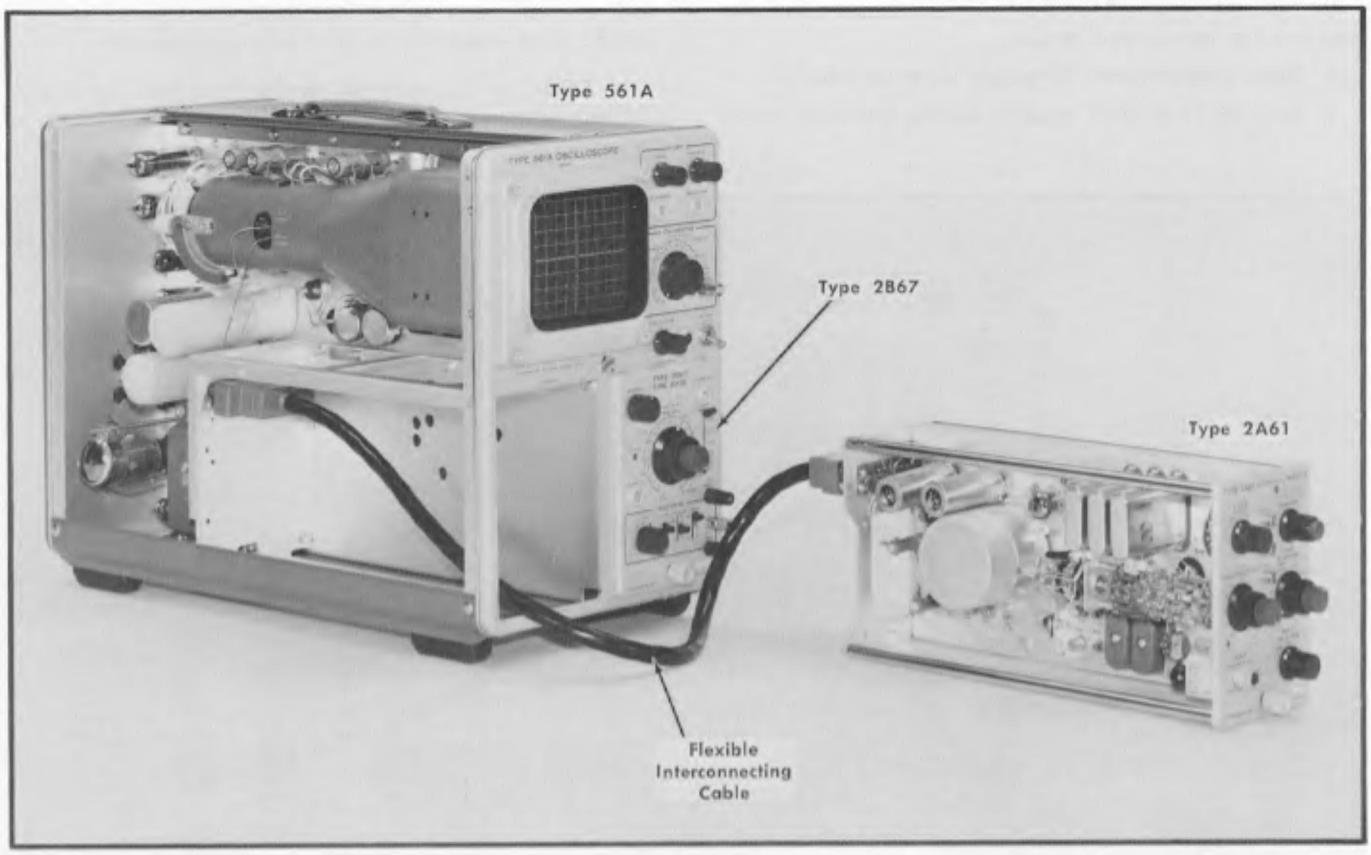

Fig. 6-3. Operation of the Type 2A61 outside the Type 561A Oscilloscope.

NOTE

When performing a complete recalibration, best performance will be provided if each adjustment is made to the exact setting, even if the Check is within the allowable tolerance.

The following procedure uses the equipment listed under Equipment Required. If substitute equipment is used, control settings or setup must be altered to meet the requirements of the equipment used.

Preliminary Procedure

1. If a major repair has been made, preset the Type 2A61 controls as follows:

Front Panel (see Fig. 6-2)

POSITION	Midrange
FREQ RESPONSE	
FROM	.6 ∿
TO	.3 MHz
INPUT SELECTOR	GND
FILTER	OUT
MILLIVOLTS/DIV	1
VARIABLE	CALIB
GAIN ADJ	Midrange
DIFF BAL	Midrange
DC BAL	Midrange

Internal

Int Trig DC Level	Midrange
Int DC Bal	Midrange
Int Diff Bal	Midrange
20 mV Gain	Midrange
.01 mV Gain	Midrange
Collector Volts Adjust	Counterclockwise

2. Preset the Type 2B67 Time Base Plug-In front panel controls as follows:

Position	Midrange
Time/div	1 ms
Variable	Calibrated
Pull 5× Mag	Pushed in
Mode	Norm
Level	Auto
Slope	+
Coupling	AC Slow
Source	Int

3. Setup

a. Connect the Type 2A61 to the Type 561A, using the flexible extender cable as shown in Fig. 6-3.

b. Turn the Type 561A Intensity control counterclockwise and turn the Power switch to On.

c. Allow approximately 20 minutes warm-up time.

d. Turn the Type 561A Intensity control clockwise slowly until a trace is seen on the Type 561A CRT. Set the intensity control to give the trace a good viewing brilliance.

e. Adjust the Focus control on the Type 561A for a well defined trace.

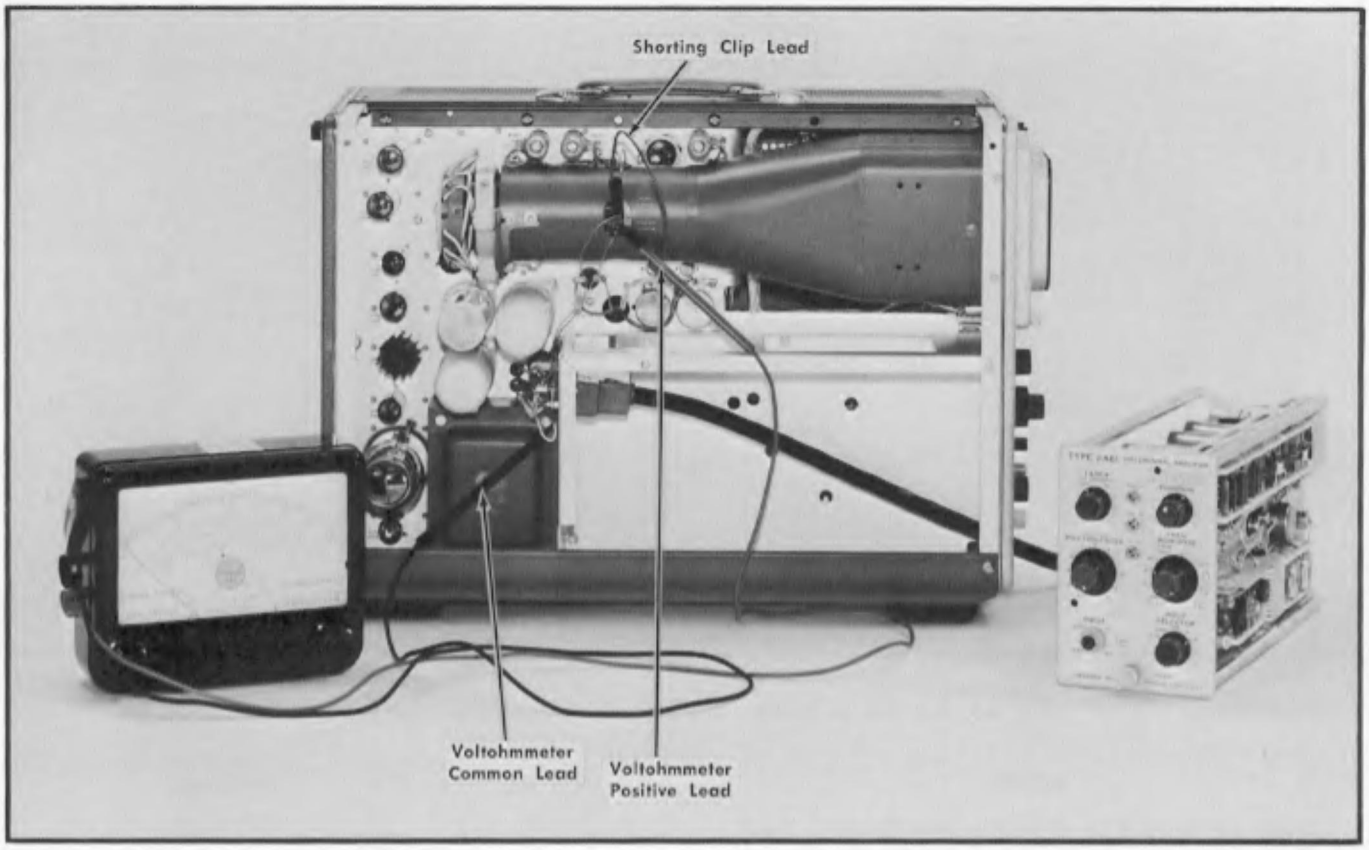

Fig. 6-4. Test equipment setup for step 1.

Control Settings

Type 2A61

POSITION	Midrange
FREQ RESPONSE	
FROM	.6 ∿
TO	.3 MHz
INPUT SELECTOR	GND
FILTER	OUT
MILLIVOLTS/DIV	1
VARIABLE	CALIB

Type 2B67

Position	Midrange
Time/div	1 ms
Variable	Calibrated
Pull 5× Mag	Pushed in
Mode	Norm
Level	Auto
Slope	+
Coupling	AC Slow
Source	Int

1. Check Output DC Level

a. Test equipment setup is shown in Fig. 6-4.

b. Connect the CRT vertical deflection plate pins together with a very short clip lead. (If oscillation occurs, install a ferrite bead on the clip lead as shown in Fig. 6-5). CAUTION: Do not ground the CRT pins.

c. Adjust the Type 561A Focus and Intensity controls for a moderately bright, well defined trace on the CRT.

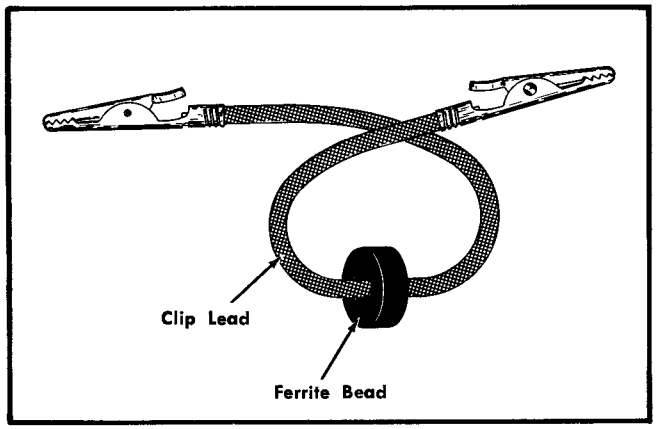

Fig. 6-5. Clip lead with ferrite bead installed.

d. Connect the common meter lead to chassis ground.

e. Connect the positive lead of the meter, set to the 400 volt DC range, to the CRT pins connected together in step b.

f. Read 180 volts, ±10 volts.

g. Note the trace position on the CRT. This is the electrical center of the Type 561A CRT.

h. Remove the meter leads and the clip lead.

i. Mechanically center the Type 2A61 POSITION control. The CRT trace must be within ±2 divisions of the electrical center determined above.

NOTES

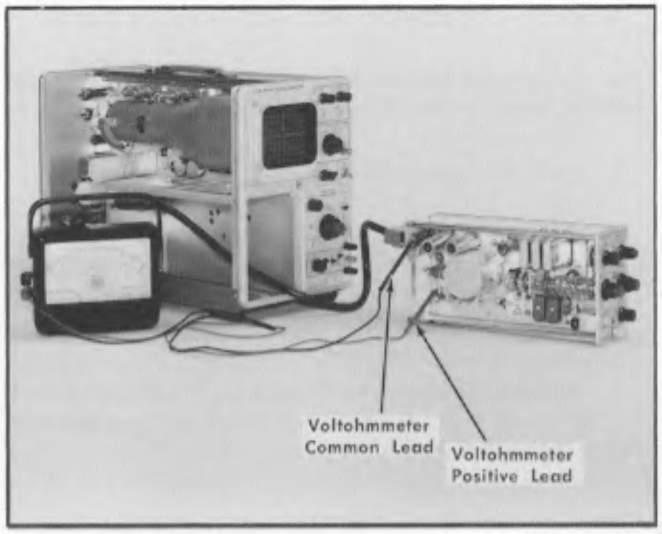

Fig. 6-6. Initial test equipment setup for steps 2 through 7.

Control Settings

Type 2A61

POSITION	Midrange
FREQ RESPONSE	
FROM	.6 ∿
TO	.3 MHz
INPUT SELECTOR	GND
FILTER	OUT
MILLIVOLTS/DIV	1
VARIABLE	CALIB

Type 2B67

Position	Midrange
Time/div	1 ms
Variable	Calibrated
Pull 5× Mag	Pushed in
Mode	Norm
Level	Auto
Slope	+
Coupling	AC Slow
Source	Int

2. Check Internal Voltage

a. Initial test equipment setup is shown in Fig. 6-6.

b. Set the voltohmmeter range to 160 volts DC.

c. Connect the meter common lead to ground on the Type 2A61. A convenient ground lug is shown in Fig. 6-7.

d. Connect the meter positive lead to the white-red lead on R431, as shown in Fig. 6-7.

e. Read +122 volts, ±7 volts.

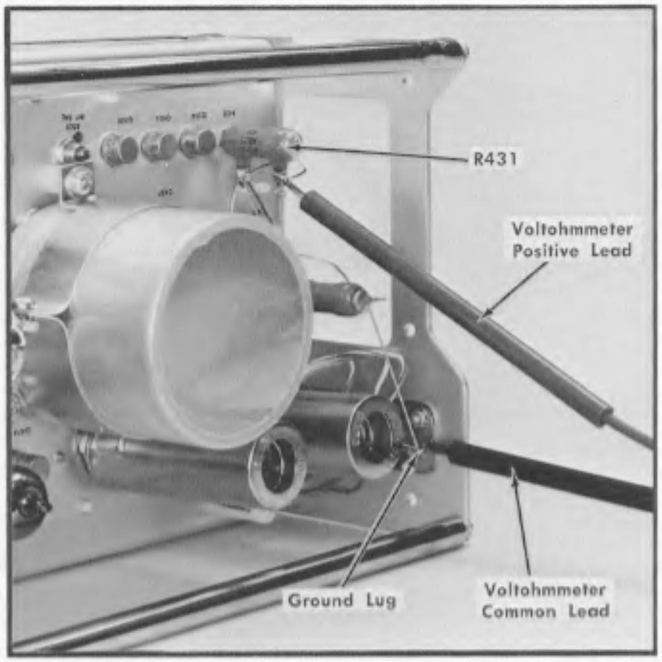

Fig. 6-7. Location of R431 and test points.

NOTE

If the point does not measure +122 volts, ±7 volts, it may be an indication of tube (V424, V425, V524, V525) or transistor (Q433, Q434, Q533, Q534, Q504, Q514) trouble. Isolate the trouble to the tube or transistor by component substitution or voltage measurement.

3. Adjust Trigger DC Level

a. Test equipment setup is given in step 2.

b. Position the trace to the CRT electrical center determined in step 1.

c. Set the voltmeter range to 8 volts, DC.

d. Connect the positive voltmeter lead to pin 1, V584. See Fig. 6-8.

e. Adjust the INT TRIG DC LEVEL control, R588, for zero volts on the meter.

4. Adjust Output Amplifier DC Balance

a. Test equipment setup is given in step 3.

b. Set the Type 2A61 MILLIVOLTS/DIV switch to 1.

c. Position the trace to the CRT electrical center with the Type 2A61 POSITION control.

d. Switch the Type 2A61 MILLIVOLTS/DIV switch to .02.

e. Adjust the Type 2A61 DC BAL control to return the trace to the CRT electrical center.

f. Switch the Type 2A61 MILLIVOLTS/DIV switch to 1.

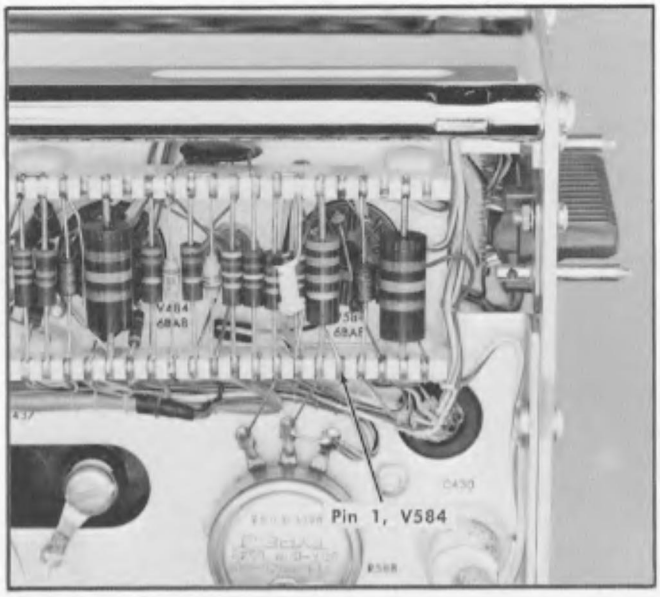

Fig. 6-8. Location of pin 1, V584.

g. Position the trace to the CRT electrical center with the Type 2A61 POSITION control.

h. Switch the Type 2A61 MILLIVOLTS/DIV switch to .02.

i. Readjust the Type 2A61 DC BAL control to position the trace to the CRT electrical center.

j. Switch the Type 2A61 MILLIVOLTS/DIV switch to 1.

5. Adjust Internal Balance

a. Leave the test equipment set up as in step 4.

b. Short circuit the terminals of C437 (20,000 μF) together with a jumper wire. See Fig. 6-9 for location of C437 terminals.

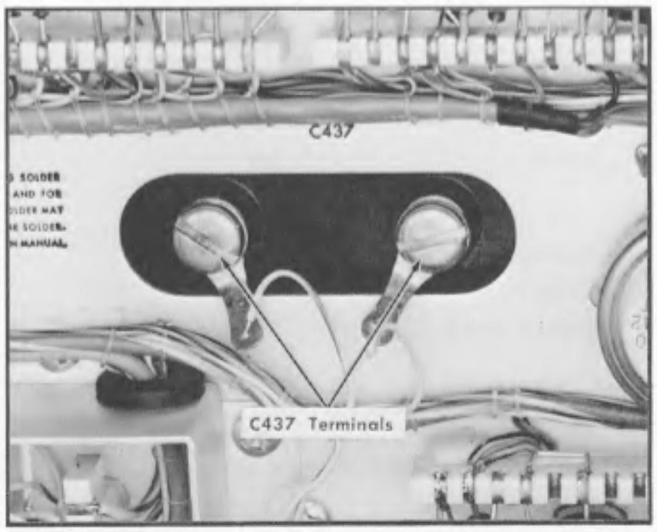

Fig. 6-9. Location of C437 terminals.

c. Set the DC voltmeter range to 8 volts.

d. Connect the DC voltmeter common lead to the collector of Q434 (Fig. 6-10).

e. Connect the DC voltmeter positive lead to the collector of Q534 (Fig. 6-10).

f. Adjust the Type 2A61 INT DC BAL, R501, for zero volts between the collectors.

g. Reset the DC voltmeter range to 1.6 volts.

h. Readjust the Type 2A61 INT DC BAL, R501, for zero volts between the collectors.

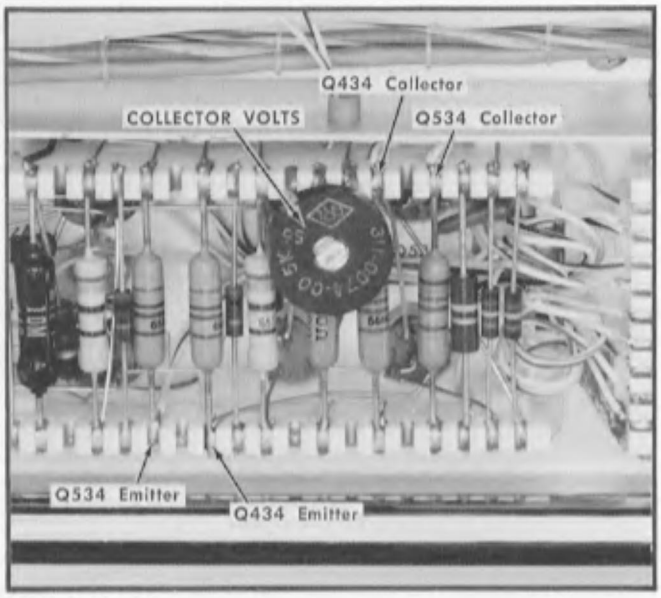

Fig. 6-10. Location of test points for steps 5 and 6.

6. Check Grid Current, V424, V425, V524 and V525

a. Test equipment setup is given in step 5.

b. Leave the voltmeter connected to the collectors of Q434 and Q534.

c. Set the Type 2A61 MILLIVOLTS/DIV to 10.

d. Set the Type 2A61 INPUT SELECTOR to A.

e. The voltage measured between Q434 and Q534 collectors should be not more than 1 volt.

f. Set the Type 2A61 INPUT SELECTOR to —B.

g. The voltage measured between Q434 and Q534 collectors should be not more than 1 volt.

h. Remove the shorting lead from C437 terminals.

7. Adjust Collector Volts

a. Test equipment setup is given in step 5.

b. Set the voltmeter range to 8 volts, DC.

c. Connect the voltmeter common lead to the collector of Q434 (Fig. 6-10).

d. Connect the voltmeter positive lead to the emitter of Q434.

e. Adjust COLLECTOR VOLTS ADJ, Fig. 6-10, for 7 volts on the voltmeter.

f. Connect the voltmeter common lead to the collector of Q534.

g. Connect the voltmeter positive lead to the emitter of Q534.

h. Check for approximately 7 volts on the voltmeter.

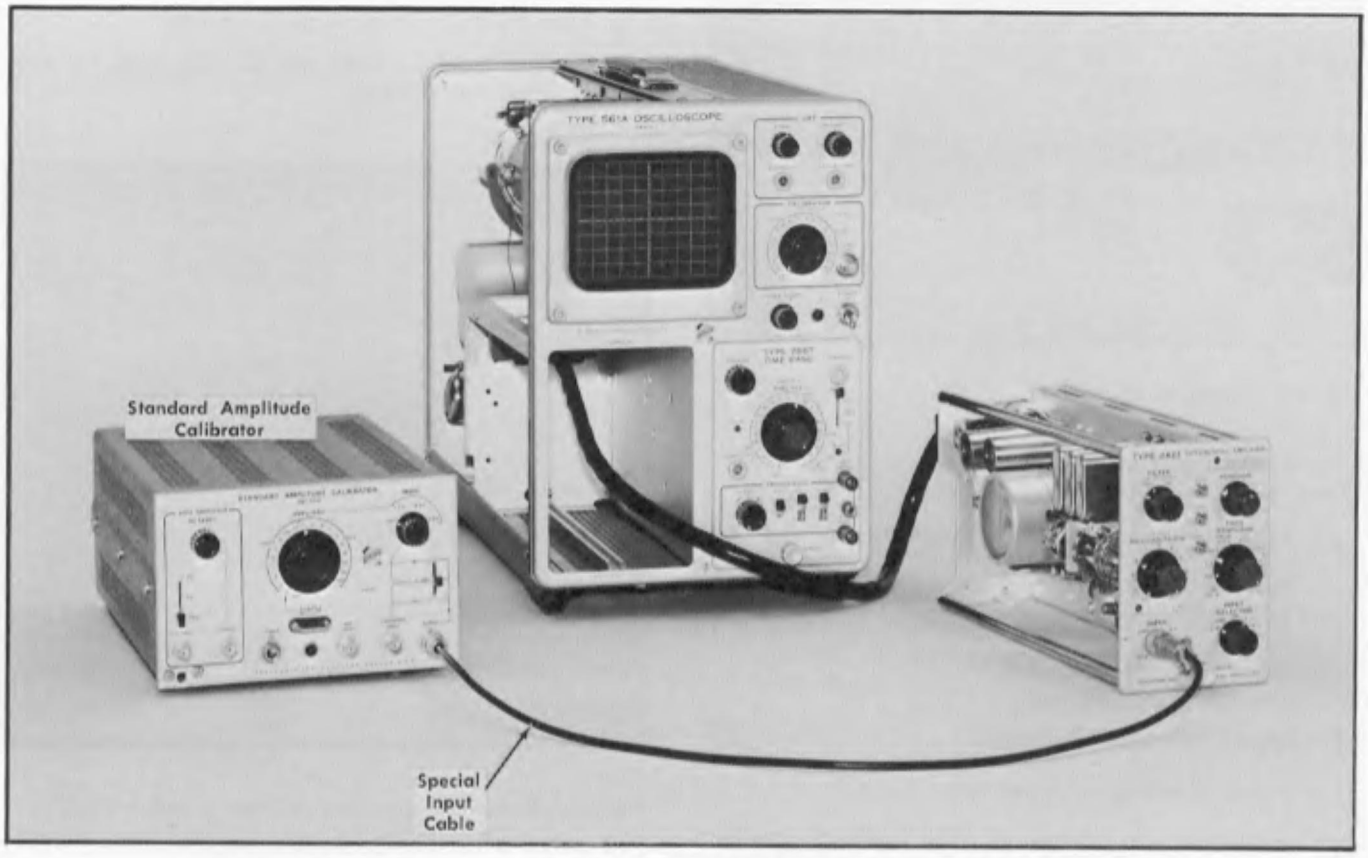

Fig. 6-11. Initial test equipment setup for steps 8 and 9.

Control Settings

Type 2A61

POSITION	Midrange
FREQ RESPONSE	
FROM	.6 ∿
TO	.3 MHz
INPUT SELECTOR	**A**
FILTER	OUT
MILLIVOLTS/DIV	**20**
VARIABLE	CALIB

Type 2B67

Position	Midrange
Time/div	1 ms
Variable	Calibrated
Pull 5× Mag	Pushed in
Mode	Norm
Level	Auto
Slope	+
Coupling	AC Slow
Source	Int

Standard Amplitude Calibrator

Amplitude	.1 volt
Mode	⊓⊔
Selector Switch	Up

8. Adjust Gain (Preset)

a. Test equipment setup is shown in Fig. 6-11.

b. Connect the Special Input Cable, 4 pin plug on one end and BNC on the other, from the Standard Amplitude Calibrator Output to the Type 2A61 INPUT.

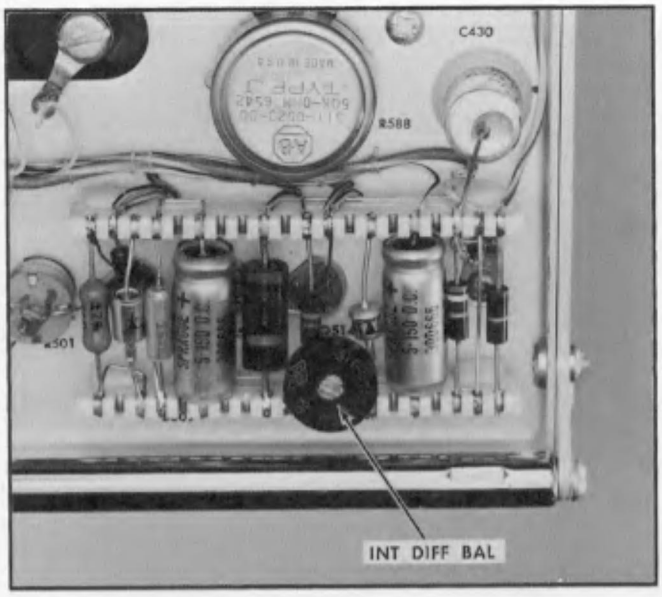

Fig. 6-12. Location of INT DIFF BAL control.

c. Set the front panel GAIN ADJUST control on the Type 2A61 for 5 divisions of display on the Type 561A CRT.

d. Remove the Special Input Cable from the Standard Amplitude Calibrator.

9. Adjust Diff Bal and Int Diff Bal (Low Frequency Common Mode Rejection) ◐

a. Test equipment setup is given in step 8.

b. Set the Type 2A61 INPUT SELECTOR to CM.

c. Set the Type 2A61 MILLIVOLTS/DIV to .05.

d. Set the Type 2B67 Time/div to 10 ms.

e. Adjust the front panel DIFF BAL control for minimum display amplitude on the Type 561A CRT.

g. Repeat steps e and f until the display amplitude is minimum. Maximum amplitude, not more than two divisions.

NOTES

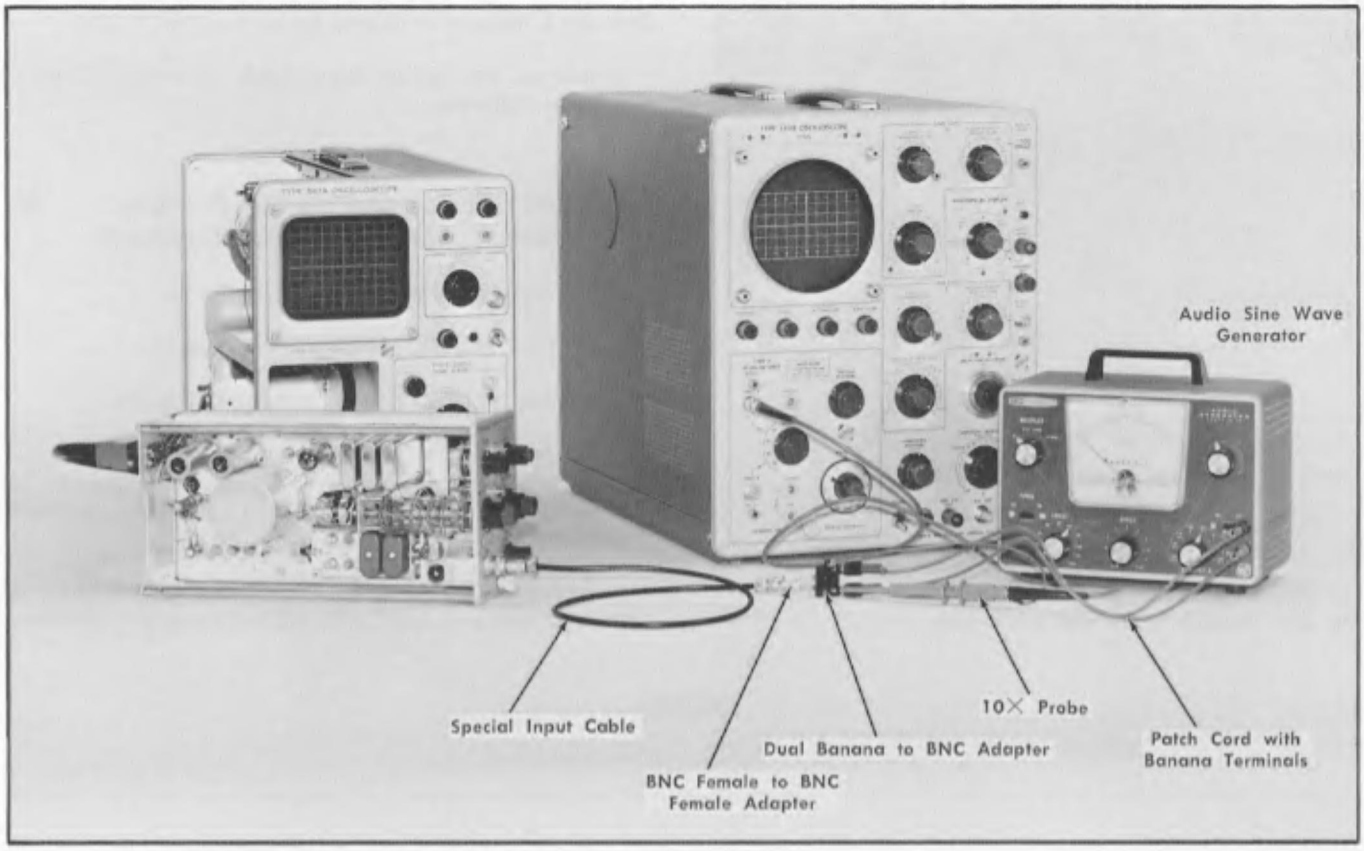

Fig. 6-13. Test equipment setup for step 10.

Control Settings

Type 2A61

POSITION	Midrange
FREQ RESPONSE	
FROM	.6 ∿
TO	.3 MHz
INPUT SELECTOR	**A—B**
FILTER	OUT
MILLIVOLTS/DIV	**.05**
VARIABLE	CALIB

Type 2B67

Position	Midrange
Time/div	**.1 ms**
Variable	Calibrated
Pull 5× Mag	Pushed in
Mode	Norm
Level	Auto
Slope	+
Coupling	AC Slow
Source	Int

Audio Generator

Frequency	10 kHz
Output	5 volts, p/p

Test Oscilloscope

Horiz Display	A
Magnifier	Off
Trig Mode	AC
Trig Slope	+ Int
Trig Level	Midrange
Stability	Midrange
Time/cm	50 μs
Variable	Calibrated

Type H Plug-In

Volts/cm	.1
Input Selector	A, AC
Position	Midrange

10. Adjust C424 and C524 (High Frequency Common Mode Rejection)

a. Test equipment setup is shown in Fig. 6-13.

b. Connect two patch cords with banana type terminals to the Audio Generator output terminals.

c. Connect a dual binding post to BNC Adapter to the patch cords.

d. Connect a BNC female to BNC female adapter to the BNC end of the dual binding post to BNC adapter.

e. Connect the Special Input Cable (4 pin connector on one end and BNC on the other) to the BNC female to BNC female adapter.

f. Connect the 10× Probe to Input A of the H Plug-In Unit in the test oscilloscope.

g. Connect the 10× probe tip to the red terminal of the dual binding post to BNC adapter.

h. Connect the 10× probe ground to the black terminal of the dual binding post to BNC adapter.

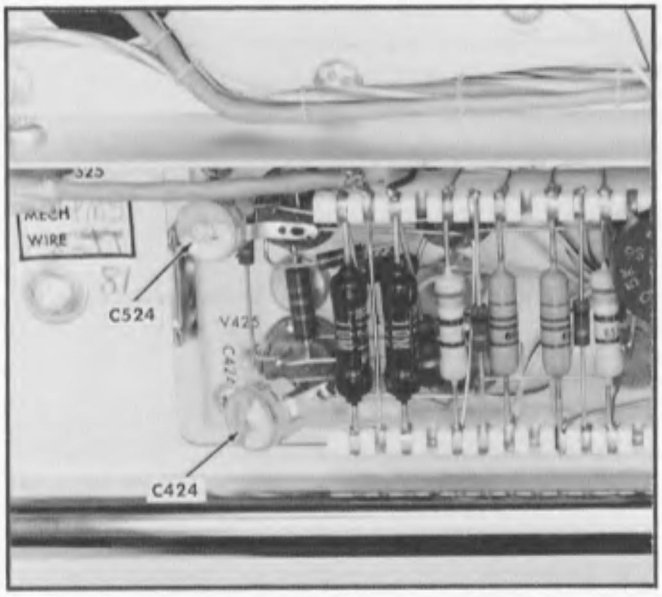

Fig. 6-14. Location of C424 and C524.

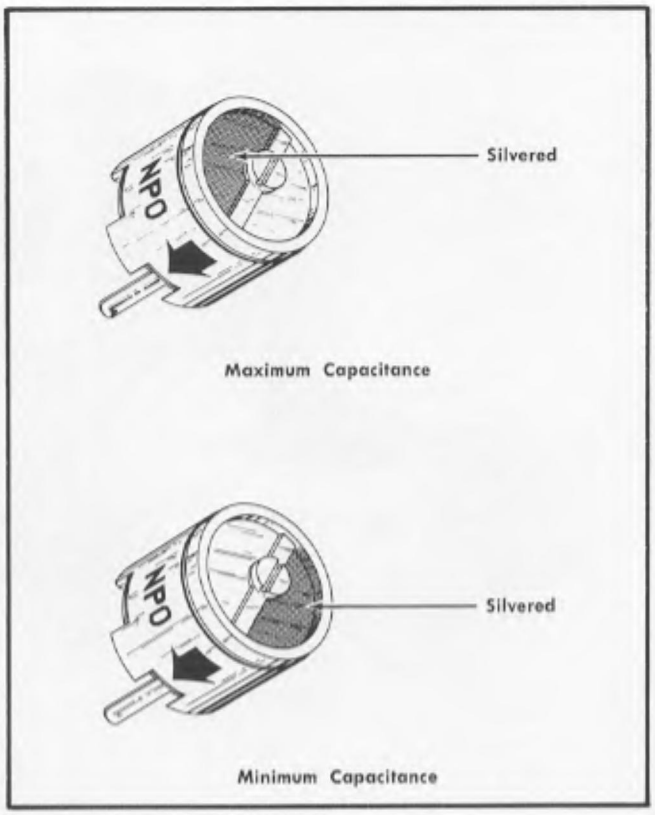

Fig. 6-15. Maximum and minimum capacitance settings of C424 and C524.

i. Adjust the output of the Audio Generator to 5 volts peak to peak displayed on the test oscilloscope.

j. Preset C424, Fig. 6-14, to maximum capacitance and C524, Fig. 6-14, to minimum capacitance as shown in Fig. 6-15.

k. Using a non-metallic screwdriver, adjust C424 and C524 for minimum deflection of the Type 561A display.

l. The maximum allowable deflection seen on the Type 561A CRT is two divisions. This corresponds to a 50,000:1 common mode rejection ratio. Any combination of C424 and C524 settings that achieve the desired results is acceptable.

NOTES

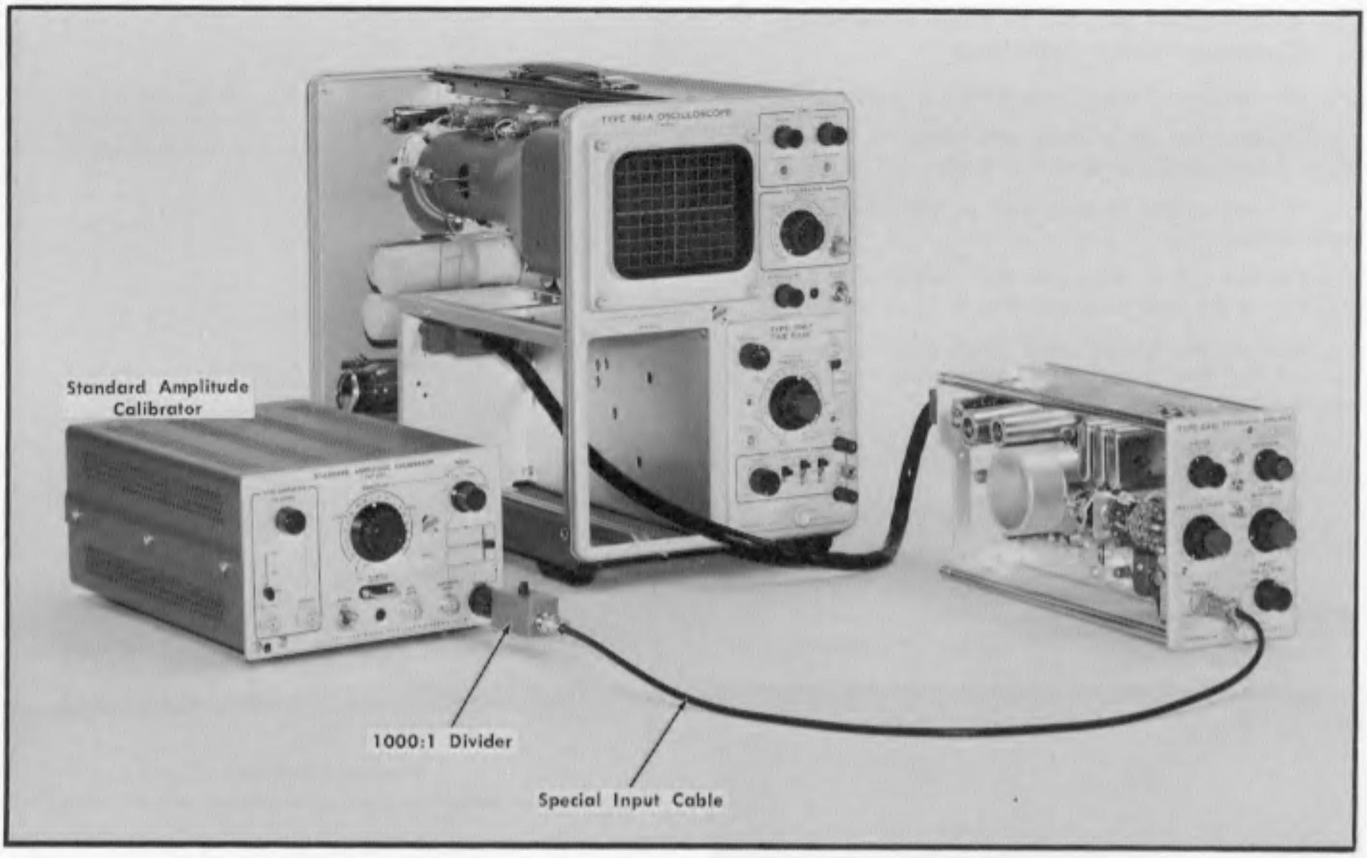

Fig. 6-16. Initial test equipment setup for step 11.

Control Settings

Type 2A61	
POSITION	Midrange
FREQ RESPONSE	
FROM	**.06 ∿**
TO	.3 MHz
INPUT SELECTOR	**A**
FILTER	OUT
MILLIVOLTS/DIV	**.5**
VARIABLE	CALIB

Type 2B67	
Position	Midrange
Time/div	**1 ms**
Variable	Calibrated
Pull 5× Mag	Pushed in
Mode	Norm
Level	Auto
Slope	+
Coupling	**AC Fast**
Source	Int

Standard Amplitude Calibrator	
Amplitude	**2 mV**
Mode	⊓⊔
Selector Switch	Up

11. Adjust Gain Tracking

a. Test equipment setup is shown in Fig. 6-16.

b. Connect the 1000:1 Divider to the Standard Amplitude Calibrator output.

c. Connect the Special Input Cable, with the 4 pin connector on one end and BNC connector on the other, to the 1000:1 divider.

d. Set the Type 2A61 mV/DIV switch to .5.

e. Set the Standard Amplitude Calibrator amplitude to 2 millivolts.

f. Set the 1000:1 divider to 1×.

g. Locate the trace on the Type 561A CRT.

h. Adjust the front panel GAIN ADJ control for approximately 4 divisions of display on the Type 561A CRT.

i. Switch the 1000:1 divider to 1000×.

j. Switch the Standard Amplitude Calibrator to .1 volt.

k. Switch the Type 2A61 mV/DIV switch to .02.

l. Adjust the GAIN ADJ for 5 divisions of display on the Type 561A CRT.

m. Switch the Type 2A61 mV/DIV switch to .5.

n. Switch the Standard Amplitude Calibrator amplitude to 2 mV. Switch the 1000:1 divider to 1×.

o. Adjust the Type 2A61 .01 mV GAIN control Fig. 6-17, for 4 divisions of display on the Type 561A CRT.

p. Switch the Type 2A61 mV/DIV switch to 20.

q. Switch the Standard Amplitude Calibrator amplitude to 100 mV.

r. Adjust the front panel GAIN ADJ control for 5 divisions of display on the Type 561A CRT.

s. Switch the Standard Amplitude Calibrator amplitude to 2 mV.

t. Switch the Type 2A61 mV/DIV switch to .5.

u. Adjust the Type 2A61 20 mV GAIN control, Fig. 6-17, for 4 divisions of display on the Type 561A CRT.

v. The three controls, .02 mV GAIN, 20 mV GAIN and the front panel GAIN ADJ, interact. Recheck steps j through w.

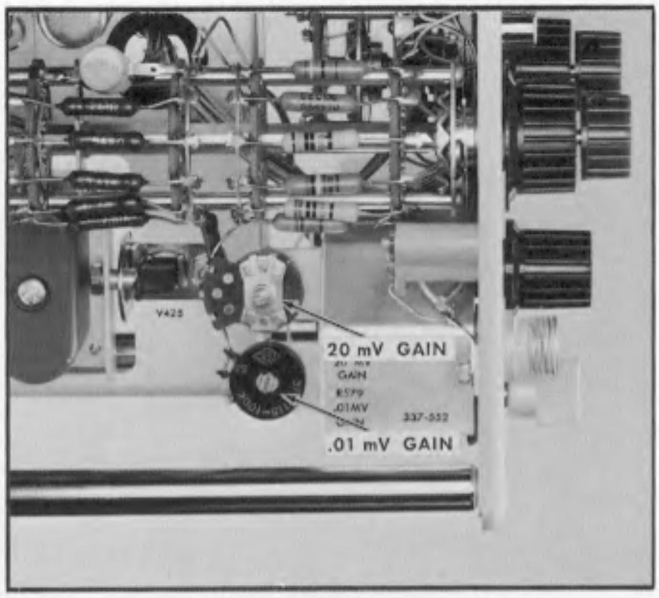

Fig. 6-17. Location of .01 mV GAIN and 20 mV GAIN controls.

The display should be within 3% of the required amplitude for each of the settings, 20 mV/DIV, .5 mV/DIV and .02 mV/DIV.

NOTES

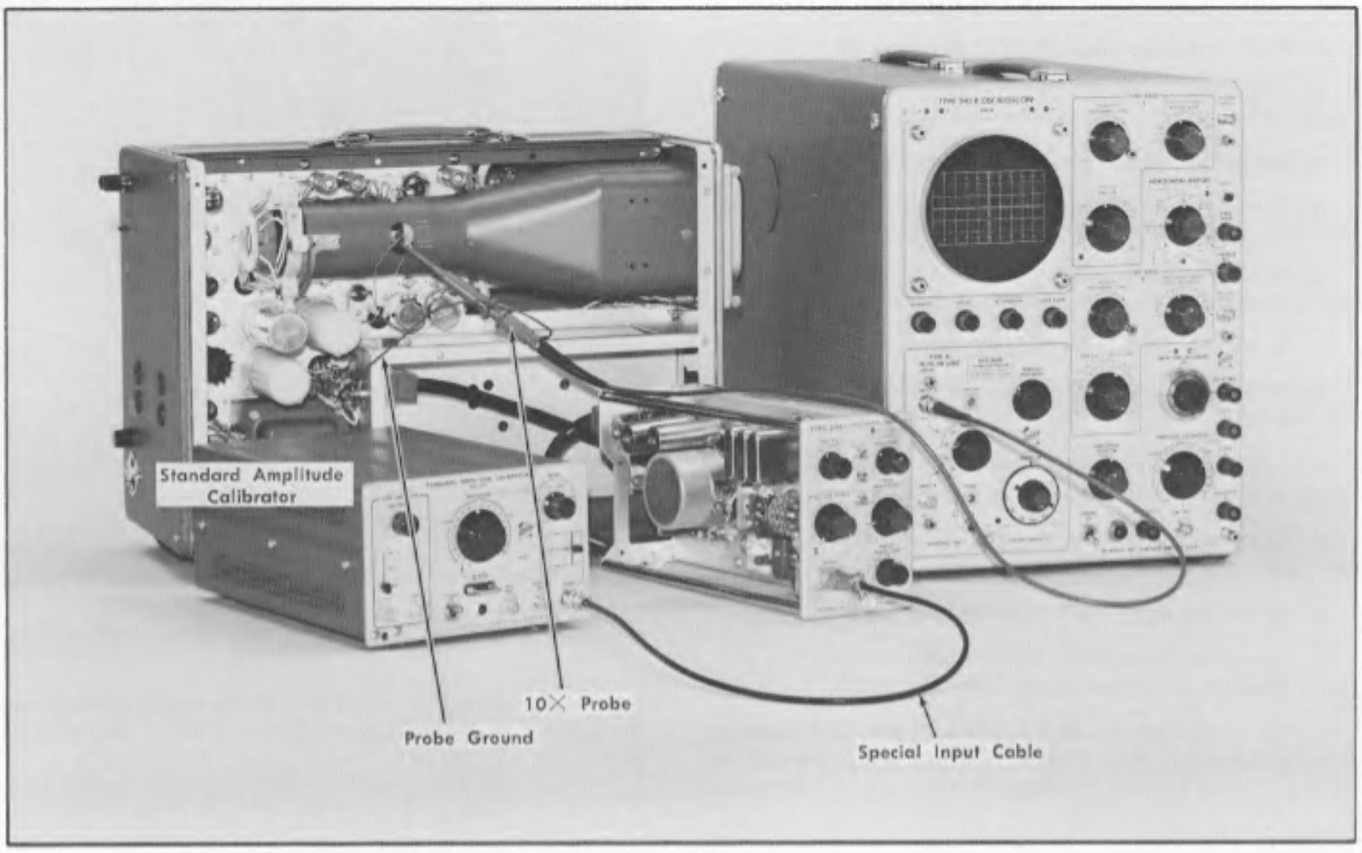

Fig. 6-18. Initial test equipment setup for steps 12 through 14.

Control Settings

Type 2A61

POSITION	Midrange
FREQ RESPONSE	
FROM	.06 ∿
TO	.3 MHz
INPUT SELECTOR	A
FILTER	OUT
MILLIVOLTS/DIV	**20**
VARIABLE	CALIB

Type 2B67

Position	Midrange
Time/div	**.5 ms**
Variable	Calibrated
Pull 5× Mag	Pushed in
Mode	Norm
Level	Auto
Slope	+
Coupling	**AC Slow**
Source	Int

Test Oscilloscope

Horiz Display	A
Magnifier	Off
Trig Mode	AC
Trig Slope	+ Int
Trig Level	**Stable Display**
Stability	**Stable Display**
Time/cm	**1 ms**
Variable	Calibrated

Type H Plug-In

Volts/cm	**1**
Input Selector	A, AC
Position	Midrange

Standard Amplitude Calibrator

Amplitude	**.1 volt**
Mode	⊓⊔
Selector Switch	Up

12. Check Gain Adjust Range

a. Test equipment setup is shown in Fig. 6-18.

b. Connect the Special Input Cable, 4 pin connector at one end and BNC connector at the other, from the Standard Amplitude Calibrator output to the Type 2A61 INPUT.

c. Adjust the Type 2A61 front panel GAIN ADJ control for 5 cm of display on the Type 561A CRT.

d. Connect the Test Oscilloscope 10× Probe to one of the vertical deflection plates on the 561A CRT.

e. Observe the amplitude of the deflection on the test oscilloscope CRT.

f. Double the observed amplitude and divide by 5 to obtain the vertical volts/div sensitivity of the CRT.

g. Check the GAIN ADJ control range as follows:

If the Vert Volts/Div sensitivity is:	Minimum GAIN ADJ range should be:
18.5	4.5 to 6.9 divisions
19.5	4.3 to 6.55 divisions
20.5	4.1 to 6.25 divisions

h. Reset the Type 2A61 GAIN ADJ control for exactly 5 cm of display on the Type 561A CRT.

13. Check mV/div Variable Ratio

a. Test equipment setup is given in Step 12.

b. Rotate the Type 2A61 Millivolts/Div VARIABLE control fully counterclockwise.

c. Check for not more than two divisions of display on the Type 561A CRT.

d. Note that the UNCAL neon on the Type 2A61 lights when the VARIABLE control is not in the CALIB position.

14. Check Position Range

a. Test equipment setup is given in Step 13.

b. Adjust the Millivolts/Div VARIABLE control for 4 divisions of display on the Type 561A CRT.

c. The Type 2A61 POSITION control must position the top of the display below the bottom graticule line when fully counterclockwise.

d. The Type 2A61 POSITION control must position the bottom of the display above the top graticule line when fully clockwise.

e. Return the Millivolts/Div VARIABLE control to CALIB and center the POSITION control.

f. Remove the Special Input Cable from the Standard Amplitude Calibrator.

NOTES

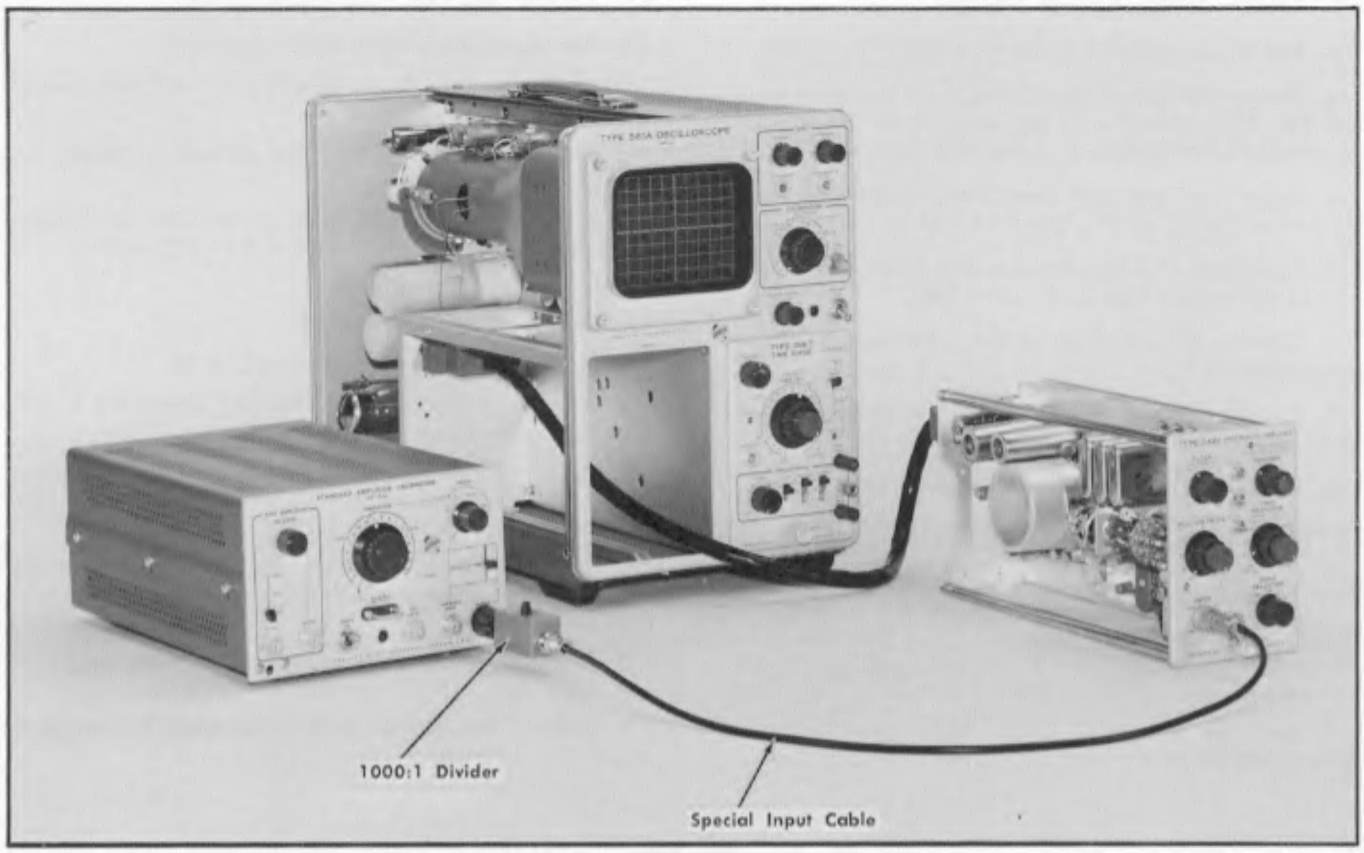

Fig. 6-19. Initial test equipment setup for step 15.

Control Settings

Type 2A61

POSITION	Midrange
FREQ RESPONSE	
FROM	.06 ∿
TO	.3 MHz
INPUT SELECTOR	A
FILTER	OUT
MILLIVOLTS/DIV	20
VARIABLE	CALIB

Type 2B67

Position	Midrange
Time/div	**1 ms**
Variable	Calibrated
Pull 5× Mag	Pushed in
Mode	Norm
Level	Auto
Slope	+
Coupling	**AC Fast**
Source	Int

Standard Amplitude Calibrator

Amplitude	**.1 volt**
Mode	⊓⊔
Selector Switch	Up

15. Check Millivolts/Division Switch Positions

a. Test equipment setup is shown in Fig. 6-19.

b. Connect the 1000:1 divider, set to ×1, to the Standard Amplitude Calibrator output.

c. Connect the Special Input Cable, 4 pin connector on one end and BNC on the other, to the output of the 1000:1 divider.

d. Observe 5 divisions, ±5% of display on the Type 561A CRT.

e. Switch the Standard Amplitude Calibrator amplitude switch to 50 millivolts.

f. Switch the Type 2A61 MILLIVOLTS/DIV switch to 10.

g. Observe 5 divisions, ±5% of display on the Type 561A CRT.

h. Check the Type 2A61 MILLIVOLTS/DIV switch positions through .05, switching the Standard Amplitude Calibrator simultaneously as follows:

mV/DIV Switch	Standard Amplitude Calibrator, mV	Divisions of Display
5	20	4, ±5%
2	10	5, ±5%
1	5	5, ±5%
.5	2	4, ±5%
.2	1	5, ±5%
.1	.5	5, ±5%
.05	.2	4, ±5%

i. Switch the 1000:1 divider to 1000×.

j. Switch the Type 2A61 mV/DIV switch to .02.

k. Switch the Standard Amplitude Calibrator to .1 VOLT.

l. Observe 5 divisions of display, ±5%, on the Type 561A CRT.

m. Switch the Type 2A61 MILLIVOLTS/DIV switch to .01.

n. Switch the Standard Amplitude Calibrator to 50 mV.

o. Observe 5 divisions, ±5%, of display on the Type 561A CRT.

NOTES

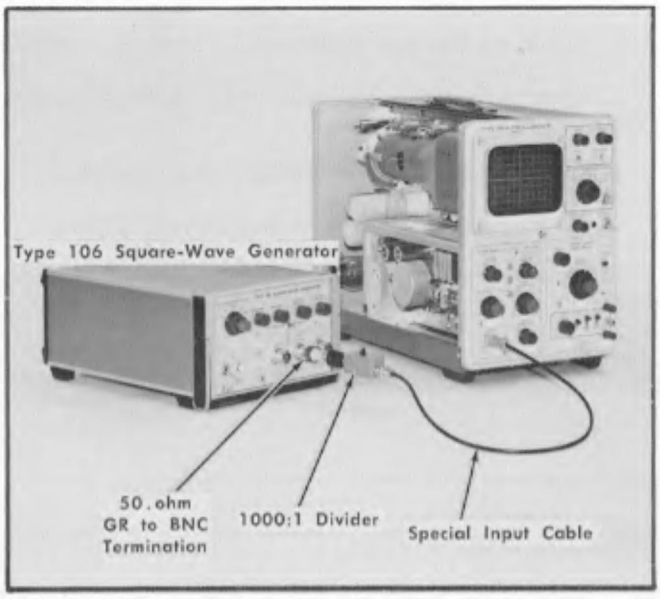

Fig. 6-20. Initial test equipment setup for steps 16 through 18.

Control Settings

Type 2A61

POSITION	Midrange
FREQ RESPONSE	
FROM	.06 ∿
TO	.3 MHz
INPUT SELECTOR	A
FILTER	OUT
mV/DIV	20
VARIABLE	CALIB

Type 2B67

Position	Midrange
Time/div	**50 μs**
Variable	Calibrated
Pull 5× Mag	Pushed in
Mode	Norm
Level	Auto
Slope	+
Coupling	AC Fast
Source	Int

Square Wave Generator

Repetition Rate Range	10 kHz
Multiplier	1
Hi Amplitude-Fast Rise	Fast Rise
+ Transition Amplitude	Clockwise
Symmetry	Midrange

16. Adjust Millivolts/Div Compensation

a. Test equipment setup is shown in Fig. 6-20.

b. Remove the flexible extender cable and plug the Type 2A61 directly into the Type 561A plug-in compartment.

c. Remove the cover from the left side of the Type 561A to gain access to C470F, on the left side front of the Type 2A61. See Fig. 6-21.

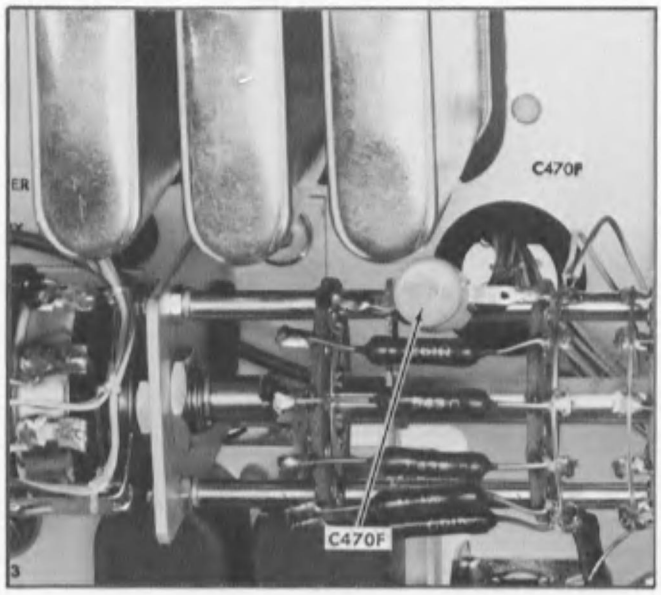

Fig. 6-21. Location of C470F.

d. Connect the 50 Ω, 2 watt terminating resistor to the Square Wave Generator + Fast Rise Output.

e. Connect a BNC female to BNC female adapter to the 50 Ω, 2 watt termination.

f. Connect the 1000:1 Divider to the BNC female to BNC female adapter.

g. Connect the Special Input Cable, with the 4 pin connector on one end and the BNC connector on the other, to the 1000:1 Divider. Set the divider switch to ×1.

h. Connect the BNC connector end of the Special Input Cable to the Type 2A61 INPUT.

i. Adjust the Square Wave Generator + Transition Amplitude for 7 divisions of display on the Type 561A CRT.

j. Adjust C470F, Fig. 6-21, for the best square wave reponse. Correct adjustment of C470F, is shown in Fig. 6-22A. Incorrect adjustment of C470F is shown in Fig. 6-22B.

17. Check Upper Frequency Response

a. Test equipment setup is given in Step 16.

b. Switch the Type 2B67 Time/div switch to 5 μs.

c. Pull the Type 2B67 Pull 5× Mag knob.

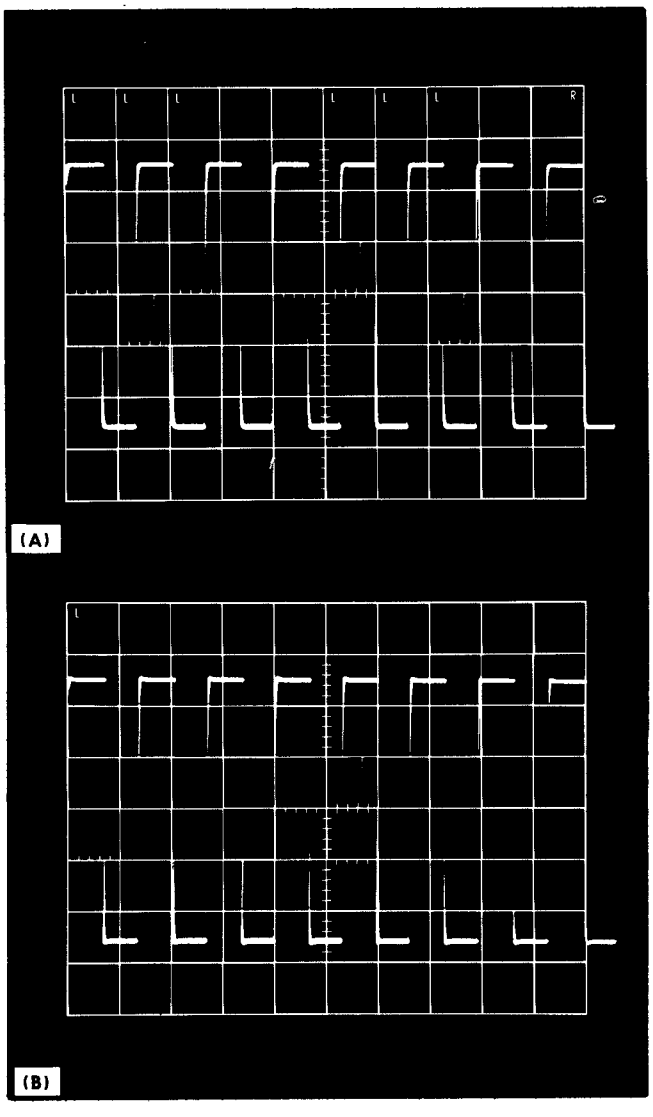

Fig. 6-22. Typical CRT display showing (A) Correct adjustment of C470F. (B) Incorrect adjustment of C470F.

d. Set the Square Wave Generator Repetition Rate Range Multiplier to 2.5 (25 kHz).

e. Locate the trace on the Type 561A CRT.

f. Adjust the Square Wave Generator + Transition Amplitude for 8 divisions of display on the Type 561A CRT.

g. Measure the risetime from the 10% to 90% amplitude points. See Fig. 6-23. Maximum risetime, 1.2 μs. (Indicated time/div is divided by 5 when the 5× Mag knob is pulled out.)

h. Switch the 1000:1 Divider to 1000×.

i. Switch the Type 2A61 mV/DIV switch to .02.

j. Switch the FREQUENCY RESPONSE FROM switch to 600 ∿.

k. Measure the risetime from the 10% to 90% amplitude points. See Fig. 6-24. Risetime, $\leq$ 3.5 μs.

l. Switch the FREQUENCY RESPONSE FROM switch to .06 ∿.

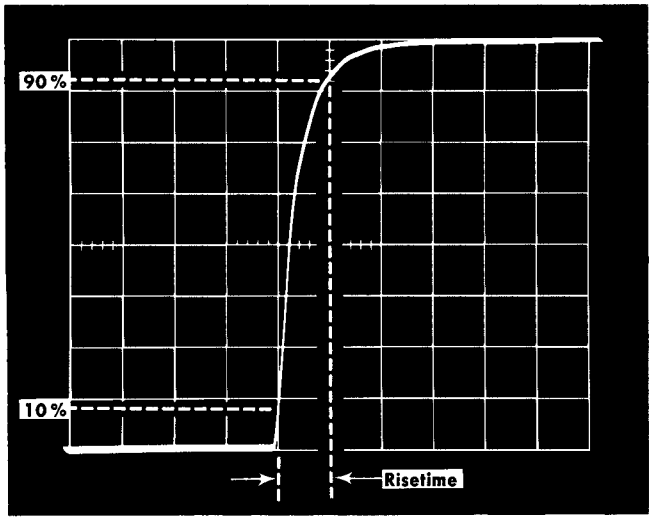

Fig. 6-23. Typical display of risetime for step 17g.

18. Check Upper Frequency Limited Response

a. Test equipment setup is given in Step 16.

b. Set the Type 2A61 FREQUENCY RESPONSE TO switch to 60 kHz.

c. Switch the Type 2A61 mV/DIV switch to 20.

d. Locate the display on the Type 561A CRT.

e. Switch the Type 2B67 Time/div to 20 μs.

f. Measure the risetime from the 10% to 90% amplitude points.

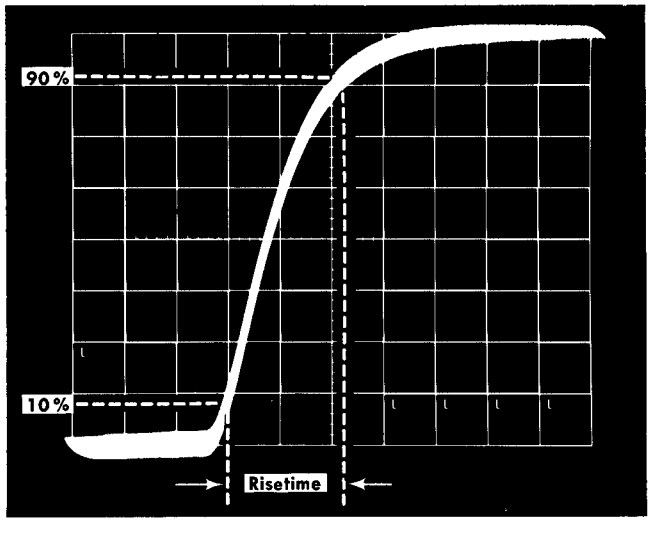

Fig. 6-24. Typical CRT display of risetime for step 17k.

g. Measured risetime should be within the range, 4.5 to 8.3 μs.

h. Push in the Pull 5× Mag knob.

i. Check the risetimes for the remaining Frequency Response TO positions, as follows:

FREQ RESPONSE TO	Type 2B67 Time/div	Square Wave Gen Frequency	Measured Risetime
6 kHz	50 μs	2.5 kHz	45 to 83 μs
600 ∿	.5 ms	250 Hz	.45 to .83 ms
60 ∿	5 ms	25 Hz	4.5 to 8.3 ms

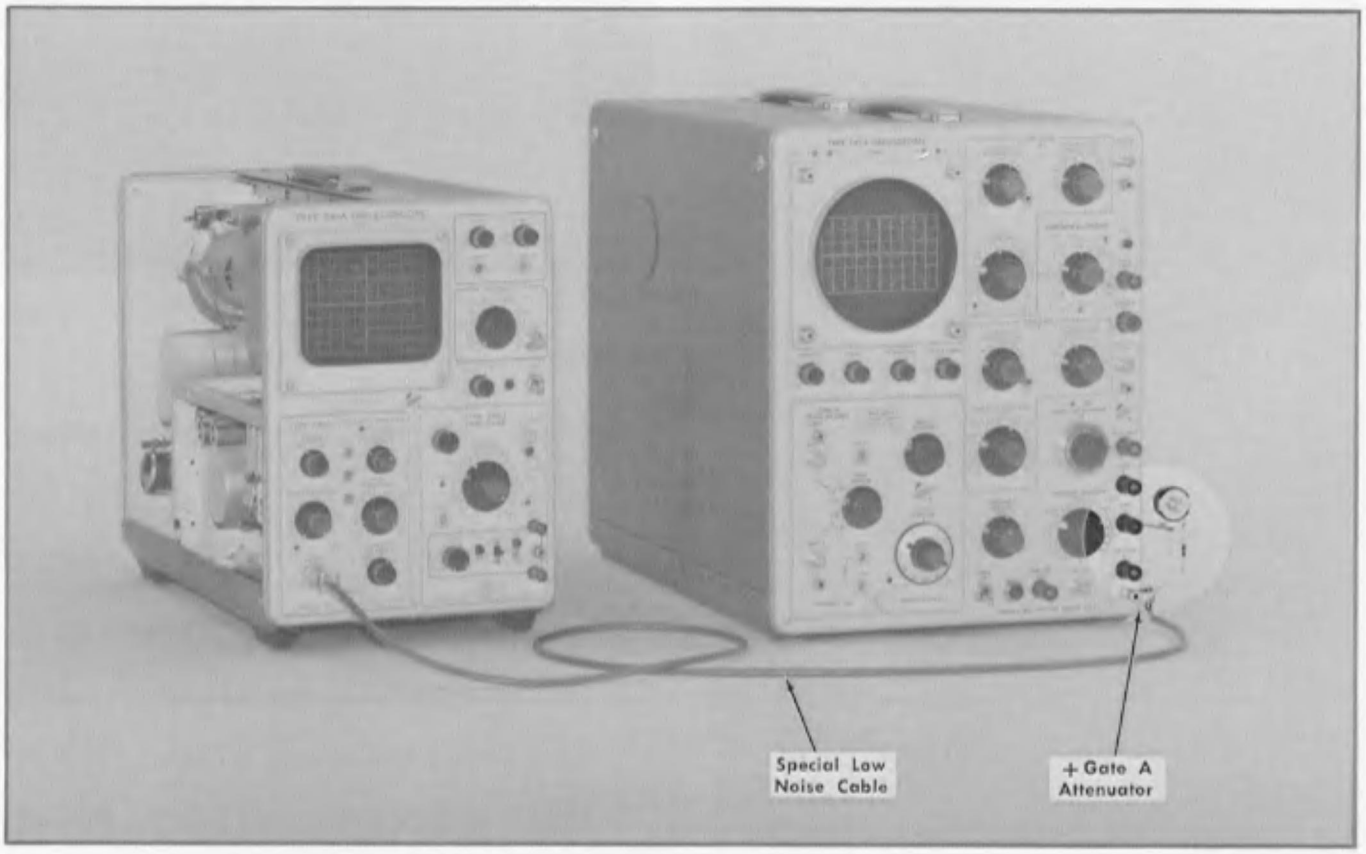

Fig. 6-25. Initial test equipment setup for step 19.

Control Settings

Type 2A61

POSITION	Midrange
FREQ RESPONSE	
FROM	600 ∿
TO	.3 MHz
INPUT SELECTOR	A
FILTER	OUT
MILLIVOLTS/DIV	20
VARIABLE	CALIB

Type 2B67

Position	Midrange
Time/div	**.2 ms**
Variable	Calibrated
Pull 5× Mag	Pushed in
Mode	Norm
Level	**Stable Trace**
Slope	+
Coupling	AC Fast
Source	Int

Test Oscilloscope

Horiz Display	**'B' Intensified by 'A'**
Magnifier	Off
Trig Mode, A Sweep	AC
Trig Slope, A Sweep	+ Int
Trig Level, A Sweep	**Clockwise**
Stability, A Sweep	**Clockwise**
Time/cm, A Sweep	**.2 ms**
Variable, A Sweep	Calibrated
Trig Mode, B Sweep	**AC**
Trig Slope, B Sweep	**+ Int**

Trig Level, B Sweep	**Clockwise**
Stability, B Sweep	**Clockwise**
Time/cm, B Sweep	**.5 ms**
Variable, B Sweep	**Calibrated**

Type H Plug-In

Volts/cm	1
Input Selector	A, AC
Position	Midrange

19. Check Lower Frequency Limited Response

a. Test equipment setup is shown in Fig. 6-25.

b. Connect the gate attenuator suggested in Fig. 6-26, between the + Gate A and Gnd on the Type 545B Test Oscilloscope. Shown connected to the test oscilloscope in Fig. 6-25.

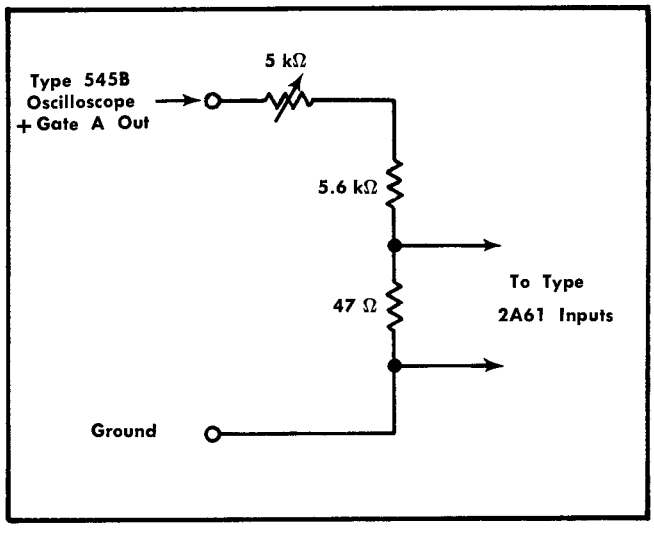

Fig. 6-26. Diagram of suggested + Gate attenuator.

c. Connect the Special Low Noise Cable to the 4 pin INPUT connector on the Type 2A61.

d. Connect both shielded pairs of the Low Noise Input Cable across the 50 Ω resistor of the special gate attenuator, as shown in Fig. 6-25.

e. Set the Type 2B67 Triggering Level for a stable display on the Type 561A CRT.

f. Position the bottom of the display on the Type 561A to the bottom graticule line, using the Type 2A61 POSITION conrol.

g. Adjust the 5 kΩ variable resistance in the special gate attenuator for 8 divisions of display.

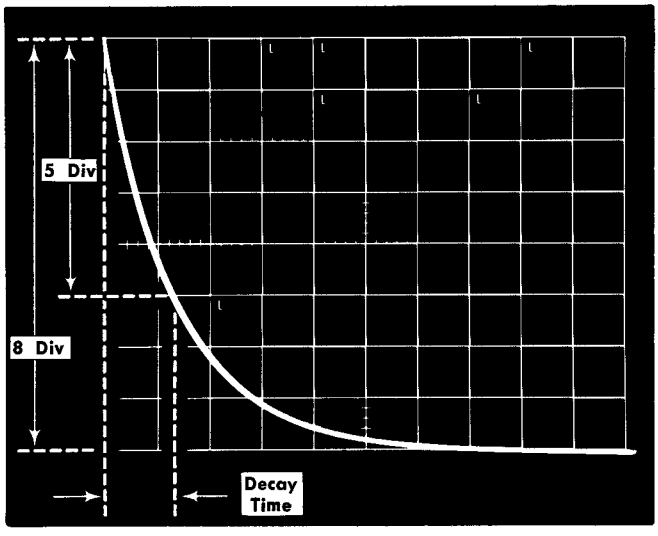

Fig. 6-27. Typical CRT display of decay time.

h. Position the start of the trace as shown in Fig. 6-27, using the Type 2B67 Position control and the Type 2A61 POSITION control.

i. Measure the decay time of the display as shown in Fig. 6-27.

j. Using the following table, check the decay time for each of the FREQUENCY RESPONSE FROM switch positions.

FREQ RESPONSE FROM	2B67 Time/Div	A Sweep Time/cm	B Sweep Time/cm	Decay Time
600 ∿	.2 ms	.2 ms	.5 ms	.21 to .37 ms
60 ∿	2 ms	2 ms	5 ms	2.1 to 3.7 ms
6 ∿	20 ms	20 ms	50 ms	21 to 37 ms
.6 ∿	.2 s	.2 s	.5 s	.21 to .37 s

NOTE

For each new setting of the Frequency Response FROM switch and Type 545B test oscilloscope time bases, adjust the special gate attenuator for 8 divisions of display on the Type 561A CRT.

k. Set the Frequency Response FROM switch to .06 ∿.

l. Set the Type 2B67 Time/Div to 1 s.

m. Set the Type 545B Test Oscilloscope Horizontal Display to Single Sweep.

n. Set the Type 545B Test Oscilloscope Time Base A Time/cm to 1 s.

o. Push the Reset button on the Type 545B Test Oscilloscope and measure the decay time of the sweep display on the Type 561A CRT. Decay time, 2.45 to 3.75 s.

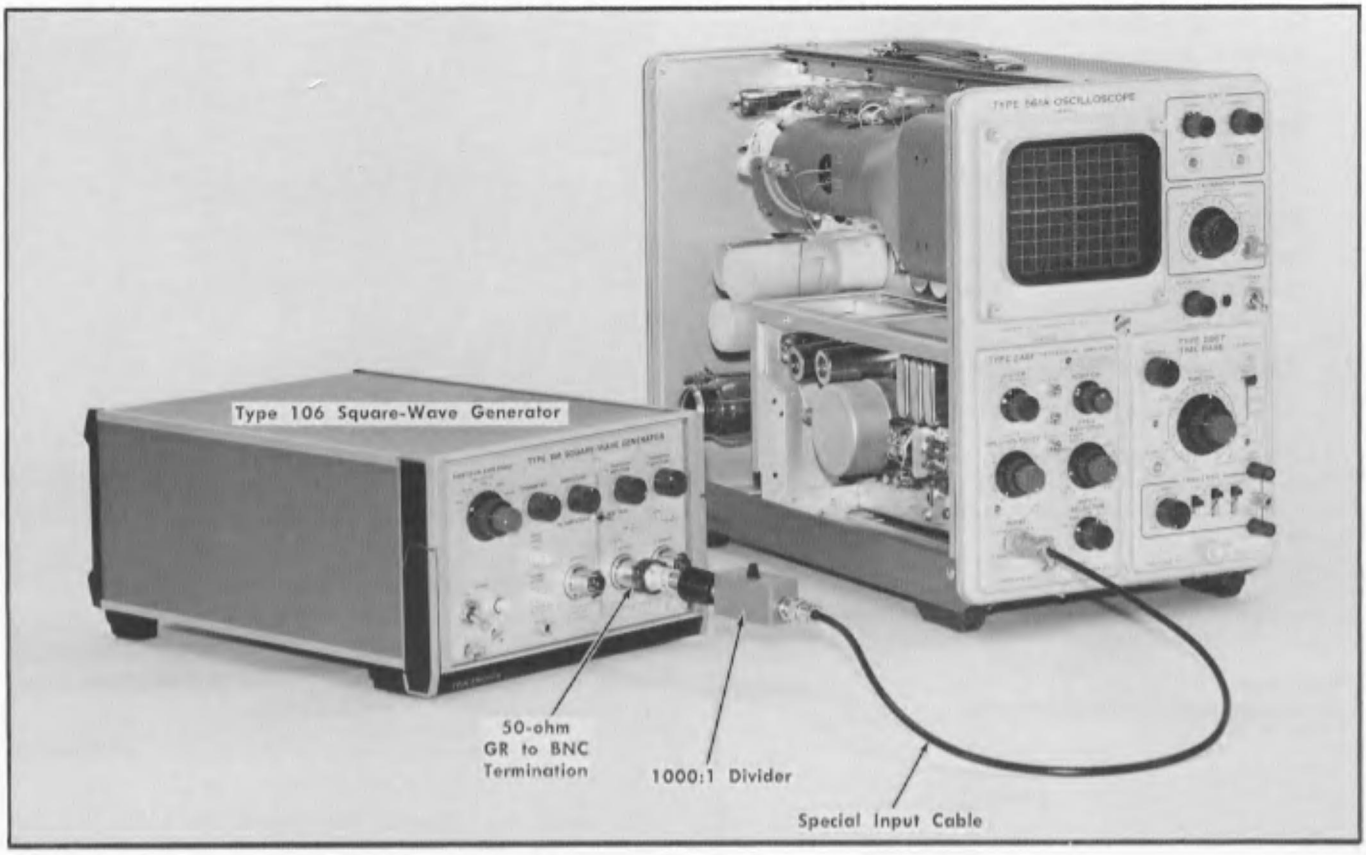

Fig. 6-28. Test equipment setup for alternate method of checking Low Frequency Limited Response.

Control Settings

Type 2A61

POSITION	Midrange
FREQ RESPONSE	
FROM	.06 ∿
TO	.1-.3 MHz
INPUT SELECTOR	A
FILTER	OUT
MILLIVOLTS/DIV	20
VARIABLE	CALIB

Type 2B67

Position	Midrange
Time/div	5 ms
Variable	Calibrated
Pull 5× Mag	Pushed in
Mode	Norm
Level	Midrange
Slope	+
Coupling	AC Fast
Source	Int

19A. Check Lower Frequency Limited Response (Alternate Method)

a. Test equipment setup is shown in Fig. 6-28.

b. Connect a GR to BNC 50 Ω termination to the Type 106 Square-Wave Generator + Fast Rise Output.

c. Connect a BNC female to BNC female adapter to the GR to BNC termination.

d. Connect the BNC end of the Special Input Cable (with BNC connector on one end and the 4 pin connector on the other) to the BNC female to BNC female adapter.

e. Connect the 4 pin connector end of the Special Input Cable to the Type 2A61 INPUT. (INPUT SELECTOR to A.)

f. Set the Type 106 Square-Wave Generator Hi Ampli-Fast Rise switch to Fast Rise.

g. Set the Type 106 Square-Wave Generator Repetition Rate Range switch to 10 Hz and the Multiplier to 2.

h. Adjust the Type 106 Square-Wave Generator + Transition Amplitude for approximately 4 cm of vertical display. See Fig. 6-29, waveform a.

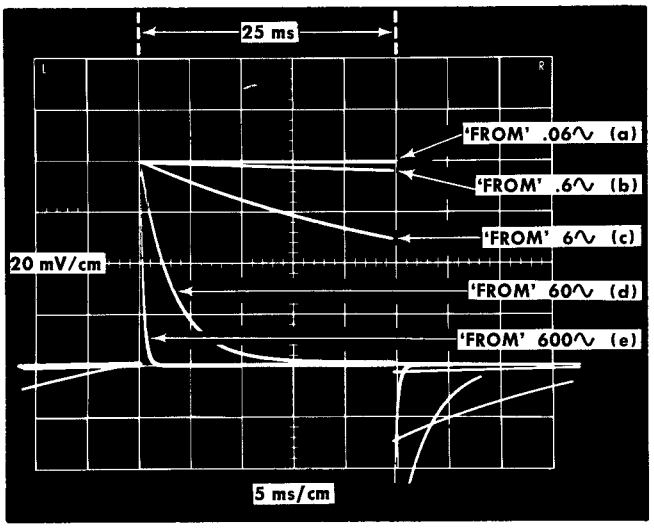

Fig. 6-29. Multiple exposure photograph showing decay characteristics for FREQ RESPONSE 'FROM' switch positions .06∿ through 600∿.

i. Adjust the Type 106 Square-Wave Generator Repetition Rate Multiplier for 5 cm of horizontal display. See Fig. 6-29, waveform a.

Use the Type 2A61 POSITION control as necessary to position the start of the transition to the same point on the graticule for each subsequent step.

j. Switch the Type 2A61 FREQ RESPONSE FROM switch to .6 ∿.

k. Observe the displayed waveform. Check for similarity to the waveform b in Fig. 6-29.

l. Switch through the FREQ RESPONSE FROM switch positions, 6 ∿ through 600 ∿ and check the displayed waveforms against c, d and e, Fig. 6-29 for low frequency response characteristics.

NOTES

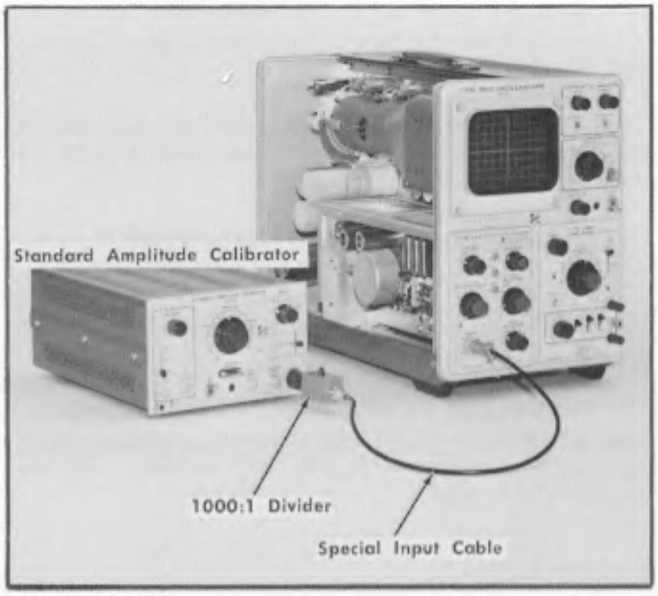

Fig. 6-30. Initial test equipment for step 20.

Control Settings

Type 2A61	
POSITION	Midrange
FREQ RESPONSE	
FROM	**.6 ∿**
TO	.3 MHz
INPUT SELECTOR	A
FILTER	OUT
MILLIVOLTS/DIV	20
VARIABLE	CALIB
Type 2B67	
Position	Midrange
Time/div	**Calibrated**
Pull 5× Mag	Pushed in
Mode	Norm
Level	**Auto**
Slope	+
Coupling	AC Fast
Source	Int

Standard Amplitude Calibrator	
Amplitude	.1 volt
Mode	DC
Selector Switch	Up position

20. Check Trace Restorer

a. Test equipment setup is shown in Fig. 6-30.

b. Connect the BNC end of the Special Input Cable, (with the 4 pin connector on one end and the BNC connector on the other), to the Standard Amplitude Calibrator output.

c. Connect the 4 pin connector end of the Special Input Cable to the Type 2A61 INPUT.

d. Locate the trace on the Type 561A CRT.

e. Center the trace vertically using the Type 2A61 POSITION control.

f. Switch the Type 2A61 INPUT SELECTOR to —B.

g. Note that the trace indicator neon lights and then extinguishes as the trace returns to the Type 561A CRT graticule area.

h. Allow the trace to return to the graticule center.

i. Switch the INPUT SELECTOR to A.

j. Note that the trace indicator neon lights and then extinguishes as the trace returns to the Type 561A CRT graticule area.

k. Switch the Standard Amplitude Calibrator Mode to ⊓⊔.

l. Observe 5 divisions of display on the Type 561A CRT.

m. Push the Trace Restorer button (the red button concentric with the POSITION knob).

n. Note that the square wave display disappears into a straight line.

o. Release the Trace Restorer button and note that the square wave display returns.

NOTES

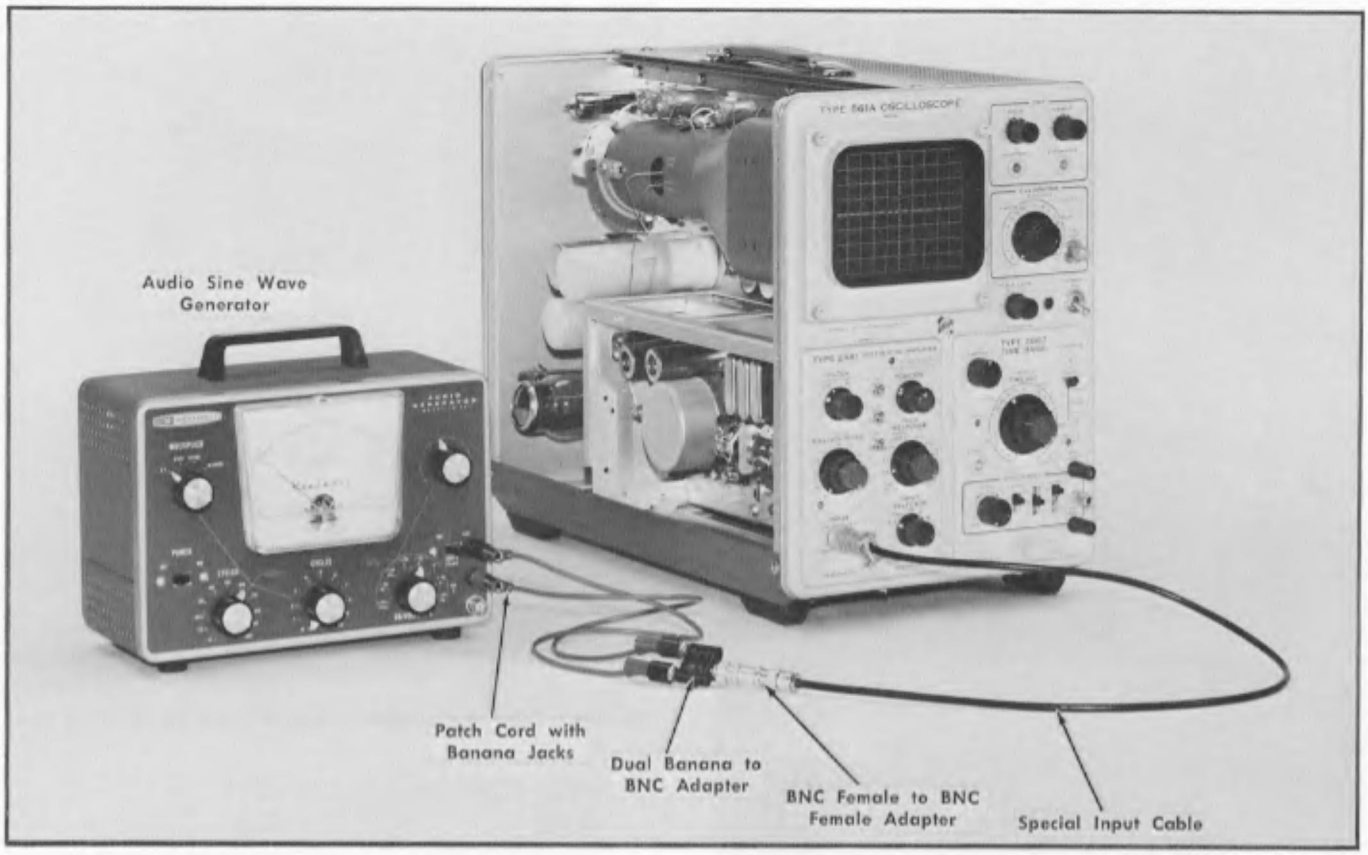

Fig. 6-31. Initial test equipment setup for step 21.

Control Settings

Type 2A61	
POSITION	Midrange
FREQ RESPONSE	
FROM	.6 ∿
TO	.3 MHz
INPUT SELECTOR	A
FILTER	OUT
MILLIVOLTS/DIV	20
VARIABLE	CALIB
Type 2B67	
Position	Midrange
Time/div	**10 ms**
Variable	Calibrated
Pull 5× Mag	Pushed in
Mode	Norm
Level	Auto
Slope	+
Coupling	AC Slow
Source	Int

Audio Sine Wave Generator	
Frequency	60 Hz[1]
Amplitude	100 mVolts

21. Check Line Filter

a. Test equipment setup is shown in Fig. 6-31.

b. Connect two patch cords with banana type terminals from the Audio Sine Wave Generator Output jacks to the jacks on the dual binding post to BNC adapter.

c. Connect a BNC female to BNC female adapter to the BNC end of the dual binding post to BNC adapter.

d. Connect the Special Input Cable, with the 4 pin connector on one end and the BNC connector on the other, to the BNC female to BNC female adapter.

e. Locate the trace on the Type 561A CRT.

[1]For Type 2A61 having 60 Hz line filter. Type 2A61 is available with 50 or 400 Hz line filter.

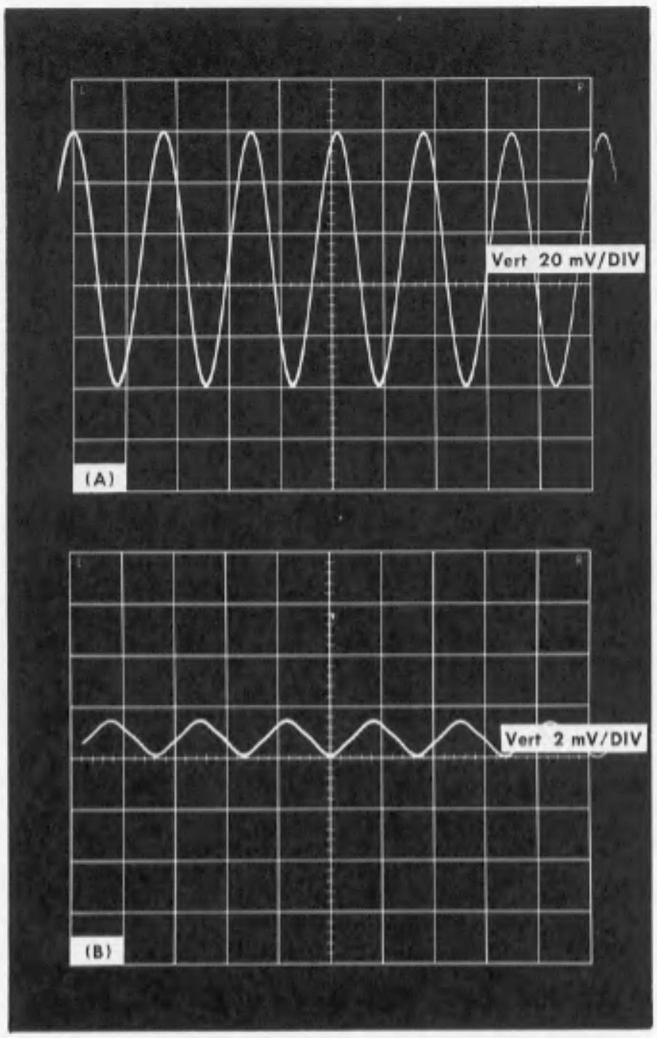

Fig. 6-32. Typical display for step 21. (A) FILTER OUT, (B) FILTER IN.

f. Adjust the Audio Sine Wave Generator Amplitude control for a display of 5 divisions on the Type 561A CRT. See Fig. 6-32.

g. Switch the Type 2A61 FILTER to IN.

h. Switch the Type 2A61 MILLIVOLTS/DIV switch to 2.

i. Check for not more than one division of display on the Type 561A CRT. See Fig. 6-32B.

j. Switch the Type 2A61 FILTER switch to OUT.

Control Settings

Type 2A61

POSITION	Midrange
FREQ RESPONSE	
FROM	600 ∿
TO	60 ∿

Fig. 6-33. Initial test equipment setup for step 22.

INPUT SELECTOR	GND
FILTER	OUT
MILLIVOLTS/DIV	.01
VARIABLE	CALIB

Type 2B67

Position	Midrange
Time/div	10 ms
Variable	Calibrated
Pull 5× Mag	Pushed in
Mode	Norm
Level	Free Run
Slope	+
Coupling	AC
Source	Int

22. Check Hum and Noise

a. Test equipment setup is shown in Fig. 6-33.

b. Set the Type 2A61 FREQUENCY RESPONSE FROM control to .06 ∿.

c. Set the Type 2A61 FREQUENCY RESPONSE TO control to .3 MHz.

d. Noise peaks should not exceed .02 millivolts, 2 divisions, other than occasionally (a few times per second).

ABBREVIATIONS AND SYMBOLS

A or amp	amperes
AC or ac	alternating current
AF	audio frequency
α	alpha—common-base current amplification factor
AM	amplitude modulation
$\approx$	approximately equal to
β	beta—common-emitter current amplification factor
BHB	binding head brass
BHS	binding head steel
BNC	baby series "N" connector
$\times$	by or times
C	carbon
C	capacitance
cap.	capacitor
cer	ceramic
cm	centimeter
comp	composition
conn	connector
$\sim$	cycle
c/s or cps	cycles per second
CRT	cathode-ray tube
csk	countersunk
Δ	increment
dB	decibel
dBm	decibel referred to one milliwatt
DC or dc	direct current
DE	double end
$^\circ$	degrees
$^\circ$C	degrees Celsius (degrees centigrade)
$^\circ$F	degrees Fahrenheit
$^\circ$K	degrees Kelvin
dia	diameter
$\div$	divide by
div	division
EHF	extremely high frequency
elect.	electrolytic
EMC	electrolytic, metal cased
EMI	electromagnetic interference (see RFI)
EMT	electrolytic, metal tubular
ε	epsilon—2.71828 or % of error
$\geq$	equal to or greater than
$\leq$	equal to or less than
ext	external
F or f	farad
F & I	focus and intensity
FHB	flat head brass
FHS	flat head steel
Fil HB	fillister head brass
Fil HS	fillister head steel
FM	frequency modulation
ft	feet or foot
G	giga or 10^9
g	acceleration due to gravity
Ge	germanium
GHz	gigohertz
GMV	guaranteed minimum value
GR	General Radio
$>$	greater than
H or h	henry
h	height or high
hex.	hexagonal
HF	high frequency
HHB	hex head brass
HHS	hex head steel
HSB	hex socket brass
HSS	hex socket steel
HV	high voltage
Hz	hertz (cycles per second)
ID	inside diameter
IF	intermediate frequency
in.	inch or inches
incd	incandescent
∞	infinity
int	internal
$\int$	integral
k	kilohms or kilo (10^3)
k Ω	kilohm
kc	kilocycle
kHz	kilohertz
L	inductance
λ	lambda—wavelength
$\gg$	large compared with
$<$	less than
LF	low frequency
lg	length or long
LV	low voltage
M	mega or 10^6
m	milli or 10^{-3}
MΩ or meg	megohm
μ	micro or 10^{-6}
mc	megacycle
met.	metal
MHz	megahertz
mm	millimeter
ms	millisecond
—	minus
mtg hdw	mounting hardware
n	nano or 10^{-9}
no. or #	number
ns	nanosecond
OD	outside diameter
OHB	oval head brass
OHS	oval head steel
Ω	omega—ohms
ω	omega—angular frequency
p	pico or 10^{-12}
/	per
%	percent
PHB	pan head brass
ϕ	phi—phase angle
π	pi—3.1416
PHS	pan head steel
$+$	plus
$\pm$	plus or minus
PIV	peak inverse voltage
plstc	plastic
PMC	paper, metal cased
poly	polystyrene
prec	precision
PT	paper, tubular
PTM	paper or plastic, tubular, molded
pwr	power
Q	figure of merit
RC	resistance capacitance
RF	radio frequency
RFI	radio frequency interference (see EMI)
RHB	round head brass
ρ	rho—resistivity
RHS	round head steel
r/min or rpm	revolutions per minute
RMS	root mean square
s or sec.	second
SE	single end
Si	silicon
SN or S/N	serial number
$\ll$	small compared with
T	tera or 10^{12}
TC	temperature compensated
TD	tunnel diode
THB	truss head brass
θ	theta—angular phase displacement
thk	thick
THS	truss head steel
tub.	tubular
UHF	ultra high frequency
V	volt
VAC	volts, alternating current
var	variable
VDC	volts, direct current
VHF	very high frequency
VSWR	voltage standing wave ratio
W	watt
w	wide or width
w/	with
w/o	without
WW	wire-wound
xmfr	transformer

PARTS ORDERING INFORMATION

Replacement parts are available from or through your local Tektronix, Inc. Field Office or representative.

Changes to Tektronix instruments are sometimes made to accommodate improved components as they become available, and to give you the benefit of the latest circuit improvements developed in our engineering department. It is therefore important, when ordering parts, to include the following information in your order: Part number, instrument type or number, serial or model number, and modification number if applicable.

If a part you have ordered has been replaced with a new or improved part, your local Tektronix, Inc. Field Office or representative will contact you concerning any change in part number.

SPECIAL NOTES AND SYMBOLS

×000	Part first added at this serial number
00×	Part removed after this serial number
*000-0000-00	Asterisk preceding Tektronix Part Number indicates manufactured by or for Tektronix, Inc., or reworked or checked components.
Use 000-0000-00	Part number indicated is direct replacement.
◐	Screwdriver adjustment.
▭	Control, adjustment or connector.

SECTION 7

ELECTRICAL PARTS LIST

Values are fixed unless marked Variable.

Ckt. No.	Tektronix Part No.	Serial/Model No. Eff	Disc	Description			
				Bulbs			
B494	150-0027-00	100	986	Neon, NE-23			
B494	150-0011-00	987	1139	Neon, NE-2	aged and checked		
B494	*150-0009-00	1140	1679	Neon, NE-2	aged and checked		
B494	150-0030-00	1680		Neon, NE-2 V			
B582	150-0027-00	100	1679	Neon, NE-23			
B582	150-0030-00	1680		Neon, NE-2 V			
				Capacitors			
Tolerance ±20% unless otherwise indicated.							
C420†	*295-0114-00	X2363		1 μF	PTM	100 V	
C424	281-0509-00	100	986	15 pF	Cer	500 V	10%
C424	281-0061-00	987		5.5-18 pF, Var	Cer		
C430	290-0000-00			6.25 μF	Elect.	300 V	
C436	283-0068-00			0.01 μF	Cer	500 V	
C437	290-0172-00	100	986	13,000 μF	Elect.	2.5 V	
C437	290-0268-00	987		20,000 μF	Elect.	2.5 V	
C443A	283-0555-00			0.002 μF	Mica	500 V	1%
C443B	*291-0035-00			0.0025 μF	Timing Series		
C443C				0.025 μF			
C443D				0.25 μF			
C443E				2.5 μF			
C445A	*291-0037-00			0.5 μF	Timing Series		
C445B				0.05 μF			
C445C				0.005 μF			
C445D				0.0005 μF			
C452	283-0526-00			0.001 μF	Mica	500 V	1%
C453	283-0555-00			0.002 μF	Mica	500 V	1%
C454	283-0068-00			0.01 μF	Cer	500 V	
C456	283-0004-00			0.02 μF	Cer	150 V	
C470F	281-0061-00	100	229	5.5-18 pF, Var	Cer		
C470F	281-0060-00	230		2-8 pF, Var	Cer		
C476	281-0544-00			5.6 pF	Cer	500 V	10%
C495	283-0002-00	X987		0.01 μF	Cer	500 V	
C499	283-0003-00	X1413		0.01 μF	Cer	150 V	
C507	283-0059-00	100	1679	1 μF	Cer	25 V	
C507	290-0134-00	1680	2362	22 μF	Elect.	15 V	
C507	283-0059-00	2363		1 μF	Cer	25 V	

†C420 and C520 matched to within 1% of each other, furnished as a unit.

Capacitors *(cont)*

Ckt. No.	Tektronix Part No.	Serial/Model No. Eff	Disc	Description			
C509	290-0149-00			5 μF	Elect.	150 V	
C513	283-0059-00	100	986X	1 μF	Cer	25 V	
C514	281-0579-00	X2363		21 pF	Cer	500 V	5%
C515	281-0579-00	X2363		21 pF	Cer	500 V	5%
C516	290-0149-00			5 μF	Elect.	150 V	
C520†	*295-0114-00	X2363		1 μF	PTM	100 V	
C522	283-0059-00	X2500		1 μF	Cer	25 V	
C524	281-0061-00			5.5-18 pF, Var	Cer		
C543A	283-0555-00			0.002 μF	Mica	500 V	1%
C543B	*291-0035-00			0.0025 μF	Timing Series		
C543C				0.025 μF			
C543D				0.25 μF			
C543E				2.5 μF			
C552	283-0526-00			0.001 μF	Mica	500 V	1%
C553	283-0555-00			0.002μF	Mica	500 V	1%
C554	283-0068-00			0.01 μF	Cer	500 V	
C576	281-0544-00			5.6 pF	Cer	500 V	10%
C586	281-0593-00			3.9 pF	Cer		10%

Diodes

D424	152-0246-00	X1850	2362X	Silicon Low leakage		0.25 W, 40 V
D437	152-0095-00	100	986X	Silicon	1N625	
D438	152-0095-00	100	986X	Silicon	1N625	
D491	152-0008-00	100	113	Germanium		
D491	152-0095-00	114		Silicon	1N625	
D508	*152-0185-00	X2363		Silicon	Replaceable by 1N4152	
D509	152-0101-00			Zener	1N3041B	1 W, 75 V, 5%
D516	152-0100-00			Zener	1N3046B	1 W, 120 V, 5%
D524	152-0246-00	X1850	2362X	Silicon Low leakage		0.25 W, 40 V
D591	152-0008-00	100	113	Germanium		
D591	152-0095-00	114		Silicon	1N625	

Inductors

L483	276-0507-00			Core, Ferramic Suppressor
L484	108-0240-00			820 μH
L583	276-0507-00			Core, Ferramic Suppressor
L584	108-0240-00			820 μH

Transistors

Q433	151-0098-00	100	986	Silicon	TI484
Q433	*151-0151-00	987	2362	Silicon	Replaceable by 2N930
Q433	151-0190-00	2363		Silicon	2N3904
Q434	151-0100-00	100	1559	Germanium	2N2191
Q434	151-0063-00	1560		Germanium	2N2207
Q474	151-0100-00	100	1559	Germanium	2N2191
Q474	151-0063-00	1560		Germanium	2N2207
Q494	*151-0059-00			Silicon	Selected from 2N1893
Q504	*151-0087-00			Silicon	Replaceable by 2N1131
Q508	151-0058-00	100	986	Silicon	RT5204
Q508	*151-0136-00	987	2362	Silicon	Replaceable by 2N3053
Q508	151-1022-00	2363		FET	

†C520 and C420 matched to within 1% of each other, furnished as a unit.

Transistors *(cont)*

Ckt. No.	Tektronix Part No.	Serial/Model No. Eff	Disc	Description	
Q514	151-0058-00	100	986	Silicon	RT5204
Q514	*151-0136-00	987		Silicon	Replaceable by 2N3053
Q533	151-0098-00	100	986	Silicon	T1484
Q533	*151-0151-00	987	2362	Silicon	Replaceable by 2N930
Q533	151-0190-00	2363		Silicon	2N3904
Q534	151-0100-00	100	1559	Germanium	2N2191
Q534	151-0063-00	1560		Germanium	2N2207
Q574	151-0100-00	100	1559	Germanium	2N2191
Q574	151-0063-00	1560		Germanium	2N2207

Resistors

Resistors are fixed, composition, ±10% unless otherwise indicated.

R402	302-0102-00			1 kΩ	½ W		
R403	302-0391-00			390 Ω	½ W		
R420	309-0095-00			10 MΩ	½ W	Prec	1%
R421	302-0101-00			100 Ω	½ W		
R424	309-0159-00	100	986	5 kΩ	½ W	Prec	1%
R424	323-0271-00	987		6.49 kΩ	½ W	Prec	1%
R425	316-0101-00	X987		100 Ω	¼ W		
R430	308-0082-00	100	986	3 kΩ	5 W	WW	5%
R430	308-0077-00	987	1313	1 kΩ	3 W	WW	
R430	308-0107-00	1314		1 kΩ	5 W	WW	5%
R431	308-0235-00	100	986	6.5 kΩ	10 W	WW	5%
R431	308-0216-00	987		6 kΩ	5 W	WW	1%
R432	302-0273-00	100	986	27 kΩ	½ W		
R432	302-0683-00	987		68 kΩ	½ W		
R433	301-0334-00	100	986	330 kΩ	½ W		5%
R433	315-0274-00	987		270 kΩ	¼ W		5%
R434	309-0235-00	100	986	9 kΩ	½ W	Prec	1%
R434	323-0314-00	987		18.2 kΩ	½ W	Prec	1%
R435	309-0201-00	100	986	2.85 kΩ	½ W	Prec	1%
R435	323-0233-00	987		2.61 kΩ	½ W	Prec	1%
R436	303-0153-00	100	986	15 kΩ	1 W		5%
R436	323-0281-00	987		8.25 kΩ	½ W	Prec	1%
R437	311-0074-00	X987		5 kΩ, Var			
R438	311-0129-00	100	1299	150 Ω, Var			
R438	311-0539-00	1300		150 Ω, Var			
R440A	323-0107-00	100	986	127 Ω	½ W	Prec	1%
R440A	323-0067-00			48.7 Ω	½ W	Prec	1%
R440B	309-0419-00	100	986	360 Ω	½ W	Prec	1%
R440B	323-0125-00	987		196 Ω	½ W	Prec	1%
R440C	309-0315-00	100	986	845 Ω	½ W	Prec	1%

Resistors *(cont)*

Ckt. No.	Tektronix Part No.	Serial/Model No. Eff	Disc	Description			
R440C	323-0164-00	987		499 Ω	½ W	Prec	1%
R440D	309-0348-00	100	986	2.47 kΩ	½ W	Prec	1%
R440D	323-0207-00	987		1.4 kΩ	½ W	Prec	1%
R440E	318-0073-00	100	986	5.88 kΩ	⅛ W	Prec	1%
R440E	323-0240-00	987		3.09 kΩ	½ W	Prec	1%
R440F	310-0071-00	100	139	18.03 kΩ	1 W	Prec	1%
R440F	309-0036-00	140	986	18 kΩ	½ W	Prec	1%
R440F	323-0273-00	987		6.81 kΩ	½ W	Prec	1%
R443	301-0154-00			150 kΩ	½ W		5%
R450	309-0149-00			1.2 MΩ	½ W	Prec	1%
R452	309-0415-00			2.67 MΩ	½ W	Prec	1%
R453	323-0493-00			1.33 MΩ	½ W	Prec	1%
R455	301-0683-00			68 kΩ	½ W		5%
R456	301-0623-00			62 kΩ	½ W		5%
R457	302-0101-00			100 Ω	½ W		
R459	302-0153-00			15 kΩ	½ W		
R461	302-0101-00			100 Ω	½ W		
R464	309-0100-00	100	169	10 kΩ	½ W	Prec	1%
R464	323-0289-00	170		10 kΩ	½ W	Prec	1%
R465A,B	311-0327-00			2 X 500 Ω, Var			
R466	302-0101-00			100 Ω	½ W		
R467	310-0067-00			28.05 kΩ	1 W	Prec	1%
R470A	309-0420-00			261 Ω	½ W	Prec	1%
R470B	309-0421-00			543 Ω	½ W	Prec	1%
R470C	309-0422-00			1.43 kΩ	½ W	Prec	1%
R470D	309-0423-00			3.16 kΩ	½ W	Prec	1%
R470E	309-0424-00			7.61 kΩ	½ W	Prec	1%
R470F	309-0040-00			56.5 kΩ	½ W	Prec	1%
R474	301-0562-00			5.6 kΩ	½ W		5%
R476	309-0392-00			20 kΩ	½ W	Prec	1%
R480	309-0350-00	100	229	12.4 kΩ	½ W	Prec	1%
R480	309-0226-00	230		9.7 kΩ	½ W	Prec	1%
R481	316-0471-00			470 Ω	¼ W		
R482A,B[1]	311-0330-00			2 X 10 kΩ, Var			
R484	305-0273-00			27 kΩ	2 W		5%
R485	311-0171-00	100	1622	5 kΩ, Var			
R485	311-0153-00	1623		10 kΩ, Var			
R488[2]	311-0352-00			5 kΩ, Var			
R489	308-0212-00	100	113	10 kΩ	3 W	WW	5%
R489	308-0211-00	114		12 kΩ	5 W	WW	5%

[1]Furnished as a unit with SW482.

[2]Furnished as a unit with SW450.

Resistors *(cont)*

Ckt. No.	Tektronix Part No.	Serial/Model No. Eff	Disc	Description			
R491	302-0682-00			6.8 kΩ	½ W		
R494	302-0474-00			470 kΩ	½ W		
R495	302-0334-00	100	986	330 kΩ	½ W		
R495	301-0184-00	987		180 kΩ	½ W		5%
R497	308-0107-00			1 kΩ	5 W	WW	5%
R498	307-0057-00	X1413		5.1 Ω	½ W		5%
R499	302-0224-00	X1413		220 kΩ	½ W		
R500	315-0151-00	X987		150 Ω	¼ W		5%
R501	311-0258-00			100 Ω, Var			
R503	311-0010-00	X1680		2.5 kΩ, Var			
R504	302-0683-00	100	986	68 kΩ	½ W		
R504	303-0273-00	987	1679	27 kΩ	1 W		5%
R504	301-0223-00	1680		22 kΩ	½ W		5%
R505	302-0333-00	100	986X	33 kΩ	½ W		
R507	302-0151-00	100	1679	150 Ω	½ W		
R507	302-0222-00	1680	2362	2.2 kΩ	½ W		
R507	316-0106-00	2363		10 MΩ	¼ W		
R508	303-0622-00	100	986	6.2 kΩ	1 W		5%
R508	308-0329-00	987		4 kΩ	3 W	WW	2%
R509	303-0162-00	100	986	1.6 kΩ	1 W		5%
R509	305-0122-00	987		1.2 kΩ	2 W		5%
R510	315-0474-00	X2363		470 kΩ	¼ W		5%
R511	302-0104-00	X1413		100 kΩ	½ W		
R512	302-0154-00	X1413		150 kΩ	½ W		
R513	302-0151-00	100	986X	150 Ω	½ W		
R514	315-0105-00	X987		1 MΩ	¼ W		5%
R515	311-0326-00	100	986	10 kΩ, Var			
R515	311-0306-00	987		2.5 MΩ, Var			
R516	315-0105-00	X987		1 MΩ	¼ W		5%
R517	301-0393-00	X987	1679X	39 kΩ	½ W		5%
R518	315-0513-00	X2363		51 kΩ	¼ W		5%
R519	315-0104-00	X2363		100 kΩ	¼ W		5%
R520	309-0095-00			10 MΩ	½ W	Prec	1%
R521	302-0101-00			100 Ω	½ W		
R522	316-0101-00	X2500		100 Ω	¼ W		
R524	309-0159-00	100	986	5 kΩ	½ W	Prec	1%
R524	323-0271-00	987		6.49 kΩ	½ W	Prec	1%
R525	316-0101-00	X987		100 Ω	¼ W		
R533	301-0334-00	100	986	330 kΩ	½ W		5%
R533	315-0274-00	987		270 kΩ	¼ W		5%
R534	309-0235-00	100	986	9 kΩ	½ W	Prec	1%
R534	323-0314-00	987		18.2 kΩ	½ W	Prec	1%
R535	309-0201-00	100	986	2.85 kΩ	½ W	Prec	1%
R535	323-0233-00	987		2.61 kΩ	½ W	Prec	1%
R543	301-0154-00			150 kΩ	½ W		5%
R550	309-0149-00			1.2 MΩ	½ W	Prec	1%
R552	309-0415-00			2.67 MΩ	½ W	Prec	1%
R553	323-0493-00			1.33 MΩ	½ W	Prec	1%
R561	302-0101-00			100 Ω	½ W		
R564	309-0100-00	100	169	10 kΩ	½ W	Prec	1%

Resistors *(cont)*

Ckt. No.	Tektronix Part No.	Serial/Model No. Eff	Disc	Description			
R564	323-0289-00	170		10 kΩ	½ W	Prec	1%
R466	302-0101-00			100 Ω	½ W		
R567	310-0067-00			28.05 kΩ	1 W	Prec	1%
R576	309-0392-00			20 kΩ	½ W	Prec	1%
R578	309-0375-00	100	2559	33.3 kΩ	½ W	Prec	1%
R578	323-0339-00	2560		33.2 kΩ	½ W	Prec	1%
R579	311-0115-00			100 kΩ, Var			
R581	316-0471-00			470 Ω	¼ W		
R582	302-0683-00			68 kΩ	½ W		
R584	305-0273-00			27 kΩ	2 W		5%
R585	315-0561-00			560 Ω	¼ W		5%
R586	302-0474-00			470 kΩ	½ W		
R587	302-0184-00			180 kΩ	½ W		
R588	311-0061-00			250 kΩ, Var			
R589	304-0333-00			33 kΩ	1 W		
R591	302-0682-00			6.8 kΩ	½ W		

Switches

Unwired	Wired				
SW401	260-0482-00			Rotary	INPUT SELECTOR
SW445A }	260-0481-00			Rotary	FREQUENCY RESPONSE (Low)
SW445B }					FREQUENCY RESPONSE (High)
SW450[3]	311-0352-00				TRACE RESTORE
SW453	260-0483-00			Rotary	FILTER (Line Frequency)
SW470	260-0480-00	*262-0521-00	100	986	Rotary	MILLIVOLTS/DIV
SW470	260-0480-00	*262-0701-00	987		Rotary	MILLIVOLTS/DIV
SW482[4]	311-0330-00				

Electron Tubes

V424	154-0408-00	100	899	5842
V424	*157-0098-00	900	986	5842 checked
V424	*157-0105-00	987	1412	7586 checked
V424[5]	*157-0106-00	1413		7586 checked
V425	*157-0105-00	X987	1412	7586 checked
V425[5]	*157-0106-00	1413		7586 checked
V464	154-0413-00			8416/12DJ8
V484	154-0163-00			6BA8
V524	154-0408-00	100	899	5842
V524	*157-0098-00	900	986	5842 checked

[3]Furnished as a unit with R488.

[4]Furnished as a unit with R482A,B.

[5]V424, V425, V524 and V525 checked and matched to each other (set of 4).

Electron Tubes *(cont)*

Ckt. No.	Tektronix Part No.	Serial/Model No. Eff	Disc	Description
V524	*157-0105-00	987	1412	7586 checked
V524[6]	*157-0106-00	1413		7586 checked
V525	*157-0105-00	X987	1412	7586 checked
V525[6]	*157-0106-00	1413		7586 checked
V584	154-0163-00			6BA8

[6]V424, V425, V524 and V525 checked and matched to each other (set of 4).

FIGURE AND INDEX NUMBERS

Items in this section are referenced by figure and index numbers to the illustrations which appear on the pullout pages immediately following the Diagrams section of this instruction manual.

INDENTATION SYSTEM

This mechanical parts list is indented to indicate item relationships. Following is an example of the indentation system used in the Description column.

Assembly and/or Component
  Detail Part of Assembly and/or Component
  mounting hardware for Detail Part
    Parts of Detail Part
    mounting hardware for Parts of Detail Part
mounting hardware for Assembly and/or Component

Mounting hardware always appears in the same indentation as the item it mounts, while the detail parts are indented to the right. Indented items are part of, and included with, the next higher indentation.

Mounting hardware must be purchased separately, unless otherwise specified.

PARTS ORDERING INFORMATION

Replacement parts are available from or through your local Tektronix, Inc. Field Office or representative.

Changes to Tektronix instruments are sometimes made to accommodate improved components as they become available, and to give you the benefit of the latest circuit improvements developed in our engineering department. It is therefore important, when ordering parts, to include the following information in your order: Part number, instrument type or number, serial or model number, and modification number if applicable.

If a part you have ordered has been replaced with a new or improved part, your local Tektronix, Inc. Field Office or representative will contact you concerning any change in part number.

Change information, if any, is located at the rear of this manual.

ABBREVIATIONS AND SYMBOLS

For an explanation of the abbreviations and symbols used in this section, please refer to the page immediately preceding the Electrical Parts List in this instruction manual.

INDEX OF MECHANICAL PARTS LIST ILLUSTRATIONS

(Located behind diagrams)

SECTION 8

MECHANICAL PARTS LIST

FIG. 1 FRONT & REAR

Fig. & Index No.	Tektronix Part No.	Serial/Model No. Eff	Disc	Qty	Description 1 2 3 4 5
1-1	366-0173-00			1	KNOB, charcoal—FILTER
	- - - - - -			-	knob includes:
	213-0004-00			1	SCREW, set, 6-32 x 3/16 inch, HSS
-2	260-0483-00			1	SWITCH, unwired—FILTER
	- - - - - -			-	mounting hardware: (not included w/switch)
-3	210-0012-00			1	LOCKWASHER, internal, 3/8 ID x 1/2 inch OD
-4	210-0840-00			1	WASHER, flat, 0.390 ID x 9/16 inch OD
-5	210-0413-00			1	NUT, hex., 3/8-32 x 1/2 inch
-6	366-0173-00			1	KNOB, charcoal—INPUT SELECTOR
	- - - - - -			-	knob includes:
	213-0004-00			1	SCREW, set, 6-32 x 3/16 inch, HSS
-7	260-0482-00			1	SWITCH, unwired—INPUT SELECTOR
	- - - - - -			-	mounting hardware: (not included w/switch)
-8	210-0012-00			1	LOCKWASHER, internal, 3/8 ID x 1/2 inch OD
-9	210-0840-00			1	WASHER, flat, 0.390 ID x 9/16 inch OD
-10	210-0413-00			1	NUT, hex., 3/8-32 x 1/2 inch
-11	366-0031-00			1	KNOB, red—FREQ RESPONSE
	- - - - - -			-	knob includes:
	213-0004-00			1	SCREW, set, 6-32 x 3/16 inch, HSS
-12	366-0142-00			1	KNOB, charcoal—FREQ RESPONSE
	- - - - - -			-	knob includes:
	213-0004-00			1	SCREW, set, 6-32 x 3/16 inch, HSS
-13	260-0481-00			1	SWITCH, unwired—FREQ RESPONSE
	- - - - - -			-	mounting hardware: (not included w/switch)
-14	210-0012-00			1	LOCKWASHER, internal, 3/8 ID x 1/2 inch OD
-15	210-0840-00			1	WASHER, flat, 0.390 ID x 9/16 inch OD
-16	210-0413-00			1	NUT, hex., 3/8-32 x 1/2 inch
-17	366-0162-00			1	KNOB, push button, red—RESTORE TRACE
	- - - - - -			-	knob includes:
	213-0050-00			1	SCREW, set, 2-56 x 3/16 inch, HSS
-18	366-0175-00			1	KNOB, charcoal—POSITION
	- - - - - -			-	knob includes:
	213-0004-00			1	SCREW, set, 6-32 x 3/16 inch, HSS
-19	- - - - - -			1	RESISTOR, variable
	- - - - - -			-	mounting hardware: (not included w/resistor)
-20	210-0207-00			1	LUG, solder, 3/8 ID x 5/8 inch OD, SE
-21	210-0012-00			1	LOCKWASHER, internal, 3/8 ID x 1/2 inch OD
-22	210-0840-00			1	WASHER, flat, 0.390 ID x 9/16 inch OD
-23	210-0413-00			1	NUT, hex., 3/8-32 x 1/2 inch

FIG. 1 FRONT & REAR *(cont)*

Fig. & Index No.	Tektronix Part No.	Serial/Model No. Eff	Disc	Qty	Description 1 2 3 4 5
1-24	366-0031-00			1	KNOB, red—VARIABLE
	- - - - - -			-	knob includes:
	213-0004-00			1	SCREW, set, 6-32 x 3/16 inch, HSS
-25	366-0142-00			1	KNOB, charcoal—MILLIVOLTS/DIV
	- - - - - -			-	knob includes:
	213-0004-00			1	SCREW, set, 6-32 x 3/16 inch, HSS
-26	262-0521-00	100	986	1	SWITCH, wired—MILLIVOLTS/DIV
	262-0701-00	987		1	SWITCH, wired—MILLIVOLTS/DIV
	- - - - - -			-	switch includes:
	260-0480-00			1	SWITCH, unwired
-27	384-0268-00			1	ROD, extension
-28	406-0750-00			1	BRACKET, switch
	- - - - - -			-	mounting hardware: (not included w/bracket)
-29	210-0004-00			2	LOCKWASHER, internal, #4
-30	210-0406-00			2	NUT, hex., 4-40 x 3/16 inch
	211-0507-00			2	SCREW, 6-32 x 5/16 inch, PHS
	210-0803-00			2	WASHER, flat, 0.150 ID x 3/8 inch OD
-31	- - - - - -			1	RESISTOR, variable
	- - - - - -			-	mounting hardware: (not included w/resistor)
-32	210-0413-00			2	NUT, hex., 3/8-32 x 1/2 inch
-33	210-0012-00			1	LOCKWASHER, internal, 3/8 ID x 1/2 inch OD
-34	376-0014-00			1	COUPLING
-35	348-0004-00			1	GROMMET, rubber, 3/8 inch diameter
	- - - - - -			-	mounting hardware: (not included w/switch)
-36	210-0012-00			1	LOCKWASHER, internal, 3/8 ID x 1/2 inch OD
-37	210-0840-00			1	WASHER, flat, 0.390 ID x 9/16 inch OD
-38	210-0413-00			1	NUT, hex., 3/8-32 x 1/2 inch
-39	131-0206-00			1	CONNECTOR, probe power
	- - - - - -			-	mounting hardware: (not included w/connector)
-40	210-0559-00			1	NUT, hex., 7/16-18 x 9/16 inch
-41	210-0941-00			1	WASHER, flat, 11/16 ID x 0.448 inch OD
-42	366-0109-00			1	KNOB, plug-in securing
	- - - - - -			-	knob includes:
	213-0004-00			1	SCREW, set, 6-32 x 3/16 inch, HSS
-43	- - - - - -			3	RESISTOR, variable
	- - - - - -			-	mounting hardware for each: (not included w/resistor)
-44	358-0075-00			1	BUSHING, resistor mounting
-45	337-0552-00			1	SHIELD, switch
	- - - - - -			-	mounting hardware: (not included w/shield)
-46	210-0586-00			3	NUT, keps, 4-40 x 1/4 inch
	210-0201-00			1	LUG, solder, SE #4

FIG. 1 FRONT & REAR *(cont)*

Fig. & Index No.	Tektronix Part No.	Serial/Model No. Eff	Disc	Qty	Description 1 2 3 4 5
1-47	348-0004-00			1	GROMMET, rubber, 3/4 inch diameter
-48	- - - - - -			2	RESISTOR, variable
	- - - - - -			-	mounting hardware for each: (not included w/resistor)
-49	210-0438-00			2	NUT, hex., 1-72 x 5/32 inch
-50	406-0635-00			2	BRACKET, resistor mounting
	- - - - - -			-	mounting hardware for each: (not included w/bracket)
	213-0088-00			2	SCREW, thread forming, #4 x 1/4 inch, PHS
-51	333-0672-00			1	PANEL, front
-52	387-0602-00			1	PLATE, front subpanel
-53	387-0581-00			1	PLATE, rear
-54	384-0566-00	100	509	4	ROD, frame spacing
	384-0615-00	510		4	ROD, frame spacing
	- - - - - -			-	mounting hardware for each: (not included w/rod)
-55	212-0044-00			1	SCREW, 8-32 x 1/2 inch, RHS
-56	131-0149-00			1	CONNECTOR, 24 contact
	- - - - - -			-	mounting hardware: (not included w/connector)
-57	211-0008-00			2	SCREW, 4-40 x 1/4 inch, RHS
-58	210-0004-00			2	LOCKWASHER, internal, #4
-59	210-0201-00			2	LUG, solder, SE #4
-60	210-0406-00			2	NUT, hex., 4-40 x 3/16 inch
-61	351-0037-00			1	GUIDE, plug-in
	- - - - - -			-	mounting hardware: (not included w/guide)
-62	211-0013-00			1	SCREW, 4-40 x 3/8 inch, RHS
	210-0004-00			1	LOCKWASHER, internal, #4
	210-0406-00			1	NUT, hex., 4-40 x 3/16 inch
-63	214-0052-00			1	FASTENER, pawl right
	- - - - - -			-	mounting hardware: (not included w/fastener)
-64	210-0004-00			2	LOCKWASHER, internal, #4
-65	210-0406-00			2	NUT, hex., 4-40 x 3/16 inch
	378-0541-00	X1680		2	FILTER, lens light
-66	352-0008-00	100	1679	2	HOLDER, neon bulb, single
	352-0067-00	1680		2	HOLDER, neon bulb, single
	- - - - - -			-	mounting hardware for each: (not included w/holder)
-67	211-0031-00	100	1679	1	SCREW, 4-40 x 1 inch, 100° csk, FHS
	211-0109-00	1680		1	SCREW, 4-40 x 7/8 inch, 100° csk, FHS
-68	210-0406-00			2	NUT, hex., 4-40 x 3/16 inch

FIG. 2 CHASSIS

Fig. & Index No.	Tektronix Part No.	Serial/Model No. Eff	Disc	Qty	Description 1 2 3 4 5
2-1	441-0413-00	101	986	1	CHASSIS
	441-0625-00	987		1	CHASSIS
	- - - - - -			-	mounting hardware: (not included w/chassis)
	211-0504-00			3	SCREW, 6-32 x 1/4 inch, PHS
	211-0538-00			2	SCREW, 6-32 x 5/16 inch, 100° csk, FHS
-2	337-0478-00			1	SHIELD, chassis
	- - - - - -			-	mounting hardware: (not included w/shield)
-3	211-0504-00			4	SCREW, 6-32 x 1/4 inch, PHS
-4	348-0004-00			1	GROMMET, rubber, 3/8 inch diameter
-5	343-0002-00			1	CLAMP, cable, plastic
	- - - - - -			-	mounting hardware: (not included w/clamp)
-6	211-0507-00			1	SCREW, 6-32 x 5/16 inch, PHS
-7	210-0863-00			1	WASHER, "D" shape
-8	210-0006-00			1	LOCKWASHER, internal, #6
-9	210-0407-00			1	NUT, hex., 6-32 x 1/4 inch
-10	441-0458-00	100	986	1	CHASSIS, floating
	441-0626-00	987	1412	1	CHASSIS, floating
	441-0626-01	1413		1	CHASSIS, floating
	- - - - - -			-	mounting hardware: (not included w/chassis)
	210-0006-00			3	LOCKWASHER, internal, #6
	210-0407-00			3	NUT, hex., 6-32 x 1/4 inch
	348-0040-00	100	1412	3	ASSEMBLY, shockmount
	348-0040-00	1413		2	ASSEMBLY, shockmount
	- - - - - -			-	each assembly includes:
-11	406-0399-00			1	BRACKET, shockmount
-12	348-0039-00			1	SHOCKMOUNT, rubber
	- - - - - -			-	mounting hardware for each: (not included w/assembly)
-13	211-0507-00			1	SCREW, 6-32 x 5/16 inch, PHS
-14	210-0803-00			1	WASHER, flat, 0.150 ID x 3/8 inch OD
-15	210-0006-00			1	LOCKWASHER, internal, #6
-16	210-0407-00			1	NUT, hex., 6-32 x 1/4 inch
-17	348-0007-00	X1413		1	SHOCKMOUNT, rubber
	361-0113-00	X2290		2	RESTRAINT, shockmount
-18	407-0203-00	X1413		1	BRACKET, shockmount
	- - - - - -			-	mounting hardware: (not included w/bracket)
	211-0507-00			1	SCREW, 6-32 x 5/16 inch, PHS
	210-0803-00			1	WASHER, flat, 0.150 ID x 3/8 inch OD
	210-0006-00			1	LOCKWASHER, internal, #6
	210-0407-00			1	NUT, hex., 6-32 x 1/4 inch

FIG. 2 CHASSIS *(cont)*

Fig. & Index No.	Tektronix Part No.	Serial/Model No. Eff	Disc	Qty	Description 1 2 3 4 5
2-19	210-0259-00	100	986	1	LUG, solder, #2
	210-0259-00	987		2	LUG, solder, #2
	- - - - - -			-	mounting hardware for each: (not included w/lug)
-20	213-0055-00			1	SCREW, thread cutting, 2-32 x 3/16 inch, PHS
-21	136-0095-00	100	709	6	SOCKET, transistor, 4 pin
	136-0181-00	710		6	SOCKET, transistor, 3 pin
	- - - - - -			-	mounting hardware for each: (not included w/socket)
	213-0113-00	100	709	2	SCREW, thread cutting, 2-32 x 5/16 inch, PHS
	354-0234-00	710		1	RING, socket mounting
-22	136-0095-00	100	709	4	SOCKET, transistor, 4 pin
	136-0181-00	710	1559	4	SOCKET, transistor, 3 pin
	136-0182-00	1560		4	SOCKET, transistor, 4 pin
	- - - - - -			-	mounting hardware for each: (not included w/socket)
	213-0113-00	100	709	2	SCREW, thread cutting, 2-32 x 5/16 inch, PHS
-23	354-0234-00	710		1	RING, socket mounting
-24	136-0014-00	100	986	2	SOCKET, tube, 9 pin
	136-0131-00	987		4	SOCKET, nuvistor, 5 pin
	- - - - - -			-	mounting hardware for each: (not included w/socket)
	213-0044-00	100	986X	2	SCREW, thread forming, 5-32 x 3/16 inch, PHS
-25	200-0554-00	X987		2	COVER, heat stabilizer
	- - - - - -			-	mounting hardware for each: (not included w/cover)
-26	211-0516-00			1	SCREW, 6-32 x 7/8 inch, PHS
-27	377-0103-00	X987		4	INSERT, heat stabilizer
-28	- - - - - -			3	CAPACITOR
	- - - - - -			-	mounting hardware for each: (not included w/capacitor)
-29	214-0282-00			1	GASKET, capacitor
-30	210-0811-00			2	WASHER, fiber, #6
-31	210-0802-00			2	WASHER, flat, 0.150 ID x 5/16 inch OD
-32	210-0006-00			2	LOCKWASHER, internal, #6
-33	210-0407-00			2	NUT, hex., 6-32 x 1/4 inch
-34	348-0006-00			1	GROMMET, rubber, 3/4 inch diameter
-35	348-0003-00			1	GROMMET, rubber, 5/16 inch diameter
-36	348-0005-00			1	GROMMET, rubber, 1/2 inch diameter
-37	210-0201-00			4	LUG, solder, SE #4
	- - - - - -			-	mounting hardware for each: (not included w/lug)
-38	213-0044-00			1	SCREW, thread forming, 5-32 x 3/16 inch, PHS

FIG. 2 CHASSIS *(cont)*

Fig. & Index No.	Tektronix Part No.	Serial/Model No. Eff	Disc	Qty	Description 1 2 3 4 5
2-39	210-0204-00	100	986	1	LUG, solder, DE #6
	210-0202-00	987		1	LUG, solder, SE #6
	- - - - - -			-	mounting hardware: (not included w/lug)
-40	213-0044-00			1	SCREW, thread forming, 5-32 x 3/16 inch, PHS
-41	348-0031-00			4	GROMMET, plastic, snap-in
-42	- - - - - -			1	RESISTOR
	- - - - - -			-	mounting hardware: (not included w/resistor)
	211-0553-00	100	986	1	SCREW, 6-32 x 1 1/2 inches, RHS
	211-0544-00	987	1313X	1	SCREW, 6-32 x 3/4 inch, THS
	210-0601-00	100	986X	1	EYELET
	210-0478-00	100	1313X	1	NUT, hex., 5/16 x 21/32 inch long
	211-0507-00	100	1313X	1	SCREW, 6-32 x 5/16 inch, PHS
	- - - - - -			1	RESISTOR
	- - - - - -			-	mounting hardware: (not included w/resistor)
-43	211-0530-00	100	986	1	SCREW, 6-32 x 1 3/4 inches, PHS
	211-0544-00	987	1313	1	SCREW, 6-32 x 3/4 inch, THS
	211-0530-00	1314		1	SCREW, 6-32 x 1 3/4 inches, PHS
-44	210-0601-00	100	986X	1	EYELET
	210-0601-00	X1314		3	EYELET
-45	210-0478-00			1	NUT, hex., 5/16 x 21/32 inch long
	210-0202-00	100	986X	1	LUG, solder, SE #6
-46	211-0507-00			1	SCREW, 6-32 x 5/16 inch, PHS
-47	- - - - - -			1	RESISTOR, variable
	- - - - - -			-	mounting hardware: (not included w/resistor)
-48	210-0940-00			1	WASHER, flat, 1/4 ID x 3/8 inch OD
-49	210-0583-00			1	NUT, hex., 1/4-32 x 5/16 inch
-50	337-0009-00	X987		2	SHIELD, tube
-51	136-0014-00	100	986	2	SOCKET, tube, 9 pin
	136-0022-00	987		2	SOCKET, tube, 9 pin
	- - - - - -			-	mounting hardware for each: (not included w/socket)
-52	213-0044-00			2	SCREW, thread forming, 5-32 x 3/16 inch, PHS
-53	385-0135-00			1	ROD, plastic, 5/16 x 15/16 inch long
	- - - - - -			-	mounting hardware: (not included w/rod)
-54	213-0041-00			1	SCREW, thread cutting, 6-32 x 3/8 inch, THS
-55	- - - - - -			1	CAPACITOR
	- - - - - -			-	mounting hardware: (not included w/capacitor)
-56	354-0068-00			1	RING, plastic securing
-57	136-0014-00			1	SOCKET, tube, 9 pin
	- - - - - -			-	mounting hardware: (not included w/socket)
-58	213-0044-00			2	SCREW, thread forming, 5-32 x 3/16 inch, PHS

FIG. 2 CHASSIS *(cont)*

Fig. & Index No.	Tektronix Part No.	Serial/Model No. Eff	Disc	Qty	Description 1 2 3 4 5
2-59	- - - - - -			1	CAPACITOR
	- - - - - -			-	mounting hardware: (not included w/capacitor)
-60	343-0086-00	100	986	1	CLAMP, capacitor mounting
	343-0064-00	987		1	CLAMP, capacitor mounting
	214-0387-00	X480	986X	1	GASKET, capacitor insulating
-61	211-0507-00	100	113	2	SCREW, 6-32 x 5/16 inch, PHS
	211-0510-00	114	986	2	SCREW, 6-32 x 3/8 inch, PHS
	211-0504-00	987		6	SCREW, 6-32 x 1/4 inch, PHS
-62	210-0811-00	X114	986X	2	WASHER, fiber, #6
	210-0802-00	X114	986	2	WASHER, flat, 0.150 ID x 5/16 inch OD
	210-0803-00	987		3	WASHER, flat, 0.150 ID x 3/8 inch OD
-63	385-0100-00	X987		3	ROD, plastic
	210-0006-00	100	986X	2	LOCKWASHER, internal, #6
	210-0407-00	100	986X	2	NUT, hex., 6-32 x 1/4 inch
-64	211-0513-00	100	986	1	SCREW, 6-32 x 5/8 inch, PHS
	212-0557-00	987		1	SCREW, 10-32 x 1/2 inch, RHS
-65	210-0457-00	100	986	1	NUT, keps, 6-32 x 5/16 inch
	220-0410-00	987		1	NUT, keps, 10-32 x 3/8 inch
-66	210-0206-00			2	LUG, solder, SE #10
	- - - - - -			-	mounting hardware for each: (not included w/lug)
-67	210-0010-00	X987		1	LOCKWASHER, internal, #10
-68	210-0507-00	X987		1	SCREW, 10-32 x 3/8 inch, PHS
-69	124-0145-00			8	STRIP, ceramic, 7/16 inch h, w/20 notches
	- - - - - -			-	each strip includes:
	355-0046-00			2	STUD, plastic
	- - - - - -			-	mounting hardware for each: (not included w/strip)
	361-0009-00			2	SPACER, plastic, 9/32 inch long
-70	124-0148-00			1	STRIP, ceramic, 7/16 inch h, w/9 notches
	- - - - - -			-	strip includes:
	355-0046-00			2	STUD, plastic
	- - - - - -			-	mounting hardware: (not included w/strip)
	361-0009-00			2	SPACER, plastic, 9/32 inch long
-71	124-0145-00			2	STRIP, ceramic, 7/16 inch h, w/20 notches
	- - - - - -			-	each strip includes:
	355-0046-00			2	STUD, plastic
	- - - - - -			-	mounting hardware for each: (not included w/strip)
	361-0009-00	100	1679	2	SPACER, plastic, 9/32 inch long
	361-0008-00	1680		2	SPACER, plastic, 6/32 inch long
-72	179-0678-00	100	986	1	CABLE HARNESS, chassis
	179-0975-00	987	1679	1	CABLE HARNESS, chassis
	179-0975-01	1680		1	CABLE HARNESS, chassis
-73	179-0679-00	100	986	1	CABLE HARNESS, input amplifier
	179-0976-00	987		1	CABLE HARNESS, input amplifier

FIG. 3 STANDARD ACCESSORIES

A

Fig. & Index No.	Tektronix Part No.	Serial/Model No. Eff	Disc	Qty	Description 1 2 3 4 5
3-1	012-0072-00			1	CABLE, input
	070-0328-01			2	MANUAL, instruction (not shown)

F

INPUT CABLE
(Part No. 012-0072-00)

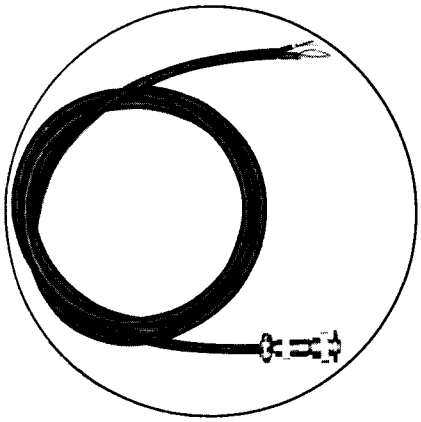

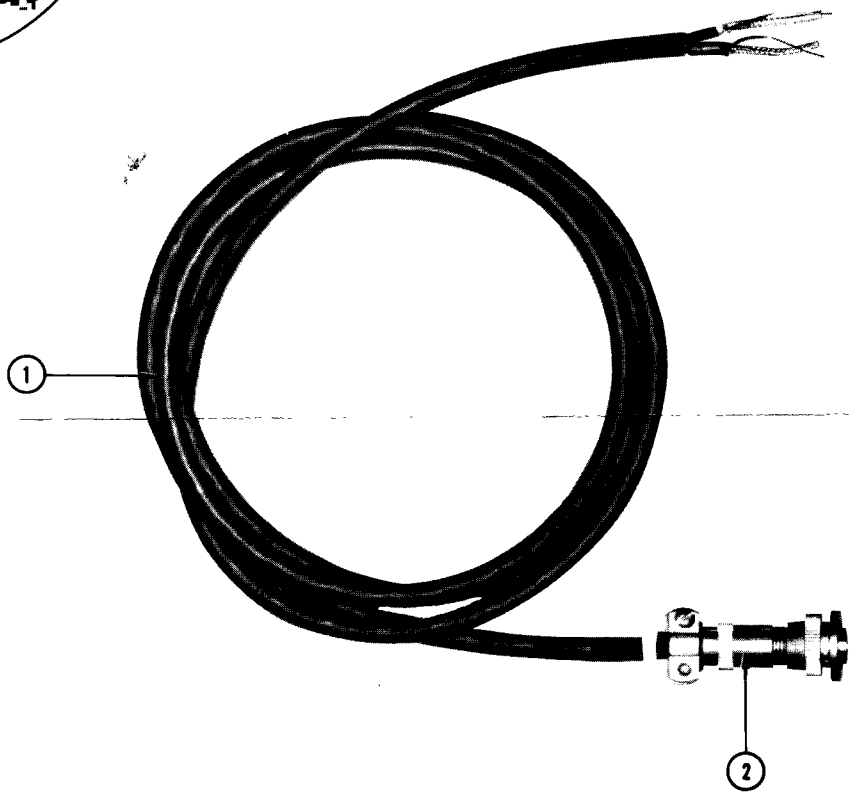

REF. NO.	PART NO.	SERIAL/MODEL NO. EFF.	SERIAL/MODEL NO. DISC.	QTY.	DESCRIPTION
1	175-0270-00			FT	CABLE (5 ft.)
2	131-0268-00			1	CONNECTOR

DATA SHEET NO.
061-0753-00

OCTOBER 1965
(Revised)

INPUT CABLE
(Part No. 012-0072-00)

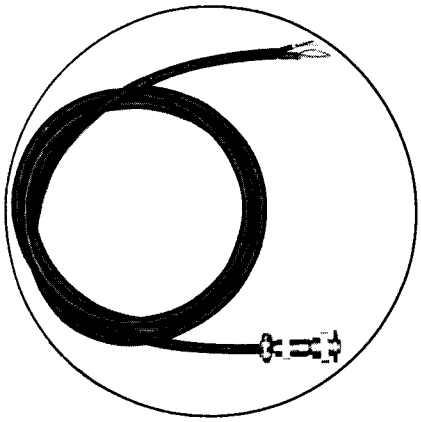

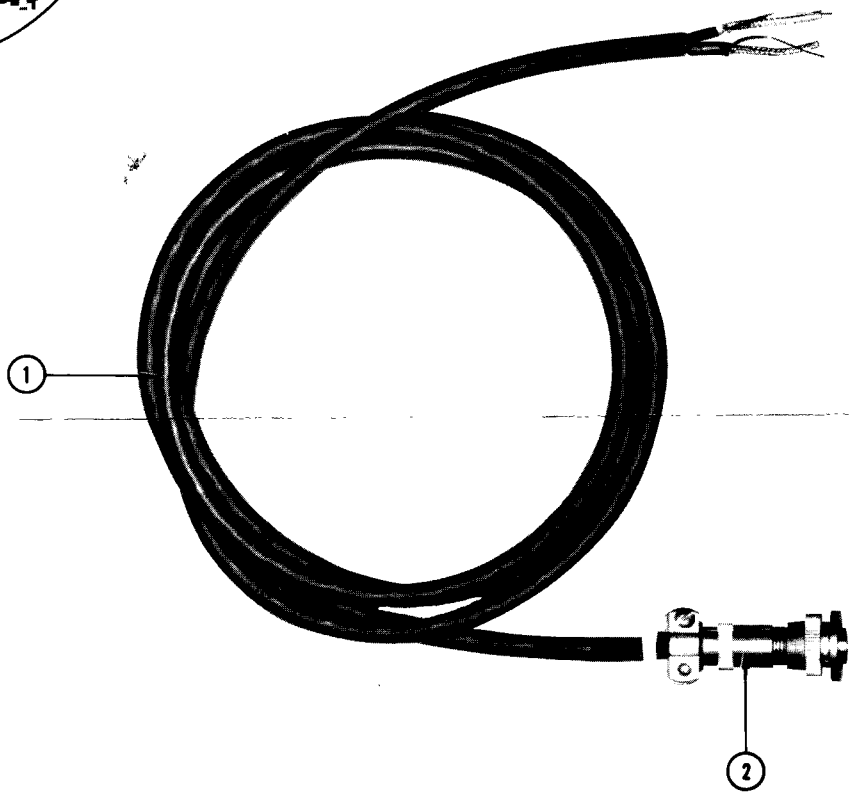

REF. NO.	PART NO.	SERIAL/MODEL NO. EFF.	SERIAL/MODEL NO. DISC.	QTY.	DESCRIPTION
1	175-0270-00			FT	CABLE (5 ft.)
2	131-0268-00			1	CONNECTOR

DATA SHEET NO.
061-0753-00

OCTOBER 1965
(Revised)

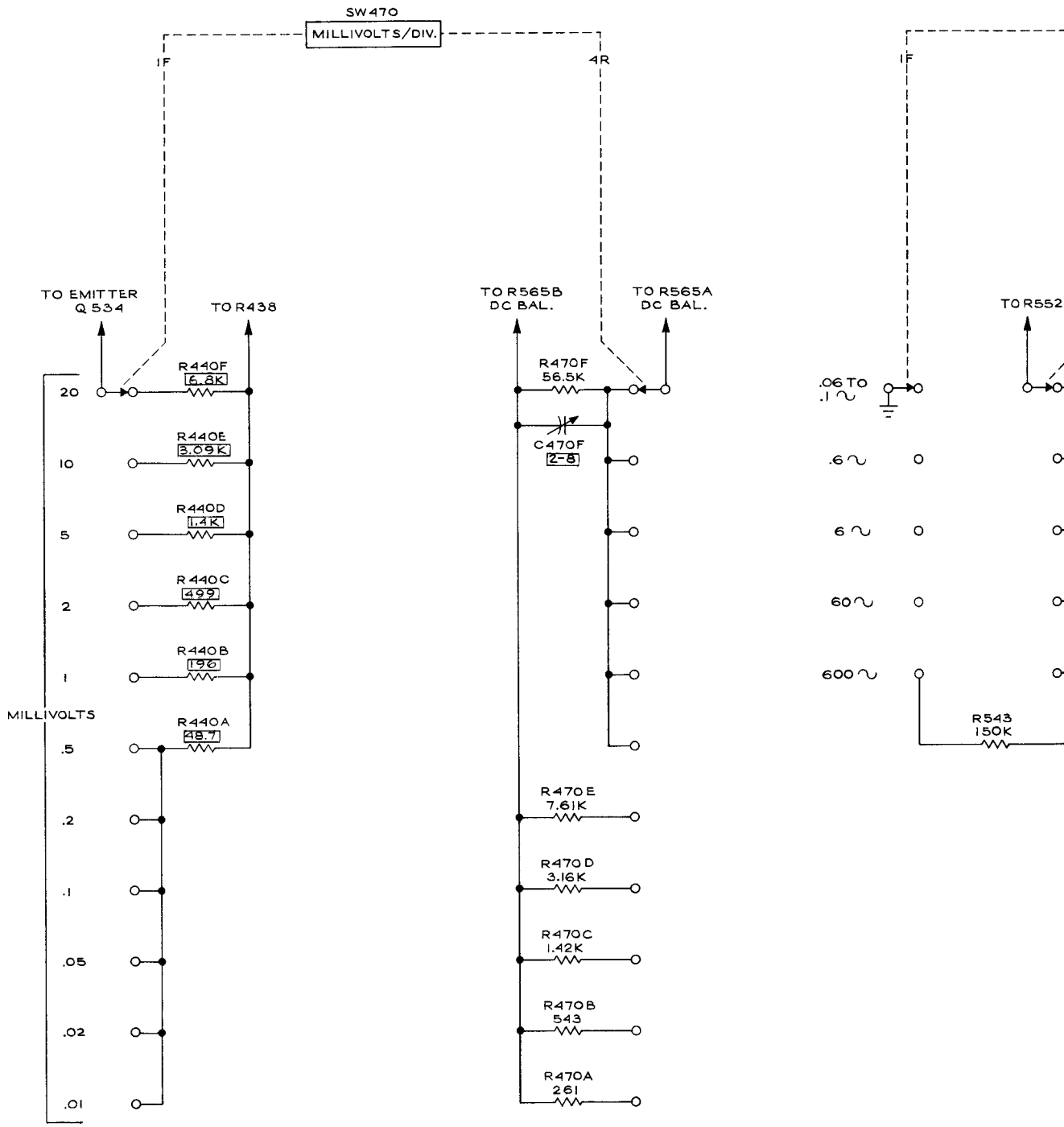

TYPE 2A61 PLUG-IN

c

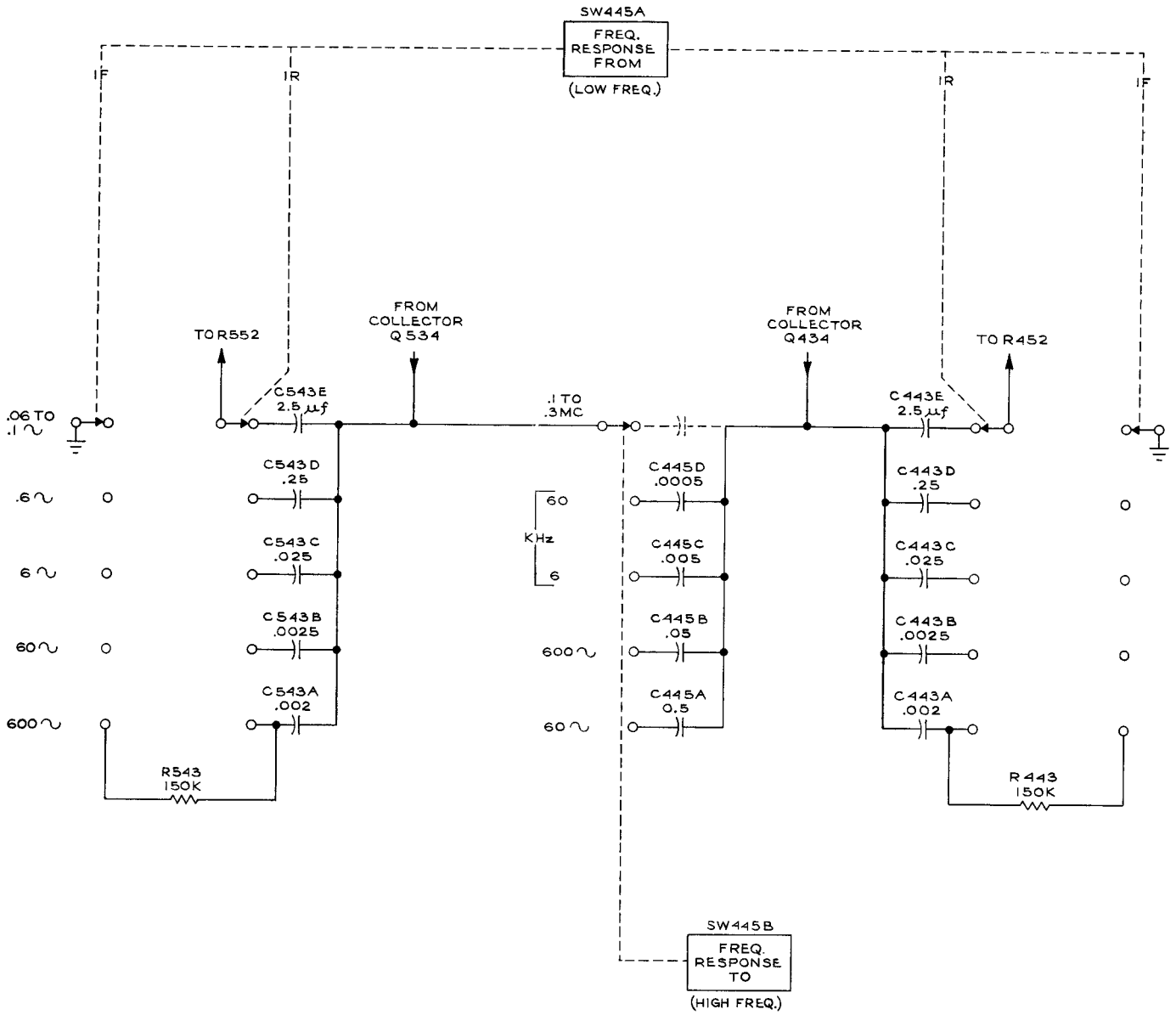

SEE PARTS LIST FOR EARLIER VALUES AND S/N CHANGES OF PARTS MARKED WITH BLUE OUTLINE

CMD 1266

ATTENUATOR & FREQ. RESPONSE SWITCHING

c

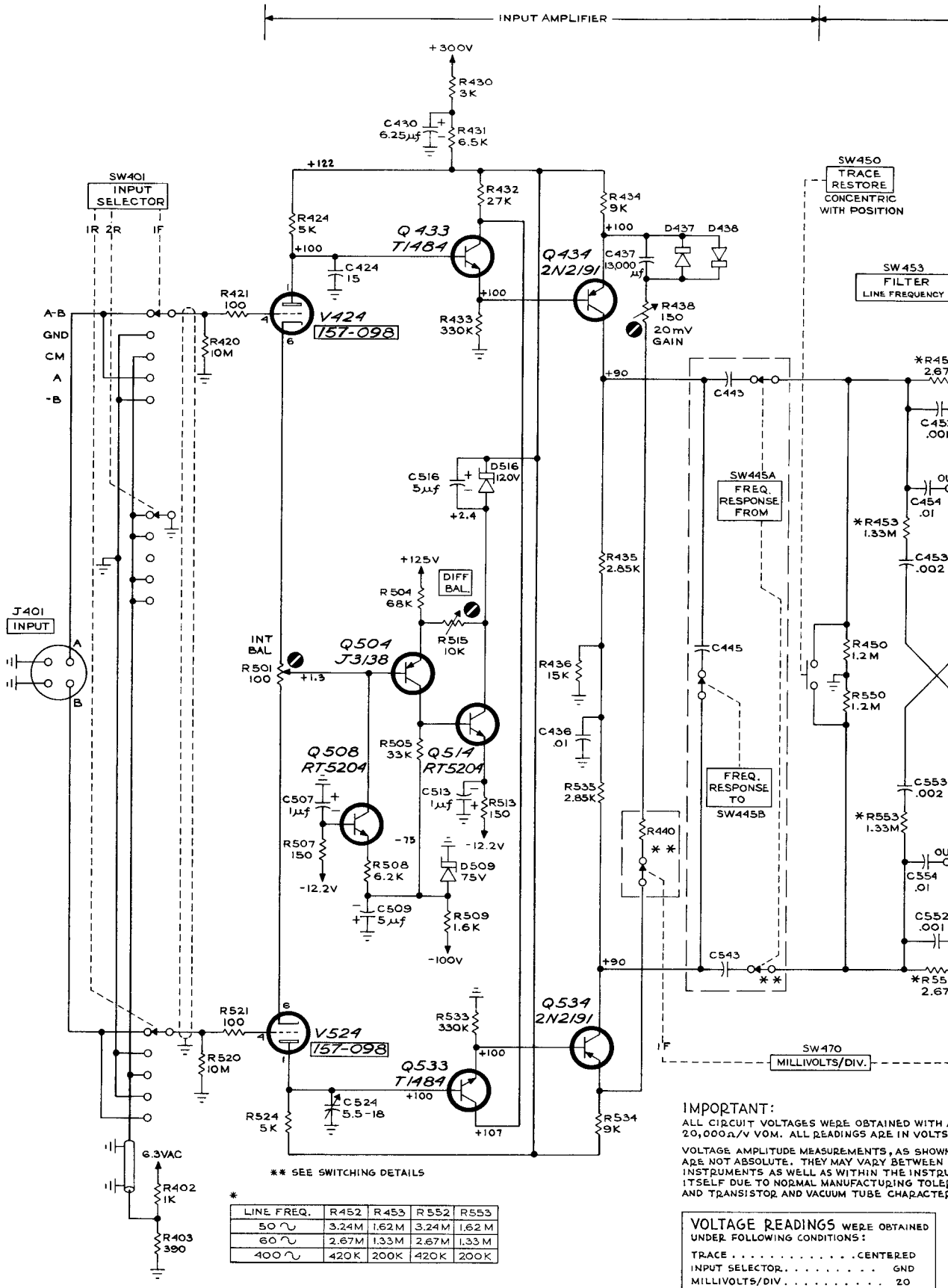

LINE FREQ.	R452	R453	R552	R553
50 ∿	3.24M	1.62M	3.24M	1.62M
60 ∿	2.67M	1.33M	2.67M	1.33M
400 ∿	420K	200K	420K	200K

IMPORTANT:
ALL CIRCUIT VOLTAGES WERE OBTAINED WITH A 20,000Ω/V VOM. ALL READINGS ARE IN VOLTS.

VOLTAGE AMPLITUDE MEASUREMENTS, AS SHOWN ARE NOT ABSOLUTE. THEY MAY VARY BETWEEN INSTRUMENTS AS WELL AS WITHIN THE INSTRU ITSELF DUE TO NORMAL MANUFACTURING TOLE AND TRANSISTOR AND VACUUM TUBE CHARACTE

VOLTAGE READINGS WERE OBTAINED UNDER FOLLOWING CONDITIONS:

TRACE	CENTERED
INPUT SELECTOR	GND
MILLIVOLTS/DIV	20
FILTER	OUT

TYPE 2A61 PLUG-IN

SEE PARTS LIST FOR EARLIER VALUES AND S/N CHANGES OF PARTS MARKED WITH BLUE OUTLINE

C

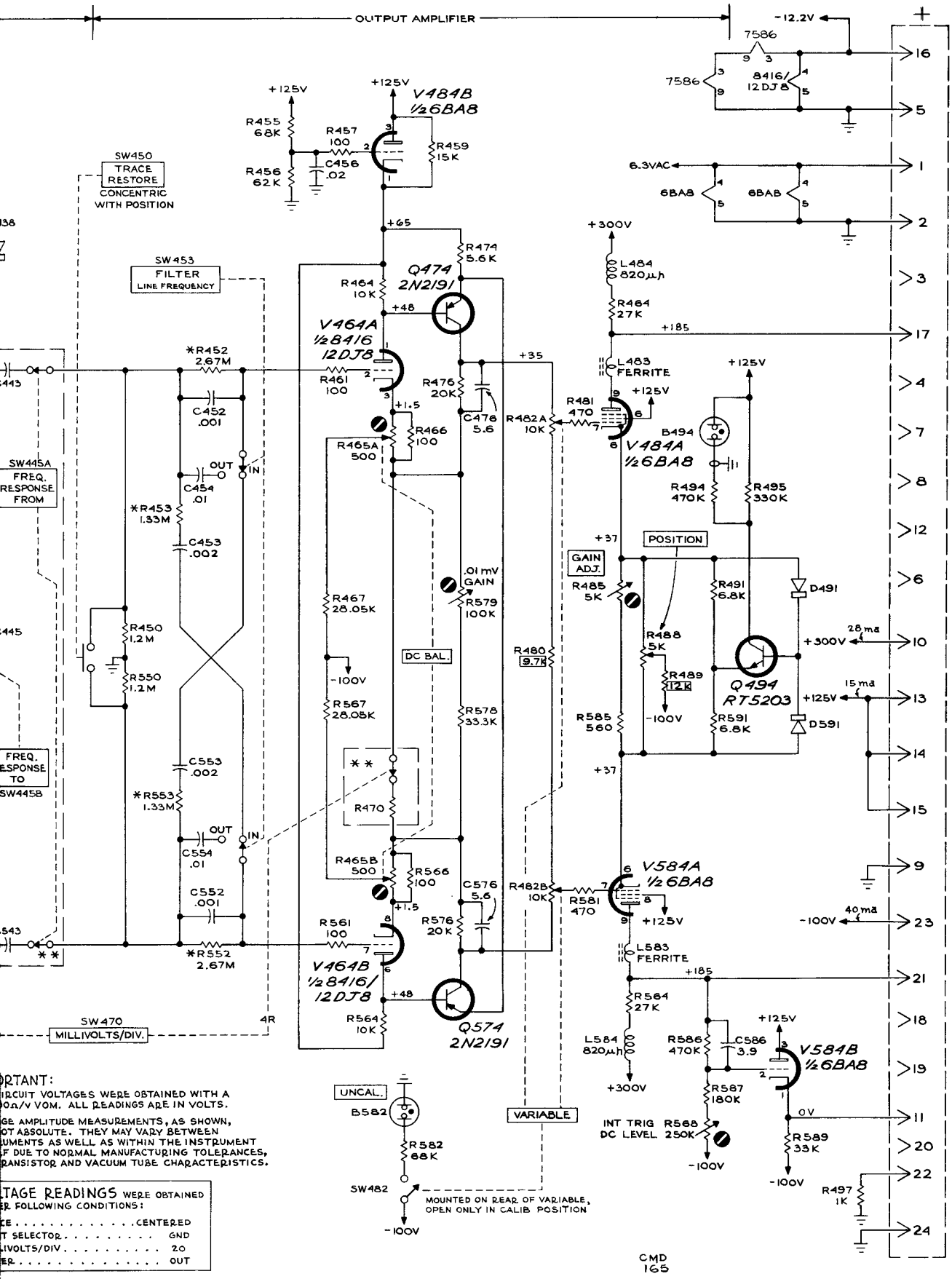

ORTANT:
IRCUIT VOLTAGES WERE OBTAINED WITH A
00Ω/V VOM. ALL READINGS ARE IN VOLTS.
GE AMPLITUDE MEASUREMENTS, AS SHOWN,
OT ABSOLUTE. THEY MAY VARY BETWEEN
UMENTS AS WELL AS WITHIN THE INSTRUMENT
F DUE TO NORMAL MANUFACTURING TOLERANCES,
RANSISTOR AND VACUUM TUBE CHARACTERISTICS.

LTAGE READINGS WERE OBTAINED
ER FOLLOWING CONDITIONS:

CE	CENTERED
T SELECTOR	GND
IVOLTS/DIV	20
ER	OUT

C

DIFFERENTIAL AMPLIFIER
S/N 101-986

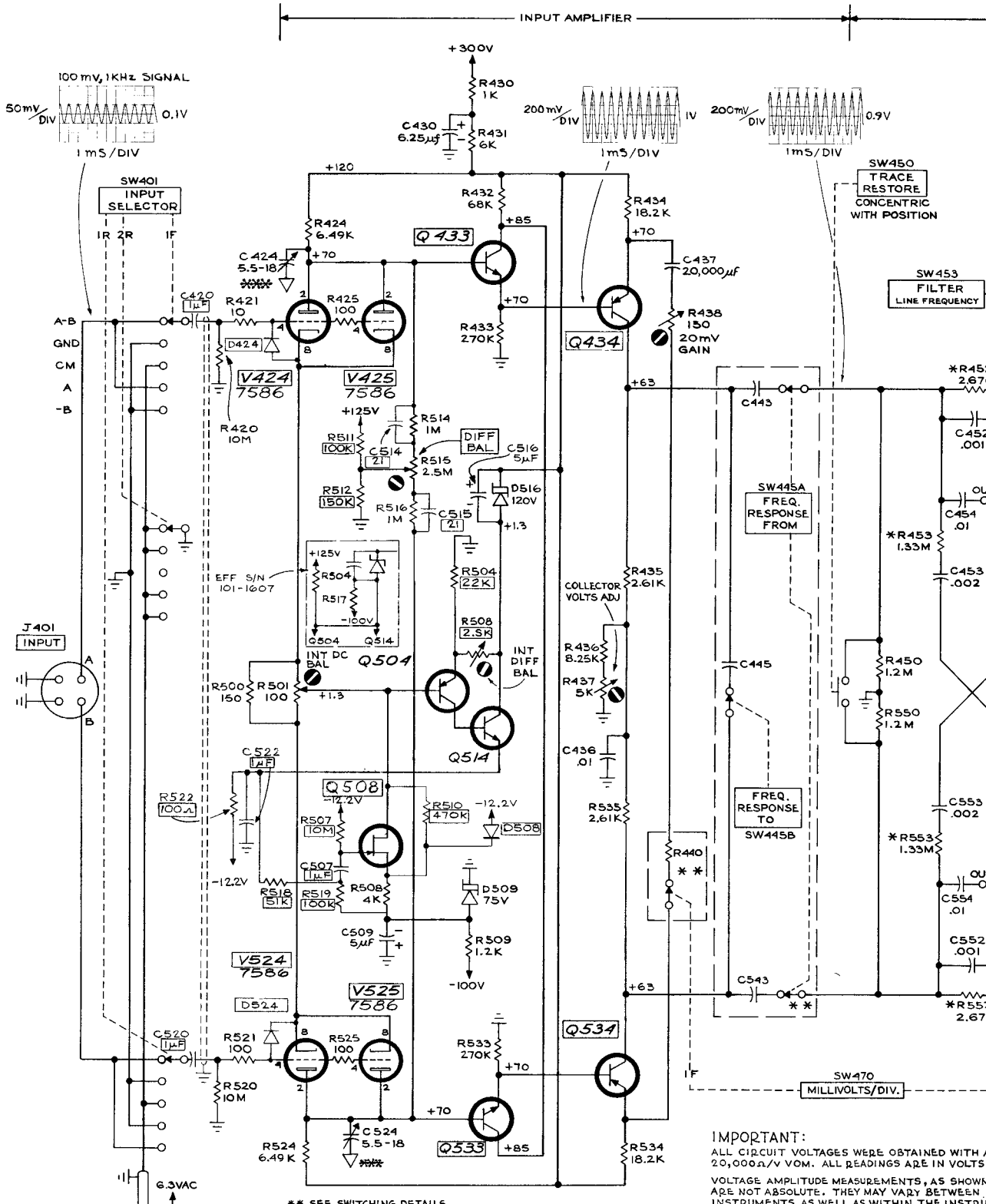

*

LINE FREQ.	R452	R453	R552	R553
50 ∿	3.24M	1.62M	3.24M	1.62M
60 ∿	2.67M	1.33M	2.67M	1.33M
400 ∿	420K	200K	420K	200K

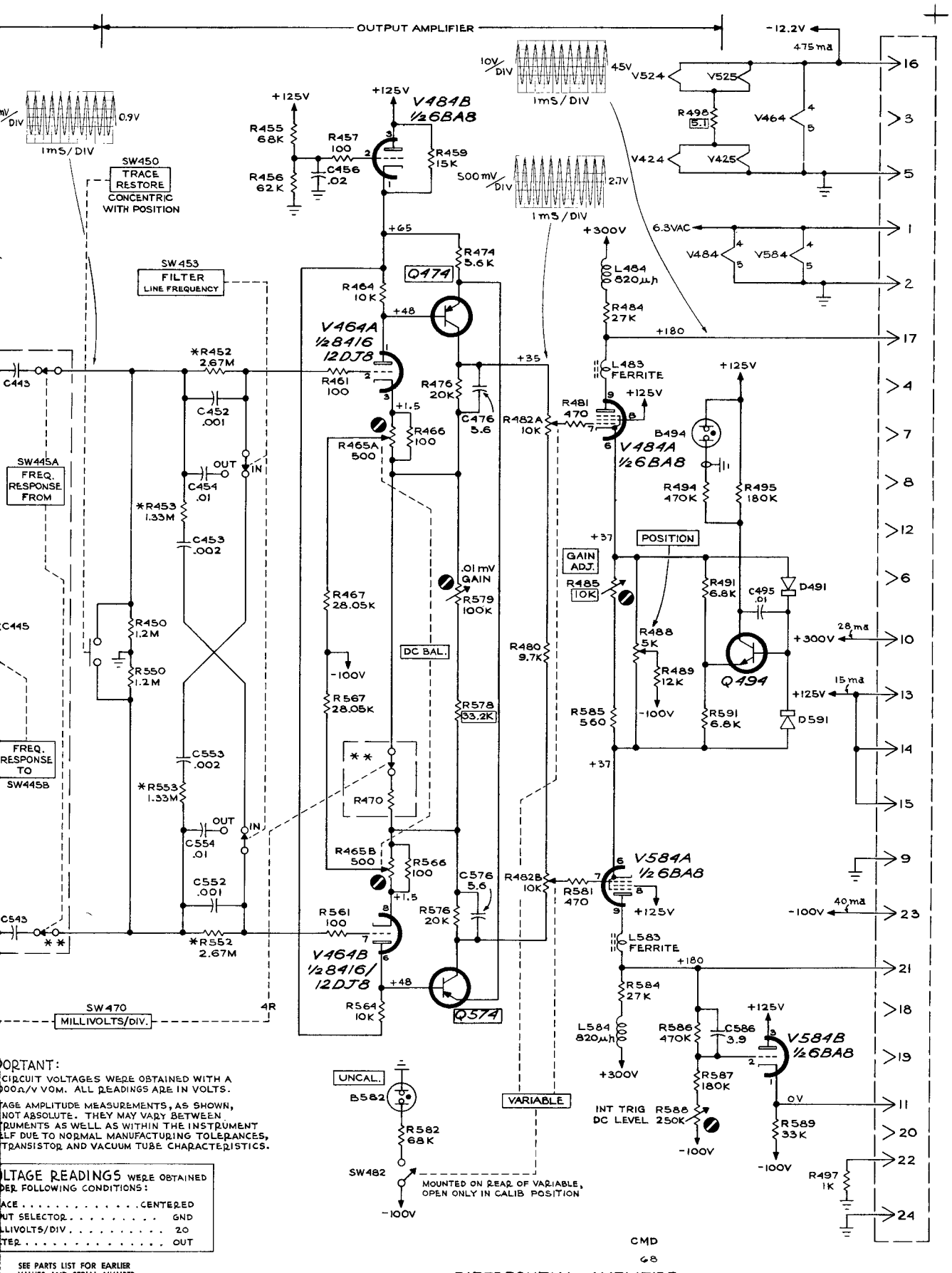

ORTANT:
CIRCUIT VOLTAGES WERE OBTAINED WITH A
000Ω/V VOM. ALL READINGS ARE IN VOLTS.
TAGE AMPLITUDE MEASUREMENTS, AS SHOWN,
NOT ABSOLUTE. THEY MAY VARY BETWEEN
TRUMENTS AS WELL AS WITHIN THE INSTRUMENT
LF DUE TO NORMAL MANUFACTURING TOLERANCES,
TRANSISTOR AND VACUUM TUBE CHARACTERISTICS.

LTAGE READINGS WERE OBTAINED
DER FOLLOWING CONDITIONS:
ACE . . . . . CENTERED
UT SELECTOR . . . . . GND
LLIVOLTS/DIV 20
TER . . . . . OUT

SEE PARTS LIST FOR EARLIER VALUES AND SERIAL NUMBER RANGES OF PARTS MARKED WITH BLUE OUTLINE.

CMD
68

DIFFERENTIAL AMPLIFIER
S/N 987-UP

FIG. 1 FRONT & REAR

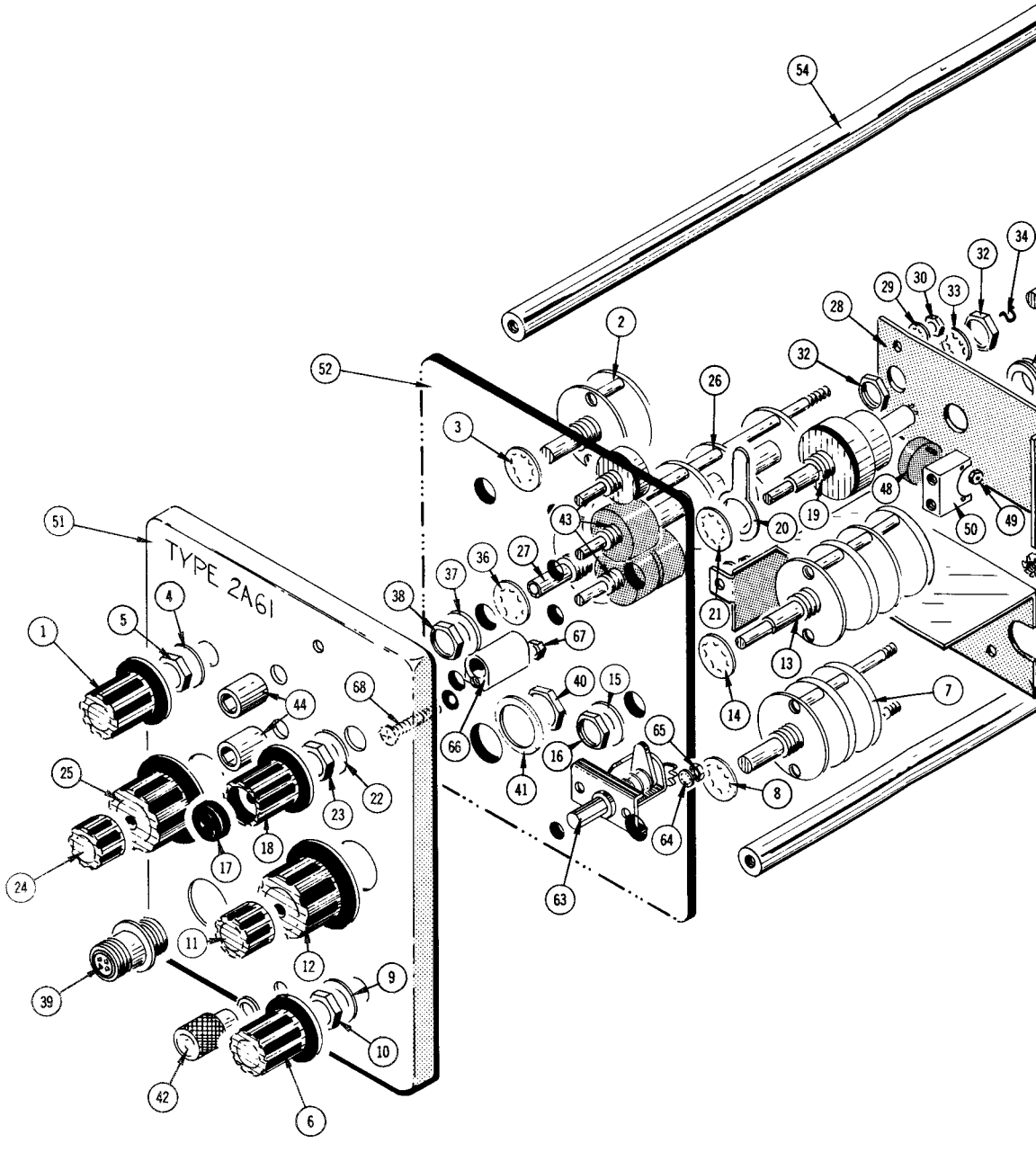

A

FIG. 1 FRONT & REAR

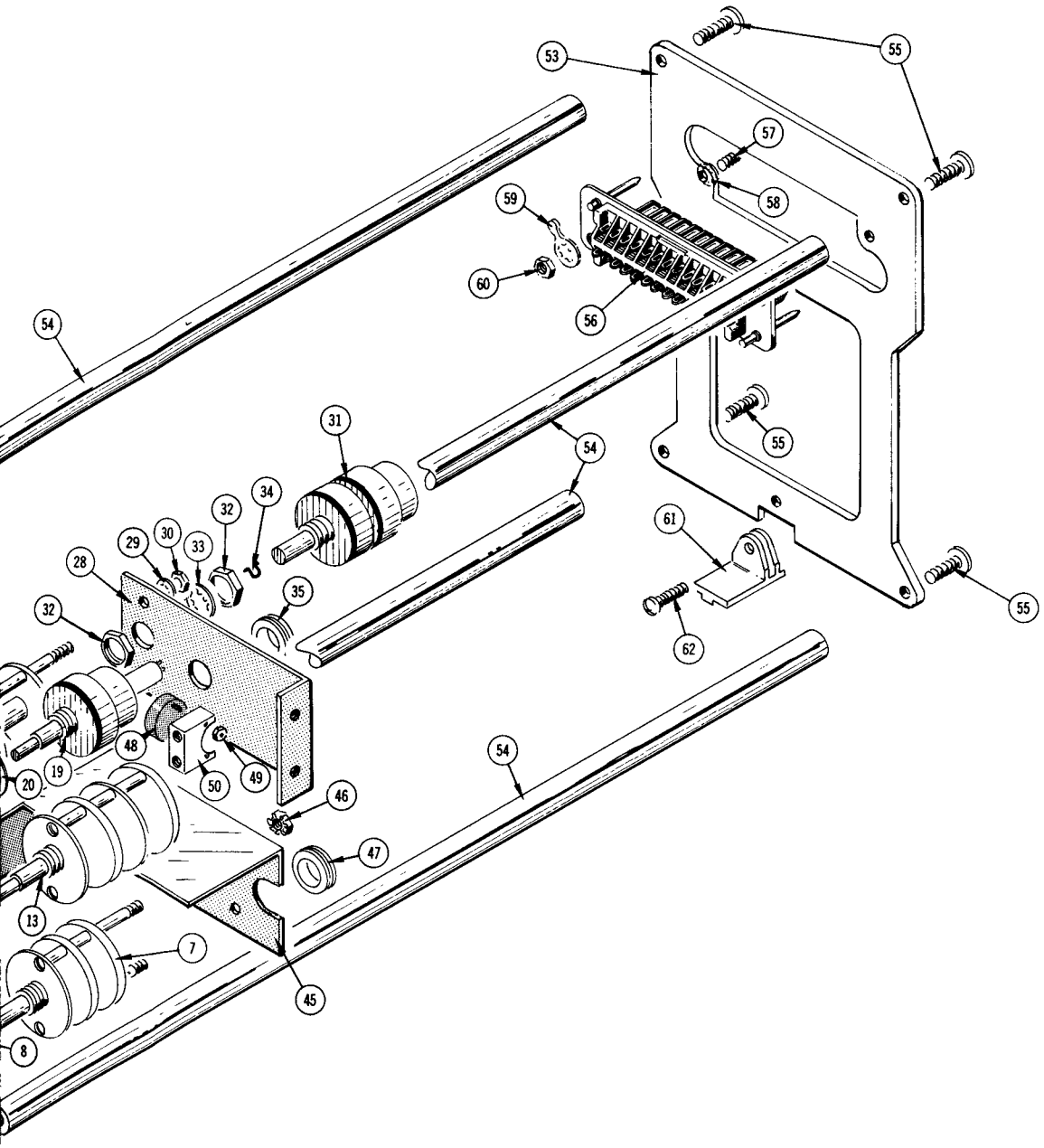

FIG. 2 CHASSIS

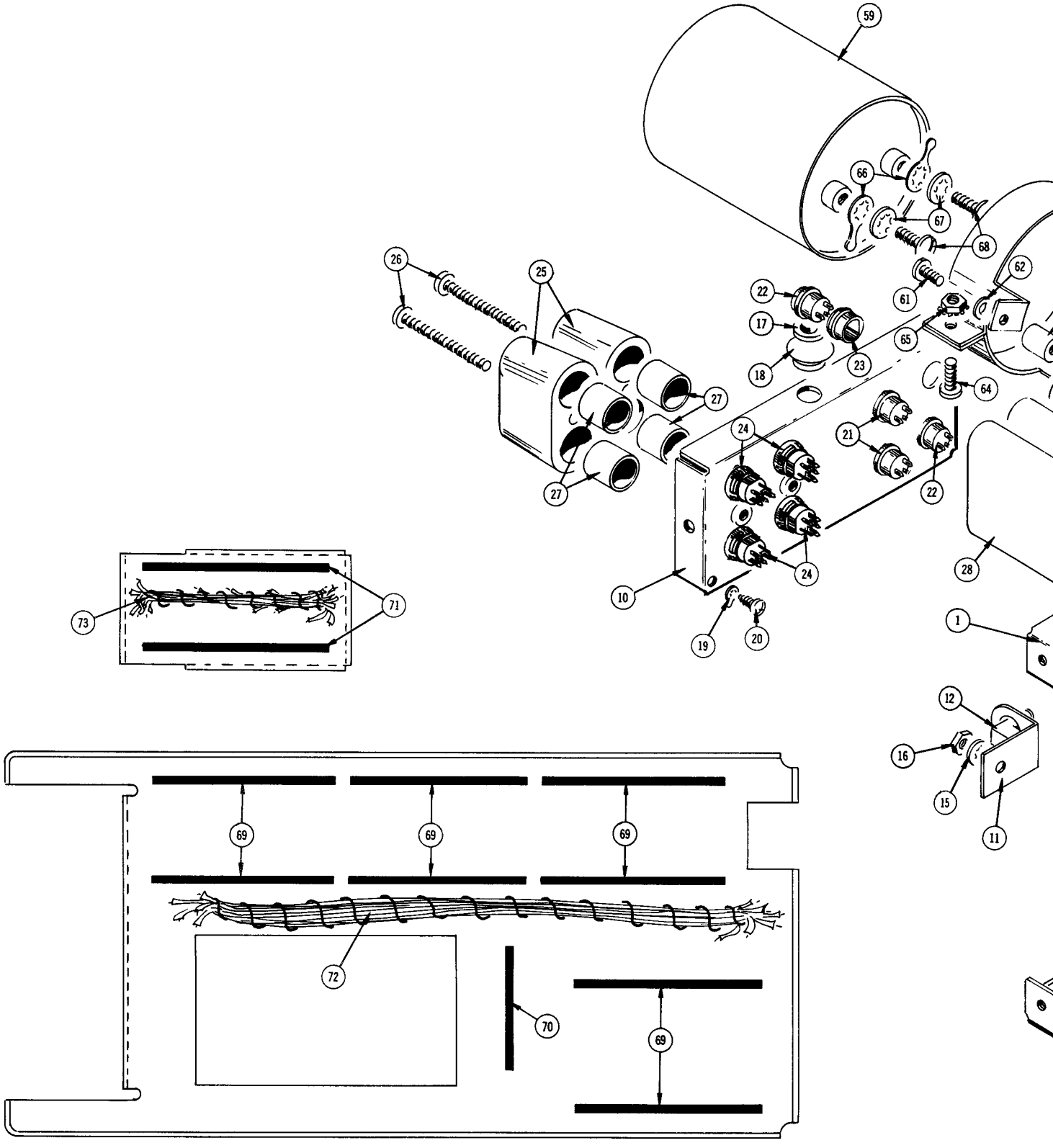

A

FIG. 2 CHASSIS

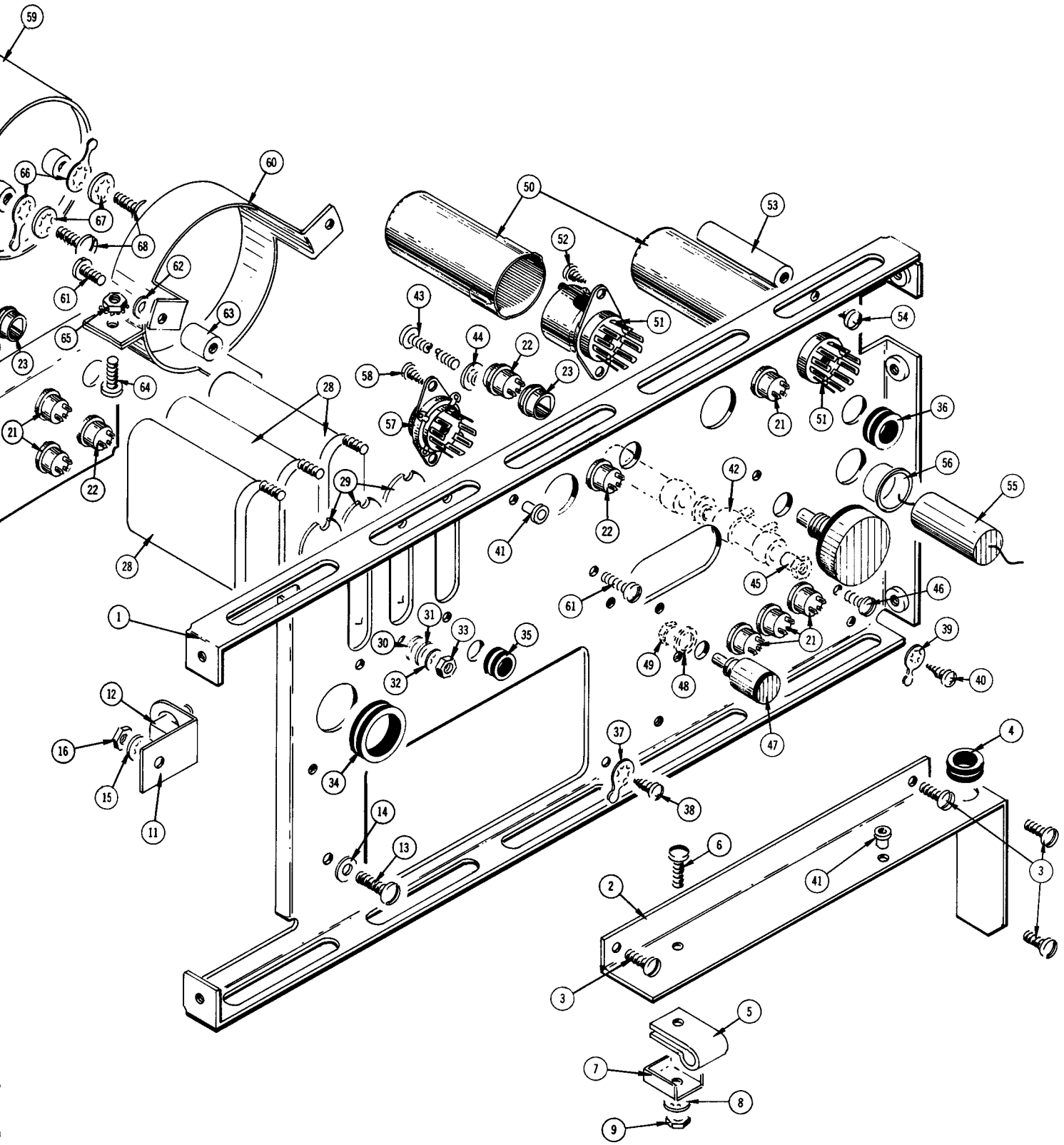

MANUAL CHANGE INFORMATION

At Tektronix, we continually strive to keep up with latest electronic developments by adding circuit and component improvements to our instruments as soon as they are developed and tested.

Sometimes, due to printing and shipping requirements, we can't get these changes immediately into printed manuals. Hence, your manual may contain new change information on following pages. If it does not, your manual is correct as printed.

TEXT CORRECTION

Section 1 Characteristics

Page 1-1 Common Mode Rejection Ratio

CHANGE: Performance Requirement to read:-

50,000:1 between 20 Hz and 10 kHz, 5 V peak to peak common mode sine-wave input.

Section 3 Circuit Description

Page 3-1 INPUT AMPLIFIER

Input Selector

CHANGE: line 1, paragraph 1 to read:

Input signals are fed from the Input connector, J401, through C420 and C520 to

CHANGE: line 5, paragraph 1 to read:

grids of V524, V525 are connected to ground through C520.

CHANGE: line 2, paragraph 2 to read:

V424, and V425 are grounded through C420 and -B input is connected to

CHANGE: line 2, paragraph 5 to read:

both grids are connected to ground through C420 and C520. The signal is not

First Stage

DELETE: paragraph 3 and insert the following:

Two provisions have been made to prevent input terminal current during turn-on, or after a momentary power outage; (1) Input coupling

capacitors C420 and C520 prevent any direct current from flowing to the input terminals. (2) A circuit which delays application of cathode current to the input nuvistors for approximately 30 seconds, allowing time for the nuvistor heaters to warm up.

A constant current cathode supply, Q508, provides current for the input nuvistors.

At instrument turn-on, the junction of R518, C507 and R519 moves to approximately -33 volts, causing Q508 gate to move to -33 volts. Current through R508, D508 clamps the source of Q508 at approxiamtely -11.6 volts, reverse biasing Q508, holding Q508 cut off, removing the current source for the input nuvistors.

C507 charges toward -12.2 volts on a 10 second time constant. When Q508 gate reaches approximatley -16 volts, Q508 starts to conduct. At approxiamtely -14 volts on Q508 gate, D508 is reverse biased and normal operating levels are reached (approxiamtely 30 seconds after turn-on).

During the time that Q508 is reverse biased, current through R510 allows the bootstrap amplifier Q504, Q514 to set the nuvistor plate voltage at approximately +110 volts, protecting the following stages from damage during warmup.

During normal operation the constant current supply functions as follows: Zener diode D509 sets the voltage at one end of R508 at -75 volts. The other end of R508 is set at approxiamtely -10 volts by the -12.2 volts on Q508 gate. As the voltage is fixed at both ends of R508, the current through R508 must be constant. This current is the only source for the cathodes of the input nuvistors. Input tube current is therefore a function of current through R508.

Section 5 Performance Check

Page 5-5 Lower Frequency Limited Response

CHANGE: last line of step n to read:-

CRT. Decay time, 1.6 to 2.8 seconds.

Section 6 Calibration

Page 6-23 Check Lower Frequency Limited Response

CHANGE: last line of step o to read:-

the Type 561A. Decay time, 1.6 to 2.8 seconds.

PARTS LIST CORRECTION

REMOVE:

D424	152-0246-00	Silicon, low leakage			
D524	152-0246-00	Silicon, low leakage			

CHANGE TO:

C507	283-0059-00	1 µF	Cer	25 V	
Q433	151-0190-00	Silicon		2N3904	
Q508	151-1022-00	TO-18		2N4392	Selected
Q533	151-0190-00	Silicon		2N3904	
R507	316-0106-00	10 MΩ	1/4 W		10%

ADD:

C420	295-0114-00	1 µF	checked		
C514	281-0579-00	21 pF	Cer	500 V	

C515	281-0579-00	21 pF	Cer	500 V
C520	295-0114-00	1 µF	checked	
D508	152-0185-00	Diode, signal		
R510	315-0474-00	470 k	1/4 W	5%
R518	315-0513-00	51 k	1/4 W	5%
R519	315-0104-00	100 k	1/4 W	5%

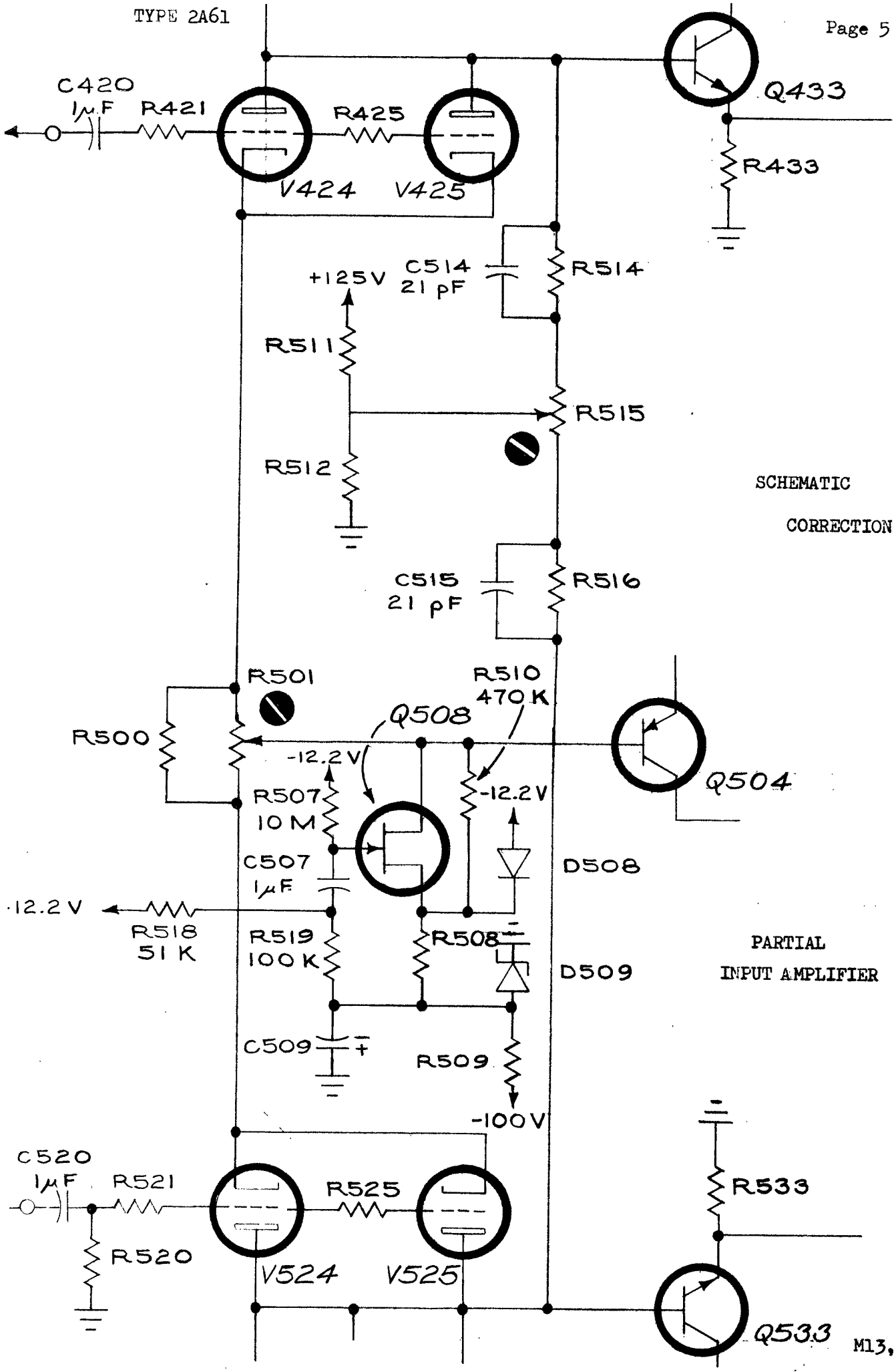

SCHEMATIC

CORRECTION

PARTIAL

INPUT AMPLIFIER

TYPE 2A61 TENT SN 2560

ELECTRICAL PARTS LIST CORRECTION

CHANGE TO:

R578	323-0339-00	33.2 kΩ	1/2 W	MF	1%

ELECTRICAL PARTS LIST AND SCHEMATIC CORRECTION

ADD:

C522	283-0059-00	1 μF	Cer	25 V	
R522	316-0101-00	100 Ω	1/4 W		±10%

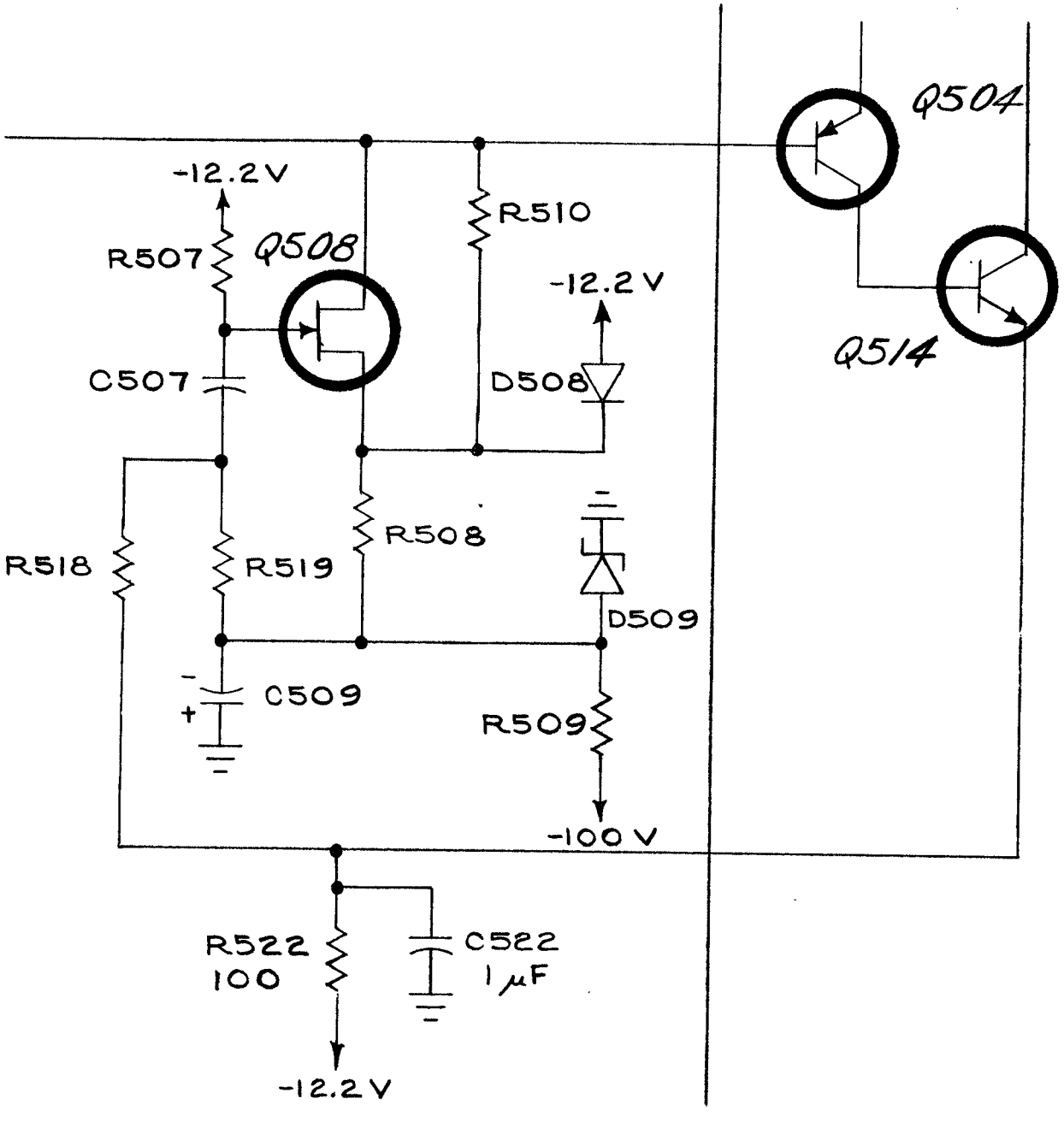

PARTIAL
DIFFERENTIAL AMPLIFIER