TROUBLESHOOTING TIPS

MODULE OR ECB	ASSEMBLY #	PROBLEM	POSSIBLE SOLUTION
Front Panel #2	A2A2	Intermittant buttons	Clean ECB button traces and align elastomer key pad.
		No buttons operational	Replace Serial Interface IC 156-5137
Primary Power Supply	A5A1	On older board versions	Check CR12 MUR860
YTO Interface	A11A1	On older board versions	Check for broken or intermittant connections on all of the pots.
Preselector Driver	A12A7	On -04 and older ECB's	Check R19 47.5 Ohm May be burnt, should be +/- 1%
Strobe IF	A13A3A4	Large noise spikes out of noise floor on screen. (On old boards)	Noisey pots R11,R50
VR	A16	Crystal resonator timed out message	Look at DAC values to see which on is railed out at 00 or FF. Replace crystal in that resonator 158-0314-00
		29 LO out of range	Look at LO out J168 on outside of VR module. Replace crystal 158-0316-00 25 Mhz crystal bad 158-0326-00, or freq. needs readjusting
		10 Khz filter	VR #3 out of adjustment. A dip in the freq. resp. at the peak of its filter shape causes the auto adj. routine to find the wrong peak. Adj. for one peak.
		Bursting noise during Res. BW cal.	May be a oscillation on one of the resonators. Find and replace noisey Vactec opto coupler 307-0476-00 . There is one in each of the six resonators.

MODULE OR ECB	ASSEMBLY #	PROBLEM	POSSIBLE SOLUTION
robe LO	A17A3	Large noise spikes out of noise floor on screen. (On old version ECB's)	Replace noisey pots.
F(s) Driver	A17A4	On -03 and older ECB's	U16 +15 shorts to ground run underneath.
Log Processor	A18/A19	Display law cal. routine fails.	Replace expander IC U32
Display Amp	A22	Compressed display	Horiz. or Vertical deflection IC U12,U16
		No display or color	Z axis IC U11
High voltage	A23	No display or out of focus	Bad HV brick
		Display dim	Red led on on HV ECB. Q10 and or Q11 Bad.
Digital Storage	A24	Distorted display	Change out delay line
LO Module	A25	Tuning range error or Can't count LO or 129 drops lock	Needs readjustment
565 MHz Module	A31	Noise spikes in phase locked spans	Check in max hold mode. Replace large Fractional- N IC.
I/O Interface	A42	Lost data	Don't unplug instrument while it's trying to power up!

TROUBLESHOOTING TIPS

MODULE OR ECB	ASSEMBLY #	PROBLEM	POSSIBLE SOLUTION
Front Panel #2	A2A2	Intermittant buttons	Clean ECB button traces and align elastomer key pad.
		No buttons operational	Replace Serial Interface IC 156-5137
Primary Power Supply	A5A1	On older board versions	Check CR12 MUR860
YTO Interface	A11A1	On older board versions	Check for broken or intermittant connections on all of the pots.
Preselector Driver	A12A7	On -04 and older ECB's	Check R19 47.5 Ohm May be burnt, should be +/- 1%
Strobe IF	A13A3A4	Large noise spikes out of noise floor on screen. (On old boards)	Noisey pots R11,R50
VR	A16	Crystal resonator timed out message	Look at DAC values to see which on is railed out at 00 or FF. Replace crystal in that resonator 158-0314-00
		29 LO out of range	Look at LO out J168 on outside of VR module. Replace crystal 158-0316-00 25 Mhz crystal bad 158-0326-00, or freq. needs readjusting
		10 Khz filter	VR #3 out of adjustment. A dip in the freq. resp. at the peak of its filter shape causes the auto adj. routine to find the wrong peak. Adj. for one peak.
		Bursting noise during Res. BW cal.	May be a oscillation on one of the resonators. Find and replace noisey Vactec opto coupler 307-0476-00 . There is one in each of the six resonators.

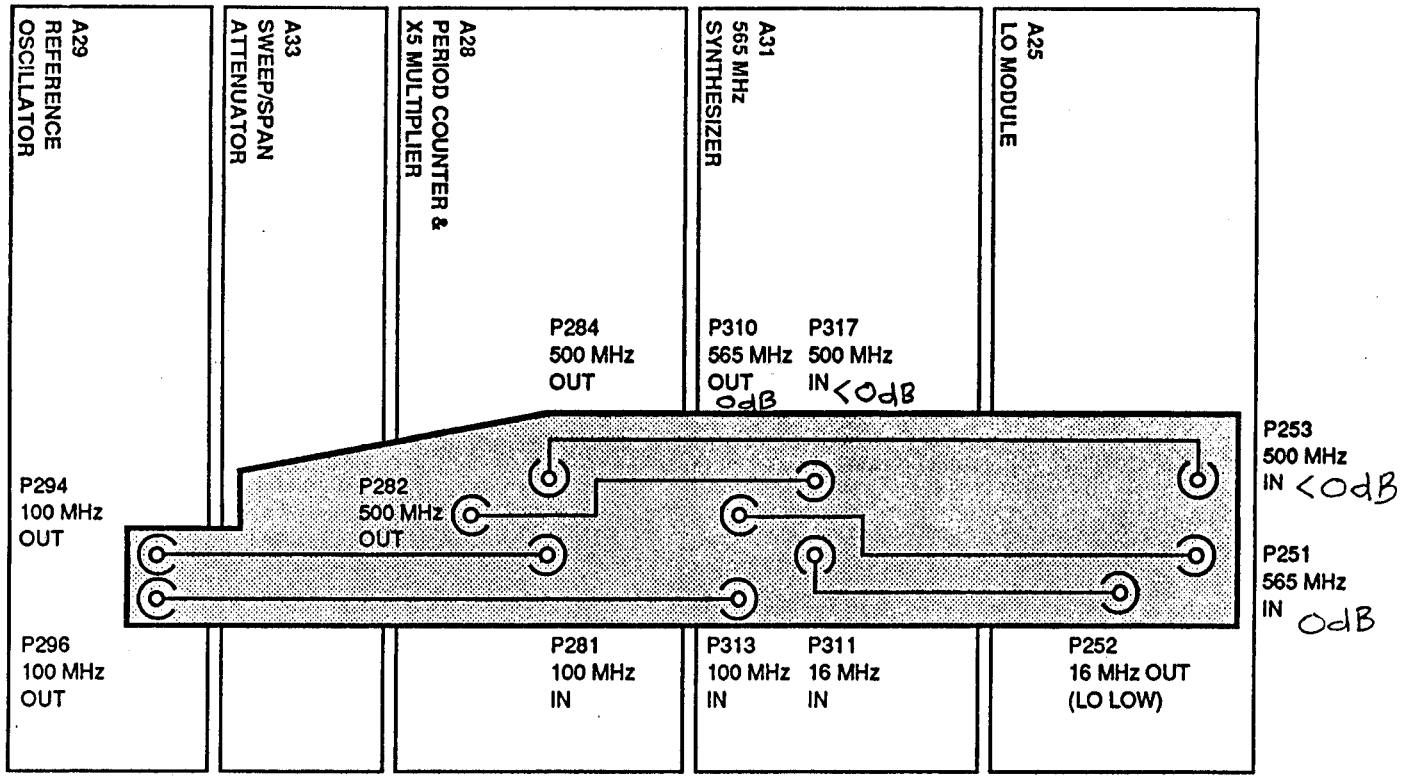

A3 FLAT FLEX INTERCONNECT ASSEMBLY

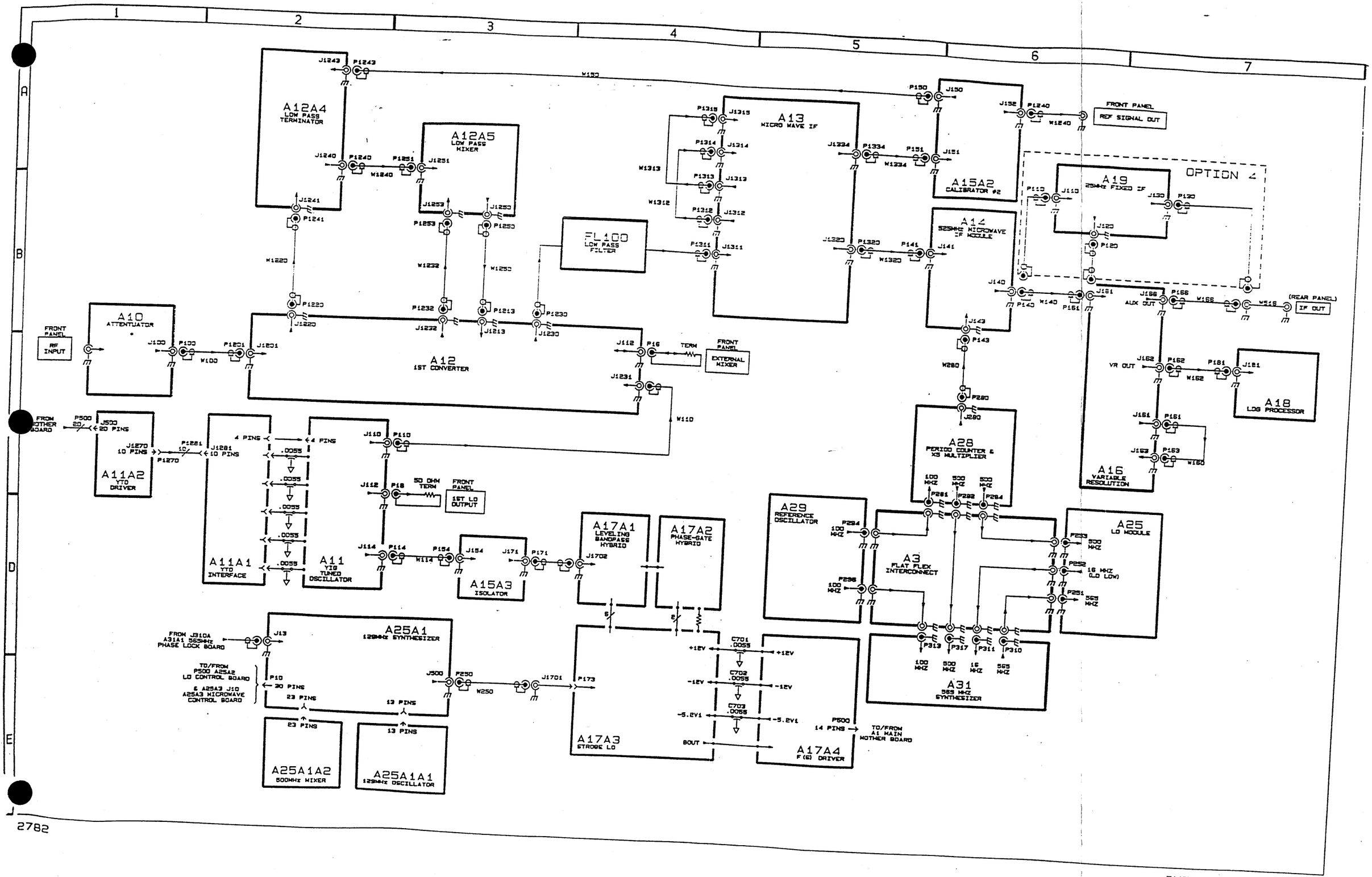

2782

INTERCONNECT 1

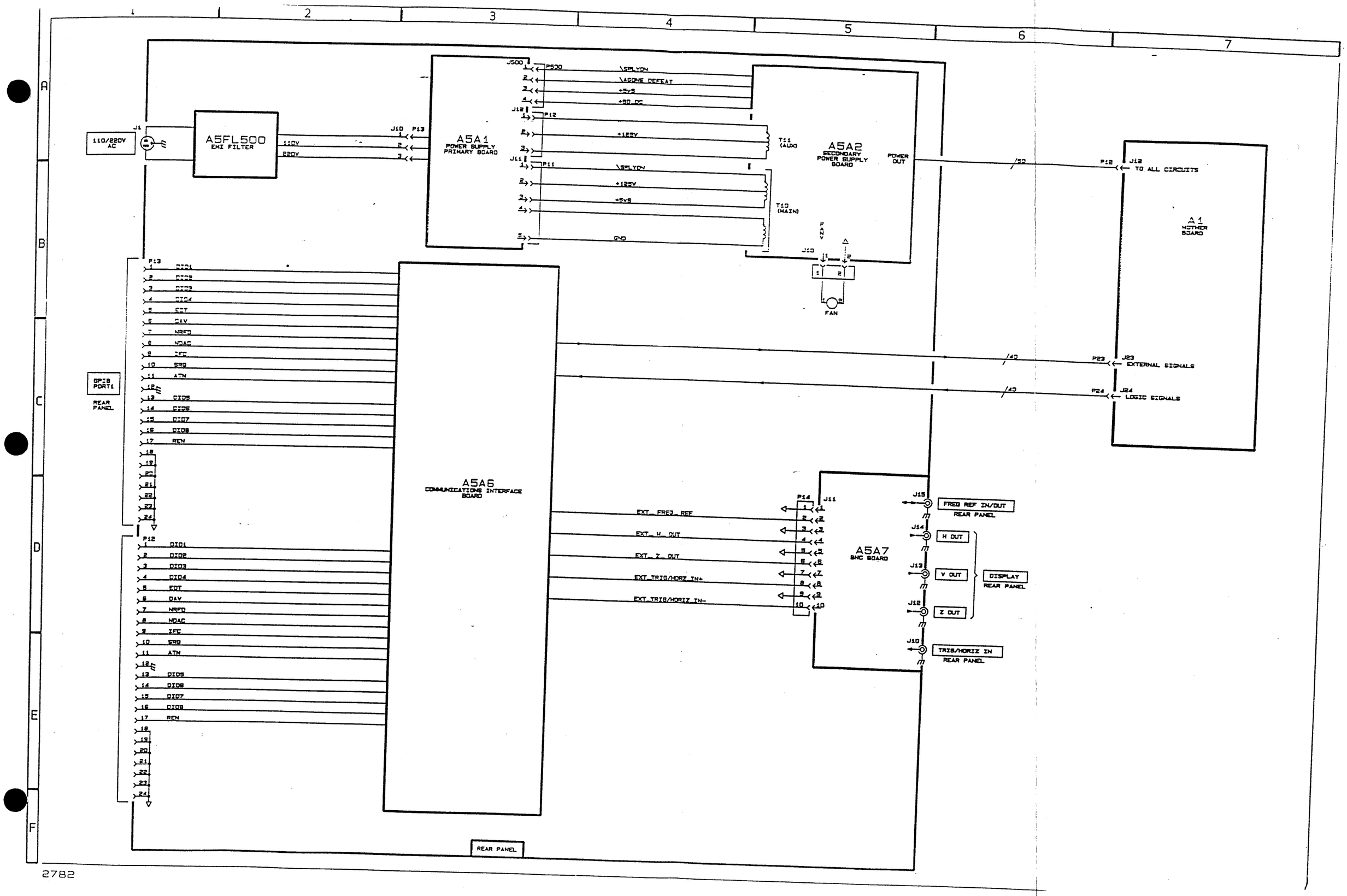
110/220V AC
J1
A5FL500
EMI FILTER
110V
220V
J10 P13
A5A1
POWER SUPPLY PRIMARY BOARD
J500
P500
\SPLYON
\ARONE DEFEAT
+5VS
+5D DC
J12
P12
+12SV
T11 (AUX)
J11
P11
\SPLYON
+12SV
+5VS
T10 (MAIN)
GND
A5A2
SECONDARY POWER SUPPLY BOARD
POWER OUT
J10
FAN
/50
P12
J12
TO ALL CIRCUITS
A1
MOTHER BOARD
/40
P23
J23
EXTERNAL SIGNALS
/40
P24
J24
LOGIC SIGNALS
GPIB PORT1
REAR PANEL
P13
DIO1
DIO2
DIO3
DIO4
EOT
DAV
NRFD
NDAC
IFC
SRQ
ATN
DIO5
DIO6
DIO7
DIO8
REN
P12
DIO1
DIO2
DIO3
DIO4
EOT
DAV
NRFD
NDAC
IFC
SRQ
ATN
DIO5
DIO6
DIO7
DIO8
REN
A5A6
COMMUNICATIONS INTERFACE BOARD
EXT_FREQ_REF
EXT_H_OUT
EXT_Z_OUT
EXT_TRIG/HORZ IN+
EXT_TRIG/HORIZ IN-
P14
J11
A5A7
BNC BOARD
J15
FREQ REF IN/OUT
REAR PANEL
J14
H OUT
J13
V OUT
J12
Z OUT
DISPLAY
REAR PANEL
J10
TRIG/HORIZ IN
REAR PANEL
REAR PANEL

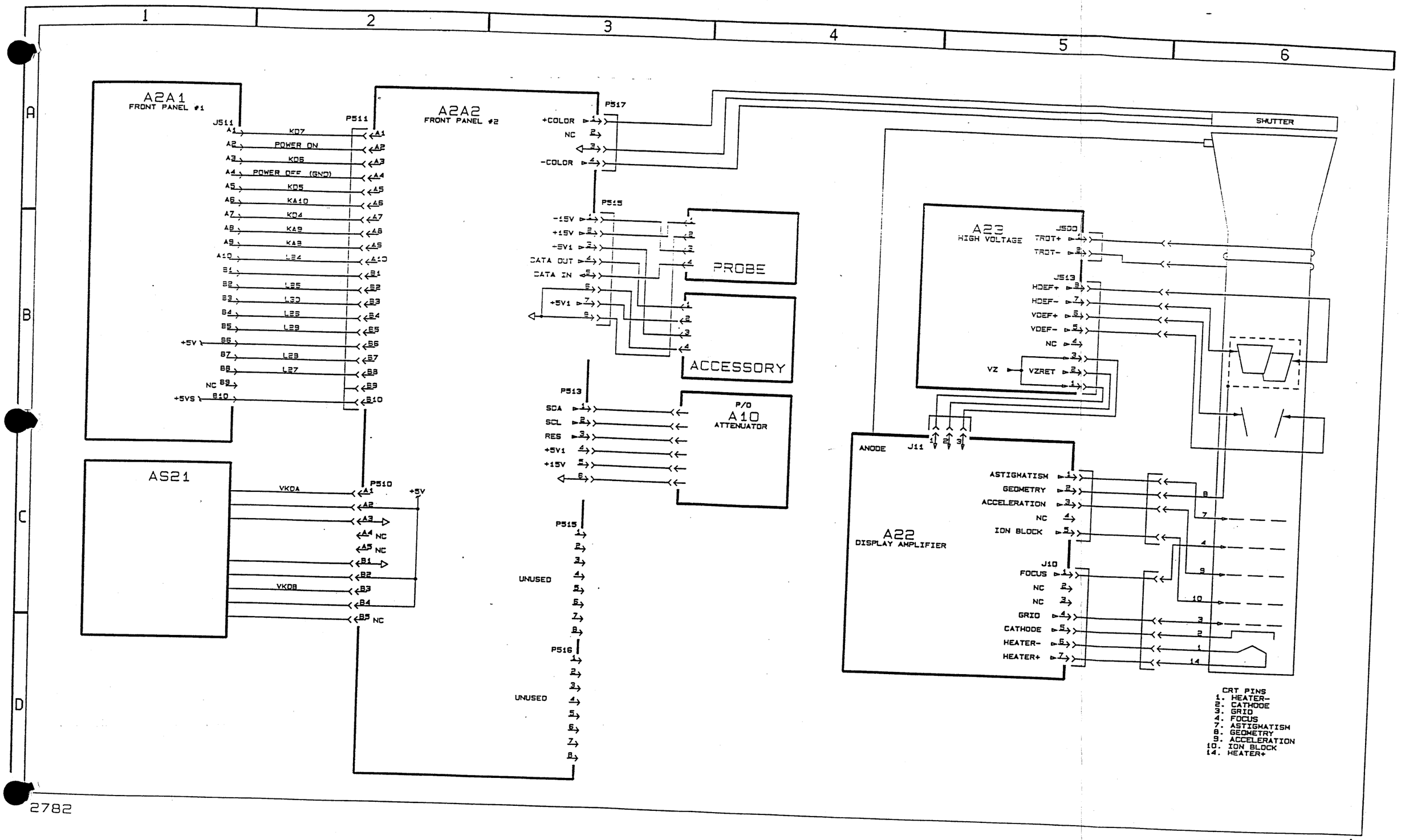
A2A1
FRONT PANEL #1
J511
P511
KD7
POWER ON
KD6
POWER OFF (GND)
KD5
KA10
KD4
KA9
KA8
L24
L25
L30
L26
L29
L28
L27
+5V
NC
+5VS
A2A2
FRONT PANEL #2
P517
+COLOR
NC
-COLOR
P515
-15V
+15V
+5V1
DATA OUT
DATA IN
PROBE
ACCESSORY
P513
SDA
SCL
RES
P/O
A10
ATTENUATOR
AS21
VKDA
VKDB
P510
UNUSED
P516
SHUTTER
A23
HIGH VOLTAGE
J500
TROT+
TROT-
J513
HDEF+
HDEF-
VDEF+
VDEF-
VZ
VZRET
ANODE
J11
A22
DISPLAY AMPLIFIER
ASTIGMATISM
GEOMETRY
ACCELERATION
ION BLOCK
J10
FOCUS
GRID
CATHODE
HEATER-
HEATER+
CRT PINS
1. HEATER-
2. CATHODE
3. GRID
4. FOCUS
7. ASTIGMATISM
8. GEOMETRY
9. ACCELERATION
10. ION BLOCK
14. HEATER+
2782

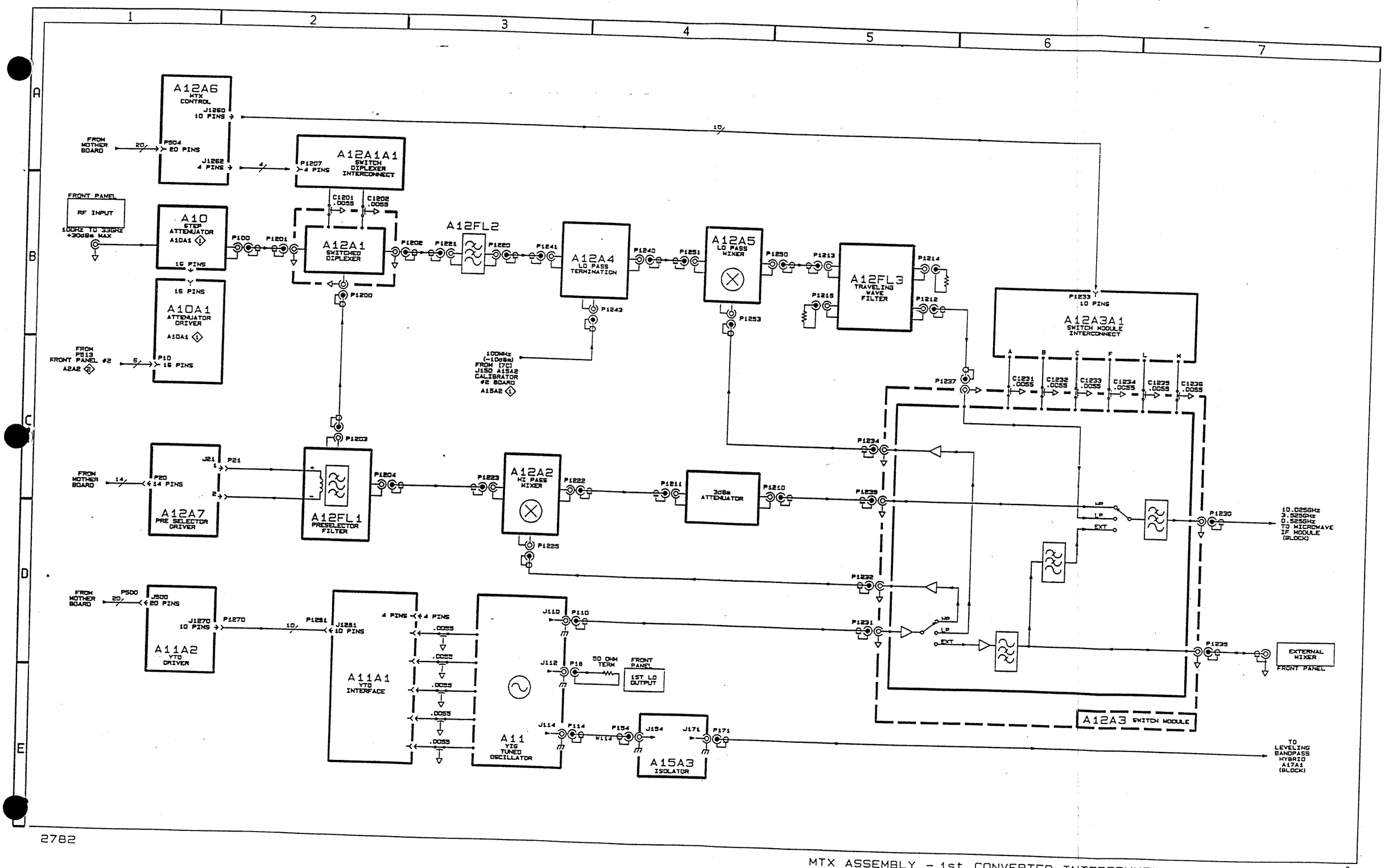

2782

MTX ASSEMBLY - 1st CONVERTER INTERCONNECT / BLOCK DIAGRAM 4

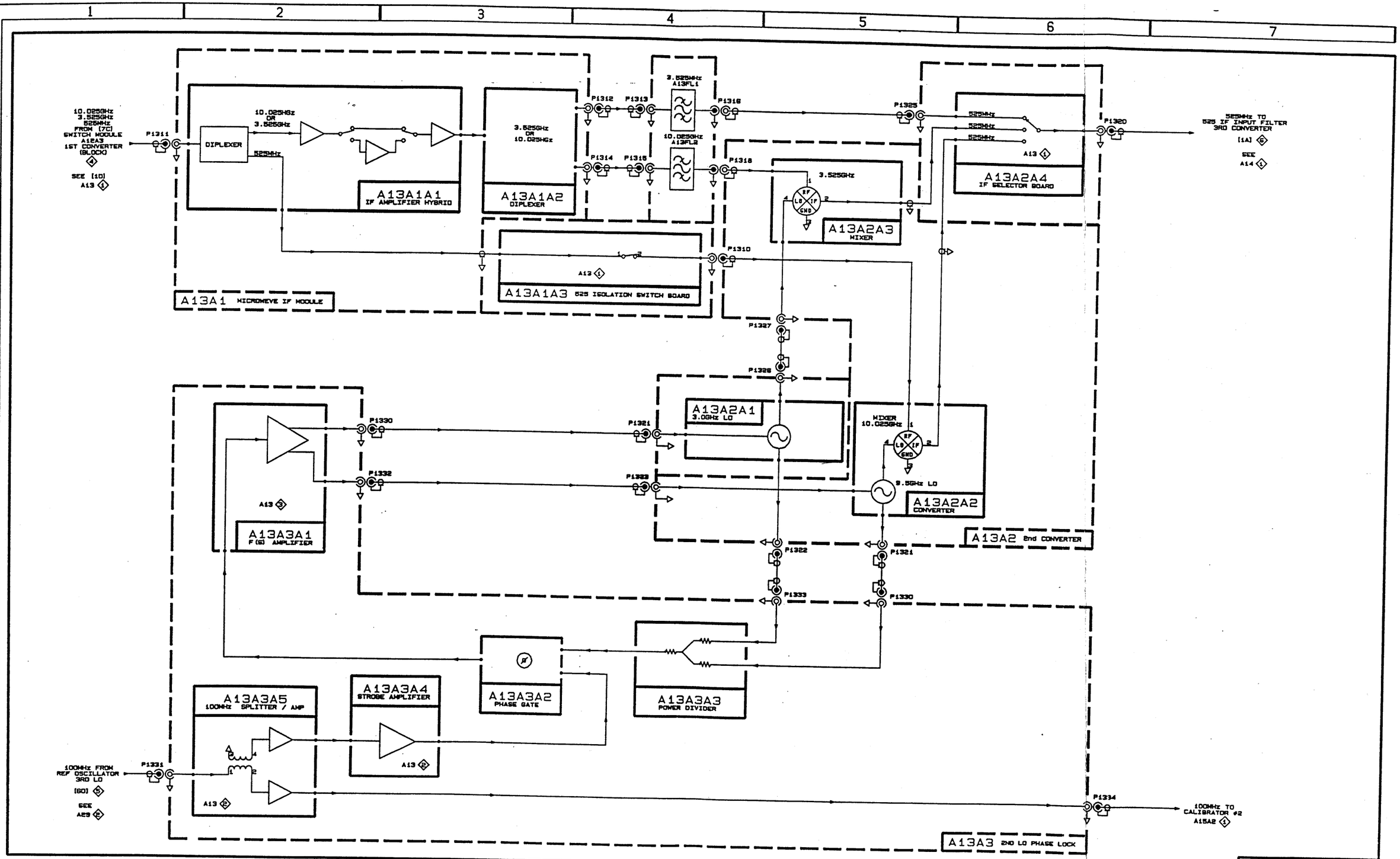

2782

525MHz MICROWAVE IF ASSEMBLY – 2nd CONVERTER INTERCONNECT / BLOCK DIAGRAM (5)

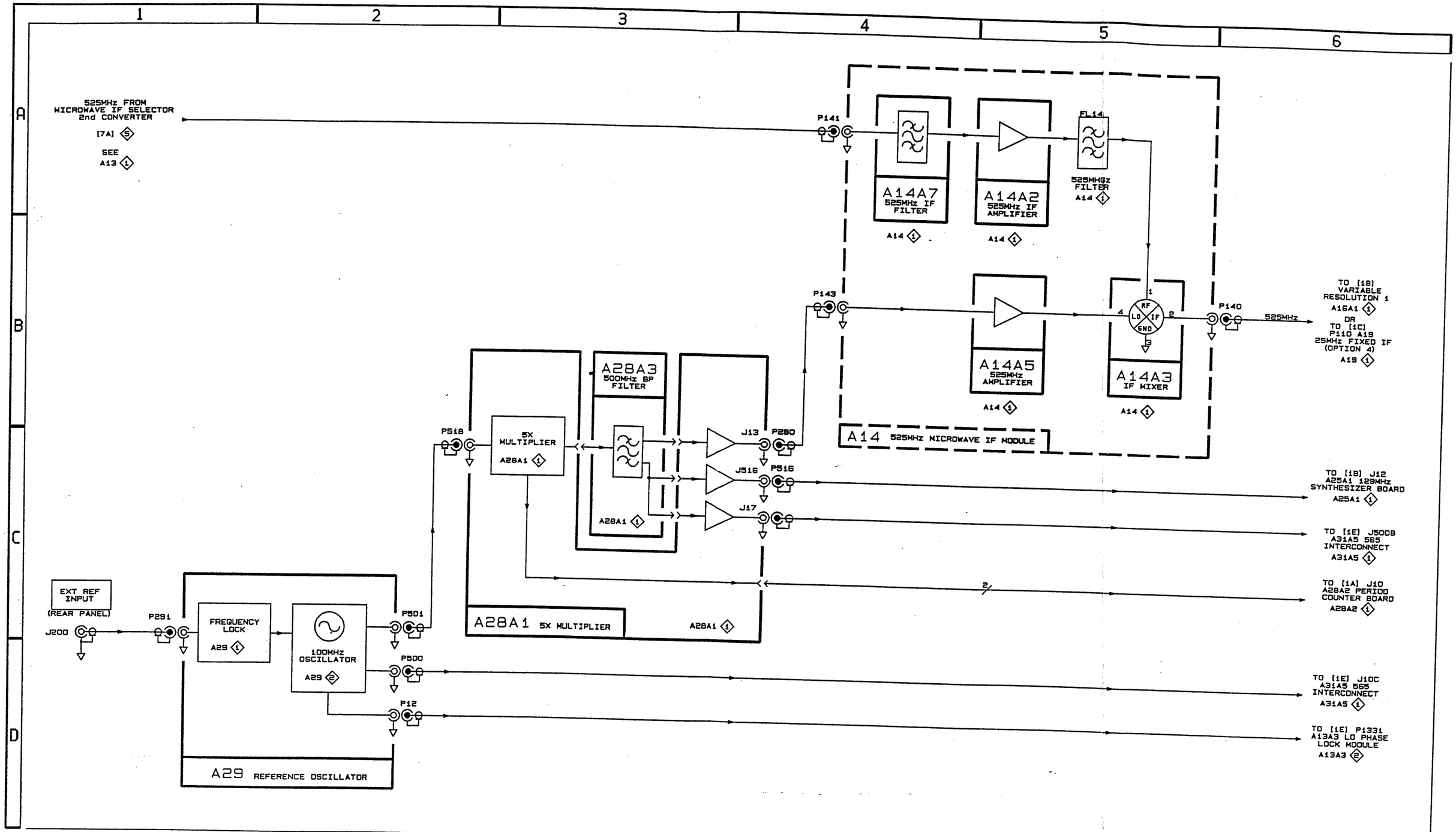

2782

525MHz IF ASSEMBLY - 3rd CONVERTER INTERCONNECT / BLOCK DIAGRAM 6

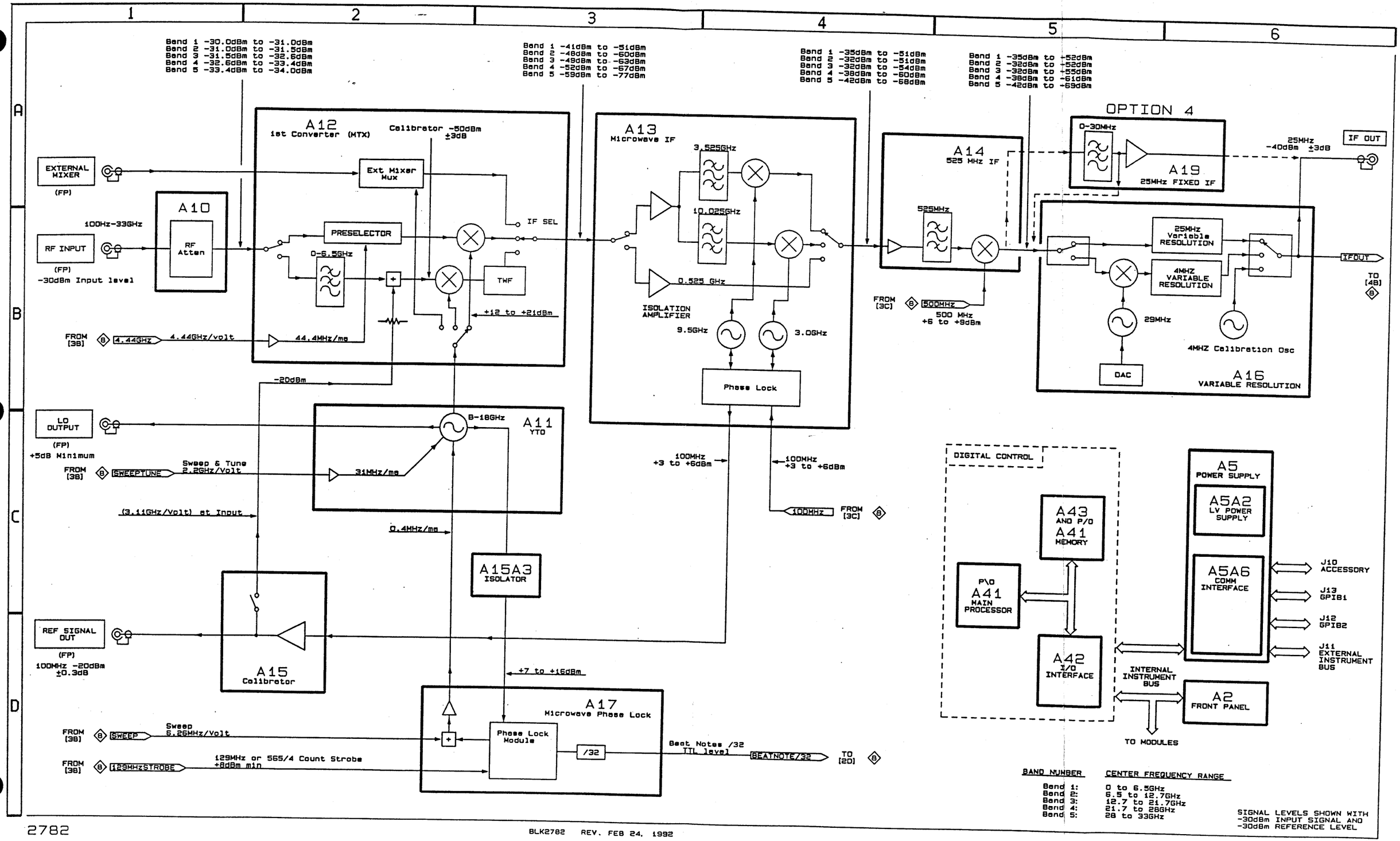
1
2
3
4
5
6
A
B
C
D
Band 1 -30.0dBm to -31.0dBm
Band 2 -31.0dBm to -31.5dBm
Band 3 -31.5dBm to -32.6dBm
Band 4 -32.6dBm to -33.4dBm
Band 5 -33.4dBm to -34.0dBm
Band 1 -41dBm to -51dBm
Band 2 -48dBm to -60dBm
Band 3 -49dBm to -63dBm
Band 4 -52dBm to -67dBm
Band 5 -59dBm to -77dBm
Band 1 -35dBm to -51dBm
Band 2 -32dBm to -51dBm
Band 3 -32dBm to -54dBm
Band 4 -38dBm to -60dBm
Band 5 -42dBm to -68dBm
Band 1 -35dBm to +52dBm
Band 2 -32dBm to +52dBm
Band 3 -32dBm to +55dBm
Band 4 -38dBm to +61dBm
Band 5 -42dBm to +59dBm
EXTERNAL MIXER
(FP)
100Hz-33GHz
RF INPUT
(FP)
-30dBm Input level
A10
RF Atten
A12
1st Converter (MTX)
Calibrator -50dBm ±3dB
Ext Mixer Mux
PRESELECTOR
0-6.5GHz
IF SEL
TWF
+12 to +21dBm
FROM [3B]
4.44GHz
4.44GHz/volt
44.4MHz/ms
-20dBm
A13
Microwave IF
3.525GHz
10.025GHz
0.525 GHz
ISOLATION AMPLIFIER
9.5GHz
3.0GHz
Phase Lock
A14
525 MHz IF
525MHz
FROM [3C]
500MHz
500 MHz +6 to +9dBm
OPTION 4
0-30MHz
A19
25MHz FIXED IF
25MHz -40dBm ±3dB
IF OUT
25MHz Variable RESOLUTION
4MHZ VARIABLE RESOLUTION
29MHz
4MHZ Calibration Osc
DAC
A16
VARIABLE RESOLUTION
IFOUT
TO [4B]
LO OUTPUT
(FP)
+5dB Minimum
FROM [3B]
SWEEPTUNE
Sweep & Tune 2.26Hz/Volt
A11
YTO
8-18GHz
31MHz/ms
(3.11GHz/Volt) at Input
0.4MHz/ms
100MHz +3 to +6dBm
100MHz
FROM [3C]
A15A3
ISOLATOR
REF SIGNAL OUT
(FP)
100MHz -20dBm ±0.3dB
A15
Calibrator
+7 to +16dBm
A17
Microwave Phase Lock
Phase Lock Module
/32
FROM [3B]
SWEEP
Sweep 6.26MHz/Volt
FROM [3B]
129MHzSTROBE
129MHz or 565/4 Count Strobe +8dBm min
Beat Notes /32 TTL level
BEATNOTE/32
TO [2D]
DIGITAL CONTROL
A43 AND P/O A41 MEMORY
P\O A41 MAIN PROCESSOR
A42 I/O INTERFACE
A5 POWER SUPPLY
A5A2 LV POWER SUPPLY
A5A6 COMM INTERFACE
J10 ACCESSORY
J13 GPIB1
J12 GPIB2
J11 EXTERNAL INSTRUMENT BUS
INTERNAL INSTRUMENT BUS
A2 FRONT PANEL
TO MODULES
BAND NUMBER
CENTER FREQUENCY RANGE
Band 1: 0 to 6.5GHz
Band 2: 6.5 to 12.7GHz
Band 3: 12.7 to 21.7GHz
Band 4: 21.7 to 28GHz
Band 5: 28 to 33GHz
SIGNAL LEVELS SHOWN WITH -30dBm INPUT SIGNAL AND -30dBm REFERENCE LEVEL

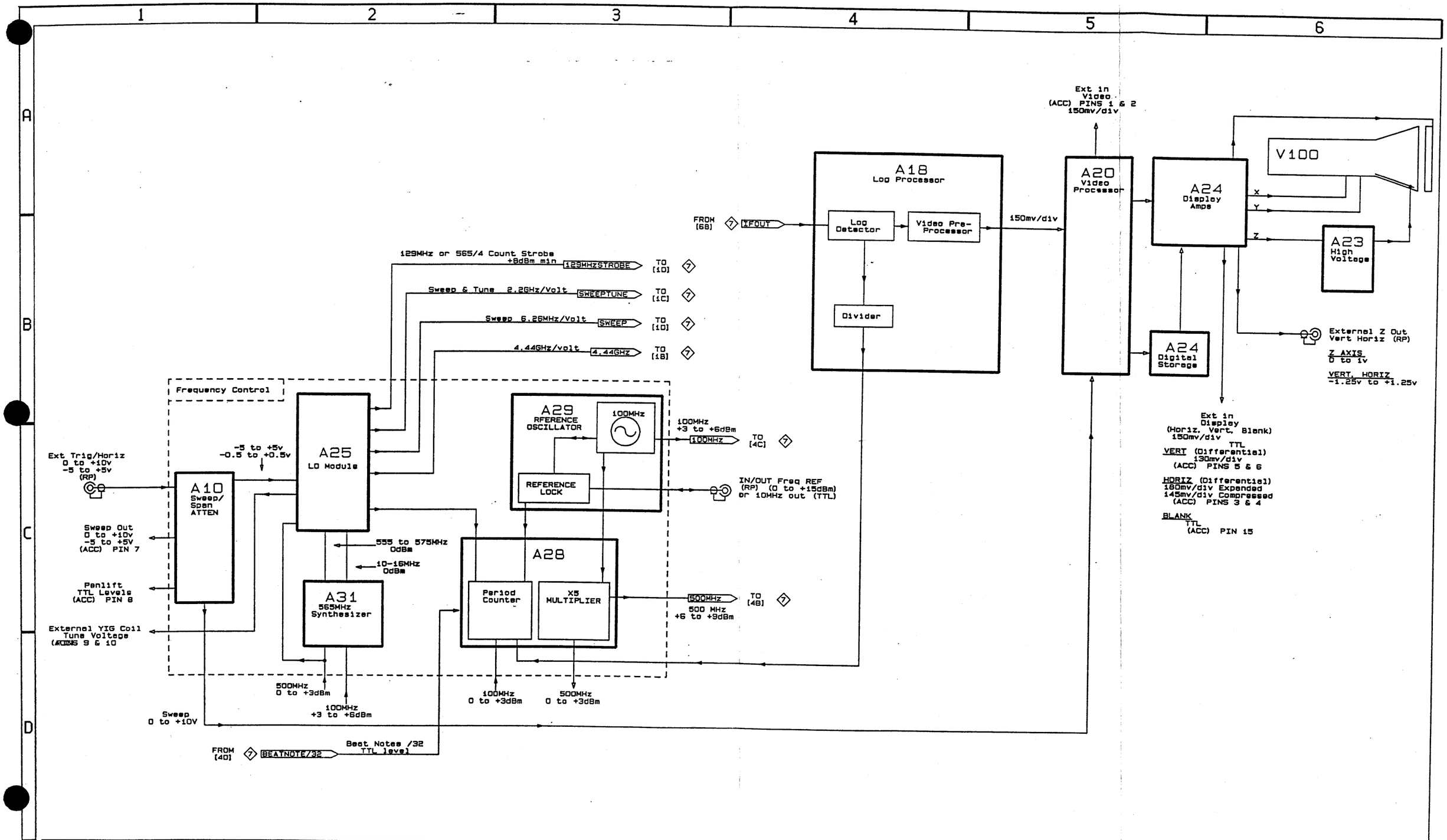
1
2
3
4
5
6
A
B
C
D
Ext in
Video
(ACC) PINS 1 & 2
150mv/div
A18
Log Processor
Log Detector
Video Pre-Processor
Divider
FROM [6B]
IFOUT
150mv/div
A20
Video Processor
A24
Display Amps
X
Y
Z
V100
A23
High Voltage
A24
Digital Storage
External Z Out
Vert Horiz (RP)
Z AXIS
0 to 1v
VERT, HORIZ
-1.25v to +1.25v
Ext in
Display
(Horiz, Vert, Blank)
150mv/div
TTL
VERT (Differential)
130mv/div
(ACC) PINS 5 & 6
HORIZ (Differential)
180mv/div Expanded
145mv/div Compressed
(ACC) PINS 3 & 4
BLANK
TTL
(ACC) PIN 15
129MHz or 565/4 Count Strobe
+8dBm min
129MHzSTROBE
TO [1D]
Sweep & Tune 2.2GHz/Volt
SWEEPTUNE
TO [1C]
Sweep 6.26MHz/Volt
SWEEP
TO [1D]
4.44GHz/volt
4.44GHz
TO [1B]
Frequency Control
A25
LO Module
-5 to +5v
-0.5 to +0.5v
A29
RFERENCE OSCILLATOR
100MHz
REFERENCE LOCK
100MHz
+3 to +6dBm
100MHz
TO [4C]
IN/OUT Freq REF
(RP) (0 to +15dBm)
or 10MHz out (TTL)
Ext Trig/Horiz
0 to +10v
-5 to +5v
(RP)
A10
Sweep/ Span ATTEN
Sweep Out
0 to +10v
-5 to +5V
(ACC) PIN 7
Penlift
TTL Levels
(ACC) PIN 8
External YIG Coil
Tune Voltage
(ACC) PINS 9 & 10
555 to 575MHz
0dBm
10-16MHz
0dBm
A31
565MHz
Synthesizer
A28
Period Counter
X5 MULTIPLIER
500MHz
TO [4B]
500 MHz
+6 to +9dBm
500MHz
0 to +3dBm
100MHz
+3 to +6dBm
100MHz
0 to +3dBm
500MHz
0 to +3dBm
Sweep
0 to +10V
FROM [4D]
BEATNOTE/32
Beat Notes /32
TTL level

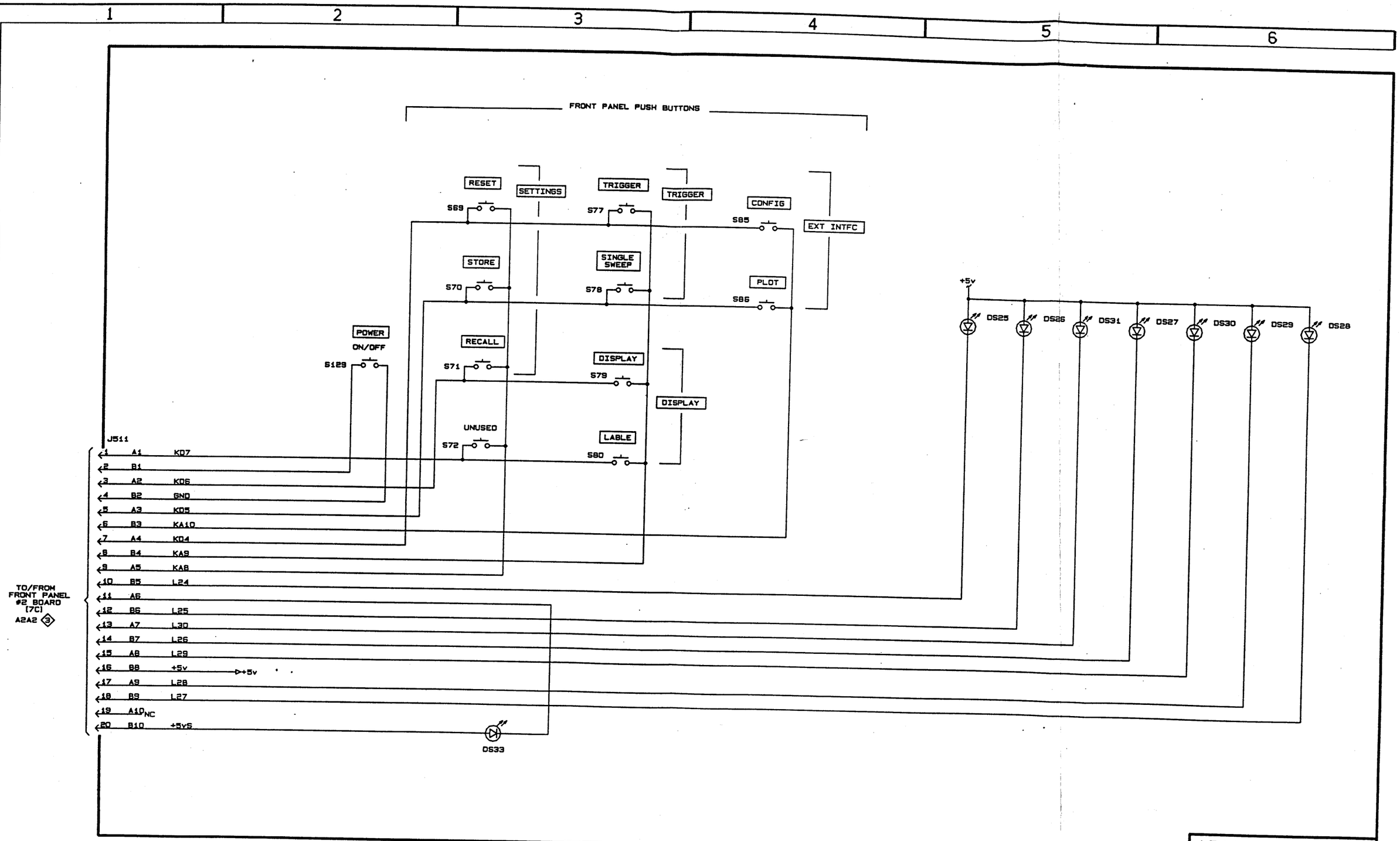

2782

H-9035-01 REV. DEC 03, 1992

FRONT PANEL #1 A2A1 1

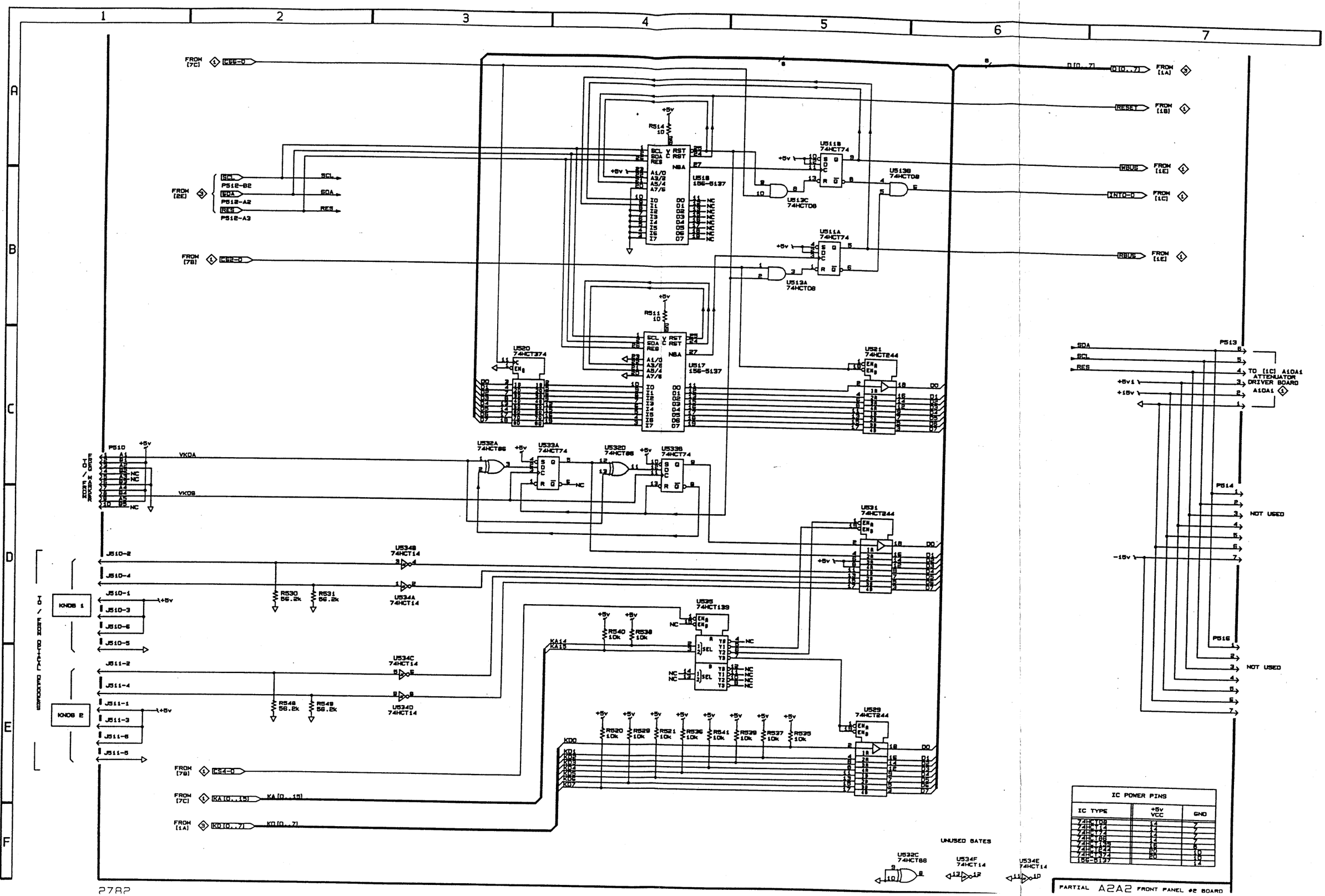

IC POWER PINS

IC TYPE	+5V VCC	GND
74HCT08	14	7
74HCT14	14	7
74HCT74	14	7
74HCT86	14	7
74HCT139	16	8
74HCT244	20	10
74HCT374	20	10
156-5137		14

PARTIAL A2A2 FRONT PANEL #2 BOARD

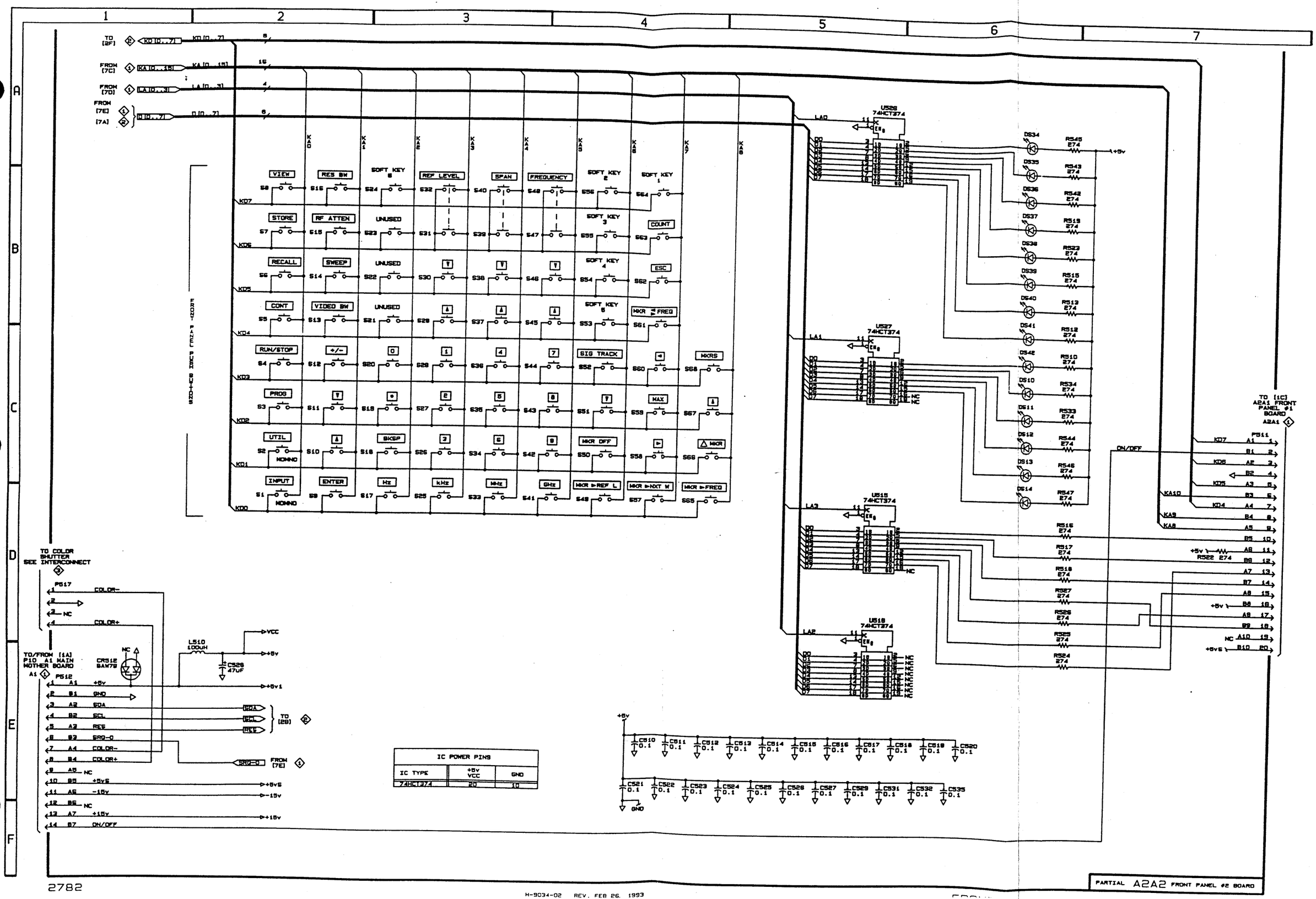
TO [2F] KD[0..7]
FROM [7C] KA[0..15]
FROM [7D] LA[0..3]
FROM [7E] [7A] D[0..7]
VIEW
RES BW
SOFT KEY 6
REF LEVEL
SPAN
FREQUENCY
SOFT KEY 2
SOFT KEY 1
STORE
RF ATTEN
UNUSED
SOFT KEY 3
COUNT
RECALL
SWEEP
UNUSED
SOFT KEY 4
ESC
CONT
VIDEO BW
UNUSED
SOFT KEY 5
MKR ◄ FREQ
RUN/STOP
+/-
SIG TRACK
MKRS
PROG
MAX
UTIL
BKSP
MKR OFF
MKR
INPUT
ENTER
Hz
kHz
MHz
GHz
MKR ►REF L
MKR ►NXT W
MKR ►FREQ
NOMNO
U526 74HCT374
U527 74HCT374
U515 74HCT374
U518 74HCT374
TO [1C] A2A1 FRONT PANEL #1 BOARD
TO COLOR SHUTTER SEE INTERCONNECT
TO/FROM [1A] P10 A1 MAIN MOTHER BOARD
CR512 BAW79
L510 100UH
C528 47UF
VCC
+5v
+5v1
SDA
SCL
RES
TO [2B]
SRQ-0
FROM [7E]
COLOR-
COLOR+
+5vS
-15v
+15v
ON/OFF
IC POWER PINS
IC TYPE | +5v VCC | GND
74HCT374 | 20 | 10
PARTIAL A2A2 FRONT PANEL #2 BOARD

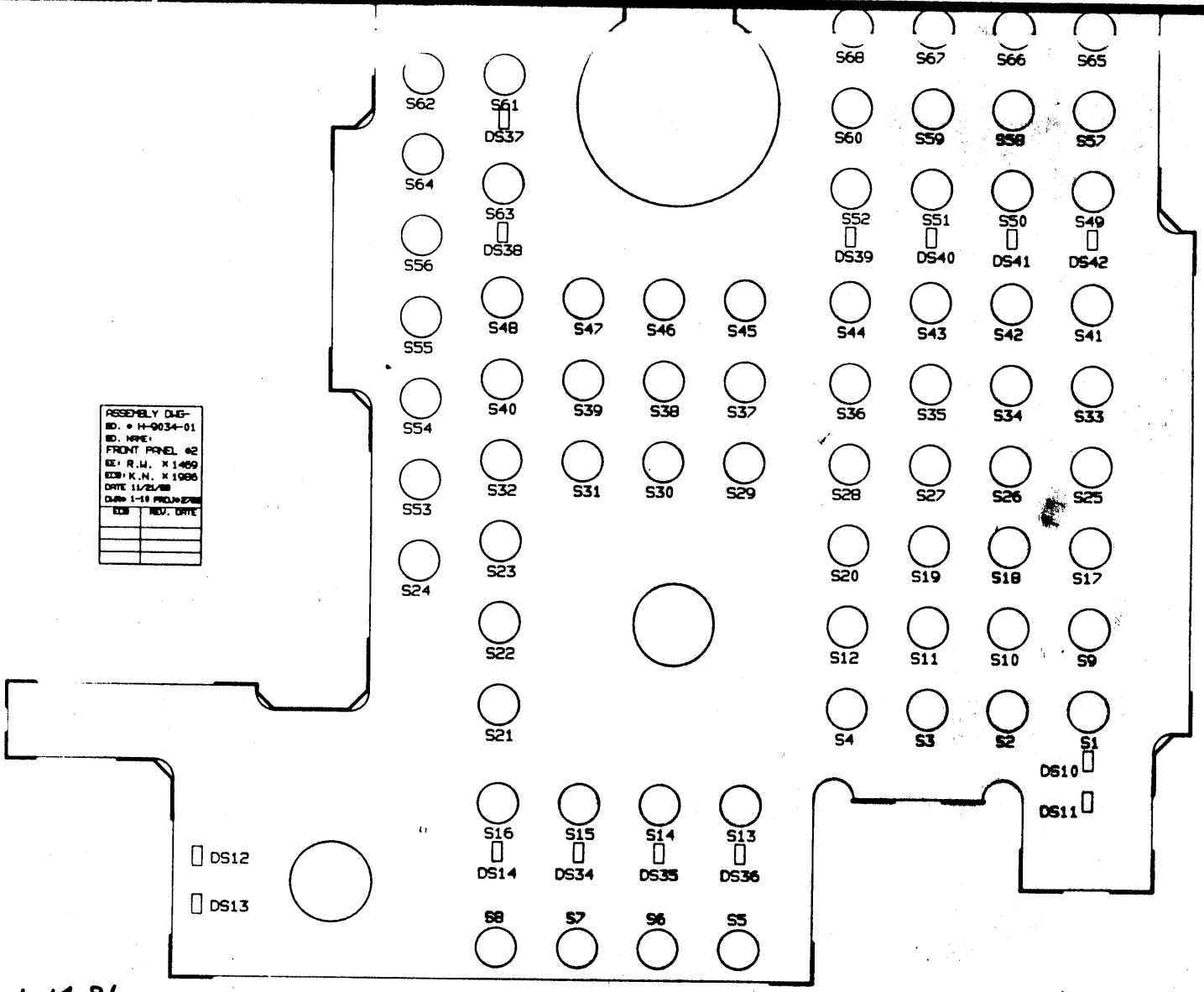

1-14-91
C. SHAW

TITLE: FRONT PANEL #2	SCALE: 1:1
BOARD NUMBER: H-9034-01	
SHEET TITLE: ASSEMBLY-FRONT	

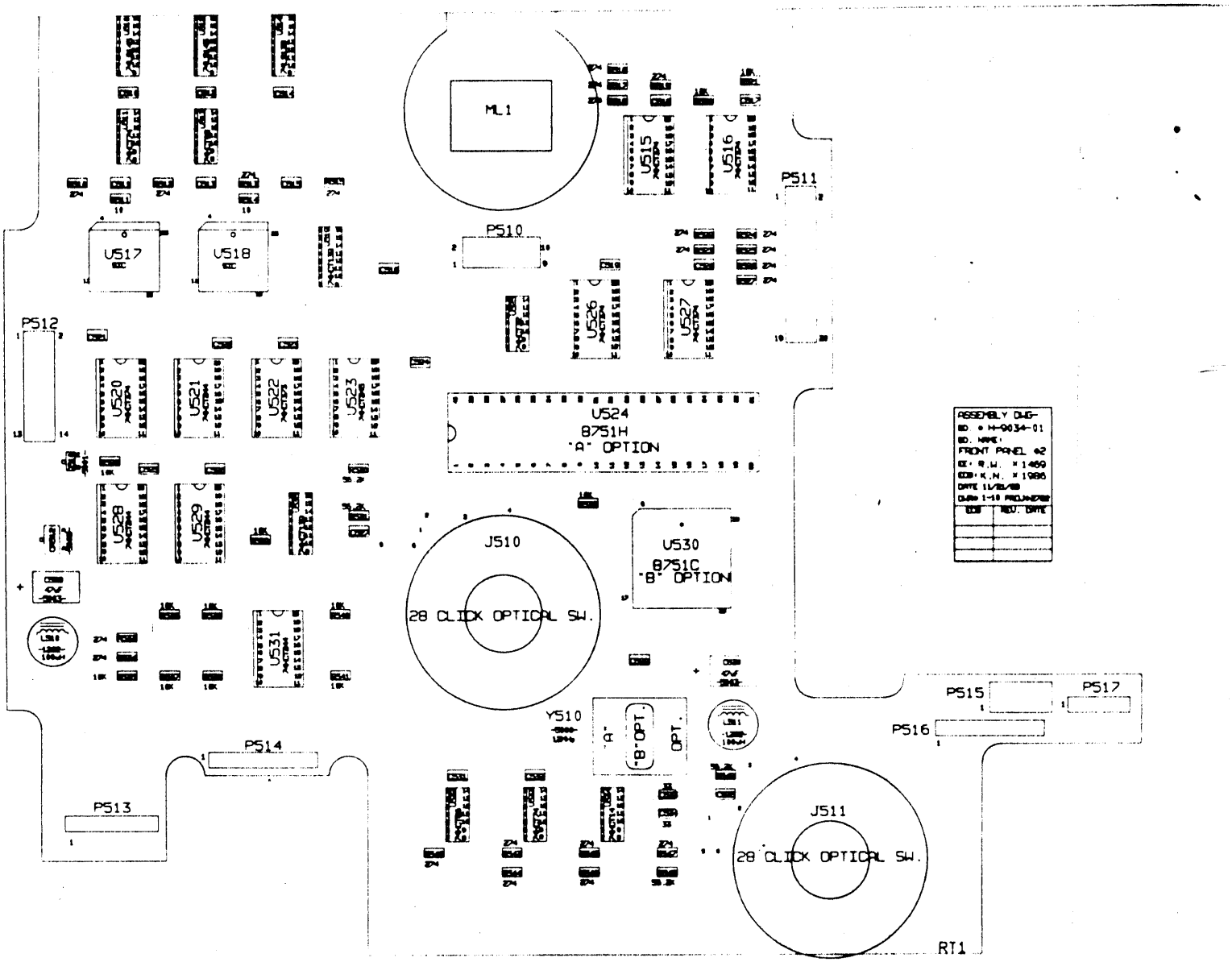

NOTES: UNLESS OTHERWISE INDICATED

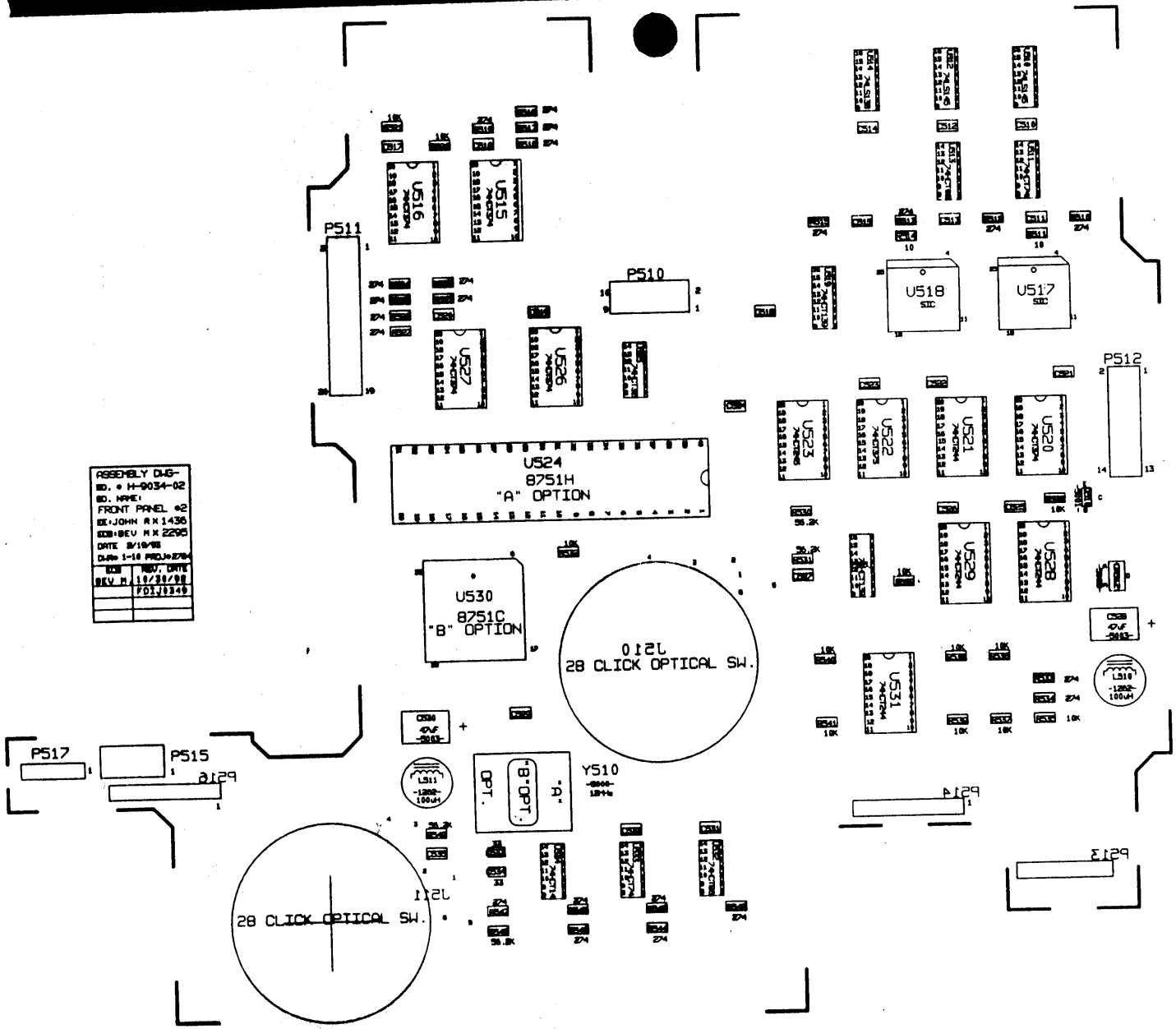

ASSEMBLY DWG-
BD. # H-9034-02
BD. NAME:
FRONT PANEL #2
DE:JOHN R X 1436
SCB:BEV H X 2295
DATE 3/19/88
DWG# 1-10 PROJ#Z7H

ECO	REV. DATE
REV H	10/30/88
	F01J0349

TITLE: FRONT PANEL #2		SCALE: 1:1	
BOARD NUMBER: H-9034-02			
SHEET TITLE: ASSEMBLY-BACK			
TEKTRONIX	DATE: 3/19/88 LAYER: DB	DOCUMENT NO.	REV
	DESIGNED BY: BEV HCC	TK21D-1	G
COMPUTER-AIDED DESIGN BY SYNERTECH, INC.			
★ BLACK STAR-POS FILM			

NOTES: UNLESS OTHERWISE INDICATED

1. ALL RESISTANCES ARE IN OHMS.
2. ALL CAPACITANCES ARE IN PICOFARADS.
3. ALL UNMARKED CAPS ARE 283-5004-00.

tem	Quantity	Reference	Part
1	22	C510,C511,C512,C513,C514, C515,C516,C517,C518,C519, C520,C521,C522,C523,C524, C525,C526,C527,C529,C531, C532,C535	0.1, 283-5004-00, C-104
2	2	C528,C530	47uF, 290-5003-00, C-476
3	2	C533,C534	33pF, 283-5011-00, SOC1206T-33.-5
4	1	CR512	BAW79, 152-5008-00, CR-BAW79
5	14	DS10,DS11,DS12,DS13,DS14, DS34,DS35,DS36,DS37,DS38, DS39,DS40,DS41,DS42	LED, 150-5000-00, SOLED,RED-10MA
6	8	J510-1,J510-2,J510-3, J510-4,J511-1,J511-2, J511-3,J511-4	SQPIN, 131-0787-00, CONN,6-PINOPTO
7	4	J510-5,J510-6,J511-5, J511-6	SQPIN, OMIT, CONN,6-PINOPTO
8	2	L510,L511	100uH, 108-1262-00, COIL,100UH
	1	P510	2X5PIN, 131-3718-00, CONN,2X5-SQ-PIN
10	1	P511	2X20PIN, 174-0911-00, CONN,2X10-SQ-PI
11	1	P512	2X7PIN, 174-0234-00, CONN,2X7-SQ-PIN
12	1	P513	6PIN, 131-0787-00, CONN,6-SQ-PIN
13	2	P514,P516	7PIN, OMIT, CONN,7-SQ-PIN
14	1	P515	8PIN, 131-1426-00, CONN,2X4-SQ-PIN
15	1	P517	4PIN, 131-1425-00, CONN,4-SQ-PIN
16	1	Q510	2N3904, 151-5001-00, SOT-23T-2N3904
17	22	R510,R512,R513,R515,R516, R517,R518,R519,R522,R523, R524,R525,R526,R527,R533, R534,R542,R543,R544,R545, R546,R547	274, 321-5011-00, SOR1206T-274.-F
18	2	R511,R514	10, 321-5000-00, R-10R0-1
19	12	R520,R521,R528,R529,R532, R535,R536,R537,R538,R539, R540,R541	10k, 321-5030-00, SOR1206T-1002-F

R 3-8-93

Item	Quantity	Reference	Part
[illegible]	4	R530,R531,R548,R549	56.2k, 321-5039-00, SOR1206T-5622-F
21	68	S1,S2,S3,S4,S5,S6,S7,S8, S9,S10,S11,S12,S13,S14, S15,S16,S17,S18,S19,S20, S21,S22,S23,S24,S25,S26, S27,S28,S29,S30,S31,S32, S33,S34,S35,S36,S37,S38, S39,S40,S41,S42,S43,S44, S45,S46,S47,S48,S49,S50, S51,S52,S53,S54,S55,S56, S57,S58,S59,S60,S61,S62, S63,S64,S65,S66,S67,S68	MOMNO, , SW,SPST-KEYPAD-R
22	2	U510,U512	74LS145, 156-5049-00, SOIC,74LS145
23	2	U511,U533	74HCT74, 156-5145-00, SOIC,74HCT74
24	1	U513	74HCT08, 156-5146-00, SOIC,74HCT08
25	1	U514	74HCT138, 156-5088-00, U-74HCT138
26	5	U515,U516,U520,U526,U527	74HCT374, 156-5143-00, SOIC,74HCT374
27	2	U517,U518	156-5137, 156-5137-00, SOIC,SIC
[illegible]	1	U519	74HCT139, 156-5142-00, SOIC,74HCT139
29	4	U521,U528,U529,U531	74HCT244, 156-5070-00, SOIC,74HCT244
30	1	U522	74HCT373, 156-5101-01, SOIC,74HCT373
31	1	U523	74HCT245, 156-5071-00, SOIC,74HCT245
32	1	U525	74HCT32, 156-5085-00, SOIC,74HCT32
33	1	U530	8751AH, 160-5621-00, SOIC,8751AH
34	1	U532	74HCT86, 156-5198-00, SOIC,74HCT86
35	1	U534	74HCT14, 156-5131-00, SOIC,74HCT14
36	1	U535	74HCT139, 156-5142-00, U-74HCT139
37	1	Y510	12MHz, 158-5000-00, SOOSC,12.00MHZ

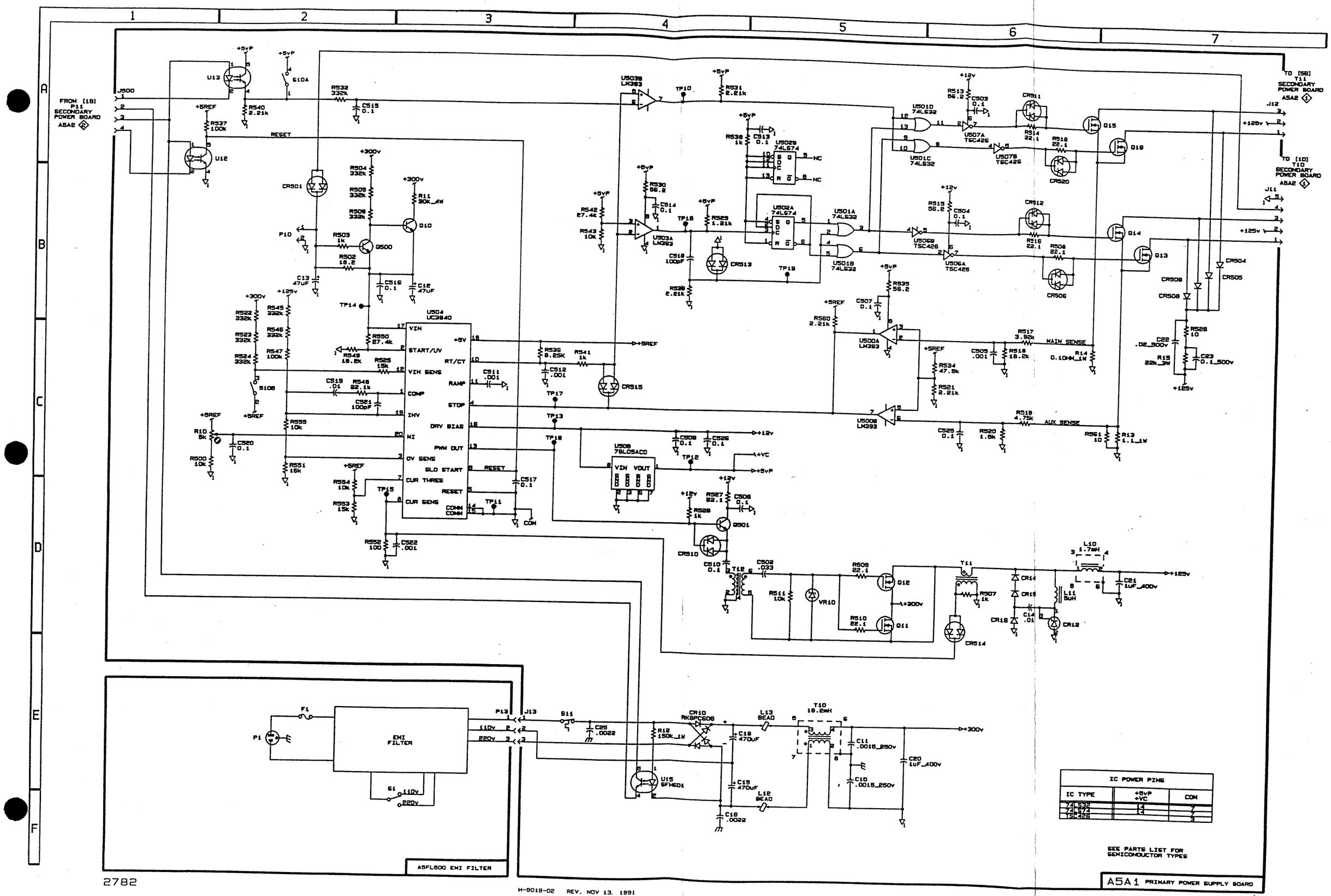

2782

H-8019-02 REV. NOV 13, 1991

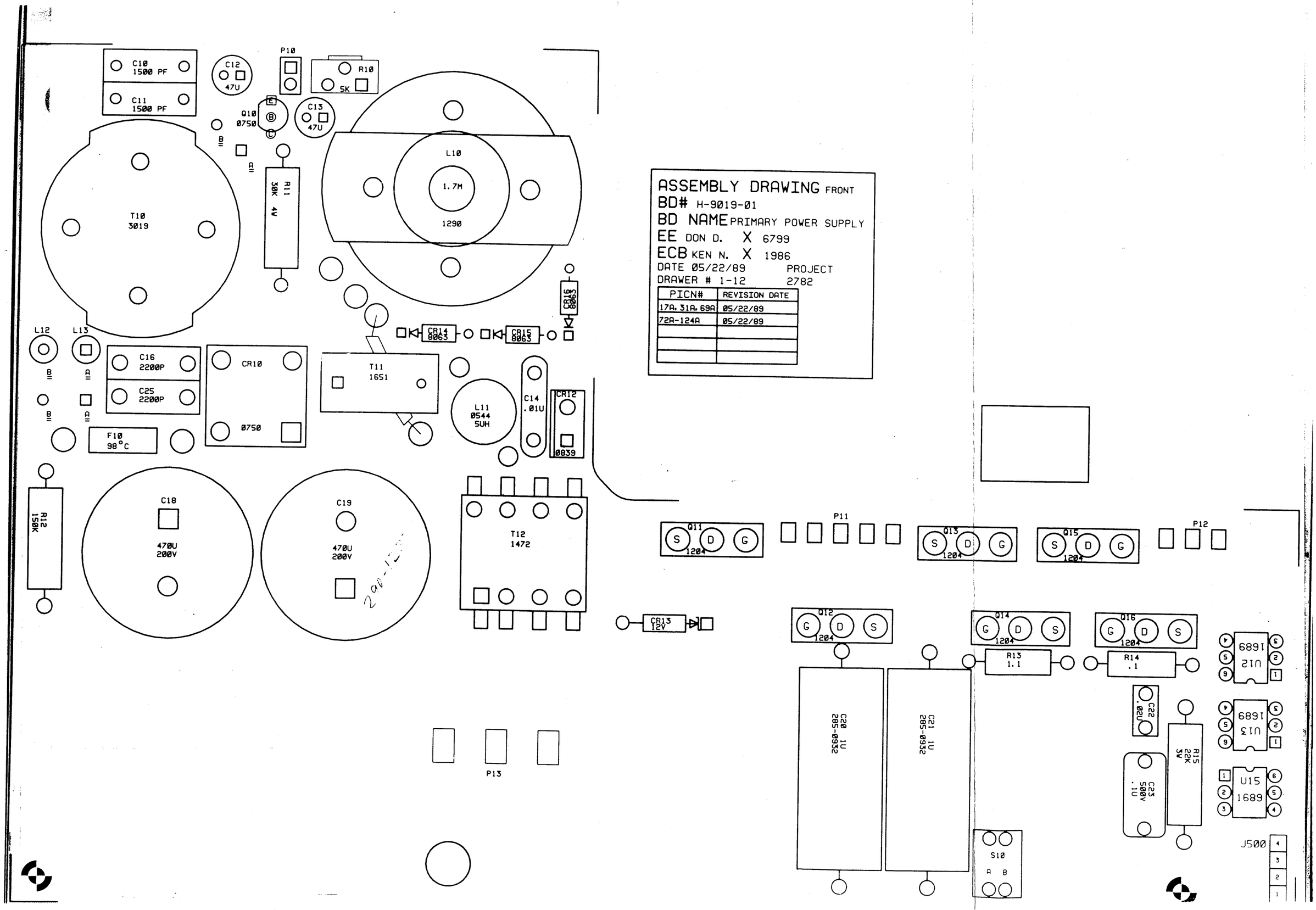

ASSEMBLY DRAWING FRONT
BD# H-9019-01
BD NAME PRIMARY POWER SUPPLY
EE DON D. X 6799
ECB KEN N. X 1986
DATE 05/22/89 PROJECT
DRAWER # 1-12 2782

PICN#	REVISION DATE
17A, 31A, 69A	05/22/89
72A-124A	05/22/89

ASSEMBLY DRAWING REAR
BD# H-8016-01
BD NAME PRIMARY POWER SUPPLY
EE DON D. X 6/29
ECB KEN N. X 1881
DATE 02\55\89 PROJECT
DRAWER # 1-15 5\85
PICN# REVISION DATE
02\55\89 REQ.2.1A.REQ.1
02\55\89 A+1-A5\

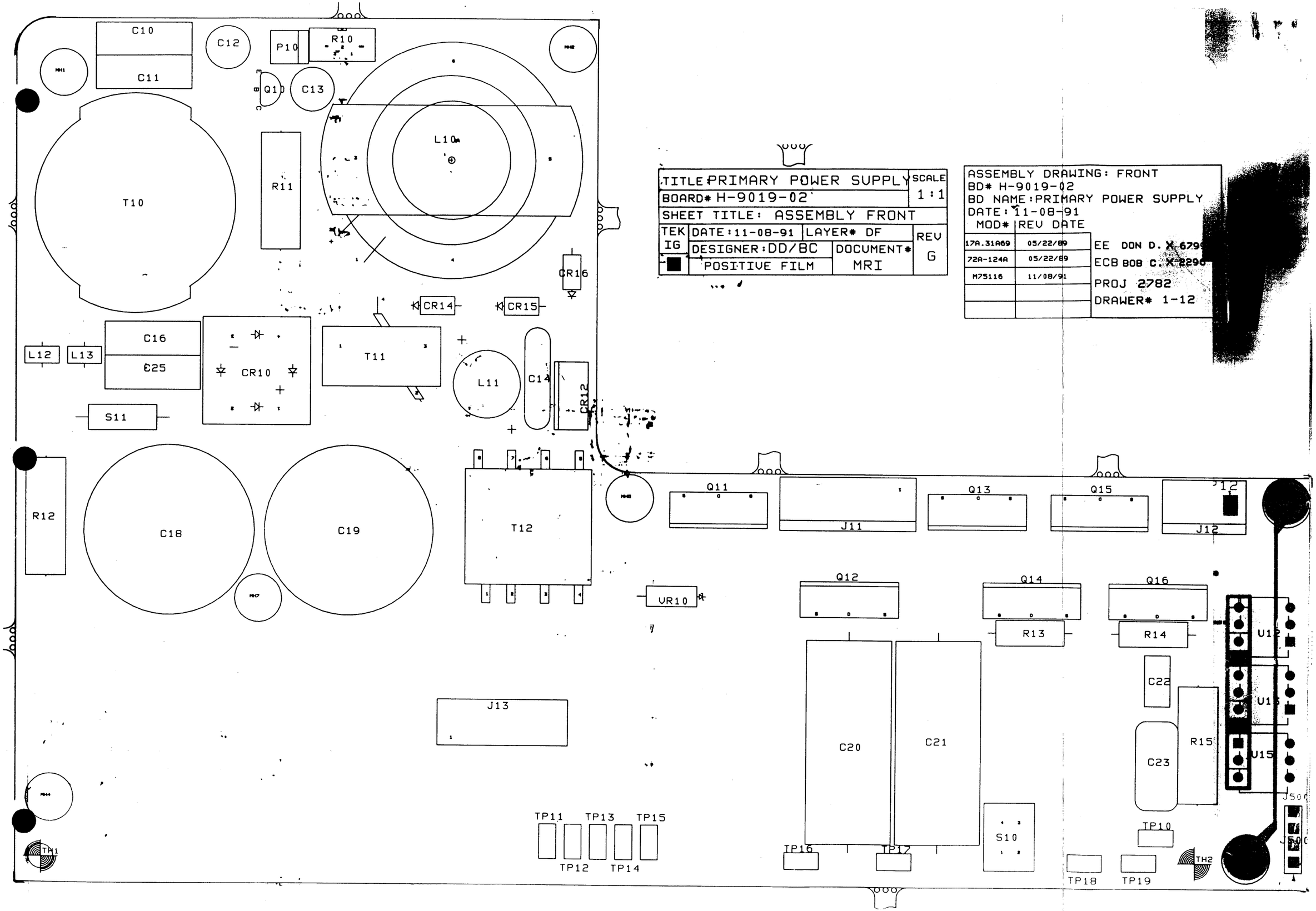
C10
C11
C12
P10
R10
Q10
C13
L10
T10
R11
CR16
CR14
CR15
C16
C25
L12
L13
CR10
T11
L11
C14
CR12
S11
R12
C18
C19
T12
Q11
J11
Q13
Q15
J12
VR10
Q12
Q14
Q16
R13
R14
U12
U13
U15
C22
C20
C21
R15
C23
J500
TP11
TP13
TP15
TP12
TP14
TP16
TP17
S10
TP10
TP18
TP19
TH1
TH2
TITLE PRIMARY POWER SUPPLY
SCALE 1:1
BOARD# H-9019-02
SHEET TITLE: ASSEMBLY FRONT
TEK IG
DATE:11-08-91
LAYER# DF
REV G
DESIGNER:DD/BC
DOCUMENT# MRI
POSITIVE FILM
ASSEMBLY DRAWING: FRONT
BD# H-9019-02
BD NAME:PRIMARY POWER SUPPLY
DATE:11-08-91
MOD# REV DATE
17A.31A69 05/22/89
72A-124A 05/22/89
M75116 11/08/91
EE DON D. X-6799
ECB BOB C. X-2296
PROJ 2782
DRAWER# 1-12

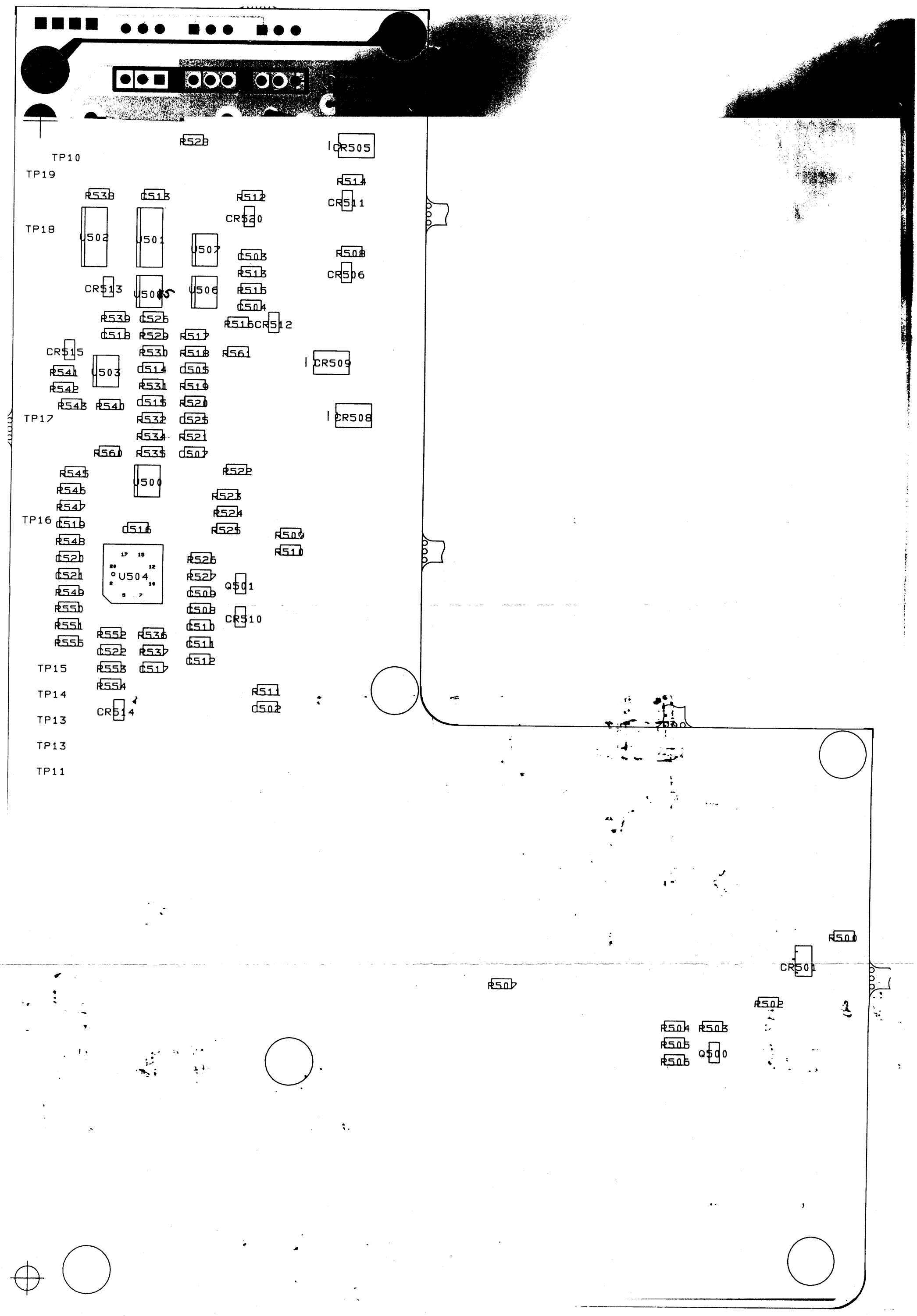
TP10
TP19
TP18
TP17
TP16
TP15
TP14
TP13
TP13
TP11
R528
CR505
R514
R538
C513
R512
CR511
CR520
U502
U501
U507
C503
R508
R513
CR506
CR513
U508
U506
R515
C504
R539
C526
R516
CR512
C518
R529
R517
CR515
R530
R518
R561
CR509
R541
U503
C514
C505
R542
R531
R519
R543
R540
C515
R520
CR508
R532
C525
R534
R521
R560
R535
C507
R545
U500
R522
R546
R523
R547
R524
C519
C516
R525
R509
R548
R510
C520
U504
R526
C521
R527
Q501
R549
C509
R550
C508
CR510
R551
C510
R552
R536
R555
C511
C522
R537
C512
R553
C517
R554
R511
CR514
C502
R507
R500
CR501
R502
R504
R503
R505
Q500
R506

ENTER DESIRED SELECTION: bmml
SET FORM TO TOP OF PAGE AND ENTER <return>

TED 22-Jun-89 07:02 AM TEKTRONIX. INC. FDI DIVISIO1

EFFECTIVITY DATE: ALL Leaded S I N G L E L E V E L B I L L S O F L

PARENT PART: 670945001 CIRCUIT BD ASSY UM:1
ERC: SRCE CODE: A TYPE: 0 ABC:0

ITEM NO	COMPONENT PART NUMBER	ERC PROD.CODE	DESCRIPTION COM.CD	S T S A P C Y P B L UM	EXTENDED QTY PER	S T
0051	108055400	C	COIL.RF			
		2J	Q4	P 1 S C F EA	1	
			5UH			
			L11			
0025	108129000		COIL.RF			
		2J	Q4	P 1 S C F EA	1	
			1.7MH			
			L10			
0063	120147200		XFMR.PWR.STPDN			
		2J	Q4	P 1 S C F EA	1	
			GATE 26:20			
			T12			
0062	120181700		XFMR.PWR.STU			
		2J		P 1 S C F EA	1	
			T11			
[illegible]	120184000		TRANSFORMER.RF			
		2J		P 0 S C F EA	1	
			18.2MH			
			T10			
0090	131263100	A	CONN.RCPT.ELEC			
		2J	B6	P 1 S C F EA	1	
			ON BACK OF BRD.J500			
0302	131322700		CONN.RCPT.ELEC			
		2J		P 1 S C F EA	1	
			MOLX 3M			
			P13			
0100	131327000		CONN.RCPT.ELEC			
		2E	B6	P 1 S C F EA	1	
			P10			
0300	131432600		TERM SET.PIN			
		2J		P 1 S C F EA	1	
			5-PIN			
			P11			
0071	131457500		TERM SET PIN			
		2J		P 0 S C F EA	1	
			3-PIN			
			P12			
0017	136038800	A	SOCKET.PIN TERM			
		2F	H5	P 1 S C F EA	2	
			USE W/ F10			
0067	151075000	B	TRANSISTOR			
		2J	3P	P 1 S C F EA	1	
			MPSA42			
			Q10			
0083	151120400	*	TRANSISTOR			
		2J	3T	P 1 S B F EA	6	
			IRFP440			
			Q11.12.13.14.15.16			

EFFECTIVITY DATE: ALL

S I N G L E L E V E L B I L L S O F L

PARENT PART: 670945001

CIRCUIT BD ASSY UM:1
ERC: SRCE CODE: A TYPE: 0 ABC:0

ITEM NO	COMPONENT PART NUMBER	ERC PROD.CODE	DESCRIPTION COM.CD	S T S A P C Y P B L UM	EXTENDED QTY	S PER T
0024	152016800	A 2F	SEMICOND DVC.DI 4E 12V-IN369B VR10	P 1 S C F EA	1	
0009	152075000	B 2J	SEMICOND DVC.DI 4H 3A. 600V CR10	P 1 S C F EA	1	
0006	152~~083~~00 ~~1161~~ 152-1161-00	C 2H	SEMICOND DVC.DI 4F 8A.600V CR12	P 1 S C F EA	1	
0073	152086300	B 2J	SEMICOND DVC.DI 4F CR14.15.16	P 1 S C F EA	3	
[illegible]	156168900	C 2E	CPLR.OPTOELECTR M7 OPTO COUP U12.13.15	P 1 S C F EA	3	
0060	159032100	2J	FUSE.TERMINAL 98C F10	P 0 S D F EA	1	
0010	211041000	A 2F	SCR.ASSEM WSHR USE W/HEAT SINK	X 1 C P EA	6	
0031	214383900	A 2J	HEAT SINK.ELEC	P 0 S C F EA	1	
0084	260243100	2J	SWITCH.ROCKER 2 (POS) SW10	P 0 S C F EA	1	
0013	276082800	2J	EMI SUPPRESSOR FERRITE L12.13	P 9 S D F EA	2	
0004	283000800	K 2E	CAP.FXD.CER DI 44 0.1UF.500V C23	P 1 S C F EA	1	
0018	283006800	F 2E	CAP.FXD.CER DI 45 .01U C14	P 1 S C F EA	1	
0102	283041400	2J	CAP.FXD.CER DI 44 .02 500V C22	P 1 S C F EA	1	

EFFECTIVITY DATE: ALL

S I N G L E L E V E L B I L L S O F L

PARENT PART: 670945001

CIRCUIT BD ASSY UM:1
ERC: SRCE CODE: A TYPE: 0 ABC:0

ITEM NO	COMPONENT PART NUMBER	ERC PROD.CODE	DESCRIPTION COM.CD	S T S A P C Y P B L	UM	EXTENDED QTY	S PER T
0101	285093200	C 2F	CAP.FXD.PLASTIC 97 C20.21.1U	P 1 S C F	EA	2	
0080	285119200	D 2F	CAP.FXD.PPR DI 97 2200 PF C16.25	P 1 S C F	EA	2	
0303	285138100	2J	CAP.FXD.MTLZD 97 1500PF 250V C11.10	P 1 S C F	EA	2	
0027	290094301	B 2J	CAP.FXD.ELCTLT 58 47UF 25V C12.13	P 1 S C F	EA	2	
0304	290123300	2J	CAP.FXD.ELCTLT 470 UF.200V.105'C C18.19	P 9 S C F	EA	2	
0012	303082300	L 2J	RES.FXD.CMPSN 21 82K 1W R12	P 1 S C F	EA	1	
0035	308042900	C 2J	RES.FXD.WW 42 22K 3W R15	P 1 S C F	EA	1	
0104	308043200	C 2J	RES.FXD.WW 35 30K 4W R11	P 1 S C F	EA	1	
0103	308076700	C 2J	RES.FXD.WW 35 1.1 R13	P 1 S C F	EA	1	
0011	308083900	* 2J	RES.FXD.WW 0.1 OHM 1W R14	P 1 S C F	EA	1	
0039	311123800	C 2E	RES.VAR.NONWW 86 5K R10	P 1 S C F	EA	1	
0046	321035400	R 2E	RES.FXD.FILM 15 47.5K R534 (FROM R521 TO R560 +5 REF)	P 1 S C F	EA	1	

EFFECTIVITY DATE: ALL

S I N G L E L E V E L B I L L S O F L

PARENT PART: 670945001

CIRCUIT BD ASSY UM:1
ERC: SRCE CODE: A TYPE: 0 ABC:0

ITEM NO	COMPONENT PART NUMBER	ERC PROD.CODE	DESCRIPTION COM.CD	S T S A P C Y P B L UM	EXTENDED QTY	S PER T
0064	334236300		MARKER.IDENT			
		2J		P 1 S C F EA	1	
			ON OUTSIDE L10			
0701	342086900		INSULATOR.ELEC			
		2J		P 9 S C F EA	6	
			Q11.12.13.14.15.16.			
0005	361111000	C	SPACER.SLEEVE			
		2J		P 1 S C F EA	7	
			MOUNT ON BACK			
0029	673945001		CKT BD SUBASSY			
		2J		A 0 D P EA	1	

NOTES:

PRINTED 22-Jun-89 07:04 AM SMT TEKTRONIX. INC. FDI DIVISIO1

EFFECTIVITY DATE: ALL S I N G L E L E V E L B I L L S O F L

PARENT PART: 673945001 CKT BD SUBASSY UM:1

ERC: SRCE CODE: A TYPE: 0 ABC:0

ITEM NO	COMPONENT PART NUMBER	ERC PROD.CODE	DESCRIPTION COM.CD	S T S A P C Y P B L	UM	EXTENDED QTY	S PER T
0036	151500100	B	TRANSISTOR				
		2E	3P	P 1 S B F	EA	2	
			3904				
			Q500.501				
0041	152500000	A	SEMICOND DVC.DI				
		2E	K4	P 1 S B F	EA	8	
			BAV70				
			CR506.509				
			CR510.511.512.513				
			CR514.515				
0096	152500800	*	SEMICOND DVC.DI				
		2E	4F	P 1 S B F	EA	1	
			CR501				
0012	152502000		SEMICOND DVC.DI				
		2J		P 1 S C F	EA	4	
			1A 400V				
			CR504.505.508.509				
0053	156500300	B	MICROCKT.DGTL				
		2E	1A	P 1 S C F	EA	1	
			74LS74				
			U502				
0054	156501400	A	MICROCKT.DGTL				
		2E	1A	P 1 S C F	EA	1	
			74LS32				
			U501				
0052	156501900	A	MICROCKT.LINEAR				
		2E	50	P 1 S C F	EA	2	
			LM393				
			U500.503				
0321	156529800	A	MICROCKT.LINEAR				
		2E	5K	P 1 S C F	EA	1	
			5298				
			U505				
0038	156565700		MICROCKT.LINEAR				
		2J		P 1 S C F	EA	1	
			UC3840				
			U504				
0320	156588300	*	MICROCKT.DGTL				
		2J		P 0 S C F	EA	2	
			TSC426				
			SOT-8				
			U506.507				
[illegible]0	283500100	*	CAP.FXD.CER DI				
		2E	50	P 1 S B F	EA	2	
			100PF				
			C518.521				

SM

EFFECTIVITY DATE: ALL

S I N G L E L E V E L B I L L S O F L

PARENT PART: 673945001

CKT BD SUBASSY UM:1
ERC: SRCE CODE: A TYPE: 0 ABC:0

ITEM NO	COMPONENT PART NUMBER	ERC PROD.CODE	DESCRIPTION COM.CD	S T S A P C Y P B L UM	EXTENDED QTY PER	S T
0040	283500200	*	CAP.FXD.CER DI			
		2E	50	P 1 S C F EA	4	
			.001UF			
			C505.511.512			
			C522			
0090	283500300	*	CAP.FXD.CER DI			
		2E	50	P 1 S B F EA	1	
			.01UF			
			C519			
0026	283500400	*	CAP.FXD.CER DI			
		2E	50	P 1 S A F EA	14	
			0.1UF			
			C503.504.507.508			
			C509.510.513.514			
			C515.516.517			
			C520.525.526			
07	283501800		CAP.FXD.CER DI			
		2E	50	P 1 S C F EA	1	
			.033UF			
			C502			
0013	321500000	C	RES.FXD.FILM			
		2E	26	P 1 S C F EA	2	
			10 OHM			
			R528.561			
0035	321500300	C	RES.FXD.FILM			
		2E	26	P 1 S C F EA	1	
			18.2 OHM			
			R502			
0014	321500400	B	RES.FXD.FILM			
		2E	26	P 1 S C F EA	7	
			22.1 OHM			
			R508.509.510			
			R512.514.516.527			
0045	321500600	B	RES.FXD.FILM			
		2E	26	P 1 S C F EA	1	
			100 OHM			
			R552			
0055	321501800	A	RES.FXD.FILM			
		2E	26	P 1 S B F EA	5	
			1.00K			
			R503.507.526.538			
			R541			
32	321501900	A	RES.FXD.FILM			
		2E	26	P 1 S C F EA	1	
			1.21K			
			R529			

PRINTED 22-Jun-89 07:05 AM TEKTRONIX. INC. FDI DIVISIO3

EFFECTIVITY DATE: ALL S I N G L E L E V E L B I L L S O F L

PARENT PART: 673945001 CKT BD SUBASSY UM:1

ERC: SRCE CODE: A TYPE: 0 ABC:0

ITEM NO	COMPONENT PART NUMBER	ERC PROD.CODE	DESCRIPTION COM.CD	S T S A P C Y P B L UM	EXTENDED QTY PER	S T
0093	321502000	A 2E	RES.FXD.FILM 26 1.50K R520	P 1 S C F EA	1	
0056	321502200	A 2E	RES.FXD.FILM 26 2.21K R521.531 R539.540.560	P 1 S C F EA	5	
0076	321502500	A 2E	RES.FXD.FILM 26 3.92K R517	P 1 S C F EA	1	
0058	321502600	A 2E	RES.FXD.FILM 26 4.75K R519	P 1 S C F EA	1	
[illegible]	321502900	A 2E	RES.FXD.FILM 26 8.25K R536	P 1 S C F EA	1	
0015	321503000	A 2E	RES.FXD.FILM 26 10.0K R500.511.543,554,555	P 1 S B F EA	5	
0048	321503200	A 2E	RES.FXD.FILM 26 15K R525.551.553	P 1 S C F EA	3	
0043	321503300	A 2E	RES.FXD.FILM 26 18.2K R518.549	P 1 S C F EA	2	
0095	321503400	A 2E	RES.FXD.FILM 26 22.1K R548	P 1 S C F EA	1	
0042	321503500	A 2E	RES.FXD.FILM 26 27.4K R542.550	P 1 S C F EA	2	
[illegible]	321504400	A 2E	RES.FXD.FILM 26 56.2 OHM R513.515,530,535	P 1 S C F EA	4	
0057	321504700	A 2E	RES.FXD.FILM 26 100.0K R537.547	P 1 S C F EA	2	

PRINTED 22-Jun-89 07:05 AM TEKTRONIX. INC. FDI DIVISI04

EFFECTIVITY DATE: ALL

S I N G L E L E V E L B I L L S O F L

PARENT PART: 673945001

CKT BD SUBASSY UM:1

ERC: SRCE CODE: A TYPE: 0 ABC:0

ITEM NO	COMPONENT PART NUMBER	ERC PROD.CODE	DESCRIPTION COM.CD	S T S A P C Y P B L UM	EXTENDED QTY	S PER T
0044	321504800	A	RES.FXD.FILM			
		2E	26	P 1 S C F EA	9	
			332K			
			R504.505,506,522			
			R523,524,532.545			
			R546			
0061	388901900		CIRCUIT BOARD			
		2J		P 9 D P EA	1	

NOTES:

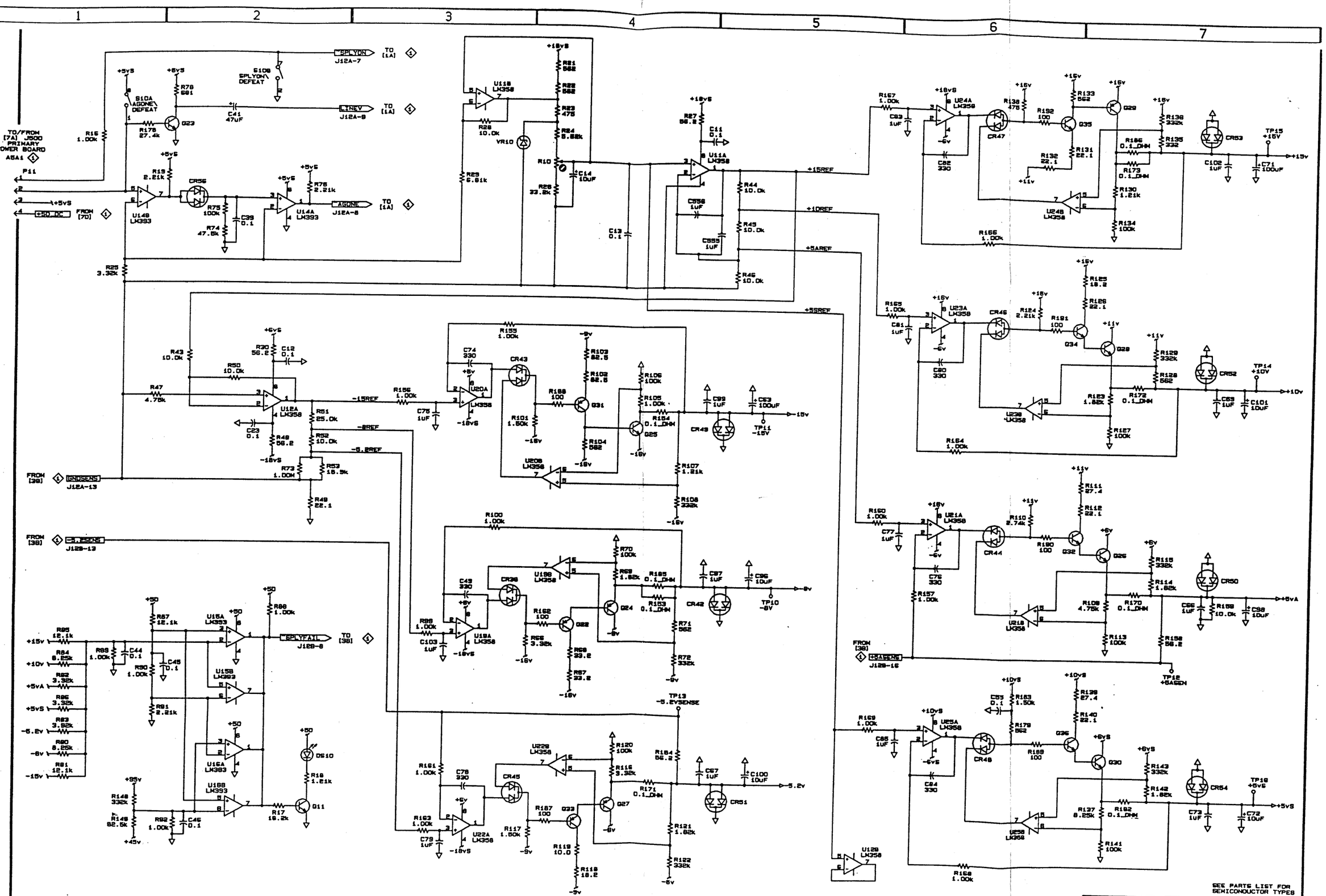

2782

H-9020-02 REV. AUGUST 12, 1991

SECONDARY POWER SUPPLY REGULATORS A5A2 <2>

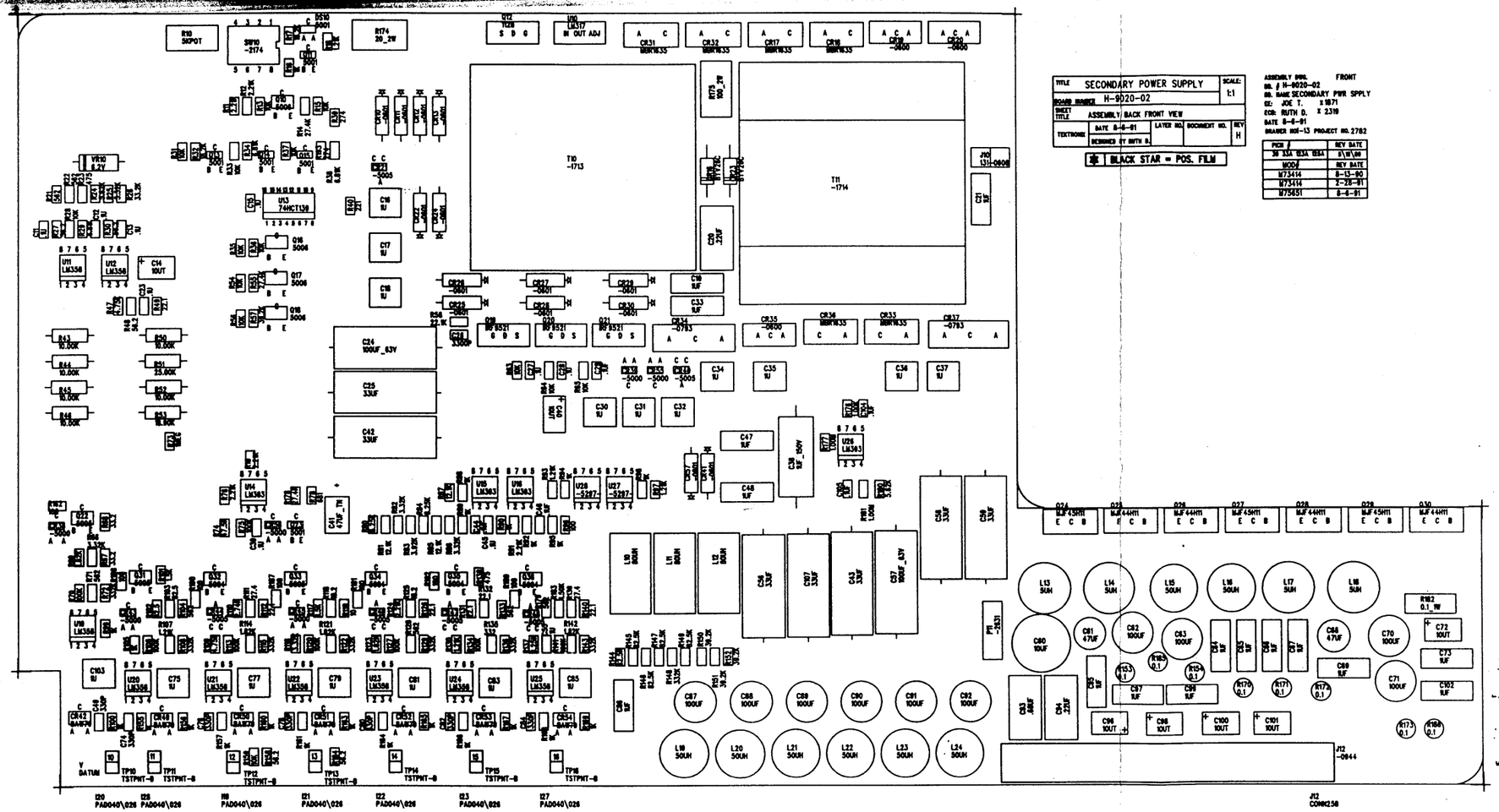

TITLE	SECONDARY POWER SUPPLY		SCALE: 1:1
BOARD NAME	H-9020-02		
SHEET TITLE	ASSEMBLY BACK FRONT VIEW		
TEKTRONIX	DATE 8-6-91	LAYER NO. / DOCUMENT NO.	REV H
	DESIGNED BY RUTH D.		

BLACK STAR = POS. FILM

ASSEMBLY DWG. FRONT
DB. # H-9020-02
DB. NAME SECONDARY PWR SPPLY
DS: JOE T. X 1871
ECO: RUTH D. X 2319
DATE 8-6-91
DRAWER NO1-13 PROJECT NO. 2782

PCB #	REV DATE
36 33A 33A 33A	8\W\90
MOD#	REV DATE
M73414	8-13-90
M73414	2-28-91
M75451	8-6-91

C556
W
C556
W

BLACK STAR = PCB. FILM
SECONDARY POWER SUPPLY
H-8020-02
SECONDARY BACK VIEW
1:1
H
8-6-01
ASSEMBLY DWG.
H-8020-02
SEC. BASE SECONDARY PWR SUPPLY
J. JOE T.
D. SMITH
8-6-01
PROJECT 0A2762
REV
DATE
REV
DATE
REV
DATE
REV
DATE
REV
DATE
REV
DATE

SMD

PRINTED 02-Jan-90 12:25 PM TEKTRONIX, INC. MRI DIVISIO1

EFFECTIVITY DATE: ALL S I N G L E L E V E L B I L L S O F L

PARENT PART: 673945102 CKT,BD SUBASSY UM:1

ERC: SRCE CODE: A TYPE: 0 ABC:0

ITEM NO	COMPONENT PART NUMBER	ERC PROD.CODE	DESCRIPTION COM.CD	S C	T Y	S P	A B	P L	UM	EXTENDED QTY	S PER T
0111	150500100	*	LT EMITTING DIO								
		2E	4Z	P	1	S	C	F	EA	1	
			GREEN								
			DS10								
0031	151500100	B	TRANSISTOR								
		2E	3P	P	1	S	B	F	EA	5	
			3904								
			Q11,13,14,15,23								
0029	151500400	*	TRANSISTOR								
		2E	3P	P	1	S	B	F	EA	4	
			BCX68								
			Q32,34,35,36								
0030	151500500	B	TRANSISTOR								
		2E	3P	P	1	S	B	F	EA	3	
			BCX69								
			Q22,31,33								
[illegible]	151500600	*	TRANSISTOR								
		2E	3P	P	1	S	B	F	EA	4	
			MXTA42								
			Q10,16,17,18								
0070	152500000	A	SEMICOND DVC,DI								
		2E	K4	P	1	S	B	F	EA	6	
			BAV70								
			CR38,39,43,45								
			55,56								
0025	152500500	B	SEMICOND DVC,DI								
		2E	K4	P	1	S	C	F	EA	6	
			BAW56								
			CR21,40,44,46,47,48								
0007	152500800	*	SEMICOND DVC,DI								
		2E	4F	P	1	S	B	F	EA	9	
			BAW79D								
			CR42,49,50,51,52,53								
			CR54,500,501								
0093	156501800	A	MICROCKT,LINEAR								
		2E	5J	P	1	S	B	F	EA	9	
			LM358								
			U11,12,19,20,21								
			U22,23,24,25								
0027	156501900	A	MICROCKT,LINEAR								
		2E	50	P	1	S	C	F	EA	4	
			LM393								
			U14,15,16,26								
[illegible] 28	156514200	A	MICROCKT,DGTL								
		2E	1R	P	1	S	C	F	EA	1	
			74HCT139								
			U13								

PRINTED 02-Jan-90 12:26 PM TEKTRONIX, INC. MRI DIVISIO2

EFFECTIVITY DATE: ALL S I N G L E L E V E L B I L L S O F L

PARENT PART: 673945102 CKT.BD SUBASSY UM:1

ERC: SRCE CODE: A TYPE: 0 ABC:0

ITEM NO	COMPONENT PART NUMBER	ERC PROD.CODE	DESCRIPTION COM.CD	S C	T Y	S P	A B	P L	UM	EXTENDED QTY	S PER T
0133	156529700	*	MICROCKT,DGTL								
		2E	1F	P	1	S	C	F	EA	2	
			TL431CD								
			U27,28								
0099	283500200	*	CAP,FXD,CER DI								
		2E	50	P	1	S	C	F	EA	4	
			1000PF								
			C504,507,510,512								
0006	283500400	*	CAP,FXD,CER DI								
		2E	50	P	1	S	A	F	EA	38	
			0.1UF								
			C11,12,13,15,23,27								
			C28,29,39,44,45,46								
			C55,104,105,518,525								
			C526,527,528,529,530								
			C531,532,533,534,535								
			C536,537,538,541,542								
			C543,544,545,546,547								
			C548,549								
0073	283501400		CAP,FXD,CER DI								
		2E	50	P	1	S	C	F	EA	7	
			330PF								
			C49,74,76,78,80								
			C82,84								
0026	283501500		CAP,FXD,CER DI								
		2E	50	P	1	S	C	F	EA	4	
			3300PF								
			C26,508,515,521								
0101	283501600	B	CAP,VAR,CER DI								
		2E	50	P	1	S	B	F	EA	22	
			1UF								
			C16,17,18,30,31,32								
			C34,35,36,37,75,77								
			C79,81,83,85,103,501								
			C502,503,539,540								
0100	283507000		CAP,FXD,CER DI								
		2J	50	P	1	S	C	F	EA	2	
			.01UF								
			C523,524								
0084	283511200		CAP,FXD,CER DI								
		2J		P	0	S	C	F	EA	3	
			.33UF								
			C505,506,509								
[illegible]0	283524500		330PF,500V,1808 PACK								
		2J		P	1	S	C	F	EA	1	
			330PF 500V								
			C500								

PRINTED 02-Jan-90 12:26 PM TEKTRONIX, INC. MRI DIVISIO3

ACTIVITY DATE: ALL

S I N G L E L E V E L B I L L S O F L

PARENT PART: 673945102

CKT,BD SUBASSY UM:1
ERC: SRCE CODE: A TYPE: 0 ABC:0

ITEM NO	COMPONENT PART NUMBER	ERC PROD.CODE	DESCRIPTION COM.CD	S T S A P C Y P B L UM	EXTENDED QTY PER	S T
0112	290500200		CAP,FXD,ELCTLT			
		2E	57	P 1 S A F EA	6	
			10UF TANT			
			C14,72,96,98			
			C100,101			
0002	290500300	C	CAP,FXD,ELCTLT			
		2E	92	P 1 S B F EA	1	
			47UF 10V			
			C41			
0131	308500200		RES,FXD,CMPSN			
		2J		P 1 S C F EA	1	
			20 2W			
			R174			
0132	308500300		RES,FXD,CMPSN			
		2J		P 1 S C F EA	1	
			100 2W			
			R175			
00[illegible]	321500000	C	RES,FXD,FILM			
		2E	26	P 1 S C F EA	1	
			10 OHM			
			R119			
0033	321500300	C	RES,FXD,FILM			
		2E	26	P 1 S C F EA	2	
			18.2 OHM			
			R118,125			
0034	321500400	B	RES,FXD,FILM			
		2E	26	P 1 S C F EA	6	
			22.1 OHM			
			R49,112,126,131,132			
			R140			
0035	321500500	B	RES,FXD,FILM			
		2E	26	P 1 S C F EA	2	
			27.4 OHM			
			R111,139			
0038	321500600	B	RES,FXD,FILM			
		2E	26	P 1 S C F EA	1	
			100 OHM			
			R96			
0039	321501000	B	RES,FXD,FILM			
		2E	26	P 1 S C F EA	1	
			221 OHM			
			R40			
0113	321501100	B	RES,FXD,FILM			
		2E	26	P 1 S C F EA	1	
			274 OHM			
			R39			

PRINTED 02-Jan-90 12:27 PM TEKTRONIX, INC. MRI DIVISI04

T CTIVITY DATE: ALL S I N G L E L E V E L B I L L S O F L

PARENT PART: 673945102 CKT,BD SUBASSY UM:1
ERC: SRCE CODE: A TYPE: 0 ABC:0

ITEM NO	COMPONENT PART NUMBER	ERC PROD.CODE	DESCRIPTION COM.CD	S T S A P C Y P B L UM	EXTENDED QTY PER	S T
0201	321501200	B 2E	RES,FXD,FILM 26 332 OHM R135	P 1 S C F EA	1	
0041	321501400	B 2E	RES,FXD,FILM 26 475 OHM R23,138	P 1 S C F EA	2	
0042	321501500	B 2E	RES,FXD,FILM 26 562 OHM R21,22,71,104,128 R133,179	P 1 S C F EA	7	
0081	321501600	A 2E	RES,FXD,FILM 26 681 OHM R78	P 1 S C F EA	1	
0[illegible]	321501800	A 2E	RES,FXD,FILM 26 1K R16,88,89,90,92 R94,95,98,105,176	P 1 S B F EA	10	
0109	321501900	A 2E	RES,FXD,FILM 26 1.21K R18,93,97,107,130	P 1 S C F EA	5	
0046	321502000	A 2E	RES,FXD,FILM 26 1.50K R101,117,183	P 1 S C F EA	3	
0047	321502100	A 2E	RES,FXD,FILM 26 1.82K R69,114,121,123,142	P 1 S C F EA	5	
0048	321502200	A 2E	RES,FXD,FILM 26 2.21K R19,76,91,124	P 1 S C F EA	4	
0049	321502300	A 2E	RES,FXD,FILM 26 2.74K R110	P 1 S C F EA	1	
0050	321502400	A 2E	RES,FXD,FILM 26 3.32K R25,66,82,86,116	P 1 S C F EA	5	

PRINTED 02-Jan-90 12:28 PM TEKTRONIX, INC. MRI DIVISIO5

EFFECTIVITY DATE: ALL S I N G L E L E V E L B I L L S O F L

PARENT PART: 673945102 CKT,BD SUBASSY UM:1

ERC: SRCE CODE: A TYPE: 0 ABC:0

ITEM NO	COMPONENT PART NUMBER	ERC PROD.CODE	DESCRIPTION COM.CD	S C	T Y	S P	A B	P L	UM	EXTENDED QTY	S PER T
0051	321502500	A 2E	RES,FXD,FILM 26 3.92K R83	P	1	S	C	F	EA	1	
0052	321502600	A 2E	RES,FXD,FILM 26 4.75K R47,109	P	1	S	C	F	EA	2	
0053	321502700	A 2E	RES,FXD,FILM 26 5.62K R24,180	P	1	S	C	F	EA	2	
0054	321502800	A 2E	RES,FXD,FILM 26 6.81K R29,34,38	P	1	S	C	F	EA	3	
0055	321502900	A 2E	RES,FXD,FILM 26 8.25K R80,84,137	P	1	S	C	F	EA	3	
0055	321503000	A 2E	RES,FXD,FILM 26 10K R11,12,13,15,28,31 R33,35,36,37,54,56 R63,64,65,99,100 R155,156,157,159,160 R161,163,164,165,166 R167,168,169	P	1	S	B	F	EA	30	
0056	321503100	A 2E	RES,FXD,FILM 26 12.1K R81,85,87	P	1	S	C	F	EA	3	
0114	321503300	A 2E	RES,FXD,FILM 26 18.2K R17,32	P	1	S	C	F	EA	2	
0074	321503400	A 2E	RES,FXD,FILM 26 22.1K R58	P	1	S	C	F	EA	1	
0060	321503500	A 2E	RES,FXD,FILM 26 27.4K R14,55,178	P	1	S	C	F	EA	3	
0115	321503600	A 2E	RES,FXD,FILM 26 33.2K R26	P	1	S	C	F	EA	1	

PRINTED 02-Jan-90 12:28 PM TEKTRONIX, INC. MRI DIVISIO6

EFFECTIVITY DATE: ALL S I N G L E L E V E L B I L L S O F L

PARENT PART: 673945102 CKT,BD SUBASSY UM:1
ERC: SRCE CODE: A TYPE: 0 ABC:0

ITEM NO	COMPONENT PART NUMBER	ERC PROD.CODE	DESCRIPTION COM.CD	S T S A P C Y P B L UM	EXTENDED QTY	S PER T
0062	321503700	A 2E	RES,FXD,FILM 26 39.2K R57,150,151,152	P 1 S C F EA	4	
0082	321503800	A 2E	RES,FXD,FILM 26 47.5K R74	P 1 S C F EA	1	
0103	321504100	A 2E	RES,FXD,FILM 26 82.5K R144,145,146,147,149	P 1 S C F EA	5	
0130	321504200	A 2E	RES,FXD,FILM 26 39.2 R500,501,502,503 504,505,506,507 509,510	P 1 S C F EA	10	
37	321504400	A 2E	RES,FXD,FILM 26 56.2 OHM R27,30,48,158,184	P 1 S C F EA	5	
0102	321504500	A 2E	RES,FXD,FILM 26 68.1 OHM 508,511	P 1 S C F EA	2	
0057	321504600	A 2E	RES,FXD,FILM 26 82.5 OHM R102,103	P 1 S C F EA	2	
0067	321504700	A 2E	RES,FXD,FILM 26 100K R70,75,106,113,120 R127,134,141	P 1 S C F EA	8	
0068	321504800	A 2E	RES,FXD,FILM 26 332K R72,108,115,122,129 R136,143,148	P 1 S C F EA	8	
0116	321504900	A 2E	RES,FXD,FILM 26 1M R73,177,181	P 1 S C F EA	3	
[illegible]36	321505000	A 2E	RES,FXD,FILM 26 33.2 OHM R67,68	P 1 S C F EA	2	

PRINTED 02-Jan-90 12:29 PM TEKTRONIX, INC. MRI DIVISIO7

FECTIVITY DATE: ALL S I N G L E L E V E L B I L L S O F L

PARENT PART: 673945102 CKT,BD SUBASSY UM:1

ERC: SRCE CODE: A TYPE: 0 ABC:0

ITEM NO	COMPONENT PART NUMBER	ERC PROD.CODE	DESCRIPTION COM.CD	S T S A P C Y P B L UM	EXTENDED QTY	S PER T
0083	388902001	B	CIRCUIT BOARD			
		2J	SECONDARY	P 1 S A F EA	1	

NOTES:

END OF REPORT

Leaded

SET FORM TO TOP OF PAGE AND ENTER <return>

TED 02-Jan-90 12:23 PM TEKTRONIX, INC. MRI DIVISI01

FECTIVITY DATE: ALL S I N G L E L E V E L B I L L S O F L

PARENT PART: 670945102 POWER SUPPLY SECONDARY,388- UM:1
ERC: SRCE CODE: A TYPE: 0 ABC:0

ITEM NO	COMPONENT PART NUMBER	ERC PROD.CODE	DESCRIPTION COM.CD	S T S A P C Y P B L UM	EXTENDED QTY	S PER T
0050	108042200	C	COIL,RF			
		2F	Q4	P 1 S C F EA	3	
			80UH			
			L10,11,12			
0085	108055400	C	COIL,RF			
		2J	Q4	P 1 S C F EA	4	
			5UH			
			L13,14,17,18			
0009	108095800	B	COIL,RF			
		2E	Q4	P 1 S B F EA	8	
			50UH			
			L15,16,19,20,21,22			
			L23,24			
0015	120171300		XFMR,PWR,STPDN			
		2J		P 1 S B F EA	1	
			AUX XFMR 85-64D			
			T10			
0016	120171400		XFMR,PWR,STPDN			
		2J		P 1 S B F EA	1	
			MAIN XFMR 85-74F			
			T11			
0051	131058900	F	TERMINAL,PIN			
		2E	B6	P 1 S A F EA	4	
			P11			
0024	131060800	E	TERMINAL,PIN			
		2E	B6	P 1 S B F EA	2	
			J10			
0070	151094200		NPN,MJF44H11,80V			
		2J		P 0 S C F EA	4	
			MJF44H11			
			Q26,25,28,30			
0072	151094300	2	PNP,MJF45H11			
		2J		P 0 S C F EA	3	
			MJF45H11			
			Q24,27,29			
0089	151112800	C	TRANSISTOR			
		2F	3T	P 1 S C F EA	4	
			IRF9521			
			Q12,19,20,21			
0021	152045600	D	SEMICOND DVC,DI			
		2H	4E	P 1 S C F EA	1	
			IN827 / ZEN. 6.2V			
			VR10			
0081	152060000	*	SEMICOND DVC,DI			
		2F	4F	P 1 S C F EA	3	
			MB1535CT			
			CR19,20,35			

PRINTED 02-Jan-90 12:24 PM TEKTRONIX, INC. MRI DIVISIO2

EFFECTIVITY DATE: ALL S I N G L E L E V E L B I L L S O F L

PARENT PART: 670945102 POWER SUPPLY SECONDARY,388- UM:1
ERC: SRCE CODE: A TYPE: 0 ABC:0

ITEM NO	COMPONENT PART NUMBER	ERC PROD.CODE	DESCRIPTION COM.CD	S T S A P C Y P B L UM	EXTENDED QTY	S PER T
0105	152060100	C	SEMICOND DVC,DI			
		2J	4F	P 1 S C F EA	14	
			MUR115			
			CR10,11,12,13,22			
			CR24,25,26,27,28			
			CR29,30,41,57			
0082	152079300	B	SEMICOND DVC,DI			
		2J	4F	P 1 S C F EA	2	
			ESAD83-004			
			CR34,37			
0102	152086300	C	SEMICOND DVC,DI			
		2J	4F	P 1 S C F EA	2	
			BYV26C			
			CR16,23			
0075	152088400		16 AMP,35V,TO-220,AC PKG			
		2J	4F	P 1 S C F EA	6	
			MBR1635			
			CR 17,18,31,32			
			CR33,36			
0023	156116100	*	MICROCKT,LINEAR			
		2H	5K	P 1 S C F EA	1	
			LM317			
			U10			
0078	174094400	A	CA ASSY,SP,ELEC			
		2J		R 1 S C F EA	1	
			50 CONDUCTOR			
			J12			
0109	210129101	A	WASHER,SHLDR			
		2J		X 1 S C F EA	14	
			P10			
0080	211037200	A	SCREW,MACHINE			
		2J		X 1 S C F EA	2	
			4-40 X .312			
			FOR CR34,37			
0005	211040800	A	SCR,ASSEM WSHR			
		2F		X 1 S C F EA	10	
			4-40 X.250 T10			
			3-HEAT SINK TO BD			
0060	211040900	A	SCR,ASSEM WSHR			
		2J		X 1 S C F EA	14	
			4-40 X .312 T10			
0107	214395800	B	HT SK,PWR SPLY			
		2J		P 1 S C F EA	1	
0300	214409301	A	HEAT SINK,XSTR			
		2J		P 1 S C F EA	1	
0301	214409401	A	HEAT SINK,XSTR			
		2J		P 1 S C F EA	1	

PRINTED 02-Jan-90 12:24 PM TEKTRONIX, INC. MRI DIVISIO3

ACTIVITY DATE: ALL S I N G L E L E V E L B I L L S O F L

PARENT PART: 670945102 POWER SUPPLY SECONDARY,388- UM:1
ERC: SRCE CODE: A TYPE: 0 ABC:0

ITEM NO	COMPONENT PART NUMBER	ERC PROD.CODE	DESCRIPTION COM.CD	S C	T Y	S P	A B	P L	UM	EXTENDED QTY	S PER T
0220	220082900		NUT,PRESSMOUNT								
		2F		X	1		C	P	EA	3	
0071	260217400	A	SWITCH,ROCKER								
		2J	8Z	P	1	S	C	F	EA	1	
			S10								
0004	283005900	J	CAP,FXD,CER DI								
		2H	44	P	1	S	C	F	EA	16	
			1UF,50V								
			C19,21,33,47,48								
			C64,65,66,67,69								
			C73,86,95,97,99,102								
0200	283017900	F	CAP,FXD,CER DI								
		2J	44	P	1		C	P	EA	1	
			.68UF								
			C93								
0104	283020800	G	CAP,FXD,CER DI								
		2E	44	P	1	S	C	F	EA	2	
			.22UF,200V								
			C20,94								
0033	290016400	H	CAP,FXD,ELCTLC								
		2J	58	P	1	S	C	F	EA	1	
			1UF 150V								
			C38								
0077	290081701		100UF,50,AXIAL,2MM L,DIA 8								
		2J		P	0	S	C	F	EA	2	
			100UF 63V								
			C24,57								
0097	290088000	B	CAP,FXD,ELCTLT								
		2J	58	P	1	S	C	F	EA	1	
			10UF,160V								
			C60								
0052	290094300	B	CAP,FXD,ELCTLT								
		2J	58	P	1	S	C	F	EA	2	
			47UF								
			C61,68								
0001	290097300	A	CAP,FXD,ELCTLT								
		2H	58	P	1	S	C	F	EA	10	
			100UF 35V								
			C62,63,70,71,87								
			C88,89,90,91,92								
0076	290097500	A	CAP,FXD,ELCTLT								
		2J	58	P	1	S	C	F	EA	7	
			33UF,100V								
			C25,42,56								
			58,59,43,107								
0087	308083900	*	RES,FXD,WW								
		2J		P	1	S	C	F	EA	9	
			0.1 OHM								
			R153,154,170,171,182								

PRINTED 02-Jan-90 12:25 PM TEKTRONIX, INC. MRI DIVISI04

CTIVITY DATE: ALL S I N G L E L E V E L B I L L S O F L

PARENT PART: 670945102 POWER SUPPLY SECONDARY,388- UM:1
ERC: SRCE CODE: A TYPE: 0 ABC:0

ITEM NO	COMPONENT PART NUMBER	ERC PROD.CODE	DESCRIPTION COM.CD	S T S A P C Y P B L UM	EXTENDED QTY	S PER T
			172,173,185,186			
0103	311123800	C	RES,VAR,NONWW			
		2E	86	P 1 S C F EA	1	
			5K			
			R10			
0012	321028907	R	RES,FXD,FILM			
		2E	16	P 1 S C F EA	6	
			10K 0.1%			
			R43,44,45,46,50,52			
0090	321069707	A	RES,FXD,FILM			
		2J	16	P 1 S C F EA	1	
			18.9K .1%			
			R53			
0022	321098607	A	RES,FXD,FILM			
		2J	16	P 1 S C F EA	1	
			25K .1%			
			R51			
	342086800		INSULATOR,ELEC			
		2J		P 1 S C F EA	14	
0073	342086900		INSULATOR,ELEC			
		2J		P 9 S C F EA	2	
			CR19,20			
0074	673945102		CKT,BD SUBASSY			
		2J		A 0 A P EA	1	

NOTES:

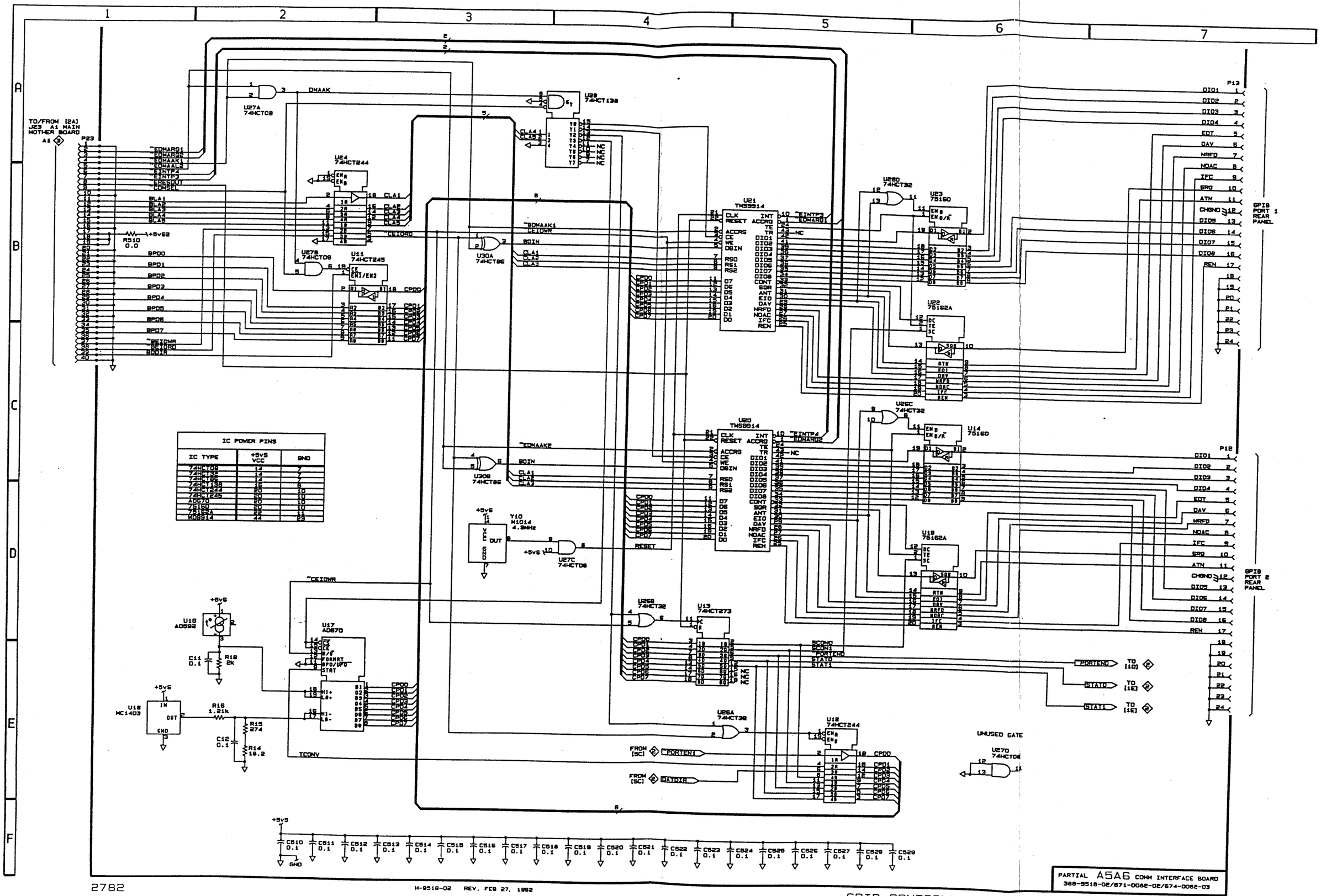

IC POWER PINS		
IC TYPE	+5VS VCC	GND
74HCT08	14	7
74HCT32	14	7
74HCT86	14	7
74HCT138	16	8
74HCT244	20	10
74HCT245	20	10
AD670	20	10
75160	20	10
75162A	20	10
TMS9914	44	23

2782

H-9518-02 REV. FEB 27, 1992

GPIB CONTROLLER / TEMPERTURE SENSOR A5A6

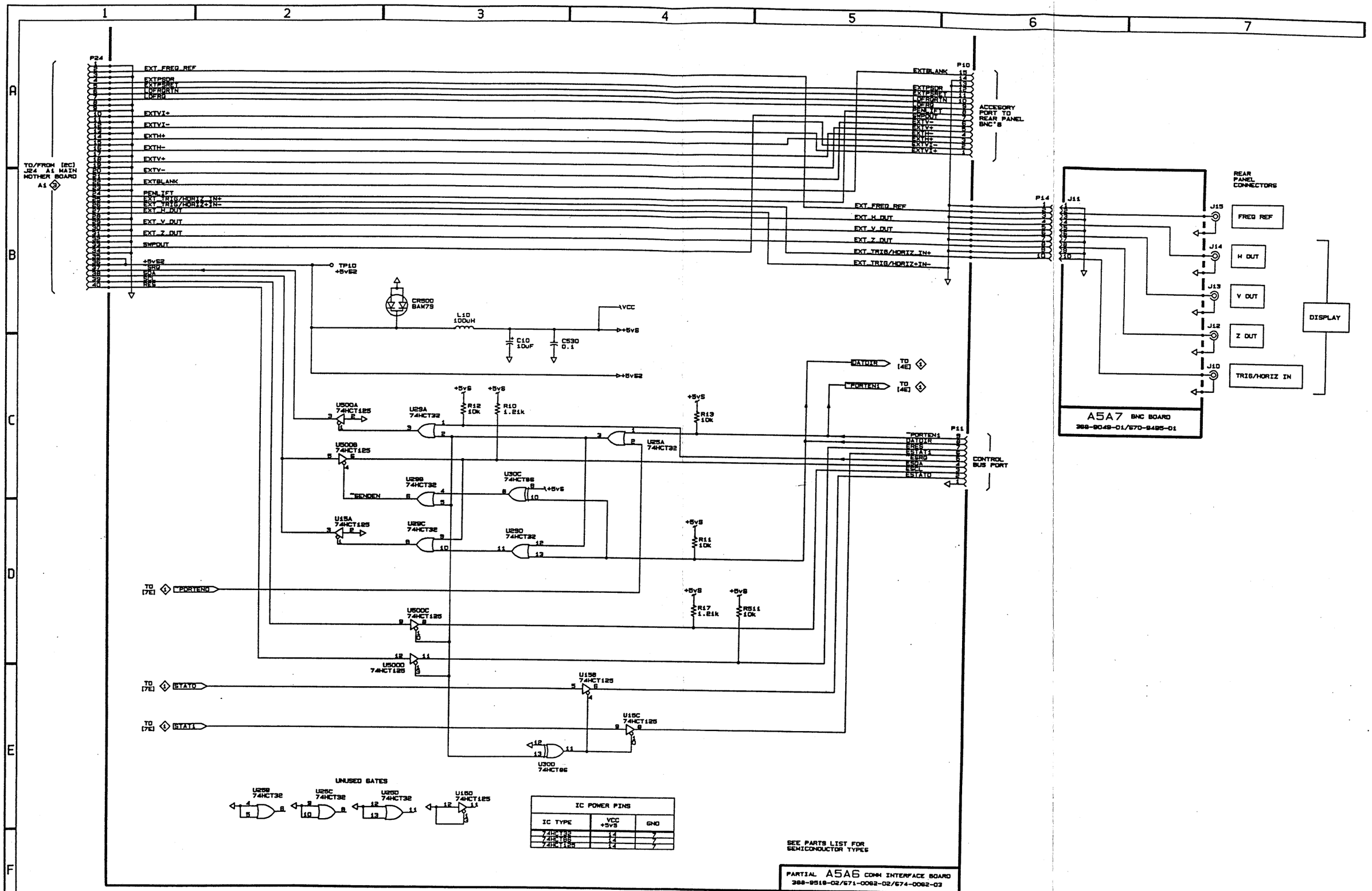
1
2
3
4
5
6
7
A
B
C
D
E
F
P24
TO/FROM [2C] J24 A1 MAIN MOTHER BOARD
A1
EXT_FREQ_REF
EXTPSDR
EXTPSRET
LOFRQRTN
LOFRQ
EXTVI+
EXTVI-
EXTH+
EXTH-
EXTV+
EXTV-
EXTBLANK
PENLIFT
EXT_TRIG/HORIZ_IN+
EXT_TRIG/HORIZ+IN-
EXT_H_OUT
EXT_V_OUT
EXT_Z_OUT
SWPOUT
+5VS2
SRQ
SDA
SCL
RES
TP10
+5VS2
CR500
BAW75
L10
100UH
VCC
+5VS
C10
10UF
C530
0.1
P10
ACCESORY PORT TO REAR PANEL BNC'S
P14
J11
REAR PANEL CONNECTORS
J15
FREQ REF
J14
H OUT
J13
V OUT
J12
Z OUT
J10
TRIG/HORIZ IN
DISPLAY
A5A7 BNC BOARD
388-9049-01/670-0495-01
DATDIR
TO [4E]
~PORTEN1
TO [4E]
U500A
74HCT125
U29A
74HCT32
R12
10K
R10
1.21k
R13
10K
U25A
74HCT32
P11
CONTROL BUS PORT
U500B
74HCT125
U29B
74HCT32
U30C
74HCT86
~BENDEN
U15A
74HCT125
U29C
74HCT32
U29D
74HCT32
R11
10K
TO [7E]
~PORTEN0
R17
1.21k
R511
10K
U600C
74HCT125
U5000
74HCT125
TO [7E]
STAT0
U15B
74HCT125
TO [7E]
STAT1
U15C
74HCT125
U300
74HCT86
UNUSED GATES
U29E
74HCT32
U25C
74HCT32
U25D
74HCT32
U15D
74HCT125
IC POWER PINS
IC TYPE
VCC +5VS
GND
74HCT32 14 7
74HCT86 14 7
74HCT125 14 7
SEE PARTS LIST FOR SEMICONDUCTOR TYPES
PARTIAL A5A6 COMM INTERFACE BOARD
388-9518-02/671-0062-02/674-0062-03

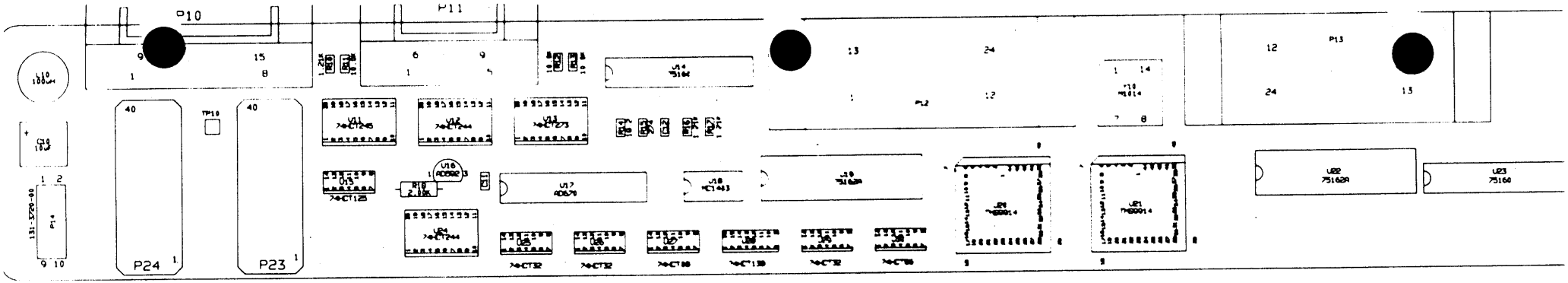

TITLE: COMMUNICATIONS INTERFACE:2-GPIB	SCALE: 1:1
BOARD NUMBER: HA-9518-02	
SHEET TITLE: ASSEMBLY-FRONT	
TEKTRONIX — DATE: 5/14/91 — LAYER: AF — DESIGNED BY: B. ROWTREE	DOCUMENT NO. TK02D5 — REV F
COMPUTER-AIDED DESIGN BY PACIFIC DESIGN ENGINEERING	
★ BLACK STAR-POS FILM	

NOTE: UNLESS OTHERWISE INDICATED
1. ALL RESISTANCES ARE IN OHMS
2. ALL CAPACITANCES ARE IN PICOFARADS
3. ALL UNMARKED CAPS ARE 0.1uF (283-5004-00)

ASSEMBLY DWG-FRT	
BD. #HA-9518-02	
BD. NAME: COMMUNICATION I/F:2-GPIB	
EE: X	
ECB: DELKER X2319	
DATE: 5/14/91	PROJECT # 2782
DRAWER #2-7	
MOD #	REVISION DATE

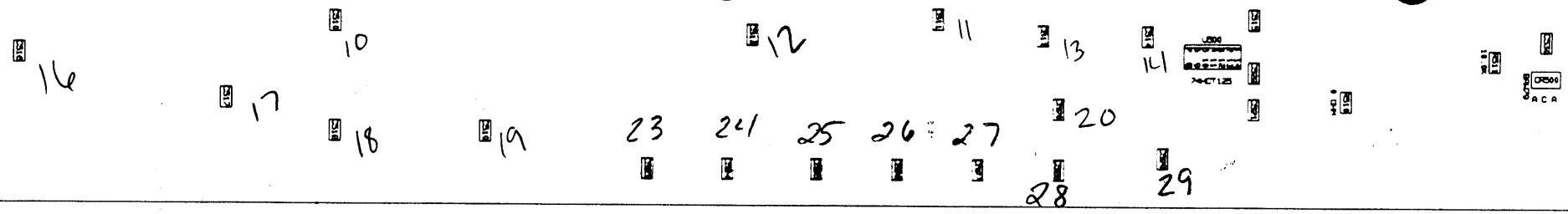

TITLE: COMMUNICATIONS INTERFACE:2-GPIB			SCALE: 1:1
BOARD NUMBER: HA-9518-02			
SHEET TITLE: ASSEMBLY-BACK(BACK VIEW)			
EXTRONIX	DATE: 5/14/91	LAYER: AB-B	DOCUMENT NO. TK02D5 / REV F
	DESIGNED BY: B. ROWTREE		
COMPUTER-AIDED DESIGN BY PACIFIC DESIGN ENGINEERING			

ASSEMBLY DWG-BOX
BD. # HA-9518-02
BD. NAME:
COMM IF:2-GPIB
EE:MR/MS Y X2222
ECB:DELKER X2319
DATE: 5/14/91 PROJECT #
DRAWER # 2-7 2782

MOD #	REVISION DATE
PROTOTYPE	5/14/91

NOTES: UNLESS OTHERWISE INDICATED
1. ALL RESISTANCES ARE IN OHMS
2. ALL CAPACITANCES ARE IN PICOFARADS
3. ALL UNMARKED CAPS ARE 0.1uF (283-5004-00)

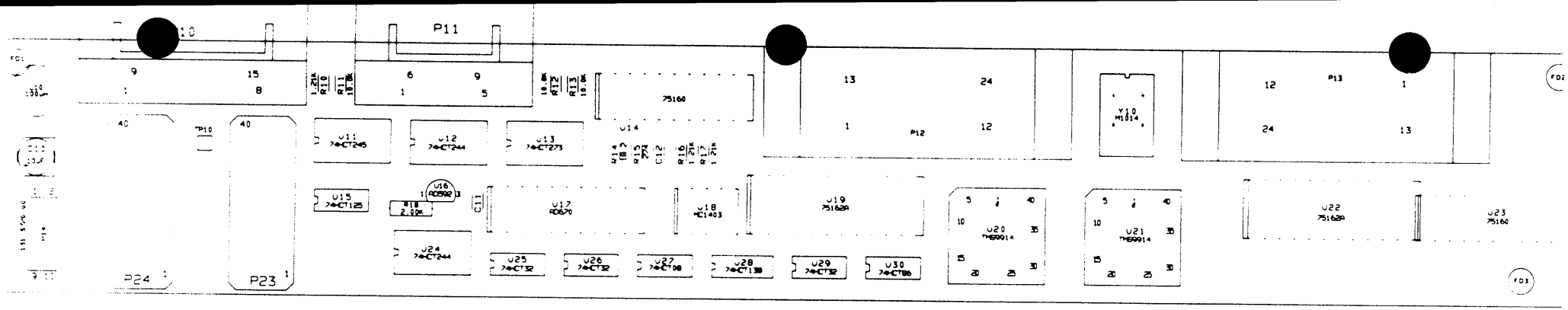

COMMUNICATIONS INTERFACE:2-GPIB
HA-9518-03
ASSEMBLY-FRONT
11/09/93

NOTE: UNLESS OTHERWISE INDICATED
1. ALL RESISTANCES ARE IN OHMS
2. ALL CAPACITANCES ARE IN PICOFARADS
3. ALL UNMARKED CAPS ARE 0.1µF (283-5004-00)

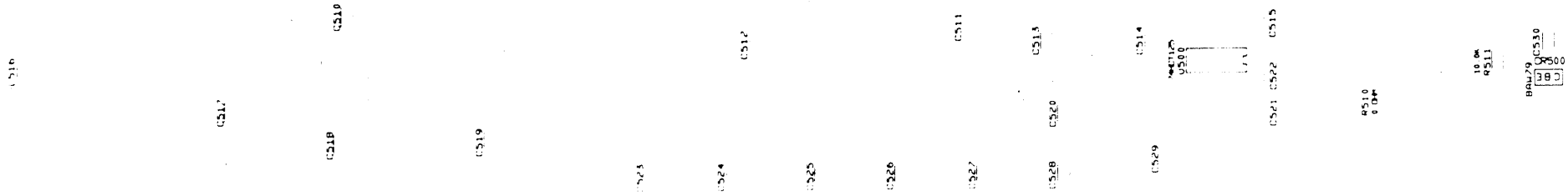

HA-9518-03
ASSEMBLY-BACK

SET FORM TO TOP OF PAGE AND ENTER <return>

VITY DATE: ALL

S I N G L E L E V E L B I L L S O F M A T E R I A L

PARENT PART: 671008203 COMMUNICATIONS INTERFACE:;3 UM: EA PC: 2E-111 ECN: ASSEMBLY QTY: 1
ERC: SRCE CODE: A TYPE: 0 ABC: A PL: P DATE: 00-XXX-00

ITEM NO	COMPONENT PART NUMBER	ERC PROD.CODE	DESCRIPTION COM.CD	S T S A P C Y P B L UM	EXTENDED QTY PER	START DATE	START S/N	CLOSE DATE	CLOSE S/N	OPR SEQ	LT OFF	STORES ACCOUNT
0001	020161200		ACCESSORY KIT									
		2E-1111		P 1 S C P EA	2					10	0	2782
			FOR P13 & P12									
0023	108126200		COIL,RF									
		25-25		P 1 N B P EA	1					10	0	2782
			100UH									
			L10									
0002	131392500		CONN,D-SUB									
		25-25		P 1 C P EA	1		PICN13			10	0	2782
			9 PIN RT ANG									
			P11									
0003	131404600		CONN,D-SUB:									
		2E-1111	B6	P 1 S C P EA	1		PICN14			10	0	2782
			15 PIN RT ANG									
			P10									
0006	131412400		CONN,RIBBON:									
		2E-1111		P 1 S C P EA	1					10	0	2782
			24 POSITION R ANGLE									
			REVERSED									
			P13									
0022	131446300		CONN,RIBBON:									
		2E-1111		P 1 S C P EA	1					10	0	2782
			24 POS NORM, RT ANG									
			P12									
0013	156117300	D	IC,LINEAR									
		25-25		P 1 N B P EA	1					10	0	2782
			MC1403 8-DIP									
			U18									
0017	156141400	B	IC,DIGITAL									
		25-25	4P	P 1 S C P EA	2		P14BA			10	0	2782
			75160 20-DIP									
			U14,23									
0032	156145900	A	IC,DIGITAL									
		25-25	7J	P 1 S C P EA	2					10	0	2782
			75162A 22-DIP									
			U19,22									
0033	156246100		IC,MISC									
		2E-1111		P 1 C P EA	1					10	0	2782
			AD592 TO-92									
			U16									
0011	156321400	*	IC,CONVERTER									
		2E-1111	5M	P 1 S C P EA	1					10	0	2782
			AD670 20-DIP									
			U17									
	174024200	C	CA ASSY,SP,ELEC									
		2E-1111		P 1 S C P EA	1					10	0	2782
			3M 2X5 5"									
			P14									
			COMM I\F TO									

CTIVITY DATE: ALL

S I N G L E L E V E L B I L L S O F M A T E R I A L

PARENT PART: 671008203 COMMUNICATIONS INTERFACE;;3 UM: EA PC: 2E-111 ECN: ASSEMBLY QTY: 1
ERC: SRCE CODE: A TYPE: 0 ABC: A PL: P DATE: 00-XXX-00

ITEM NO	COMPONENT PART NUMBER	ERC PROD.CODE	DESCRIPTION COM.CD	S T S A P C Y P B L UM	EXTENDED QTY PER	START DATE	START S/N	CLOSE DATE	CLOSE S/N	OPR SEQ	LT OFF	STORES ACCOUNT
			REAR PANEL BNC									
0009	174088300	D	CA ASSY,SP,ELEC									
		2E-1111	99	P 1 S B P EA	2					10	0	2782
			40-PIN SHIELDED									
			P23,24									
0027	321022207	R	RES,FXD,FILM									
		2E-1111	16	P 1 S C P EA	1					10	0	2782
			2.00K									
			R18									
0050	674008203		388-9518-XX MACH INSERTED C									
		2E-1111		A 0 B P EA	1		74840			10	0	2782

NOTES:

VITY DATE: ALL

S I N G L E L E V E L B I L L S O F M A T E R I A L

PARENT PART: 674008203 388-9518-XX MACH INSERTED C UM: EA PC: 2E-1111 ECN: ASSEMBLY QTY: 1
ERC: SRCE CODE: A TYPE: 0 ABC: B PL: P DATE: 00-XXX-00

ITEM NO	COMPONENT PART NUMBER	ERC PROD.CODE	DESCRIPTION COM.CD	S T S A P C Y P B L	UM	EXTENDED QTY PER	START DATE	S/N	CLOSE DATE	S/N	OPR SEQ	LT OFF	STORES ACCOUNT
0040	152500800	*	DIODE,RECT										
		2E-1111	4F	P 1 S B P	EA	1					10	1	3888
			BAW79D										
			CR500										
0007	156507000	A	IC,DIGITAL										
		2E-3888	1T	P 1 S B P	EA	2					10	1	3888
			74HCT244										
			U12,24										
0015	156507100	A	IC,DIGITAL										
		2E-3888	1T	P 1 S B P	EA	1					10	1	3888
			74HCT245										
			U11										
0014	156508500	*	IC,DIGITAL										
		2E-3888	1T	P 1 S C P	EA	3					10	1	3888
			74HCT32										
			U25,26,29										
0005	156508800	A	IC,DIGITAL										
		2E-3888	1T	P 1 S C P	EA	1					10	1	3888
			74HCT138										
			U28										
0006	156514600	A	IC,DIGITAL										
		2E-3888	1T	P 1 S C P	EA	1					10	1	3888
			74HCT08										
			U27										
0002	156514700	A	IC,DIGITAL										
		2E-3888	1T	P 1 S C P	EA	1					10	1	3888
			74HCT273										
			U13										
0004	156519800		IC,DIGITAL										
		2E-3888	1T	P 1 S C P	EA	1					10	1	3888
			74HCT86										
			U30										
0017	156530400	*	IC,DIGITAL										
		2E-3888	1T	P 1 S C P	EA	2					10	1	3888
			74HCT125										
			U15,500										
0001	156622300		IC,PROCESSOR										
		2E-1111		P 1 S B P	EA	2					10	1	3888
			U20,21										
0003	158500400		OSCILLATOR,RF										
		2E-1111		P 1 S C P	EA	1					10	1	3888
			M1014 5MHZ										
			Y10										
			4.9 MHZ										
(	283500400		CAP,FXD,CER DI										
		25-25		P 1 S A P	EA	23					10	1	3888
			.1UF										
			C11,12,510,511,512										
			C513,514,515,516,517										

ITY DATE: ALL

S I N G L E L E V E L B I L L S O F M A T E R I A L

PARENT PART: 674008203 388-9518-XX MACH INSERTED C UM: EA PC: 2E-1111 ECN: ASSEMBLY QTY: 1
ERC: SRCE CODE: A TYPE: 0 ABC: B PL: P DATE: 00-XXX-00

ITEM NO	COMPONENT PART NUMBER	ERC PROD.CODE	DESCRIPTION COM.CD	S T S A P C Y P B L UM	EXTENDED QTY PER	START DATE	START S/N	CLOSE DATE	CLOSE S/N	OPR SEQ	LT OFF	STORES ACCOUNT
			C518,519,520,521,522 C523,524,525,526,527 C528,529,530									
0022	290503900	A 2E-1111	CAP,FXD 58 C10	P 1 S C P EA	1		74840			10	1	3888
0029	321500300	C 2E-3888	RES,FXD,FILM 26 18.2 OHM R14	P 1 S C P EA	1					10	1	3888
0028	321501100	B 2E-3888	RES,FXD,FILM 26 274 OHM R15	P 1 S C P EA	1					10	1	3888
0025	321501900	A 2E-3888	RES,FXD,FILM 26 1.21K R10,16,17	P 1 S C P EA	3					10	1	3888
	321503000	A 2E-3888	RES,FXD,FILM 26 10K R11,12,13,511	P 1 S B P EA	4					10	1	3888
0041	321505100	1 2E-3888	RES,FXD,FILM 26 0 OHM R510	P 1 S C P EA	1					10	1	3888
0050	388951802	D 2E-3888	COMM INTER;2,GPIB	R 0 S C P EA	1		74840			5	0	3888

NOTES:

END OF REPORT

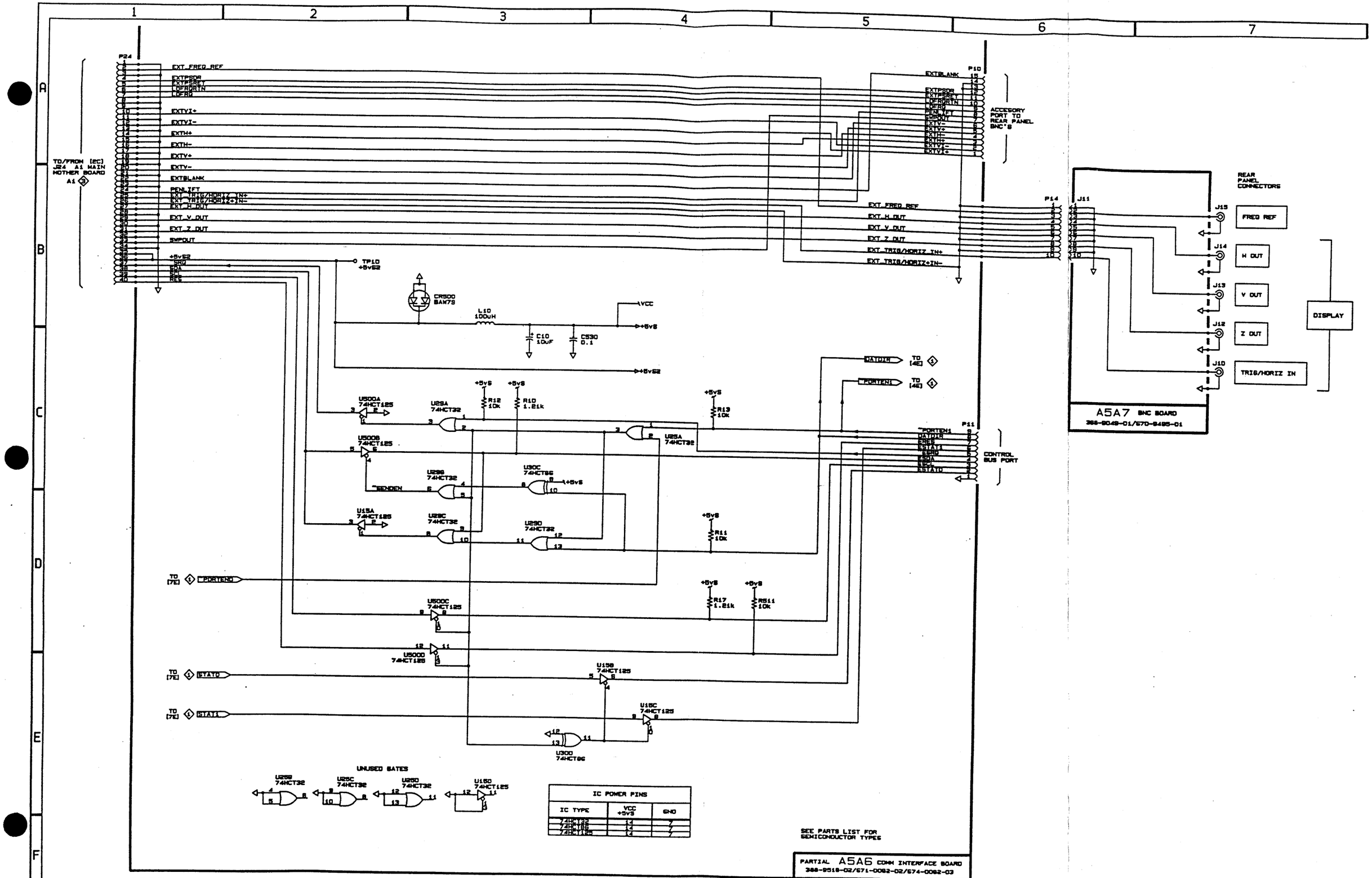
P24
TO/FROM [EC] J24 A1 MAIN MOTHER BOARD
EXT_FREQ_REF
EXTPSDR
EXTPSRET
LOFRDRTN
LOFRQ
EXTVI+
EXTVI-
EXTH+
EXTH-
EXTV+
EXTV-
EXTBLANK
PENLIFT
EXT_TRIG/HORIZ_IN+
EXT_TRIG/HORIZ+IN-
EXT_H_OUT
EXT_V_OUT
EXT_Z_OUT
SWPOUT
+5vS2
SDA
SCL
RES
TP10 +5vS2
CR500 BAW79
L10 100UH
C10 10uF
C530 0.1
VCC
+5vS
U500A 74HCT125
U29A 74HCT32
R12 10K
R10 1.21k
U29B 74HCT32
U30C 74HCT86
U15A 74HCT125
U29C 74HCT32
U29D 74HCT32
R11 10K
R13 10K
U29A 74HCT32
R17 1.21k
R511 10K
U500C 74HCT125
U500D 74HCT125
U15B 74HCT125
U15C 74HCT125
U300 74HCT86
DATDIR
PORTEN1
PORTEN0
STAT0
STAT1
BENDEN
TO [4E]
TO [7E]
P10
ACCESORY PORT TO REAR PANEL BNC'S
P14
J11
P11
CONTROL BUS PORT
REAR PANEL CONNECTORS
J15
J14
J13
J12
J10
FREQ REF
H OUT
V OUT
Z OUT
TRIG/HORIZ IN
DISPLAY
A5A7 BNC BOARD
268-9049-01/670-8495-01
UNUSED GATES
U29B 74HCT32
U29C 74HCT32
U29D 74HCT32
U15D 74HCT125
IC POWER PINS
IC TYPE
VCC +5VS
GND
74HCT32 14 7
74HCT86 14 7
74HCT125 14 7
SEE PARTS LIST FOR SEMICONDUCTOR TYPES
PARTIAL A5A6 COMM INTERFACE BOARD
388-9518-02/671-0082-02/674-0082-03

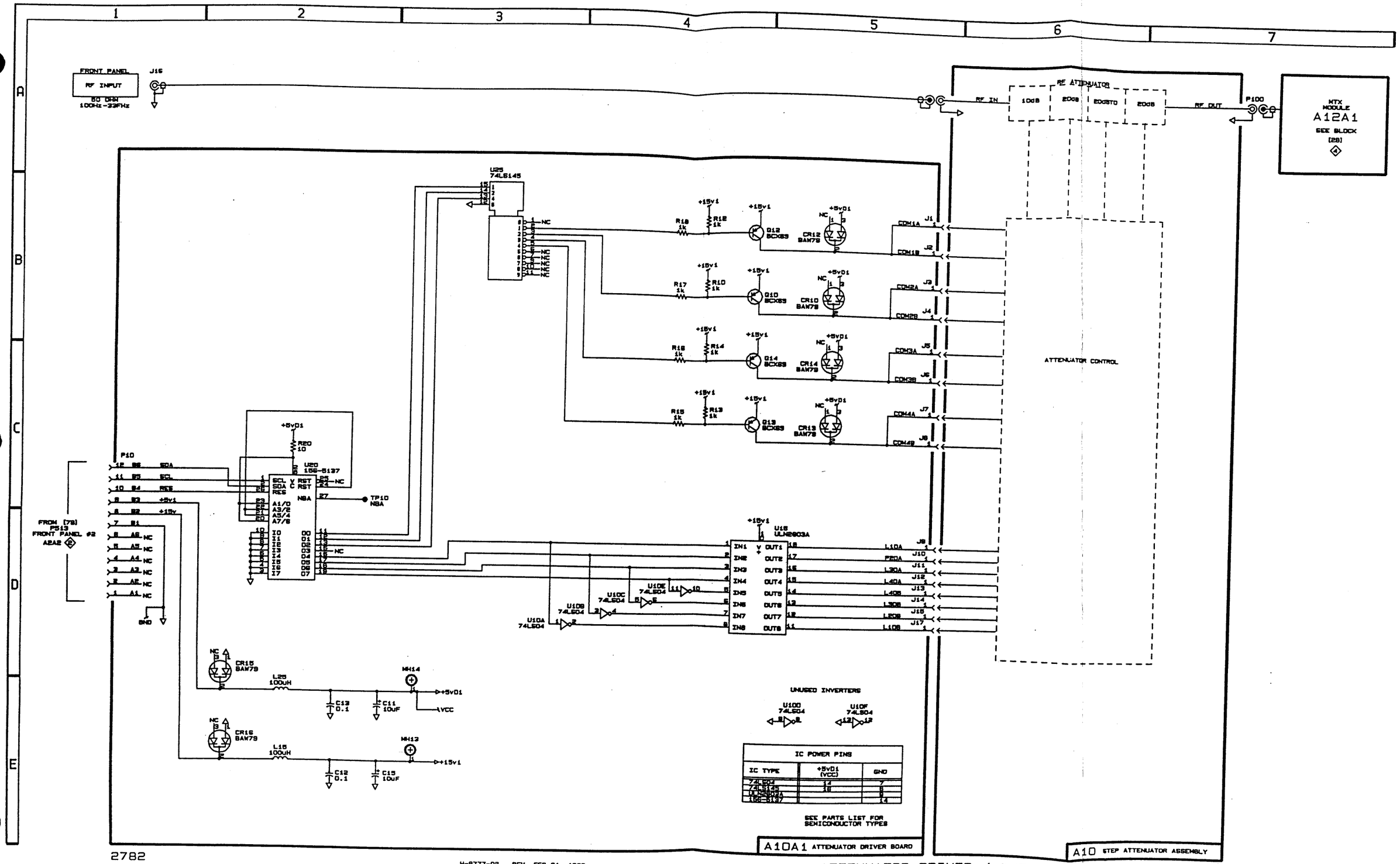

2782

H-8777-02 REV. FEB 21, 1992

ATTENUATOR DRIVER / STEP ATTENUATOR A10A1 1

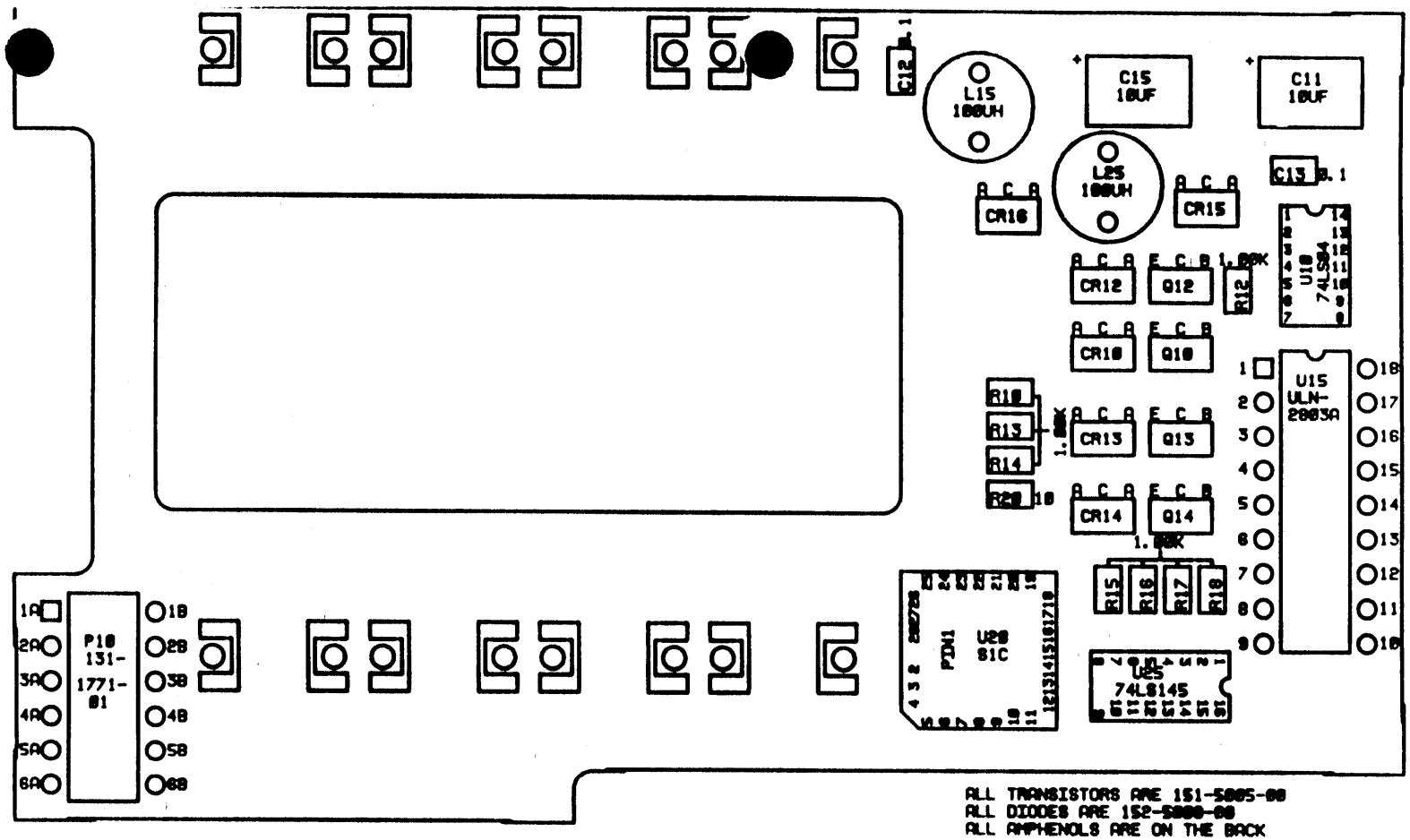

ALL TRANSISTORS ARE 151-5005-00
ALL DIODES ARE 152-5000-00
ALL AMPHENOLS ARE ON THE BACK

TITLE ATTENUATOR DRIVER				SCALE 2X
BD. NUMBER H-9777-01				
SHEET TITLE FRONT ASSEMBLY				
TEKTRONIX	DATE: 08/01/88	LAYER NO.	DOCUMENT NO. TK154C	REV C
	DESIGNED BY RD			

BLACK STAR - POS FILM

DIGITIZED BY SYNERTECH, INC D1

L8

ASSEMBLY DRAWING FRONT ONLY
BD# H-9777-01
BD NAME ATTENUATOR DRIVER
EE MATT KAMNA X 4274
ECB RUTH D. X 2319
DATE 07/11/88 PROJECT
DRAWER # 2-4 2782

E C B	

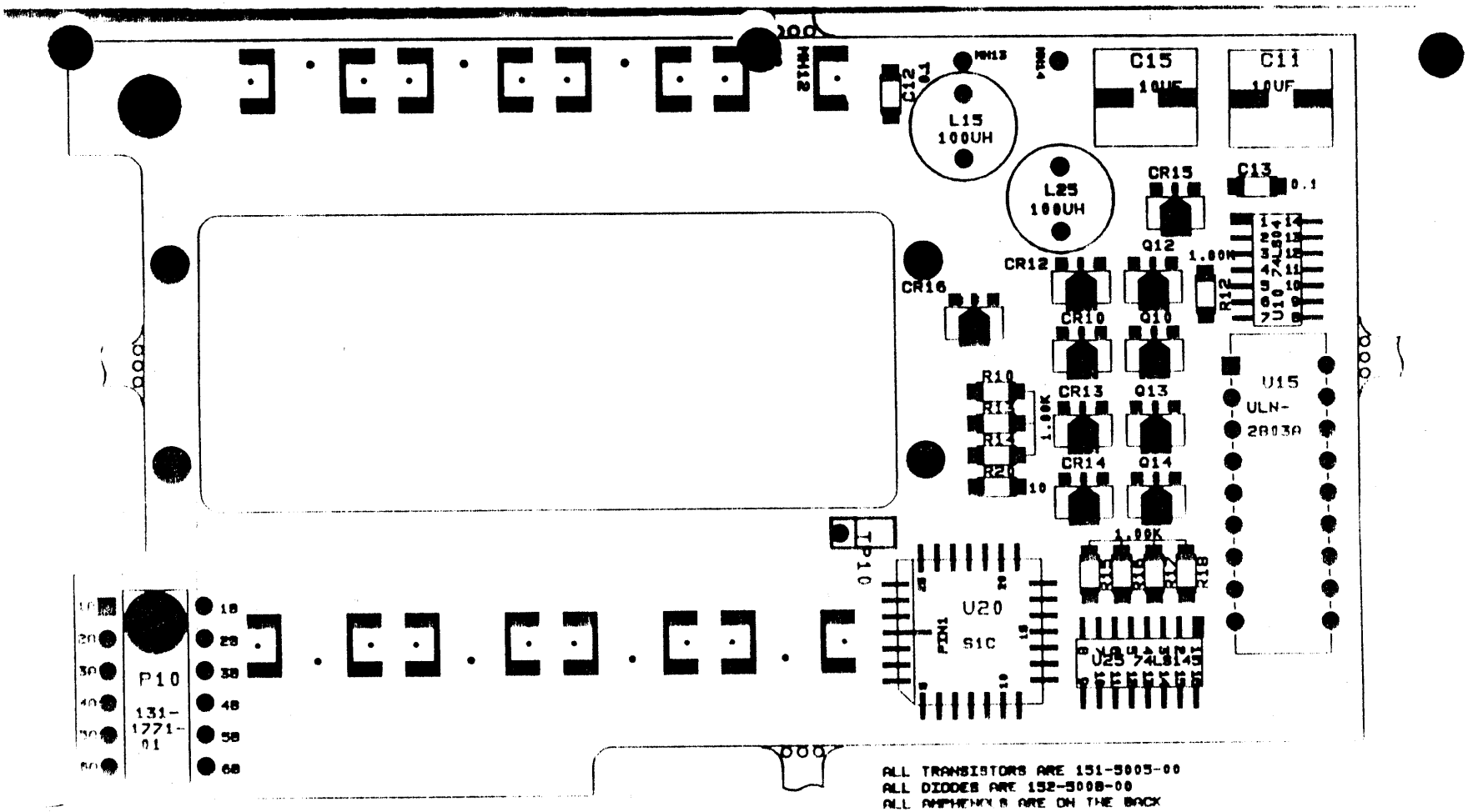

TITLE: ATTENUATOR DRIVER			SCALE
BOARD# H-9777-02			
SHEET TITLE: FRONT ASSEMBLY			
TEK IG	DATE: 10/28/91	LAYER#	REV
	DESIGNER: PMF/SGB	DOCUMENT#	D
	POSITIVE FILM	0691	

ASSEMBLY DRAWING: FRONT ONLY
BD# H-9777-02
BD NAME: ATTENUATOR DRIVER
DATE: 10/04/91

MOD#	REV	DATE	
			EE
			ECB
			PROJ
			DRAWER#

PRINTED 19 Jun-91 02:13 PM TV PRODUCTS BM VERS

EFFECTIVITY DATE: ALL

I N D E N T E D B I L L S O F M A T E R I A L

PARENT PART: 671023901 ATTEN SOLENION INTERFACE UM: EA PC: 2E ECN:

ERC: SRCE CODE: A TYPE: 1 ABC: B PL: P DATE: 00

LEVEL	ITEM NO	COMPONENT PART NUMBER/ PART DESCRIPTION	ERC	PRODUCT CODE	S C	T Y	S P	A B	P L	UM	EXTENDED QTY PER	ECN CHG	START DATE	S/I
2	0002	108126200 COIL, RF	100UH L15, 25	25	P	1	N	B	P	EA	2			
2	0004	131177100 CONN, BOX:	A	25	P	1	S	B	P	EA	1			
2	0001	136026304 SOCKET, PIN TERM	P10 G	25	P	1	S	B	P	EA	16			
2	0005	156332800 MICROCKT, LINEAR	*	2E	P	1	S	C	P	EA	1			
2	0006	674023901 388-9777-XX MACH INSERTED	ULN2803 18-DIP U15	2E	A	1		B	P	EA	1			P12
3	0001	151500500 TRANSISTOR, SIG	B	2E	P	1	S	B	P	EA	4			
3	0002	152500800 DIODE, RECT	BCX69 Q10, 12, 13, 14 *	2E	P	1	S	B	P	EA	6			
3	0150	156501000 IC, DIGITAL	BAW79 CR10, 12, 13, 14 15, 16 *	2E	P	1	S	C	P	EA	1			
3	0003	156504900 IC, DIGITAL	74LS04 U10 B	2E	P	1	S	C	P	EA	1			
3	0004	156513700 MICROCKT, DGTL	74LS145 U25 *	2E	P	1	S	B	P	EA	1			
3	0006	283500400 CAP, FXD, CER DI	U20	2E	P	1	S	A	P	EA	2			
3	0005	290500100 CAP, FXD, ELCTLT	.1UF C12, 13 B	2E	P	3	S	B	P	EA	2			
3	0301	321500000 RES, FXD, FILM	10UF C11, 15 C	2E	P	1	S	B	P	EA	1			P94
3	0008	321501800 RES, FXD, FILM	10 OHM R20 A	2E	P	1	S	B	P	EA	8			

PRINTED 19 Jun-91 02:13 PM TV PRODUCTS BM VERSI

EFFECTIVITY DATE: ALL

I N D E N T E D B I L L S O F M A T E R I A L

PARENT PART: 671023901 ATTEN SOLENION INTERFACE UM: EA PC: 2E ECN:

ERC: SRCE CODE: A TYPE: 1 ABC: B PL: P DATE: 00-

LEVEL	ITEM NO	COMPONENT PART NUMBER/ PART DESCRIPTION	ERC	PRODUCT CODE	S C	T Y	S P	A B	P L	UM	EXTENDED QTY PER	ECN CHG	START DATE	S/N
			1.00K R10,12,13,14 R15,16,17,18											
3	0026	388977701 ATTEN SOLENOID INTERFACE	C	2E	R	1	S	C	P	EA	1			3224

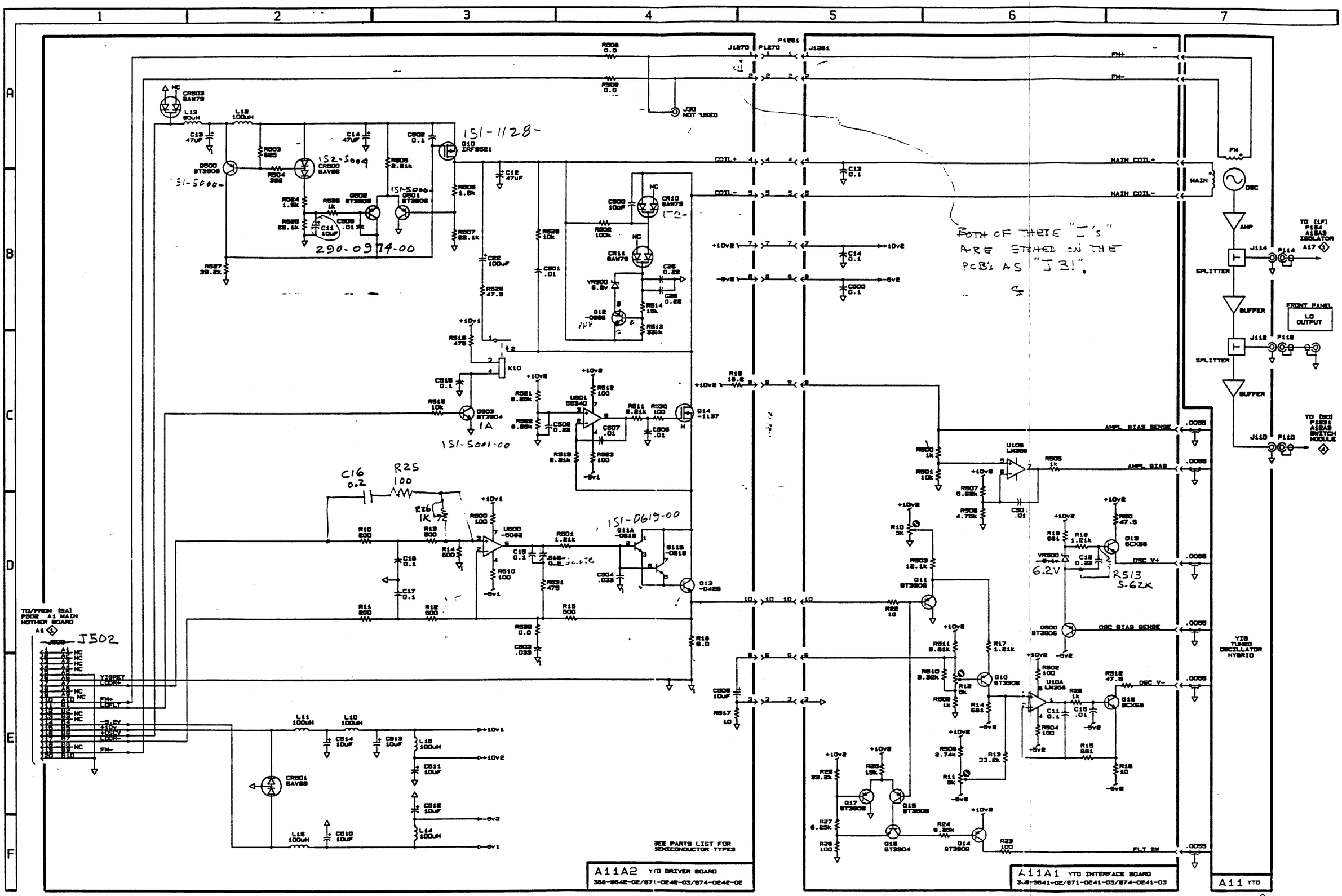
151-1128-
152-5004
151-5000-
290-0974-00
151-5001-00
151-0619-00
BOTH OF THESE "I"S ARE ETCHED ON THE PCB'S AS "J31".
J502
TO/FROM [5A] P502 A1 MAIN MOTHER BOARD
A11A2 YTO DRIVER BOARD
A11A1 YTO INTERFACE BOARD
SEE PARTS LIST FOR SEMICONDUCTOR TYPES
YTO TUNED OSCILLATOR HYBRID
A11 YTO
FRONT PANEL LO OUTPUT
TO [5F] P1S4 A1S4B ISOLATOR A17
TO [5G] P1S2 A1S4B SWITCH MODULE
2782
YTO DRIVER/YTO INTERFACE
A11

YTO Interface board test points:

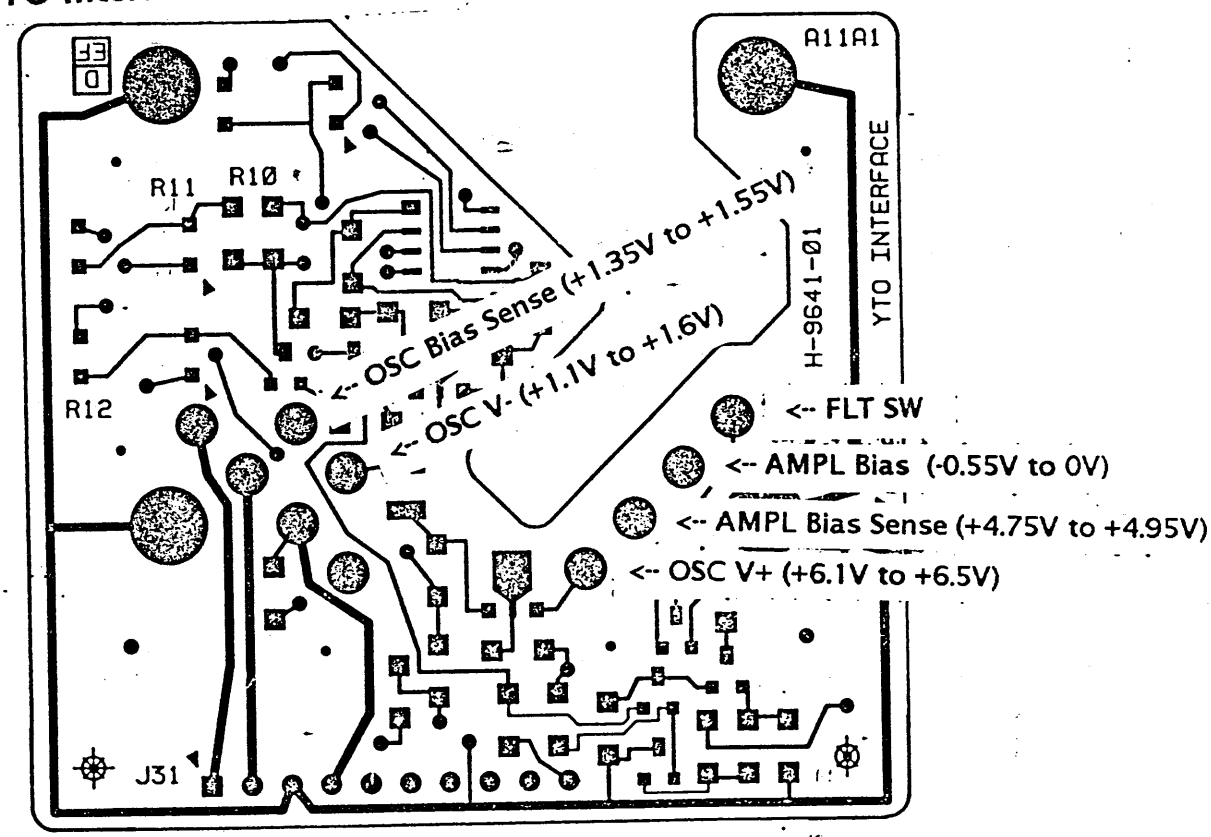

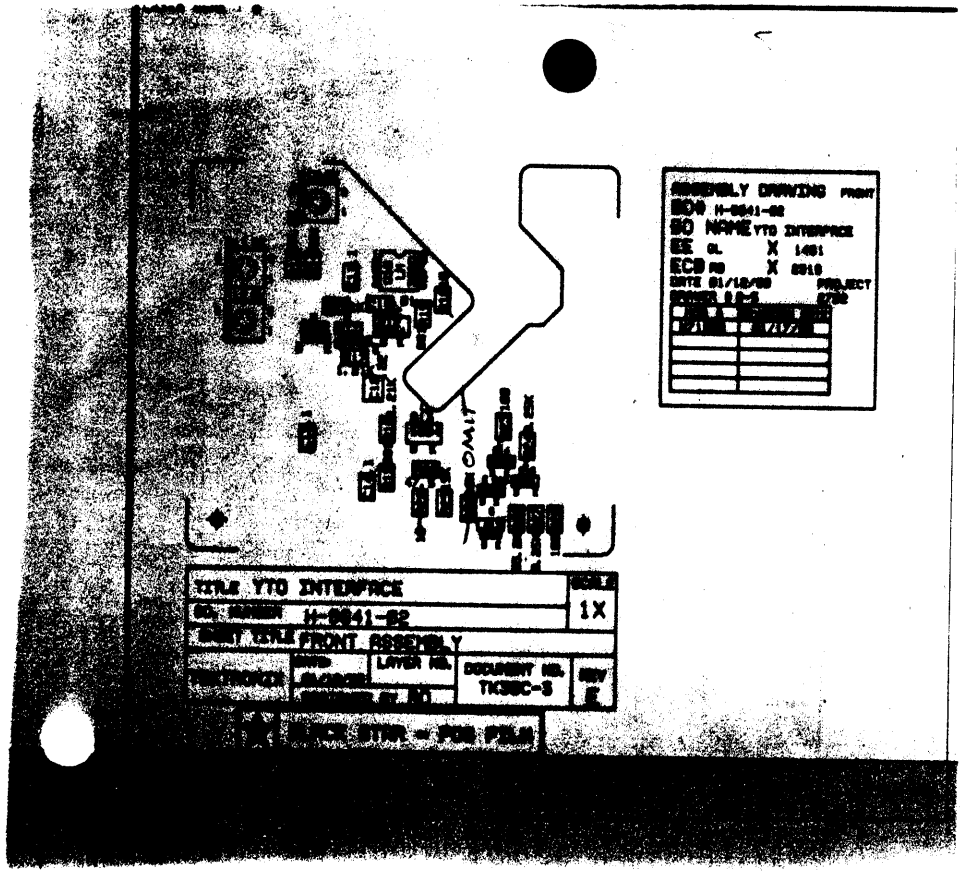
ASSEMBLY DRAWING FRONT
SO NAME YTO INTERFACE
EE GL X 1481
ECB X
PROJECT
TITLE YTO INTERFACE
SCALE
1X
FRONT ASSEMBLY
LAYER NO.
DOCUMENT NO.
TIC38C-S
REV
OMIT

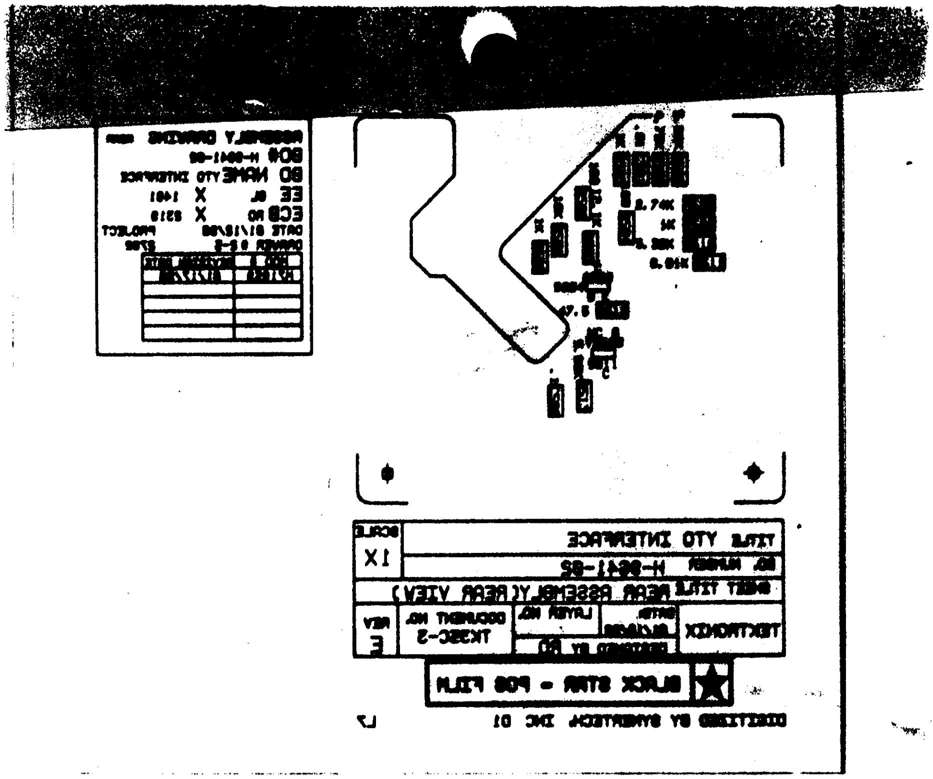
ASSEMBLY DRAWING
BD NAME YTO INTERFACE
TITLE YTO INTERFACE
SCALE
1X
SHEET TITLE REAR ASSEMBLY(REAR VIEW)
TEKTRONIX
REV
E
BLACK STAR - POS FILM
DIGITIZED BY SYNERTECH, INC 01

EFFECTIVITY DATE: ALL

INDENTED BILLS OF MATERIAL

PARENT PART: 671024103 YIG OSC INTERFACE;;388-9641 UM: EA PC: 2E ECN:
ERC: SRCE CODE: A TYPE: 1 ABC: B PL: P DATE: 00

LEVEL	ITEM NO	COMPONENT PART NUMBER/ PART DESCRIPTION	ERC	PRODUCT CODE	S C	T Y	S P	A B	P L	UM	EXTENDED QTY PER	ECN CHG	DATE	START S/
2	0001	131142600 CONN, HDR: RT ANGLE J31	B	25	X	1	N	B	P	EA	0.278000			509
2	0010	311501100 RES, VAR, NONWW 5K OHM R10 11 12	C	2E	P	1	S	C	P	EA	3			595
2	0006	674024103 388-9641-XX MACH INSERTED		2E	A	1		C	P	EA	1			
3	0001	151500000 TRANSISTOR, SIG 3906 Q10, 11, 14, 15, 17, 500	B	2E	P	1	S	B	P	EA	6			
3	0003	151500100 TRANSISTOR, SIG Q16	B	2E	P	1	S	B	P	EA	1			
3	0002	151500400 TRANSISTOR, SIG BCX68 Q12, 13	*	2E	P	1	S	B	P	EA	2			
3	0014	152501100 DIODE, SIG BZ5234 VR500		2E	P	1	S	C	P	EA	1			
3	0006	156501800 IC, LINEAR LM358 U10	A	2E	P	1	S	B	P	EA	1			
3	0007	283500300 CAP, FXD, CER DI .01UF C15, 501	*	2E	P	1	S	B	P	EA	2			
3	0008	283500400 CAP, FXD, CER DI .1UF C11, 13, 14, 500		2E	P	1	S	A	P	EA	4			
3	0009	283501000 CAP, FXD, CER DI .22UF C12	A	2E	P	1	S	B	P	EA	1			
3	0011	321500000 RES, FXD, FILM 10 OHM R16, 22	C	2E	P	1	S	B	P	EA	2			
3	0012	321500600 RES, FXD, FILM 100 OHM R23, 28, 502, 504	B	2E	P	1	S	C	P	EA	4			

PRINTED [illegible]-Jun-91 02:13 PM TV PRODUCTS 'L VER

EFFECTIVITY DATE: ALL

INDENTED BILLS OF MATERIAL

PARENT PART: 671024103 YIG OSC INTERFACE, 388-9641 UM: EA PC: 2E ECN:

ERC: SRCE CODE: A TYPE: 1 ABC: B PL: P DATE: 0

LEVEL	ITEM NO	COMPONENT PART NUMBER/ PART DESCRIPTION	ERC	PRODUCT CODE	STCY	STYP	SABL	APUM	EXTENDED QTY PER	ECN CHG	DATE	START	S
3	0013	321501600 RES,FXD,FILM 681 OHM R14,15,19	A	2E	P	1	S	C	P EA	3			
3	0015	321501800 RES,FXD,FILM 1.00K R29,500,505,509	A	2E	P	1	S	B	P EA	4			
3	0030	321501900 RES,FXD,FILM 1.21 K R17,18	A	2E	P	1	S	C	P EA	2			
3	0017	321502300 RES,FXD,FILM 2.74K R508	A	2E	P	1	S	C	P EA	1			
3	0018	321502400 RES,FXD,FILM 3.32K R510	A	2E	P	1	S	C	P EA	1			
3	0019	321502600 RES,FXD,FILM 4.75K R506	A	2E	P	1	S	C	P EA	1			
3	0028	321502700 RES,FXD,FILM 5.62K R507	A	2E	P	1	S	C	P EA	2			
3	0020	321502800 RES,FXD,FILM 6.81K R511	A	2E	P	1	S	C	P EA	1			
3	0027	321502900 RES,FXD,FILM 8.25K R24,27	A	2E	P	1	S	C	P EA	2			
3	0021	321503000 RES,FXD,FILM 10K R501	A	2E	P	1	S	B	P EA	1			30
3	0022	321503100 RES,FXD,FILM 12.1K R503	A	2E	P	1	S	C	P EA	1			
3	0026	321503200 RES,FXD,FILM 15K R25	A	2E	P	1	S	C	P EA	1			
3	0023	321503600 RES,FXD,FILM	A	2E	P	1	S	C	P EA	2			

PRINTED 1[illegible]un-91 02:13 PM [illegible]TV PRODUCTS BM[illegible] VERSI

EFFECTIVITY DATE: ALL

I N D E N T E D B I L L S O F M A T E R I A L

PARENT PART: 671024103 YIG OSC INTERFACE;;388-9641 UM: EA PC: 2E ECN:
ERC: SRCE CODE: A TYPE: 1 ABC: B PL: P DATE: 00-

LEVEL	ITEM NO	COMPONENT PART NUMBER/ PART DESCRIPTION	ERC	PRODUCT CODE	S C	T Y	S P	A B	P L	UM	EXTENDED QTY PER	ECN CHG	START DATE	S/N
3	0024	321504300 RES,FXD,FILM	33.2K R13,26 A	25	P	1	N	C	P	EA	2			
3	0025	388964102 YIG OSC INTERFACE	47.5 OHM R20,512 B	2E	R	1	S	C	P	EA	1			

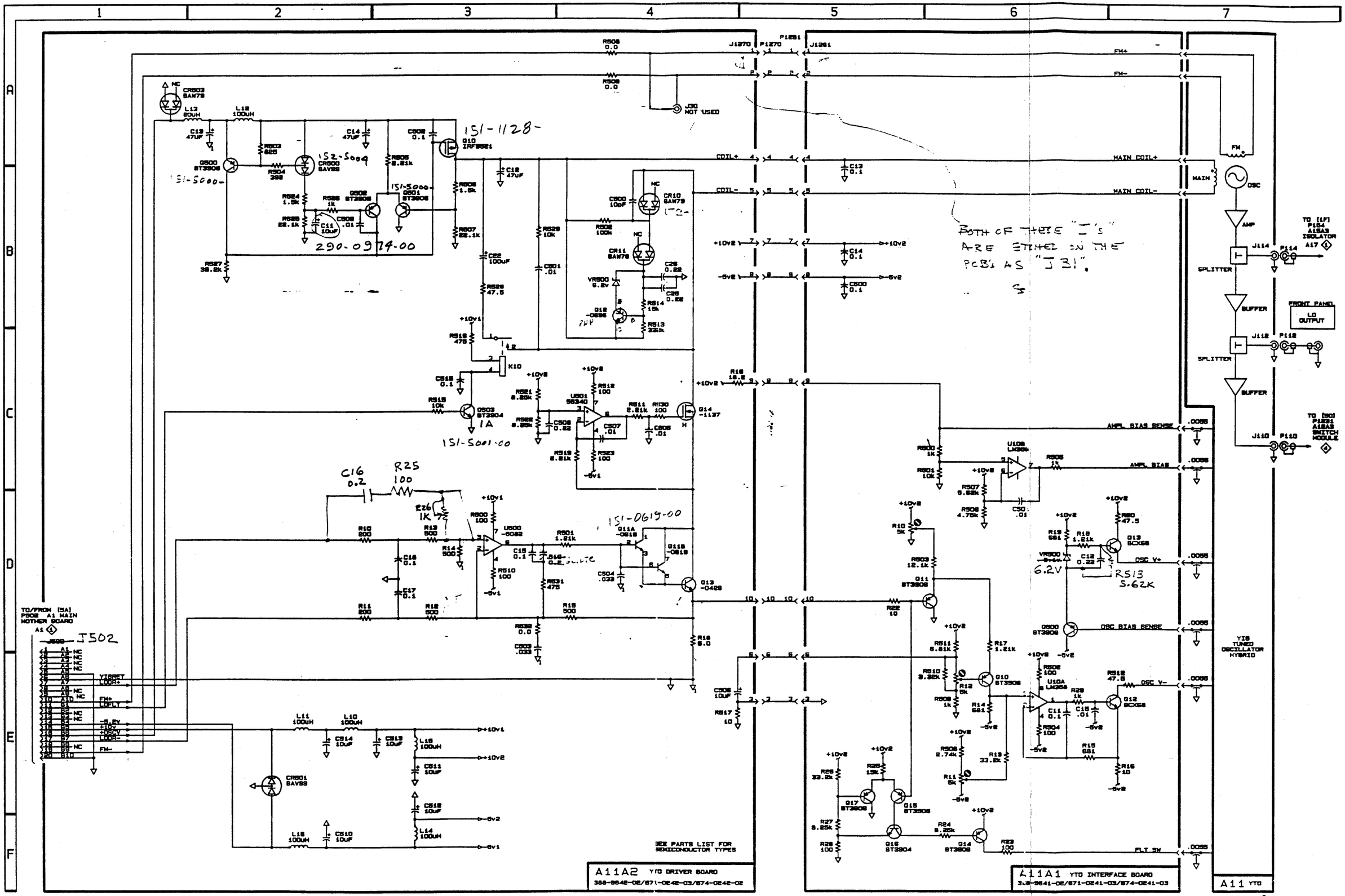
A11A2 YTO DRIVER BOARD
A11A1 YTO INTERFACE BOARD
A11 YTO
YTO DRIVER/YTO INTERFACE
A11 1
2782
H-9642-03 REV. FEB 10, 1992
SEE PARTS LIST FOR SEMICONDUCTOR TYPES
151-1128-
152-5009
151-5000-
290-0974-00
151-5001-00
151-0619-00
J30 NOT USED
BOTH OF THESE "J"S ARE STENCIL ON THE PCB'S AS "J31".
J502
TO/FROM [5A] P502 A1 MAIN MOTHER BOARD
TO [1F] P154 A15A3 ISOLATOR A17
TO [9D] P1231 A15A3 SWITCH MODULE
FRONT PANEL LO OUTPUT
YIG TUNED OSCILLATOR HYBRID
FM+
FM-
MAIN COIL+
MAIN COIL-
COIL+
COIL-
AMPL BIAS SENSE
AMPL BIAS
OSC V+
OSC BIAS SENSE
OSC V-
FLT SW
YIGRET
LOOR+
LOFLT
LOOR-
6.2V
R513 5.62K
C16 0.2
R25 100
R26 1K

DRAWING

YTO
M-9642-03
LAST_MODIFIED=Fri Apr 2 13:54:24 1993

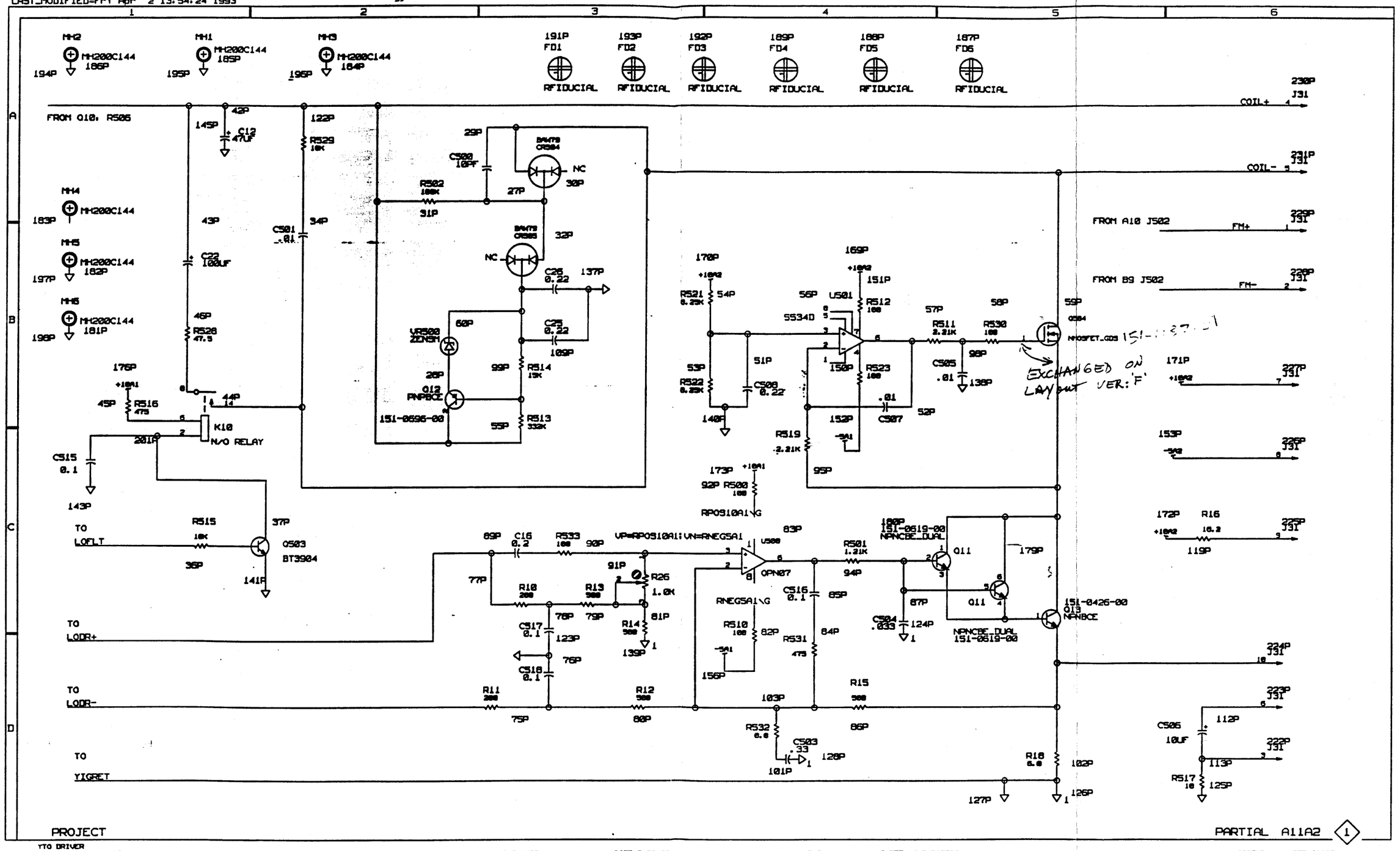

YTO DRIVER
PROJECT=YTO DRIVER ENGINEER=JOHN ROSS PHONE:1436 DATE:3-30-93 SHEET:1 OF 2 SHEET_NAME:PARTIAL ASSEMBLY_NUMBER:A11A2

DRAWING

TITLE=H-9642-03

ABBREV=YTO

LAST_MODIFIED=Thu Apr 1 14:38:34 1993

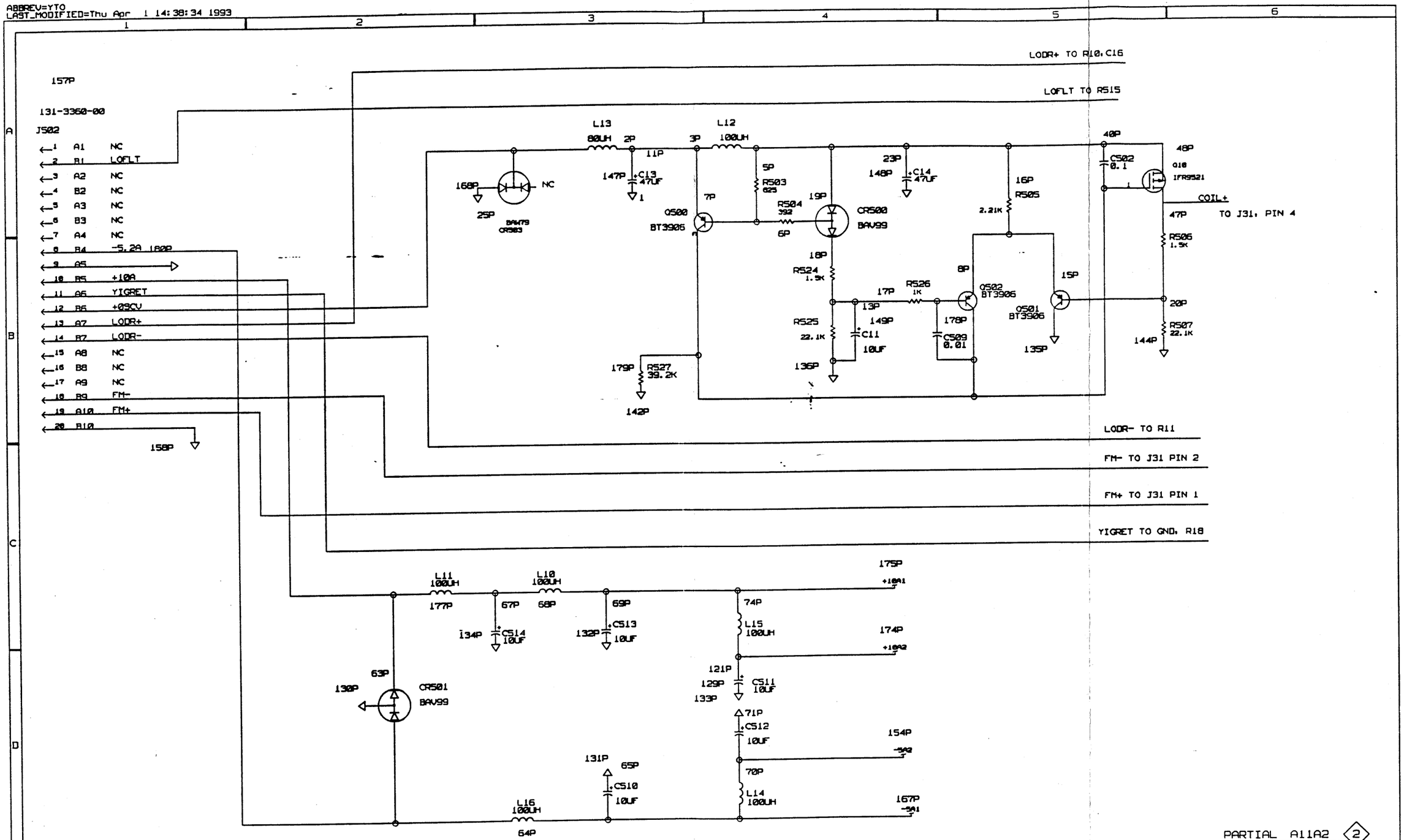

PROJECT 278X

YTO DRIVER
PROJECT=278X

JOHN ROSS

PHONE:1436

DATE:3-30-93

SHEET=2 OF 2

SHEET_NAME

PARTIAL A11A2 2

ASSEMBLY_NUMBER:A11A2

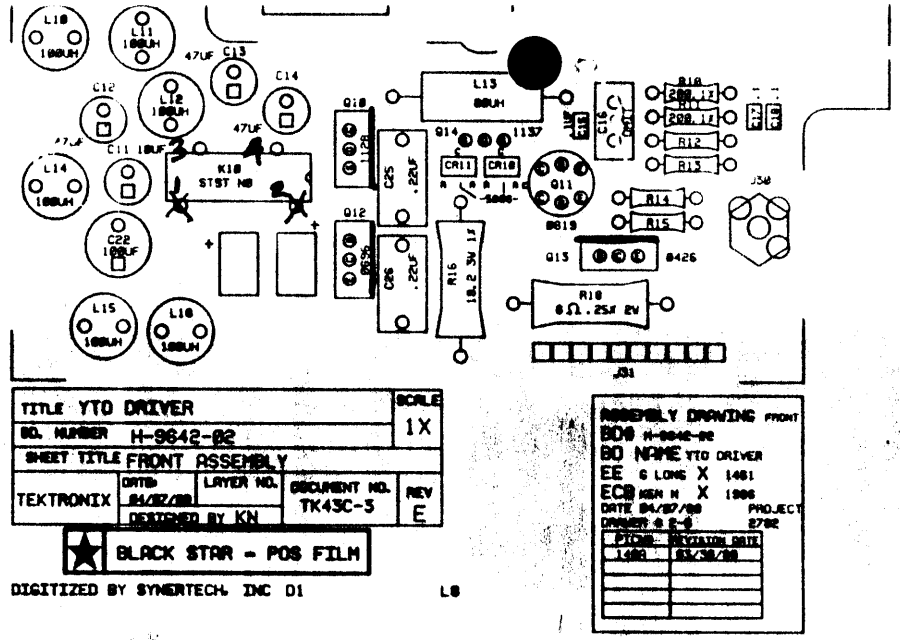

TITLE YTO DRIVER		SCALE 1X
BD. NUMBER H-9642-02		
SHEET TITLE FRONT ASSEMBLY		
TEKTRONIX	DATE 84/07/09 LAYER NO. DESIGNED BY KN	DOCUMENT NO. TK43C-3 REV E

BLACK STAR - POS FILM

DIGITIZED BY SYNERTECH INC D1 L8

ASSEMBLY DRAWING FRONT
BD# H-9642-02
BD NAME YTO DRIVER
EE G LONG X 1461
ECO KEN N X 1906
DATE 84/07/09 PROJECT
DRAWER 0 2-0 2702

PTCHG	REVISION DATE
1480	05/30/09

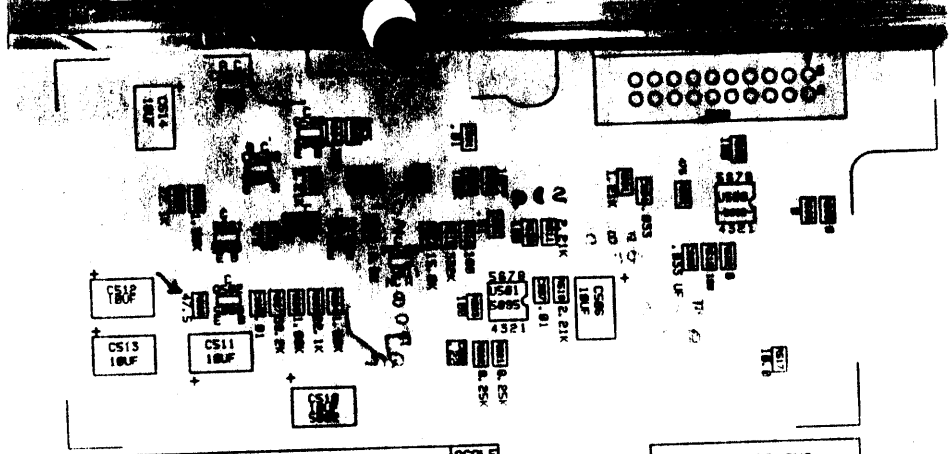

TITLE YTO DRIVER				SCALE 1X
BD. NUMBER H-9642-02				
SHEET TITLE REAR ASSEMBLY(FRONT VIEW)				
TEKTRONIX	DATE: 04/07/89	LAYER NO.	DOCUMENT NO. TK43C-3	REV E
	DESIGNED BY KN			

BLACK STAR - POS FILM

DIGITIZED BY SYNERTECH, INC 01 L6

ASSEMBLY DRAWING REAR
BD# H-9642-02
BD NAME YTO DRIVER
EE G LONG X 1461
ECB KEN N X 1986
DATE 04/07/89 PROJECT
DRAWER # 2-6 2782

PICN#	REVISION DATE
148A	03/30/89

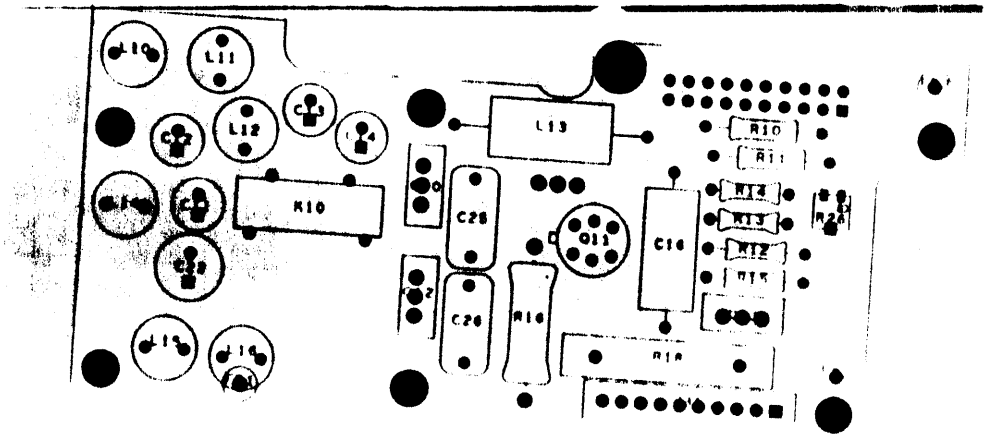
L10
L11
L12
C3
C4
C7
C8
C9
L13
L14
L15
L16
R10
C25
C26
R14
Q11
C16
R10
R11
R14
R13
R12
R15
R2
R16

H-9642-03 DB-1 4-1-93

1:1 SCALE

HA 9642-03 DF G 7 9 93

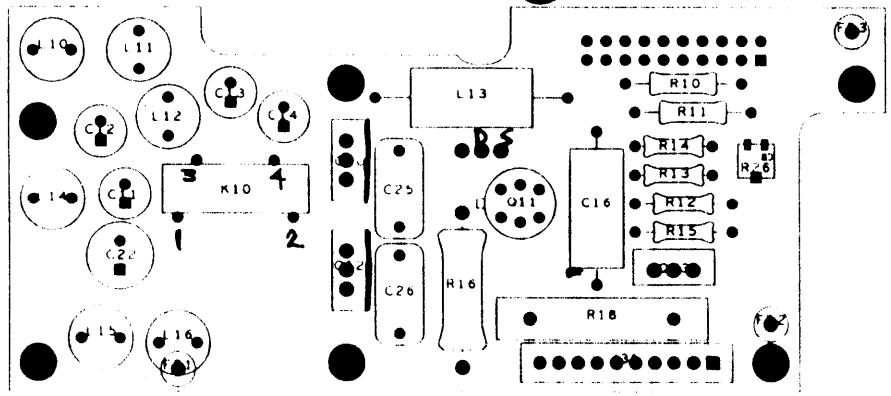

HA-9642-03 DB-G 7-9-93

PRINTED Jun-91 02:13 PM TV PRODUCTS L VERS

EFFECTIVITY DATE: ALL

INDENTED BILLS OF MATERIAL

PARENT PART: 671024203 YTO DRIVER;;388-9642-XX WIR UM: EA PC: 2E ECN:
ERC: SRCE CODE: A TYPE: 1 ABC: A PL: P DATE: OC

LEVEL	ITEM NO	COMPONENT PART NUMBER/ PART DESCRIPTION	ERC	PRODUCT CODE	STSCP	TYP	SNB	APC	PL	UM	EXTENDED QTY PER	ECN CHG	DATE	START S/
2	0019	108042200 COIL, RF	C 80UH L13	25	P	1	N	C	P	EA	1			
2	0020	108126200 COIL, RF	100UH L10, 11, 12, 14, 15, 16	25	P	1	N	B	P	EA	6			
2	0018	131060800 TERMINAL, PIN	E J31	25	P	1	S	A	P	EA	10			
2	0017	131336000 CONN, HDR:	B 2X10	25	P	1	N	C	P	EA	1			
2	0015	148007600 RELAY, REED	D K10	25	P	1	N	B	P	EA	1			
2	0025	151042600 TRANSISTOR	G Q13	2E	P	1	N	C	P	EA	1			
2	0024	151061900 TRANSISTOR, SIG	E LM394 Q11	25	P	1	S	B	P	EA	1			
2	0026	151069600 TRANSISTOR, PWR	D Q12	2E	P	1	S	C	P	EA	1			
2	0022	151112800 TRANSISTOR, PWR	C IRF9521 Q10	2E	P	1	S	B	P	EA	1			
2	0004	151113701 TRANSISTOR, PWR	R IRF630 Q14	2E	P	1	S	C	P	EA	1			
2	0009	283020800 CAP, FXD, CER DI	G .22UF 200V C25, 26	25	P	1	S	C	P	EA	2			
2	0008	285107600 CAP, FXD, PLASTIC	A .2UF C16	2E	P	1	S	C	P	EA	1			
2	0001	290094300 CAP, FXD, ELCTLT	D 47UF 25V C12, 13, 14	25	P	1	S	C	P	EA	3			
2	0035	290097300	A	25	P	1	S	C	P	EA	1			

J50z

EFFECTIVITY DATE: ALL

INDENTED BILLS OF MATERIAL

PARENT PART: 671024203 YTO DRIVER, 388-9642-XX WIR UM: EA PC: 2E ECN:
ERC: SRCE CODE: A TYPE: 1 ABC: A PL: P DATE:

LEVEL	ITEM NO	COMPONENT PART NUMBER / PART DESCRIPTION	ERC	PRODUCT CODE	S C	T Y	S P	A B	P L	UM	EXTENDED QTY PER	ECN CHG	START DATE
		CAP, FXD, ELCTLT	100 UF C22										
2	0003	290097400 CAP, FXD, ELCTLT	A	25	P	1	S	C	P	EA	1		
			10UF 50V C11										
2	0002	308034400 RES, FXD, WW	F	25	P	1	N	C	P	EA	1		
			18.2 3W 1% R16										
2	0005	310051600 RES, FXD, FILM		2E	P	1	S	C	P	EA	1		
			6 OHM MICA R18										
2	0010	311223100 RES, VAR, NONWW	F	25	P	1	S	C	P	EA	1		
			1K R26										
2	0034	321012607 RES, FXD, FILM	A	2E	P	1	S	C	P	EA	2		
			200 OHM 1% R10, 11										
2	0036	321061207 RES, FXD, FILM	A	25	P	1	S	C	P	EA	4		
			500 OHM 1% R12, 13, 14, 15										
2	0007	322309700 RES, FXD, FILM		25	P	1	S	B	P	EA	1		
			100OHM R25										
2	0006	674024202 388-9642-XX MACH INSERTED		2E	A	1		B	P	EA	1		
			YTO DRIVER										
3	0021	151500000 TRANSISTOR, SIG	B	2E	P	1	S	B	P	EA	3		
			3906 Q500, 501, 502										
3	0023	151500100 TRANSISTOR, SIG	B	2E	P	1	S	B	P	EA	1		
			3904 Q503										
3	0012	152500400 DIODE, SIG	A	2E	P	1	S	B	P	EA	2		
			BAV99 CR500, 501										
3	0014	152500800 DIODE, RECT	*	2E	P	1	S	B	P	EA	3		
			BAW79 CR10, 11, 503										

PRINTED 1[illegible]Jun-91 02:13 PM [illegible] TV PRODUCTS B[illegible] VERS

EFFECTIVITY DATE: ALL

I N D E N T E D B I L L S O F M A T E R I A L

PARENT PART: 671024203 YTO DRIVER;;388-9642-XX WIR UM: EA PC: 2E ECN:
ERC: SRCE CODE: A TYPE: 1 ABC: A PL: P DATE: 00

LEVEL	ITEM NO	COMPONENT PART NUMBER/ PART DESCRIPTION	ERC	PRODUCT CODE	S C	T Y	S P	A B	P L	UM	EXTENDED QTY PER	ECN CHG	DATE	START	S/
3	0013	152501100 DIODE,SIG		2E	P	1	S	C	P	EA	1				
			BZ5234 6.2V VR500												
3	0054	156508201 IC,LINEAR	*	2E	P	1	S	A	P	EA	1				
			OP-07 U500												
3	0055	156509501 IC,LINEAR	*	2E	P	1	S	B	P	EA	1				
			NE5534 U501												
3	0010	283500000 CAP,FXD,CER DI	*	2E	P	1	S	C	P	EA	1				
			10PF C500												
3	0004	283500300 CAP,FXD,CER DI	*	2E	P	1	S	B	P	EA	4				PIC
			.01UF C501,505,507,509												
3	0002	283500400 CAP,FXD,CER DI		2E	P	1	S	A	P	EA	5				PIC
			.1UF C15,17,18,502,515												
3	0011	283501000 CAP,FXD,CER DI	A	2E	P	1	S	B	P	EA	1				
			.22UF C508												
3	0008	283501800 CAP,FXD,CER DI		2E	P	1	S	C	P	EA	2				
			.033UF C503,504												
3	0005	290500200 CAP,FXD,ELCTLT		2E	P	1	S	A	P	EA	6				
			10UF 16V TANT C506,510,511,512,513 C514												
3	0052	321500000 RES,FXD,FILM	C	2E	P	1	S	B	P	EA	1				
			10 OHM R517												
3	0048	321500600 RES,FXD,FILM	B	2E	P	1	S	C	P	EA	5				
			100 OHM R500,510,512,523,530												
3	0034	321501300 RES,FXD,FILM	B	2E	P	1	S	C	P	EA	1				
			392 OHM R504												
3	0038	321501400	B	2E	P	1	S	C	P	EA	2				PIC

PRINTED -Jun-91 02:13 PM TV PRODUCTS IL VER

EFFECTIVITY DATE: ALL

I N D E N T E D B I L L S O F M A T E R I A L

PARENT PART: 671024203 YTO DRIVER;;388-9642-XX WIR UM: EA PC: 2E ECN:
ERC: SRCE CODE: A TYPE: 1 ABC: A PL: P DATE: C

LEVEL	ITEM NO	COMPONENT PART NUMBER/ PART DESCRIPTION	ERC	PRODUCT CODE	S C	T Y	S P	A B	P L	UM	EXTENDED QTY PER	ECN CHG	DATE	START	S
		RES,FXD,FILM													
			475 OHM R516,531												
3	0033	321501700	A	2E	P	1	S	C	P	EA	1				
		RES,FXD,FILM													
			825 OHM R503												
3	0031	321501800	A	2E	P	1	S	B	P	EA	1				
		RES,FXD,FILM													
			1K R526												
3	0039	321501900	A	2E	P	1	S	C	P	EA	1				
		RES,FXD,FILM													
			1.21K R501												
3	0028	321502000	A	2E	P	1	S	C	P	EA	2				
		RES,FXD,FILM													
			1.5K R506,524												
3	0029	321502200	A	2E	P	1	S	C	P	EA	3				
		RES,FXD,FILM													
			2.21K R505,511,519												
3	0046	321502900	A	2E	P	1	S	C	P	EA	2				
		RES,FXD,FILM													
			8.25K R521,522												
3	0035	321503000	A	2E	P	1	S	B	P	EA	2				PI
		RES,FXD,FILM													
			10K R515,529												
3	0042	321503200	A	2E	P	1	S	C	P	EA	1				
		RES,FXD,FILM													
			15K R514												
3	0030	321503400	A	2E	P	1	S	C	P	EA	2				
		RES,FXD,FILM													
			22.1K R507,525												
3	0032	321503700	A	2E	P	1	S	C	P	EA	1				
		RES,FXD,FILM													
			39.2K R527												
3	0037	321504300	A	25	P	1	N	C	P	EA	1				
		RES,FXD,FILM													
			47.5 OHM R528												
3	0044	321504700	A	2E	P	1	S	C	P	EA	1				
		RES,FXD,FILM													
			100K												

PRINTED 19[illegible]n-91 02:13 PM [illegible]TV PRODUCTS BM[illegible] VERSI

EFFECTIVITY DATE: ALL

I N D E N T E D B I L L S O F M A T E R I A L

PARENT PART: 671024203 YTO DRIVER,,388-9642-XX WIR UM: EA PC: 2E ECN:
ERC: SRCE CODE: A TYPE: 1 ABC: A PL: P DATE: 00-

LEVEL	ITEM NO	COMPONENT PART NUMBER/ PART DESCRIPTION	ERC	PRODUCT CODE	S C	T Y	S P	A B	P L	UM	EXTENDED QTY PER	ECN CHG	START DATE	S/N
3	0043	321504800 RES,FXD,FILM	R502 A 332K	2E	P	1	S	C	P	EA	1			
3	0053	321505100 RES,FXD,FILM	R513 * 0 OHM	2E	P	1	S	C	P	EA	3			PICN
3	0085	388964202 YIG OSC DRIVER	R508,509,532 C YTO DRIVER	2E	R	1	S	C	P	EA	1			3224

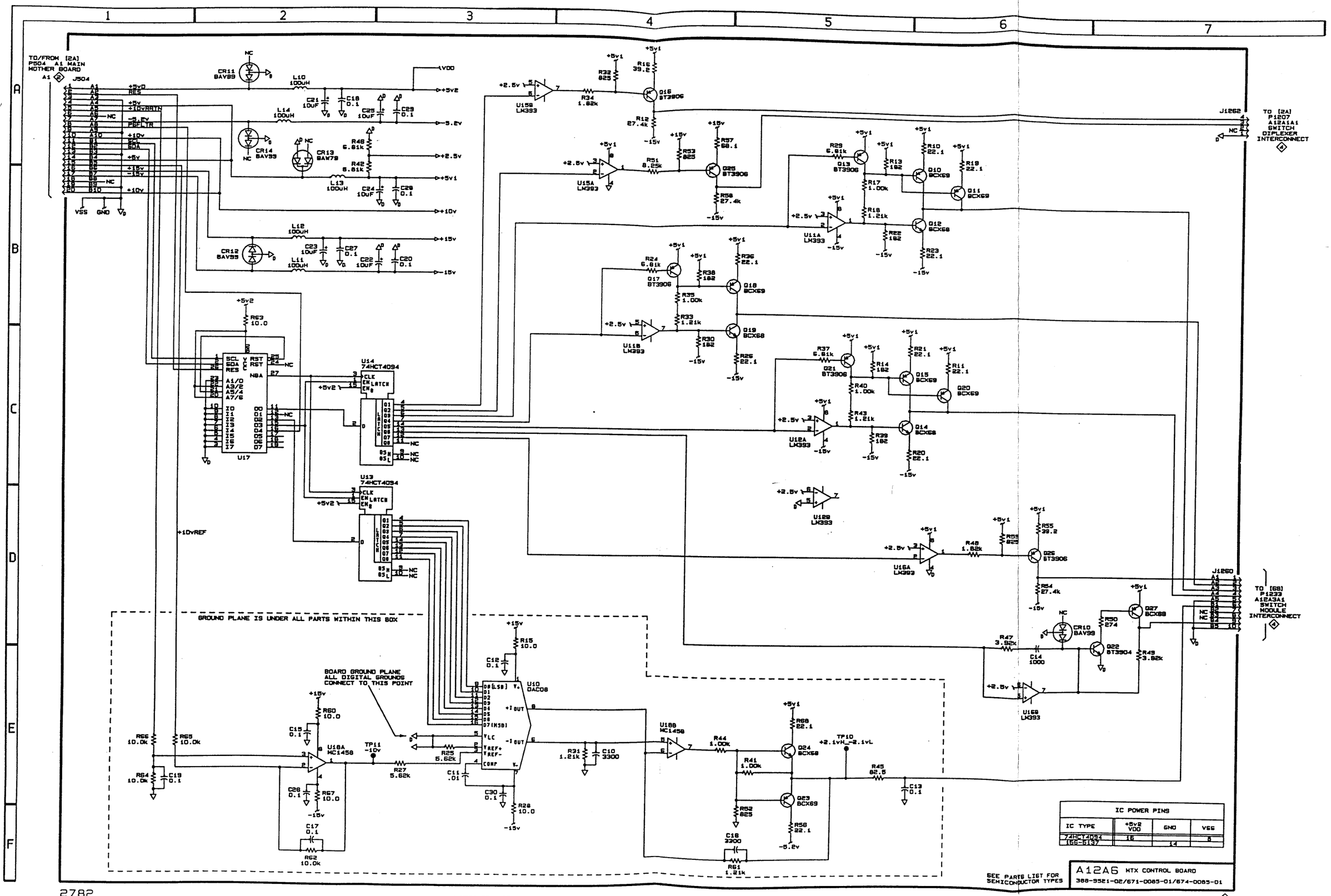
TO/FROM [2A] P504 A1 MAIN MOTHER BOARD
J504
J1262
TO [2A] P1207 A12A1A1 SWITCH DIPLEXER INTERCONNECT
J1260
TO [6B] P1332 A12A3A1 SWITCH MODULE INTERCONNECT
GROUND PLANE IS UNDER ALL PARTS WITHIN THIS BOX
BOARD GROUND PLANE ALL DIGITAL GROUNDS CONNECT TO THIS POINT
U17
U14 74HCT4094
U13 74HCT4094
U10 DAC08
U18A MC1458
U18B MC1458
U15B LM393
U15A LM393
U11B LM393
U11A LM393
U12B LM393
U12A LM393
U16A LM393
U16B LM393
+10vREF
IC POWER PINS
IC TYPE | +5v2 VDD | GND | VSS
74HCT4094 | 16 | 14 | 8
166-5137
SEE PARTS LIST FOR SEMICONDUCTOR TYPES
A12A6 MTX CONTROL BOARD
388-9521-02/671-0085-01/674-0085-01
2782
HA-9521-02 REV. FEB 13, 1992
MTX CONTROL A12A6 1

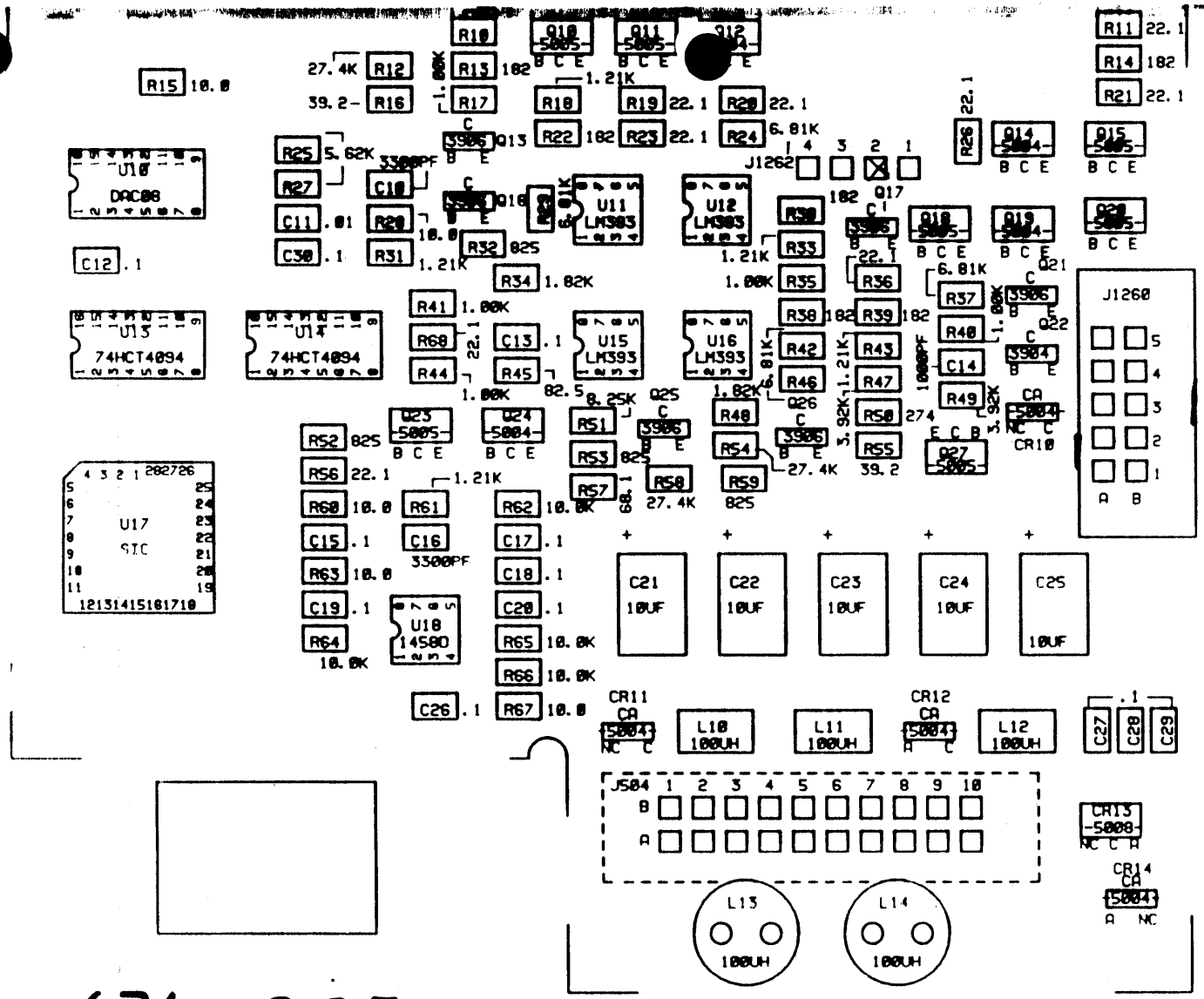

671-0085-00

TITLE MTX CONTROL				SCALE 2X
BD. NUMBER H-9521-01				
SHEET TITLE FRONT ASSEMBLY				
TEKTRONIX	DATE: 08/04/88	LAYER NO.	DOCUMENT NO. TK69C-1 D. CASTRAPEL	REV D
	DESIGNED BY RD			

BLACK STAR - POS FILM

ASSEMBLY DRAWING FRONT ONLY
BD# H-9521-01
BD NAME MTX CONTROL
EE MATT KAMNA X 4274
ECB RUTH D X 2319
DATE 08/04/88 PROJECT
DRAWER # 1-8 2782

E C B	REVISION DATE

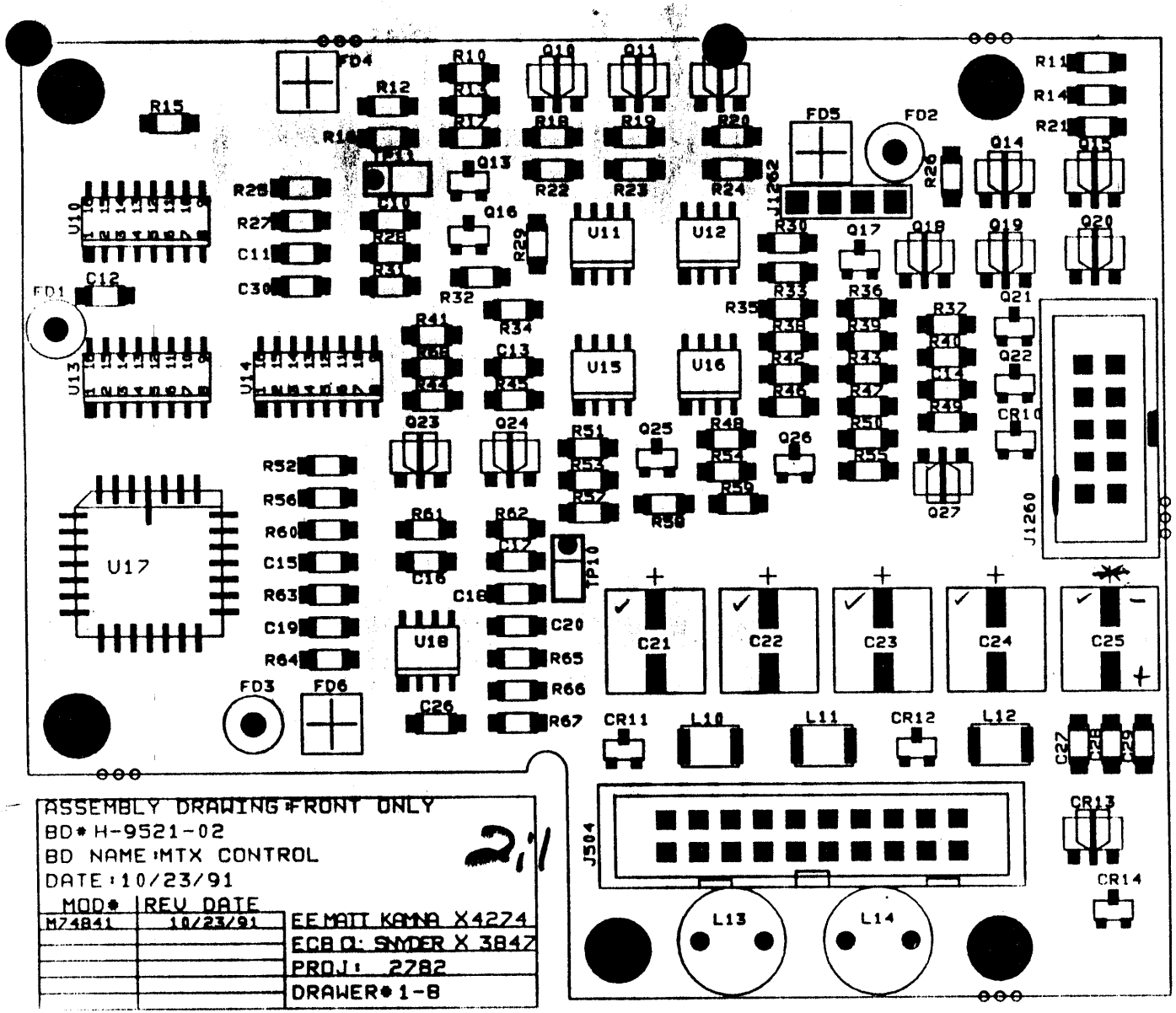

ASSEMBLY DRAWING FRONT ONLY
BD# H-9521-02
BD NAME: MTX CONTROL
DATE: 10/23/91

2:1

MOD#	REV DATE
M74841	10/23/91

EE MATT KAMNA X4274
ECB O: SNYDER X 3847
PROJ: 2782
DRAWER# 1-8

C25 POLARITY MARKED WRONG ON BOARD

VER "E"

EFFECTIVITY DATE: ALL

INDENTED BILLS OF MATERIAL

PARENT PART: 671008501 MIX CONTROL 388-9521-XX UM: EA PC: 2E ECN:
ERC: SRCE CODE: A TYPE: 1 ABC: B PL: P DATE: 00-

LEVEL	ITEM NO	COMPONENT PART NUMBER/ PART DESCRIPTION	ERC	PRODUCT CODE	S C	T Y	S P	A B	P L	UM	EXTENDED QTY PER	ECN CHG	START DATE	S/N
2	0005	108126200 COIL,RF		25	P	1	N	B	P	EA	2			
			100UH L13,14											
2	0042	131291900 CONN,HDR	A	2E	P	1	S	C	P	EA	1			
			1X4 .100 CTRS R ANGLE J1262											
2	0039	131336000 CONN,HDR:	B	25	P	1	N	C	P	EA	1			
			2X10 STRAIGHT J504											
2	0030	131371800 CONN,HDR		2E	P	1	S	C	P	EA	1			
			J1260											
2	0008	674008501 388-9521-XX MACH INSERTED		2E	A	1		B	P	EA	1			210A
3	0006	108501500 COIL,RF		2E	P	1	S	C	P	EA	3			
			100UH L10,11,12											
3	0008	151500000 TRANSISTOR,SIG	B	2E	P	1	S	B	P	EA	6			
			3906 Q13,16,17,21,25,26											
3	0007	151500100 TRANSISTOR,SIG	B	2E	P	1	S	B	P	EA	1			
			3904 Q22											
3	0009	151500400 TRANSISTOR,SIG	*	2E	P	1	S	B	P	EA	4			
			BCX68 Q12,14,19,24											
3	0010	151500500 TRANSISTOR,SIG	B	2E	P	1	S	B	P	EA	7			
			BCX69 Q10,11,15,18,20,23 Q27											
3	0004	152500400 DIODE,SIG	A	2E	P	1	S	B	P	EA	4			
			BAV99 CR10,11,12,14											
3	0042	152500800 DIODE,RECT	*	2E	P	1	S	B	P	EA	1			
			CR13											
3	0310	156501701 IC,LINEAR	*	2E	P	1	S	C	P	EA	1			
			1458D											

EFFECTIVITY DATE: ALL

INDENTED BILLS OF MATERIAL

PARENT PART: 671008501 MIX CONTROL 388-9521-XX UM: EA PC: 2E ECN:
ERC: SRCE CODE: A TYPE: 1 ABC: B PL: P DATE: 0(

LEVEL	ITEM NO	COMPONENT PART NUMBER/ PART DESCRIPTION	ERC	PRODUCT CODE	S C	T Y	S P	A B	P L	UM	EXTENDED QTY PER	ECN CHG	START DATE	S/
3	0044	156501900 IC,LINEAR	U18 A	2E	P	1	S	C	P	EA	4			
3	0311	156504301 IC,CONVERTER	LM393 U11,12,15,16 A	2E	P	1	S	B	P	EA	1			
3	0034	156513700 MICROCKT,DGTL	DAC08 U10 *	2E	P	1	S	B	P	EA	1			
3	0033	156525400 IC,DIGITAL	SIC U17 *	2E	P	1	S	B	P	EA	2			
3	0045	283500200 CAP,FXD,CER DI	74HCT4094 U13,14 *	2E	P	1	S	B	P	EA	1			
3	0001	283500300 CAP,FXD,CER DI	1000PF C14 *	2E	P	1	S	B	P	EA	1			
3	0002	283500400 CAP,FXD,CER DI	.01UF C11	2E	P	1	S	A	P	EA	12			
3	0046	283501500 CAP,FXD,CER DI	.1UF C12,13,15,17,18,19 C20,26,27,28,29,30	2E	P	1	S	C	P	EA	2			
3	0003	290500100 CAP,FXD,ELCTLT	3300PF C10,16 B	2E	P	3	S	B	P	EA	5			
3	0011	321500000 RES,FXD,FILM	10UF 16V C21,22,23,24,25 C	2E	P	1	S	B	P	EA	5			
3	0012	321500400 RES,FXD,FILM	10 OHM R15,28,60,63,67 B	2E	P	1	S	C	P	EA	10			
3	0017	321500900 RES,FXD,FILM	22.1 OHM R10,11,19,20,21,23 R26,36,56,68 B	2E	P	1	S	C	P	EA	6			
			182 OHM											

FECTIVITY DATE: ALL

INDENTED BILLS OF MATERIAL

RENT PART: 671008501 MIX CONTROL 388-9521-XX UM: EA PC: 2E ECN:
ERC: SRCE CODE: A TYPE: 1 ABC: B PL: P DATE: 00-X)

VEL	ITEM NO	COMPONENT PART NUMBER / PART DESCRIPTION	ERC	PRODUCT CODE	S C	T Y	S P	A B	P L	UM	EXTENDED QTY PER	ECN CHG	START DATE	S/N
	0054	321501100 RES,FXD,FILM	R13,14,22,30,38,39 B	2E	P	1	S	C	P	EA	1			
	0020	321501700 RES,FXD,FILM	274 OHM R50 A	2E	P	1	S	C	P	EA	4			
	0021	321501800 RES,FXD,FILM	825 OHM R32,52,53,59 A	2E	P	1	S	B	P	EA	5			
	0049	321501900 RES,FXD,FILM	1.00K R17,35,40,41,44 A	2E	P	1	S	C	P	EA	5			
	0050	321502100 RES,FXD,FILM	1.21K R18,31,33,43,61 A	2E	P	1	S	C	P	EA	2			
	0024	321502500 RES,FXD,FILM	1.82K R34,48 A	2E	P	1	S	C	P	EA	2			
	0047	321502700 RES,FXD,FILM	3.92K R47,49 A	2E	P	1	S	C	P	EA	2			
	0026	321502800 RES,FXD,FILM	5.62K R25,27 A	2E	P	1	S	C	P	EA	5			
	0052	321502900 RES,FXD,FILM	6.81K R24,29,37,42,46 A	2E	P	1	S	C	P	EA	1			
	0051	321503000 RES,FXD,FILM	8.25K R51 A	2E	P	1	S	B	P	EA	4			
	0028	321503500 RES,FXD,FILM	10.0K R62,64,65,66 A	2E	P	1	S	C	P	EA	3			
	0048	321504200 RES,FXD,FILM	27.4K R12,54,58 A	2E	P	1	S	C	P	EA	2			
	0053	321504500	39.2 OHM R16,55 A	2E	P	1	S	C	P	EA	1			

EFFECTIVITY DATE: ALL

INDENTED BILLS OF MATERIAL

PARENT PART: 671008501 MIX CONTROL 388-9521-XX UM: EA PC: 2E ECN:
ERC: SRCE CODE: A TYPE: 1 ABC: B PL: P DATE: 00

LEVEL	ITEM NO	COMPONENT PART NUMBER/ PART DESCRIPTION	ERC	PRODUCT CODE	S C	T Y	S P	A B	P L	UM	EXTENDED QTY PER	ECN CHG	DATE	START S/
		RES,FXD,FILM												
		68.1 OHM												
		R57												
3	0015	321504600	A	2E	P	1	S	C	P	EA	1			
		RES,FXD,FILM												
		82.5 OHM												
		R45												
3	0041	388952101	F	2E	R	1	S	C	P	EA	1			322
		MIX CONTROL												
		MTX CONTROL												

Component No.	Tektronix Part No.	Serial/Assembly No. Effective	Discont	Name & Description	Mfr. Code	Mfr. Part No.
A12A6	671-0085-01			CIRCUIT BD ASSY:MIX CONTROL	80009	671-0085-01
A12A6C10	283-5015-00			CAP,FXD,CER DI:3300PF,10%,50V	54583	
A12A6C11	283-5003-00			CAP,FXD,CER DI:0.01UF,10%,50V	80009	283-5003-00
A12A6C12	283-5004-00			CAP,FXD,CER DI:0.1UF,10%,25V	80009	283-5004-00
A12A6C13	283-5004-00			CAP,FXD,CER DI:0.1UF,10%,25V	80009	283-5004-00
A12A6C14	283-5002-00			CAP,FXD,CER DI:1000PF,10%,50V	80009	283-5002-00
A12A6C15	283-5004-00			CAP,FXD,CER DI:0.1UF,10%,25V	80009	283-5004-00
A12A6C16	283-5015-00			CAP,FXD,CER DI:3300PF,10%,50V	54583	
A12A6C17	283-5004-00			CAP,FXD,CER DI:0.1UF,10%,25V	80009	283-5004-00
A12A6C18	283-5004-00			CAP,FXD,CER DI:0.1UF,10%,25V	80009	283-5004-00
A12A6C19	283-5004-00			CAP,FXD,CER DI:0.1UF,10%,25V	80009	283-5004-00
A12A6C20	283-5004-00			CAP,FXD,CER DI:0.1UF,10%,25V	80009	283-5004-00
A12A6C21	290-5001-00			CAP,FXD,ELCTLT:10UF,20%,16V	TK0900	ALCHIP-S16V10UF
A12A6C22	290-5001-00			CAP,FXD,ELCTLT:10UF,20%,16V	TK0900	ALCHIP-S16V10UF
A12A6C23	290-5001-00			CAP,FXD,ELCTLT:10UF,20%,16V	TK0900	ALCHIP-S16V10UF
A12A6C24	290-5001-00			CAP,FXD,ELCTLT:10UF,20%,16V	TK0900	ALCHIP-S16V10UF
A12A6C25	290-5001-00			CAP,FXD,ELCTLT:10UF,20%,16V	TK0900	ALCHIP-S16V10UF
A12A6C26	283-5004-00			CAP,FXD,CER DI:0.1UF,10%,25V	80009	283-5004-00
A12A6C27	283-5004-00			CAP,FXD,CER DI:0.1UF,10%,25V	80009	283-5004-00
A12A6C28	283-5004-00			CAP,FXD,CER DI:0.1UF,10%,25V	80009	283-5004-00
A12A6C29	283-5004-00			CAP,FXD,CER DI:0.1UF,10%,25V	80009	283-5004-00
A12A6C30	283-5004-00			CAP,FXD,CER DI:0.1UF,10%,25V	80009	283-5004-00
A12A6CR10	152-5004-00			DIODE,SIG:,ULTRA FAST;70V,0.15A,6NS,SER-PAIR;BAV99,SOT-23,8MM TR	25088	BAV99T
A12A6CR11	152-5004-00			DIODE,SIG:,ULTRA FAST;70V,0.15A,6NS,SER-PAIR;BAV99,SOT-23,8MM TR	25088	BAV99T
A12A6CR12	152-5004-00			DIODE,SIG:,ULTRA FAST;70V,0.15A,6NS,SER-PAIR;BAV99,SOT-23,8MM TR	25088	BAV99T
A12A6CR13	152-5008-00			DIODE,RECT:,;400V,1A,MONOLITHIC COM-CATH;BAW79D,SOT-89,12MM TR	80009	152-5008-00

Component No.	Tektronix Part No.	Serial/Assembly No. Effective	Dscont	Name & Description	Mfr. Code	Mfr. Part No.
A12A6CR14	152-5004-00			DIODE,SIG:,ULTRA FAST;70V,0.15A,6NS,SER-PAIR;BAV99,SOT-23,8MM TR	25088	BAV99T
A12A6J504	131-3360-00			CONN,HDR::	80009	131-3360-00
A12A6J1260	131-3718-00			CONN,HDR::	80009	131-3718-00
A12A6J1262	131-2919-00			CONN,HDR:PCB,:MALE,RTANG,1 X 4,0.1 CTR,0.318*MLG X 0.110 TAIL,30 GOLD,0.035 DIA PCB;,,	80009	131-2919-00
A12A6L10	108-5015-00			COIL,RF:FXD,100UH,10%,Q 40,SRF 8.0 MHZ,DCR 8 OHM, I MAX 110 MASMD, 12 MM TAPED & REELED	80009	108-5015-00
A12A6L11	108-5015-00			COIL,RF:FXD,100UH,10%,Q 40,SRF 8.0 MHZ,DCR 8 OHM, I MAX 110 MASMD, 12 MM TAPED & REELED	80009	108-5015-00
A12A6L12	108-5015-00			COIL,RF:FXD,100UH,10%,Q 40,SRF 8.0 MHZ,DCR 8 OHM, I MAX 110 MASMD, 12 MM TAPED & REELED	80009	108-5015-00
A12A6L13	108-1262-00			COIL,RF:FXD,100UH,10%,Q=30,SRF 8.2MHZ,DCR 0.23 OHM,I MAX 0.75ARADIAL LEAD	80009	108-1262-00
A12A6L14	108-1262-00			COIL,RF:FXD,100UH,10%,Q=30,SRF 8.2MHZ,DCR 0.23 OHM,I MAX 0.75ARADIAL LEAD	80009	108-1262-00
A12A6Q10	151-5005-00			TRANSISTOR,SIG:BIPOLAR,PNP;20V,1.0A,60MHZ,AMPLIFIER;BCX69/BC869,SOT-89,12MM T/R	04713	BCX69T1
A12A6Q11	151-5005-00			TRANSISTOR,SIG:BIPOLAR,PNP;20V,1.0A,60MHZ,AMPLIFIER;BCX69/BC869,SOT-89,12MM T/R	04713	BCX69T1
A12A6Q12	151-5004-00			TRANSISTOR,SIG:BIPOLAR,NPN;20V,1.0A,65MHZ,AMPLIFIER;BCX68/BC868,SOT-89,12MM T/R	04713	BCX68
A12A6Q13	151-5000-00			TRANSISTOR,SIG:BIPOLAR,PNP;40V,200MA,250MHZ,AMPLIFIER;MMBT3906L,TO-236/SOT-23,8MM T/R	04713	MMBT3906LT1
A12A6Q14	151-5004-00			TRANSISTOR,SIG:BIPOLAR,NPN;20V,1.0A,65MHZ,AMPLIFIER;BCX68/BC868,SOT-89,12MM T/R	04713	BCX68
A12A6Q15	151-5005-00			TRANSISTOR,SIG:BIPOLAR,PNP;20V,1.0A,60MHZ,AMPLIFIER;BCX69/BC869,SOT-89,12MM T/R	04713	BCX69T1
A12A6Q16	151-5000-00			TRANSISTOR,SIG:BIPOLAR,PNP;40V,200MA,250MHZ,AMPLIFIER;MMBT3906L,TO-236/SOT-23,8MM T/R	04713	MMBT3906LT1
A12A6Q17	151-5000-00			TRANSISTOR,SIG:BIPOLAR,PNP;40V,200MA,250MHZ,AMPLIFIER;MMBT3906L,TO-236/SOT-23,8MM T/R	04713	MMBT3906LT1
A12A6Q18	151-5005-00			TRANSISTOR,SIG:BIPOLAR,PNP;20V,1.0A,60MHZ,AMPLIFIER;BCX69/BC869,SOT-89,12MM T/R	04713	BCX69T1
A12A6Q19	151-5004-00			TRANSISTOR,SIG:BIPOLAR,NPN;20V,1.0A,65MHZ,AMPLIFIER;BCX68/BC868,SOT-89,12MM T/R	04713	BCX68
A12A6Q20	151-5005-00			TRANSISTOR,SIG:BIPOLAR,PNP;20V,1.0A,60MHZ,AMPLIFIER;BCX69/BC869,SOT-89,12MM T/R	04713	BCX69T1
A12A6Q21	151-5000-00			TRANSISTOR,SIG:BIPOLAR,PNP;40V,200MA,250MHZ,AMPLIFIER;MMBT3906L,TO-236/SOT-23,8MM T/R	04713	MMBT3906LT1
A12A6Q22	151-5001-00			TRANSISTOR,SIG:BIPOLAR,NPN;40V,200MA,300MHZ,AMPLIFIER;MMBT3904L,TO-236/SOT-23,8MM T/R	80009	151-5001-00
A12A6Q23	151-5005-00			TRANSISTOR,SIG:BIPOLAR,PNP;20V,1.0A,60MHZ,AMPLIFIER;BCX69/BC869,SOT-89,12MM T/R	04713	BCX69T1
A12A6Q24	151-5004-00			TRANSISTOR,SIG:BIPOLAR,NPN;20V,1.0A,65MHZ,AMPLIFIER;BCX68/BC868,SOT-89,12MM T/R	04713	BCX68
A12A6Q25	151-5000-00			TRANSISTOR,SIG:BIPOLAR,PNP;40V,200MA,250MHZ,AMPLIFIER;MMBT3906L,TO-236/SOT-23,8MM T/R	04713	MMBT3906LT1
A12A6Q26	151-5000-00			TRANSISTOR,SIG:BIPOLAR,PNP;40V,200MA,250MHZ,AMPLIFIER;MMBT3906L,TO-236/SOT-23,8MM T/R	04713	MMBT3906LT1
A12A6Q27	151-5005-00			TRANSISTOR,SIG:BIPOLAR,PNP;20V,1.0A,60MHZ,AMPLIFIER;BCX69/BC869,SOT-89,12MM T/R	04713	BCX69T1
A12A6R10	321-5004-00			RES,FXD,FILM:22.1 OHM,1%,0.125W	80009	321-5004-00
A12A6R11	321-5004-00			RES,FXD,FILM:22.1 OHM,1%,0.125W	80009	321-5004-00
A12A6R12	321-5035-00			RES,FXD,FILM:27.4K,1%,0.125W	80009	321-5035-00

Component No.	Part No.	Effective	Discont	Name & Description	Code	Mfr. Part No.
A12A6R13	321-5009-00			RES,FXD,FILM:182 OHM,1%,0.125W	80009	321-5009-00
A12A6R14	321-5009-00			RES,FXD,FILM:182 OHM,1%,0.125W	80009	321-5009-00
A12A6R15	321-5000-00			RES,FXD,FILM:10 OHM,1%,0.125W	57668	MCR18EZHFW10E
A12A6R16	321-5042-00			RES,FXD,FILM:39.2 OHM,1%,0.125W	80009	321-5042-00
A12A6R17	321-5018-00			RES,FXD,FILM:1.00K,1%,0.125W	80009	321-5018-00
A12A6R18	321-5019-00			RES,FXD,FILM:1.21K,1%,0.125W	80009	321-5019-00
A12A6R19	321-5004-00			RES,FXD,FILM:22.1 OHM,1%,0.125W	80009	321-5004-00
A12A6R20	321-5004-00			RES,FXD,FILM:22.1 OHM,1%,0.125W	80009	321-5004-00
A12A6R21	321-5004-00			RES,FXD,FILM:22.1 OHM,1%,0.125W	80009	321-5004-00
A12A6R22	321-5009-00			RES,FXD,FILM:182 OHM,1%,0.125W	80009	321-5009-00
A12A6R23	321-5004-00			RES,FXD,FILM:22.1 OHM,1%,0.125W	80009	321-5004-00
A12A6R24	321-5028-00			RES,FXD,FILM:6.81K,1%,0.125W	80009	321-5028-00
A12A6R25	321-5027-00			RES,FXD,FILM:5.62K,1%,0.125W	80009	321-5027-00
A12A6R26	321-5004-00			RES,FXD,FILM:22.1 OHM,1%,0.125W	80009	321-5004-00
A12A6R27	321-5027-00			RES,FXD,FILM:5.62K,1%,0.125W	80009	321-5027-00
A12A6R28	321-5000-00			RES,FXD,FILM:10 OHM,1%,0.125W	57668	MCR18EZHFW10E
A12A6R29	321-5028-00			RES,FXD,FILM:6.81K,1%,0.125W	80009	321-5028-00
A12A6R30	321-5009-00			RES,FXD,FILM:182 OHM,1%,0.125W	80009	321-5009-00
A12A6R31	321-5019-00			RES,FXD,FILM:1.21K,1%,0.125W	80009	321-5019-00
A12A6R32	321-5017-00			RES,FXD,FILM:825 OHM,1%,0.125W	80009	321-5017-00
A12A6R33	321-5019-00			RES,FXD,FILM:1.21K,1%,0.125W	80009	321-5019-00
A12A6R34	321-5021-00			RES,FXD,FILM:1.82K,1%,0.125W	80009	321-5021-00
A12A6R35	321-5018-00			RES,FXD,FILM:1.00K,1%,0.125W	80009	321-5018-00
A12A6R36	321-5004-00			RES,FXD,FILM:22.1 OHM,1%,0.125W	80009	321-5004-00
A12A6R37	321-5028-00			RES,FXD,FILM:6.81K,1%,0.125W	80009	321-5028-00
A12A6R38	321-5009-00			RES,FXD,FILM:182 OHM,1%,0.125W	80009	321-5009-00
A12A6R39	321-5009-00			RES,FXD,FILM:182 OHM,1%,0.125W	80009	321-5009-00
A12A6R40	321-5018-00			RES,FXD,FILM:1.00K,1%,0.125W	80009	321-5018-00
A12A6R41	321-5018-00			RES,FXD,FILM:1.00K,1%,0.125W	80009	321-5018-00
A12A6R42	321-5028-00			RES,FXD,FILM:6.81K,1%,0.125W	80009	321-5028-00
A12A6R43	321-5019-00			RES,FXD,FILM:1.21K,1%,0.125W	80009	321-5019-00
A12A6R44	321-5018-00			RES,FXD,FILM:1.00K,1%,0.125W	80009	321-5018-00
A12A6R45	321-5046-00			RES,FXD,FILM:82.5 OHM,1%,0.125W	80009	321-5046-00
A12A6R46	321-5028-00			RES,FXD,FILM:6.81K,1%,0.125W	80009	321-5028-00
A12A6R47	321-5025-00			RES,FXD,FILM:3.92K,1%,0.125W	80009	321-5025-00
A12A6R48	321-5021-00			RES,FXD,FILM:1.82K,1%,0.125W	80009	321-5021-00
A12A6R49	321-5025-00			RES,FXD,FILM:3.92K,1%,0.125W	80009	321-5025-00
A12A6R50	321-5011-00			RES,FXD,FILM:274 OHM,1%,0.125W	80009	321-5011-00
A12A6R51	321-5029-00			RES,FXD,FILM:8.25K,1%,0.125W	80009	321-5029-00
A12A6R52	321-5017-00			RES,FXD,FILM:825 OHM,1%,0.125W	80009	321-5017-00
A12A6R53	321-5017-00			RES,FXD,FILM:825 OHM,1%,0.125W	80009	321-5017-00
A12A6R54	321-5035-00			RES,FXD,FILM:27.4K,1%,0.125W	80009	321-5035-00
A12A6R55	321-5042-00			RES,FXD,FILM:39.2 OHM,1%,0.125W	80009	321-5042-00
A12A6R56	321-5004-00			RES,FXD,FILM:22.1 OHM,1%,0.125W	80009	321-5004-00
A12A6R57	321-5045-00			RES,FXD,FILM:68.1 OHM,1%,0.125W	80009	321-5045-00
A12A6R58	321-5035-00			RES,FXD,FILM:27.4K,1%,0.125W	80009	321-5035-00
A12A6R59	321-5017-00			RES,FXD,FILM:825 OHM,1%,0.125W	80009	321-5017-00
A12A6R60	321-5000-00			RES,FXD,FILM:10 OHM,1%,0.125W	57668	MCR18EZHFW10E
A12A6R61	321-5019-00			RES,FXD,FILM:1.21K,1%,0.125W	80009	321-5019-00
A12A6R62	321-5030-00			RES,FXD,FILM:10.0K,1%,0.125W	80009	321-5030-00
A12A6R63	321-5000-00			RES,FXD,FILM:10 OHM,1%,0.125W	57668	MCR18EZHFW10E
A12A6R64	321-5030-00			RES,FXD,FILM:10.0K,1%,0.125W	80009	321-5030-00
A12A6R65	321-5030-00			RES,FXD,FILM:10.0K,1%,0.125W	80009	321-5030-00
A12A6R66	321-5030-00			RES,FXD,FILM:10.0K,1%,0.125W	80009	321-5030-00
A12A6R67	321-5000-00			RES,FXD,FILM:10 OHM,1%,0.125W	57668	MCR18EZHFW10E
A12A6R68	321-5004-00			RES,FXD,FILM:22.1 OHM,1%,0.125W	80009	321-5004-00
A12A6U10	156-5043-01			IC,CONVERTER:BIPOLAR,D/A;8 BIT,CURRENT OUT, MULTIPLYING;DACOBED,SO16.150.16MM T/R	80009	156-5043-01
A12A6U11	156-5019-00			IC,LINEAR:BIPOLAR,COMPARATOR;DUAL,SINGLE SUPPLY;LM393D,SO8.150,TUBE	80009	156-5019-00
A12A6U12	156-5019-00			IC,LINEAR:BIPOLAR,COMPARATOR;DUAL,SINGLE SUPPLY;LM393D,SO8.150,TUBE	80009	156-5019-00
A12A6U13	156-5254-00			IC,DIGITAL:	80009	156-5254-00
A12A6U14	156-5254-00			IC,DIGITAL:	80009	156-5254-00
A12A6U15	156-5019-00			IC,LINEAR:BIPOLAR,COMPARATOR;DUAL,SINGLE SUPPLY;LM393D,SO8.150,TUBE	80009	156-5019-00
A12A6U16	156-5019-00			IC,LINEAR:BIPOLAR,COMPARATOR;DUAL,SINGLE SUPPLY;LM393D,SO8.150,TUBE	80009	156-5019-00
A12A6U17	156-5137-00			MICROCKT,DGTL:CMOS,SER BUS SLAVE INTFC	80009	156-5137-00
A12A6U18	156-5017-01			IC,LINEAR:BIPOLAR,OP-AMP;DUAL;MC1458D,SO8.150,12MM T/R	80009	156-5017-01

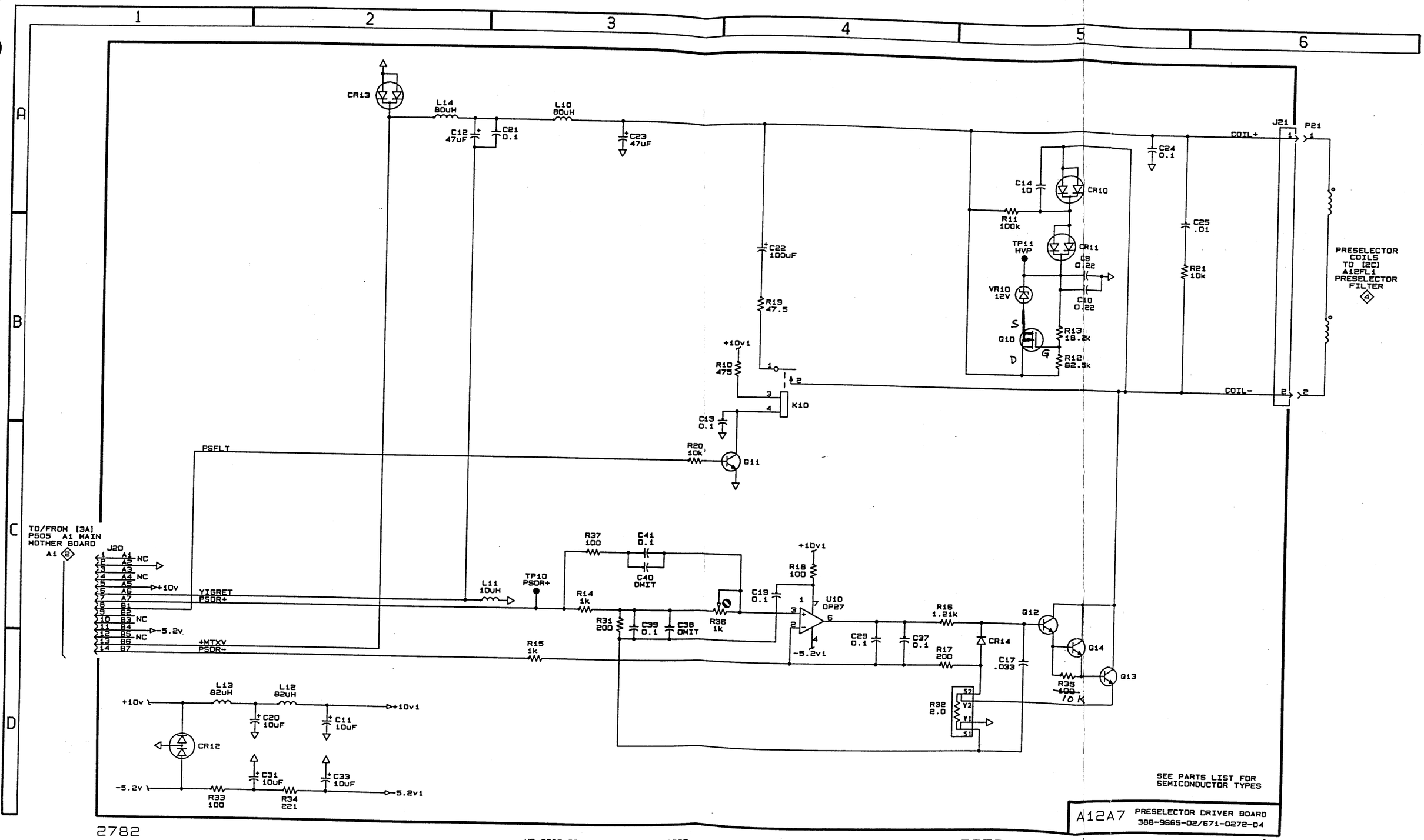
CR13
L14 80uH
L10 80uH
C12 47uF
C21 0.1
C23 47uF
C22 100uF
R19 47.5
+10v1
R10 475
K10
C13 0.1
R20 10k
Q11
PSFLT
C24 0.1
C14 10
CR10
R11 100k
TP11 HVP
CR11
Q9 0.22
C10 0.22
VR10 12V
Q10
R13 18.2k
R12 82.5k
C25 .01
R21 10k
J21
P21
COIL+
COIL-
PRESELECTOR COILS TO (2C) A12FL1 PRESELECTOR FILTER
TO/FROM (3A) P505 A1 MAIN MOTHER BOARD
A1
J20
NC
+10v
YIGRET
PSOR+
-5.2v
+MTXV
PSOR-
R37 100
C41 0.1
C40 OMIT
L11 10uH
TP10 PSOR+
R14 1k
R31 200
C39 0.1
C38 OMIT
R36 1k
R15 1k
C19 0.1
R18 100
U10 OP27
-5.2v1
C29 0.1
C37 0.1
R16 1.21k
R17 200
CR14
C17 .033
Q12
Q14
Q13
R35 100 10K
R32 2.0
L13 82uH
L12 82uH
C20 10uF
C11 10uF
CR12
C31 10uF
C33 10uF
R33 100
R34 221
-5.2v1
SEE PARTS LIST FOR SEMICONDUCTOR TYPES
A12A7 PRESELECTOR DRIVER BOARD
388-9665-02/671-0272-04
2782
HB-9665-02 REV. MAR 31, 1992
PRESELECTOR DRIVER A12A7

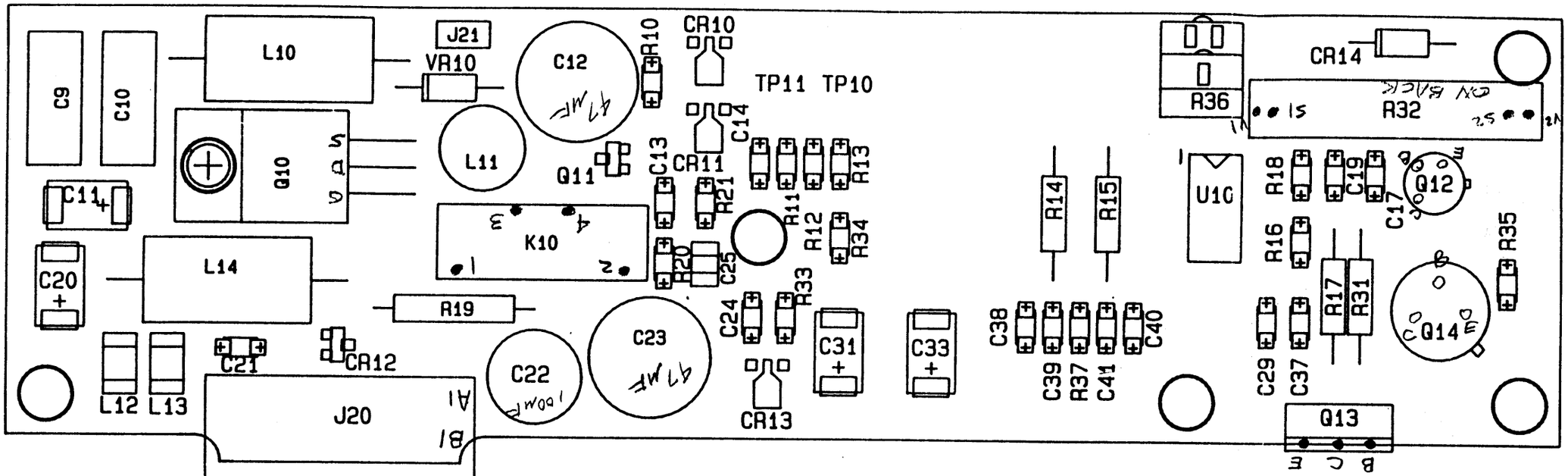

TEKTRONIX INC. BEAVERTON, OR.	
LAYER NAME ASSEMBLY FRONT	
BOARD NAME PRESELECTOR DRIVER	
TEK PART #: H-9665-03	DATE10OCT92
ENGINEERED BY: GORDON OLSEN	

Item	Quantity	Reference	Part
1	2	C9,C10	C053, 0.22_200V, 283-0208-00
2	4	C11,C20,C31,C33	SC002, 10uF_TA, 290-5002-00
3	2	C12,C23	C002, 47uF, 290-0846-00
4	8	C13,C19,C21,C24,C29,C37, C39,C41	SC1206, 0.1, 283-5004-00
5	1	C14	SC1206, 10pF, 283-5000-00
6	1	C17	SC1206, .033, 283-5018-00
7	1	C22	C001, 100uF, 290-0973-00
8	1	C25	SC1206, .01, ~~283-5070-00~~ 283-5003-00
9	2	C38,C40	SC1206, OMIT,
10	3	CR10,CR11,CR13	SOT89, BAW79, 152-5008-00
11	1	CR12	SOT23-O, BAV99, 152-5004-00
12	1	CR14	CR003, D-0141, 152-0141-02
13	1	J20	JR090, M14, 131-3445-00
14	1	J21	CONN1, 2-J21, 131-1857-00
15	1	K10	K010, N/O, 148-0076-00
16	2	L10,L14	L020A, 80uH, 108-0422-00
17	1	L11	L026, 10uH, 108-1263-00
18	2	L12,L13	SL1712, 82uH, 108-5009-00
19	1	P21	2CONN, OMIT,
20	1	Q10	T220DSGL, 151-1169, 151-1169-00
21	1	Q11	SOT23-O, BT3904, 151-5001-00
22	1	Q12	Q026, 2N5551, 151-0347-00
23	1	Q13	T220EBCS, MJE13007, 151-0632-00
24	1	Q14	Q040, 2N3501S, 151-0129- ~~151-0274-00~~
25	1	R10	SR1206, 475, 321-5014-00
26	1	R11	SR1206, 100k, 321-5047-00

Item	Quantity	Reference	Part
27	1	R12	SR1206, 82.5k, 321-5041-00
28	1	R13	SR1206, 18.2k, 321-5033-00
29	2	R14,R15	R028, 1k, 321-0193-07
30	1	R16	SR1206, 1.21k, 321-5019-00
31	2	R17,R31	R028, 200, 321-0126-07
32	3	R18,R33,R37	SR1206, 100, 321-5006-00
33	1	R19	R009, 47, 308-0965-00
34	3	R20,R21,R35	SR1206, 10k, 321-5030-00
35	1	R32	R040, 2.0, 310-0500-00
36	1	R34	SR1206, 221, 321-5010-00
37	1	R36	SRV010D, 1k, 311-1280-00
38	2	TP10,TP11	TESTP2, TP, TP_PAD
39	1	U10	DIP8, OP27, 156-1851-00
40	1	VR10	CR001, 12V, 152-0520-00

Item	Quantity	Reference	Part
1	2	C9,C10	C053, 0.22_200V, 283-0208-00
2	4	C11,C20,C31,C33	SC002, 10uF_TA, 290-5002-00
3	2	C12,C23	C002, 47uF, 290-0846-00
4	8	C13,C19,C21,C24,C29,C37, C39,C41	SC1206, 0.1, 283-5004-00
5	1	C14	SC1206, 10pF, 283-5000-00
6	1	C17	SC1206, .033, 283-5018-00
7	1	C22	C001, 100uF, 290-0973-00
8	1	C25	SC1206, .01, 283-5070-00
9	2	C38,C40	SC1206, OMIT,
10	3	CR10,CR11,CR13	SOT89, BAW79, 152-5008-00
11	1	CR12	SOT23-O, BAV99, 152-5004-00
12	1	CR14	CR003, D-0141, 152-0141-02
13	1	J20	JR090, M14, 131-3445-00
14	1	J21	CONN1, 2-J21, 131-1857-00
15	1	K10	K010, N/O, 148-0076-00
16	2	L10,L14	L020A, 80uH, 108-0422-00
17	1	L11	L026, 10uH, 108-1263-00
18	2	L12,L13	SL1712, 82uH, 108-5009-00
19	1	P21	2CONN, OMIT,
20	1	Q10	T220DSGL, 151-1169, 151-1169-00
21	1	Q11	SOT23-O, BT3904, 151-5001-00
22	1	Q12	Q026, 2N5551, 151-0347-00
23	1	Q13	T220EBCS, MJE13007, 151-0632-00
24	1	Q14	Q040, 2N3501S, 151-0274-00
25	1	R10	SR1206, 475, 321-5014-00
26	1	R11	SR1206, 100k, 321-5047-00

Item	Quantity	Reference	Part
27	1	R12	SR1206, 82.5k, 321-5041-00
28	1	R13	SR1206, 18.2k, 321-5033-00
29	2	R14,R15	R028, 1k, 321-0193-07
30	1	R16	SR1206, 1.21k, 321-5019-00
31	2	R17,R31	R028, 200, 321-0126-07
32	3	R18,R33,R37	SR1206, 100, 321-5006-00
33	1	R19	R009, 47, 308-0388-00
34	3	R20,R21,R35	SR1206, 10k, 321-5030-00
35	1	R32	R040, 2.0, 310-0500-00
36	1	R34	SR1206, 221, 321-5010-00
37	1	R36	SRV010D, 1k, 311-1280-00
38	2	TP10,TP11	TESTP2, TP, TP_PAD
39	1	U10	DIP8, OP27, 156-1851-00
40	1	VR10	CR001, 12V, 152-0520-00

Level	Component Item	Description	Qty Per	UM	Ph	T	Iss
1	674027204	ACCEL>2782:PRESLCTR DRVR 388-9665-03 MACH INSERTE	1.0	EA			
.2	108500900	FXD,82UH, +/- 10%,Q=50,S POWER;82UH,10%,I<0.12A,R	2.0	EA			
.2	151500100	NPN,SI,SOT-23,MMBT3904 BIPOLAR,NPN;40V,200MA,30	1.0	EA			
.2	152500400	SI,SW,SER PR,70V SOT23 B ,ULTRA FAST;70V,0.15A,6N	1.0	EA			
.2	152500800	,;400V,1A,MONOLITHIC COM ,;400V,1A,MONOLITHIC COM	3.0	EA			
.2	283500000	10PF,5%,50V NPI,1206 PKG MLC;10PF,5%,50V,NPO,1206	1.0	EA			
.2	283500300	.01UF,10% 50V FXD CAP MLC;0.01UF,10%,50V,X7R,1	1.0	EA			
.2	283500400	.1UF,10%,25V 13 REEL/10K MLC;0.1UF,10%,25V,X7R,12	8.0	EA			
.2	283501000	0.22UF,10%,25V X7R,1210 MLC;0.22UF,10%,25V,X7R,1	1.0	EA			
.2	283501800	0.033UF,10%,50V X7R,1206 MLC;0.033UF,10%,50V,X7R,	1.0	EA			
.2	290500200	TANTALUM,10UF,20V,20% DRY;10UF,20%,20V,TANT OX	4.0	EA			
.2	321500600	100 OHM,1%,0.125W RESIST THICK FILM;100 OHM,1%,0.	3.0	EA			
.2	321501000	221OHM 1% 1/8W THICK FILM;221 OHM,1%,0.	1.0	EA			
.2	321501400	475 OHM,1%,0.125W TAPE & THICK FILM;475 OHM,1%,0.	1.0	EA			
.2	321501900	1.21K,1%,0.125W,1206 8MM THICK FILM;1.21K OHM,1%,	1.0	EA			
.2	321503000	10.0K,1%,0.125W RESISTOR THICK FILM;10.0K OHM,1%,	3.0	EA			
.2	321503300	18.2K 1% 1/8W THICK FILM;18.2K OHM,1%,	1.0	EA			
.2	321504100	82.5K,1%,0.125W RESISTOR THICK FILM;82.5K OHM,1%,	1.0	EA			
.2	321504700	100K,1%,0.125W RESISTOR THICK FILM;100K OHM,1%,0	1.0	EA			
.2	388966503	ACCEL>2782:PRESELECTOR PRESELECTOR DRIVER	1.0	EA			

Parent Item	Description	UM	Eff Date	Levels	Output
679027201	ACCEL>2782:	EA	06/22/95	5	b191sp04

[illegible]	Component Item	Description	Qty Per	UM	Ph	T	Iss
1	108042200	COIL,RF (TV JIT)	2.0	EA			
1	108126300	CUSTOM,POWER;80UH,20%,ID INDUCTOR,10UH,10%	1.0	EA			
1	131185700	POWER;10UH,10%,I<2.1A,RD 36/0.025 SQ PIN,ON 0.1 C	0.05606	EA			no
1	131344500	PCB,;MALE,STR,1 X 36,0.1 CONN,RCPT,ELEC	1.0	EA			
1	148007600	PCB,;MALE,RTANG,2 X 7,0. RELAY,REED B	1.0	EA			
1	151012400	1 FORM A; 100VDC, 0.25A, TRANSISTOR A/E	1.0	EA			
1	151034700	BIPOLAR,NPN;150V,300MA,1 NPN,SI,TO-92 2N5551 FAM	1.0	EA			
1	151063200	BIPOLAR,NPN;160V,600MA,1 TRANSISTOR A/E	1.0	EA			
1	151116900	BIPOLAR,NPN;400V,8.0A,SW TRANSISTOR	1.0	EA			
1	152014102	MOS,P-CH;500V,2.0A,6.0 O SW,SI,30V,150MA,30V,DO-3	1.0	EA			
1	152052000	,ULTRA FAST;40V,150MA,4N ZEN,SI,12V,5%,1W,DO-41	1.0	EA			
1	156185100	,;12V,5%,1W;1N4742A,DO-4 IC; OP27GP	1.0	EA			
1	211040800	BIPOLAR,OP-AMP;100UV VOS SCR,ASSEM WSHR (STOCKLES	1.0	EA			no
1	220082900	4-40 X 0.250,PNH,STL,ZIN 4-40 X 0.216 OD,STL CD P	1.0	EA			no
1	283020800	4-40 X 0.216 OD,STL CD P 0.22UF,10%,200V SQUARE	2.0	EA			
1	290084600	0.22UF,10%,200V SQUARE CAP,FXD,ELCTLT	2.0	EA			
1	290097300	47UF,+75-20%,35V ALUMIN 100UF,20%,25VDC ALUMINU	1.0	EA			
1	308038800	100UF,20%,25VDC ALUMINU 47OHM,5%,3W AXIAL LEADS	1.0	EA			
1	310050000	47 OHM,5%,3W AXIAL LEAD ACCEL>2.0 OHM,0.25%,4W,	1.0	EA			
1	311128000	2.0 OHM,0.25%,4W,MICA CA ACCEL>TRMR,1K OHM,0.5W	1.0	EA			
1	321012607	TRMR,1K OHM,0.5W CERMET 200 OHM,0.1%,0.125W,TC=T	2.0	EA			
1	321019307	200 OHM,0.1%,0.125W,TC=T 1K OHM,0.1%,0.125W,TC=T9	2.0	EA			
.	361096500	1K OHM,0.1%,0.125W,TC=T9 ACCEL>FAX PO'S CK TV'STK 0.29 L X 0.13 ID,BRASS	1.0	EA			

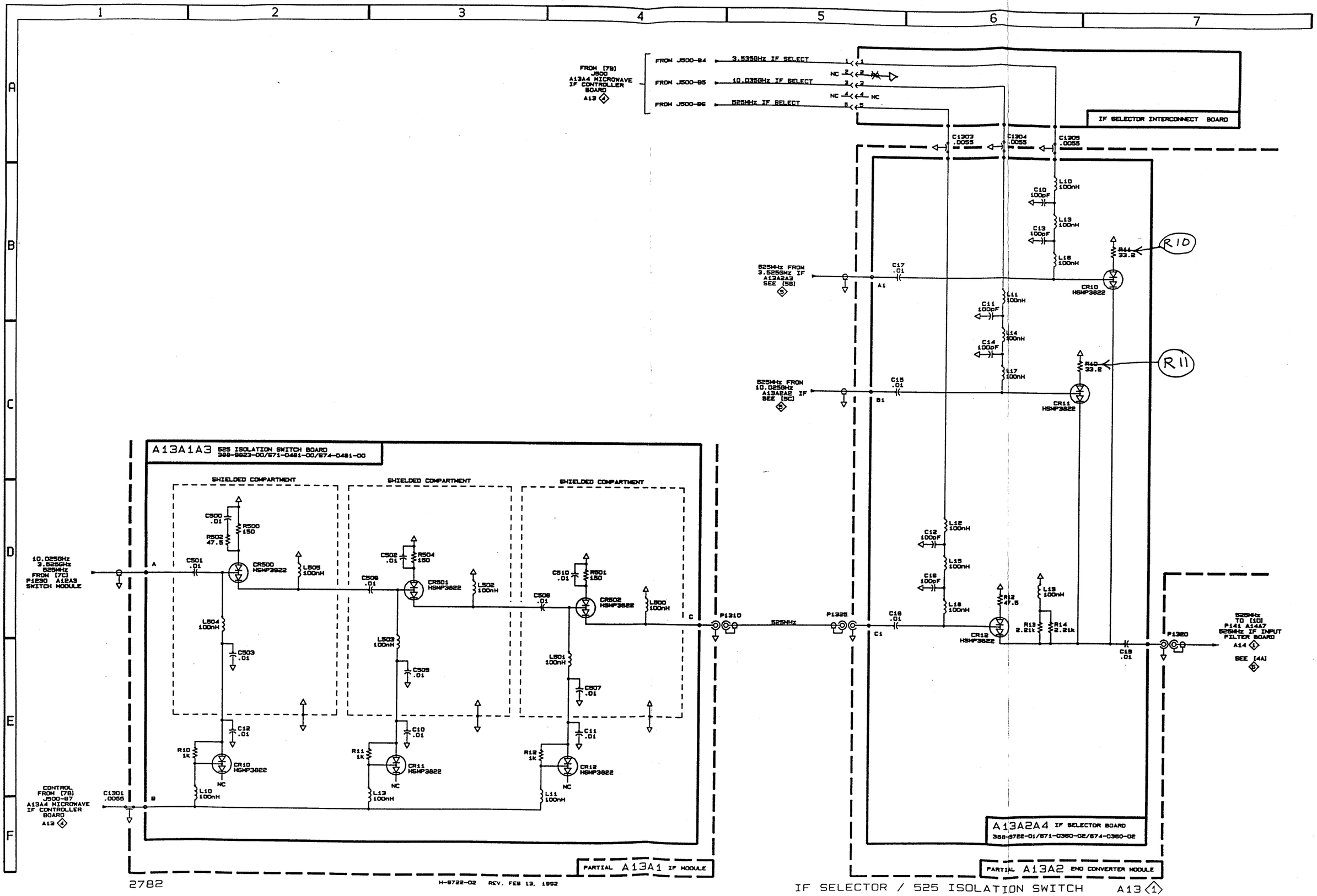

2782

H-8722-02 REV. FEB 12, 1992

IF SELECTOR / 525 ISOLATION SWITCH A13 1

1X

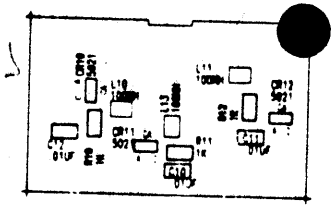

TITLE			SCALE
BOARD NUMBER			
SHEET			
	DATE	DATE	DOCUMENT NUMBER	REV

FFECTIVITY DATE: ALL

I N D E N T E D B I L L S O F M A T E R I A L

ARENT PART: 671048100 525 ISOLATION SW UM: EA PC: 2E ECN:
ERC: SRCE CODE: A TYPE: 1 ABC: B PL: P DATE: 00-X

LEVEL	ITEM NO	COMPONENT PART NUMBER/ PART DESCRIPTION	ERC	PRODUCT CODE	S C	T Y	S P	A B	P L	UM	EXTENDED QTY PER	ECN CHG	START DATE	S/N
	0004	337353300 CKT BD	E	2E	R	1	S	C	P	EA	3			
	0001	674048100 388-9823-XX MACH INSERTED		2E	A	1	S	C	P	EA	1			
3	0003	108503000 COIL, RF	A	2E	P	1	S	B	P	EA	9			
			100NH L10, 11, 13, 500 L501, 502, 503, 504, 505											
3	0001	152502100 DIODE, SIG	A	2E	P	1	S	C	P	EA	6			
			CR10, 11, 12 CR500, 501, 502											
3	0005	283500300 CAP, FXD, CER DI	*	2E	P	1	S	B	P	EA	12			
			.01UF C10, 11, 12, 500, 501 C502, 503, 506, 507, 508 C509, 510											
3	0004	321500800 RES, FXD, FILM	B	2E	P	1	S	C	P	EA	3			
			150 OHM R500, 501, 504											
3	0002	321501800 RES, FXD, FILM	A	2E	P	1	S	B	P	EA	3			
			1.00K R10, 11, 12											
3	0006	321504300 RES, FXD, FILM	A	25	P	1	N	C	P	EA	1			
			47.5 OHM R502											
3	0030	388982300 525 ISOLATION SW	C	2E	R	1	S	C	P	EA	1			3224
			525 ISOL SW											

END OF REPORT

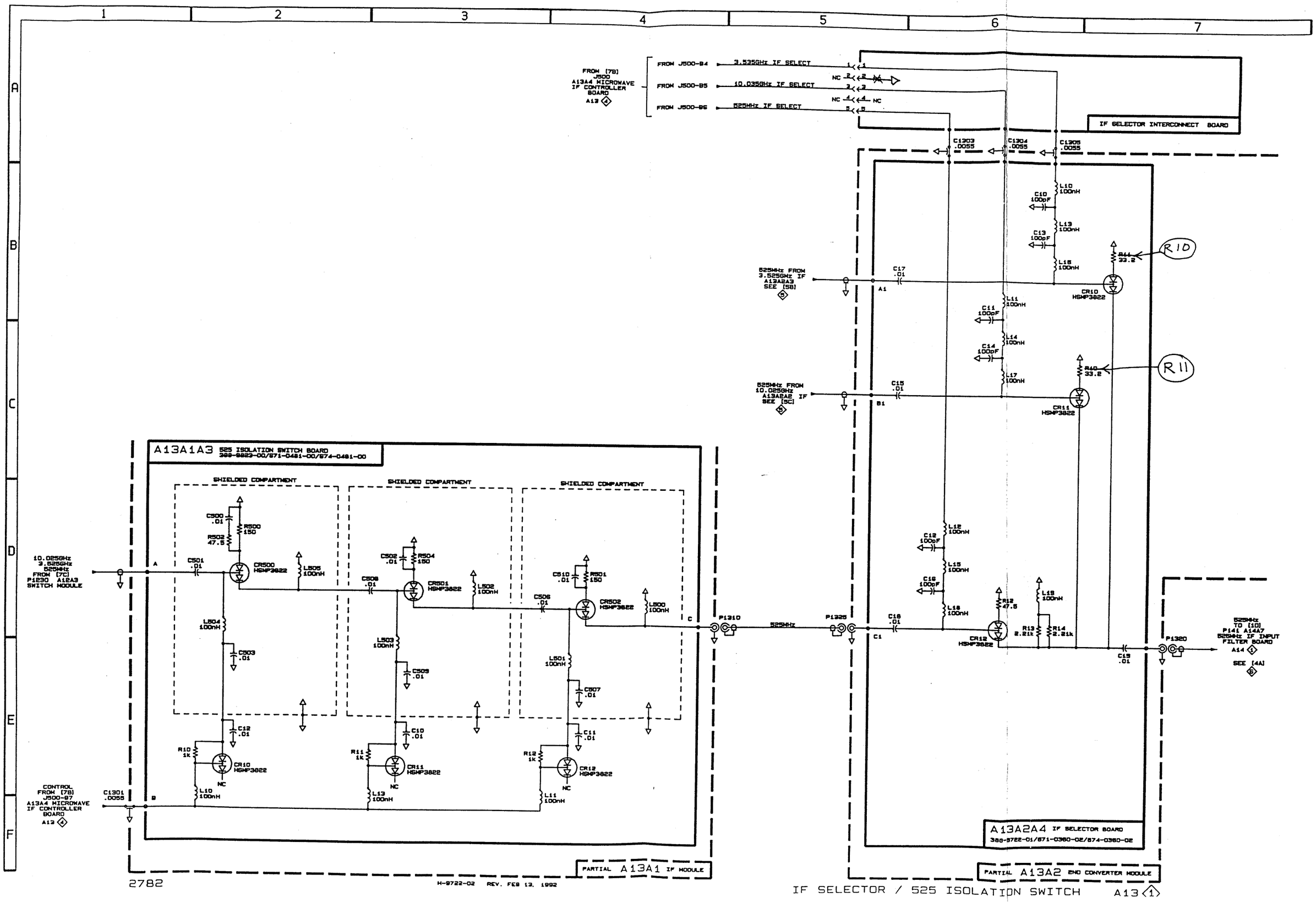
FROM [7B] J500 A13A4 MICROWAVE IF CONTROLLER BOARD A12
FROM J500-B4 3.535GHz IF SELECT
FROM J500-B5 10.0350GHz IF SELECT
FROM J500-B6 525MHz IF SELECT
NC
IF SELECTOR INTERCONNECT BOARD
C1303 .0055
C1304 .0055
C1305 .0055
525MHz FROM 3.525GHz IF A13A2A3 SEE [5B]
525MHz FROM 10.0250GHz IF A13A2A2 SEE [5C]
C17 .01
C15 .01
A1
B1
R10
R11
CR10 HSMP3822
CR11 HSMP3822
A13A1A3 525 ISOLATION SWITCH BOARD 388-9822-00/671-0481-00/674-0481-00
SHIELDED COMPARTMENT
10.0250GHz 3.525GHz 525MHz FROM [7C] P1230 A12A3 SWITCH MODULE
CONTROL FROM [7B] J500-B7 A13A4 MICROWAVE IF CONTROLLER BOARD A12
C1301 .0055
CR500 HSMP3822
CR501 HSMP3822
CR502 HSMP3822
CR10 HSMP3822
CR11 HSMP3822
CR12 HSMP3822
P1310
525MHz
P1325
P1320
525MHz TO [1D] P141 A14A7 525MHz IF INPUT FILTER BOARD A14
SEE [4A]
A13A2A4 IF SELECTOR BOARD 388-9722-01/671-0360-02/674-0360-02
PARTIAL A13A1 IF MODULE
PARTIAL A13A2 END CONVERTER MODULE
2782
H-9722-02 REV. FEB 13, 1992
IF SELECTOR / 525 ISOLATION SWITCH A13 1

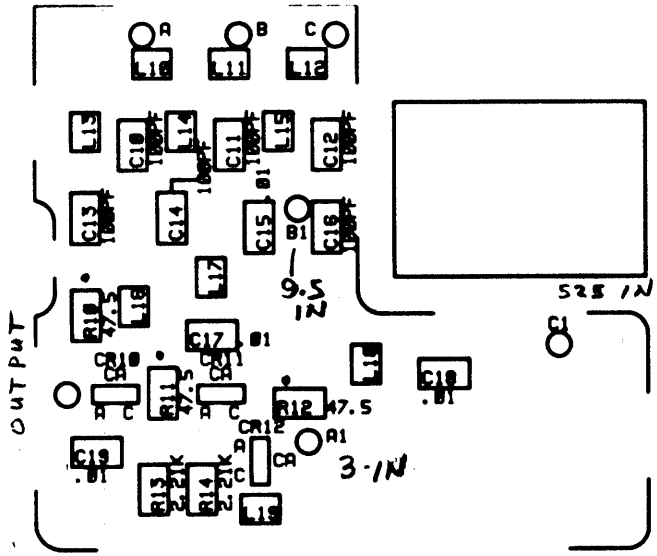

NOTE: ALL COILS ARE 100NH
ALL DIODES ARE (3822)

TITLE IF SELECTOR				SCALE 2X
BD. NUMBER H-9722-01				
SHEET TITLE FRONT ASSEMBLY				
TEKTRONIX	DATE: 09/07/88	LAYER NO.	DOCUMENT NO. TK71C-1	REV C
	DESIGNED BY RD			

BLACK STAR - POS FILM

DIGITIZED BY SYNERTECH, INC D1 L8

ASSEMBLY DRAWING FRONT
BD# H-9722-01
BD NAME IF SELECTOR
EE JON MANOR X 6496
ECB RUTH D. X 2319
DATE 09/07/88 PROJECT
DRAWER # 2-4 2782

E C B	

PRINTED 19[illegible]n-91 02:13 PM [illegible]TV PRODUCTS BM[illegible] VERSI

EFFECTIVITY DATE: ALL

INDENTED BILLS OF MATERIAL

PARENT PART: 119337200 MWIF UM: EA PC: 2E ECN:
ERC: SRCE CODE: A TYPE: 1 ABC: A PL: P DATE: 00-

LEVEL	ITEM NO	COMPONENT PART NUMBER/ PART DESCRIPTION	ERC	PRODUCT CODE	S C	T Y	S P	A B	P L	UM	EXTENDED QTY PER	ECN CHG	DATE	START S/N
2	0002	131134300 CONN,HDR: 3POS FEEDTHRU CENTER ROW	F	25	X	1	N	C	P	EA	0.138800			5254
2	0001	131414300 CONN,RF JACK:		2E	P	1	S	A	P	EA	2			
2	0010	174183400 WIRE,ELECTRICAL 28 AWG BARE WIRE		2E	P	1	S	C	P	FT	0.083000			P83A
2	0030	211044900 SCREW,CAP		2E	X	1	S	C	P	EA	7			PICN
2	0005	281082500 CAP,FXD,CER DI	H	2E	P	1	S	A	P	EA	3			
2	0008	361149001 STANDOFF	A	2E	P	1	S	C	P	EA	2			7227
2	0007	380092000 HOUSING,SEL	A	2E	P	1	S	B	P	EA	1			5254
2	0009	388996100 3 POS FDTH CONN	C	2E	R	1	S	C	P	EA	1			
2	0020	671036002 IF SELECTOR;;388-9722-XX WI ADD PART		2E	A	1		C	P	EA	1			7432
3	0005	108503000 COIL,RF 100NH L10,11,12,13,14,15 L16,17,18,19	A	2E	P	1	S	B	P	EA	10			
3	0007	152502100 DIODE,SIG 3822 CR10,11,12	A	2E	P	1	S	C	P	EA	3			
3	0001	283500100 CAP,FXD,CER DI 100PF C10,11,12,13,14,16	*	2E	P	1	S	B	P	EA	6			
3	0002	283500300 CAP,FXD,CER DI .01UF C15,17,18,19	*	2E	P	1	S	B	P	EA	4			
3	0008	321502200 RES,FXD,FILM 2.21K R13,14	A	2E	P	1	S	C	P	EA	2			
3	0003	321504300 RES,FXD,FILM 47.5 OHM R12	A	25	P	1	N	C	P	EA	1			7432
3	0010	321505000 RES,FXD,FILM	A	2E	P	1	S	C	P	EA	2			7432

PRINTED 19[illegible]n-91 02:13 PM [illegible]TV PRODUCTS BM[illegible] VERSI

EFFECTIVITY DATE: ALL

I N D E N T E D B I L L S O F M A T E R I A L

PARENT PART: 119337200 MWIF UM: EA PC: 2E ECN:
ERC: SRCE CODE: A TYPE: 1 ABC: A PL: P DATE: 00-

LEVEL	ITEM NO	COMPONENT PART NUMBER/ PART DESCRIPTION	ERC	PRODUCT CODE	S C	T Y	S P	A B	P L	UM	EXTENDED QTY PER	ECN CHG	DATE	START S/N
3	0006	388972201 525 IF SELECTOR	R10,11 D	2E	R	1	S	C	P	EA	1			3224

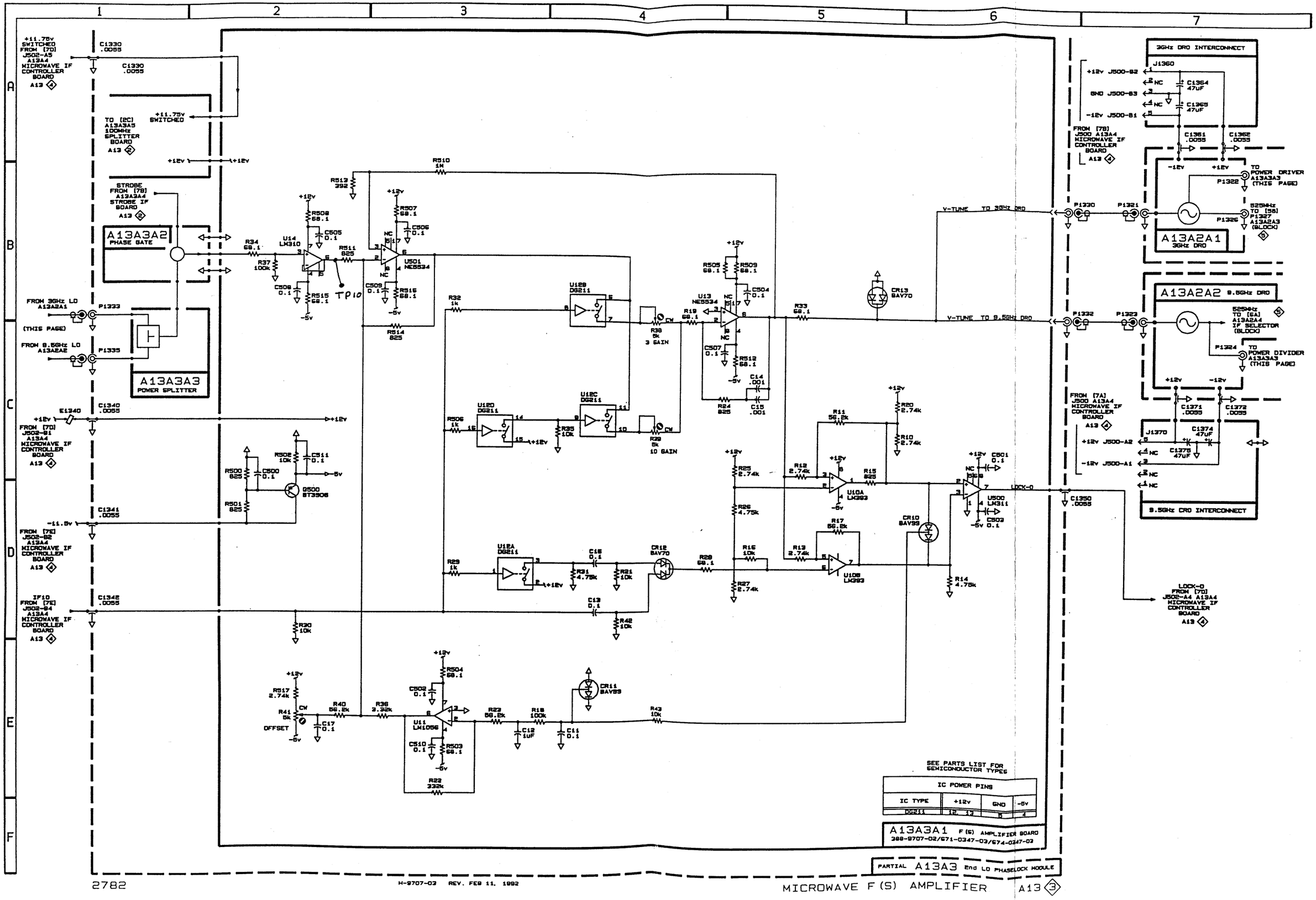

H-9707-03 REV. FEB 11, 1992

ECO: RUTH D. X 2319
DATE 5-2-89 PROJECT NO. 2782
DRAWER NO. 2-4

PICH	REV. DATE
#59A	5-2-89

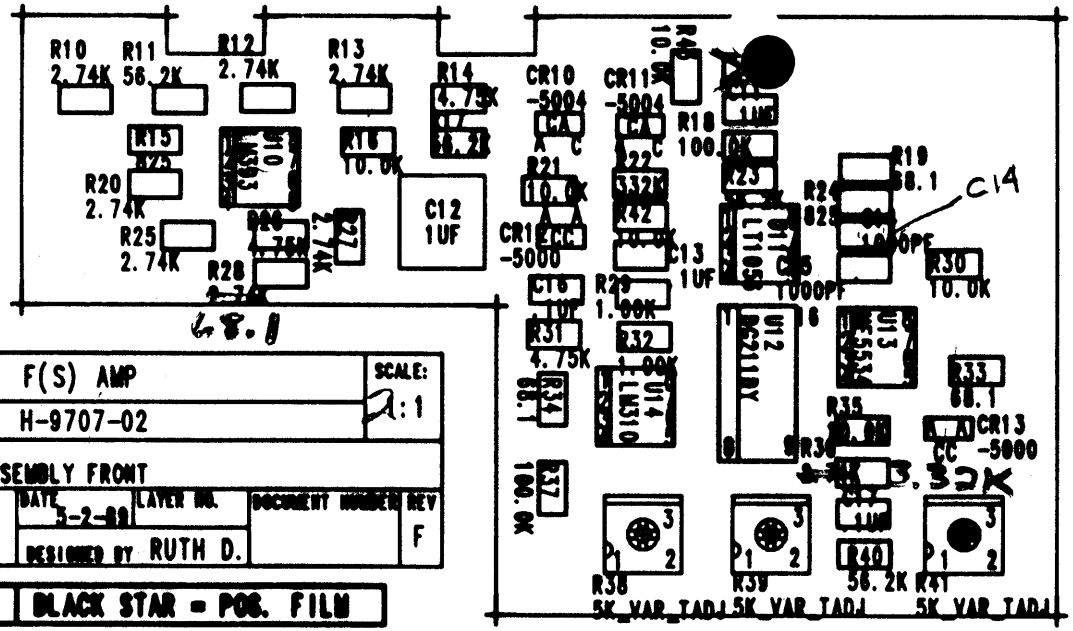

68.1

TITLE	F(S) AMP		SCALE: 2:1
BOARD NUMBER	H-9707-02		
SHEET TITLE	ASSEMBLY FRONT		
TEKTRONIX	DATE 5-2-89	LAYER NO.	DOCUMENT NUMBER / REV F
	DESIGNED BY RUTH D.		

BLACK STAR = POS. FILM

67-0340-03

ASSEMBLY DWG. BACK
DW. # H-9707-02
DW. NAME F (S) AMP
EE: JOE T. x 1871
ECO: RUTH D. x 2319
DATE 5-2-89 PROJECT NO. 2782
DRAWER NO. 2-4

PICN	REVISION DATE
#59A	5-2-89

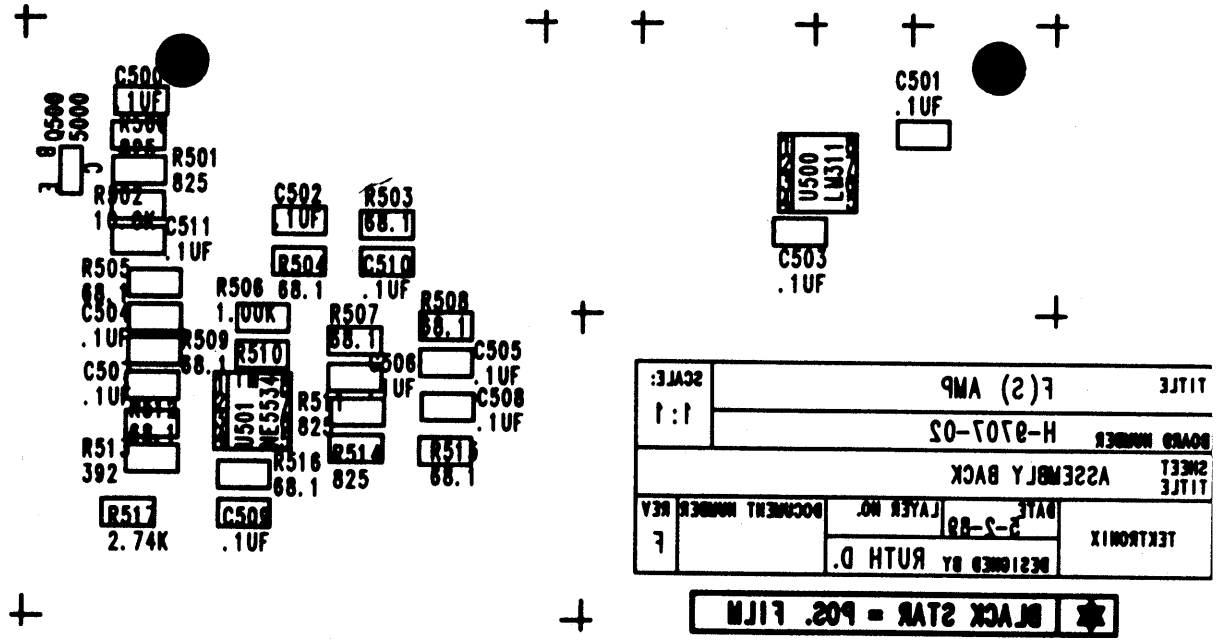

EFFECTIVI[illegible]DATE: ALL

INDENT[illegible] BILLS OF MATERIAL

PARENT PART: 119296403 2ND LO PHASE LOCK UM: EA PC: 2E ECN:
ERC: SRCE CODE: A TYPE: 1 ABC: A PL: P DATE: 0C

LEVEL	ITEM NO	COMPONENT PART NUMBER/ PART DESCRIPTION	ERC	PRODUCT CODE	S T S A P C Y P B L UM	EXTENDED QTY PER	ECN CHG	START DATE	S/
			56.2 OHM STROBE IF						
2	0005	380089100 HOUSING,0 LOCK	B	2E	P 1 S B P EA	1			
2	0050	671034703 F(S) AMP,,388-9707-XX WIRED		2E	A 1 S B P EA	1			
3	0084	151500000 TRANSISTOR,SIG	B	2E	P 1 S B P EA	1			P59
			BT3906 Q500						
3	0003	152500000 DIODE,SIG	A	2E	P 1 S B P EA	2			P3[illegible]
			CR12,13						
3	0008	152500400 DIODE,SIG	A	2E	P 1 S B P EA	2			P59
			BAV99 CR10,11						
3	0081	156500000 IC,LINEAR	*	2E	P 1 S C P EA	1			P59
			LM311 U500						
3	0082	156501900 IC,LINEAR	A	2E	P 1 S C P EA	1			P59
			LM393 U10						
3	0131	156509501 IC,LINEAR	*	2E	P 1 S B P EA	2			P59
			NE5534 U13,501						
3	0085	156527401 MICROCKT,DGTL		2E	P 1 S A P EA	1			P59
			DG211D4 U12						
3	0083	156535200 IC,LINEAR		2E	P 1 S B P EA	1			P59
			LT1056 U11						
3	0002	156547400 IC,LINEAR	*	2E	P 1 S C P EA	1			
			LM310 U14						
3	0087	283500200 CAP,FXD,CER DI	*	2E	P 1 S B P EA	2			P59
			1000PF C14,15						
3	0019	283500400 CAP,FXD,CER DI		2E	P 1 S A P EA	16			722
			.1UF C11,13,16,17,500 C501,502,503,504,505						

PRINTED Jun-91 02:13 PM TV PRODUCTS VER

EFFECTIVITY DATE: ALL

INDENTED BILLS OF MATERIAL

PARENT PART: 119296403 2ND LO PHASE LOCK UM: EA PC: 2E ECN:
ERC: SRCE CODE: A TYPE: 1 ABC: A PL: P DATE: 0

LEVEL	ITEM NO	COMPONENT PART NUMBER/ PART DESCRIPTION	ERC	PRODUCT CODE	S C	T Y	S P	A B	P L	UM	EXTENDED QTY PER	ECN CHG	DATE	START S
		C506,507,508,509,510 C511												
3	0029	283501600 CAP,FXD,CER DI	B	2E	P	1	S	B	P	EA	1			23
		1UF C12												
3	0016	311501100 RES,VAR,NONWW	C	2E	P	1	S	C	P	EA	3			
		5K R38,39,41												
3	0077	321501300 RES,FXD,FILM	B	2E	P	1	S	C	P	EA	1			P5
		392 R513												
3	0078	321501700 RES,FXD,FILM	A	2E	P	1	S	C	P	EA	6			P5
		825 R15,24,500,501,511 R514												
3	0007	321501800 RES,FXD,FILM	A	2E	P	1	S	B	P	EA	3			P5
		1K R29,32,506												
3	0079	321502300 RES,FXD,FILM	A	2E	P	1	S	C	P	EA	7			72
		2.74K R10,12,13,20,25,27 R517												
3	0060	321502400 RES,FXD,FILM	A	2E	P	1	S	C	P	EA	1			
		3.32K R36												
3	0010	321502600 RES,FXD,FILM	A	2E	P	1	S	C	P	EA	3			P5
		4.75K R14,26,31												
3	0013	321503000 RES,FXD,FILM	A	2E	P	1	S	B	P	EA	7			P5
		10K R16,21,30,35,42,43 R502												
3	0086	321503900 RES,FXD,FILM	A	2E	P	1	S	C	P	EA	4			P5
		56.2K R11,17,23,40												
3	0080	321504500 RES,FXD,FILM	A	2E	P	1	S	C	P	EA	13			72
		68.1 R19,33,34,503,504 R505,507,508,509,512												

EFFECTIVIT DATE: ALL

INDENTED BILLS OF MATERIAL

PARENT PART: 119296403 2ND LO PHASE LOCK UM: EA PC: 2E ECN:
ERC: SRCE CODE: A TYPE: 1 ABC: A PL: P DATE: 00

LEVEL	ITEM NO	COMPONENT PART NUMBER/ PART DESCRIPTION	ERC	PRODUCT CODE	S C	T Y	S P	A B	P L	UM	EXTENDED QTY PER	ECN CHG	START DATE	S/
3	0014	321504700 RES,FXD,FILM	R515,516,28 100K A	2E	P	1	S	C	P	EA	2			
3	0015	321504800 RES,FXD,FILM	R18,37 332K A	2E	P	1	S	C	P	EA	1			
3	0031	321504900 RES,FXD,FILM	R22 1M A	2E	P	1	S	C	P	EA	1			P59
3	0050	388970702 F(S)AMP	R510 D	2E	R	1	S	C	P	EA	1			322
2	0080	674034801 388-9708-XX MACH INSERTED		2E	A	1		C	P	EA	1			523
3	0005	283500200 CAP,FXD,CER DI	100MHZ SPLITTER *	2E	P	1	S	B	P	EA	4			
3	0006	283507000 CAP,FXD,CER DI	.001UF C10,12,500,501	2E	P	1	S	C	P	EA	2			
3	0001	321500000 RES,FXD,FILM	.01UF C11,502 C	2E	P	1	S	B	P	EA	6			
3	0002	321500400 RES,FXD,FILM	10.0 OHM R10,11,15,16,500 R501 B	2E	P	1	S	C	P	EA	1			
3	0003	321500500 RES,FXD,FILM	22.1 OHM R14 B	2E	P	1	S	C	P	EA	1			
3	0030	321500700 RES,FXD,FILM	27.4 OHM R12 B	2E	P	1	S	C	P	EA	1			243
3	0009	388970801 100MHZ SPLITTER/AMP	121 OHM R13 C	2E	R	1	S	C	P	EA	1			322
2	0006	674039302 388-9709-XX MACH INSERTED		2E	A	1		B	P	EA	1			523
3	0036	108500100 COIL,RF	STROBE IF A	2E	P	1	S	B	P	EA	1			P93

Parent Item	Description	UM	Eff Date	Levels	Output
74034703	ACCEL>2782:	EA	10/23/95		b47lnp02

Level	Component	Description	Qty Per	POU	Op	UM	Fcst	Ph	T	IP
1	151500000	PNP 3906 TAPE & REEL TRA	1.0	D	100	EA	100.0			Y
1	152500000	BIPOLAR,PNP;40V,200MA,25 SEMICOND DVC,DI; BAV70	2.0	D	120	EA	100.0			Y
1	152500400	,ULTRA FAST;70V,0.15A,6N SI,SW,SER PR,70V SOT23 B	2.0	D	120	EA	100.0			Y
1	156500000	,ULTRA FAST;70V,0.15A,6N BIPOLAR,COMPARATOR;OPEN	1.0	D	100	EA	100.0			Y
1	156501900	BIPOLAR,COMPARATOR;OPEN BIPOLAR,COMPARATOR;DUAL,	1.0	D	120	EA	100.0			Y
1	156509501	BIPOLAR,COMPARATOR;DUAL, MICROCKT,LINEAR	1.0	D	100	EA	100.0			Y
1	156509501	BIPOLAR,OP-AMP;LOW NOISE MICROCKT,LINEAR	1.0	D	120	EA	100.0			Y
1	156527401	BIPOLAR,OP-AMP;LOW NOISE CMOS,ANALOG SWITCH;QUAD;	1.0	D	120	EA	100.0			Y
1	156535200	CMOS,ANALOG SWITCH;QUAD; BIFET,OP-AMP;LOW OFFSET;	1.0	D	120	EA	100.0			Y
1	156547400	BIFET,OP-AMP;LOW OFFSET; ACCEL>BIPOLAR,OP-AMP;VO	1.0	D	120	EA	100.0			Y
1	283500200	BIPOLAR,OP-AMP;VOLTAGE F CAP .001UF,10%,100V,SM12	2.0	D	120	EA	100.0			Y
1	283500400	MLC;1000PF,10%,50V,NPO,1 .1UF,10%,25V 13 REEL/10K	12.0	D	100	EA	100.0			Y
1	283500400	MLC;0.1UF,10%,25V,X7R,12 .1UF,10%,25V 13 REEL/10K	4.0	D	120	EA	100.0			Y
1	283501600	MLC;0.1UF,10%,25V,X7R,12 1UF,10%,50V X7R,2225 PKG	1.0	D	120	EA	100.0			Y
1	311501100	MLC;1UF,10%,50V,X7R;0.22 5K OHM,20%,0.2W SMD,5MM	3.0	D	120	EA	100.0			Y
1	321501300	5K OHM,20%,0.2W SMD,5MM 392 OHM 1% 1/8W	1.0	D	100	EA	100.0			Y
1	321501700	THICK FILM;392 OHM,1%,0. 825 OHM,1%,0.125W TAPED	4.0	D	100	EA	100.0			Y
1	321501700	THICK FILM;825 OHM,1%,0. 825 OHM,1%,0.125W TAPED	2.0	D	120	EA	100.0			Y
1	321501800	THICK FILM;825 OHM,1%,0. 1K,1%,0.125W RESISTOR	1.0	D	100	EA	100.0			Y
1	321501800	THICK FILM;1.0K OHM,1%,0 1K,1%,0.125W RESISTOR	2.0	D	120	EA	100.0			Y
1	321502300	THICK FILM;1.0K OHM,1%,0 2.74K,1%,0.125W,1206 8MM	1.0	D	100	EA	100.0			Y
1	321502300	THICK FILM;2.74K OHM,1%, 2.74K,1%,0.125W,1206 8MM	6.0	D	120	EA	100.0			Y
1	321502400	THICK FILM;2.74K OHM,1%, 3.32K 1% 0.125W T&R	1.0	D	120	EA	100.0			Y
1	321502600	THICK FILM;3.32K OHM,1%, 4.75K,1% FXD RESISTOR	3.0	D	120	EA	100.0			Y
1	321503000	THICK FILM;4.75K OHM,1%, 10.0K,1%,0.125W RESISTOR	1.0	D	100	EA	100.0			Y
1	321503000	THICK FILM;10.0K OHM,1%, 10.0K,1%,0.125W RESISTOR	6.0	D	120	EA	100.0			Y

Level	Component	Description	Qty Per	POU	Op	UM	Fcst	Ph	T	IP
1	321503900	THICK FILM;10.0K OHM,1%, 56.2K OHM 1% 0.125W	4.0	D	120	EA	100.0			Y
1	321504500	THICK FILM;56.2K OHM,1%, RES,FXD FILM,68.1 OHM,1%	9.0	D	100	EA	100.0			Y
1	321504500	THICK FILM;68.1 OHM,1%,0 RES,FXD FILM,68.1 OHM,1%	4.0	D	120	EA	100.0			Y
1	321504700	THICK FILM;68.1 OHM,1%,0 100K,1%,0.125W RESISTOR	2.0	D	120	EA	100.0			Y
1	321504800	THICK FILM;100K OHM,1%,0 332K,1%,0.125W,1206,8MM	1.0	D	120	EA	100.0			Y
1	321504900	THICK FILM;332K OHM,1%,0 1 MEG,1%,0.125W TAPE AND	1.0	D	100	EA	100.0			Y
1	388970702	THICK FILM;1M OHM,1%,0.1 ACCEL>2782:F(S)AMP F(S)AMP	1.0	I	100	EA	100.0			Y

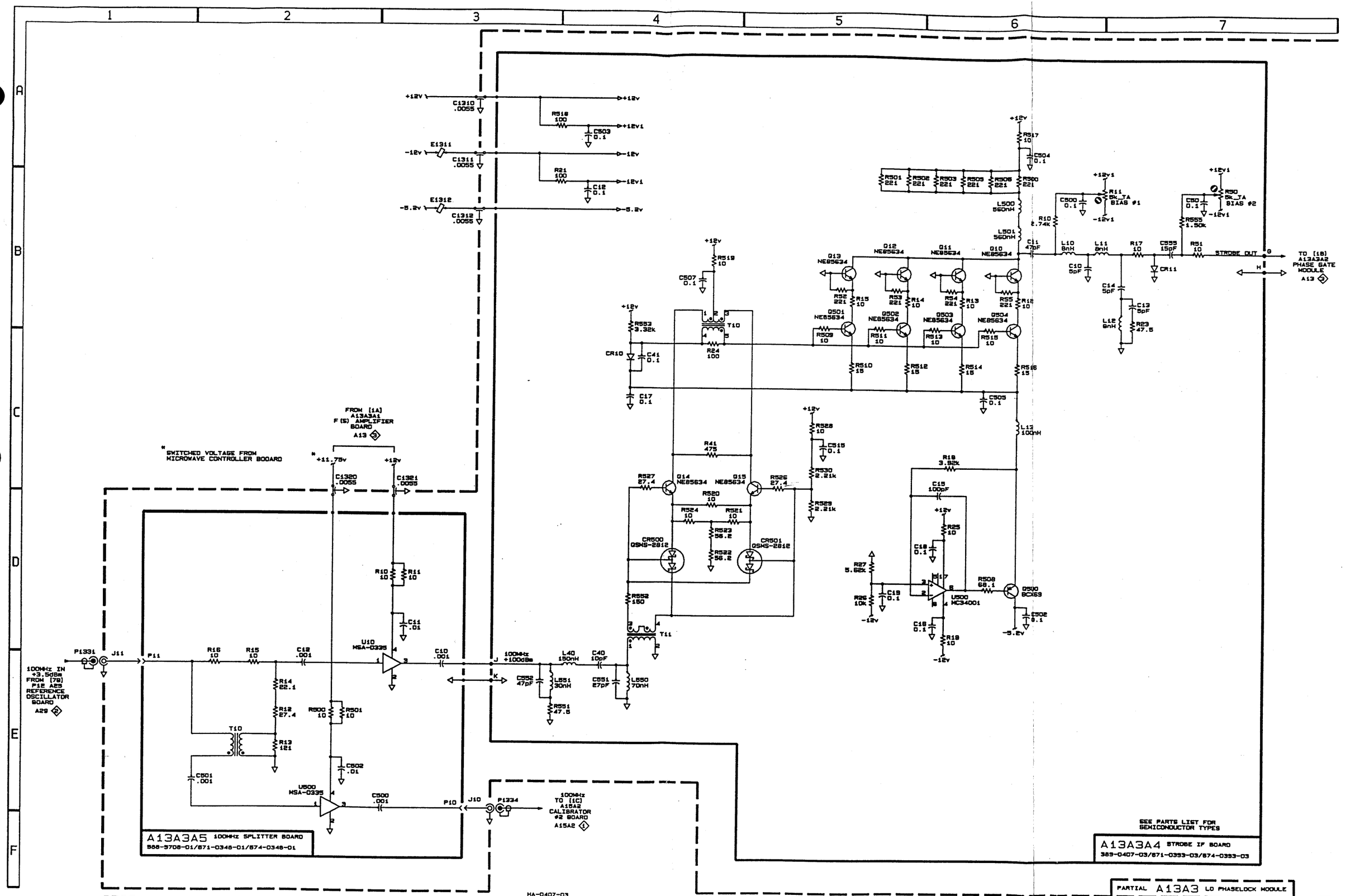
1
2
3
4
5
6
7
A
B
C
D
E
F
+12V
C1310 .0055
R518 100
C503 0.1
+12v1
-12V
E1311
C1311 .0055
R21 100
C12 0.1
-12v1
-5.2V
E1312
C1312 .0055
-5.2v
FROM [1A] A13A3A1 F(S) AMPLIFIER BOARD A13
* SWITCHED VOLTAGE FROM MICROWAVE CONTROLLER BOOARD
+11.75v
C1320 .0055
C1321 .0055
R10 10
R11 10
C11 .01
U10 MSA-0335
P1331
J11
100MHz IN +3.5dBm FROM [7B] P12 A29 REFERENCE OSCILLATOR BOARD A29
P11
R16 10
R15 10
C12 .001
R14 22.1
R12 27.4
R13 121
T10
C501 .001
R500 10
R501 10
C502 .01
U500 MSA-0335
C500 .001
P10
J10
P1334
100MHz TO [1C] A15A2 CALIBRATOR #2 BOARD A15A2
A13A3A5 100MHz SPLITTER BOARD
588-9708-01/671-0348-01/674-0348-01
100MHz +10dBm
L40 150nH
C40 10pF
C552 47pF
L551 30nH
C551 27pF
L550 70nH
R551 47.5
R519 10
C507 0.1
R553 3.32k
CR10
C41 0.1
C17 0.1
R24 100
R41 475
R527 27.4
Q14 NE85634
Q15 NE85634
R526 27.4
R520 10
R524 10
R521 10
R523 56.2
R522 56.2
CR500 QSMS-2812
CR501 QSMS-2812
R552 150
T11
R528 10
C515 0.1
R530 2.21k
R529 2.21k
R517 10
C504 0.1
R501 221
R502 221
R503 221
R509 221
R506 221
R500 221
L500 560nH
L501 560nH
R10 2.74k
C11 47pF
Q13 NE85634
Q12 NE85634
Q11 NE85634
Q10 NE85634
R52 221
R15 10
R53 221
R14 10
R54 221
R13 10
R55 221
R16 10
Q501 NE85634
Q502 NE85634
Q503 NE85634
Q504 NE85634
R509 10
R511 10
R513 10
R515 10
R510 15
R512 15
R514 15
R516 15
C505 0.1
L13 100nH
R18 3.92k
C15 100pF
R25 10
C18 0.1
R27 5.62k
R26 10k
C19 0.1
U500 MC34001
R508 68.1
Q500 BCX69
C502 0.1
R19 10
-5.2v
C500 0.1
R11 5k_TA BIAS #1
C50 0.1
R50 5k_TA BIAS #2
R555 1.50k
L10 8nH
L11 8nH
R17 10
C555 15pF
R51 10
STROBE OUT
TO [1B] A13A3A2 PHASE GATE MODULE A13
C10 5pF
C14 5pF
CR11
C13 5pF
L12 8nH
R23 47.5
SEE PARTS LIST FOR SEMICONDUCTOR TYPES
A13A3A4 STROBE IF BOARD
389-0407-03/671-0393-03/674-0393-03
PARTIAL A13A3 LO PHASELOCK MODULE
2782
MA-0407-03
H-9708-02 REV. MAR 31, 1992
100MHz SPLITTER / STROBE DRIVER
A13

NOTE: DOLLY FOR R50
CHANGED TO ACTUALLY REPRESENT
PINS 1, 2, 3

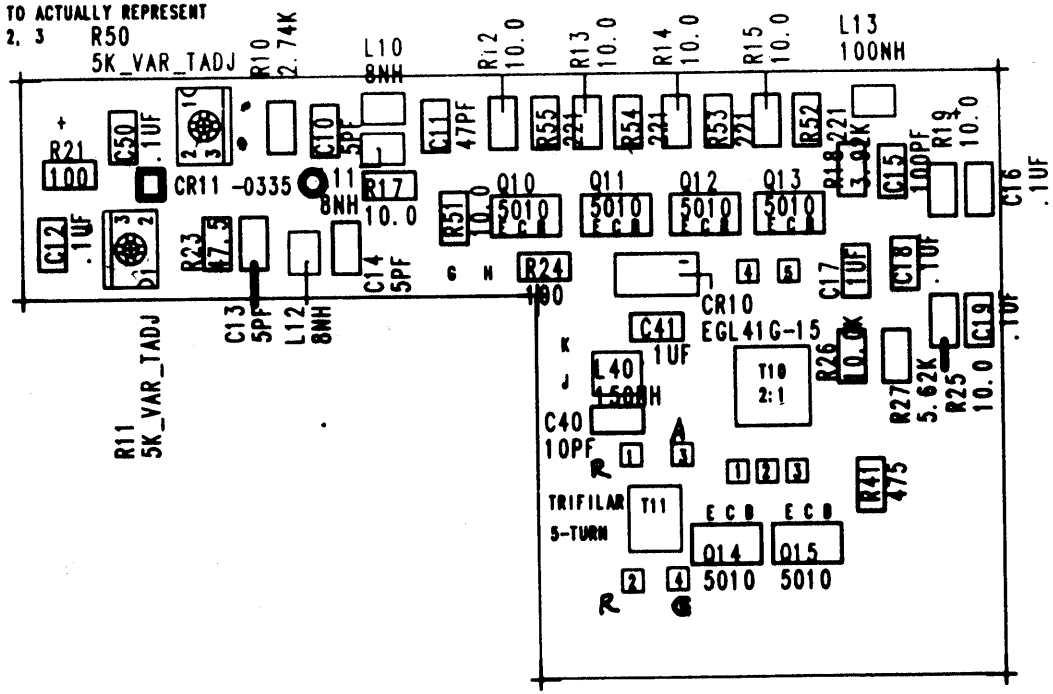

TITLE STROBE IF			SCALE: 2:1
BOARD NUMBER H9-0407-02			
SHEET TITLE ASSEMBLY FRONT			
TEKTRONIX	DATE 3-8-89	LAYER NO.	DOCUMENT NUMBER	REV D
	DESIGNED BY RUTH D		

★ BLACK STAR = POS. FILM

ASSEMBLY DWG. FRONT
BD. # H9-0407-02
BD. NAME STROBE IF
EE: MIKE G. X 1490
ECB: RUTH D. X 2319
DATE 2-27-89
PROJECT NO. 2782 DRAWER NO. 1-6

PICN	REVISION DATE
#39A, #74A	3-7-89

H-0407-02
Ver 'D'

SHAW

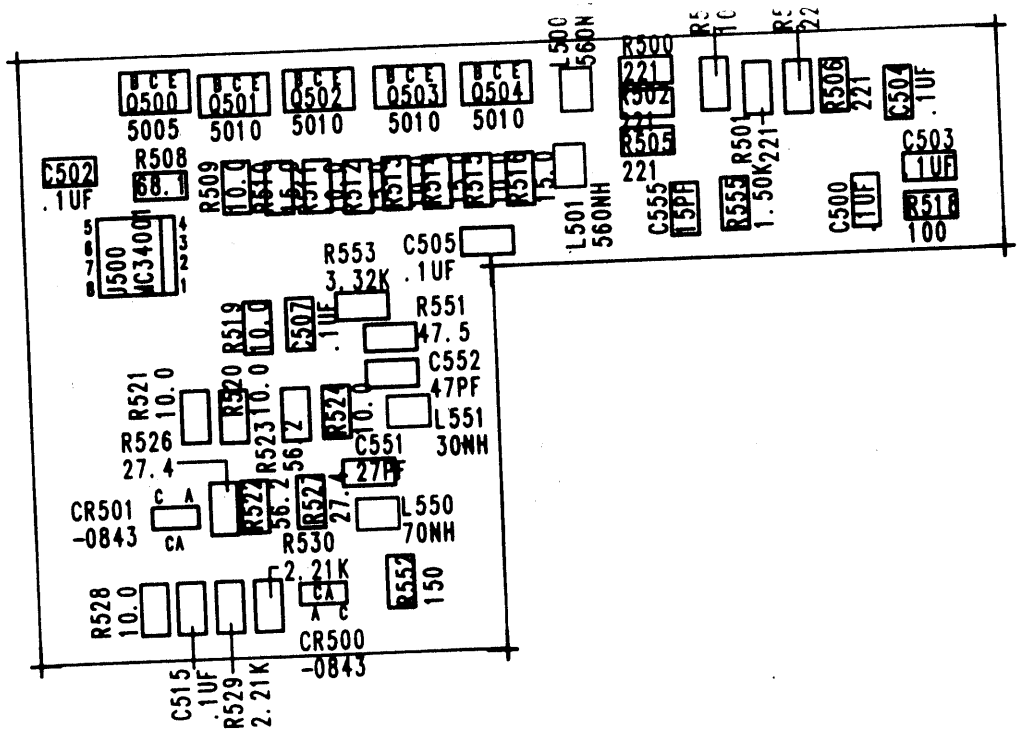

ASSEMBLY DWG. BACK
BD. # H9-0407-02
BD. NAME STROBE IF
EE: MIKE G. X 1490
ECB: RUTH D. X 2319
DATE 2-22-89
DRAWER NO. 1-8 PROJECT NO. 2782

PICN	REVISION DATE
#39A, #74A	3-7-89

TITLE STROBE IF			SCALE: 1:1
BOARD NUMBER H9-0407-02			
SHEET TITLE ASSEMBLY BACK			
TEKTRONIX	DATE 2-8-89	LAYER NO.	DOCUMENT NUMBER	REV D
	DESIGNED BY RUTH D		

BLACK STAR = PCB. FILM

PRINTED [illegible]-Jun-91 02:12 PM TV PRODUCTS [illegible]IL VE

EFFECTIVITY DATE: ALL

I N D E N T E D B I L L S O F M A T E R I A L

PARENT PART: 119296403

2ND LO PHASE LOCK UM: EA PC: 2E ECN:
ERC: SRCE CODE: A TYPE: 1 ABC: A PL: P DATE:

LEVEL	ITEM NO	COMPONENT PART NUMBER/ PART DESCRIPTION	ERC	PRODUCT CODE	S C	T Y	S P	A B	P L	UM	EXTENDED QTY PER	ECN CHG	START DATE
2	0001	120176900 TRANSFORMER, RF		2E	P	1	S	C	P	EA	1		5
		STROBE IF T10											
2	0007	120181800 XFMR, TOROID		2E	P	1	S	C	P	EA	1		5
		100MHZ SPLITTER TRANSFORMER											
2	0003	120184800 TRANSFORMER, RF		2E	P	1	S	C	P	EA	1		5
		STROBE IF T11											
2	0015	131360600 CONN, PLUG, ELEC		2E	P	1	S	A	P	EA	4		
		SNAP-ON MALE											
2	0008	136032803 SOCKET, PIN TERM	B	25	P	1	S	B	P	EA	2		5
		100MHZ SPLITTER 1 P-10 1 P-11											
2	0004	152033501 SEMICOND DVC, DI	C	25	P	1	N	C	P	EA	1		5
		STROBE IF CR11											
2	0009	156268800 IC, LINEAR	*	2E	P	1	S	B	P	EA	2		5
		100MHZ SPLITTER U10, 500											
2	0031	174146500 CA ASSY, SP, ELEC	C	2E	P	8	S	C	P	EA	1		2
		RIBBON CABLE											
2	0011	174183400 WIRE, ELECTRICAL		2E	P	1	S	C	P	FT	0.583000		P
		28AWG BARE WIRE											
2	0010	175218100 CABLE, SP, ELEC	E	2E	P	1	S	C	P	FT	0.083000		P
		CABLE SP ELEC. RED AND WHITE TWIST											
2	0025	210005300 WASHER, LOCK	E	25	X	1		C	P	EA	10		7
2	0100	210136700 WASHER, FLAT	A	2E	X	1		C	P	EA	10		7
2	0016	211016201 SCREW, CAP	*	2E	X	1	S	B	P	EA	1		7
2	0101	211023700 SCREW, CAP	A	2E	X	1	S	C	P	EA	10		7
2	0018	281082500 CAP, FXD, CER DI	H	2E	P	1	S	A	P	EA	10		
		FEEDTHRU CAP											
2	0022	321504400 RES, FXD, FILM	A	2E	P	1	S	C	P	EA	1		5
		R522											

EFFECTIVI DATE: ALL

I N D E N T D B I L L S O F M A T E R I A L

PARENT PART: 119296403 2ND LO PHASE LOCK UM: EA PC: 2E ECN:
ERC: SRCE CODE: A TYPE: 1 ABC: A PL: P DATE: OC

LEVEL	ITEM NO	COMPONENT PART NUMBER/ PART DESCRIPTION	ERC	PRODUCT CODE	S C	T Y	S P	A B	P L	UM	EXTENDED QTY PER	ECN CHG	DATE	START S/
			56.2 OHM STROBE IF											
2	0005	380089100 HOUSING,O LOCK	B	2E	P	1	S	B	P	EA	1			
2	0050	671034703 F(S) AMP,;386-9707-XX WIRED		2E	A	1	S	B	P	EA	1			
3	0084	151500000 TRANSISTOR,SIG	B	2E	P	1	S	B	P	EA	1			P59
			BT3906 Q500											
3	0003	152500000 DIODE,SIG	A	2E	P	1	S	B	P	EA	2			P33
			CR12,13											
3	0008	152500400 DIODE,SIG	A	2E	P	1	S	B	P	EA	2			P59
			BAV99 CR10,11											
3	0081	156500000 IC,LINEAR	*	2E	P	1	S	C	P	EA	1			P59
			LM311 U500											
3	0082	156501900 IC,LINEAR	A	2E	P	1	S	C	P	EA	1			P59
			LM393 U10											
3	0131	156509501 IC,LINEAR	*	2E	P	1	S	B	P	EA	2			P59
			NE5534 U13,501											
3	0085	156527401 MICROCKT,DGTL		2E	P	1	S	A	P	EA	1			P59
			DG211D4 U12											
3	0083	156535200 IC,LINEAR		2E	P	1	S	B	P	EA	1			P59
			LT1056 U11											
3	0002	156547400 IC,LINEAR	*	2E	P	1	S	C	P	EA	1			
			LM310 U14											
3	0087	283500200 CAP,FXD,CER DI	*	2E	P	1	S	B	P	EA	2			P59
			1000PF C14,15											
3	0019	283500400 CAP,FXD,CER DI		2E	P	1	S	A	P	EA	16			722
			.1UF C11,13,16,17,500 C501,502,503,504,505											

MWIF PHASE LOCK

13.8.1 Product Structure by Item Report
TEKTRONIX - T&M - 620 HI-MIX

Level	Component Item	Reference	Description	Qty Per	UM	Op Ph	SC	Iss	Start Eff	End Eff	Scrap	LTO
T	119296404		2ND LO PHASE LOCK 2ND LO PHASE LOCK		EA							
1	120176900		TRANSFORMER,RF 2-1 CENTER TAPPED 5234	1.0	EA	100						
1	120181800		XFMR,TOROID 5 TURNS,BIFILAR Rev: A 5234	1.0	EA	100						
1	120184800		TRANSFORMER,RF 16UH, +/-30%, TOROID, TR 5234	1.0	EA	100						
1	131360600		CONN,PLUG,ELEC SMB,MALE,STR,REAR PNL MT Rev: A	4.0	EA	100						
1	136032803		SOCKET,CONTACT PCB,;FEMALE,RTANG,DESCRE Rev: B 5234	2.0	EA	100						
1	152033501		SEMICOND DVC,DI SRD,SI,35V,1PF,DO-35 Rev: C 5234	1.0	EA	100						
1	156268800		IC,LINEAR BIPOLAR,AMPLIFIER;MICROW 5234	2.0	EA	100						
	174146500		CA ASSY,SP,ELEC MWIF HARNESS Rev: C 206A	1.0	EA	100						
1	174183400		WIRE,ELECTRICAL 28 AWG SOLID BARE,TIN PL P83A	0.583	FT	100						
1	175218100		CABLE,SP,ELEC 32 AWG,2-N & 9-N,TWISTED Rev: E P85A	0.083	FT	100						
1	210005300		WASHER,LOCK #2 SPLIT,0.02 THK STL C Rev: E 74031	11.0	EA	100		no				
1	210136700		WASHER,FLAT 0.093 ID X 0.158 OD X 0. Rev: A 74031	11.0	EA	100		no				
1	211023700		SCREW,CAP 2-56 X 0.25,HEX SKT,STL Rev: A 74031	11.0	EA	100		no				
1	281082500		CAP,FXD,CER DI 0.005UF,+100-0%,100V Rev: H	10.0	EA	100						

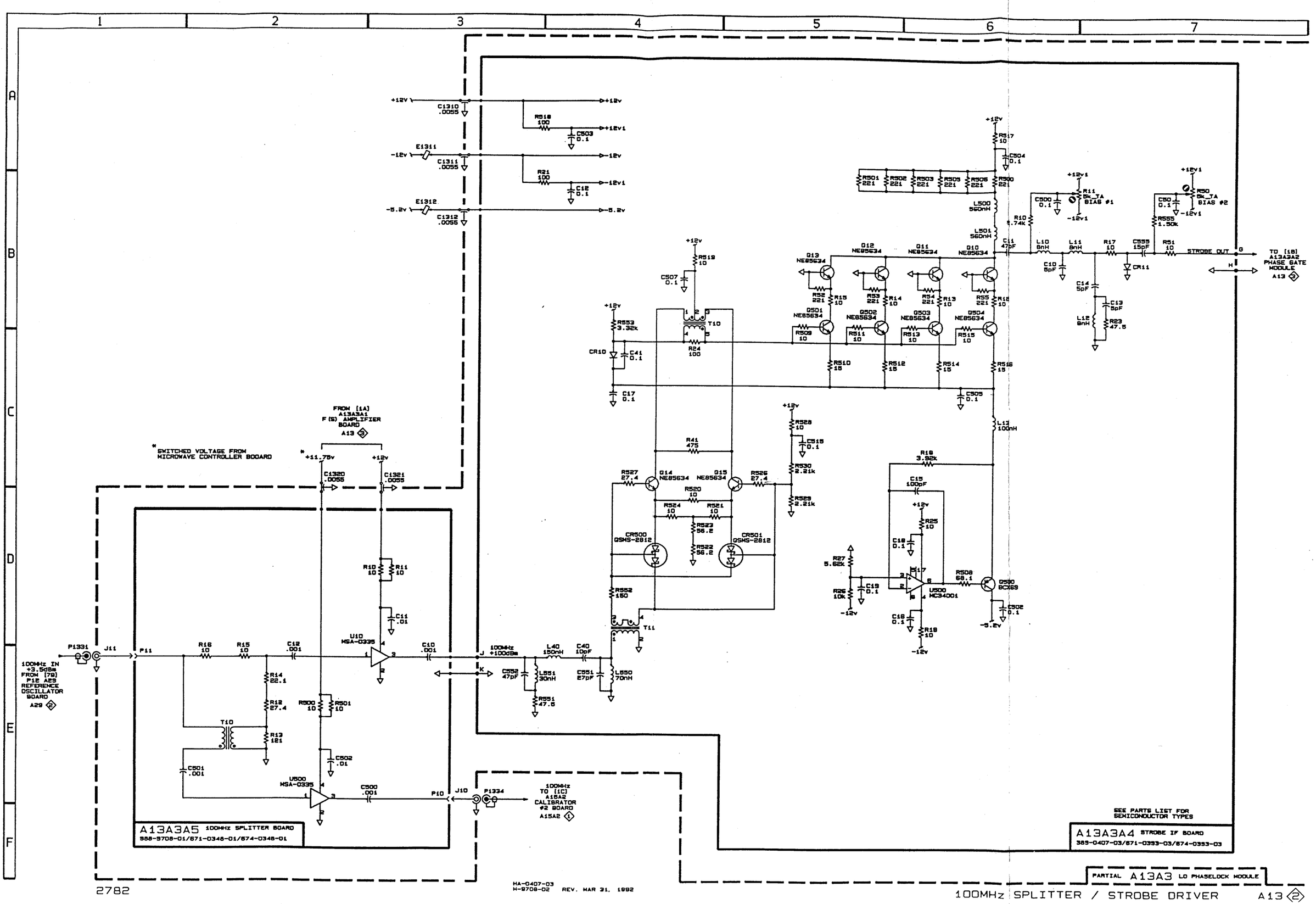
1
2
3
4
5
6
7
A
B
C
D
E
F
+12V
C1310 .0055
R518 100
C503 0.1
+12V1
-12V
E1311
C1311 .0055
R21 100
C12 0.1
-12V1
-5.2V
E1312
C1312 .0055
-5.2V
FROM [1A] A13A3A1 F (S) AMPLIFIER BOARD A13 3
* SWITCHED VOLTAGE FROM MICROWAVE CONTROLLER BOARD
* +11.75V
C1320 .0055
C1321 .0055
R10 10
R11 10
C11 .01
U10 MSA-0335
P1331
J11
P11
100MHz IN +3.5dBm FROM [7B] P1E A29 REFERENCE OSCILLATOR BOARD A29 2
R16 10
R15 10
C12 .001
R14 22.1
R12 27.4
R13 121
T10
C501 .001
R500 10
R501 10
C502 .01
U500 MSA-0335
C500 .001
P10
J10
P1334
100MHz TO [1C] A15A2 CALIBRATOR #2 BOARD A15A2 1
A13A3A5 100MHz SPLITTER BOARD
388-9708-01/671-0348-01/674-0348-01
J
K
100MHz +100dBm
L40 150nH
C40 10pF
C552 47pF
L551 30nH
R551 47.5
C551 27pF
L550 70nH
+12V
R519 10
C507 0.1
R553 3.32k
CR10
C41 0.1
C17 0.1
T10
R24 100
R552 150
T11
R527 27.4
Q14 NE85634
Q15 NE85634
R526 27.4
R41 475
R520 10
R524 10
R521 10
R523 56.2
R522 56.2
CR500 QSMS-2812
CR501 QSMS-2812
R528 10
C515 0.1
R530 2.21k
R529 2.21k
Q13 NE85634
Q12 NE85634
Q11 NE85634
Q10 NE85634
R52 221
R15 10
R53 221
R14 10
R54 221
R13 10
R55 221
R16 10
Q501 NE85634
Q502 NE85634
Q503 NE85634
Q504 NE85634
R509 10
R511 10
R513 10
R515 10
R510 15
R512 15
R514 15
R516 15
C505 0.1
R17 10
C504 0.1
R501 221
R502 221
R503 221
R509 221
R506 221
R500 221
L500 560nH
L501 560nH
R10 4.74k
C1 47pF
L10 8nH
L11 8nH
R17 10
C555 15pF
R51 10
STROBE OUT
G
H
TO [1B] A13A3A2 PHASE GATE MODULE A13 3
C10 5pF
C14 5pF
C13 5pF
L12 8nH
R23 47.5
CR11
+12V1
C500 0.1
R11 5k_TA BIAS #1
-12V1
C50 0.1
R50 5k_TA BIAS #2
R555 1.50k
L13 100nH
R19 3.92k
C15 100pF
R25 10
C18 0.1
R27 5.62k
R26 10k
C19 0.1
U500 MC34001
R508 68.1
Q500 BC169
C502 0.1
C16 0.1
R18 10
SEE PARTS LIST FOR SEMICONDUCTOR TYPES
A13A3A4 STROBE IF BOARD
389-0407-03/671-0393-03/674-0393-03
PARTIAL A13A3 LO PHASELOCK MODULE
HA-0407-03
H-9708-02 REV. MAR 31, 1992
2782
100MHz SPLITTER / STROBE DRIVER
A13 2

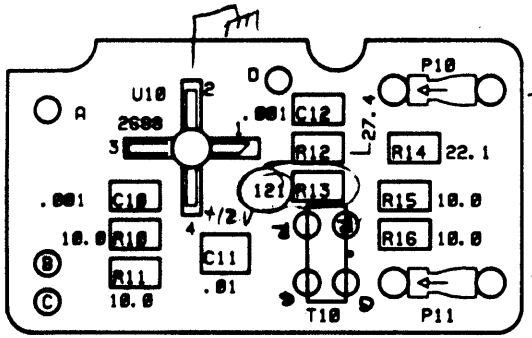

ASSEMBLY DRAWING FRONT
BD# H-9708-01
BD NAME 100 MHZ SPLITTER
EE JOE T X 1870
ECB RUTH D X 2319
DATE 12/12/88 PROJECT#
DRAWER # 2-4 2782

E C B	REVISION DATE

TITLE 100 MHZ SPLITTER				SCALE 2X
BD. NUMBER H-9708-01				
SHEET TITLE FRONT ASSEMBLY				
TEKTRONIX	DATE 12/12/88	LAYER NO.	DOCUMENT NO. TK28C-2	REV C
	DESIGNED BY RD			

BLACK STAR - POS FILM

DIGITIZED BY SYNERTECH, INC
684-1641 D1 L 8

TEKTRONIX	DATE 12\12\88	LAYER NO.	DOCUMENT NO.	REV
	DESIGNED BY RD		TK280-S	C
SHEET TITLE REAR ASSEMBLY (REAR VIEW)				
BD. NUMBER H-9708-01				SCALE 1X
TITLE 100 MHZ SPLITTER				

BLACK STAR - POS FILM

DIGITIZED BY SYNERTECH, INC
584-1641 01 L 7

EFFECTIVI DATE: ALL

INDENT BILLS OF MATERIAL

PARENT PART: 119296403 2ND LO PHASE LOCK UM: EA PC: 2E ECN:
ERC: SRCE CODE: A TYPE: 1 ABC: A PL: P DATE: 00

LEVEL	ITEM NO	COMPONENT PART NUMBER/ PART DESCRIPTION	ERC	PRODUCT CODE	S C	T Y	S P	A B	P L	UM	EXTENDED QTY PER	ECN CHG	START DATE	S/
3	0014	321504700 RES,FXD,FILM	R515,516,28 A	2E	P	1	S	C	P	EA	2			
3	0015	321504800 RES,FXD,FILM	100K R18,37 A	2E	P	1	S	C	P	EA	1			
3	0031	321504900 RES,FXD,FILM	332K R22 A	2E	P	1	S	C	P	EA	1			P59
3	0050	388970702 F(S)AMP	1M R510 D	2E	R	1	S	C	P	EA	1			322
2	0080	674034801 388-9708-XX MACH INSERTED		2E	A	1		C	P	EA	1			523
3	0005	283500200 CAP,FXD,CER DI	100MHZ SPLITTER *	2E	P	1	S	B	P	EA	4			
3	0006	283507000 CAP,FXD,CER DI	.001UF C10,12,500,501	2E	P	1	S	C	P	EA	2			
3	0001	321500000 RES,FXD,FILM	.01UF C11,502 C	2E	P	1	S	B	P	EA	6			
3	0002	321500400 RES,FXD,FILM	10.0 OHM R10,11,15,16,500 R501 B	2E	P	1	S	C	P	EA	1			
3	0003	321500500 RES,FXD,FILM	22.1 OHM R14 B	2E	P	1	S	C	P	EA	1			
3	0030	321500700 RES,FXD,FILM	27.4 OHM R12 B	2E	P	1	S	C	P	EA	1			243
3	0009	388970801 100MHZ SPLITTER/AMP	121 OHM R13 C	2E	R	1	S	C	P	EA	1			322
2	0006	674039302 388-9709-XX MACH INSERTED		2E	A	1		B	P	EA	1			523
3	0036	108500100 COIL,RF	STROBE IF A	2E	P	1	S	B	P	EA	1			P93

Parent Item	Description	UM	Eff Date	Levels	Output
674034801	ACCEL>2782/84:	EA	10/23/95		b471np02

Level	Component	Description	Qty Per	POU	Op	UM	Fcst	Ph	T	IP
1	283500200	CAP .001UF,10%,100V,SM12 MLC;1000PF,10%,50V,NPO,1	2.0	D	100	EA	100.0			Y
1	283500200	CAP .001UF,10%,100V,SM12 MLC;1000PF,10%,50V,NPO,1	2.0	D	120	EA	100.0			Y
1	283507000	CAP,FXD,CER DI;0.01UF,10 MLC;0.01UF,10%,200V,X7R,	1.0	D	100	EA	100.0			Y
1	283507000	CAP,FXD,CER DI;0.01UF,10 MLC;0.01UF,10%,200V,X7R,	1.0	D	120	EA	100.0			Y
1	321500000	10 OHM,1% FXD RESISTOR THICK FILM;10 OHM,1%,0.1	2.0	D	100	EA	100.0			Y
1	321500000	10 OHM,1% FXD RESISTOR THICK FILM;10 OHM,1%,0.1	4.0	D	120	EA	100.0			Y
1	321500400	22.1 OHM 1% 0.125W THICK FILM;22.1 OHM,1%,0	1.0	D	120	EA	100.0			Y
1	321500500	27.4 OHM,1%,0.125W RESIS THICK FILM;27.4 OHM,1%,0	1.0	D	120	EA	100.0			Y
1	321500700	121 OHM 1% 0.125W T&R THICK FILM;121 OHM,1%,0.	1.0	D	120	EA	100.0			Y
1	388970801	ACCEL>2782/84:100MHZ SP 100MHZ SPLITTER/AMP	1.0	I	100	EA	100.0			Y

MWIF PHASE LOCK

13.8.1 Product Structure by Item Report
TEKTRONIX - T&M - 620 HI-MIX

Date: 01/07/94
Time: 08:40:49

Level	Component Item	Reference	Description	Qty Per	UM	Op	Ph	SC	Iss	Start Eff	End Eff	Scrap	LTO
	119296404		2ND LO PHASE LOCK 2ND LO PHASE LOCK		EA								
1	120176900		TRANSFORMER,RF 2-1 CENTER TAPPED 5234	1.0	EA	100							
1	120181800		XFMR,TOROID 5 TURNS,BIFILAR Rev: A 5234	1.0	EA	100							
1	120184800		TRANSFORMER,RF 16UH, +/-30%, TOROID, TR 5234	1.0	EA	100							
1	131360600		CONN,PLUG,ELEC SMB,MALE,STR,REAR PNL MT Rev: A	4.0	EA	100							
1	136032803		SOCKET,CONTACT PCB,;FEMALE,RTANG,DESCRE Rev: B 5234	2.0	EA	100							
1	152033501		SEMICOND DVC,DI SRD,SI,35V,1PF,DO-35 Rev: C 5234	1.0	EA	100							
1	156268800		IC,LINEAR BIPOLAR,AMPLIFIER;MICROW 5234	2.0	EA	100							
	174146500		CA ASSY,SP,ELEC MWIF HARNESS Rev: C 206A	1.0	EA	100							
1	174183400		WIRE,ELECTRICAL 28 AWG SOLID BARE,TIN PL P83A	0.583	FT	100							
1	175218100		CABLE,SP,ELEC 32 AWG,2-N & 9-N,TWISTED Rev: E P85A	0.083	FT	100							
1	210005300		WASHER,LOCK #2 SPLIT,0.02 THK STL C Rev: E 74031	11.0	EA	100			no				
1	210136700		WASHER,FLAT 0.093 ID X 0.158 OD X 0. Rev: A 74031	11.0	EA	100			no				
1	211023700		SCREW,CAP 2-56 X 0.25,HEX SKT,STL Rev: A 74031	11.0	EA	100			no				
1	281082500		CAP,FXD,CER DI 0.005UF,+100-0%,100V Rev: H	10.0	EA	100							

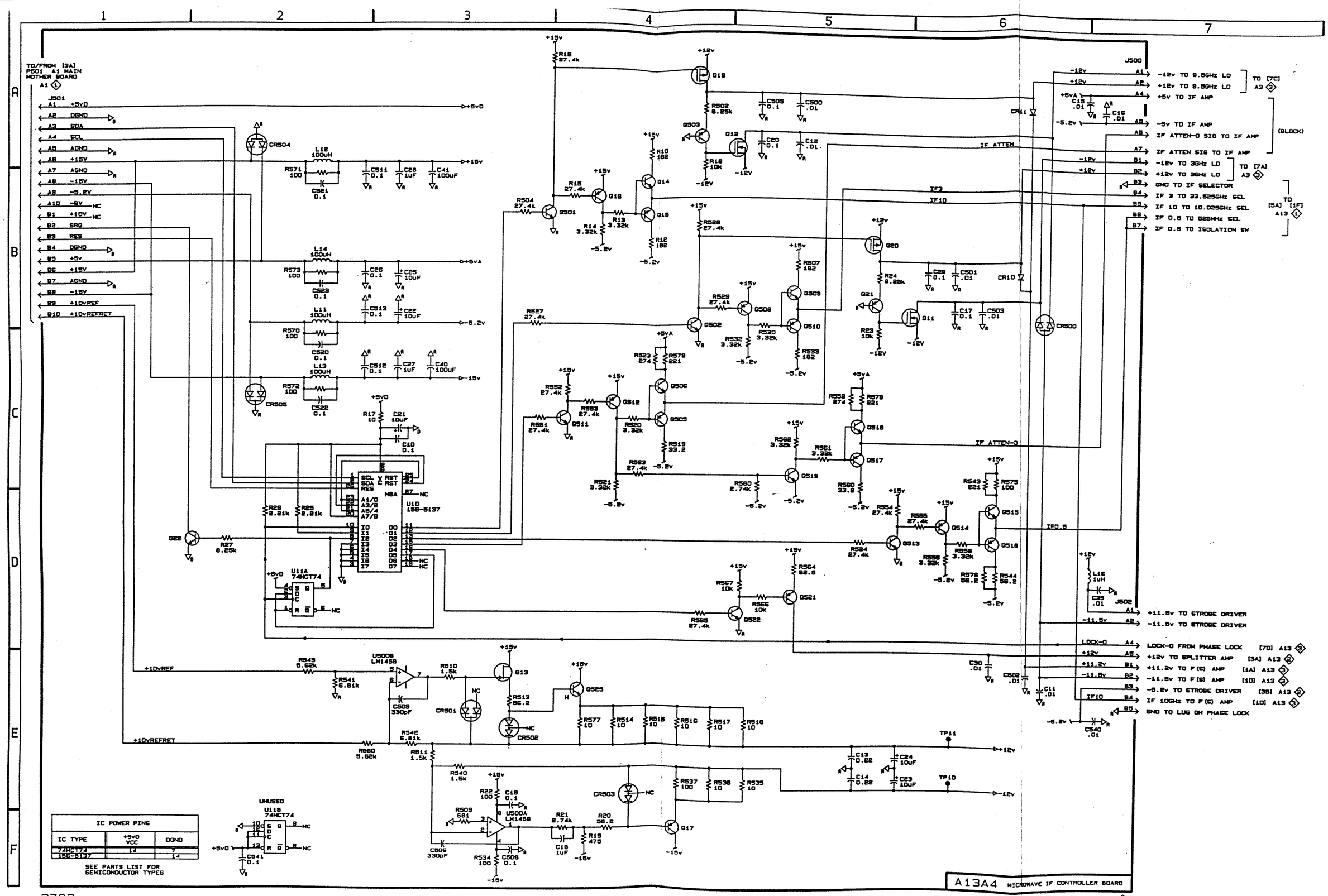

HA-9640-04 REV. MAR 13. 1992

MICROWAVE IF CONTROLLER A13 4

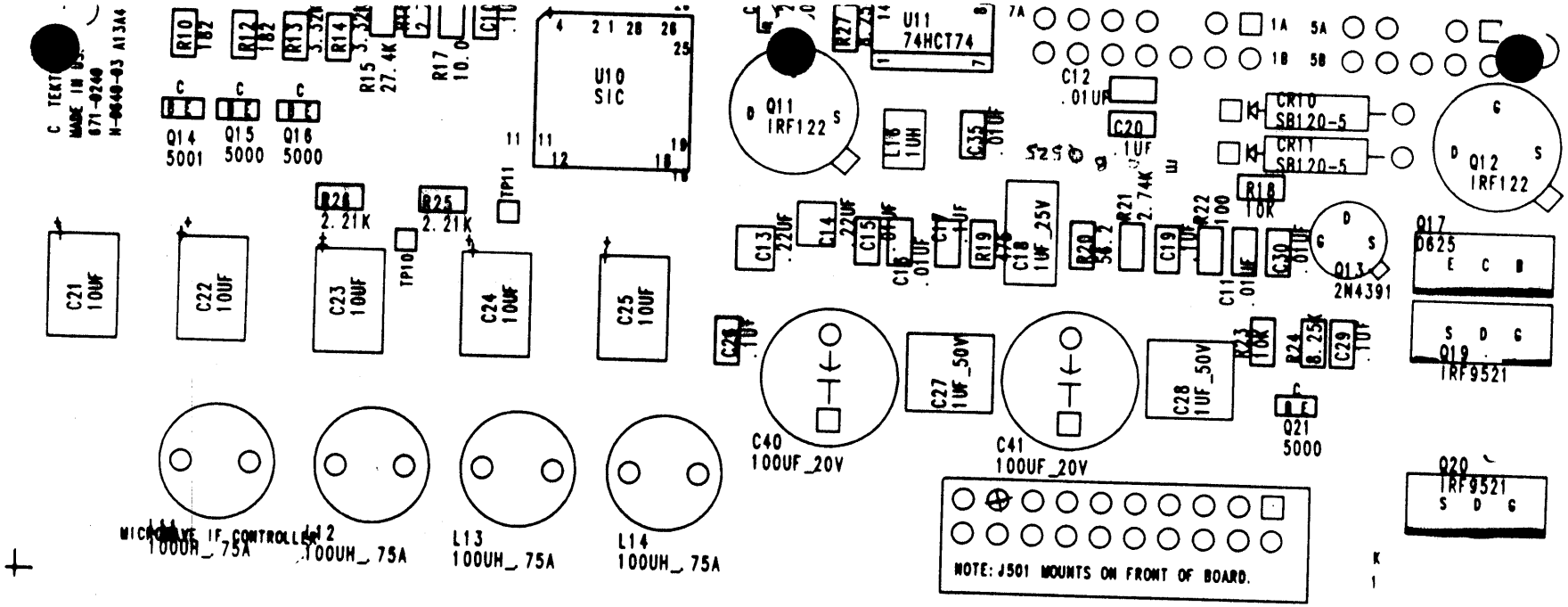

TITLE MICROWAVE IF CONTROLLER			SCALE: 2:1
BOARD NUMBER H-9640-03			
SHEET TITLE FRONT/ASSEMBLY			
TEKTRONIX	DATE 6-28-89	LAYER NO. 1	DOCUMENT NUMBER	REV K
	DESIGNED BY RUTH D.		

BLACK STAR = POS. FILM

ASSEMBLY DWG FRONT
BD. # H-9640-03
BD. NAME M/W IF CONTROLLER
EE: JOE TRUMPS X1871
ECB: RUTH D. X2319
DATE 5-4-89
DRAWER NO. 2-4 PROJECT NO. 2782

PICN	REVISION DATE
93A, 139A, 156A	4-4-89
257A	6-28-89

H-9640-03 VER 'K'

SHAW 2 OCT 89

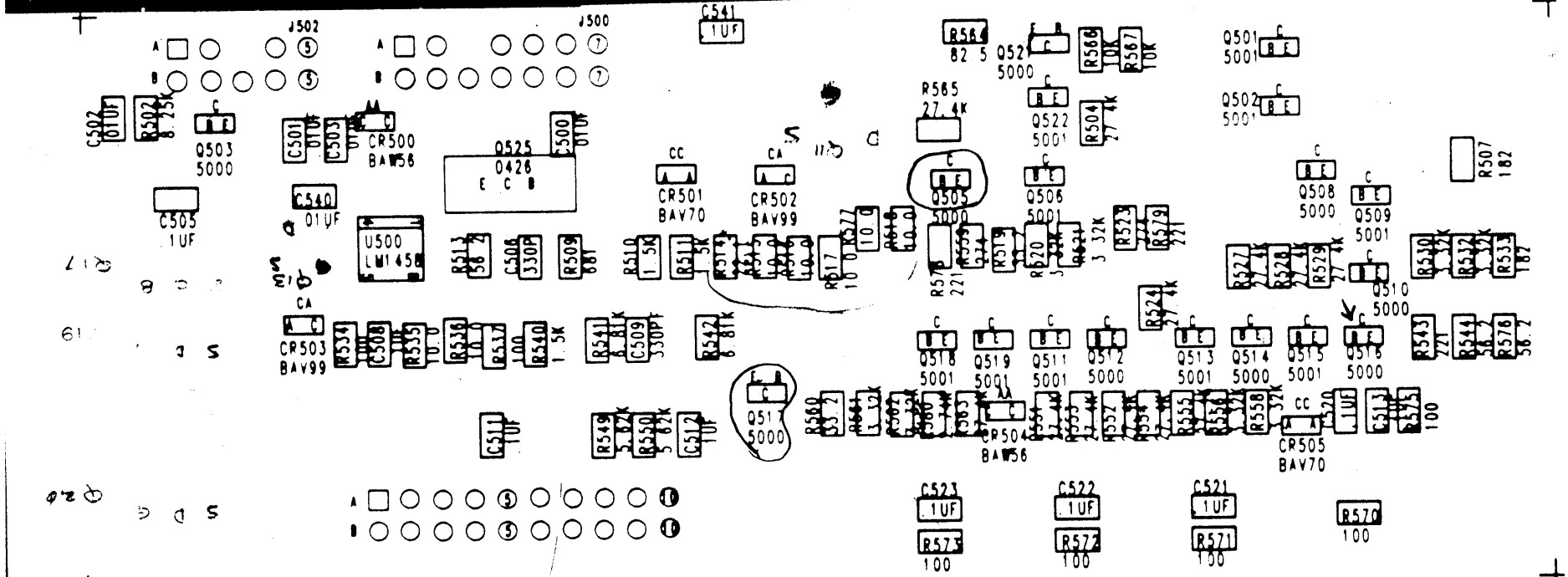

ASSEMBLY DWG. BACK
BD. # H-9840-03
BD. NAME M/W IF CONTROLLER
EE: JOE TRUMPS X1871
ECB: RUTH D. X2319
DATE 8-28-89
DRAWER NO. 2-4 PROJECT NO. 2782

PICN	REVISION DATE
93A, 139A, 156A	4-6-89
257A	8-28-89

TEXTRONIX	DESIGNED BY RUTH D.	LAYER NO.	DOCUMENT NUMBER	REV X
	DATE 8-28-89			
SHEET TITLE BACK ASSEMBLY				
BOARD NUMBER H-9840-03				
TITLE MICROWAVE IF CONTROLLER				SCALE 1:1

BLACK STAR = POS. FILM

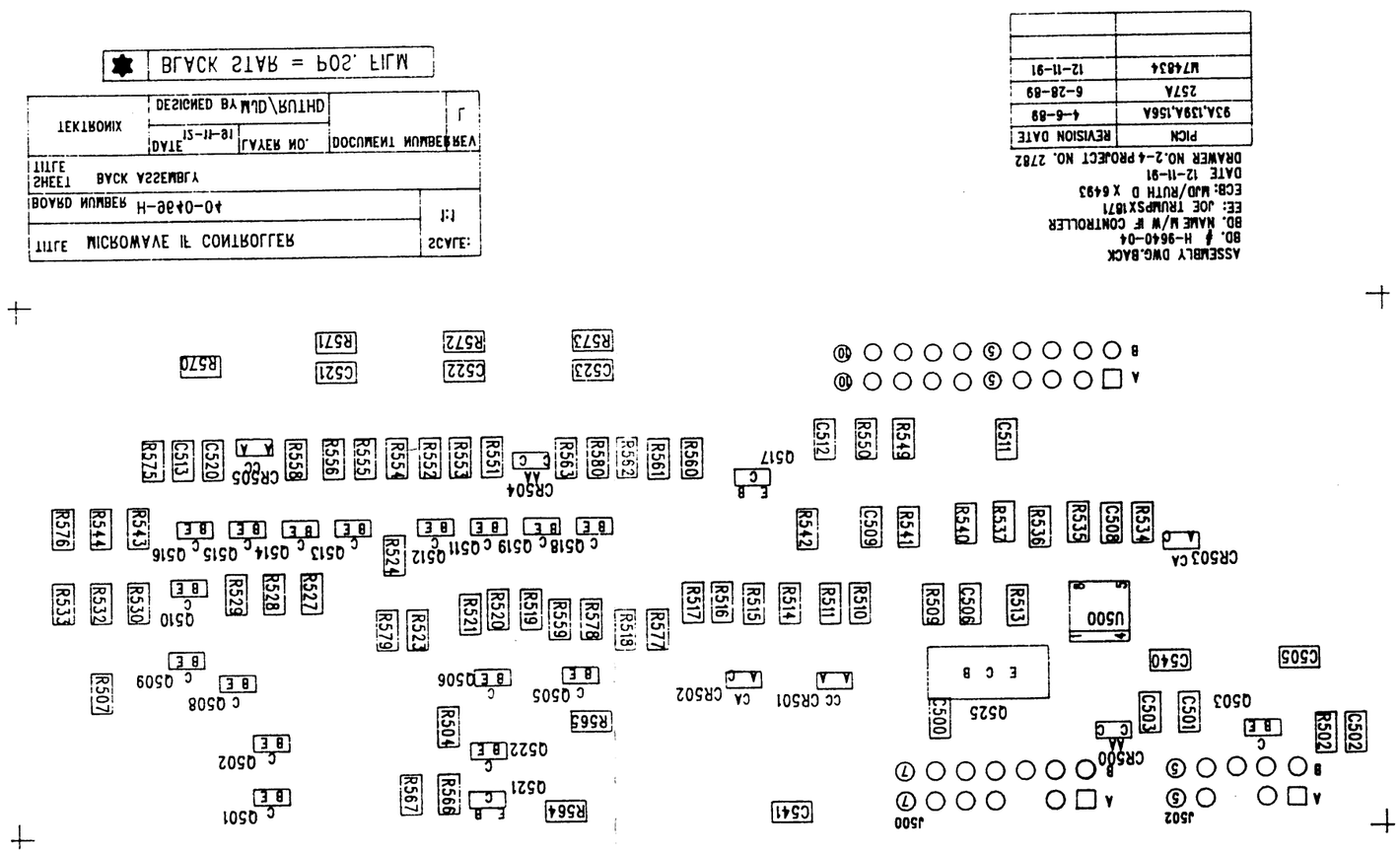

ASSEMBLY DWG.BACK
BD. # H-9640-04
BD. NAME M/W IF CONTROLLER
EE: JOE TRUMPSX1871
ECB: WJD/RUTH D X 6493
DATE 12-11-91
DRAWER NO.2-4 PROJECT NO. 2782

PICN	REVISION DATE
93A,139A,156A	4-6-89
257A	6-28-89
M7463A	12-11-91

TITLE MICROWAVE IF CONTROLLER		SCALE: 1:1	
BOARD NUMBER H-9640-04			
SHEET TITLE BACK ASSEMBLY			
TEKTRONIX	DATE 12-11-91	LAYER NO.	DOCUMENT NUMBER	REV L
	DESIGNED BY WJD\RUTH		

★ BLACK STAR = POS. FILM

MWIF CONTROLLER
REAR
671-0240-03 VER L

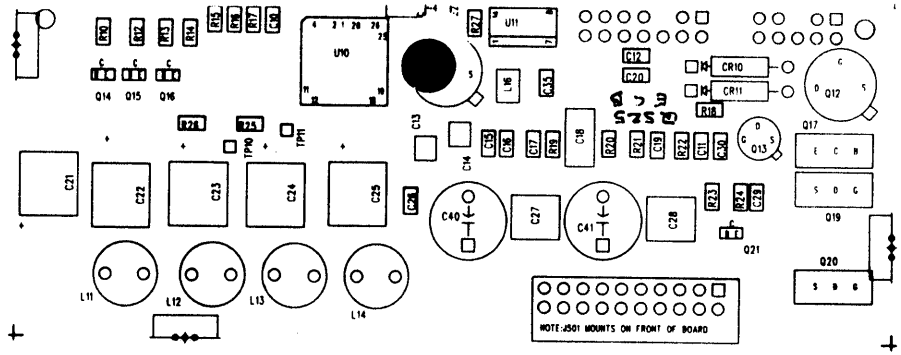

TITLE MICROWAVE IF CONTROLLER	SCALE: 1:1
BOARD NUMBER HA-9640-04	
SHEET TITLE FRONT ASSEMBLY	
TEKTRONIX	DATE 3-3-92 / LAYER NO. / DOCUMENT NUMBER / REV M
	DESIGNED BY RUTH D.

BLACK STAR = POS. FILM

ASSEMBLY DWG. FRONT
BD. # HA-9640-04
BD. NAME M/W IF CONTROLLER
EE:JOE TRUMPS X9071
ECD: MJD/RUTHD X 2319
DATE 3-3-92
DRAWER NO. 2-4 PROJECT NO. 2782

MOD #	REVISION DATE
M74834	12-11-91
M74834	3-3-92

MWIF CONTROLLER REV 'M'

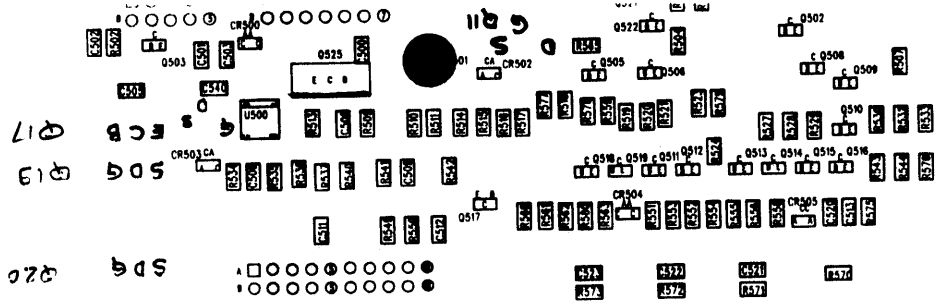

ASSEMBLY DWG.BACK
BD / HA-0640-04
BD NAME W/B W CONTROLLER
EE: JOE THUMPS X1171
ECO: WJD/RUTH D x 2310
DATE 3-3-92
DRAWER NO.2-4 PROJECT NO. 2782

NAME	REVISION DATE
M74834	12-11-91
M74834	3-3-92

TITLE MICROWAVE W CONTROLLER			SCALE: 1:1
BOARD NUMBER HA-0640-04			
SHEET TITLE BACK ASSEMBLY			
REVISIONS REMARKS BY RUTH D.	DATE 3-3-92	LAYER NO.	DOCUMENT NUMBER	REV M

BLACK STAR = POS. FILM

MWIF Controller
Version "N"
Front

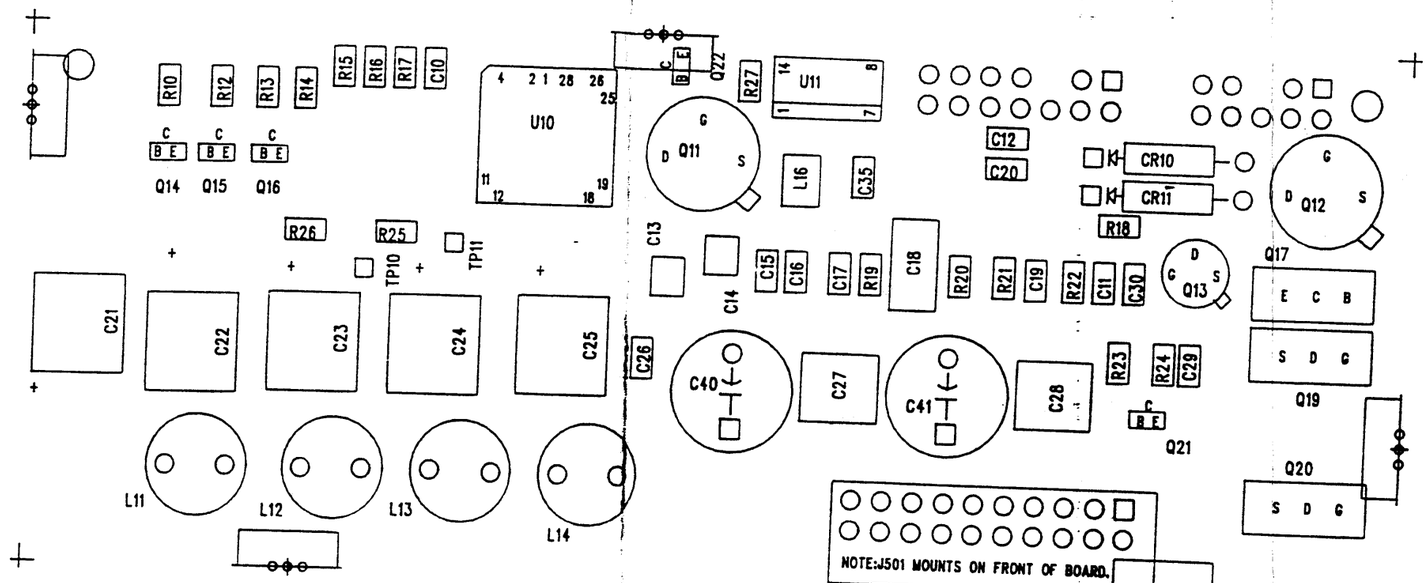

TITLE MICROWAVE IF CONTROLLER				SCALE: 1:1
BOARD NUMBER HB-9640-04				
SHEET TITLE FRONT ASSEMBLY				
TEKTRONIX	DATE 4-10-92	LAYER NO.	DOCUMENT NUMBER	REV N
	DESIGNED BY RUTH D.			

✱ BLACK STAR = POS. FILM

ASSEMBLY DWG. FRONT
BD. # HB-9640-04
BD. NAME M/W IF CONTROLLER
EE: JOE TRUMPS X1871
ECB: MJD/RUTHD X 2319
DATE 4-10-92
DRAWER NO. 2-3 PROJECT NO. 2782

MOD #	REVISION DATE
M74834	12-11-91
M74834	3-3-92
M74834	4-6-92

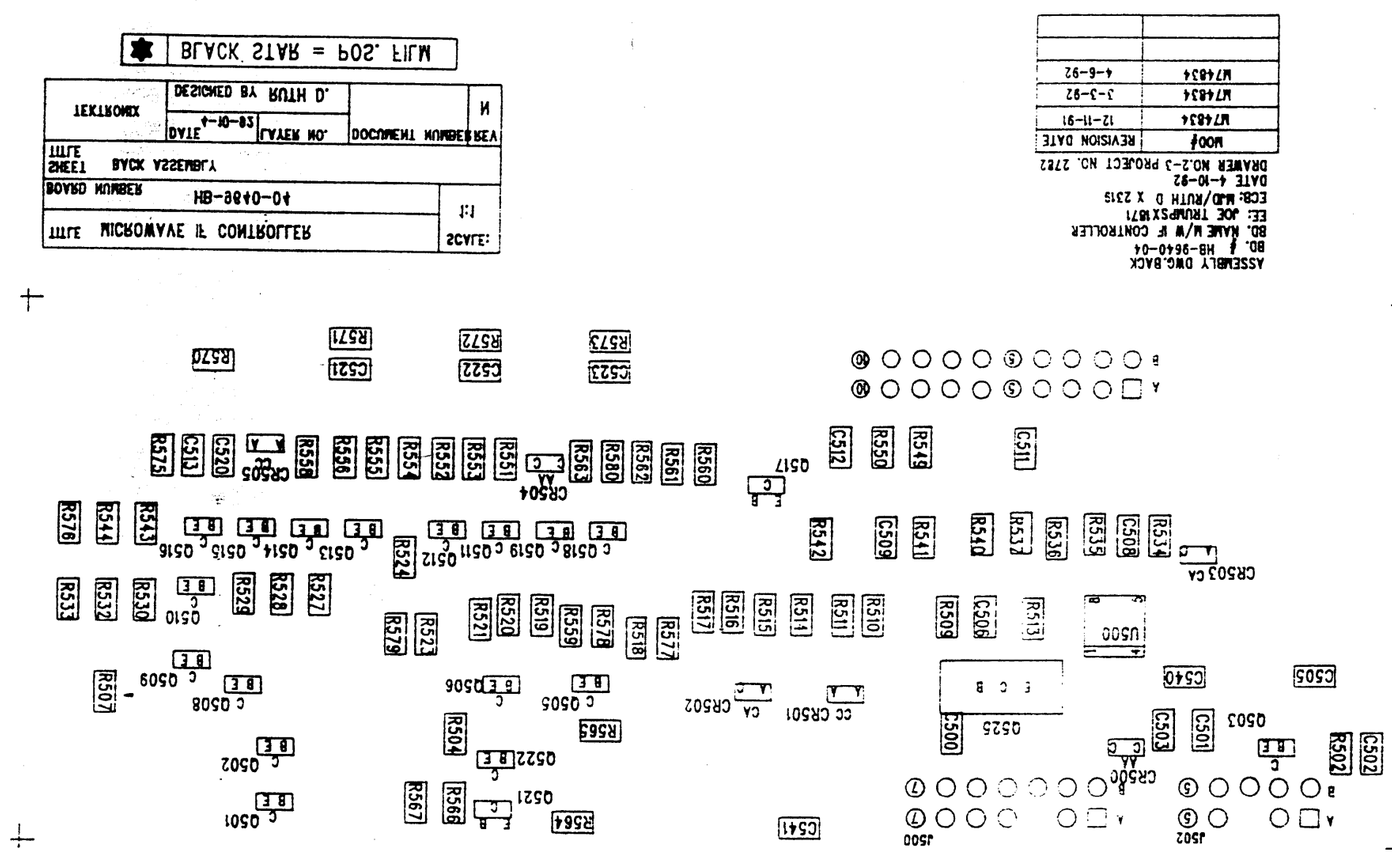

MWIF Controller

Version "N"

Rear

RINTED 19 n-91 02:13 PM TV PRODUCTS BM: VERSIC

FFECTIVITY DATE: ALL

I N D E N T E D B I L L S O F M A T E R I A L

ARENT PART: 671024002 MICROWAVE I/F CONTROLLER,38 UM: EA PC: 2E ECN:
ERC: SRCE CODE: A TYPE: 1 ABC: A PL: P DATE: 00-)

EVEL	ITEM NO	COMPONENT-PART NUMBER/ PART DESCRIPTION	ERC	PRODUCT CODE	S C	T Y	S P	A B	P L	UM	EXTENDED QTY PER	ECN CHG	DATE	START S/N
	0020	108126200 COIL,RF		25	P	1	N	B	P	EA	4			156A
			100UH L11,12,13,14 F	25	X	1	N	B	P	EA	0.611000			5094
	0060	131185700 CONN,HDR												
			PINSTRIP BACK OF BD											
	0003	131335900 CONN,HDR:		2E	P	1	S	C	P	EA	1			
			2X10 R ANGLE J501 G	2E	P	1	N	C	P	EA	1			
	0025	151042600 TRANSISTOR												
			Q525 D	2E	P	1	S	C	P	EA	1			
	0026	151062500 TRANSISTOR												
			Q17 B	2E	P	1	S	C	P	EA	1			
	0042	151102100 TRANSISTOR,SIG												
			2N4391 Q13 F	2E	P	1	S	C	P	EA	2			
	0034	151111900 TRANSISTOR,PWR												
			IRF122 Q11,12 C	2E	P	1	S	B	P	EA	2			
	0028	151112800 TRANSISTOR,PWR												
			IRF9521 Q19,20 D	25	P	1		C	P	EA	2			
	0015	152058100 DIODE,RECT												
			SB120-5 20V CR10,11	25	X	1	S	C	P	FT	0.250000			
	0012	162053800 INSUL SLVG,ELEC												
			Q17-1" Q19-1" Q20-1" F	25	P	1	N	C	P	EA	1			
	0016	283017700 CAP,FXD,CER DI												
			1UF,25V C18 B	25	P	1	S	C	P	EA	2			
	0010	290072100 CAP,FXD,ELCTLT												
			100UF TANTALUM C40,41	2E	A	1		B	P	EA	1			300A
	0009	674024002 388-9640-XX MACH INSERTED,M												
			MWIF CONTROLLER											

EFFECTIVITY DATE: ALL

I N D E N T E D B I L L S O F M A T E R I A L

PARENT PART: 671024002 MICROWAVE I/F CONTROLLER,38 UM: EA PC: 2E ECN:
ERC: SRCE CODE: A TYPE: 1 ABC: A PL: P DATE: 00-

LEVEL	ITEM NO	COMPONENT PART NUMBER/ PART DESCRIPTION	ERC	PRODUCT CODE	S C	T Y	S P	A B	P L	UM	EXTENDED QTY PER	ECN CHG	DATE	START S/N
3	0017	108500000 COIL,RF	B	2E	P	1	S	C	P	EA	1			
		1UH L16												
3	0005	151500000 TRANSISTOR,SIG	B	2E	P	1	S	B	P	EA	12			
		3906 Q15,16,21,503 Q505,508,510,512 Q514,516,517,521												
3	0006	151500100 TRANSISTOR,SIG	B	2E	P	1	S	B	P	EA	12			235A
		3904 Q14,501,502,506,22 Q509,511,513,515 Q518,519,522												
3	0009	152500000 DIODE,SIG	A	2E	P	1	S	B	P	EA	2			257A
		BAV70 CR505,501												
3	0011	152500400 DIODE,SIG	A	2E	P	1	S	B	P	EA	2			257A
		BAV99 CR502,503												
3	0010	152500500 DIODE,SIG	D	2E	P	1	S	C	P	EA	2			
		BAW56 CR500,504												
3	0120	156501701 IC,LINEAR	*	2E	P	1	S	C	P	EA	1			
		1458 U500												
3	0001	156513700 MICROCKT,DGTL	*	2E	P	1	S	B	P	EA	1			
		SIC U10												
3	0063	156514500 IC,DIGITAL	*	2E	P	1	S	C	P	EA	1			P235
		74HTC74 U11												
3	0040	283500300 CAP,FXD,CER DI	*	2E	P	1	S	B	P	EA	11			
		.01UF C11,12,15,16,30,35 C500,501,502,503,540												
3	0024	283500400 CAP,FXD,CER DI		2E	P	1	S	A	P	EA	16			235A
		.1UF C10,17,19,541 C20,26,29,505												

PRINTED [illegible]-Jun-91 02:13 PM [illegible] TV PRODUCTS [illegible]L VER

EFFECTIVITY DATE: ALL

INDENTED BILLS OF MATERIAL

PARENT PART: 671024002 MICROWAVE I/F CONTROLLER,38 UM: EA PC: 2E ECN:

ERC: SRCE CODE: A TYPE: 1 ABC: A PL: P DATE: 0

LEVEL	ITEM NO	COMPONENT PART NUMBER/ PART DESCRIPTION	ERC	PRODUCT CODE	S C	T Y	S P	A B	P L	UM	EXTENDED QTY PER	ECN CHG	DATE	START S
			C508,511,512 C513,520,521,522,523											
3	0007	283501000 CAP,FXD,CER DI	A	2E	P	1	S	B	P	EA	2			
			.22UF C13,14											
3	0015	283501400 CAP,FXD,CER DI		2E	P	1	S	C	P	EA	2			P2
			330PF C506,509											
3	0036	283501600 CAP,FXD,CER DI	B	2E	P	1	S	B	P	EA	2			
			1UF 50V C27,28											
3	0022	290500100 CAP,FXD,ELCTLT	B	2E	P	3	S	B	P	EA	5			
			10UF C21,22,23,24,25											
3	0012	321500000 RES,FXD,FILM	C	2E	P	1	S	B	P	EA	9			P2
			10 OHM R17,515,516,517 R518,535 R536,514,577											
3	0014	321500600 RES,FXD,FILM	B	2E	P	1	S	C	P	EA	8			
			100 OHM R22,534,537,570,571 R572,573,575											
3	0021	321500900 RES,FXD,FILM	B	2E	P	1	S	C	P	EA	4			P2
			182 OHM R10,12,507 R533											
3	0064	321501000 RES,FXD,FILM	B	2E	P	1	S	C	P	EA	3			P2
			221 OHM R543,578,579											
3	0065	321501100 RES,FXD,FILM	B	2E	P	1	S	C	P	EA	2			P2
			274 OHM R523,559											
3	0020	321501400 RES,FXD,FILM	B	2E	P	1	S	C	P	EA	1			15
			475 OHM R19											
3	0043	321501600 RES,FXD,FILM	A	2E	P	1	S	C	P	EA	1			
			681 OHM R509											

EFFECTIVITY DATE: ALL

INDENTED BILLS OF MATERIAL

PARENT PART: 671024002 MICROWAVE I/F CONTROLLER,38 UM: EA PC: 2E ECN:
ERC: SRCE CODE: A TYPE: 1 ABC: A PL: P DATE:

LEVEL	ITEM NO	COMPONENT PART NUMBER/ PART DESCRIPTION	ERC	PRODUCT CODE	S C	T Y	S P	A B	P L	UM	EXTENDED QTY PER	ECN CHG	DATE	START
3	0042	321502000 RES,FXD,FILM	A	2E	P	1	S	C	P	EA	3			P
		1.5K R511,540,510												
3	0023	321502200 RES,FXD,FILM	A	2E	P	1	S	C	P	EA	2			
		2.21K R25,26												
3	0016	321502300 RES,FXD,FILM	A	2E	P	1	S	C	P	EA	2			P
		2.74K R21,580												
3	0032	321502400 RES,FXD,FILM	A	2E	P	1	S	C	P	EA	10			
		3.32K R13,14,520,521 R530,532,556,558,561 R562												
3	0050	321502700 RES,FXD,FILM	A	2E	P	1	S	C	P	EA	2			P
		5.62K R549,550												
3	0051	321502800 RES,FXD,FILM	A	2E	P	1	S	C	P	EA	2			P
		6.81K R541,542												
3	0018	321502900 RES,FXD,FILM	A	2E	P	1	S	C	P	EA	3			P
		8.25K R24,502,27												
3	0019	321503000 RES,FXD,FILM	A	2E	P	1	S	B	P	EA	4			P
		10K R18,23 R566,567												
3	0008	321503500 RES,FXD,FILM	A	2E	P	1	S	C	P	EA	14			
		27.4K R15,16,504,524,527 R528,529,551,552,553 R554,555,563,565												
3	0013	321504400 RES,FXD,FILM	A	2E	P	1	S	C	P	EA	4			P
		56.2 OHM R20,513,576,544												
3	0025	321504600 RES,FXD,FILM	A	2E	P	1	S	C	P	EA	1			
		82.5 OHM R564												
3	0027	321505000	A	2E	P	1	S	C	P	EA	2			

RINTED 19-[illegible]n-91 02:13 PM [illegible]V PRODUCTS BM1[illegible] VERSIC

FFECTIVITY DATE: ALL

I N D E N T E D B I L L S O F M A T E R I A L

ARENT PART: 671024002 MICROWAVE I/F CONTROLLER,38 UM: EA PC: 2E ECN:
ERC: SRCE CODE: A TYPE: 1 ABC: A PL: P DATE: 00-X

EVEL	ITEM NO	COMPONENT PART NUMBER/ PART DESCRIPTION	ERC	PRODUCT CODE	S C	T Y	S P	A B	P L	UM	EXTENDED QTY PER	ECN CHG	DATE	START S/N
		RES,FXD,FILM 33.2 OHM R519,560												
3	0030	388964003 MICROWAVE IF CONTROLLER	C	2E	R	1	S	C	P	EA	1			300A

Revised: January 6, 1992 VER = (L)
Revision:

Item	Quantity	Reference	Part
1	7	C10,C17,C19,C20,C26,C29, C541	0.1, 283-5004-00, .1U
2	11	C11,C12,C15,C16,C30,C35, C500,C501,C502,C503,C540	.01, 283-5003-00, .01UF
3	2	C13,C14	0.22, 283-5010-00, .22UF
4	1	C18	1uF_25V, 283-0177-00, 1UF_25V
5	5	C21,C22,C23,C24,C25	10uF, 290-5039-00, 10UF
6	2	C27,C28	1uF_50V, 283-5016-00, 1UF_50V
7	2	C40,C41	100uF, 290-0721-00, 100UF_20V
8	9	C505,C508,C511,C512,C513, C520,C521,C522,C523	0.1, 283-5004-00, .1UF
9	2	C506,C509	330pF, 283-5014-00, 330P
10	2	CR10,CR11	1N5718, 152-0581-00, SB120-5
11	2	CR500,CR504	BAW56, 152-5005-00, BAW56
12	2	CR501,CR505	BAV70, 152-5000-00, BAV70
13	2	CR502,CR503	BAV99, 152-5004-00, BAV99
14	4	L11,L12,L13,L14	100uH, 108-1262-00, 100UH_.75A
15	1	L16	1uH, 108-5000-00, 1UH
16	2	M1,M2	MH, , PAD100\069
17	3	M3,M4,M5	MH, , PAD250\142
18	3	M6,M7,M8	M1, , SQPAD062\045
19	39	M9,M10,M11,M12,M13,M14, M15,M16,M17,M18,M19,M20, M21,M22,M23,M24,M25,M26, M27,M28,M29,M30,M31,M32, M33,M34,M35,M36,M37,M38, M39,M40,M41,M42,M43,M44, M45,M46,M47	M1, , PAD062\045
20	2	Q11,Q12	IRF122, 151-1119-00, IRF122
21	1	Q13	2N4391, 151-1021-00, 2N4391
22	12	Q14,Q22,Q501,Q502,Q506, Q509,Q511,Q513,Q515,Q518,	BT3904, 151-5001-00, 5001

Item	Quantity	Reference	Part
		Q519,Q522	
23	12	Q15,Q16,Q21,Q503,Q505, Q508,Q510,Q512,Q514,Q516, Q517,Q521	BT3906, 151-5000-00, 5000
24	1	Q17	D45H11, 151-0625-00, 0625
25	2	Q19,Q20	IRF9521, 151-1128-00, IRF9521
26	1	Q525	D44H11, 151-0426-00, 0426
27	4	R10,R12,R507,R533	182, 321-5009-00, 182
28	10	R13,R14,R520,R521,R530, R532,R556,R558,R561,R562	3.32k, 321-5024-00, 3.32K
29	13	R15,R504,R524,R527,R528, R529,R551,R552,R553,R554, R555,R563,R565	27.4k, 321-5035-00, 27.4K
30	1	R16	27.4k, 321-5035-00, 2.74K
31	8	R17,R515,R516,R517,R518, R535,R536,R577	10, 321-5000-00, 10.0
32	4	R18,R23,R566,R567	10k, 321-5030-00, 10K
33	1	R19	475, 321-5014-00, 475
34	4	R20,R513,R544,R576	56.2, 321-5044-00, 56.2
35	2	R21,R580	2.74k, 321-5023-00, 2.74K
36	8	R22,R534,R537,R570,R571, R572,R573,R575	100, 321-5006-00, 100
37	3	R24,R27,R502	8.25k, 321-5029-00, 8.25K
38	2	R25,R26	2.21k, 321-5022-00, 2.21K
39	1	R509	681, 321-5016-00, 681
40	3	R510,R511,R540	1.5k, 321-5020-00, 1.5K
41	1	R514	10, 321-5000-00, 22.1
42	2	R519,R560	33.2, 321-5050-00, 33.2
43	2	R523,R559	274, 321-5011-00, 274
44	2	R541,R542	6.81k, 321-5028-00, 6.81K

Item	Quantity	Reference	Part
45	3	R543,R578,R579	221, 321-5010-00, 221
46	2	R549,R550	5.62k, 321-5027-00, 5.62K
47	1	R564	82.5, 321-5046-00, 82.5
48	2	TP10,TP11	TSTPNT, XXX-XXXX-TP, TSTPNT
49	1	U10	156-5137, 156-5137-00, SIC
50	1	U11	74HCT74, 156-5145-00, 74HCT74
51	1	U500	LM1458, 156-5017-01, LM1458

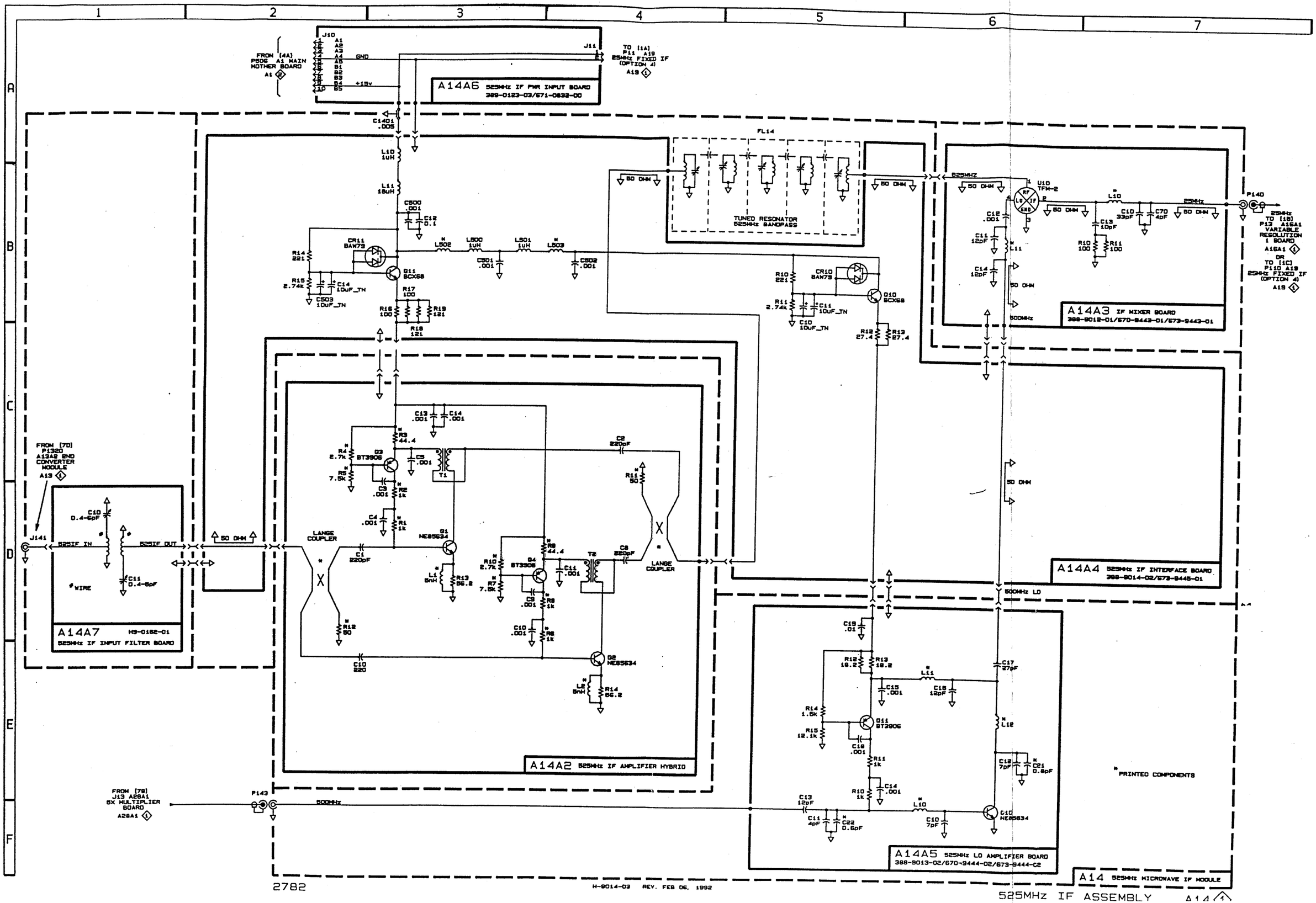
A14A6 525MHz IF PWR INPUT BOARD
389-0123-03/671-0832-00
FROM [4A] P506 A1 MAIN MOTHER BOARD
TO [1A] P11 A19 25MHz FIXED IF (OPTION 4)
TUNED RESONATOR 525MHz BANDPASS
A14A3 IF MIXER BOARD
389-9012-01/670-9443-01/673-9443-01
A14A4 525MHz IF INTERFACE BOARD
389-9014-02/673-9445-01
A14A7 H9-0162-01
525MHz IF INPUT FILTER BOARD
A14A2 525MHz IF AMPLIFIER HYBRID
A14A5 525MHz LO AMPLIFIER BOARD
389-9013-02/670-9444-02/673-9444-02
A14 525MHz MICROWAVE IF MODULE
LANGE COUPLER
FROM [7D] P1320 A13A2 2ND CONVERTER MODULE
FROM [7B] J13 A28A1 5X MULTIPLIER BOARD
PRINTED COMPONENTS
H-9014-03 REV. FEB 06, 1992
525MHz IF ASSEMBLY

2782

678944301	283500000	C13
678944301	283500200	C12
678944301	283500500	C70
678944301	283500800	C11
678944301	283500800	C14
678944301	283501100	C10
678944301	321500600	R10
678944301	321500600	R11
678945801	108501500	L10
678945801	108501500	L11
678945801	108501500	L12
678945801	108501500	L13
678945801	108501500	L14

Parent Item	Description	UM	Eff Date	Levels	Output
673944301	ACCEL>2782:	EA	10/23/95		b471np02

Level	Component	Description	Qty Per	POU	Op	UM	Fcst	Ph	T	IP
1	283500000	10PF,5%,50V NPI,1206 PKG MLC;10PF,5%,50V,NPO,1206	1.0	D	100	EA	100.0			Y
1	283500200	CAP .001UF,10%,100V,SM12 MLC;1000PF,10%,50V,NPO,1	1.0	D	100	EA	100.0			Y
1	283500500	4PF,+/-0.25PF,50V,NPO,12 MLC;4PF,+/-0.25PF,50V,NP	1.0	D	100	EA	100.0			Y
1	283500800	12PF,5%,50V,SMD,T&R MLC;12PF,5%,50V,NPO,1206	2.0	D	100	EA	100.0			Y
1	283501100	33PF,5%,50V NPO,1206 PK MLC;33PF,5%,50V,NPO,1206	1.0	D	100	EA	100.0			Y
1	321500600	100 OHM,1%,0.125W RESIST THICK FILM;100 OHM,1%,0.	2.0	D	100	EA	100.0			Y
1	388901201	ACCEL>2782:IF MIXER IF MIXER	1.0	I	100	EA	100.0			Y

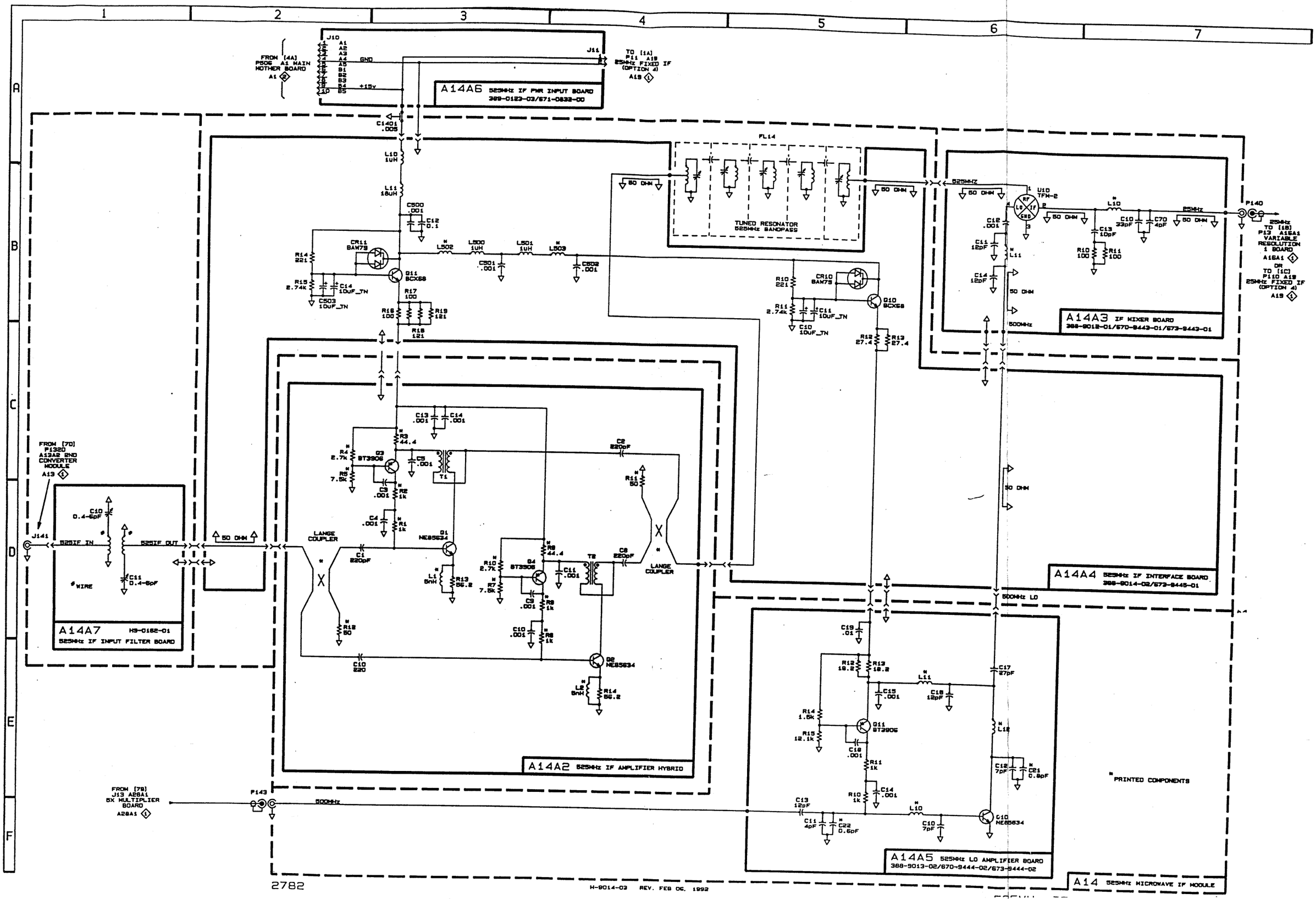
A14A6 525MHz IF PWR INPUT BOARD
389-0123-03/671-0833-00
FROM [4A] P506 A1 MAIN MOTHER BOARD
TO [1A] P11 A19 25MHz FIXED IF (OPTION 4)
TUNED RESONATOR 525MHz BANDPASS
A14A3 IF MIXER BOARD
388-9012-01/670-9443-01/673-9443-01
P140
25MHz TO [1B] P12 A16A1 VARIABLE RESOLUTION 1 BOARD
OR TO [1C] P110 A19 25MHz FIXED IF (OPTION 4)
FROM [7D] P1320 A13A2 BND CONVERTER MODULE
A14A7 H9-0162-01
525MHz IF INPUT FILTER BOARD
LANGE COUPLER
A14A2 525MHz IF AMPLIFIER HYBRID
A14A4 525MHz IF INTERFACE BOARD
388-9014-02/673-9445-01
FROM [7B] J13 A28A1 BX MULTIPLIER BOARD
A14A5 525MHz LO AMPLIFIER BOARD
388-9013-02/670-9444-02/673-9444-02
PRINTED COMPONENTS
A14 525MHz MICROWAVE IF MODULE
2782
H-9014-03 REV. FEB 06, 1992

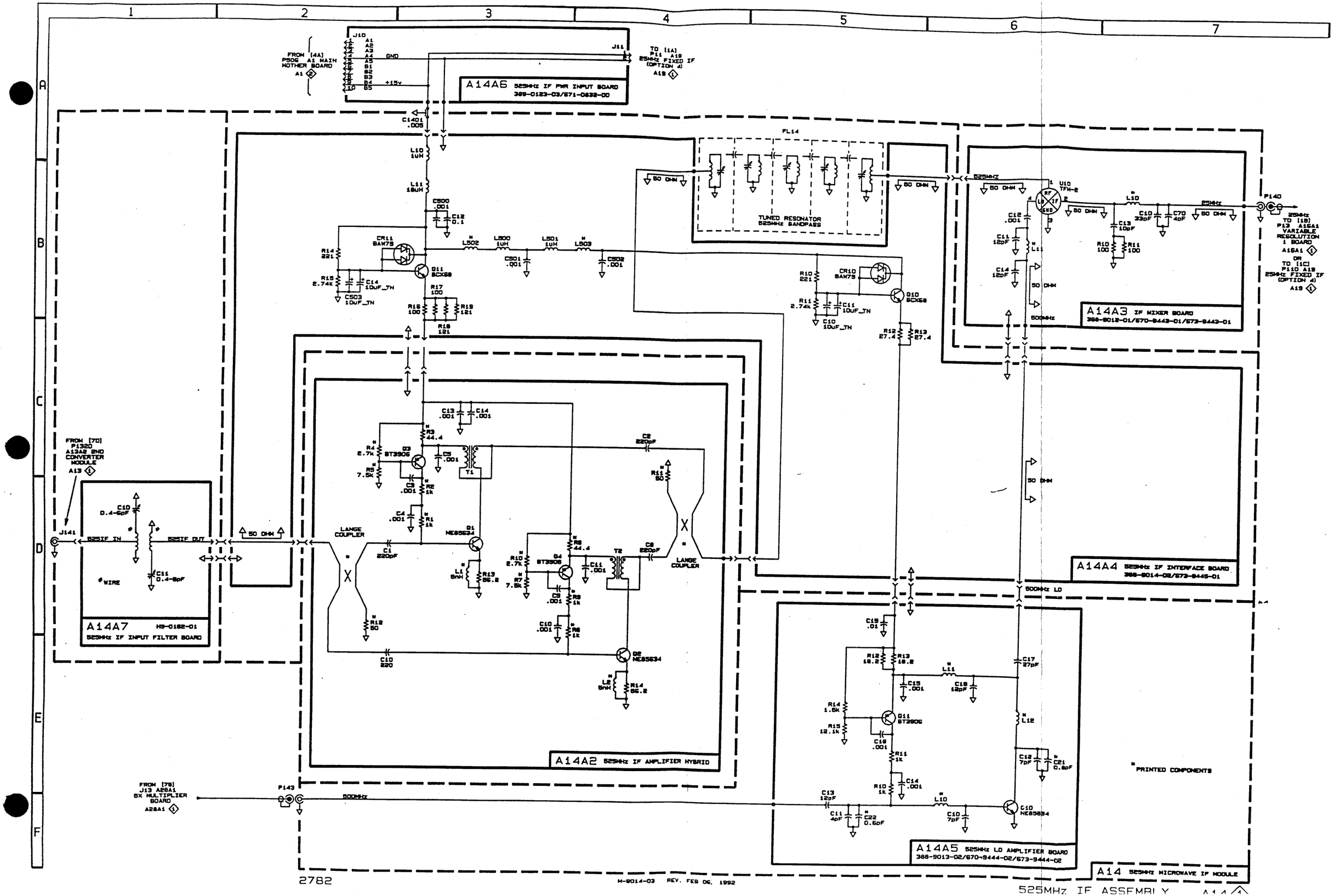

2782

H-9014-03 REV. FEB 06, 1992

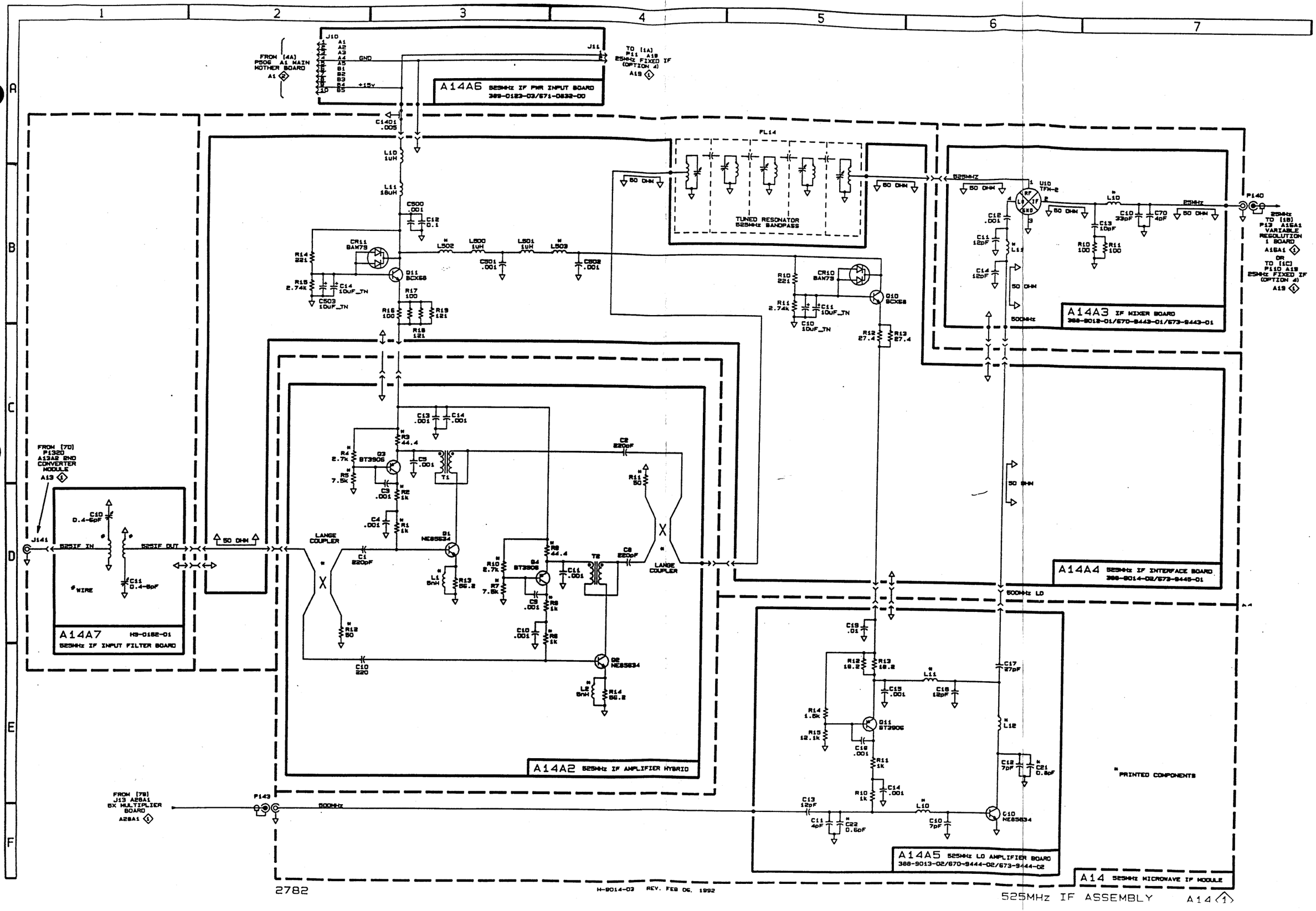

2782

H-9014-03 REV. FEB 06, 1992

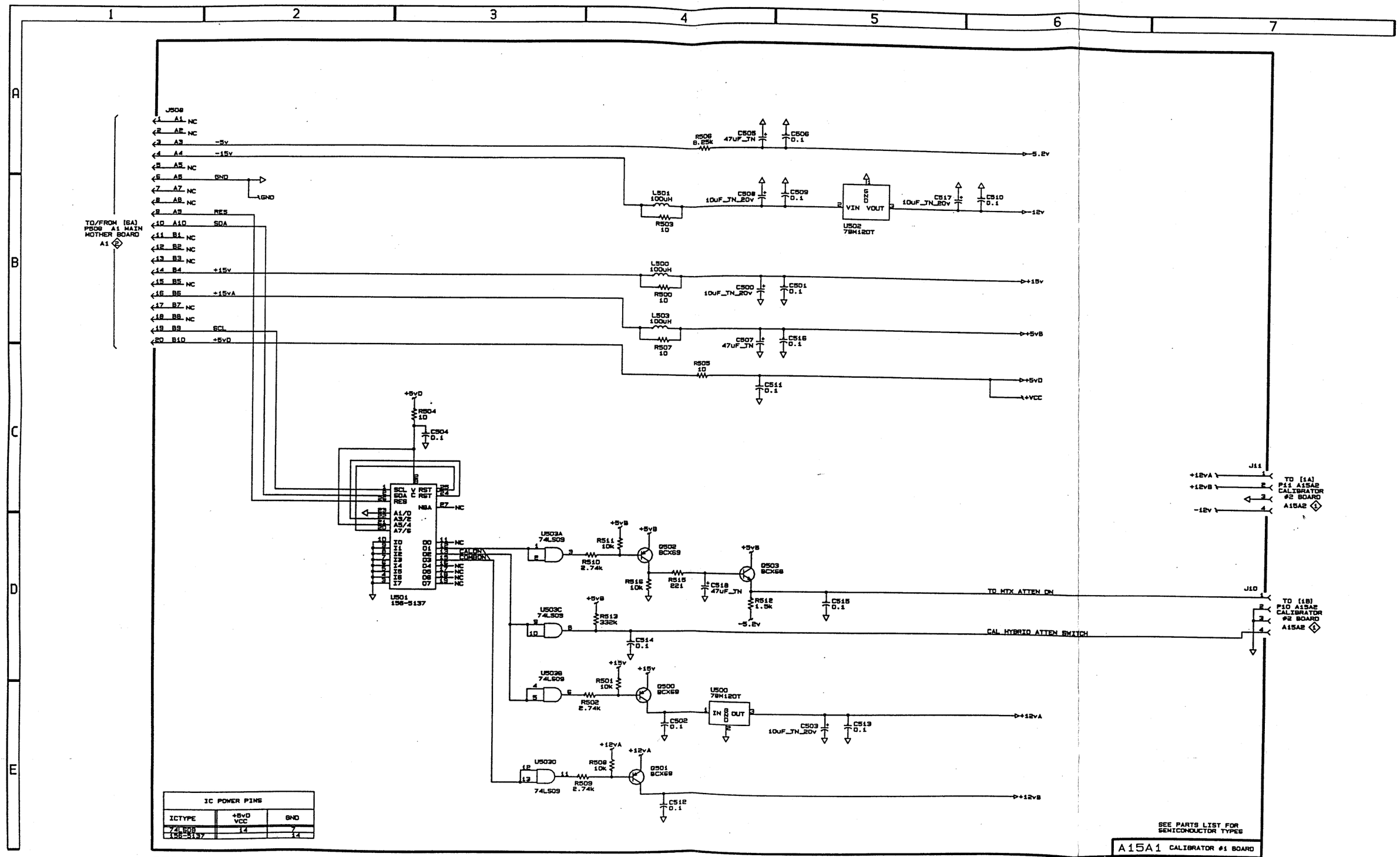

IC POWER PINS		
ICTYPE	+5vD VCC	GND
74LS09	14	7
156-5137		14

H-9827-01 REV. SEP 09, 1991

CALIBRATOR REGULATORS AND SERIAL INTERFACE A15A1 1

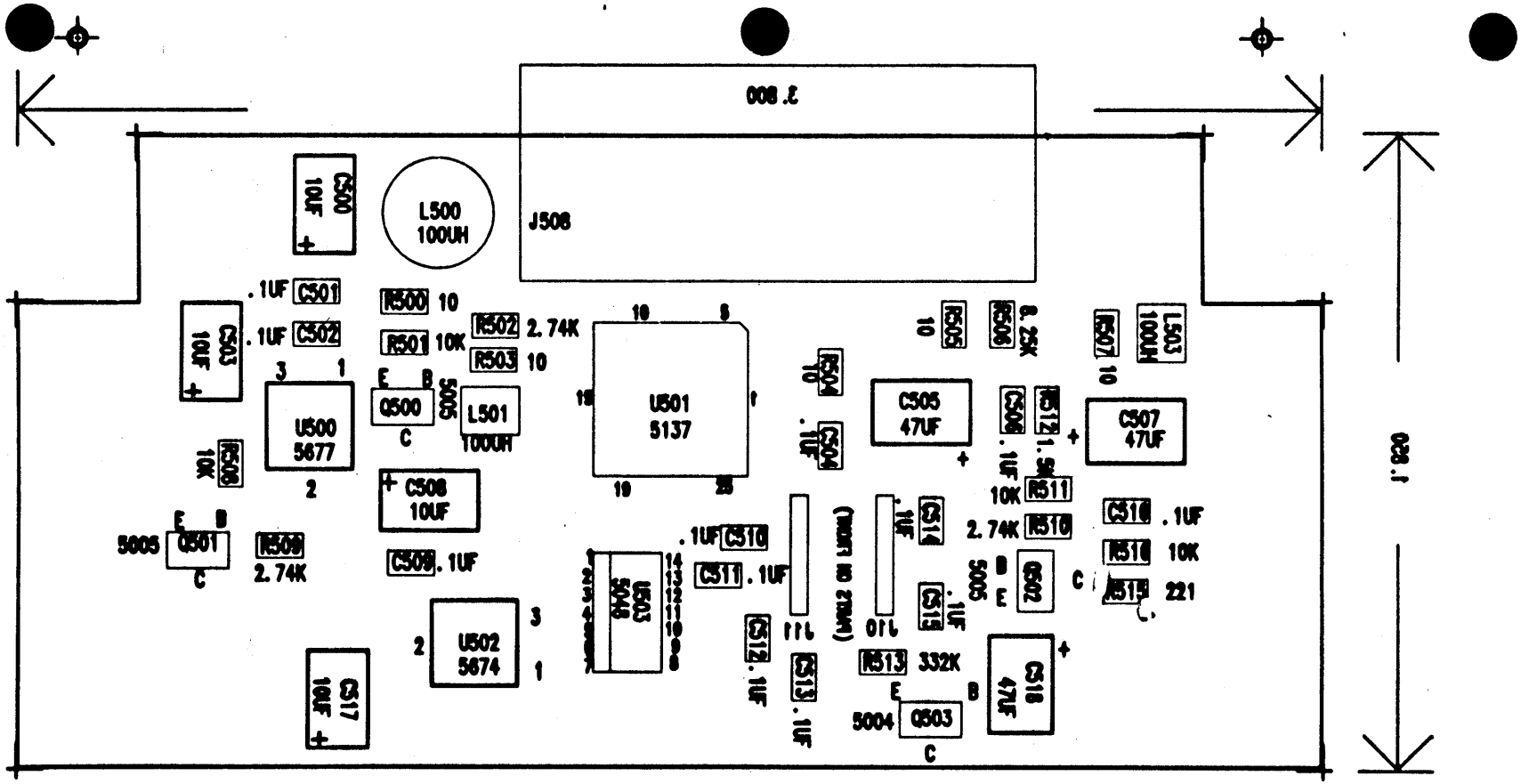

ASSEMBLY DWG. BACK ONLY	
NO. & H-0827-01	
NO. NAME REG\SERIAL INTER	
EE: BOB S X 2383	
ECO: KEN N X 1988	
DATE 2-AUG-88	
DRAWER NO.1-8 PROJECT NO. 2782	
ECO.	REVISION DATE

TITLE REG. AND SERIAL INT.				SCALE: 1:1
BOARD NUMBER H-0827-01				
SHEET TITLE ASSEMBLY BACK				
TEXTRONIX	DATE 2-AUG-88	LAYER NO.	DOCUMENT NUMBER	REV C
	DESIGNED BY KEN N			

BLACK STAR = POS. FILM

H- -01

REGULATOR AND SERIAL INTERFACE

Revised: May 18, 1988
Revision: B

PHOENIX, INC.
FDI PHOENIX ENGINEERING GROUP
ENG: BOB STUART PHONE:627-2363
BD TITLE:CALIBRATOR BOARD #1 670 / 671-0483
ASSEM. NUM.: A15A1 388# HA-9827-00

Bill Of Materials May 20, 1988 9:02:51 Page 1

Item	Quantity	Reference	Part	Tek #	Fp Print
1	2	L501,L503	100uH	108-5015-00	SL120A
2	1	L500	100uH L	108-1252-00	Leaded
3	1	J508	20 CONN	131-3355-00	2x10 .1sp
4	2	J10,J11	4 RCPT	131-2631-00	14 .1 sp
5	1	Q503	BCX68	151-5004-00	SOT-89
6	3	Q502,Q500,Q501	BCX69	151-5005-00	SOT-89
7	1	U503	74LS09	156-5048-00	SO-14
8	1	U501	SID	156-5137-00	PLCC-28
9	1	U502	79M12CDT	156-5674-00	D-PAK
10	1	U500	78M12CDT	156-5677-00	D-PAK
11	12	C501,C502,C504,C506,C509, C510,C511,C512,C513,C514, C515,C516	.1uF	283-5004-00	SR1206B
12	4	C503,C500,C508,C517	10 uFT	290-5002-00	SC002
13	3	C505,C507,C518	47 uFT	290-5003-00	SC703
14	5	R500,R503,R504,R505,R507	10	321-5000-00	SR1206B
15	1	R515	221	321-5010-00	SR1206B
16	1	R512	1.5K	321-5020-00	SR1206B
17	3	R502,R509,R510	2.74K	321-5023-00	SR1206B
18	1	R506	8.25K	321-5029-00	SR1206B
19	4	R501,R508,R511,R516	10K	321-5030-00	SR1206B
20	1	R513	332K	321-5048-00	SR1206B

SET FORM TO TOP OF PAGE AND ENTER <return>

PRINTED 10-Apr-90 11:43 AM

TEKTRONIX, INC. MRI DIVISI01

EFFECTIVITY DATE: ALL

S I N G L E L E V E L B I L L S O F L

ENT PART: 671048400

CIRCUIT BD ASSY

ERC: SRCE CODE: A TYPE: 1 UM:1 ABC:0

ITEM NO	COMPONENT PART NUMBER	ERC PROD.CODE	DESCRIPTION COM.CD	S T S A P C Y P B L UM	EXTENDED QTY PER	S T
0007	120181800		XFMR,TOROID			
		2J	T10	P 1 S C F EA	1	
)002	131026500	A	CONN,RCPT,ELEC			
		2E	L1	P 1 S B F EA	3	
)010	131185700	F	J150,151,152 TERM SET,PIN			
		2E	B6	P 1 S B F EA	1	
			P10,11			
004	152025201	D	2-P10,2-P11 SEMICOND DVC,DI			
		2J	4A	P 1 S C F EA	1	
			GC-2534-15			
005	155028500		CR10			
			MICROCKT,DGTL			
		2H	H1235D	A 1 S A F EA	1	
)06	156268800		U12			
		*	MICROCKT,LINEAR			
		2J	MSA-0335-12	P 1 S C F EA	2	
'23	214191900		U10,11			
		A	HEAT SK,HYB CKT			
		2E	USE/W 155028500	P 1 S C F EA	1	
20	311185900	D	RES,VAR,NONWW			
		2J	87	P 1 S C F EA	1	
			200 OHM			
03	674048400		R505			
			CIRCUIT BD ASSY			
		2J		A 1 B P EA	1	

NOTES:

PRINTED 10-Apr-90 11:43 AM TEKTRONIX, INC. MRI DIVISIO2

EFFECTIVITY DATE: ALL S I N G L E L E V E L B I L L S O F L

PARENT PART: 671048300 CIRCUIT BD ASSY UM:1

ERC: SRCE CODE: A TYPE: 0 ABC:0

ITEM NO	COMPONENT PART NUMBER	ERC PROD.CODE	DESCRIPTION COM.CD	S C	T Y	S P	A B	P L	UM	EXTENDED QTY	S PER T
0001	108126200		INDUCTOR								
		2F	Q4	P	1	S	B	F	EA	1	
			100UH								
			L500								
0003	131263100	A	CONN,RCPT,ELEC								
		2J	B6	P	1	S	C	F	EA	2	
			J10,11								
0002	131335900		CONN,RCPT,ELEC								
		2J	B6	P	1	S	C	F	EA	1	
			2X10								
			P508								
0004	674048300		CIRCUIT BD ASSY								
		2J		A	0		B	P	EA	1	

NOTES:

END OF REPORT

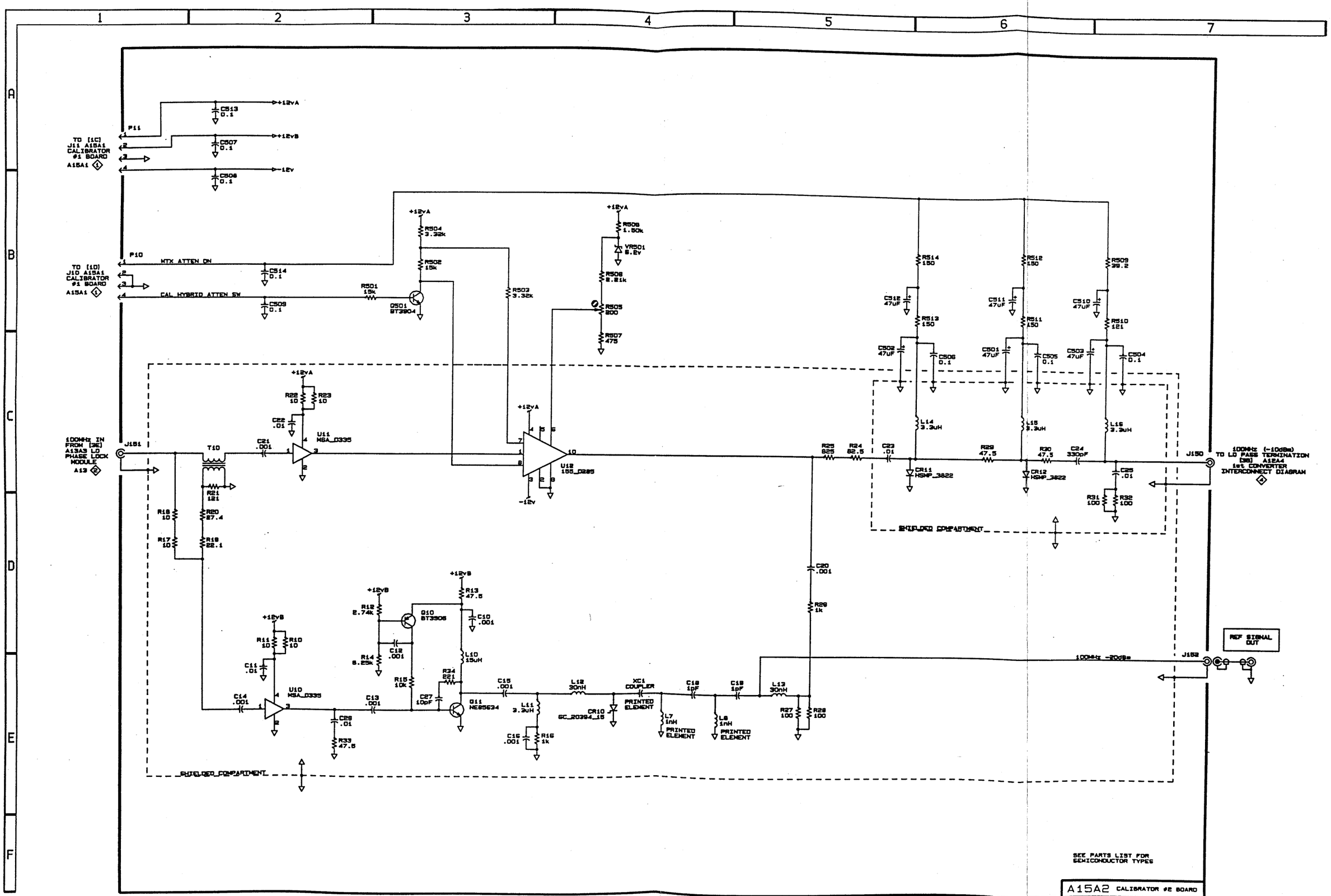

H-9826-01

100MHz AND 6.4GHz CALIBRATOR A15A2 1

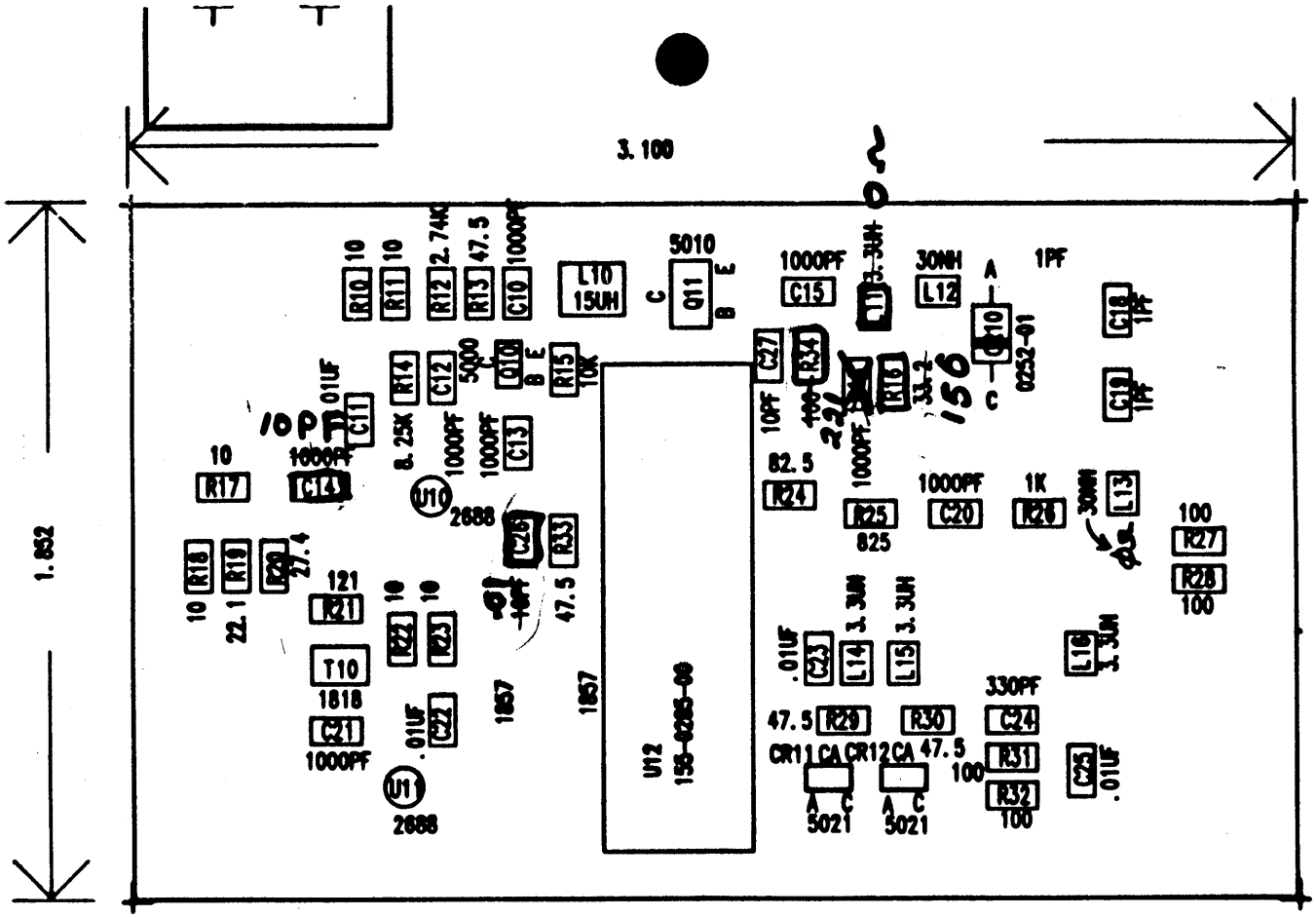

TITLE 100 MHZ AND 6.4 GHZ		SCALE: 1:1
BOARD NUMBER H-0628-01		
SHEET TITLE ASSEMBLY FRONT		
TEXTRON X	DATE 7-26-88 / DESIGNED BY KEN N	LAYER NO. / DOCUMENT NUMBER / REV C

BLACK STAR = POS. FILM

ASSEMBLY DWG. FRONT
BD. # H-0628-01
BD. NAME 100 MHZ AND 6.4 GHZ
EE:BOB STUART x 2363
ECR: KEN N x 1986
DATE 26-JUL-88
DRAWER NO. 1/8 PROJECT NO. 2782

ECR	REVISION DATE

H- -01

					TITLE 100 MHZ AND 6.4 GHZ
					BOARD NUMBER H-9828-01
					SHEET TITLE ASSEMBLY BACK
					SCALE: 2:1
REV C	DOCUMENT NUMBER	LAYER NO.	DATE 7-28-88	TEXTRON X	
			DESI CHKD BY KEN N		

BLACK STAR = POS. FILM

ASSEMBLY DWG. BACK
NO. & H-9828-01
NO. NAME 100 MHZ AND 6.4 GHZ
EE:BOB STUART X 2363
ED: KEN N X 1988
DATE 28-JUL-88
DRAWER NO. 1/8 PROJECT NO. 2782

ECN.	REV SI ON DATE

0 MHZ AND 6.4 GHZ

Revised: May 17, 1988
Revision: 1

TEKTRONIX, INC.
FDI PHOENIX ENGINEERING GROUP
E.E. BOB STUART PHONE: 627-2363
BD TITLE:CALIBRATOR BOARD #2 670 / 671-0484
ASSEM. NUM.: A15A2 388# HP-5826-00

Bill Of Materials May 20, 1988 9:03:16 Page 1

Item	Quantity	Reference	Part	Tek #	Ft Print
1	2	L8,L7	1nH	Printed ele	50-mil
2	2	L12,L13	30mH	108-2028-00	SS153
3	4	L11,L14,L15,L16	3.3uH	108-5010-00	SS163
4	1	L10	15uH	108-5002-00	SL120A
5	1	T10	120-1818-00	120-1818-00	
6	2	P11,P10	4 MALE	131-1857-00	1x4 A/R
7	3	J151,J150,J152	51-053-0000	131-0265-00	PC MOUNT
8	1	Q501	BT3904	151-5001-00	SOT-23
9	1	Q10	BT3906	151-5000-00	SOT-23
10	1	Q11	NE85634	151-5011-00	SOT-85
11	1	CR10	GC-2534-15	152-0252-01	DO-35
12	1	CR501	BZ5234	152-5011-00	SOT-23
13	2	CR11,CR12	HSMP 3822	152-5021-00	SOT-23
14	1	U12	H1235D	155-0285-00	0.1x10
15	2	U10,U11	MSA-0335-12	156-2668-00	
16	2	C18,C19	1pF	283-5017-00	SR1206B
17	2	C27,C26	10pF	283-5000-00	SR1206B
18	1	C24	330pF	283-5014-00	SR1206B
19	8	C10,C12,C13,C14,C15,C16, C20,C21	1000pF	283-5002-00	SR1206B
20	4	C11,C22,C23,C25	.01uF	283-5003-00	SR1206B
21	8	C507,C504,C505,C506,C508, C509,C513,C514	.1uF	283-5004-00	SR1206B
22	6	C502,C501,C503,C510,C511, C512	47 uFT	290-5003-00	SOT03

J MHZ AND 6.4 GHZ

Revised: May 17, 1988
Revision: 1

PHOENIX, INC.
FDI PHOENIX ENGINEERING GROUP
I.E. BOB STUART PHONE: 627-2363
BD TITLE:CALIBRATOR BOARD #2 670 / 671-0484
ASSEM. NUM.: A15A2 386# HA-9828-00

Bill Of Materials May 20, 1988 9:03:16 Page 2

Item	Quantity	Reference	Part	Tex #	Ft Print
23	1	R505	200 POT	311-1859-00	3x.1 sp
24	6	R10, R11, R17, R18, R22, R23	10	321-5000-00	SR1206B
25	1	R509	15	321-5002-00	SR1206B
26	1	R510	18.2	321-5003-00	SR1206B
27	1	R19	22.1	321-5004-00	SR1206B
28	1	R20	27.4	321-5005-00	SR1206B
29	1	R16	33.2	321-5050-00	SR1206B
[illegible]	4	R29, R13, R30, R33	47.5	321-5043-00	SR1206B
31	1	R24	82.5	321-5046-00	SR1206B
32	5	R27, R28, R31, R32, R34	100	321-5006-00	SR1206B
33	1	R21	121	321-5007-00	SR1206B
34	4	R514, R511, R512, R513	150	321-5008-00	SR1206B
35	1	R507	681	321-5016-00	SR1206B
36	1	R25	825	321-5017-00	SR1206B
37	1	R26	1K	321-5018-00	SR1206B
38	1	R508	1.5K	321-5020-00	SR1206B
39	1	R12	2.74K	321-5023-00	SR1206B
40	3	R503, R504, R506	3.32K	321-5024-00	SR1206B
41	1	R14	8.25K	321-5029-00	SR1206B
42	1	R15	10K	321-5030-00	SR1206B
[illegible]3	2	R501, R502	15K	321-5032-00	SR1206B
44	1	Shield 1	Chem-mill 1	337-3530-00	SCREW
45	1	Shield 2	Chem-mill 2	337-3537-00	SOLDER

Index

Board Name	Engineering #	Revision
Preselector Driver	H-9665-01	D
VR #1	H-9004-01	G
	H-9004-02	K
VR #2	H-9005-01	F
	H-9005-02	H
	H-9005-05	L
VR #3	H-9006-01	F
	H-9006-02	H
	H-9006-04	L
Analog Video Proc.	H9A-0034-00	C
Digital Video Proc.	HC-9015-00	D
X5 Multiplier	H-9362-01	F
	H-9362-02	H
Period Counter	H-9029-01	E
565 Phase Lock	H-9023-01	E
Frac. N Synth.	H-9024-01	H
565 Interconnect	H-9025-01	F
	H-9025-02	G
Sweep / Span	H-9028-01	E
I/O Interface	H ?	?

X

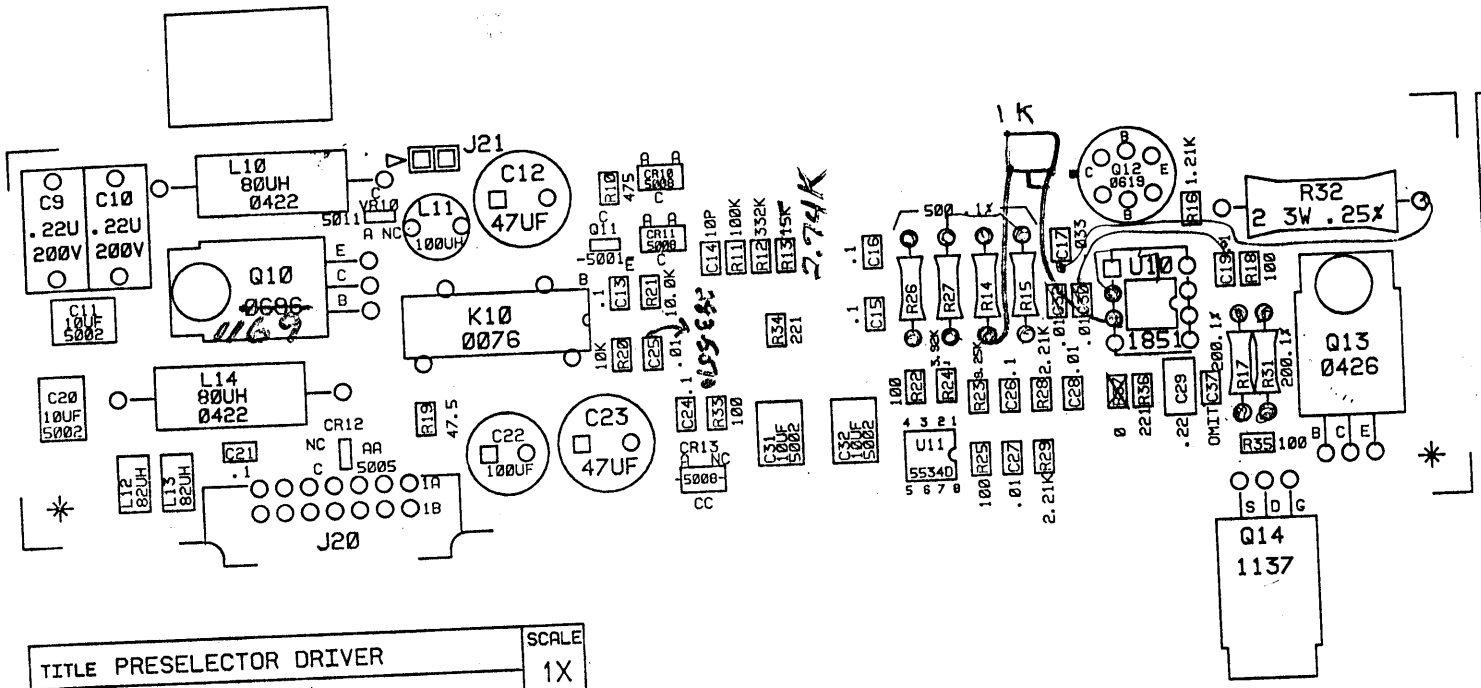

ASSEMBLY DRAWING FRONT ONLY
BD# H-9665-01
BD NAME PRESELECTOR DRIVER
EE GORDON L. X 1461
ECB KEN N. X 1986
DATE 10/06/88
DRAWER # 1-8
PROJECT 2782

E	C	B

TITLE PRESELECTOR DRIVER				SCALE 1X
BD. NUMBER H-9665-01				
SHEET TITLE FRONT ASSEMBLY				
TEKTRONIX	DATE: 10/06/88	LAYER NO.	DOCUMENT NO. TK44C-2	REV D
	DESIGNED BY KN			

BLACK STAR - POS FILM

DIGITIZED BY SYNERTECH, INC D1

L8

VR#1

BER: H-9004-01			2 : 1
TLE: ASSEMBLY-FRONT			
DATE: 10/17/88	LAYER: AF	DOCUMENT NO.	REV
DESIGNED BY: B. ROWNTREE		TK135D-1	G
R-AIDED DESIGN BY SYNERTECH, INC.			
X STAR-POS FILM			

NOTE: UNLESS OTHERWISE INDICATED
1. ALL RESISTANCES ARE IN OHMS.
2. ALL CAPACITANCES ARE IN PICOFARADS.

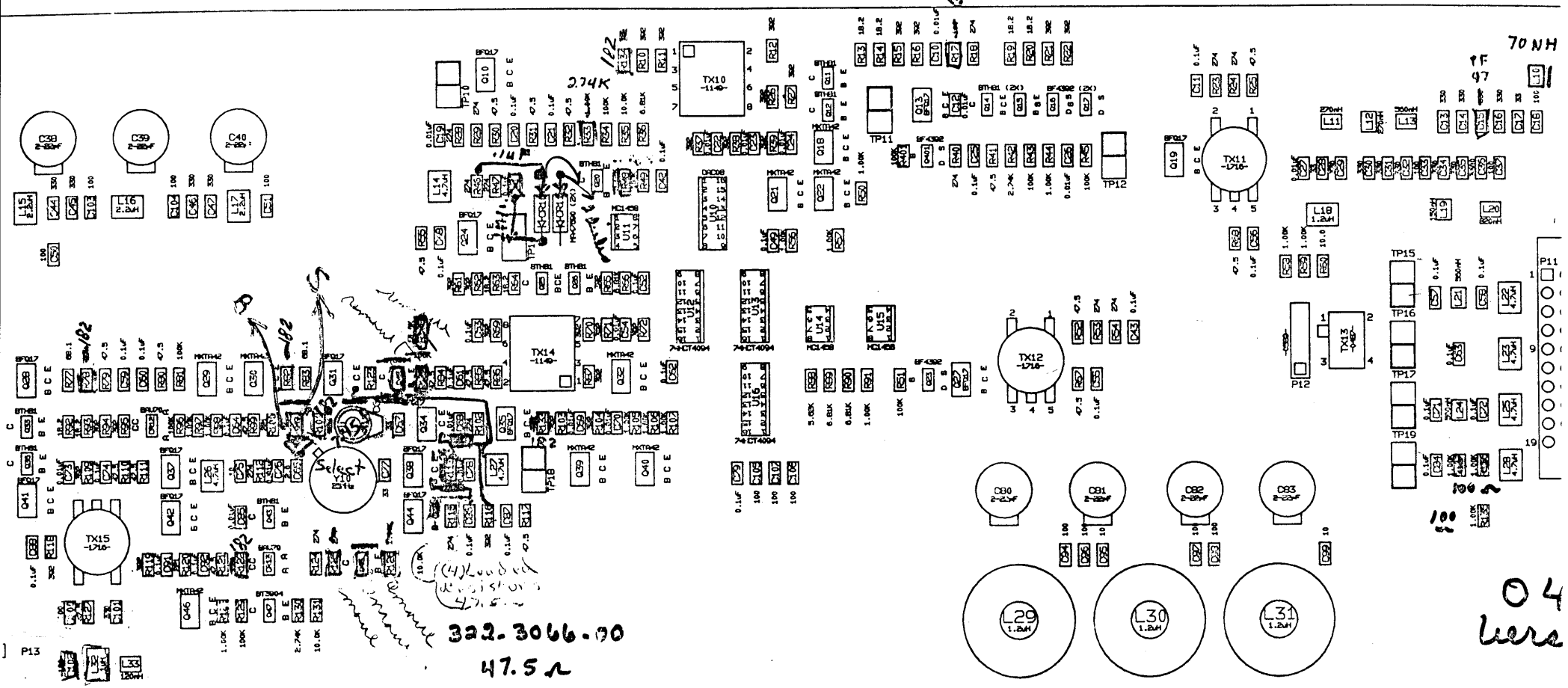

R#1	SCALE: 2:1
ER: H-9004-02	
E: ASSEMBLY-FRONT	
DATE: 7/23/91 LAYER: AF	DOCUMENT NO. GG060 REV K
DESIGNED BY: B. ROWTREE	
IDED DESIGN BY PACIFIC DESIGN ENGINEERING	
STAR-POS FILM	

NOTE: UNLESS OTHERWISE INDICATED
1. ALL RESISTANCES ARE IN OHMS.
2. ALL CAPACITANCES ARE IN PICOFARADS.

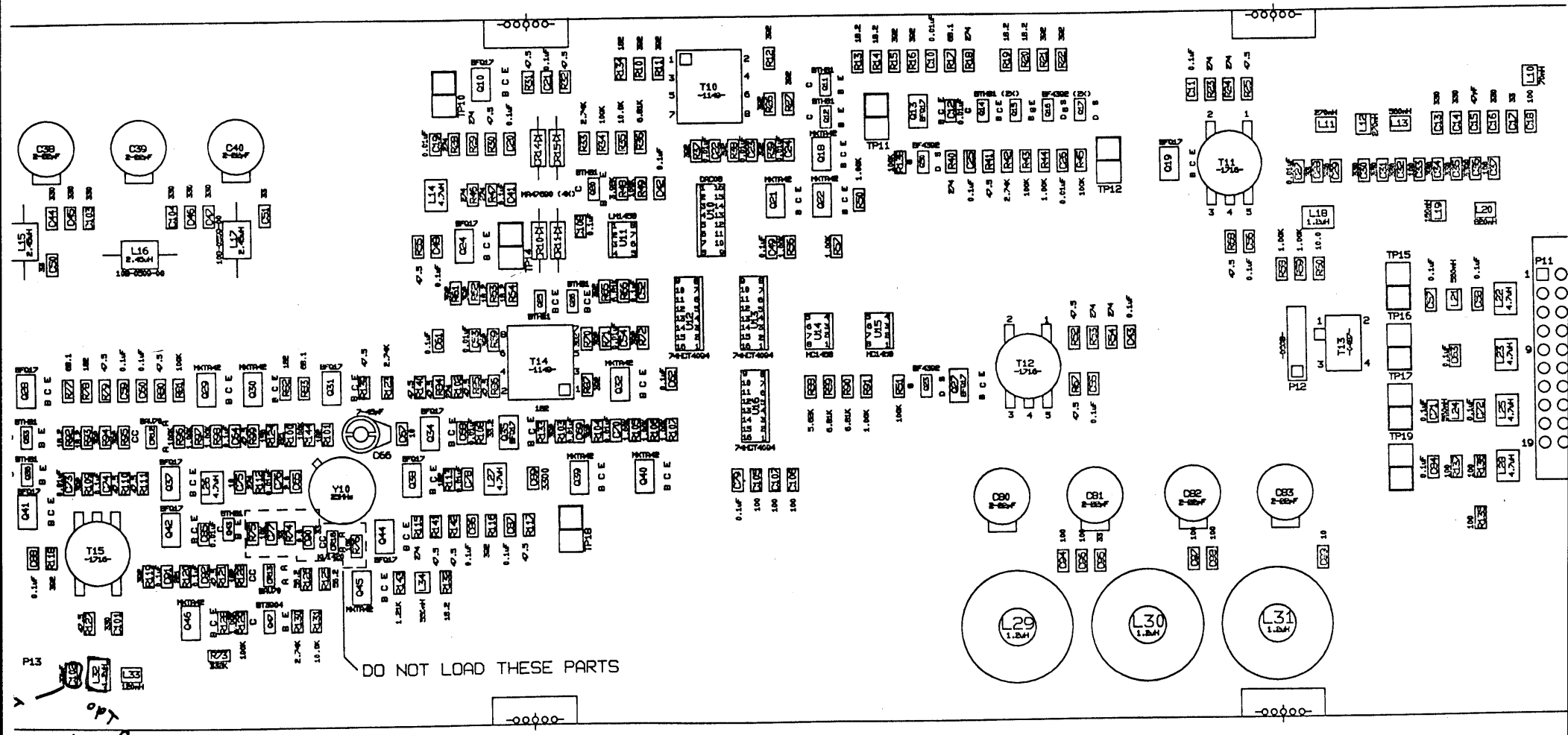

S: UNLESS OTHERWISE INDICATED
1. ALL RESISTANCES ARE IN OHMS.
2. ALL CAPACITANCES ARE IN PICOFARADS.
3. ALL UNMARKED CAPS ARE 283-5004-00.

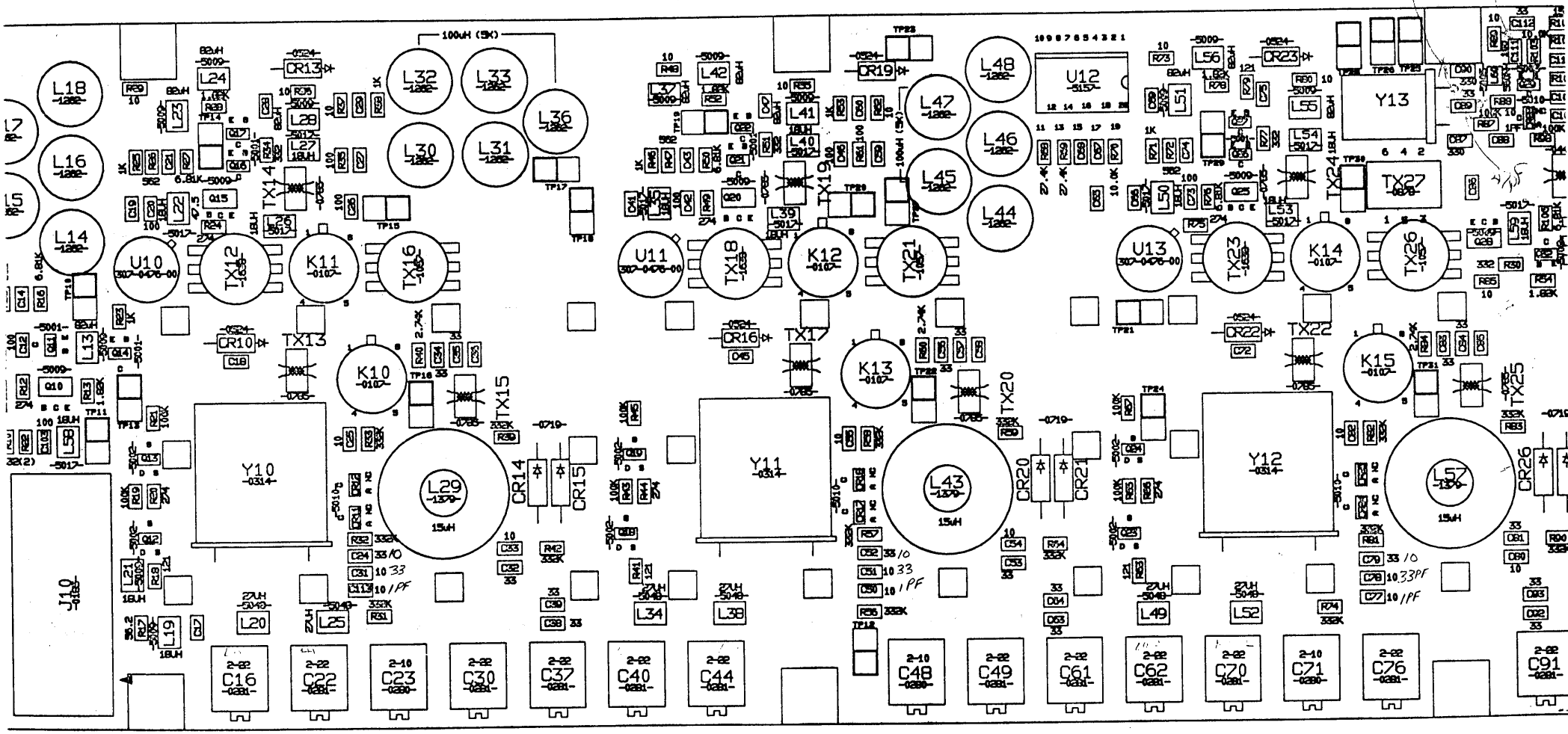

VR#2			SCALE: 1 : 1
NUMBER: H-9005-01			
TITLE: ASSEMBLY-FRONT		SHEET 8 OF 11	
DATE: 12/20/88	LAYER: AF	DOCUMENT NO. TK66D-2	REV F
DESIGNED BY: D. SEAMAN			

RE-AIDED DESIGN BY SYNERTECH INC

ML1

OTES: UNLESS OTHERWISE INDICATED
1. ALL RESISTANCES ARE IN OHMS.
2. ALL CAPACITANCES ARE IN PICOFARADS.
3. ALL UNMARKED CAPS ARE 283-5004-00.

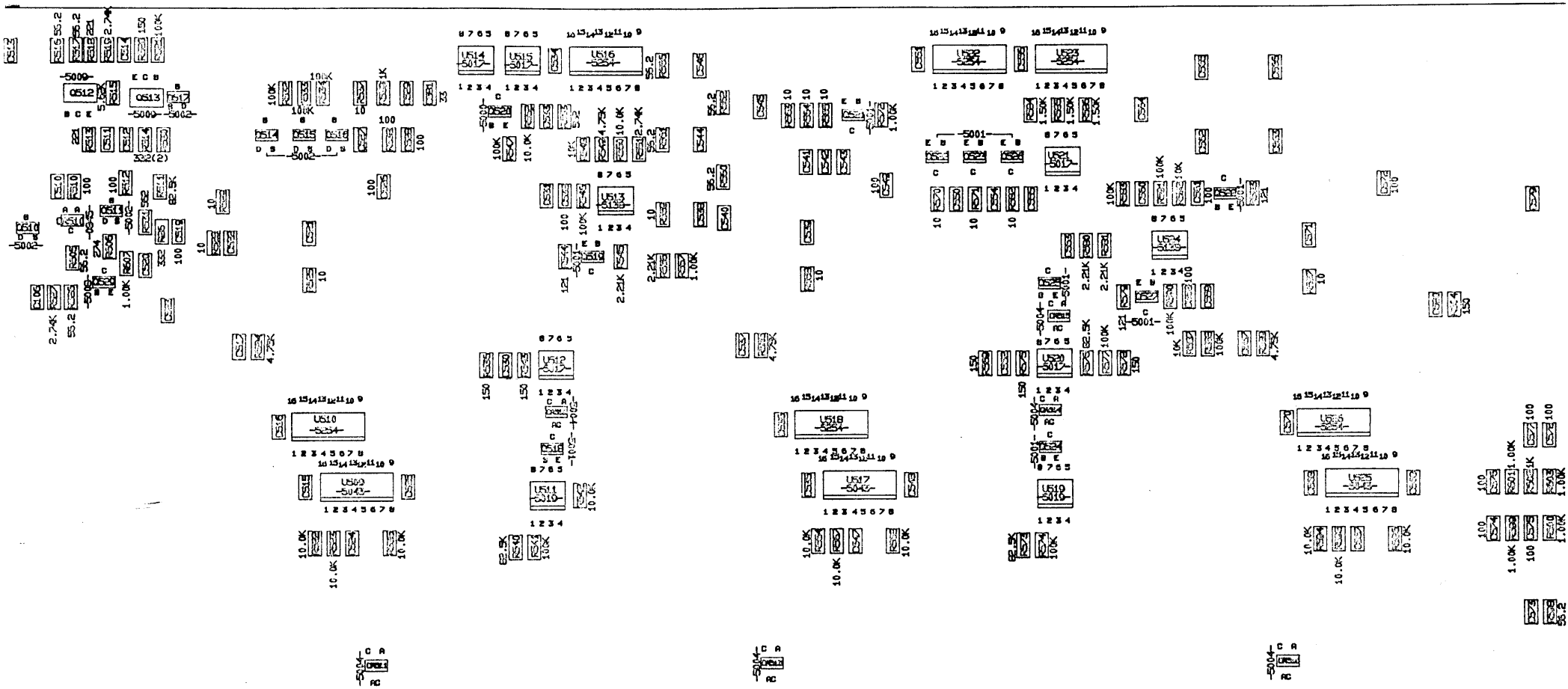

TITLE: VR#2			SCALE: 1 : 1
CARD NUMBER: H-9005-01			
SHEET TITLE: ASSEMBLY BACK/B		SHEET 10 OF 11	
TEKTRONIX	DATE: 12/20/88	LAYER: A6/B	DOCUMENT NO. TK66D-2	REV F
	DESIGNED BY: D. SEAMAN		
COMPUTER-AIDED DESIGN BY SYNERTECH, INC.			
BLACK STAR-POS FILM			

ALL RESISTANCES ARE IN
ALL CAPACITANCES ARE IN PICOFARADS.
ALL UNMARKED CAPS ARE 283-5004-00.

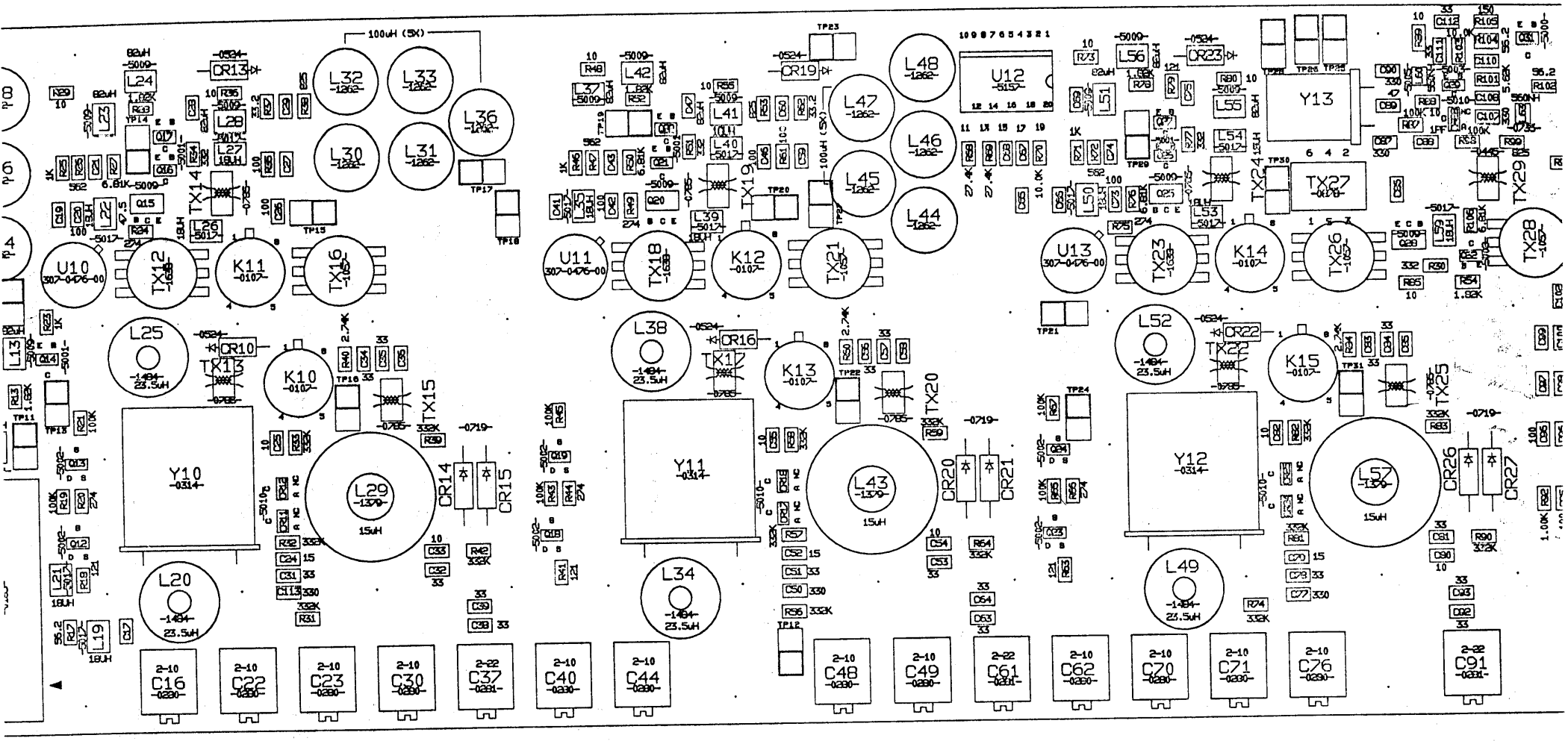

	SCALE: 1 : 1
-9005-02	
BLY-FRONT	SHEET 8 OF 11
23/99 LAYER: AF	DOCUMENT NO. TK66D-3 REV H
D BY: D. SEAMAN	
SIGN BY SYNERTECH, INC.	
FILM	

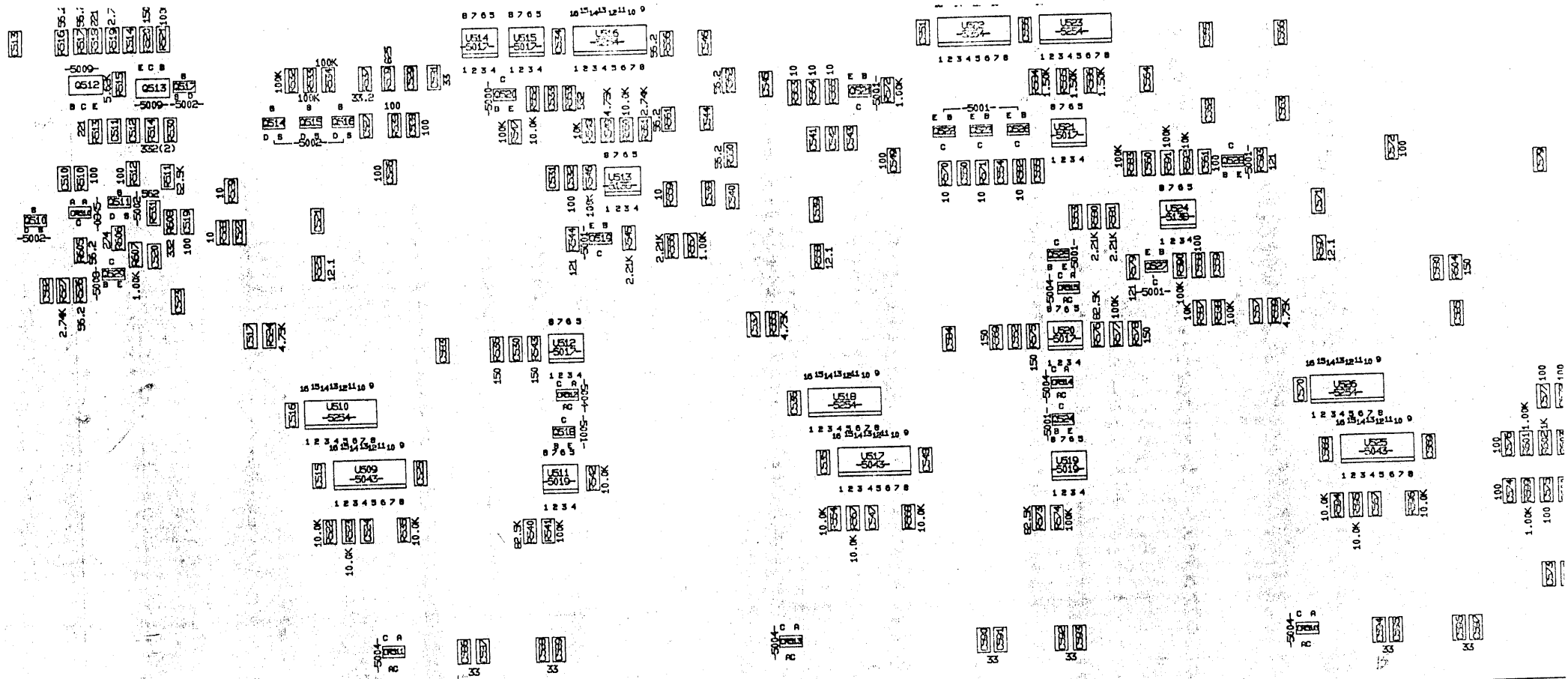

TITLE: VR#2			SCALE: 1 : 1
BOARD NUMBER: H-9005-02			
SHEET TITLE: ASSEMBLY BACK/B			
TEKTRONIX	DATE: 3/23/89	LAYER: AB/B	DOCUMENT NO. TK66D-3	REV H
	DESIGNED BY: D. SEAMAN		
COMPUTER-AIDED DESIGN BY: SYNERTECH, INC.			
★ BLACK STAR-POS FILM			

NMARKED CAPS ARE 783-5004-00.

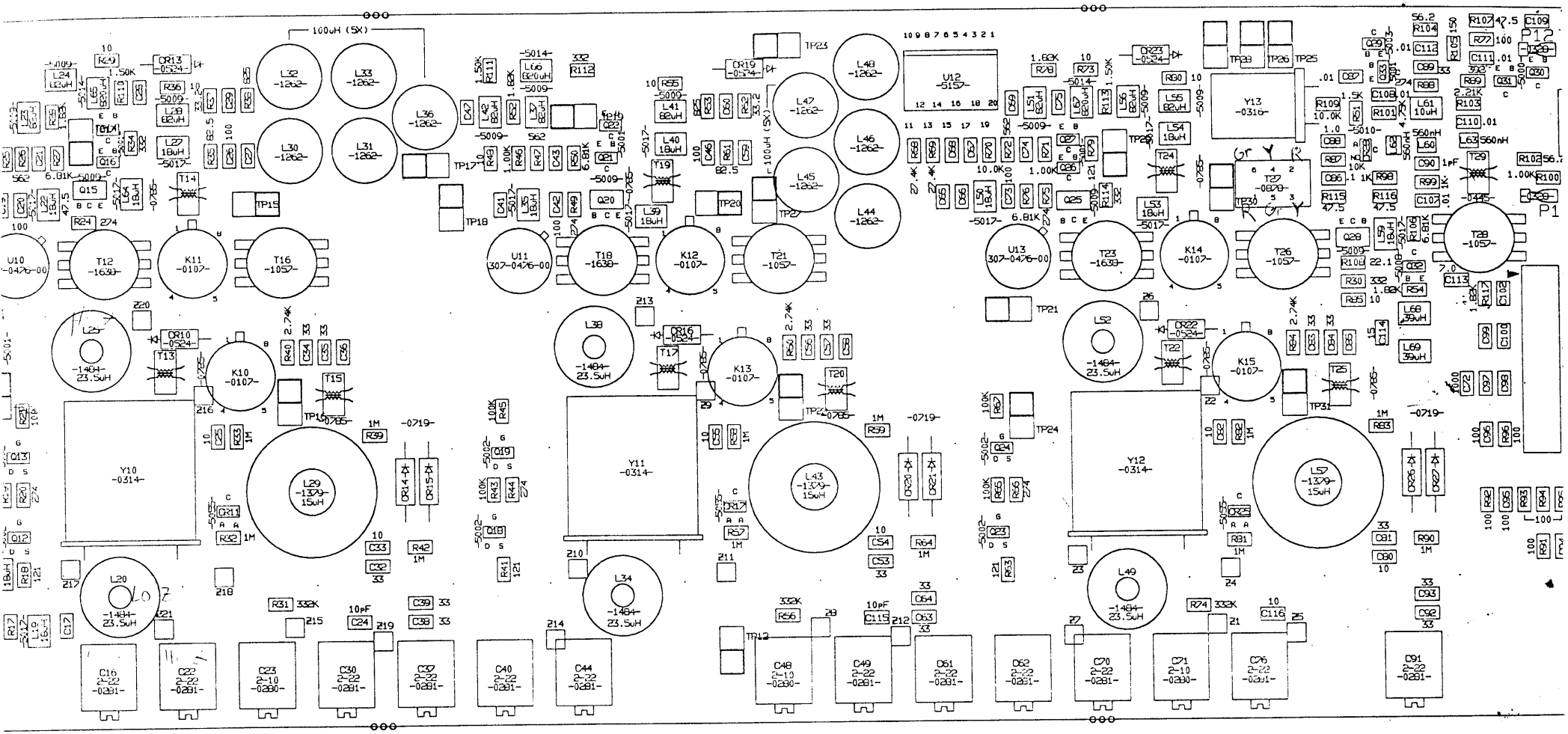

5	SCALE: 2:1
-FRONT	
ER: AF	DOCUMENT NO. / REV
DANTREE	GG040 L
CIFIC DESIGN ENGINEERING	

ASSEMBLY DWG-FRT
BD. #H-9005-05
BD. NAME: VR#2

EE: J.TRUMPS X1871
ECB: R.DELKER X2319
DATE: 7/22/91 PROJECT #
DRAWER #1-14 2782

MOD #	REVISION DATE
PENDING	4/12/91
M24939	6/25/91

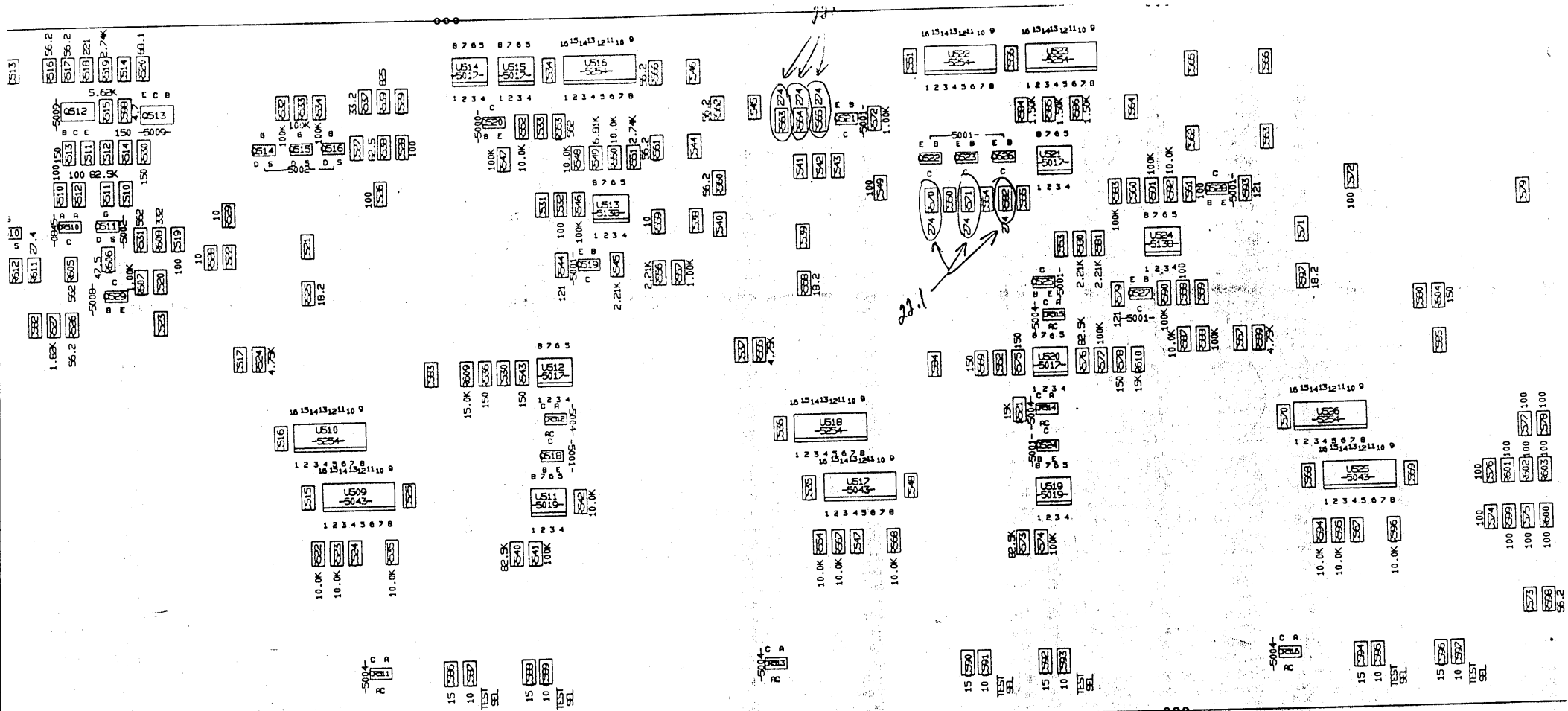

TITLE: VR#2	SCALE:
BOARD NUMBER: H-9005-05	
SHEET TITLE: ASSEMBLY BACK/BACK VIEW	
TEKTRONIX	DATE: 7/22/91 LAYER: AB/F DESIGNED BY: B. ROWNTREE DOCUMENT NO. GG040 REV L
COMPUTER-AIDED DESIGN BY PACIFIC DESIGN ENGINEERING	
★ BLACK STAR=POS FILM	

ASSEMBLY DWG-BCK
BD. #H-9005-05
BD. NAME: VR#2

EE: J.TRUMPS X1871
ECB: R.DELKER X2319
DATE: 7/22/91 PROJECT #
DRAWER #1-14 2782

MOD #	REVISION DATE
PENDING	4/12/91
M74939	6/25/91

1. ALL RESISTANCES ARE IN OHMS.
2. ALL CAPACITANCES ARE IN PICOFARADS.
3. ALL UNMARKED CAPS ARE 283-5004-00.

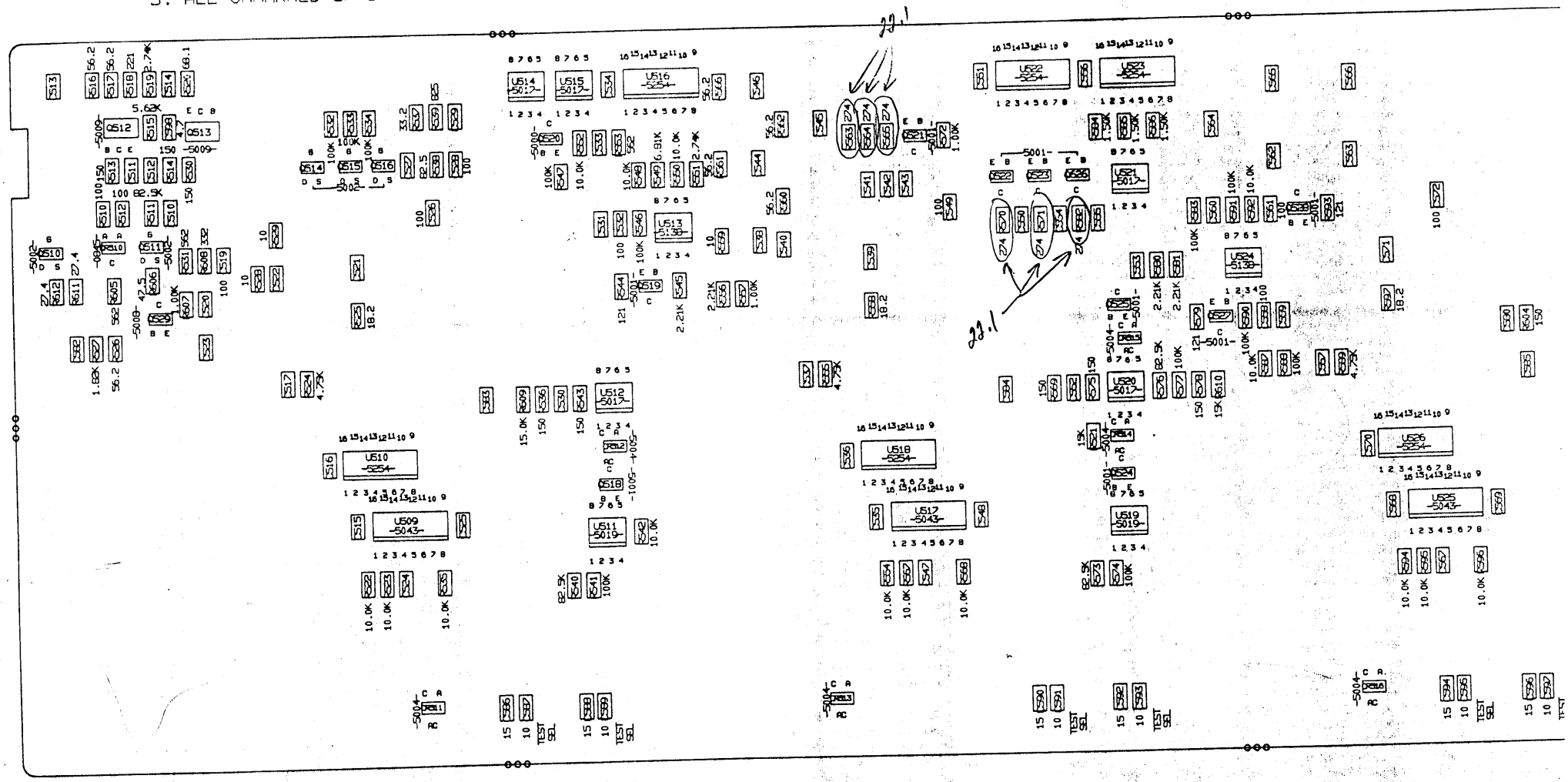

TITLE: VR#2			SCALE:
BOARD NUMBER: H-9005-05			
SHEET TITLE: ASSEMBLY BACK/BACK VIEW			
TEKTRONIX	DATE: 7/22/91	LAYER: AB/F	DOCUMENT NO. GG040 REV L
	DESIGNED BY: B. ROWTREE		
COMPUTER-AIDED DESIGN BY *PACIFIC DESIGN ENGINEERING*			
★ BLACK STAR-POS FILM			

ASSEMBLY DWG-BCK
BD. #H-9005-05
BD. NAME: VR#2

EE: J. TRUMPS X1871
ECB: R. DELKER X2319
DATE: 7/22/91 PROJECT # 2782
DRAWER # 1-14

MOD #	REVISION DATE
PENDING	4/12/91
M24939	6/25/91

-5: UNLESS OTHERWISE INDICATED

1. ALL RESISTANCES ARE IN OHMS.
2. ALL CAPACITANCES ARE IN PICOFARADS.
3. ALL UNMARKED CAPS ARE 203-5004-00.

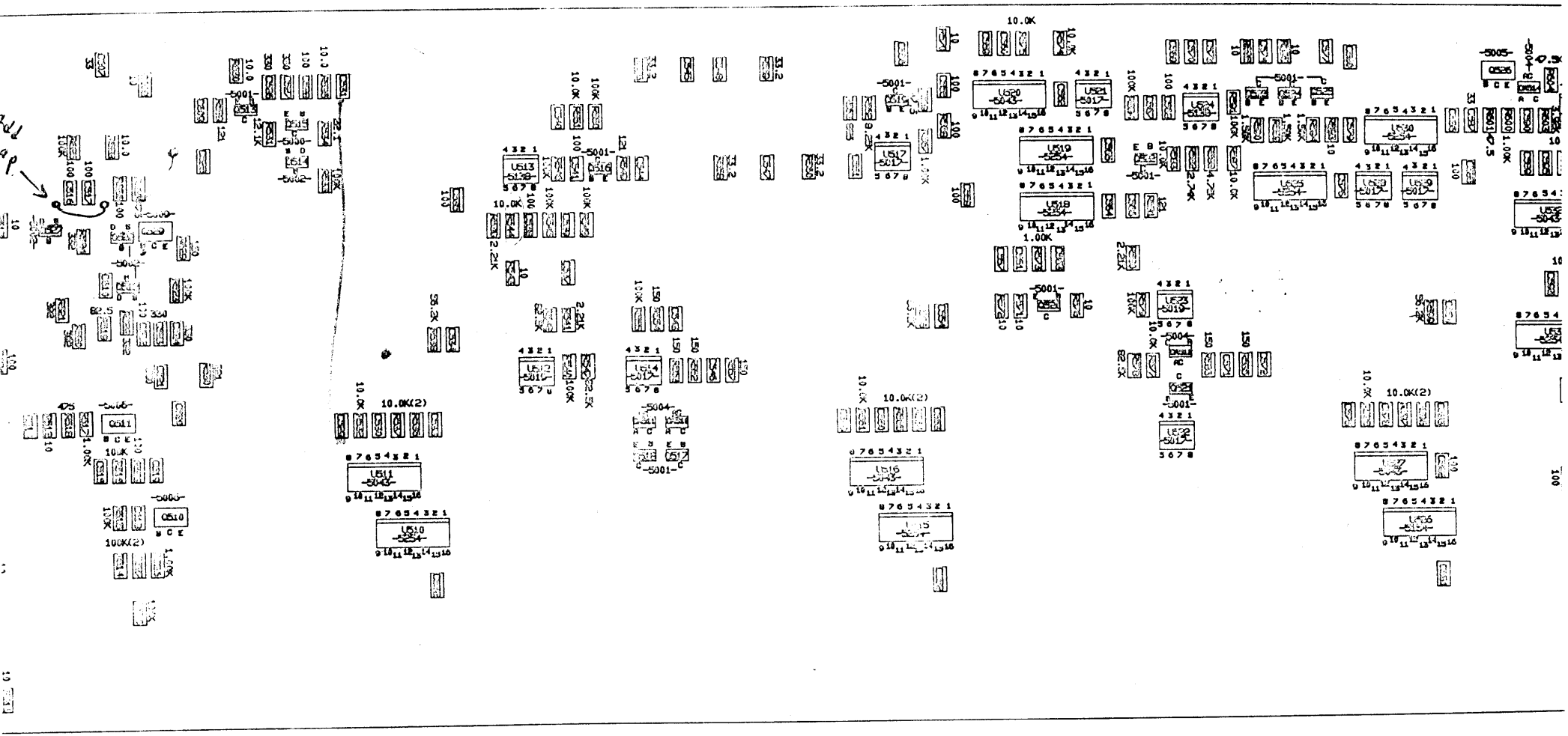

VR#3		SCALE: 1:1	
NUMBER: H-9006-01			
TITLE: ASSEMBLY-BACK(FROM BACK)			
DATE: 10/31/83	LAYER:	DOCUMENT NO.	REV
DESIGNED BY: D.SUHAN		TK60D-2	F
ER-AIDED DESIGN BY SYNERTECH, INC.			
OK STAR-POS FILM			

RWISE INDICATED
STANCES ARE IN OHMS.
CITANCES ARE IN PICOFARADS.
RKED CAPS ARE 283-5004-00.

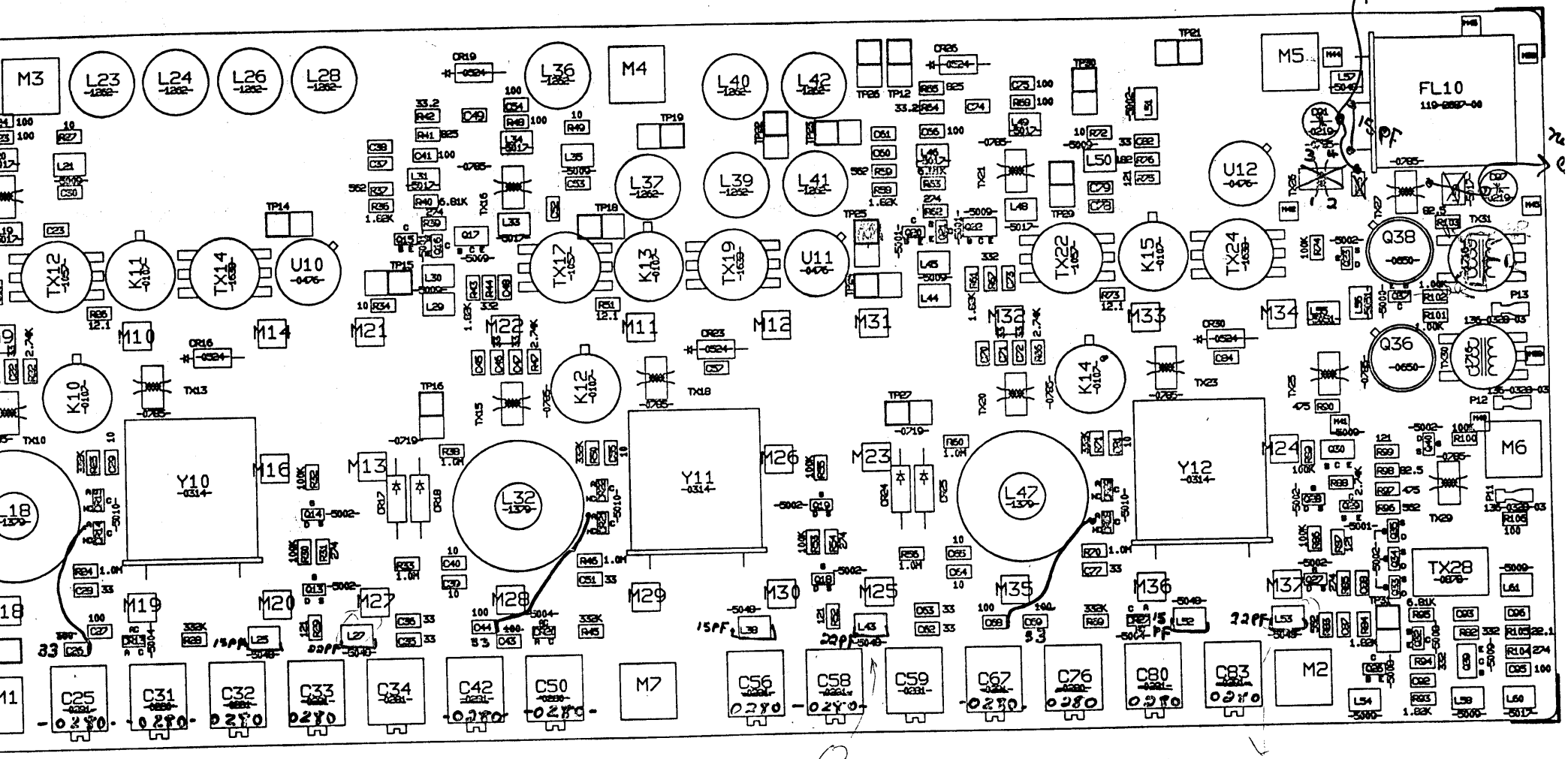

	SCALE: 1:1
DOCUMENT NO. TK60D-2	REV F

TECH. INC.

E INDICATED
ION ARE IN OHMS.
NCES ARE IN PICOFARADS.
CAPS ARE 283-5004-00.

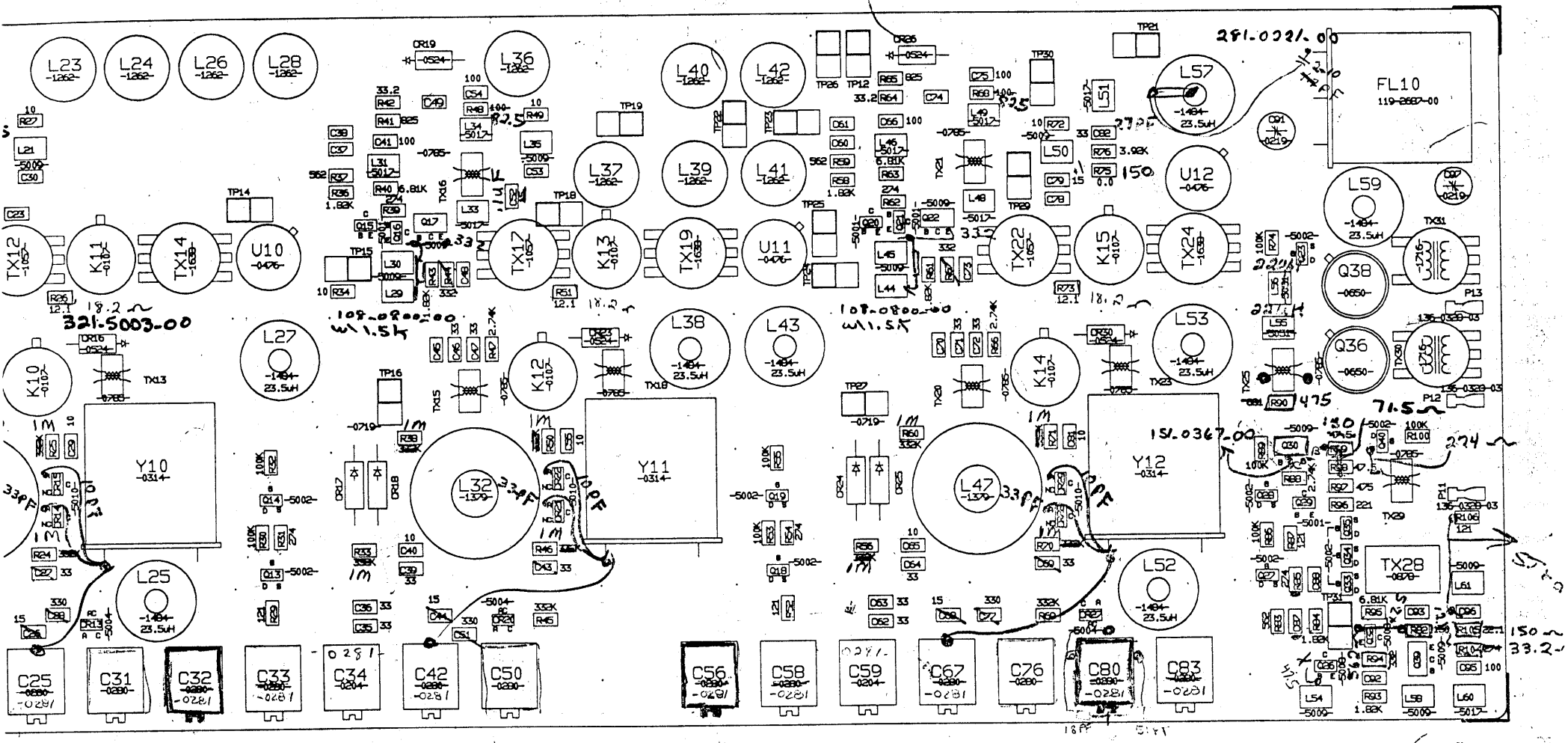

10 Version

SCALE: 1:1	
T NO.	REV
D-3	H
INC.	

UNMARKED CAPS ARE 283-5004-00.

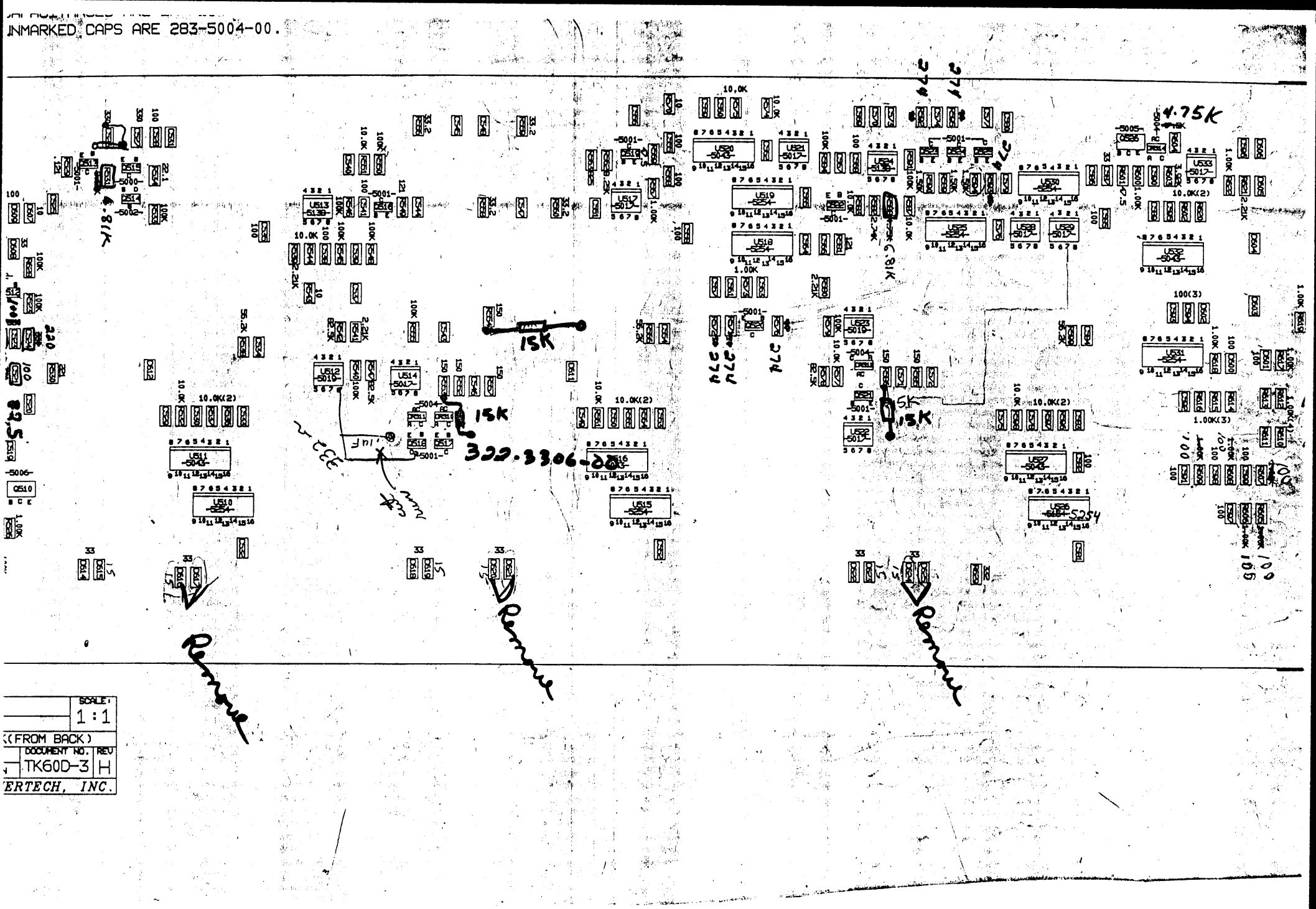

	SCALE: 1:1
(FROM BACK)	
DOCUMENT NO.	REV
TK60D-3	H

ERTECH, INC.

OTHERWISE INDICATED
RESISTANCES ARE IN OHMS.
CAPACITANCES ARE IN PICOFARADS.
UNMARKED CAPS ARE 283-5004-00.

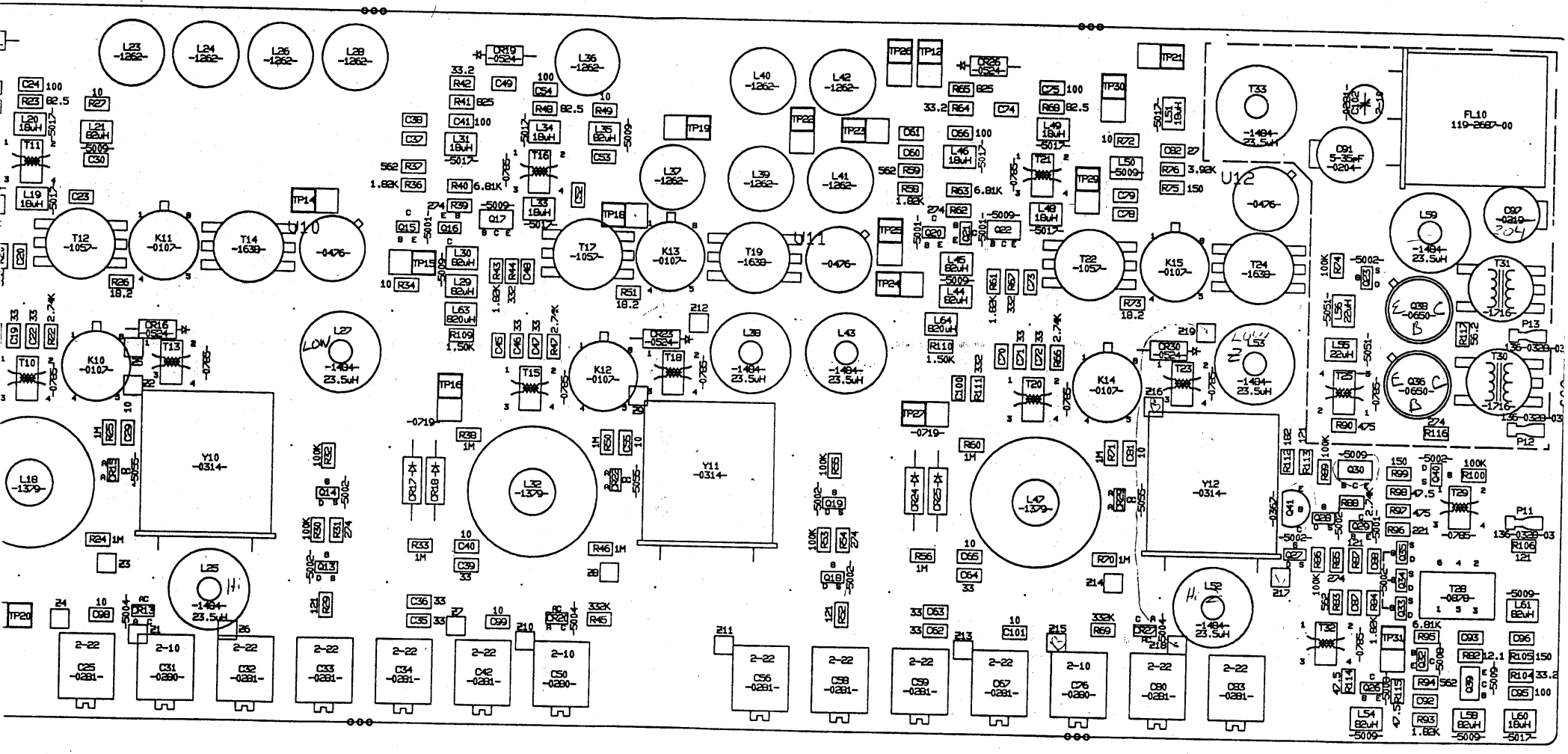

SCALE: 2:1	ASSEMBLY DWG-FRT
DOCUMENT NO. GG050 REV L	BD. # H-9006-04
	BD. NAME: VR#3
	EE: J. TRUMPSX1871

NOTES: UNLESS OTHERWISE INDICATED

1. ALL RESISTANCES ARE IN OHMS.
2. ALL CAPACITANCES ARE IN PICOFARADS.
3. ALL UNMARKED CAPS ARE 283-5004-00.

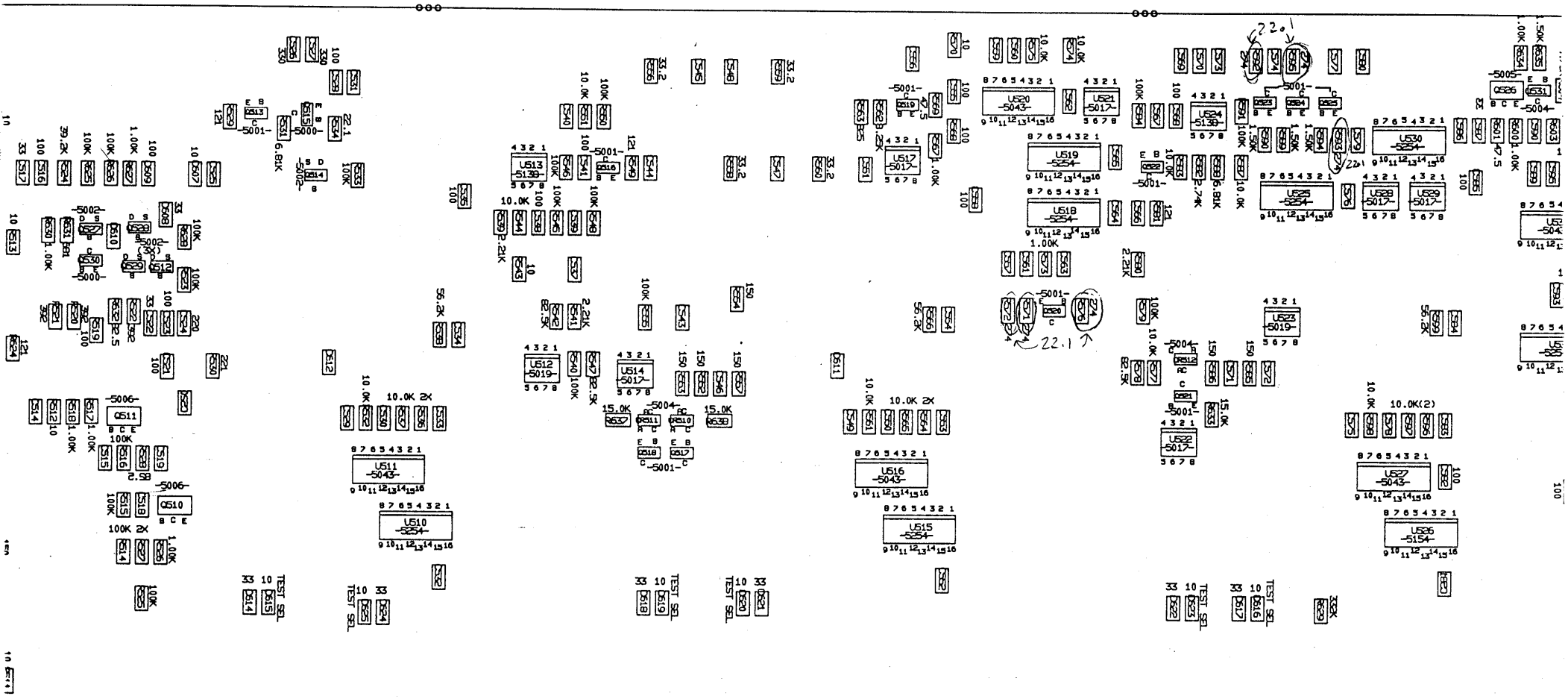

VR#3	SCALE: 2:1
NUMBER: H-9006-04	
TITLE: ASSEMBLY-BACK BACK VIEW	
DATE: 7/29/91	LAYER: AB/F
DESIGNED BY: B. ROWNTREE	DOCUMENT NO. GG050 REV L
-AIDED DESIGN BY PACIFIC DESIGN ENGINEERING	
K STAR=POS FILM	

ASSEMBLY DWG-BCK
BD. # H-9006-04
BD. NAME: VR#3

EE: J. TRUMPSX1871
ECB: DELKER X2319
DATE: 7/29/91 PROJECT # 2782
DRAWER #1-7

MOD #	REVISION DATE
21A - 44A	3/24/89
97A - 122A	3/24/89
PENDING	4/25/91

NOTE: UNLESS OTHERWISE INDICATED
1. ALL RESISTANCES ARE IN OHMS
2. ALL CAPACITANCES ARE IN PICOFARADS

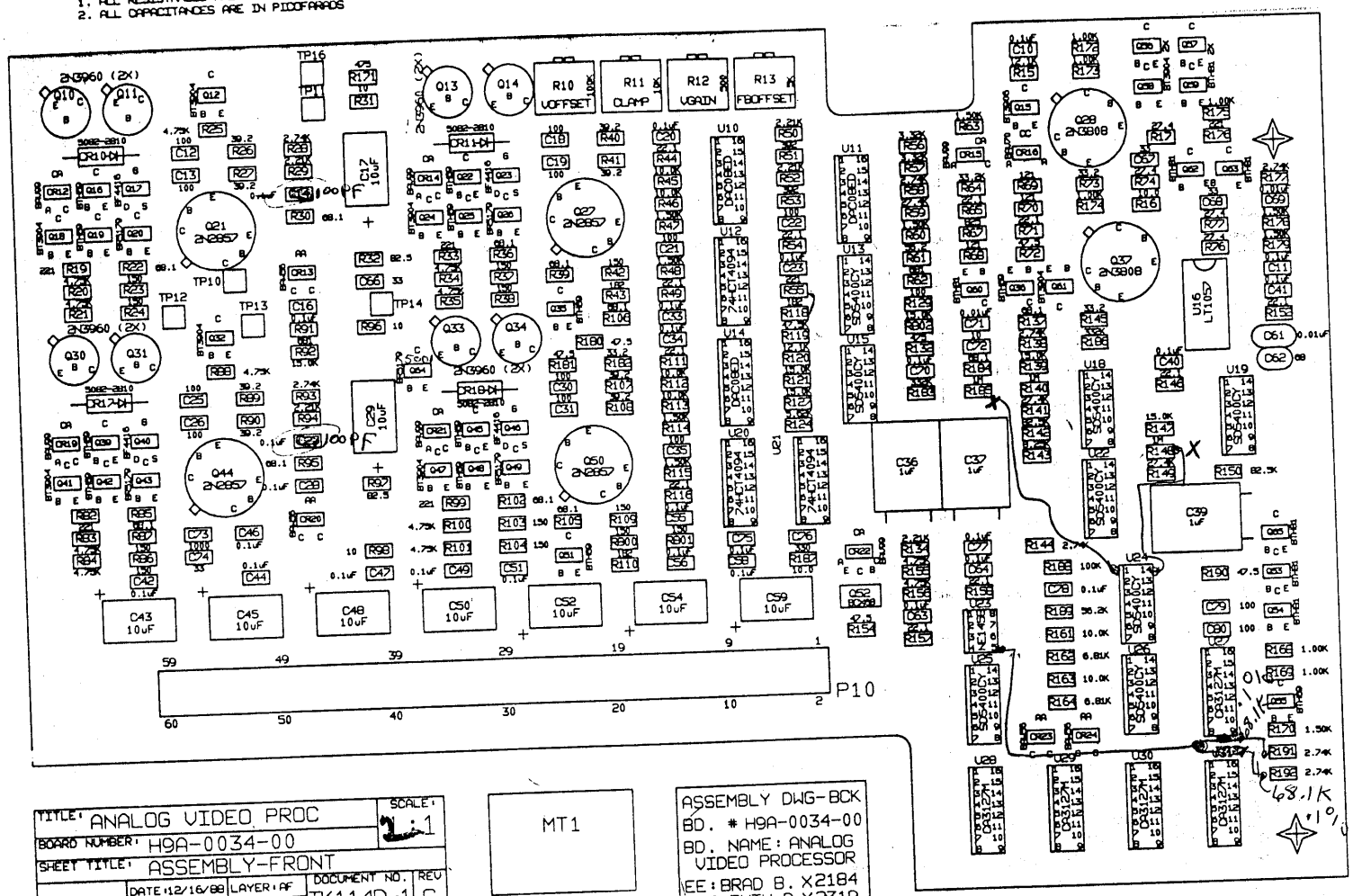

TITLE: ANALOG VIDEO PROC	SCALE: 2:1
BOARD NUMBER: H9A-0034-00	
SHEET TITLE: ASSEMBLY-FRONT	
TEXTRONIX	DATE: 12/16/88 LAYER: AF DESIGNED BY: B.ROWNTREE DOCUMENT NO. TK114D-1 REV C
COMPUTER-AIDED DESIGN BY SYNERTECH, INC.	
★ BLACK STAR=POS FILM	

ASSEMBLY DWG-BCK
BD. # H9A-0034-00
BD. NAME: ANALOG VIDEO PROCESSOR
EE: BRAD B. X2184
ECB: RUTH D. X2319
DATE 12/16/88 PROJECT # 2782
DRAWER #2-10

ECB	REVISION DATE

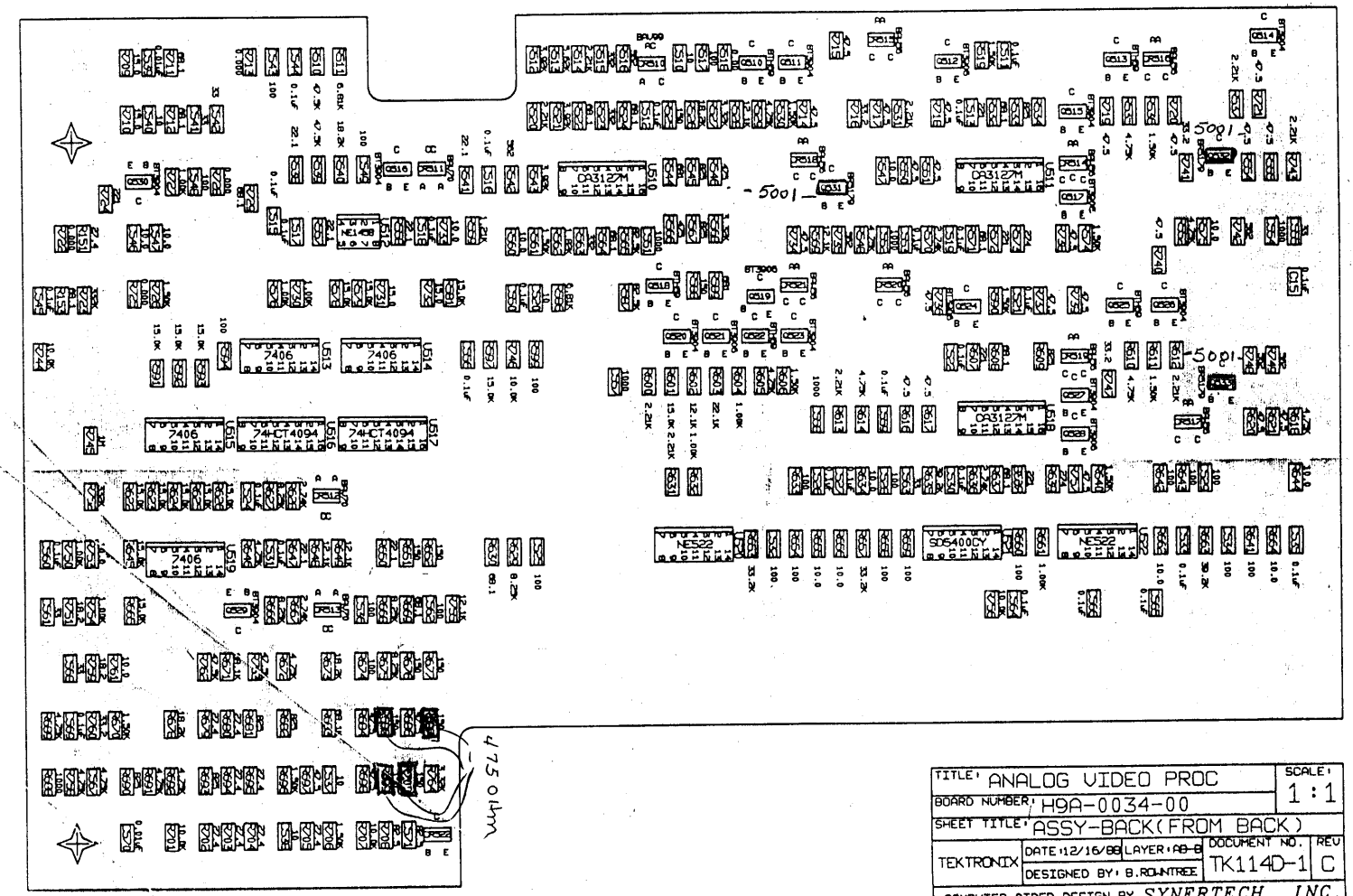

TITLE: ANALOG VIDEO PROC			SCALE: 1:1
BOARD NUMBER: H9A-0034-00			
SHEET TITLE: ASSY-BACK(FROM BACK)			
TEKTRONIX	DATE: 12/16/88	LAYER: ~~AB~~-B	DOCUMENT NO. TK114D-1 / REV C
	DESIGNED BY: B.ROUNTREE		
COMPUTER-AIDED DESIGN BY SYNERTECH, INC.			
★ BLACK STAR=POS FILM			

NOTES: UNLESS OTHERWISE INDICATED
1. ALL RESISTANCES ARE IN OHMS.
2. ALL CAPACITANCES ARE IN PICOFARADS.
3. ALL UNMARKED CAPS ARE .1uF.

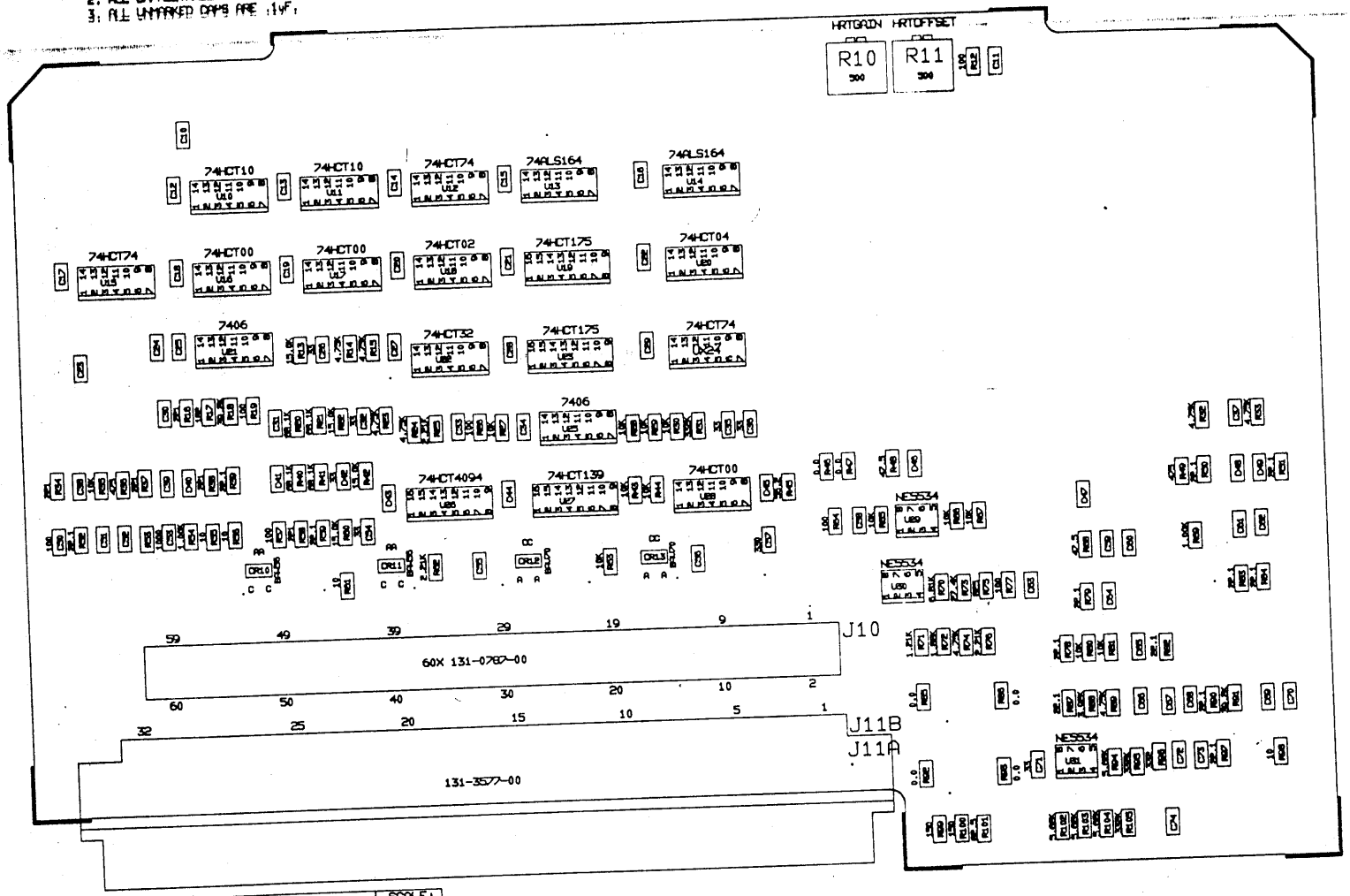

ASM DWG- FRONT
BD. #HC-9015-00
BD. NAME: DIGITAL VIDEO PROCESSOR
EE: B.BARNORE X 2184
ECB: R.DEUKER X 2319
DATE 2/13/89
DWR# 2-10 PROJ# 2782

ECB	REV. DATE

TITLE: DIGITAL VIDEO PROC		SCALE: 2:1	
BOARD NUMBER: HC-9015-00			
SHEET TITLE: ASSEMBLY-FRONT			
TEKTRONIX	DATE: 2/13/89	LAYER: AF	DOCUMENT NO. TK120D-1 / REV D
	DESIGNED BY: D. SEAMAN		
COMPUTER-AIDED DESIGN BY SYNERTECH, INC.			
★ BLACK STAR-POS FILM			

ML1

NOTES: UNLESS OTHERWISE INDICATED
1. ALL RESISTANCES ARE IN OHMS.
2. ALL CAPACITANCES ARE IN PICOFARADS.
3. ALL UNMARKED CAPS ARE .1uF.

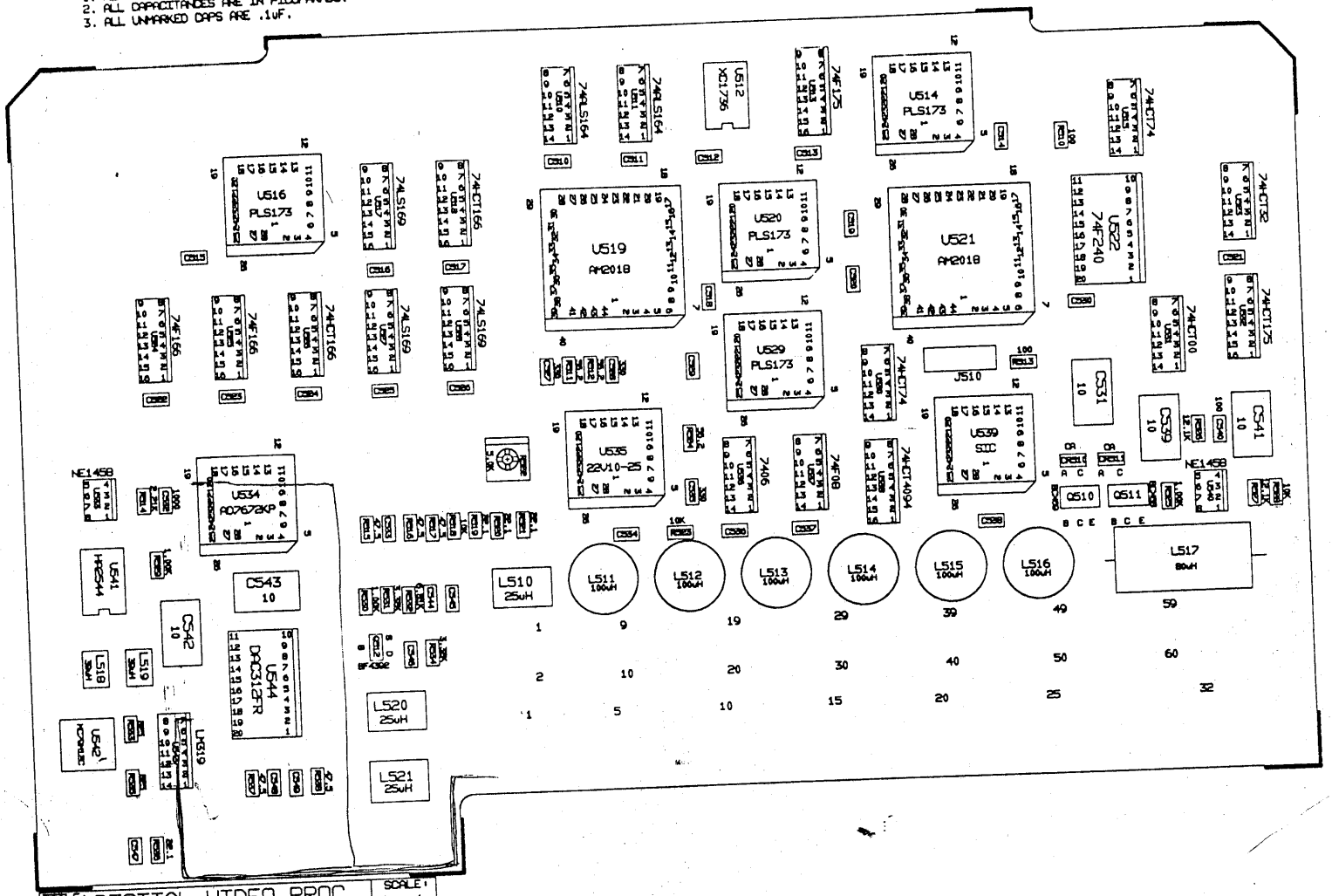

TITLE: DIGITAL VIDEO PROC			SCALE: 1:1
BOARD NUMBER: HC-9015-00			
SHEET TITLE: ASSEMBLY-BACK/BACK			
TEKTRONIX	DATE: 2/13/89	LAYER: AB/B	DOCUMENT NO. TK120D-1 / REV D
	DESIGNED BY: D. SEAMAN		
COMPUTER-AIDED DESIGN BY SYNERTECH, INC.			
★ BLACK STAR-POS FILM			

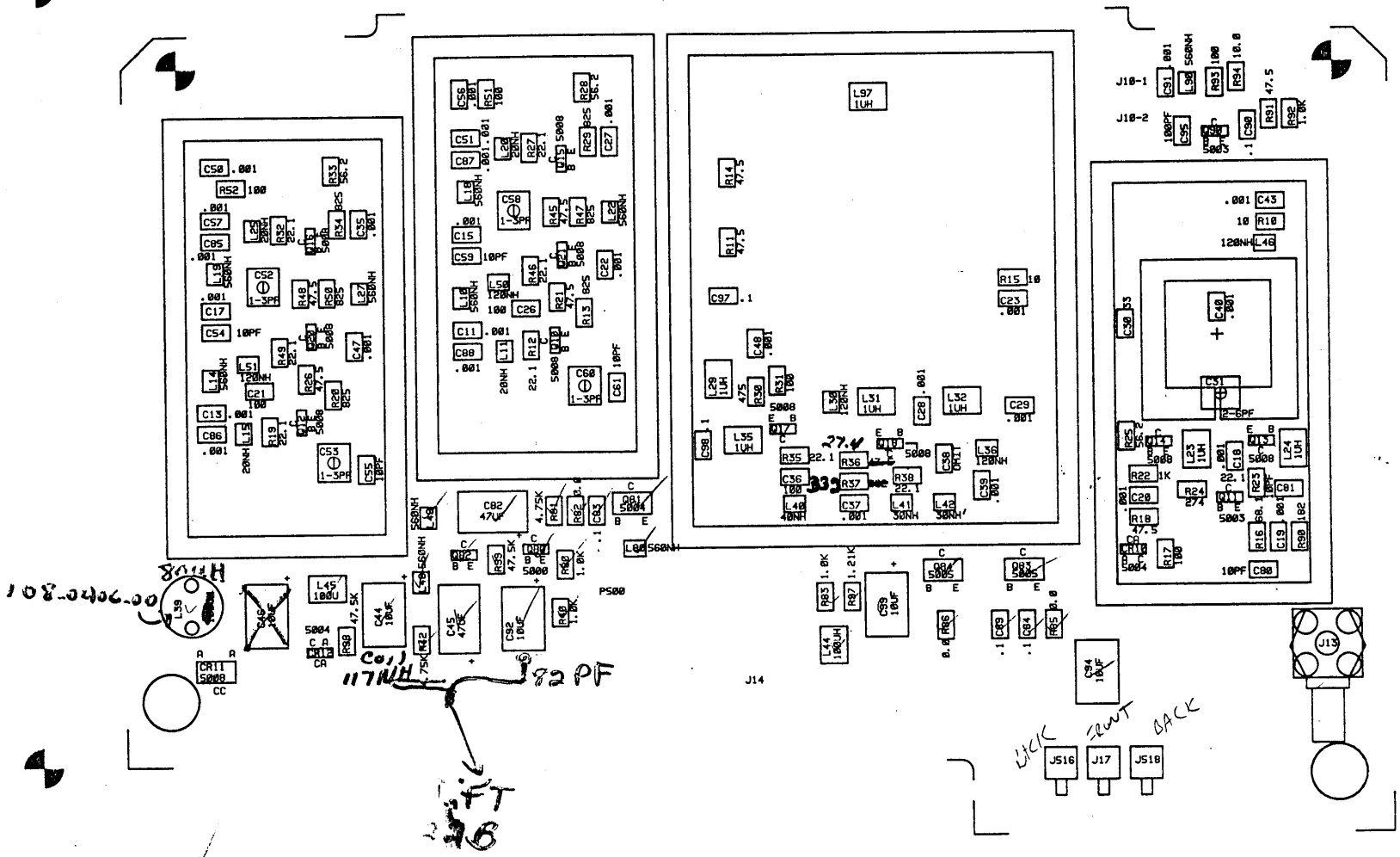

TITLE 5X MULTIPLIER				SCALE 1X
BD. NUMBER H-9362-02				
SHEET TITLE FRONT ASSEMBLY				
TEKTRONIX	DATE: 03/29/89	LAYER NO.	DOCUMENT NO. TK640-2	REV

ASSEMBLY DRAWING FRONT ONLY
BD# H-9362-02
BD NAME 5X MULTIPLIER
EE GORDON L. X 1461
ECB KEN N. X 1986
DATE 03/29/89 PROJECT

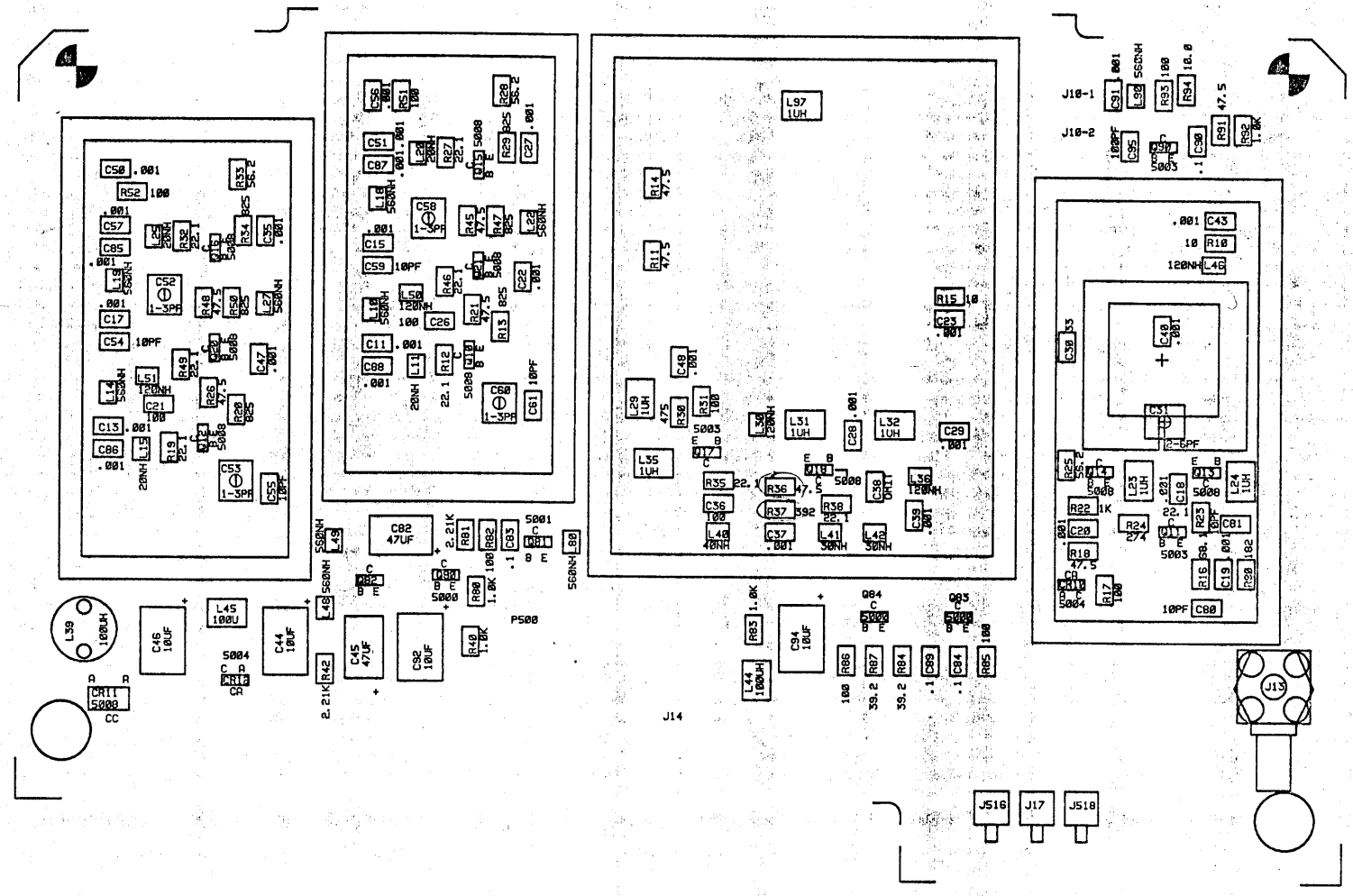

TITLE 5X MULTIPLIER				SCALE 1X
BD. NUMBER H-9362-01				
SHEET TITLE FRONT ASSEMBLY				
TEKTRONIX	DATE: 11/30/88	LAYER NO.	DOCUMENT NO. TK64C-1	REV F
	DESIGNED BY KN			

ASSEMBLY DRAWING FRONT
BD# H-9362-01
BD NAME 5X MULTIPLIER
EE GORDON L. X 1461
ECB KEN N. X 1986
DATE 11/30/88 PROJECT
DRAWER # 2782

TEKTRONIX	DATE: 11/30/88	LAYER NO.	DOCUMENT NO. TK7QC-1	REV E
	DESIGNED BY KN			

SHEET TITLE REAR ASSEMBLY(REAR VIEW)

BD. NUMBER H-9029-01

TITLE PERIOD COUNTER

SCALE X

BI DCK STAR - POS ETIM

ASSEMBLY DRAWING	REAR
BD#	H-9029-01
BD NAME	PERIOD COUNTER
EE	GORDON L. X 1461
ECB	KEN N. X 1986
DATE	11/30/88 PRO.
DRAWER #	1/6 27

E	C	B	REVISION DATE

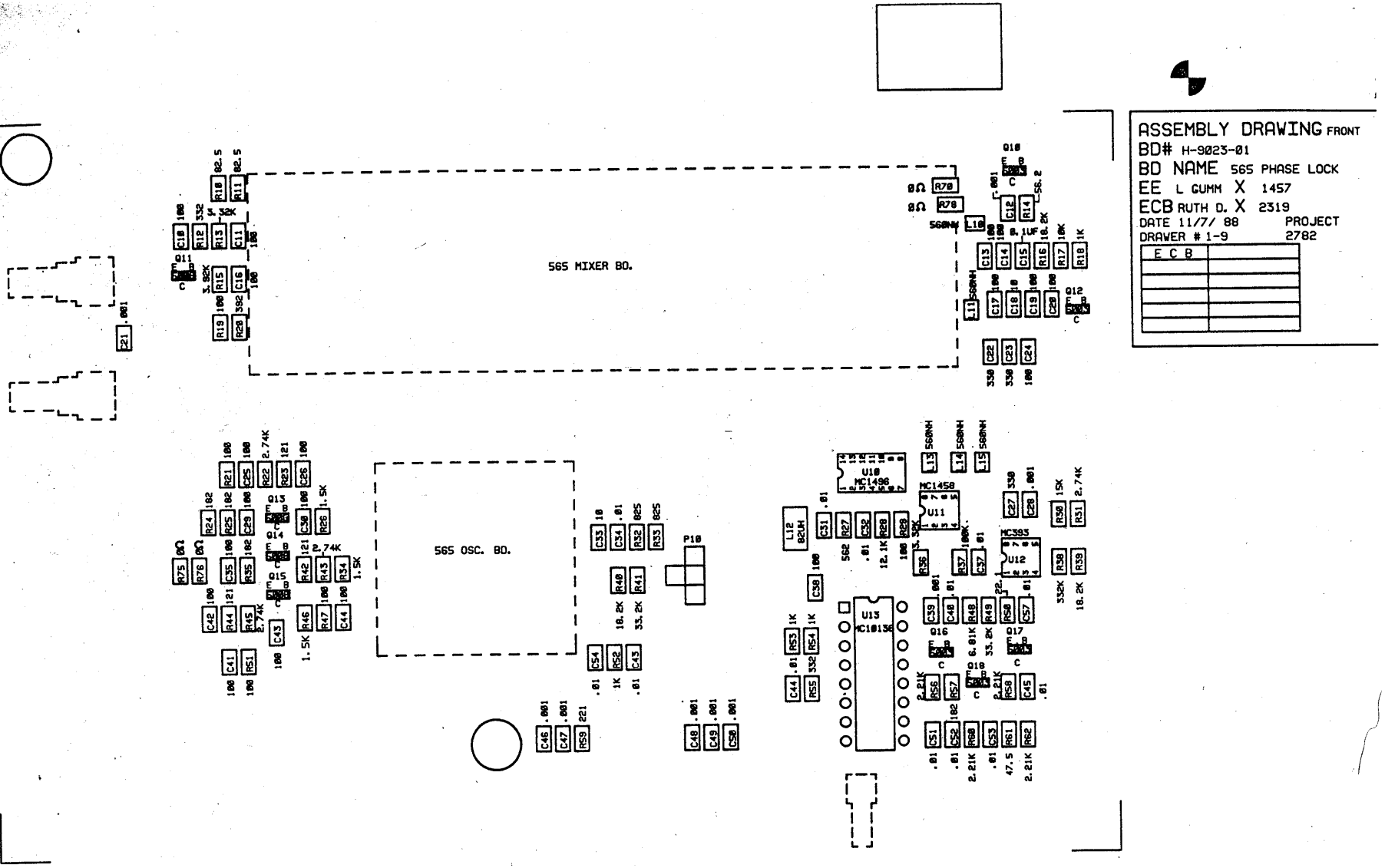

ASSEMBLY DRAWING FRONT
BD# H-9023-01
BD NAME 565 PHASE LOCK
EE L GUMM X 1457
ECB RUTH D. X 2319
DATE 11/7/ 88 PROJECT
DRAWER # 1-9 2782

E C B	

TITLE 565 PHASE LOCK				SCALE 2X
BD. NUMBER H-9023-01				
SHEET TITLE FRONT ASSEMBLY				
TEKTRONIX	DATE: 11/7/88	LAYER NO.	DOCUMENT NO. TK176C	REV E
	DESIGNED BY RD			

BLACK STAR - POS FILM

TEKTRONIX	DATE: 11/7/88	LAYER NO.	DOCUMENT NO. TK1750	REV E
	DESIGNED BY RD			
SHEET TITLE REAR ASSEMBLY (REAR VIEW)				
BD. NUMBER H-9025-01				SCALE 1X
TITLE SGS PHASE LOCK				

BLACK STAR - POS FILM

TEKTRONIX	DESIGNED BY RD	DATE: 05\09\89	LAYER NO.	DOCUMENT NO. TK1525C-1	REV H
SHEET TITLE REAR ASSEMBLY(REAR VIEW)				
BD. NUMBER H-9024-01					SCALE 1X
TITLE FRACTIONAL N SYNTHESIZER					

BLACK STAR - POS FILM

DIGITIZED BY SYNERTECH, INC DI

L7

BD# H-9024-01			
BD NAME FRACTIONAL N SYNTHESIZER			
EE LINLEY X 1457			
ECB RUTH O. X 2319			
DATE 05\09\89	PROJECT		
DRAWER # 1-7	2782		
E C B	REVISION DATE		

ASSEMBLY DRAWING REAR

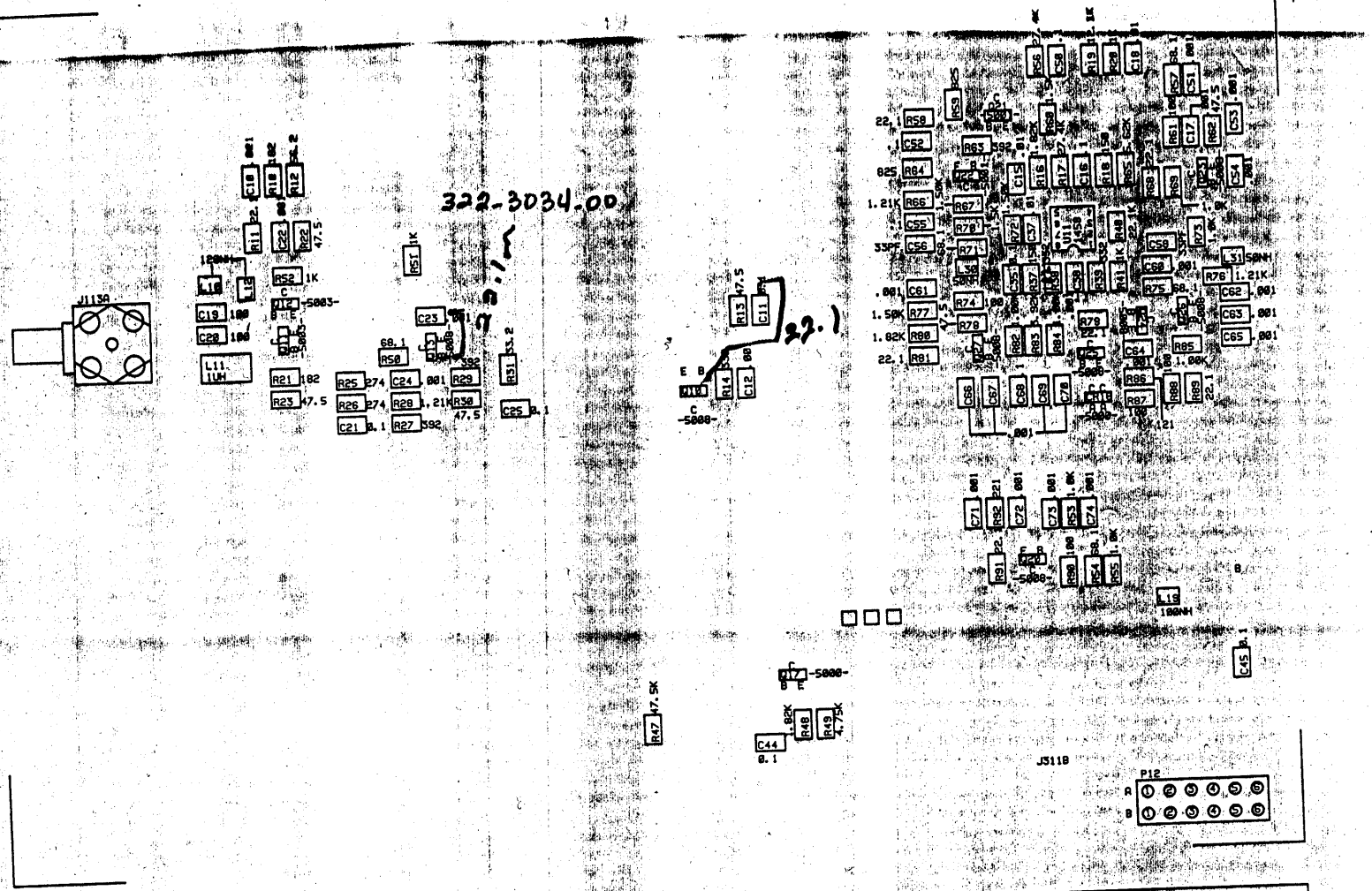

TITLE FRACTIONAL N SYNTHESIZER				SCALE 2X
BD. NUMBER H-9024-01				
SHEET TITLE FRONT ASSEMBLY				
TEKTRONIX	DATE: 02/09/89	LAYER NO.	DOCUMENT NO. TK152C-1	REV H
	DESIGNED BY RD			

ASSEMBLY DRAWING FRONT
BD# H-9024-01
BD NAME FRACTIONAL N SYNTHESIZER
EE LINLEY X 1457
ECB RUTH D. X 2319
DATE 02/09/89 PROJECT 2782
DRAWER # 1-7

E C B	REV.	DATE

BLACK STAR - POS FILM

DIGITIZED BY SYNERTECH, INC 01

L8

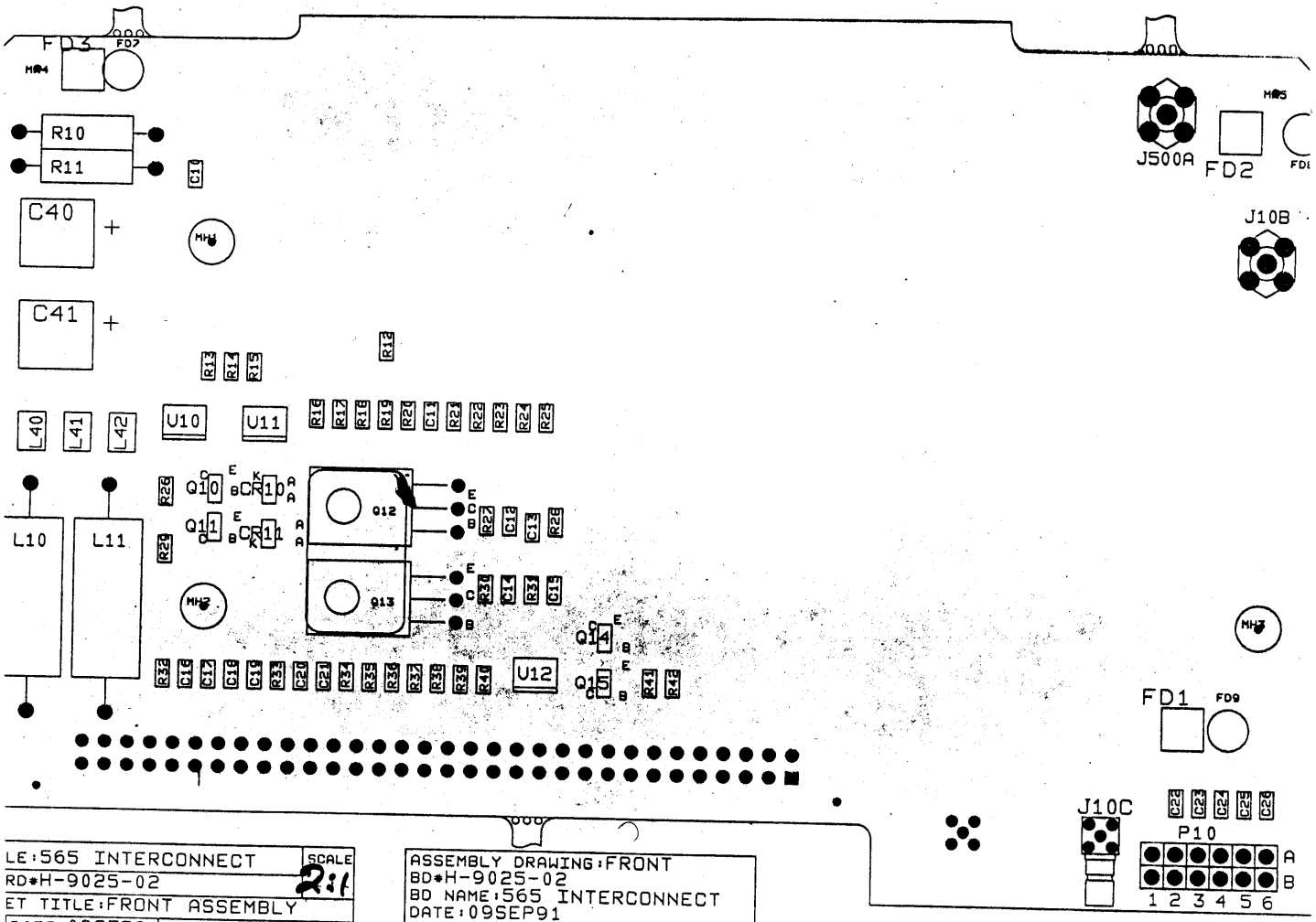

LE:565 INTERCONNECT	SCALE 2:1
RD#H-9025-02	
ET TITLE:FRONT ASSEMBLY	
DATE:09SEP91	LAYER#
DESIGNER:B PIMM	DOCUMENT# 0675
POSITIVE FILM	REV G

ASSEMBLY DRAWING:FRONT
BD#H-9025-02
BD NAME:565 INTERCONNECT
DATE:09SEP91

MOD#	REV DATE
M75640	08MAY91
	-

EE L GUMMX 1457
ECB B PIMMX 3812
PROJ 2782
DRAWER# 1-9

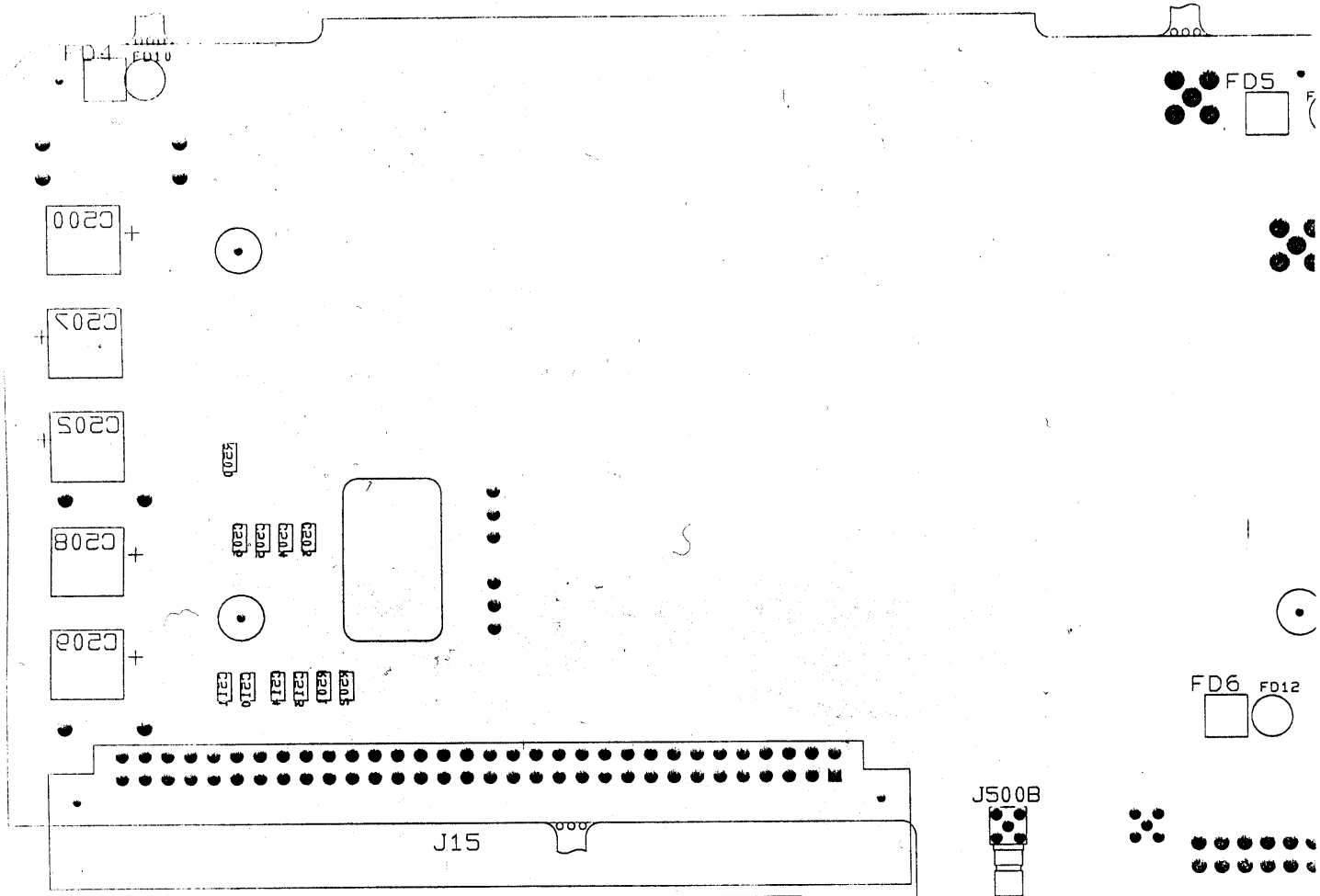

TITLE:565 INTERCONNECT		SCALE 1:1
BOARD#H-9025-02		
SHEET TITLE:REAR ASSEMBLY		
DATE:09SEP91	LAYER#	REV G
DESIGNER:B PIMM	DOCUMENT#	
POSITIVE FILM	0675	

ASSEMBLY DRAWING:BACK
BD#H-9025-02
BD NAME: 565 INTERCONNECT
DATE:09SEP91

MOD#	REV DATE	
M75640	08MAY91	EE L BUM X1457
		ECB B PIMM X3012
		PROJ 2782
		DRAWER# 1-9

NOTE: UNLESS OTHERWISE INDICATED
1. ALL RESISTANCES ARE IN OHMS
2. ALL CAPACITANCES ARE IN PICOFARADS

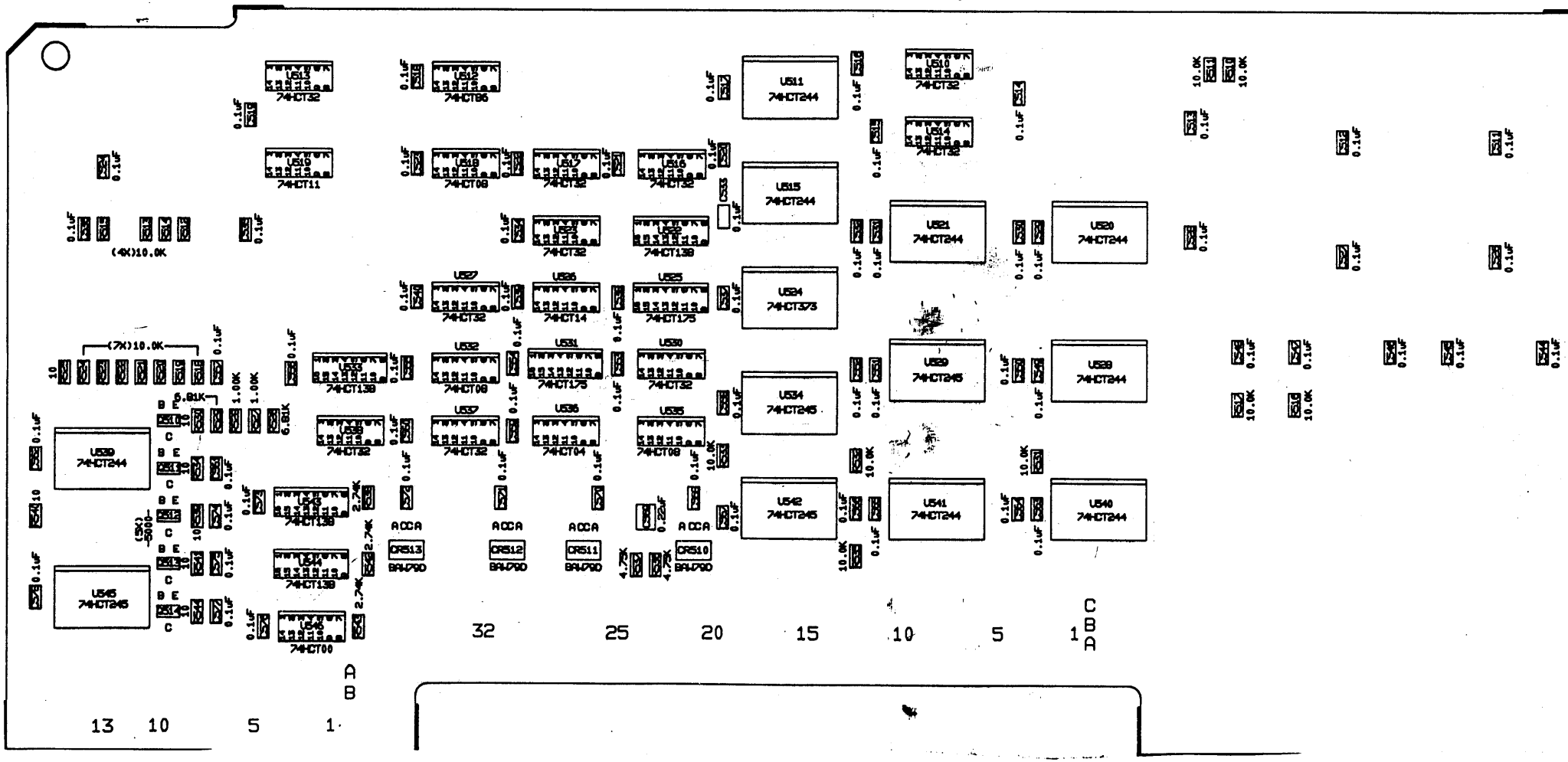
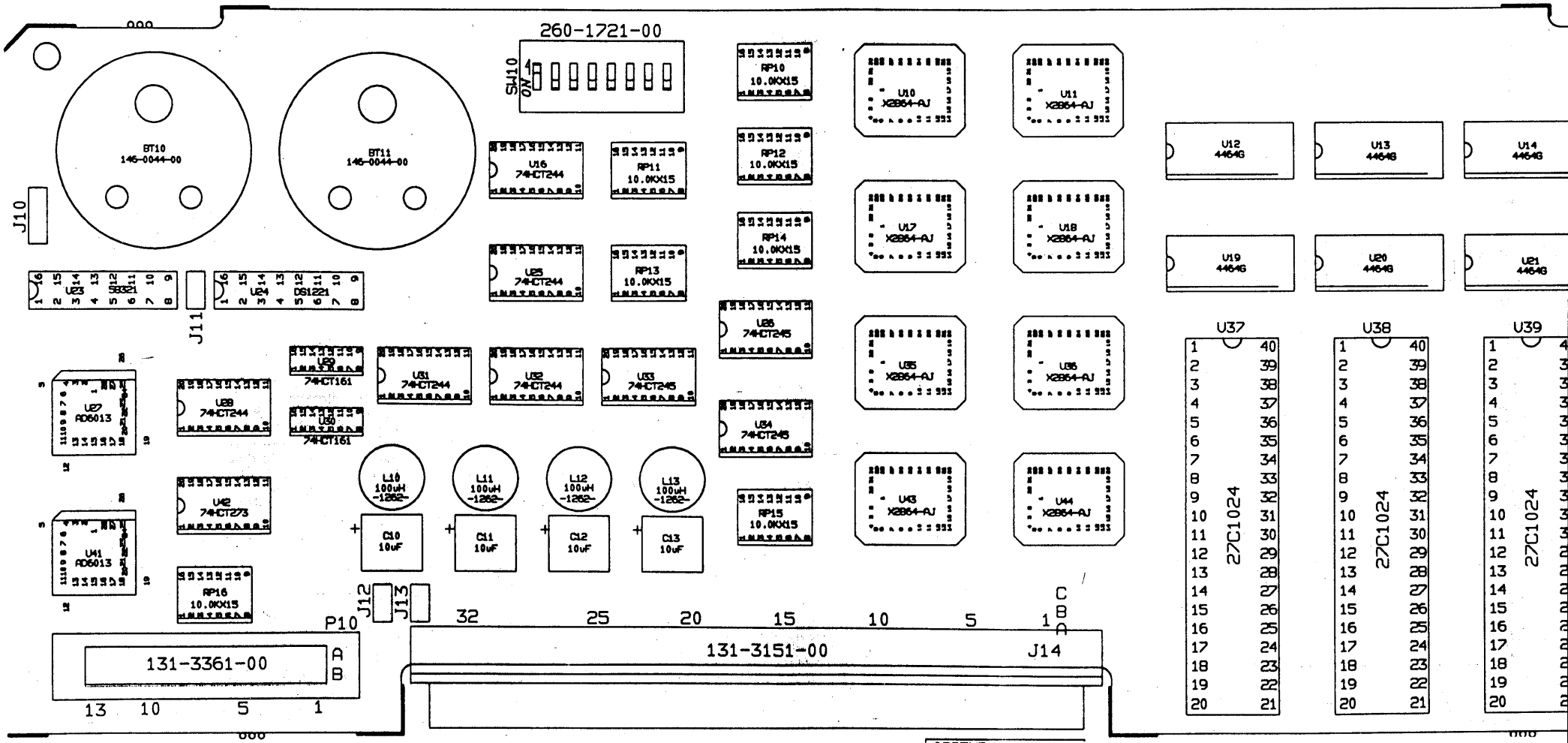
NOTE: UNLESS OTHERWISE INDICATED
1. ALL RESISTANCES ARE IN OHMS
2. ALL CAPACITANCES ARE IN PICOFARADS