TEKTRONIX®

413
NEONATAL MONITOR

INTERIM SERVICE

INSTRUCTION MANUAL

Tektronix, Inc.
P.O. Box 500
Beaverton, Oregon 97077

Serial Number _____

061-1542-00

WARRANTY

All TEKTRONIX instruments are warranted against defective materials and workmanship for one year. Any questions with respect to the warranty should be taken up with the TEKTRONIX Medical Products Sales Representative in your area. In all requests for repairs and replacement parts, please include the instrument Model Number, Option Number, and Serial Number.

Specifications and price change privileges reserved.

Copyright ©, 1977, Tektronix, Inc.
All Rights Reserved

Printed in the United States of America. Contents of this publication may not be reproduced in any form without permission of Tektronix, Inc., Beaverton, Oregon.

U.S.A. and foreign TEKTRONIX products covered by U.S. and foreign patents and/or patents pending.

TEKTRONIX is a registered trademark of Tektronix, Inc.

TABLE OF CONTENTS

PAGE

SAFETY INFORMATION

SECTION 1--GENERAL INFORMATION
Description.....1-1
Specification.....1-2

SECTION 2--OPERATING INFORMATION
Functions of Controls, Connectors, and Indicators...2-1
Front Panel.....2-1
Side Panel.....2-8
Rear Panel.....2-9
Operating Temperatures.....2-12

SECTION 3--CALIBRATION
Introduction.....3-1
ECG Leakage Check.....3-1
Adjustment Interval.....3-1
Partial Adjustment.....3-1
Test Equipment Required.....3-2
Preliminary Considerations.....3-10
Check/Adjust Procedure.....3-12
Purpose.....3-12
Using This Procedure.....3-12
Main Board Adjustments.....3-12
Operating Temperature.....3-12
Preliminary Check.....3-12
Preliminary Setup.....3-13
A. Power Supply and Crt Display.....3-14
B. ECG.....3-19
C. Respiration.....3-23
D. Digital Display.....3-25
E. Temperature.....3-27
F. Pressure/Pulse.....3-30
G. Rate.....3-34
H. ECG Leakage and Common Mode
Rejection Ratio (CMRR).....3-38

CIRCUIT-BOARD LOCATIONS

BOARD-PIN ASSIGNMENTS
ECG, J100
Respiration, J400
Pressure/Pulse, J600
DVM, J900
Conditioner, J1100
Recorder Interface, P2400

OPTIONS
Option 5 Description and Calibration
Option 20 Description
Option 5 Schematic Diagram
Option 20 Schematic Diagram

REPLACEABLE ELECTRICAL PARTS

SCHEMATIC DIAGRAMS AND CIRCUIT-BOARD ILLUSTRATIONS

SAFETY INFORMATION

The 413 Neonatal monitor has fully isolated ECG circuitry and is suitable for use with electrically susceptible patients when operated from either the specific ac power source or the internal battery pack. Respiration/ECG leakage current does not exceed 10 uA rms at 120 V, 60 Hz.

Electric appliances applied to a patient create hazards for both the patient and the operator unless the equipment is suitable for the application and the operator is skilled in its use. Several appliances used simultaneously compound the hazard situation. This manual contains informative and warning instructions that must be followed by the user to ensure safe operation and to retain the monitor in safe condition.

WARNING

The monitor is not explosion proof. When used in locations with flammable anesthetics, the monitor must be located at least five feet above the floor. See NFPA No. 56A, Standard for the use of Inhalation Anesthetics, 1973, paragraph 4516(c) for portable applications, and article 338, paragraphs 3381 and 3382 for fixed installation applications. 1 [footnote 1]

If the monitor is dropped or severly abused, it should be checked by qualified service personnel to ensure that the safety features are intact.

High voltage inside. Do not remove covers. Operating voltages can cause injurious or fatal electric shock. Refer servicing to qualified personnel.

The following list of accessories are recommended by Tektronix, Inc. for use with the 413 Neonatal Monitor. Do not use accessories other than those recommended.

Patient Cable:	Torso/Respiration Tektronix Part 012-0739-00
Adapter:	#4-40 fitting to female Luer. Tektronix Part 103-0108-00

Electrodes: Disposable snap-fit, infant monitoring.
Tektronix Part 119-0898-00

Needle, Grass platinum EZ/B, EEG type.
Available from Grass Instrument Company,
101 Old Colony Avenue, Quincy,
Massachusetts, 02169.

Electrode Wires: 18-inch detachable with snap, fittings.
Tektronix Part 012-0502-00

Pressure Transducers: -Gould Statham P-23 Id
Tektronix Part 015-0233-00

-Bentley Trantec 800
Tektronix Part 015-0234-00

-Bell & Howell 4327-I
Tektronix Part 015-0235-00

Peripheral Pulse Sensors: Radial Pulse sensor.
Tektronix Part 015-0237-01

Temperature Sensors: Dual-thermistor temperature probe.
Types 701 and 709 available from the
Yellow Springs Instrument Co., Box
279, Yellow Springs, Ohio 45387.

1[Footnote 1] Safety Documents

Additional safety information can be found under Safety Documents.

AC Power Source

The 413 is compatible with isolated power systems such as those used in operating rooms.

The monitor is intended to be operated from a single-phase earth-referenced power source having one current-carrying

conductor (the neutral conductor) near earth potential. Operation from power sources where both current-carrying conductors are live with respect to earth (such as phase-to-phase on a three-phase system) is not recommended, since only one conductor has circuit breaker protection within the monitor.

AC Power Cord and Plug

The monitor has a three-wire (No. 18 AWG) power cord with a three-terminal polarized "Hospital Grade" plug for connection to the power source and safety earth. The ground (earth) terminal of the plug is directly connected to the monitor frame. For electric shock protection, insert this plug only in a mating outlet with a safety-earth contact, and which is marked "Hospital Grade".

Inspect the power cord periodically for fraying or other damage, and repair as needed. Do not operate the apparatus from ac power with a damaged power cord or plug.

NOTE

The power cord on this monitor is color-coded to conform to IEC (International Electrotechnical Commission) requirements as follows:

Conductor	Color
Line (ungrounded)	Brown
Neutral (grounded)	Light blue
Safety-earth (grounding)	Green or green w/yellow stripe

Grounding

To assure protection against electrical shock whenever auxiliary, line-operated equipment (e.g., remote display) is electrically connected to the monitor, the monitor must be properly grounded. The monitor power cord provides the required ground when properly connected to a "Hospital Grade" outlet. Battery operation should be avoided when the monitor is interconnected with line-operated equipment. If it cannot be avoided, the monitor must be grounded using the GND binding post on the rear panel.

Interconnection with other equipment should be made in accordance with NFPA76B-T, Tentative Standard for the Safe Use of Electricity in Patient Care Areas of Health Care Facilities, section 3038, "Signal Transmission Between Appliances".

Pulse Sensors

Tektronix, Inc. offers two pulse sensors to meet various measurement requirements: the Finger sensor (Tektronix Part 015-0236-01) and the Radial sensor (Tektronix Part 015-0237-01). 1)

Pressure Transducers

The following pressure transducers have adequate isolation to withstand full ac line voltage with less than 10 uA leakage. Pressure transducers exceeding 10 uA leakage should not be used.

Trantec 800

Gould-Statham P23 Id

Bell & Howell 4-327 I-0109

Temperature Sensors

The monitor is intended for use with only Type 701 and 709 temperature probes manufactured by Yellow Springs Instrument Co., Box 279, Yellow Springs, Ohio 45387. These probes will withstand full ac power source voltage with less than 10 uA leakage. Probes other than the Yellow Springs Instrument Co. Types 701 and 709 should not be used with this monitor.

Outputs

Refer to preceding Grounding paragraph.

Safety Documents

For additional safety information, refer to the following documents and organizations:

Equipment Construction Requirements

1. Canadian Standards Association
   178 Rexdale Blvd., Rexdale, Ontario, Canada M9W 1R3
   CSA Standard C22.2, NO. 125 - 1973
   Electro-Medical Equipment

2. Underwriters Laboratories, Inc.
   1285 Wallwhitman Road, Melville, L.I., New York 11746
   UL544, Standard for Safety
   Medical and Dental Equipment

Equipment Usage Requirements
National Fire Protection Association (NFPA)
470 Atlantic Avenue
Boston, Massachusetts 02210

1. NFPA NO. 76B-T, 1973
   Tentative Standard for the Use of Electricity in Patient Care areas of Health Care Facilities

2. NFPA NO. 56A, 1973
   Standard for the Use of Inhalation Anesthetics

3. NFPA NO. 70, 1975
   National Electrical Code

Sterilization

CAUTION

DO NOT AUTOCLAVE ACCESSORIES (or the 413 Monitor) unless the manufacturer's instructions clearly approve this procedure. Many accessories can be severly damaged by autoclaving. Also, inherent isolation may be defeated.

PRESSURE TRANSDUCERS. All transducers recommended by Tektronix can be gas sterilized. However, adequate time must be allowed after sterilization for the ethylene oxide (which is absorbed by the plastics in the transducer) to be dissipated. Refer to the manufacturer's instructions.

Pre-sterilized, disposable domes are available for some types of transducers; contact the transducer manufacturer or his representative. These domes have an integral isolation diaphragm which prevents fluid contact with the transducer and thereby eliminates the need for transducer sterilization.

PULSE SENSORS. Usually pulse sensors do not require sterilization. Sensors can be cleaned by wiping with an alcohol-dampened pad.

TEMPERATURE SENSORS. Temperature sensors can be gas sterilized. However, adequate time must be allowed after sterilization for the ethylene oxide (which is absorbed by the plastics in the sensor) to be dissipated.

SAFETY INSPECTION

AC Power Cord and Plug

Inspect the power cord periodically for fraying or other damage, and repair as needed. Do not operate the apparatus from ac power with a damaged power cord or plug.

Electrode Wires

Broken or frayed electrode wires, or loose snap fittings may cause interference or loss of signal. Frequent electrical and visual checks should be made on cables and electrode wires. Particular attention should be paid to the point at which the wire enters the terminals, since flexure will eventually cause breakage of strands there. Wires may be electrically checked prior to patient attachment, using the ECG LEAD CHECK terminals on the right-hand side of the monitor.

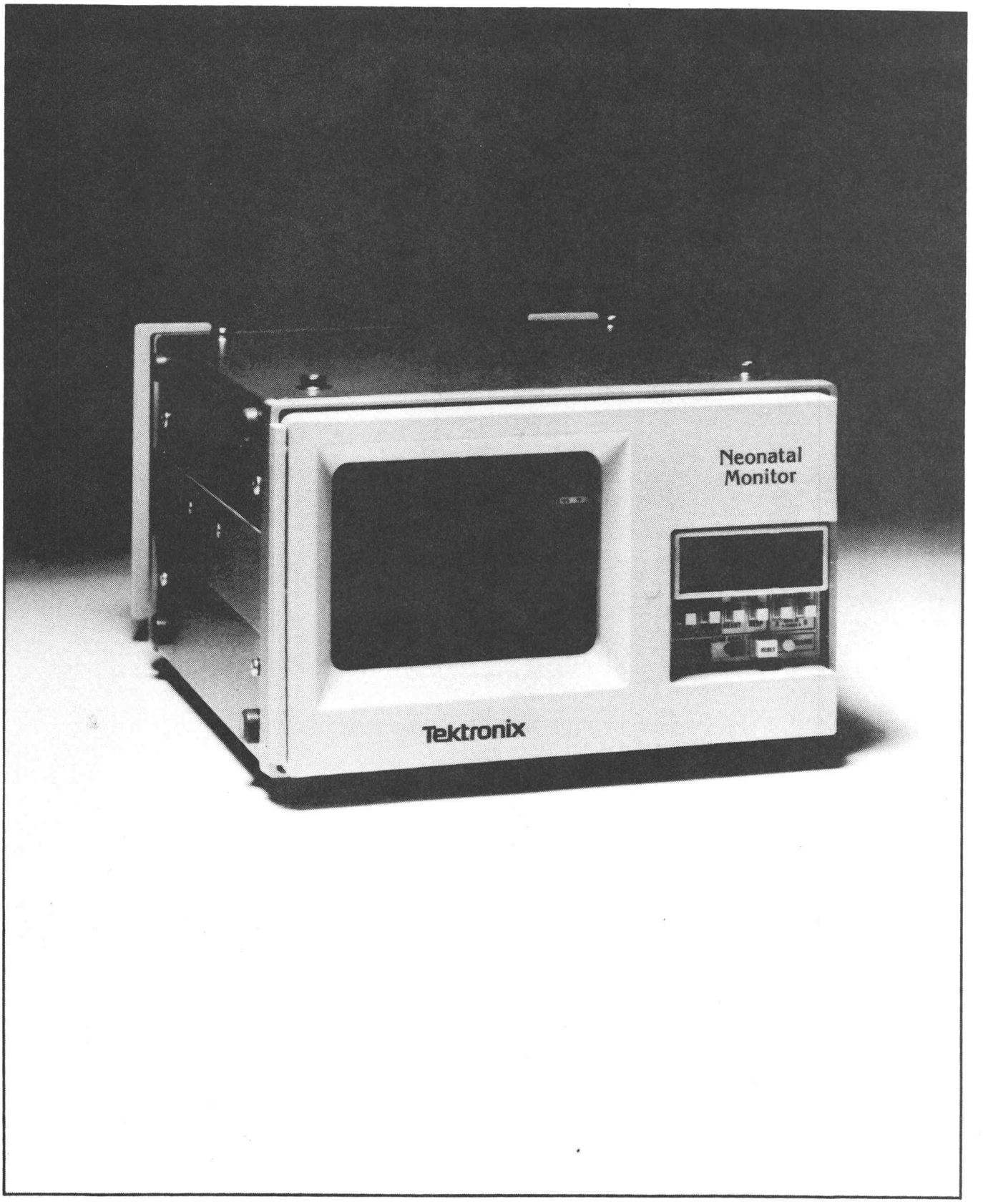

413 Neonatal Monitor

General Information

Description

The 413 is a portable neonatal monitor that displays ECG, blood pressure or perpheral pulse, and respiration rate. The digital readout displays systolic/diastolic blood pressure, mean blood pressure, heart rate, respiration rate or temperature. The monitor can be operated from an ac power line source, or the internal rechargable F-cell battery pack. On-location evaluation of common cable and electrode problems is provided by the ECG LEAD CHECK signal source and the LEAD FAULT indicator.

A three-trace display is provided for simultaneous viewing of the ECG, blood pressure or pulse, and respiration waveforms. The baseline trace is automatically positioned for the mode of operation selected. Trace intensity and focus are internally preset.

Adjustable alarm limits are provided for heart rate and respiration rate. There are independent controls for contineous-tone-alarm loudness and for beat-tone loudness. Seperate QRS and INSPIRATION detectors provide information for the rate alarms, rate digital display, and sweep triggering. A pulse alarm indicates pulse or pressure failure.

Other features include a color-changing LED (Light-Emitting-Diode) to indicate battery condition, and a Hospital Grade power plug (not moulded on the power cord).

SPECIFICATION

The following electrical characteristics apply over an ambient temperature range of 0° to 50° C when the monitor has been calibrated in a +25° C, ±5° C environment.

TABLE 1-1
Electrical

Characteristic	Performance Requirement	Supplemental Information
ECG TRANSFER CHARACTERISTICS		
Input to Display and Input to Output		
Lead Selector	OFF, I, II, III.	
Bandwidth	0.5 Hz to 50 Hz (Standard). 0.2 Hz to 50 Hz (Option 22).	
CMRR		Greater than 500,000:1 at 60 Hz with 15 kΩ maximum electrode resistance and 5 kΩ inbalance.
Input Signal DC Offset		No degradation of signals having up to 250 mV dc offset.
Overdrive Recovery	On screen within 1 second.	
Input to Display		20 mm/mV at index on SIZE knob; variable approximately X1/3 to X3.
Input to Output	X1000 gain.	Within 5% for ±5 V linear output range. ±10 V out, maximum during overdrive conditions. Less than 100 Ω R_O, single-ended output, shortproof to ground. Load resistance 100 kΩ minimum.
Isolation (ECG & Resp.)		
Leakage Current	Less than 10 μA rms at 120 V, 60 Hz ac.	
Self Protection (ECG & Resp)		
Defibrillator and Cauterizer	Instrument may remain connected to patient during defibrillation and electrocautery when used with Tektronix patient cable.	No damage to instrument when patient cable contains 1000 Ω in series with each electrode. Resistors in cable may open in extreme cases.
QRS Detector		
R Edge Timer		Self-adjusting between 5 and 8 ms (Std). Self-adjusting between 6 ms and 10 ms. (Opt 22).
Inhibit Timer		Set to 150 ms within 25 ms.

TABLE 1-1 (CONT.)
Electrical

Characteristic	Performance Requirement	Supplemental Information
RESPIRATION		
Input		
Leads Monitored	LA to RA, independent of ECG lead selector.	
Technique	Constant current impedance pneumography.	
Excitation Frequency		50 kHz ±20%.
Excitation Amplitude		70 μA RMS ±50%.
Patient Source Impedance	1.5 kΩ maximum @ 50 kHz.	
Transfer		
Input to Display and to Output		
Bandwidth		0.1 to 4 Hz (Std). 0.05 to 4 Hz (Opt 22).
Noise		Less than 0.1 Ω RMS at 750 Ω input source impedance.
Recovery from Overload		On screen within 2 seconds.
Input to Display Sensitivity	20 mm/Ω ±25% with SIZE control at index.	Variable from ÷3 to X3 with SIZE control.
Input to Output Sensitivity	0.5 V/cm of display ±25% with SIZE control at index.	Variable from ÷3 to X3 with SIZE control.
Isolation	Same as ECG.	
PRESSURE		
DISPLAY OFF	Pressure channel is always on except when PULSE pushbutton is depressed. Pressing DISPLAY OFF removes analog information from the crt.	
Ranges		
0-125	–25 to 150 mmHg.	All three ranges can provide up to one centimeter of display for vacuum and one centimeter of display above top of marked scale.
25-75	15 to 85 mmHg.	
0-25	–5 to +30 mmHg.	
Display Accuracy		Within 5% of full scale, analog.
Analog Output	–0.5 V to +3.0 V full scale on each range.	Within 5% of full scale on each range. Load resistance 100 kΩ, minimum.

TABLE 1-1 (CONT.)
Electrical

Characteristic	Performance Requirement	Supplemental Information
Excitation	±8 V, pulsed.	Approximately 1 ms each cycle.
Chop Rate		Approximately 62.5 Hz ±6.25%.
Bandwidth		Dc to approximately 20 Hz.
100 mm Check	100 mmHg. Confirms system function and sensitivity.	Within 2%.
PULSE		
SIZE Control Range		Approximately 25:1.
Analog		±3.0 V maximum (0.5 V/cm of display). Load Resistance 100 kΩ minimum.
Overdrive Recovery		On screen within 4 seconds.
Digital Display		Blanked for SYST/DIAST or MEAN selection which are invalid for pulse.
TEMPERATURE		
Probe Compatibility	Yellow Springs Instrument Co. 700-Series Temperature probes.	
Range	−5° to +45° C or +23° to +113° F.	
Scale Selection	°C or °F rear-panel switch selectable.	
Internal Analog Voltage Accuracy	Equal to or less than ±0.5° C or ±0.9° F, including probe error, for measured temperatures between +5° C and +45° C or +41° F and +113° F. This applies for full instrument ambient temperature range of 0° C to +50° C. If ambient temperature is limited to between +15° C and +35° C, error is equal to or less than ±0.3° C or ±0.5° for stated conditions.	
Temp A−Temp B	The accuracy of the subtraction circuit will yield ±0.6° C (1.0° F) for the limited range of +15° C to +35° C.	
ALARM LIMITS		
HIGH RATE	90-240 beats/minute or 45-120 breaths/minute (Option 22, 15-40 breaths/minute). Setting can be verified on digital display.	Press limit control for digital reading. Automatically displaces other information on digital display for immediate reading.

TABLE 1-1 (CONT.)
Electrical

Characteristic	Performance Requirement	Supplemental Information
LOW RATE	<30-150 beats/minute or <5-75 breaths/minute (Option 22, <5-25 breaths/minute). Setting can be verified on digital display.	Press limit control for digital reading. Automatically displaces other information on digital display for immediate reading.
Violations	Alarm is triggered when the average rate remains outside of the selected limits for 3-15 seconds.	Rate signal output must be continuously in high or low violation between 2.7 and 17.5 seconds to allow for alarm delay to expire and cause an indication.
Pulse	Alarm is triggered when average pulsitile pressure (Systolic minus Diastolic) remains below 10-15 mmHg for 3-15 seconds or when pulse signal amplitude remains below 0.3 to 0.5 cm for 3-15 seconds.	
Apnea	Alarm is triggered when no breaths are detected for 15 or 30 seconds (selectable).	
Alarm Output		
Rear Panel	Signal provided between ring and barrel of rear panel phone jack.	12 mA current source output; voltage limited at approximately +5.5 V, +7 V maximum.
Front Panel	ALARM Lamp lights (yellow); Audio tone sounds continuously.	
Alarm Reset		
Rear Panel (remote)	Switch closure between tip and barrel of phone jack on rear panel will reset alarm, if violation has cleared.	Maximum current "sink" required: 100 μA. Input is ac-coupled so that short to ground (barrel) will not disable alarms.
Front Panel	Clears audio for 45 seconds (±15 s); ALARM Lamp remains on until violation clears. Audio clears when violation clears independent of reset action.	
DIGITAL DISPLAY	0.33 inch high, gas discharge.	
Update Time	When violation clears, independent of reset action.	Between 0.75 second and 1.25 seconds except during over-range or push-to-read function.
Overrange	Warns of possible erroneous data.	Flash rate and update rate 5 Hz ±50%. Rate: Between 250 and 300 bpm, and two rate-trigger occurrences less than 200 ms apart will cause temporary overrange. Pressure: Above +3.5 V and below −0.5 V on analog signal. Temporary indication if peak violates scale ends. Temperature: Between −10° and −5° C and between +45° and +50° C (+14° and +25° F, +113° and +122° F).

TABLE 1-1 (CONT.)
Electrical

Characteristic	Performance Requirement	Supplemental Information
Polarity	+ and – signs automatically displayed in pressure and temperature modes.	
Zero Suppression		All leading zeros are blanked except the one just preceding the decimal.
Rate		
Heart		
Range	30 to 250 bpm.	
Overrange Indication	Readout flashes.	Any R-R interval corresponding to >300 bpm, ±10%.
Accuracy	2% of reading or ±3 bpm, whichever is greater.	
Response	10 seconds to step function change in signal.	Within 2% of final reading.
Ripple		1 bpm at 30 bpm.
Source	ECG whenever channel is on. PRESSURE or PULSE when ECG is OFF.	
Respiration		
Range	5-120 breaths/minute.	
Overrange Indication	Readout flashes.	Any breath-to-breath interval corresponding to >150 ±10% breaths/min.
Accuracy	±3 breaths/min.	
Response	30 seconds to step function change in signal.	Within 5% of final value.
Ripple		1 breath/min at 5 breaths/min.
Pressure	Displays digital information independent of DISPLAY OFF switch position.	Reading appears automatically on readout for all pressure functions, except pulse. Pulse causes readout to blank. Also readout is blanked when pressure transducer is not connected.
Range	–25 to +175 mmHg. +20 to +95 mmHg. –5 to +35 mmHg. As selected by analog display switch.	Overrange indicates if signal is beyond range limits.
Accuracy	2% of reading or ±3 mmHg whichever is greater, excluding transducer error and zero balance.	

TABLE 1-1 (CONT.)
Electrical

Characteristic	Performance Requirement	Supplemental Information
Systolic-Diastolic	Alternates between two readings.	Cycle rate: Systolic 0.9 second; blank 0.1 second; Diastolic 0.9 second; blank 1.1 second; 3.0 seconds Response is about 10 seconds to step function change. Within 2% of final reading.
Mean		Response is about 10 seconds to step function change. Within 2% of final reading. Ripple is approximately 1.0 mmHg at 30 beats per minute. SYST/DIAST Peaks must be within the selected range.
Zero	Set with front panel control. Pressing control allows zero reading to be viewed on digital display.	
Temperature		
Range	-5° to $+45^\circ$ C or $+23^\circ$ to $+113^\circ$ F. Rear panel switch selectable.	
T_A or T_B	$\pm 0.3^\circ$ C or $\pm 0.5^\circ$ F over a range of $+5^\circ$ to $+45^\circ$ C or 41° to 113° F for instrument ambient temperature between $+15^\circ$ and $+35^\circ$ C. $\pm 0.5^\circ$ C or $\pm 0.9^\circ$ F over same range for instrument ambient temperature between 0° and $+50^\circ$ C.	With Yellow Springs Instrument Co. Series 700 probes.
$T_A - T_B$	$\pm 0.6^\circ$ C or $\pm 1.0^\circ$ F over range of $+5^\circ$ C to $+45^\circ$ C or $+41^\circ$ F to $+113^\circ$ F for instrument ambient $+15^\circ$ C and $+35^\circ$ C.	
Response		Within 0.1° C or 0.2° F of final reading one second after step function change in probe output.

TABLE 1-1 (CONT.)
Electrical

Characteristic	Performance Requirement	Supplemental Information
TRIGGERING		
Source	ECG if ECG channel is on, otherwise from PRESSURE/PULSE channel.	
Auto Baseline		1.8 to 9 seconds delay after last trigger (baseline in absence of trigger).
DISPLAY MODES	ECG only, PRESSURE/PULSE only, RESPIRATION only. Chop between any two or all three.	
SWEEP		
Speeds	12.5, 25, 50, 100 mm/second.	
Accuracy		Within 5% of reading, rated against heart rate scale of 35 to 120 beats/minute on 50 mm/SEC range, +15° to +35° C.
Triggering	25 mm/second free-run, 50 mm/second & 100 mm/second triggered.	
AUDIO		
Alarm	Continuous Tone.	Approximately 2 kHz.
Beat	Burst of same tone as alarm.	
Loudness	Independent controls for alarm and beat.	
ECG LEAD CHECK		
Pulse Amplitude	0.5 mV, Lead III.	Within 5%.
	1.0 mV, Lead I.	Within 5%.
	1.5 mV, Lead II.	Within 5%.
LINE VOLTAGE		
Range	115 V ac.	103.5 to 136 V ac.
	230 V ac.	207 to 250 V ac.
Frequency	48 to 440 Hz.	
AC POWER		
Current	0.45 A maximum at 115 V ac to 60 Hz.	
VA	45 VA maximum at 115 V ac to 60 Hz.	

TABLE 1-1 (CONT.)
Electrical

Characteristic	Performance Requirement	Supplemental Information
INTERNAL BATTERY (F cells)		
Operating Time	1.5 hours minimum with new battery.	Three-trace mode with pulse sensor.
Recharge Time	Approximately 16 hours.	At 700 mA (with F cells).
CHASSIS CURRENT LEAKAGE	Less than 25 μA.	120 V, 60 Hz "green wire" current.
		Measure with 1 kΩ in path.
POWER CORD and PLUG	Plug is Hospital Grade, cord meets IEC color code requirements.	Line-brown, neutral-light blue, Safety Earth-green with yellow stripes.
Isolation, Primary to Secondary and Primary to Core		1500 V rms minimum at 60 Hz without breakdown.
CRT		
Phosphor	P7.	

TABLE 1-2
Environmental

Characteristic	Performance Requirement	Supplemental Information
AMBIENT TEMPERATURE		**CAUTION**
Operating	0° to +50° C.	*The reliability and operating life of the digital display devices may be significantly and permanently reduced if they are operated below 0° C (+32° F) for more than a few minutes. When the instrument is operating, infrequent ambient temperature excursions slightly below 0° C can be tolerated. This is due to inherent self-heating from the instrument and the device itself.*
		NOTE
		Battery charging should be done in an environmental temperature between 0° and +25° C. The greater the temperature above +25° C the less charge the battery will accept, regardless of attempted compensation through extended charge time. Internal temperature sensing circuit prevents battery charging in ambient temperature above ≈ 31° C when monitor is operating and above ≈ 48° C when monitor is off.
Storage	−40° to +60° C.	
ALTITUDE	To 15,000 feet.	

TABLE 1-3
Physical

Characteristic	Description
Weight	
414, No Battery	13 lb (6 kg).
With D-Cell Battery-Pack	16 lb (7 kg).
Height	5.6 inches (14.1 cm).
Including Feet and Snaps	6.0 inches (15.3 cm).
Width	9.0 inches (23.1 cm).
Including Handle	9.4 inches (23.9 cm).
Including Handle and Adapter	10.3 inches (25.5 cm).
Depth	10 inches (25.6 cm).
Including Cord Wraps and Front Cover	12.5 inches (31.8 cm).

FUNCTIONS OF CONTROLS, CONNECTORS AND INDICATORS

413 Front Panel (Figs. 2-1, 2-2)

(1) On. This pushbutton switch turns the monitor on or off. The battery charger operates continuously as long as the monitor is connected to an ac power source.

(2) BEAT LOUDNESS. This control adjusts the loudness of the beat tone and should be set fully clockwise if maximum loudness is desired. The beat is heard once for each QRS pulse during ECG use, or once for each rising portion of the pulse waveform during pulse operation (or pressure waveform in the pressure mode of operation).

(3) SWEEP SPEED mm/SEC. Four pushbuttons select the speed of the trace across the screen. The sweep speeds are 12.5, 25, 50, or 100 mm/SEC. The total time it takes the trace to cross the screen is 8, 4, 2, or 1 seconds, respectively.

(4) APNEA ALARM AND DELAY. Loss of respiration for longer than 15 seconds or 30 seconds activates the alarm when the APNEA ALARM pushbutton is depressed. The alarm is delayed 15 seconds with pushbutton out (released) and 30 seconds with pushbutton in (depressed).

(5) SOURCE. This pushbutton switch selects the RATE ALARM signal source. With the SOURCE switch out (released) the RATE ALARM receives a heart-rate related signal from the ECG channel (providing the ECG channel is on). If the ECG channel is OFF, the signal source is from the PRESSURE/PULSE channel. With the SOURCE switch pushed in (depressed) the RATE ALARM receives a respiration-rate related signal from the RESPIRATION channel.

(6) LOW RATE LIMIT. This control sets the lower rate alarm limit between 5 and 75 beats per minute for respiration, or 30 and 150 beats per minute for heart rate. For more accurate setting, press control in while adjusting and set desired value on digital display. This control also disables the RATE ALARM circuit when rotated fully counterclockwise into its detent.

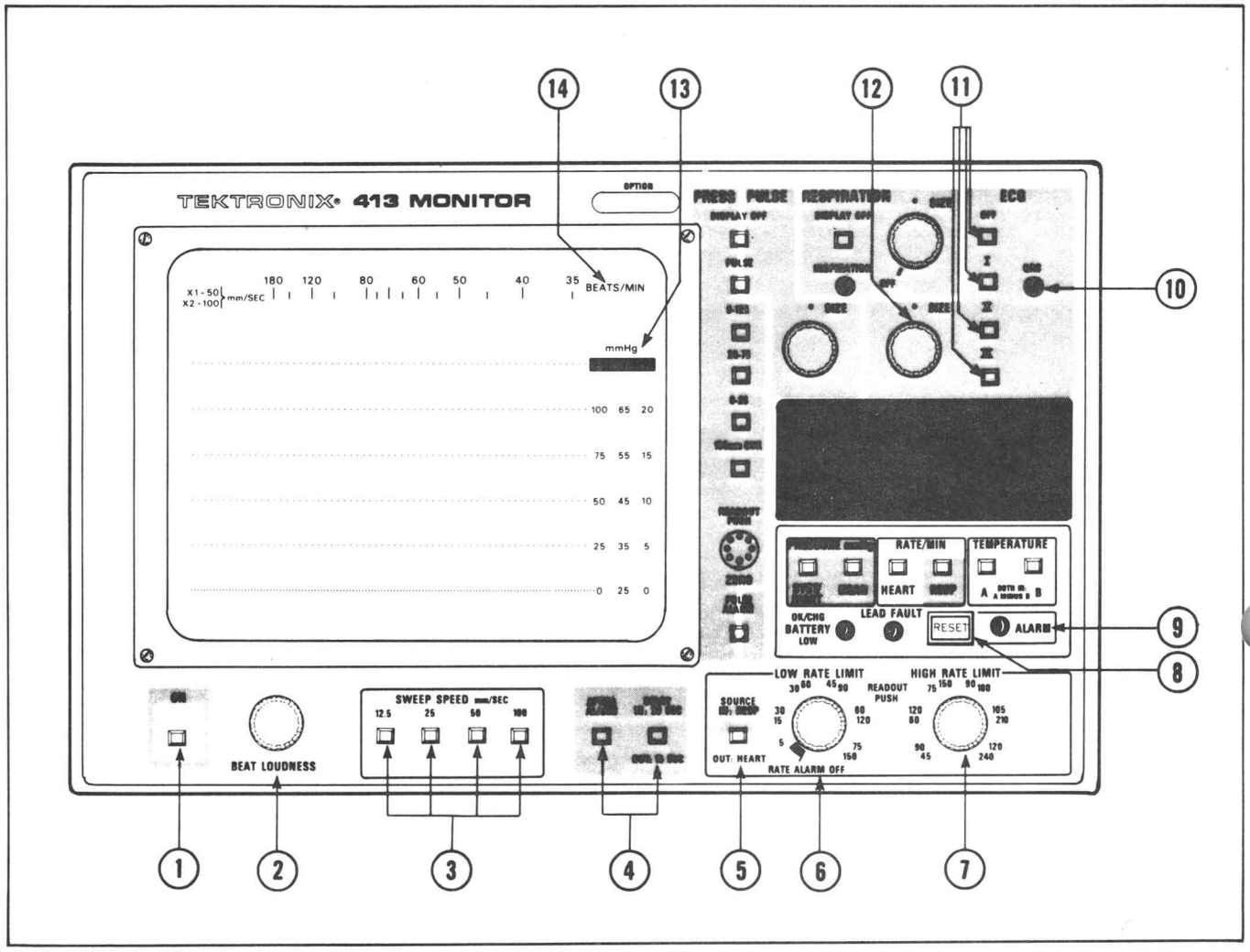

Figure 2-1. Front panel controls and indicators (1 through 14).

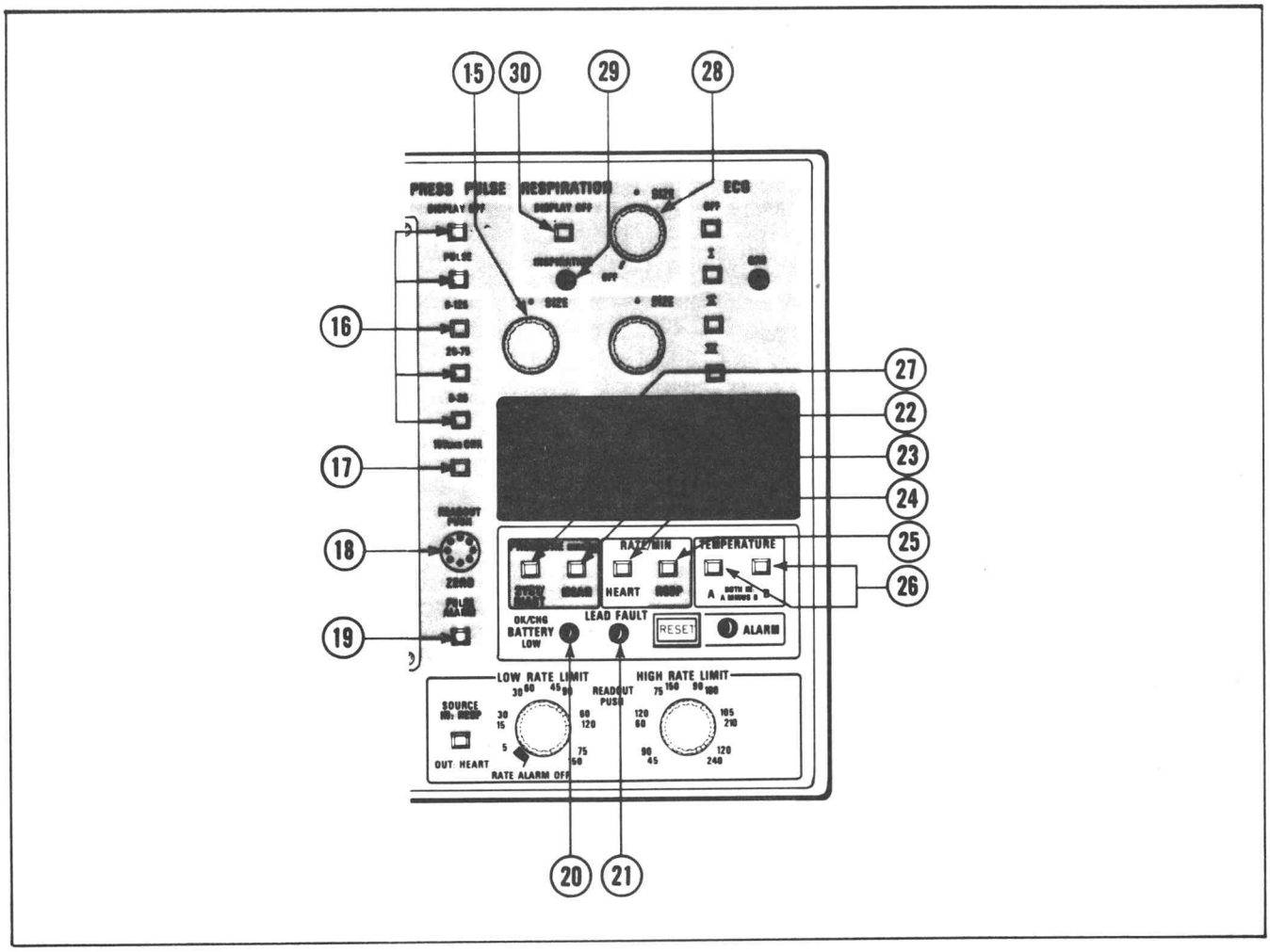

Figure 2-2.. Front panel controls and indicators (15 through 30).

(7) HIGH RATE LIMIT. This control sets the upper rate alarm limit between 45 and 120 beats per minute for respiration, or 90 and 240 beats per minute for heart rate. For more accurate setting, press control in while adjusting, and set desired value on digital display.

(8) ALARM RESET. This pushbutton resets the alarm. When an alarm violation occurs, the audio alarm will sound and the indicator will light. Reset the audio alarm by pressing the RESET button. If the condition which caused the alarm persists longer than 45 seconds after being reset, the audio alarm will reoccur and the RESET button must be pressed again. If the alarm was the result of an acceptable change in patient condition, then press the RESET button and select new RATE LIMITS.

(9) ALARM Light. ALARM indicator lights (and audio sounds) whenever an alarm condition occurs. Press the RESET button to temporarily silence the audio alarm; the ALARM light will remain on until the alarm violation disappears, and the RESET button is again pressed.

(10) QRS Light. Flashes each time a QRS wave is detected in the ECG.

(11) ECG. Pushbuttons control the lead selection for ECG. They are I, II, and III. The four pushbuttons control the display on the upper half of the screen (providing any combination of the PRESSURE, PULSE, or RESPIRATION channels are also displayed). If only ECG is on, the display will move to the screen center. The OFF pushbutton turns off the ECG display.

(12) ECG SIZE. This control varies the height of the ECG waveform display. The ECG OUTPUT signal is not affected by the SIZE control.

(13) Pressure Scale (Deleted With Option 20). The three pressure scales correspond to the PRESSURE range selected; 0-25, 25-75, or 0-125 mmHg. The vertical portion of the pressure signal is compared to the appropriate scale to determine pressure amplitude in mmHg.

(14) BEATS/MIN Scale. The BEATS/MIN scale is used with the 50 mm/SEC and 100 mm/SEC SWEEP SPEED. The scale shows the correct display multiplier for the sweep speed selected. This scale is not usable on the 12.5 mm/SEC, or 25 mm/SEC sweep speeds since the sweep is not synchronized at those speeds. At certain heart rates, a spot appears on the left edge of the display. This is the starting point of the sweep, which has been reset and is awaiting the next synchronizing event. Any vertical movement of this spot is an accurate indication of the events prior to sweep start.

(15) PULSE SIZE. This control varies the height of the pulse display when the pulse mode of operation is being used. The PRESSURE/PULSE OUTPUT signal (PRESSURE deleted with Option 20) varies as the display signal varies during the pulse mode of operation. Small signals (one-half division of display or less) may not cause a beat tone and may set off the pulse alarm (when the ECG channel is off and the pulse channel is providing the beat information). Display amplitudes that go off the screen may cause extra beats to be heard. Adjust the PULSE SIZE control for a two to three centimeter display where possible.

(16) PRESS/PULSE (PRESSURE Deleted With Option 20). Five pushbuttons control the PRESSURE or PULSE display. They are DISPLAY OFF, PULSE, 0-125, 25-75, and 0-25. DISPLAY OFF turns off the PRESSURE/PULSE waveform display; however, the digital display can monitor the PRESSURE/PULSE channel regardless of the PULSE DISPLAY OFF pushbutton setting. PULSE permits the display from a pulse sensor to appear on the screen. The 0-125, 25-75, and 0-25 pushbuttons select the mmHg (millimeters of mercury) range for the pressure display. Small pulsatile pressure signals (one-half division of display or less) may not cause a beat tone. Display amplitudes that go off the screen may cause extra beats to be heard (when the ECG channel is off and the pressure/pulse channel is providing the beat information). Select the appropriate pressure range. Also, see PULSE ALARM control information.

(17) 100 mm CHK (Deleted With Option 20). Usable only with standardized pressure transducers containing a calibration resistor. With such a transducer connected to the monitor, this pushbutton displays a 100 mmHg test signal each time it is pressed (since 100 mmHg is overrange on the 0-25 and 25-75 mmHg pressure scales, the 100 mm CHK button can be used only with the 0-125 mmHg scale). There is no display change when a transducer

without a calibration resistor is used. A reading between 95 and 105 mmHg is expected on the digital meter when depressing this button and the ZERO adjustment knob simultaneously. Be careful not to disturb the zero setting while pressing the ZERO adjustment knob.

(18) READOUT PUSH, ZERO. This control permits establishment of a zero-pressure reference, and is adjustable with finger tip or screwdriver. Pressing knob in while rotating provides a fast, accurate indication on the digital display.

(19) PULSE ALARM. Activates alarm if the pulsatile pressure or pulse signal falls below a certain limit. For pressure, this minimum value is 12-15 mmHg and can indicate a broken, plugged, or dislodged catheter. For pulse, the minimum value is about one-half cm of display and it can indicate a loss of peripheral circulation. Alarm is inhibited when switch is in the out position.

(20) BATTERY. The LED (light emitting diode) changes color (green and red) to indicate the approximate state of charge of the battery pack. To interpret the indication, refer to Table 8-1 in the POWER section.

(21) LEAD FAULT INDICATOR. This lamp, when lighted, indicates the following possible problems:

a. An open circuit (break) in the patient cable or in the electrode wires or electrodes.

b. There is poor contact to patient due to insufficient gel or paste on the electrode(s).

c. One or more electrodes or electrode attachment wires disconnected.

d. No button pushed in on the ECG switches.

e. Two or more buttons pushed in on the ECG switches.

f. Excessive dc offset due to dissimilar metals, etc., between the electrodes.

(22) SYST/DIAST (Deleted With Option 20). Display alternates between systolic and diastolic readings expressed in millimeters of mercury (mmHg). Complete readout cycle takes about 3 seconds; the DISPLAY OFF pushbutton can be in or out.

(23) MEAN (Deleted With Option 20). Displays arithmetic mean of pressure signal in mmHg. DISPLAY OFF pushbutton can be in or out.

(24) HEART RATE/MIN. Displays heart rate in beats per minute. Signal source is ECG when ECG is on. When ECG is off, either pressure or pulse provides the rate information.

(25) RESP RATE/MIN. Displays respiration rate in breaths per minute. Signal source is from RESPIRATION channel.

(26) TEMPERATURE. Select either the A or B temperature probe for individual temperature readout displays. Press both A and B pushbuttons together for a difference readout display. Display temperature in [degree] C or [degree] F as selected by the rear-panel switch. Resolution is 0.1 [degrees]. Use only dual-thermistor Yellow Springs Instrument Co. The 701 or 709 probes.

(27) Digital Display. Provides digital display of pressure (mmHg), heart rate (beats per minute), respiration rate (breaths per minute), temperature [degree] C or [degree] F), rate limits setting, or pressure ZERO adjustment knob setting. Polarity is indicated automatically to aid in setting of transducer zero and for reading vacuum. Readout display flashes to indicate overrange, and is blanked if the function selected is invalid.

(28) RESPIRATION SIZE. This control varies the height of the respiration display when the RESPIRATION mode of operation is being used. The RESPIRATION mode can be disabled by rotating the SIZE control fully counterclockwise into the detent (OFF) position.

(29) INSPIRATION Light. Indicator lights when chest expands (with each draw of breath) and can also be seen on the respiration waveform display as the rising portion of each wave.

(30) RESPIRATION DISPLAY OFF. Turns off the RESPIRATION waveform display; however, the digital display will monitor the respiration rate (with RESP pushbutton depressed) regardless of the DISPLAY OFF pushbutton setting.

413 Side Panel (Fig. 2-3)

(31) ECG LEAD CHECK Terminals. The three terminals provide a test signal for checking cable defects, electrode wire defects, circuit operation , and QRS detector function. When the patient wires are connected to the ECG LEAD CHECK terminals, an ECG lead selector button is pushed in, and the ECG SIZE control is centered (on midrange mark), the display should be:

Lead	Display
I	2 centimeters of positive-going signal
II	3 centimeters of positive-going signal.
III	1 centimeter of positive-going signal.

If the LEAD FAULT indicator lights, the cable or electrode wires may be defective.

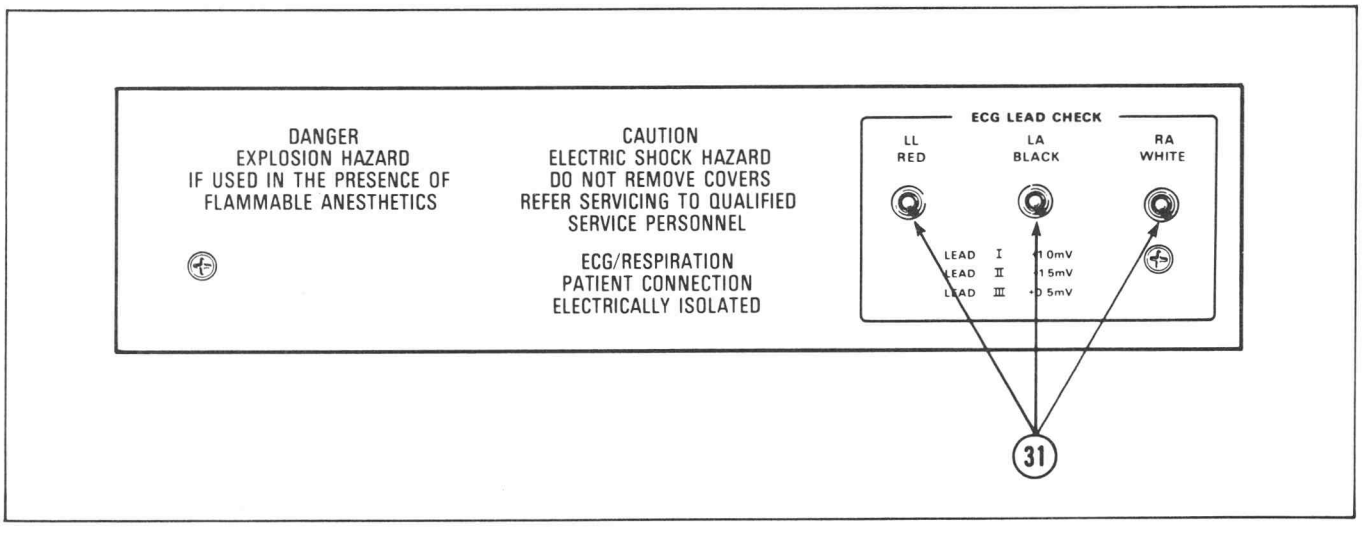

Figure 2-3. Side panel ECG LEAD CHECK terminals.

413 Rear Panel (Fig. 2-4)

(32) ALARM LOUDNESS. Adjusts the loudness of the audio alarm signal. Set fully clockwise if maximum loudness is desired.

(33) TEMPERATURE SENSOR INPUTS. Connect only Yellow Springs Instrument Co. Type 701 or 709 dual-thermistor temperature probes. The two temperature inputs may be utilized individually (INPUT A or B) for separate temperature measurements, or together (both INPUTS A and B) for difference temperature measurements, as selected on the front panel.

(34) [degree] C/ [degree] F. Switch selects temperature scale for the digital display.

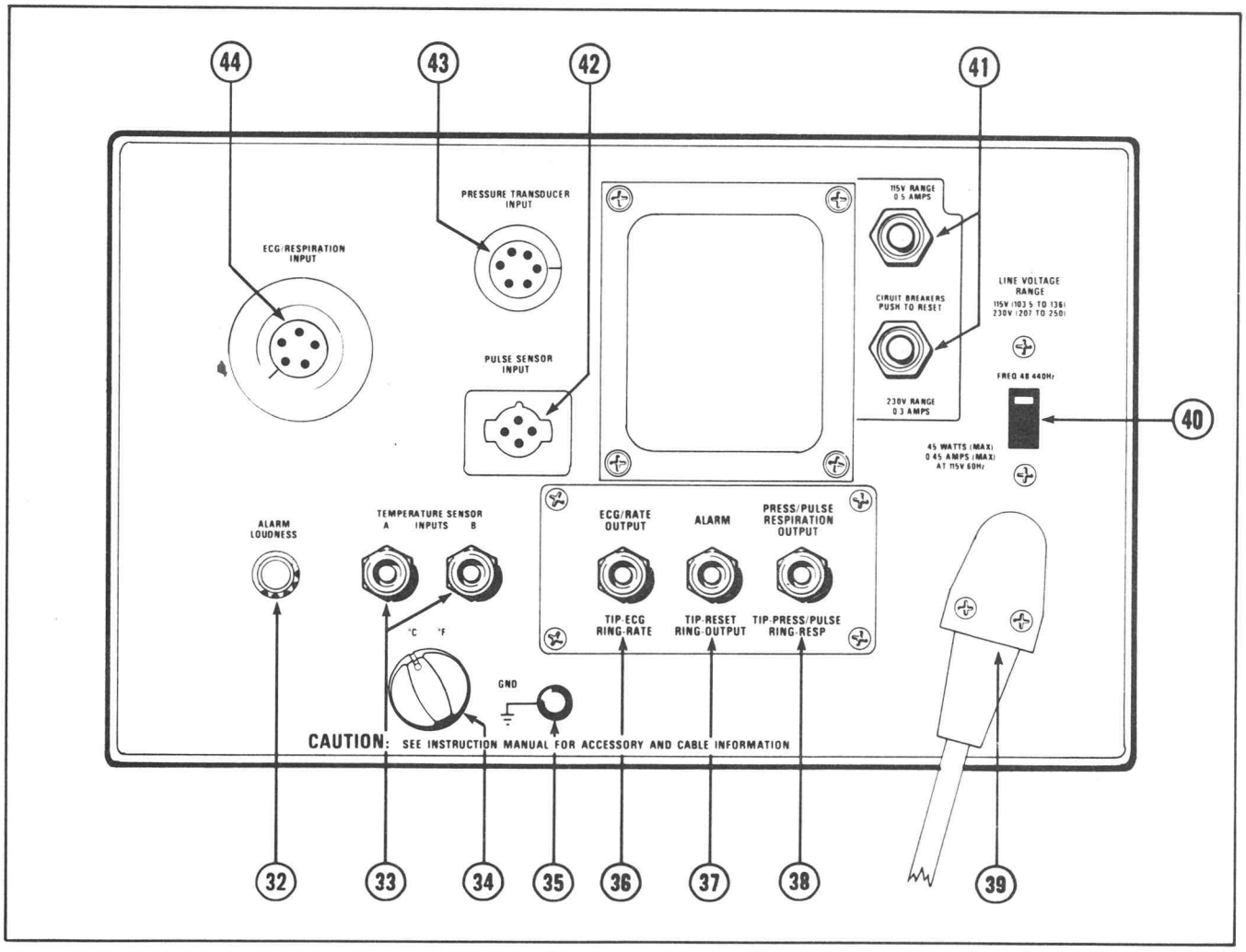

Figure 2-4. Rear panel controls and connectors.

(35) GND. Provides an additional grounding point (there is one in the power cord) for the instrument case. When the power cord is not connected to a power source, the case may be grounded as added protection against any voltage source (that may contact the case) reaching the patient. Grounding through the power cord requires an appropriate three-wire outlet. Do not use a three-terminal to two-terminal adapter. See "Grounding" in the Safety Information section.

(36) ECG/RATE OUTPUT. Provides two output signals through a stereo phone jack. The tip is the ECG signal times 1000 gain. The ring is a heart rate trigger signal. The signal amplitude is +5.5 volts at 12 milliamperes with a duration of approximately 68 milliseconds.

(37) ALARM. Provides for remote indication and resetting of alarms through a stereo phone plug. Shorting the phone plug tip to the barrel (ground) resets the alarm (providing the alarm violation has been corrected). The ring provides a 12 mA signal to indicate an alarm condition.

(38) PRESS/PULSE RESPIRATION OUTPUT. Provides two output signals through a stereo phone plug. The tip provides a pressure/pulse output of 0.5 volt for each centimeter of displayed signal. The ring provides a respiration signal output of 0.5 volt-per-centimeter of displayed signal on the screen.

(39) AC Power Line Cord and Plug. Permits connection to the line for ac operation and battery charging.

(40) LINE VOLTAGE RANGE. This switch is a screwdriver-operated slide switch. It should indicate the proper ac power line voltage. The range selections are 115 and 230 V ac.

(41) CIRCUIT BREAKERS. Line-voltage circuit breakers to protect the instrument under fault conditions. The LINE VOLTAGE RANGE switch automatically selects the appropriate circuit breaker (115 or 230 V ac) when switched. Press the extended button to restore the line voltage.

(42) PULSE SENSOR INPUT. Permits connection of the pulse sensor cable to the instrument.

(43) PRESSURE TRANSDUCER INPUT. Permits connection of the pressure transducer cable to the instrument.

(44) ECG/RESPIRATION INPUT. Permits connection of the torso cable to the instrument.

OPERATING TEMPERATURES

CAUTION

The reliability and operating life of the digital display devices may be significantly and permanently reduced if they are operated below Ø [degree] C (+32[degree] F) for more than a few minutes. When the instrument is operating, infrequent ambient temperature excursions slightly below Ø [degree] C can be tolerated. This is due to inherent self-heating from the instrument and the device itself.

The monitor will operate and meet all specifications over an ambient range of Ø [degree] C to +5Ø [degree] C.

The monitor will function, but not necessarily meet its specifications over the extended range of -15 [degrees] C to +55 [degrees] C. See CAUTION above.

The monitor may be stored over a temperature range of -4Ø [degrees] C to +6Ø [degrees] C.

A cool monitor, taken into a warm, humid environment may cause condensation within the case. This condensation may create discharge paths on the circuit boards. The monitor should be allowed to dry thoroughly before using. The appearance of condensation on the monitor case is a good indication that moisture may have been drawn into the case.

Battery characteristics dictate that charging should be done in a temperature range between Ø [degrees] C and +25 [degrees] C for the battery to accept the maximum charge.

The greater the temperature above +25 [degrees] C the less charge the battery will accept. Longer charging time will not compensate for high temperature. An internal thermal sensing circuit prevents battery charging in ambient temperature above approvimately 31 [degrees] C when monitor is operating and above approximately 48 [degrees] C when monitor is off.

CALIBRATION

INTRODUCTION

IMPORTANT--PLEASE READ BEFORE USING THIS PROCEDURE

ECG LEAKAGE CHECK

ECG patient-circuit leakage must be checked following any repair or adjustment. Also, it is advisable to check leakage any time the monitor has been dropped or otherwise abused. A leakage check procedure is located at the end of the Check/Adjust Procedure.

ADJUSTMENT INTERVAL

Monitor performance should be checked and adjustments made at least every two years. Complete performance should also be checked after any repair, if the monitor has not been readjusted within the past year. Partial or complete readjustment should be performed following specific repairs.

PARTIAL ADJUSTMENT

Partial adjustment is often desirable after replacing components or just to touch up the adjustment of a portion of the monitor between major performance checks.

Many adjustments can be made independently without affecting the adjustment of other portions of the monitor. However, if the +5 volt adjustment is changed, it will be necessary to check the performance of the entire monitor. Refer to Table 3-1 to determine which adjustments should be made when replacing circuit board assemblies and the cathode-ray tube (crt).

TABLE 3-1

Adjustments Needed After Assembly Replacement

1 IF THESE ASSEMBLIES ARE REPLACED / 2 THESE ADJUSTMENTS MUST BE CHECKED OR ADJUSTED	A. POWER SUPPLY & DISPLAY								B. ECG				C. RESPIRATION				D. DIGITAL DISPLAY			E. TEMPERATURE							F. PRESSURE/PULSE				G. RATE		
	+5 V–R1990	FOCUS–R2140	HORIZ POSITION–R1835	HORIZ WIDTH–R1845	CLOCK–R1610	Crt Centering Rings	Trace Alignment–Yoke		INPUT OFFSET NULL–R180	DC LEVEL–R200	GAIN–R195		NULL–R425	BALANCE–R455	GAIN–R450		DVM ZERO–R920	DVM CAL–R910		SPAN–R1435	(A) °F CAL–R1425	(A) °C CAL–R1427	(B) °F CAL–R1485	(B) °C CAL–R1487	ΔT ZERO–R1445		Gage Factor–R456	Trace Zero–R690	Vert Sens–R1685		Heart Rate–R1315	Resp Rate–R1345
MAIN BOARD	●	●	●	●	●				●	●	●		●	●	●		●	●		●	●	●	●	●	●		●	●	●		●	●
ECG BOARD									●	●	●		●	●	●																		
RESPIRATION BOARD													●	●	●																		
PRESSURE/PULSE BOARD																											●	●	●				
CONDITIONER BOARD																				●	●	●	●	●	●						●	●
DVM BOARD																	●	●		●	●	●	●	●	●							
DISPLAY BOARD	FUNCTIONAL CHECK ONLY																																
CATHODE-RAY TUBE (CRT)			●	●	●		●	●																				●	●				
HIGH VOLTAGE BOARD			●	●	●		●	●																				●	●				

TEST EQUIPMENT REQUIRED

The test equipment and accessories listed in Table 3-2 are required for complete adjustment of the 413 Monitor. The specifications given for the test equipment are the minimum necessary for accurate adjustment. All test equipment should be correctly calibrated and operating within the manufacturers specifications.

Special Test Accessories

The special test accessories required for adjustment can be readily constructed using common electronic components. Be sure to use components with at least the accuracy specified.

TABLE 3-2
Test Equipment

Description	Minimum Specifications	Purpose	Examples of Applicable Test Equipment
1. Function generator	Output Amplitude, 1 V square wave; Risetime, 10 μs or faster; Frequency Range, 0.5 Hz to 10 Hz; Frequency Accuracy.[1]	Horiz Width, ECG Gain and Rate Cal adjustments. Pacer Signal Rejection and ECG output checks. Respiration Rate.	Tektronix FG 501 Function Generator.[2]
2. Test oscilloscope	Bandwidth, dc to at least 500 kHz; Minimum Vertical Deflection Factor, 1 mV/div; Sweep Rates, 10 μs/div to 200 ms/division.	ECG Gain and Input Offset Null adjustments, QRS Timing, QRS Width, Rate Alarms, and Isolation checks. Respiration Null & Balance Function generator frequency verification.	Tektronix 212 Oscilloscope.
3. Time-mark generator	Marker Outputs, 1 second; Marker Accuracy, within 0.1%.	Function generator frequency verification.	Tektronix TG 501 Time-Mark Generator.[2]
4. Digital voltmeter (test DVM)	Accuracy, within 0.1%.	+5 volt, DVM Zero, DVM Cal, and Temp Span adjustments Pressure/Pulse output checks.	Tektronix DM 501 Digital Multi-meter.[2]
5. Manometer	Range, 0 to 250 mmHg; Accuracy, within 1%.	Pressure checks and adjustments.	
6. Pressure transducer	Standardized to 50 μV/V/cmHg.	Pressure checks and adjustments.	
7. Pulse sensor		Pulse checks.	Tektronix Pulse Sensors: 015-0236-01 (finger), 015-0237-01 (radial), 015-0238-01 (lobe).
8. Low-pass filter and attenuator	Fig. 3-1A.	Horiz Width, ECG Gain, and Rate Cal adjustments. ECG output checks.	
9. ECG shorting connector	Fig. 3-1B.	Input Offset Null and DC Level adjustments.	

[1] The frequency accuracy of the function generator used for the Rate Cal adjustment should be within 1% or better. If a function generator is not available with this accuracy, use a time-mark generator timing standard and a test oscilloscope, as follows, to set the 1 Hz, 2 Hz, 3 and 4 Hz frequencies needed.

a. Connect function generator output to test oscilloscope vertical input.
b. Set desired frequency on function generator frequency dial.
c. Externally trigger test oscilloscope sweep (in NORMAL trigger mode, not automatic) using 1 second time mark from time-mark generator.
d. Readjust function generator frequency dial slightly on either side of the 1, 2, 3, or 4 Hz dial setting until rising or falling edge of square wave appears at same point with each succeeding sweep.

[2] Requires TM500 Power Module.

TABLE 3-2 (CONT.)
Test Equipment

Description	Minimum Specifications	Purpose	Examples of Applicable Test Equipment
10. Stereo phone plug	Fig. 3-1C.	DC Level and ECG Gain adjustments. Pressure/Pulse output checks. Respiration Checks & Adjustments.	
11. Precision attenuator	Fig. 3-2A.	ECG Gain check.	
12. CMRR-leakage test fixture	Fig. 3-2B.	CMRR and Leakage checks.	
13. Pacer input circuit adapter	Fig. 3-2C.	Pacer Signal Rejection checks.	
14. Temperature sensor substitution plugs	Fig. 3-3.	DVM Cal and °F/°C Cal adjustments.	
15. Respiration test fixture	Fig. 3-4.	Respiration Adjustments.	
16. Leakage test fixture	Fig. 3-5.	Leakage checks.	
17. Patient cable		Respiration adjustments.	Use Tektronix Part No. 012-0739-00 only.

A. LOW-PASS FILTER AND ATTENUATOR

THE VALUES WERE SELECTED TO DETERIORATE PULSE RISETIME, PERMITTING THE QRS DETECTOR AND TRIGGER TO FUNCTION AND TO PROVIDE A SINGLE POSITIVE PULSE DISPLAY FOR EACH SQUARE WAVE.

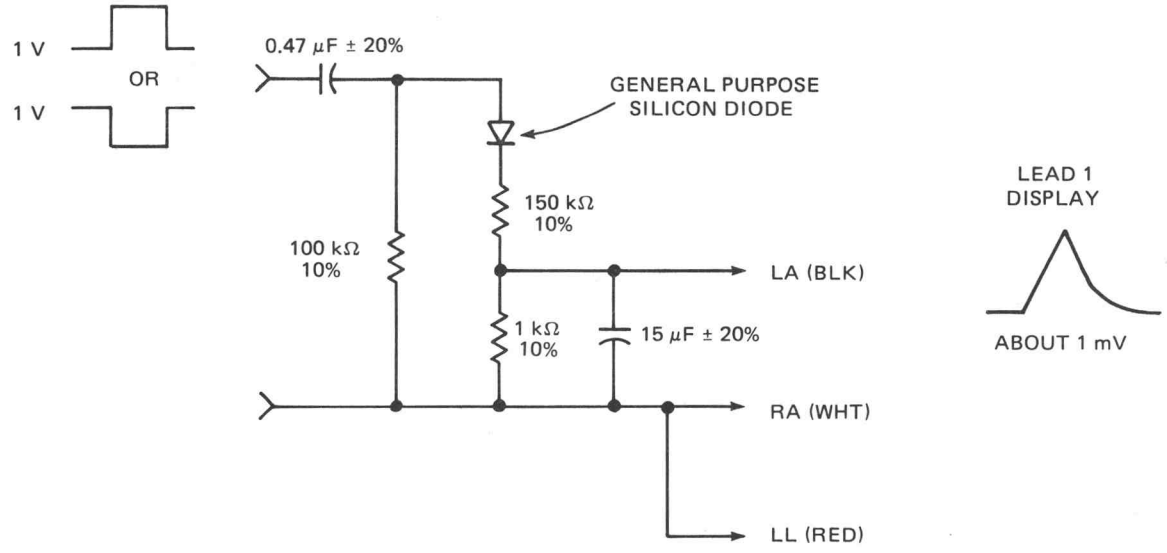

B. ECG SHORTING CONNECTOR

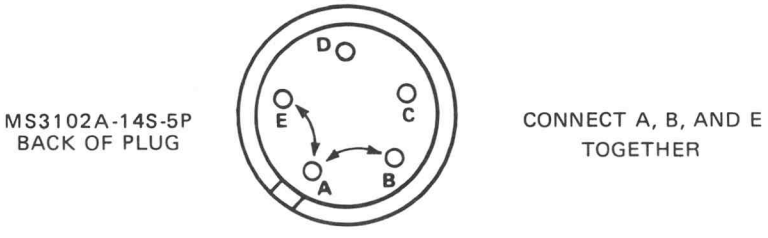

C. STEREO PHONE PLUG

A STEREO PHONE PLUG WITH ITS COVER REMOVED MAKES A CONVENIENT TEST POINT FOR OBTAINING OUTPUT SIGNAL.

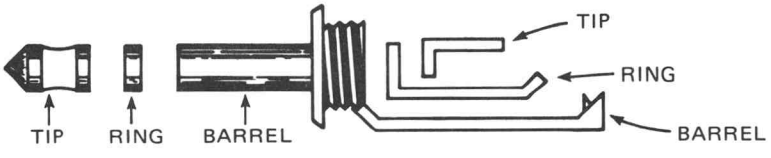

2042-1

Fig. 3-1. Wiring details for the low-pass filter and attenuator, ECG shorting connector, and stereo phone plug test fixtures.

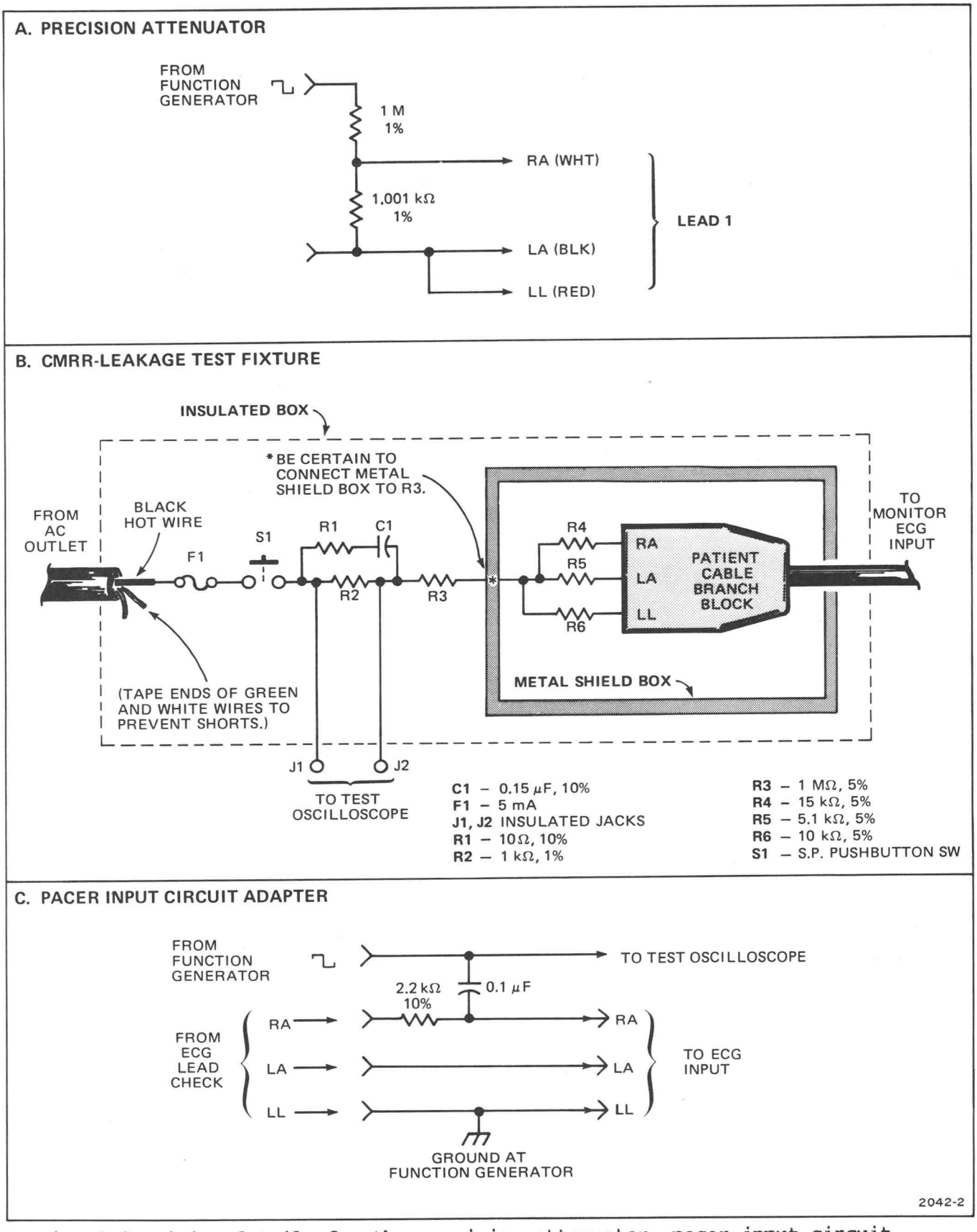

Fig. 3-2. Wiring details for the precision attenuator, pacer input circuit adapter, and CMRR-leakage test fixtures.

SENSOR SUBSTITUTION

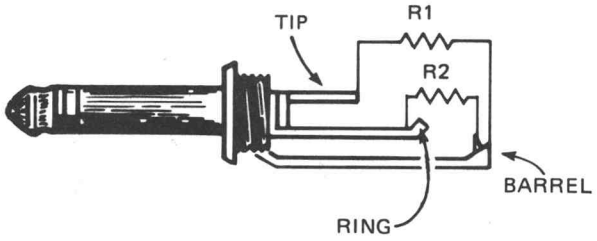

°F	°C	R_1 (Ω)	R_2 (Ω)
41	5	15.24 K	74.44 K
77	25	6000	30.00 K
113	45	2620	13.28 K
98.6	37	3610	18.21 K

NOTES:

1. RESISTORS USED FOR THESE PLUGS SHOULD HAVE VALUES WITHIN 0.1% AND HAVE LOW TEMPERATURE COEFFICIENTS.
2. ANY SERIES OR PARALLEL COMBINATION OF QUALITY RESISTORS CAN BE USED TO PRODUCE VALUES OF R1 AND R2.
3. 98.6°F/37°C IS NOT NEEDED FOR ADJUSTMENT PROCEDURE; IT IS GIVEN FOR REFERENCE ONLY.

2042-3

Fig. 3-3. Temperature sensor substitution plugs.

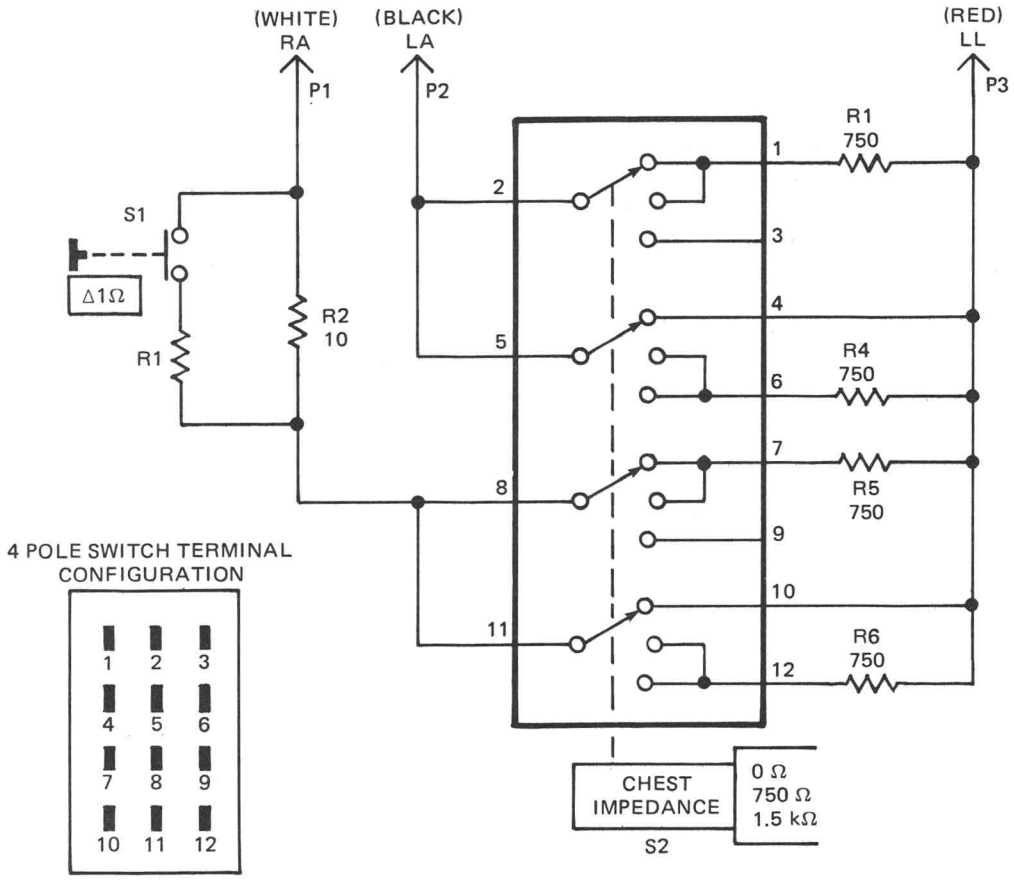

		SUGGESTED TEKTRONIX PART NO.
P1, P2, P3	FEED THRU TERMINAL (FOR ELECTRODE WIRE SNAP CONNECTORS)	(3) 131-1371-00
	BUSHING, INSULATOR (ATTACHING PARTS FOR TERMINALS)	(3) 358-0176-00
R1	RESISTOR MF 10 Ω, 1%, 1/4 W	321-0001-00
R2	RESISTOR 90.9 Ω, 1%, 1/4 W	321-0093-00
R3, R4, R5, R6	RESISTOR MF 750 Ω, 1%, 1/4 W	(4) 321-0181-00
S1	SWITCH, SP, MOMENTARY	260-1285-00
S2	SWITCH, 4 POLE	260-1447-00

2277-14

Fig. 3-4. Respiration test fixture.

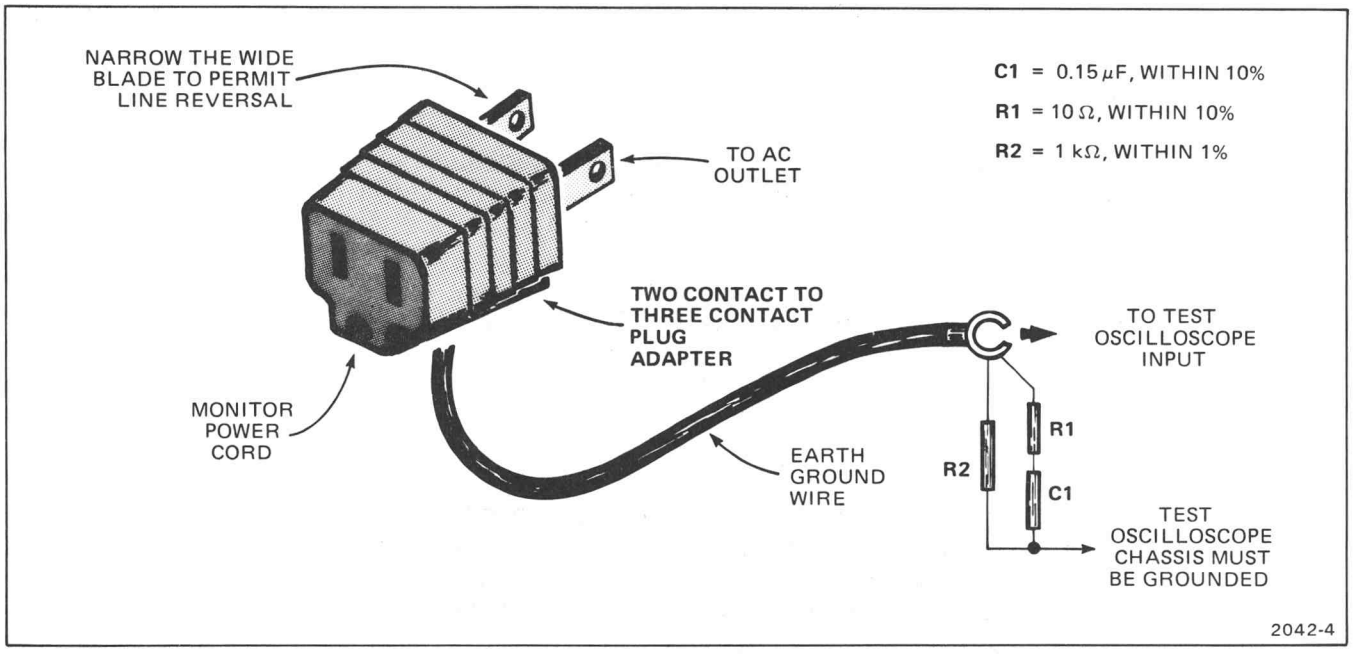

Fig. 3-5. Leakage test fixture.

PRELIMINARY CONSIDERATIONS

Earth's Magnetic Field

Vertical and horizontal trace positioning can be affected slightly by the position of the monitor in relation to the earth's magnetic field. Unless the monitor is kept upright when adjusting the spot centering and horizontal positioning, it may not be possible to match the user's display precisely.

WARNING

> High voltage and high battery current capabilities exist inside the monitor. Voltages of over 15 volts are low-current sources and are not considered dangerous, but could produce an electrical shock. All ac line-voltage connections are covered and located on the rear panel.

Disassembly for Adjustment

Remove the four screws from each side. Pull the bottom cover straight away from the monitor. Lift the left side of top cover to permit the right side to clear the ECG LEAD CHECK terminals.

-CAUTION-

SEMICONDUCTORS SUBJECT TO
STATIC-DISCHARGE DAMAGE
(SPECIAL HANDLING REQUIRED)

MANY SEMICONDUCTORS USED IN THIS INSTRUMENT, ESPECIALLY METAL-OXIDE-SEMICONDUCTOR (MOS) TYPES, CAN BE DAMAGED BY STATIC DISCHARGE, IF NOT HANDLED PROPERLY.

STATIC-DISCHARGE DAMAGE IS USUALLY NOT CATASTROPHIC AND THEREFORE MAY NOT BE IMMEDIATELY APPARENT. IT USUALLY SHOWS UP AS A SUBTLE "WEAKENING" OF SEMICONDUCTOR CHARACTERISTICS.

STATIC-DISCHARGE DAMAGE CAN BE SIGNIFICANTLY REDUCED BY FOLLOWING THE RULES BELOW.

RECOMMENDED HANDLING RULES

Storing and Transporting

Don't *remove semiconductors or boards containing semiconductors from original antistatic container until needed.*

Don't *store or transport semiconductors or boards containing semiconductors in plastic containers, styrofoam or other nonconductive material, unless specifically treated for antistatic qualities.*

Installing

Do *discharge any static charge you may have accumulated before handling semiconductors or boards containing semiconductors.*

Do *use grounded soldering iron and test equipment.*

Do *turn the instrument power off before removing or inserting semiconductors.*

Do *use a static free surface when working on boards or instruments containing semiconductors. (A sheet of card board should be placed over non-antistatic treated plastic work surfaces.)*

Don't *slide semiconductors or boards containing semiconductors across any surface.*

Don't *touch semiconductor leads unless necessary.*

2042-100

CHECK/ADJUST PROCEDURE

For adjustments and test points, see ADJUSTMENT AND TEST POINT LOCATIONS pull out pages

PURPOSE

The purpose of this procedure is to permit the complete calibration of an operating monitor; it is not intended as a trouble-shooting guide. The procedure is divided by major functions to make it easier to adjust individual portions of the monitor.

Some monitor specifications are not verified by this procedure. Additional information can be found in the Specification section or the schematics.

USING THIS PROCEDURE

Verify tolerance given in the CHECK portion of each step before making the adjustment as given in the ADJUST portion. To avoid unnecessary adjustment of other parts, make an adjustment only if the tolerance given in the CHECK is not met.

MAIN BOARD ADJUSTMENTS

To make adjustments on Main board, it is necessary to remove the Conditioner board and add extender cables (from Servicing Extender set, Tek Part 020-0291-00) to 60-pin connector, P1100.

OPERATING TEMPERATURE

The monitor should be adjusted at an ambient temperature of +20[degrees] to +30[degrees] C for best overall accuracy.

PRELIMINARY CHECK

Operation of all modes should be checked and any defects corrected before attempting to adjust the monitor.

PRELIMINARY SETUP

POWER	in (on)
DISPLAY OFF (Resp)	in (off)
DISPLAY OFF (Press/Pulse)	in (off)
OFF (ECG)	in (off)
LOW RATE LIMIT	RATE ALARM OFF (ccw)
SWEEP SPEED mm/SEC 100	in
Alarm RESET	out

Set the remaining controls as desired. Connect the monitor to the correct ac line source. DO NOT PRESET INTERNAL CONTROLS.

A. POWER SUPPLY AND CRT DISPLAY

Equipment Required

1. Digital Voltmeter (test DVM)
2. Function Generator
3. Low-Pass Filter (Fig. 3-1A)

A1. +5 VOLTS

a. Connect Test DVM leads between the ground (ground lug inside of rear panel) and TP1994 (+5 V).

b. CHECK--Supply voltage should be +5 V, within 25 mV.

NOTE

Do not readjust +5 V supply if it is within 25 mV unless a complete recalibration is intended.

c. ADJUST--+5 V R1990 for +5 V at TP1994.

d. Remove Test DVM leads.

A2. TRACE ROTATION

a. CHECK--Trace should be parallel with graticule lines.

WARNING

To avoid electric shock, be careful when making yoke adjustments. There is + and -35 V at the yoke, +175 V in the crt socket and +3400 V on the crt anode.

b. Loosen yoke clamp (Fig. 3-6).

c. ROTATE--Yoke for non-tilted trace. Keep yoke forward as far as possible.

d. Tighten yoke clamp.

NOTE

Due to effects of earth's magnetic field, monitor should be positioned upright when performing steps A4, A5, and A6. Monitor will have to be supported above bench to make adjustments.

A4. SPOT CENTERING AND FOCUS

a. Set POWER button out (off) and disconnect yoke plug, P1690. Set POWER button in (on).

b. CHECK--Spot should be centered on graticule, within 2 mm.

c. ADJUST--Centering Rings for centered spot. Refer to Fig. 3-7.

d. CHECK--Spot should be finely focused.

e. ADJUST--Focus (R2140) for smallest possible round spot.

f. Set POWER button out (off) and reconnect yoke plug. Be sure to match arrow on main board. Set POWER button in (on).

A5. HORIZONTAL POSITION

a. CHECK--Trace should start at left end of graticule lines, within 2 mm.

b. ADJUST--Horiz Position (R1835) so that trace starts at left end of graticule lines.

A6. HORIZONTAL WIDTH

a. Set: ECG 1 in

SWEEP SPEED
mm/SEC 50 in

b. Connect function generator square wave through Low-Pass Filter (Fig. 3-1A) to ECG INPUT connector and display approximately 4 cm at 3 Hz, within 2%. Monitor should produce beat tone and triggered display.

c. CHECK--Fourth pulse leading edge should coincide with 60 BEATS/MIN mark, within 2 mm (Fig. 3-8A).

d. ADJUST--Horiz Width (R1845) to make fourth pulse leading edge coincide with 60 BEATS/MIN mark.

e. CHECK--100 mm/SEC sweep speed (see Fig. 3-8B). Third pulse leading edge should coincide with 45 BEATS/MIN mark, within 3 mm.

f. CHECK--25 mm/SEC sweep speed accuracy (Fig. 3-8C).

g. Change Function Generator frequency to 2 Hz.

h. CHECK--12.5 mm/SEC sweep speed accuracy (Fig. 3-8D).

NOTE

The 12.5 and 25 mm/SEC sweep speeds are not triggered. Therefore it will be necessary to measure the distance between pulses using a centimeter rule.

i. Disconnect Function Generator and Low-Pass Filter.

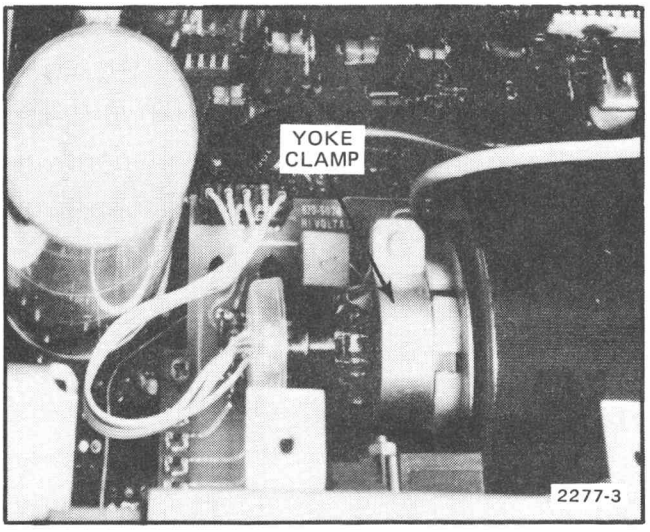

Fig. 3-6. Deflection yoke adjustment.

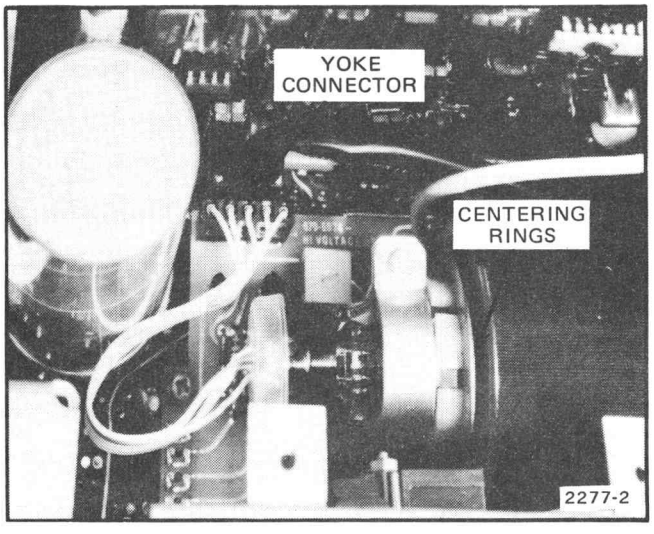

Fig. 3-7. Yoke connector, P1690, and spot centering rings.

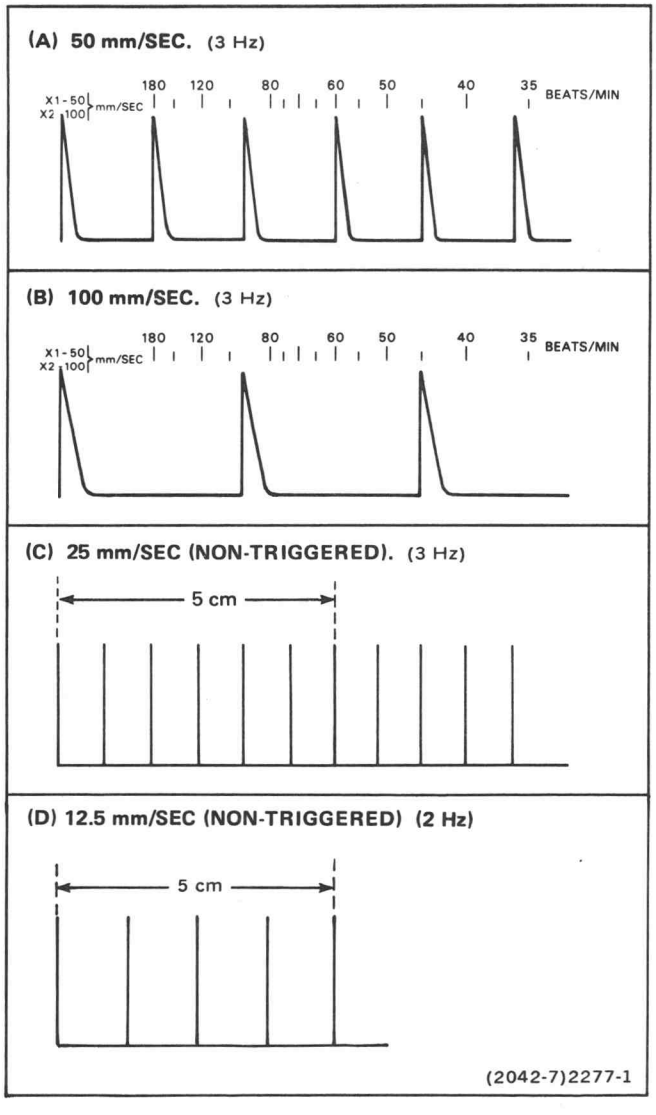

Fig. 3-8. Horizontal Width adjustment.

B. ECG

Equipment Required

1. Patient Cable (Tek Part 012-0739-00)
2. ECG Shorting Connector (Fig. 3-1B)
3. Test Oscilloscope
4. Function Generator
5. Stereo Phone Plug (Fig. 3-1C)
6. CMRR/Leakage Test Fixture (Fig. 3-2B)
7. Precision Attenuator (Fig. 3-2A)

B1. INPUT OFFSET NULL

a. Set:

DISPLAY OFF (Resp)	in (off)
DISPLAY OFF (Press/Pulse)	in (off)
ECG 1	in

b. Connect ECG shorting connector (Fig. 3-1B) to ECG INPUT connector.

c. CHECK--Voltage level at TP183 should be 0.0 V, within 200 mV. Use Test Oscilloscope.

d. ADJUST--Input Offset Null R180 for 0.0 V.

B2. DC LEVEL

a. Insert Stereo Phone Plug (Fig. 3-1C) into ECG/RATE OUTPUT connector.

b. CHECK--ECG OUTPUT (TIP) should be 0.0 V, within 25 mV. Use Test Oscilloscope.

c. ADJUST--DC Level (R200) for 0.0 V.

d. CHECK--Trace is vertically centered at 75 mmHg line, within 3 mm.

e. Remove ECG Shorting Plug.

B3. ECG OUTPUT GAIN

a. Connect Function Generator to test oscilloscope and

through precision attenuator (Fig. 3-2A) to ECG/RATE INPUT connector. Apply 1.0 V, 10 Hz sine wave. Note reference amplitude on test oscilloscope. Then connect test oscilloscope to ECG OUTPUT (TIP).

b. CHECK--ECG OUTPUT (TIP) should be equal to reference amplitude ([divide] 1000 attenuator and X1000 monitor gain = 1).

c. ADJUST--Gain (R195) for output equal to reference amplitude.

d. Disconnect Test Oscilloscope, Function Generator, Stereo Phone Plug, and Precision Attenuator.

B4. ECG LEAD CHECK SIGNAL

a. Connect ECG LEAD CHECK signal to ECG INPUT connector through Patient cable. Leads connect front to back as follows: LL (red) LA (black), RA (white).

b. CHECK--Positive-going pulses should be approxiately 100 bpm (not critical). Rise and fall times are slow to activate QRS detector.

c. Set ECG SIZE to 20 mm/mV.

d. CHECK--Approximate pulse amplitude for each of the three ECG lead configurations is as follows: I, 2 cm; II, 3 cm; III, 1 cm.

B5. LEAD FAULT OPERATION

a. CHECK--LEAD FAULT lamp lights when any ECG lead is removed from an ECG LEAD CHECK terminal.

b. Reconnect lead to ECG LEAD CHECK terminal.

B6. QRS TIMING

a. Connect Test Oscilloscope channel 1 input to TP360 and channel 2 input to TP371. Trigger Oscilloscope on channel 2, (+ slope).

b. CHECK--Interval to first positive-going edge at TP360 is 5 ms, [plus or minus] 1 ms (see Fig. 3-9).

B7. QRS WIDTH

a. Set Test Oscilloscope to channel 1. Trigger oscilloscope on composite or normal, + slope.

b. CHECK--Pulse duration at TP371 is 150 ms, [plus or minus] 25 ms (see Fig. 3-10).

c. Disconnect Test Oscilloscope.

B8. PACER SIGNAL REJECTION

a. Connect Pacer Input Circuit Adapter and Function Generator as shown in Fig. 3-2C.

b. Set Function Generator output for approximately 500 mV, 1 Hz square wave.

c. Set monitor ECG I button in.

d. CHECK--QRS detector (triggers beat tone) should respond only to ECG LEAD CHECK signal and not to simulated pacer signal. When pacer signal coincides with leading edge of ECG LEAD CHECK signal, QRS selection should occur at trailing edge.

e. Disconnect Function Generator and Pacer Input Circuit Adapter.

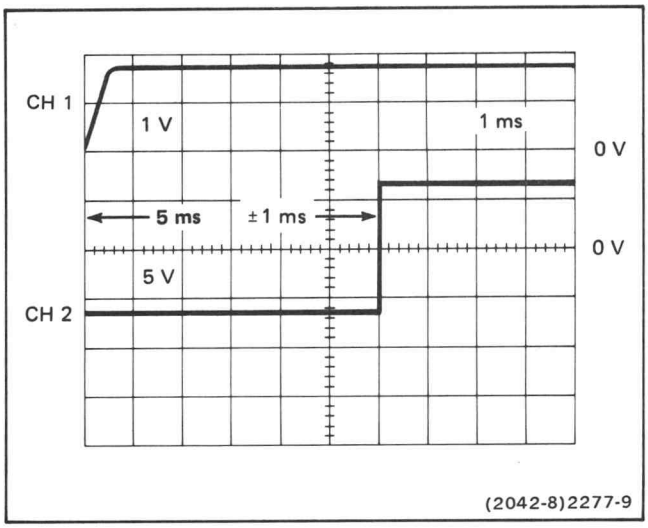

Fig. 3-9. QRS timing.

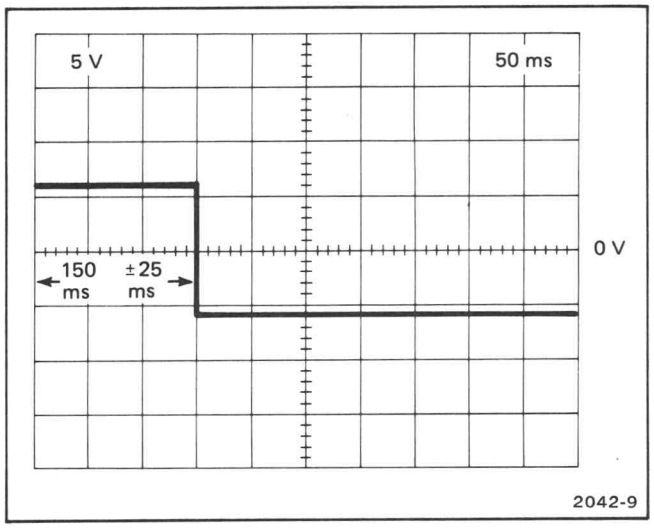

Fig. 3-10. QRS width.

C. RESPIRATION

Equipment Required

1. Patient Cable (Tek Part 012-0739-00)
2. Respiration Test Fixture (Fig. 3-4)
3. Stereo Phone Plug (Fig. 3-1C)
4. Test Oscilloscope

C1. NULL

a. Set:

ECG OFF	in (off)
DISPLAY OFF (Resp)	out (on)
DISPLAY OFF (Press)	in (off)
RESPIRATION SIZE	midpoint (dot on panel)

b. Connect Respiration Test Fixture to ECG/RESPIRATION INPUT via Patient Cable as shown in Fig. 3-4.

c. Set CHEST IMPEDANCE switch on Respiration Test Fixture to 750 [ohm] (center) position.

d. CHECK--Voltage level at TP441 should be 0.0 V within 200 mV. Use Test Oscilloscope.

e. ADJUST--Null (R425) for 0.0 V at TP441.

C2. BALANCE

a. Insert Stereo Phone Plug (Fig. 3-1C) into PRESSURE/PULSE RESPIRATION OUTPUT connector on rear panel.

b. CHECK--RING contact should be 0.0 V, [plus or minus] 25 mV. Use Test Oscilloscope.

c. ADJUST--Balance (455) for 0.0 V on RING contact.

d. CHECK--Trace is vertically centered at 75 mmHg line, [plus or minus] 3 mm.

C3. RESPIRATION GAIN

a. Alternately press and release $\Delta 1\,\Omega$ pushbutton on Respiration Test Fixture at about 1 second intervals.

b. CHECK--Crt beam is deflected 2 cm, [plus or minus] 2 mm each time the $\Delta 1\,\Omega$ pushbutton is pressed or released.

c. ADJUST--Gain (R540) so that crt beam is deflected 2 cm each time $\Delta 1\,\Omega$ pushbutton is pressed or released.

C4. CHEST IMPEDANCE RANGE CHECK

a. Set switch on Respiration Test Fixture to Ø [ohm] position.

b. CHECK--LEAD FAULT light remains off and crt trace gradually moves toward centerline (75 mmHg line).

c. Set switch on Respiration Test Fixture to 1.5 k[ohm] position.

d. CHECK--LEAD FAULT light remains off and crt trace gradually moves toward centerline (75 mmHg line).

D. DIGITAL DISPLAY

Equipment Required

1. Digital Voltmeter (Test DVM)
2. Temperature Sensor Substitution Plug (113°F/45°C) (Fig. 3-3A)
3. Pressure Transducer

D1. DVM ZERO AND DVM CAL

a. Set:

ECG OFF	in (off)
PRESSURE 0-125	in
DISPLAY OFF (Resp)	in (off)
DISPLAY OFF (Press)	in (off)
MEAN	in
°C/°F	°F
POWER	out (off)

b. Connect Pressure Transducer to PRESSURE TRANSDUCER INPUT connector on rear panel.

c. Connect Test DVM between TP1241 (ground #1) and TP1221 (Conditioner Board).

d. Set POWER button in (on).

e. Press in pressure ZERO control and adjust to read between 0.0020 and .0100 V on Test DVM. Do not attempt to set for .0000 V.

f. Release ZERO control and wait for Test DVM reading to stabilize.

g. CHECK--413 digital display reads one number less than Test DVM (rounded off to nearest count). For example, if Test DVM reads .0023, the 413 display should read 1 or if Test DVM reads .0026, the 413 digital display should read 2.

h. ADJUST--DVM Zero (R920) so that digital display reads one number less than Test DVM (rounded off).

i. Set TEMPERATURE A pushbutton in. Display should blank.

j. Insert a 113[degree]F Temperature Sensor

Substitution Plug[1]) (Fig. 3-3) into TEMPERATURE SENSOR INPUT jack on rear panel.

k. CHECK--413 digital display reads same number (rounded off) as Test DVM.

l. ADJUST--DVM Cal (R910) so that 413 digital display reads same number as Test DVM.

NOTE

If DVM Cal setting was not changed, omit steps m and n.

m. Set MEAN button in.

n. INTERACTION--Occurs between DVM Zero and DVM Cal adjustments. Repeat steps g through l as necessary.

o. Remove Pressure Transducer, Temperature Sensor Substitution Plug and Test DVM.

[1]The 113[degree] F Temperature Sensor Substitution Plug is used to produce an arbitrary high number on the digital display, which is just below the over-range point, for use in setting the DVM Cal adjustment. If 0.1% resistors are not available to make the 113°F substitution plug, use the closest 1% values (e.g. 2.61 K for R1 and 13.1 K for R2). Other value combinations can also be used. The important consideration is to produce a reading on the Test DVM between 1.00 V and 1.20 V.

E. TEMPERATURE

Equipment Required

1. Digital Voltmeter (Test DVM)

2. Temperature Sensor Substitution Plugs (Fig. 3-3)

NOTE

To ensure specified temperature readout accuracy, the temperature readout adjustments should be set at a Tektronix Medical Products Service Center. If this is not feasible, use the following method to make these adjustments. The accuracy of these adjustments depends directly on the quality and accuracy of the resistors used in the Temperature Sensor Substitutin Plugs.

E1. TEMP SPAN

a. Set:

TEMPERATURE A	in
°C/ F	°F
POWER	out (off)

b. Connect Test DVM between TP1241 (ground #1) and TP1439 (+1.76 V) on Conditioner Board.

c. Set POWER button in (on).

d. CHECK--Test DVM reads 1.759 V, [plus or minus] 1 count.

e. ADJUST--Span (R1435) so that Test DVM reads 1.759 V.

f. Remove Test DVM.

E2. [degree]F CAL AND [degree]C CAL

a. Insert 77 [degree]F Temperature Sensor Substitution Plug (Fig. 3-3) into TEMPERATURE SENSOR INPUT A jack on rear panel.

b. Using Table 3-3, check or adjust digital display of simulated temperature values for channel A.

c. Set TEMPERATURE B pushbutton in.

d. Using Table 3-3, check or adjust digital display of simulated temperature values for channel B.

E3. ΔT ZERO

a. Insert 77 [degree]F Temperature Sensor Substitution Plug (Fig. 3-3) into TEMPERATURE SENSOR INPUT A jack on rear panel and a 113 [degree]F plug into INPUT B.

b. Record TEMPERATURE A digital readout and TEMPERATURE B digital readout, then calculate A minus B.

c. Set both TEMPERATURE A and B pushbuttons in at the same time.

d. CHECK--Digital display of A minus B is the same as the calculated value, [plus or minus] 1 count.

e. ADJUST-- ΔT Zero (R1445) so that digital display equals calculated A minus B value.

f. Remove Temperature Sensor Substitution Plugs.

TABLE 5-3
°F and °C Readout Checks and Adjustments

°F/°C Switch	Temperature Sensor Substitution Plug (Fig. 3-1D)	414 Digital Display Reading[1]	Check/Adjust
°F	77°F/25°C	77.0 ± 0	CHECK
°F	77°F/25°C	77.0 ± 0	ADJUST °F Cal TEMP A (R1425) TEMP B (R1485)
°C	77 F/25 C	25.0 ± 0	CHECK
°C	77°F/25°C	25.0 ± 0	ADJUST °C Cal TEMP A (R1427) TEMP B (R1487)
°C	41 F/5°C	5.0 ± 0.1	CHECK
°F	41°F/5°C	41.0 ± 0.2	CHECK
°F	113°F/45°C	113.0 ± 0.2	CHECK
°C	113°F/45°C	45.0 ± 0.1	CHECK

[1] If you can not obtain accuracy indicated, it will be necessary to repeat the Span, [degree] F Cal and [degree] C Cal adjustments and slightly compromise the settings.

F. PRESSURE/PULSE

Equipment Required

1. Manometer
2. Pressure Transducer
3. Digital Voltmeter (Test DVM)
4. Stereo Phone Plug (Fig. 3-1A)
5. Pulse Sensor

F1. GAGE FACTOR

a. Set:

PRESS Ø-125	in
DISPLAY OFF (Press)	in (off)
PULSE ALARM	out (off)
MEAN	in

b. Connect Manometer to Pressure Transducer and Pressure Transducer to PRESSURE TRANSDUCER INPUT connector on rear panel.

c. Press in ZERO control and adjust for digital display reading of [plus or minus] Ø.

d. Apply 125 mmHg pressure as indicated by Manometer. Make sure pressure remains at 125 mmHg and is not diminishing slowly.

e. CHECK--Digital display reads 125, [plus or minus] 1 mmHg.

f. ADJUST--Gage Factor (R865) for digital display reading of 125.

g. Release Manometer pressure.

h. CHECK--Digital display reads Ø, [plus or minus] 1 mmHg.

i. INTERACTION--Can occur between Pressure ZERO and Gage Factor adjustments. Repeat steps c through g as necessary to make difference between ZERO and 125 mmHg digital display readings, 125, [plus or minus] 1 mmHg.

j. Press in ZERO control and adjust for digital display reading of [plus or minus] 0.

k. Apply 75 mmHg pressure as indicated by Manometer.

l. CHECK--Digital display reads 75, [plus or minus] 1 mmHg.

m. Apply 25 mmHg pressure as indicated by Manometer.

n. CHECK--Digital display reads 25, [plus or minus] 1 mmHg.

o. Set SYST/DIAST pushbutton in.

p. Apply 125 mmHg pressure as indicated by Manometer.

q. CHECK--Digital display reads 125, [plus or minus] 3 mmHg.

r. Release Manometer pressure.

F2. TRACE ZERO AND VERTICAL SENSITIVITY

a. Set DISPLAY OFF (Press) out (off).

b. Press in ZERO control and adjust for digital display reading of [plus or minus] 0. Release ZERO control.

c. CHECK--Trace should coincide with ZERO graticule line, [plus or minus] 1 mm.

d. ADJUST--Trace ZERO (R690) to make trace coincide with ZERO graticule line.

e. Apply 125 mmHg pressure as indicated by digital display.

f. CHECK--Trace should coincide with 125 mmHg graticule line, [plus or minus] 1 mm.

g. ADJUST--Vertical Sensitivity (R1685 on Main Board) to correct one half the error.

h. INTERACTION--Occurs between Vertical Sensitivity and Trace Zero adjustments. Repeat steps b through g as necessary.

F3. PRESSURE/PULSE OUTPUT

a. Release Manometer pressure.

b. Insert Stereo Phone Plug (Fig. 3-1c) into PRESSURE/PULSE OUTPUT jack and connect Test DVM between TIP and barrel (chassis ground).

c. Press in ZERO control and adjust for digital display reading of [plus or minus] 0. Release ZERO control.

d. CHECK--Test DVM reads 0, [plus or minus] 5 mV.

e. Apply 125 mmHg pressure as indicated by 413 digital display.

f. CHECK--Test DVM reads 1.25 V, [plus or minus] 25 mV.

g. Remove DVM and Stereo Phone Plug.

F4. PRESSURE ALARM

a. Set ALARM LOUDNESS (rear panel) to midrange.

b. Simulate a pulsatile pressure display by pressing and releasing the 100 mm CHECK button approximately once every second. Set PULSE ALARM in (on). Continue to press and release 100 mm CHECK button for more than 30 seconds and check that alarm is not triggered.

c. Stop pressing 100 mm CHECK button.

d. CHECK--Alarm is triggered within about 30 seconds.

e. Set PULSE ALARM button out (off).

f. Disconnect Manometer and Pressure Transducer.

F5. PULSE DISPLAY

a. Set PULSE button in.

b. Connect Pulse Sensor to PULSE SENSOR INPUT on rear panel and monitor your pulse.

c. CHECK--Monitor displays pulse. Digital display is blanked.

F6. PULSE ALARM

a. Set PULSE ALARM button in (on).

b. CHECK--Alarm is not triggered after waiting more than 30 seconds.

c. Disconnect Pulse Sensor.

d. CHECK--Alarm is triggered within 3-15 seconds.

e. Push in ALARM RESET.

f. CHECK--Alarm ends and ALARM light blinks.

g. Set PULSE ALARM and ALARM RESET buttons out.

G. RATE

Equipment Required

1. Function Generator
2. Low-Pass Filter (Fig. 3-1A)
3. Test Oscilloscope
4. 10 M resistor

G1. HEART RATE

a. Set:

ECG I	in
LOW RATE LIMIT	RATE ALARM OFF
HEART RATE/MIN	in
DISPLAY OFF (Press)	in (Off)

b. Connect Function Generator square wave through Low-Pass Filter (Fig. 3-1A) to ECG INPUT connector and display about 4 cm at 3 Hz, [plus or minus] 2% (or 180 bpm, [plus or minus] 3 bpm). See footnote under Test Equipment Required.

c. CHECK--Digital display reads 180, [plus or minus] 3 after 15 seconds.

d. ADJUST--Heart Rate (R1315) so that digital display reads 180.

e. Set Function Generator to 1 Hz.

f. CHECK--Digital display reads 60, [plus or minus] 2 after 15 seconds.

g. Set Function Generator to 4 Hz.

h. CHECK--Digital display reads 240, [plus or minus] 4 after 15 seconds.

i. Turn off Function Generator.

j. CHECK--Digital display reads 0 to 2 after 15 seconds.

k. Turn on Function Generator.

G2. RATE OUTPUT

a. Insert Stereo Phone Plug into ECG/RATE OUTPUT jack on rear panel.

b. Connect Test Oscilloscope to RATE OUTPUT (RING).

c. CHECK--An approximate 68 ms, 5.5 V pulse occurs for each ECG pulse (240 bpm).

d. Disconnect Test Oscilloscope and Stereo Phone Plug.

G3. RESPIRATION RATE

a. Connect a 10 M resistor between TP371 on the ECG board and TP441 on the Respiration board.

b. Set Function Generator frequency so that the digital display reads 75-80 beats/minute for heart rate. Note reading.

c. Set:	DISPLAY OFF (resp)	out (on)
	RESPIRATION SIZE	midpoint (dot on panel)
	RESP RATE/MIN	in

d. CHECK--INSPIRATION light goes on with each positive-going excursion of the displayed pulse.

e. CHECK--Digital display reads the same as the heart rate, [plus or minus] 2 beats/minute. It can take up to one minute after signal is applied and the respiration channel is turned on for the digital display to produce an accurate reading.

f. ADJUST--Respiration Rate (R1345, Main board) so that digital display of respiration rate is the same as heart rate. Note that response to control is very slow.

g. Disconnect 10 M resistor.

G4. RATE ALARM LIMITS

a. Set Function Generator frequency to read 120, [plus or minus] 1 (2 Hz) on digital display.

b. Set:	ALARM LOUDNESS (rear panel)	Midrange
	LOW RATE LIMIT (press for digital display)	116
	HIGH RATE LIMIT (press for digital display)	124
	ALARM RESET	in

c. Press LOW RATE LIMIT control in and set to read 124 on digital display.

d. Set ALARM RESET button out.

e. CHECK--Alarm tone sounds and ALARM light turns on within 30 seconds.

f. Press in RESET button.

g. Set LOW RATE LIMIT to read 116 on digital display.

h. Press HIGH RATE LIMIT control in and set to read 116 on digital display.

i. Set ALARM RESET button out.

j. CHECK--Alarm tone sounds and alarm light turns on within 30 seconds.

k. Set LOW RATE LIMIT control to RATE ALARM OFF.

l. Set HIGH RATE LIMIT control to 90 (printed on front panel). Press control in and check that digital display reads 90, [plus or minus] 15. Repeat at 120, 150, 180, 210, and 240. Check that front panel settings and digital display are within 15 bpm of each other. Loosen set screw and readjust knob on shaft to make front panel settings and digital display within 15 bpm of each other.

m. Set HIGH RATE LIMIT fully clockwise and reset alarm if necessary.

n. Set LOW RATE LIMIT Control to 30 (printed on front panel). Press control in and check that digital display reads 30, [plus or minus] 15. Repeat at 60, 90, 120, and 150. Check that front panel settings and digital display are within 15 bpm of each other.

o. Disconnect Function Generator and Low-Pass Filter.

H. ECG LEAKAGE AND COMMON MODE REJECTION RATIO (CMRR)

H1. ECG LEAKAGE CHECK

This check is to determine the amount of leakage current which could be present between the patient and the ECG circuit of the monitor under either of the following abnormal conditions: (1) monitor is properly grounded and patient is at 120 V ac, 60 Hz, or (2) monitor is not grounded, case is connected to 120 V ac, 60 Hz and patient is grounded.

The leakage test procedures, given below, involve measuring the ECG-patient leakage current as a p-p voltage drop across a 1 K [ohm] resistor, paralleled by a frequency compensating network. Leakage current, expressed in rms, is then calculated from the measured p-p voltage and the known resistance value as follows:

$$\frac{E\ (p\text{-}p) \times 0.35}{1\ K[ohm]}$$

The recommended method for checking this leakage current is to measure directly in the ECG input using an instrument (such as a Tektronix 200-series oscilloscope) that can tolerate the full line voltage at its input circuit without distorting the measurement.

The alternative method provides equally satisfactory results when such an instrument is not available. Using this method, the measurement is made in the ground return (safety earth) conductor of the monitor power cord.

a. Disconnect monitor from ac power source.

b. Remove top and bottom covers.

c. CHECK--All plug-in circuit boards are pushed firmly into their mating receptacles and seated in their slots on board top retainer clip.

d. CHECK--All cables are plugged firmly into their mating pins and that they are dressed away from ECG shield, input connector shield and pushbutton switch shafts.

e. CHECK--Screw and spacer securing ECG circuit board are tight. See Fig. 3-11.

f. Replace top and bottom covers. Leakage check is valid only with covers installed.

Recommended Method

g. Set up monitor and test fixtures as shown in Fig. 3-12.

h. CHECK--60 Hz amplitude on oscilloscope should be 14.4 mV, p-p (5 [micro]A, rms) or less.

Alternative Method

i. Set up monitor and test fixtures as shown in Fig. 3-13.

NOTE

Test oscilloscope chassis must be grounded.

j. CHECK--Total 60 Hz amplitude on test oscilloscope should be 84.4 mV, p-p (30 [micro]A, rms) or less, disregarding monitor converter hash. Record the reading. Remove CMRR/leakage fixture from the ac outlet.

k. CHECK--Primary 60 Hz amplitude on test oscilloscope should be 70 mV, p-p (25 [micro]A, rms) or less, disregarding converter hash.

l. CALCULATE--Total 60 Hz amplitude minus primary 60 Hz amplitude = ECG leakage which should be 14.4 mV, p-p (5 [micro]A, rms) or less.

m. Reverse the leakage test fixture in the ac outlet and repeat the above checks.

H2. ECG CMRR CHECK

a. Connect CMRR/leakage test fixture (Fig. 3-2B) to ECG INPUT connector. Then connect test circuit to ac-power line.

b. Set ECG SIZE control to 20 mm/mV.

c. Set ECG buttons to the position displaying greatest amplitude.

d. CHECK--Monitor display amplitude should be less than 1.3 cm p-p for nominal 120 V lines (or less than 2.6 cm, p-p for nominal 240 V lines, if the lines are unbalanced).

e. Disconnect CMRR/leakage test fixture.

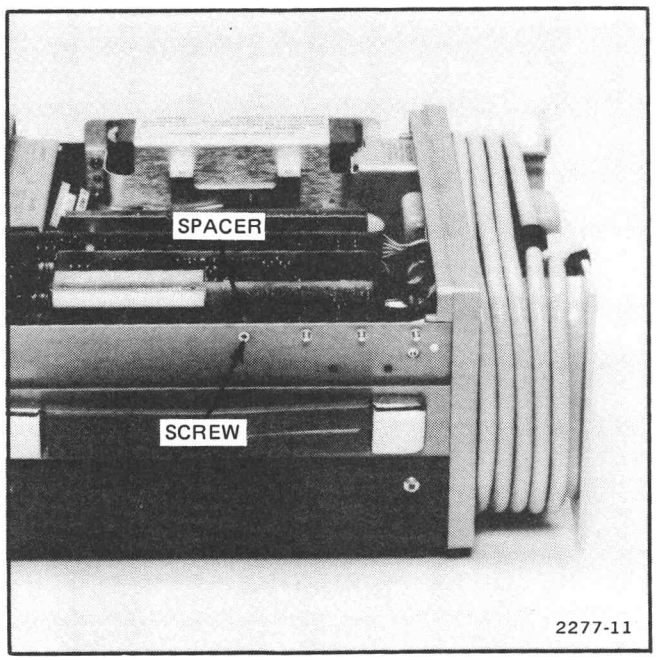

Fig. 3-11. ECG board securing.

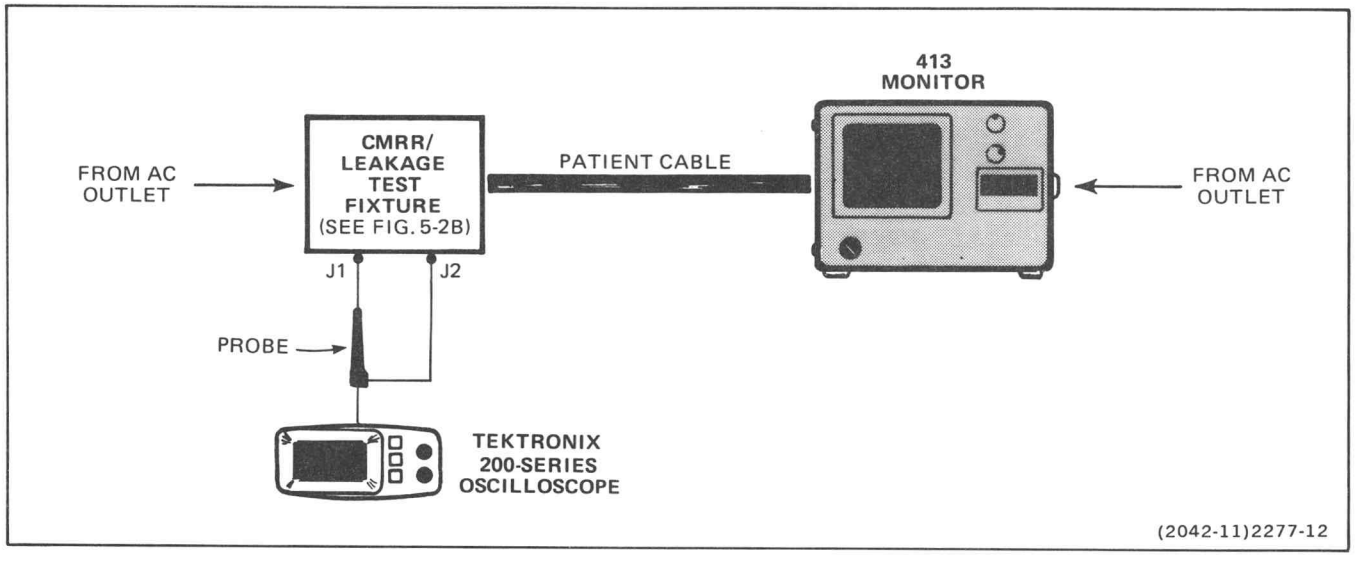

Fig. 3-12. Recommended test setup for checking leakage current.

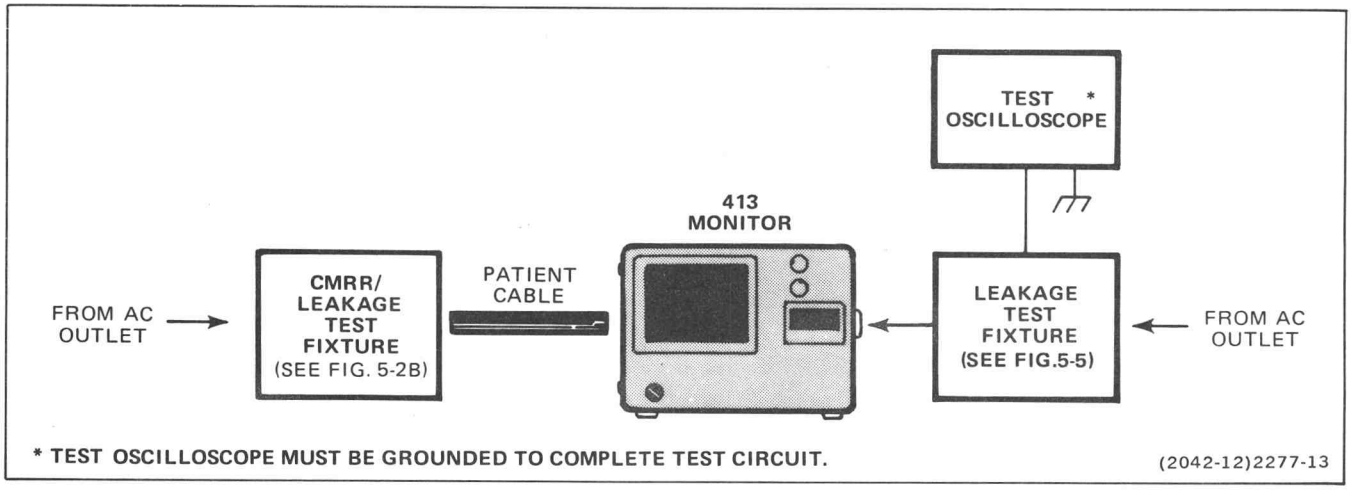

Fig. 3-13. Alternative method to check leakage current.

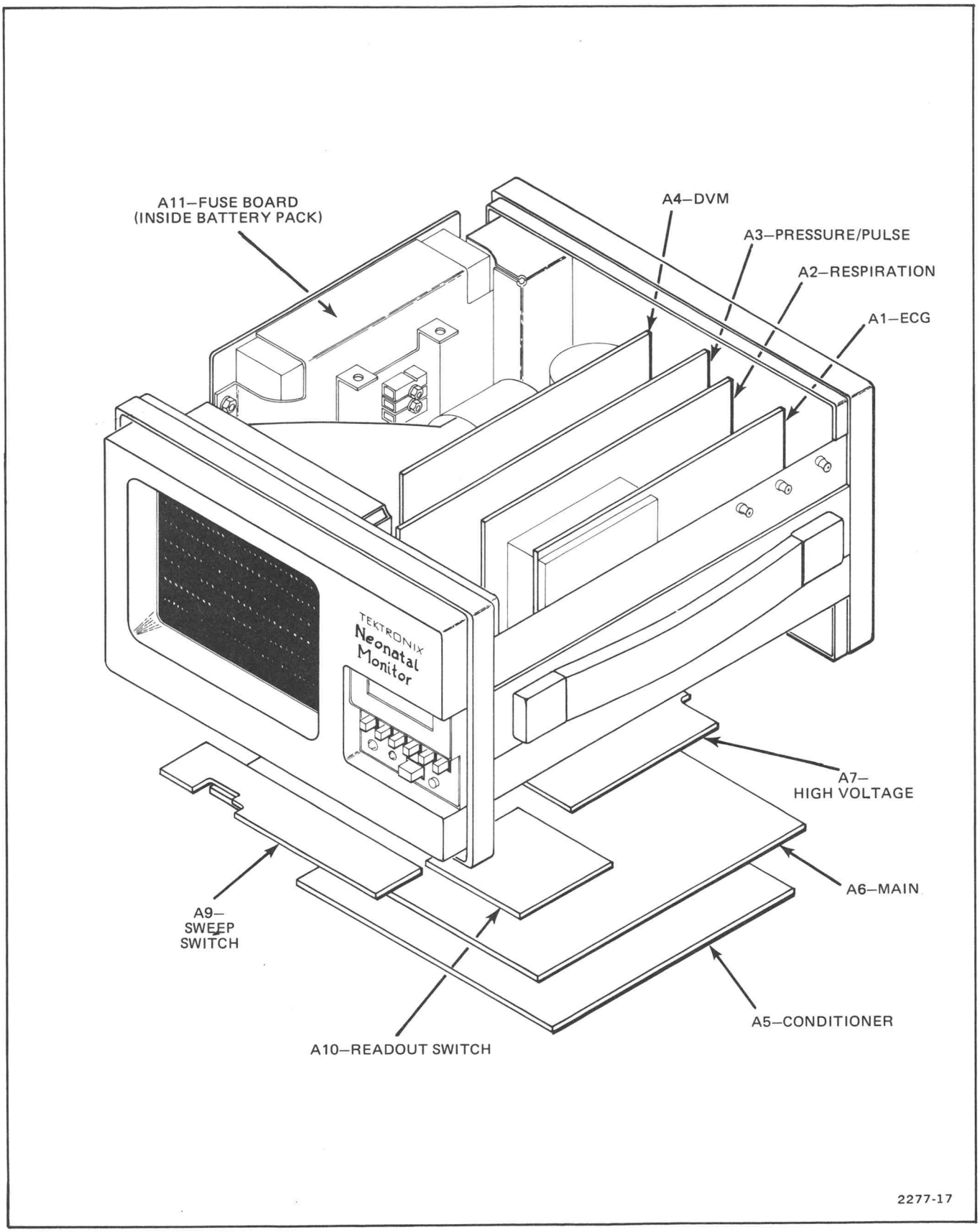

Circuit board locations.

ECG BOARD
J100 PIN ASSIGNMENTS

PIN	DESCRIPTION	TO/FROM
1	GROUND #2	
2	-12 V	
3	-7 V	
4	+7 V	
5	+12 V	
6	NC	
7	NC	
8	NC	
9	NC	
10	NC	
11	NC	
12	NC	
13	NC	
13	NC	
14	NC	
15	NC	
16	Lead Fault	CR1627
17	ECG Off	J600-20, U1702F-14, J400-24
18	ECG SIZE R210 (CCW)	P210-1
19	ECG SIZE R210 (slider)	P210-2
20	ECG SIZE R210 (CW)	P210-3
21	QRS Disable	Not used
22	Press/Pulse & Resp Display Off	R222, U1702A, J600-19
23	ECG Trig	J400-22 Not used in standard 413
24	Spare	
25	Spare	
26	Spare	
27	+5 V	
28	ECG Wave (0.25 V/Cm)	U1632B-4
29	-ECG Wave	P1100-49, P2400-24, U215C-8
30	ECG Wave (X1000)	P1597-1

Board-Pin Assignments--413 Service

RESPIRATION BOARD
J400 PIN ASSIGNMENTS

PIN	DESCRIPTION	TO/FROM
1	Ground #2	
2	-12 V	
3	-7 V	
4	+7 V	
5	+12 V	
6	NC	
7	NC	
8	NC	
9	NC	
10	NC	
12	NC	
13	NC	
14	NC	
15	NC	
16	LEAD FAULT	CR1726
17	Resp Display Off	J600-21
18	Resp SIZE R470 (CCW)	P470-3
19	Resp SIZE R470 (slider)	P470-4
20	Resp SIZE R470 (CW)	P470-5
21	Resp Off	J1100-32
22	ECG Trig	J100-23 Not used in Standard 413
23	Resp Trig	J1100-50, CR1729
24	ECG Off	J100-17, J600-20, U1702F-14
25	Pulse/$\overline{\text{Pressure}}$	J1100-53, J600-18, U711C-6
26	Press/Pulse Display Off	J600-23
27	+5 V	
28	Resp Wave (0.25 V/Cm)	J600-30
29	Resp Wave (0.5 V/Cm)	j1100-21, P1597-6, U439A-1
30	Resp Wave (1 V/ohm)	Not used

Board-Pin Assignments--413 Service

PRESSURE/PULSE BOARD
J600 PIN ASSIGNMENTS

Pin	Description	To/From
1	Ground #2	
2	-12 V	
3	-7 V	
4	+7 V	
5	+12 V	
6	PULSE SIZE R635 (CCW)	P635-3
7	PULSE SIZE (R635 (slider)	P635-2
8	PULSE SIZE R635 (CW)	P635-1
9	Pressure ZERO R765 (CCW)	P1171-5
10	Pressure ZERO R765 (slider)	P1171-4
11	Pressure ZERO R765 (CW)	P1171-3
12	Press/Pulse Trigger	J1100-51, U1632C-11
13	Chop Blank	U1627C-8
14	Chop Clock (2 kHz)	U1623B-13
15	+7 V	J1100-52, P2400-4
16	$\overline{\text{Transducer}}$	J1100-22, U739B-4, P2400-21
17	$\overline{\text{Transducer}}$	J1100-23, CR1163
18	Pulse/$\overline{\text{Pressure}}$	J1100-53, J400-25, U711C-6
19	Press/Pulse & Resp Display Off	J100-22, U1702A, R222
20	ECG Off	J100-17, J400-24, U1702F-14
21	Resp Display Off	J400-17
22	Press/Pulse/Resp Wave	U1632A-1
23	Press/Pulse Display Off	J400-26
24	NC	
25	Press Wave Scaled	J1100-54, P635-5, U872C-8, P2400-3
26	Pulse Wave	J1100-25
27	Press Wave	J1100-55, U872D-14
28	Press Wave Scaled	J1100-26, R1202
29	Press Wave	J1100-56, S605B
30	Resp Wave (0.25 V/Cm)	J400-28

Board-Pin Assignments--413 Service

DVM BOARD
J900 PIN ASSIGNMENTS

PIN	Description	To/From
1	Ground #1	
2	-12 V	
3	-7 V	
4	+7 V	
5	+12 V	
6	26 V p-p Approx 30 kHz	T1010
7	26 V p-p Approx 30 kHz	T1010
8	Spare	
9	Spare	
10	Sample (DVM)	Q1043, U1177B-11,
11	- sign	P977-10, Q1061
12	+ sign	P977-9, Q1062
13	1 (half digit)	P977-8, Q982
14	g	P977-7, U975-14
15	f	P977-6, U975-15
16	e	P977-5, U975-9
17	d	P977-4, U975-10
18	c	P977-3, U975-11
19	b	P977-2, U975-12
20	a	P977-1, U975-13
21	$\overline{\text{Sign Enable}}$	J1100-57, U1133C-10
22	$\overline{\text{Update}}$ (DVM)	J1100-28
23	$\overline{\text{Blanking}}$	J1100-58, U1180-3
24	$\overline{\text{DP4}}$	
25	$\overline{\text{DP3}}$	
26	$\overline{\text{DP2}}$	
27	Ground # 1	
28	DVM In	J1100-59, U1223d-10
29	DVM Com	Gnd #1, J1100-60
30	+2.5 V Reference	
31	NC	
32	NC	
33	NC	
34	NC	
35	NC	
36	NC	
37	NC	
38	NC	
39	NC	
40	NC	
41	KA1	P956-5
42	KA3	P956-6

Board-Pin Assignments--413 Service

43	DEC2	P956-7
44	DEC 3	P956-9
45	DEC4	P956-8
46	A1	P956-1
47	A2	P956-2
48	A3	P956-3
49	A4	P956-4
50	Spare	

Board-Pin Assignments--413 Service

CONDITIONER BOARD
J1100 PIN ASSIGNMENTS

PIN	DESCRIPTION	TO/FROM
1	ALARM Light	P1598-2
2	PULSE ALARM on/off Sw.	S1532
3	LOW RATE LIMIT READOUT PUSH Sw.	P1133-7
4	RATE ALARM OFF Sw.	P1133-4
5	LOW RATE LIMIT R1515 (CW)	P1133-3
6	LOW RATE LIMIT R1515 (slider)	P1133-2
7	READOUT PUSH Sw. (High Rate Limit)	P1134-4
8	HIGH RATE LIMIT R1505 (slider)	P1134-2
9	ALARM RESET	P1159-5, S1559
10	READOUT PUSH Sw. (Pressure ZERO)	P1171-1, S765
11	RATE ALARM SOURCE Sw.	P1134-3, P1520-1, P1510, S1510
12	RATE ALARM SOURCE Sw.	P1520-3, P1510-3, S1510
13	RATE ALARM SOURCE Sw.	P1520-5, P1521-5, S1510
14	APNEA DELAY Sw.	P1564-2, P1554-2, S1554
15	APNEA ALARM Sw.	P1564-4, P1554-4, S1554
16	Selected Trig	U1706B-5
17	Alarm Ext Out	
18	Spare	
19	Spare	
20	Skip Resp	J400-21, P2400-32
21	Resp Wave (0.5 V/CM)	J400-29, U439A-1, P1597-6
22	$\overline{\text{Transducer}}$ (Skip A/V)	U739B-4, P2400-21
23	$\overline{\text{Transducer}}$ (Selected Press Skip)	CR1163
24	NC (A Wave Scaled)	J600-24, P2400-20, P635-6
25	Pulse Wave	J600-26
26	Press Wave Scaled	J600-28, R1202
27	$\overline{\text{Sample}}$ (DVM)	J900-10, U1177B-11, Q1043
28	$\overline{\text{Update}}$ (DVM)	J900-22
29	$\overline{\text{DP2}}$	
30	+2.5 V Reference	
31	Ground #2	
32	-12 V	
33	-7 V	
34	+7 V	
35	+12 V	

36	LOW RATE LIMIT R1515 (CCW)	P1133-1
37	Spare	
38	HIGH RATE LIMIT R1505 (CCW)	P1134-1
39	Press Wave Scaled	U1175-4
40	READOUT PUSH Sw. (Press ZERO)	P1171-2
41	RATE ALARM SOURCE Sw.	P1520-2, P1510-2, S1510
42	RATE ALARM SOURCE Sw.	P1520-4, P1510-4, S1510
43	APNEA DELAY Sw.	P1564-1, P1554-1, S1554
44	APNEA DELAY Sw.	P1564-3, P1554-3, S1554
45	AUDIO (Alarm)	P1731-3, R1731
46	Low Batt/Monitor On	U2033-6
47	Alarm Ext Reset	
48	Ground #1	
49	-ECG Wave	J100-29, U215C-8, P2400-24
50	Resp Trig	J400-23, CR1729
51	Press/Pulse Trig	J600-12, U1632C-11
52	Transducer (Skip A)	J600-15, P2400-4
53	Pulse/Pressure	J600--18, U1711C-6, J400-25
54	A/V Wave Scaled	J600-25, U872C-8, P635-5, P2400-3
55	Pressure Wave (A/V)	J600-27, U872D-14
56	Press/Pulse Wave	J600-29, S605B
57	Sign Enable	U1133C-10, J900-21
58	Blanking	U1180-3, J900-23
59	DVM In	U1223D-10, J900-28
60	DVM Com	Gnd. #1, J900-29

Board-Pin Assignments--413 Service

RECORDER INTERFACE CONNECTOR (34-Pin)
P2400 PIN ASSIGNMENTS

PIN	DESCRIPTION	TO/FROM
1	Alarm Ext Out (15 mA)	J1100-17
2	Alarm Reset	J1100
3	A/V Wave Scaled	J1100-54, J600-25, U872C-8, P635-5
4	Skip A	J1100-52, J600-15
5	Skip Temp A	U1406D-14
6	Rate Overrange	U1326B-5
7	[degree] F/[degree] C	R1427 [degree] C Cal
8	A/V Wave (Pulse)	J1100-55 or 56 via P1120
9	Temp A (DVM)	U1406B-7
10	Diast (DVM)	U1236A-1
11	RATE (DVM)	U1335B-7
12	DVM Com	Ground #1, J1100-48
13	Low Batt/Monitor On	J1100-46, U2033-6
14	Temp B Overrange	U1457C-10
15	Skip Temp B	U1466A-1
16	Temp B (DVM)	U1466C-8
17	+7 V	
18	A Wave Scaled	
19	Resp Wave (0.5 V/Cm)	J400-29, U439A-1, J1100-21
20	A Wave	J1100-24, J600-24, NC in Standard 413
21	Skip A/V	P1100-22, U739B-4
2	A/V Overrange	CR1122, CR1124
23	Temp A Overrange	U1457D-11
24	-ECG Wave	J100-29, U215C-8, J1100-49
25	Wave Common	Ground #2, J1100-31
26	Syst (DVM)	U1236D-14
27	Mean (DVM)	U1206A-1
28	PRESS/PULSE TRIG	J1100-51, J600-12
29	Press/Pulse	U1451B-4
30	Alarm	U1151D-11
31	Resp Overrange	U1326A-13
32	Skip Resp	J400-21, P470-7
33	RESP (DVM)	U133SA-1
34	Resp Trig	P1100-50, CR1729

OPTIONS

OPTION 5

Description

This option changes the ECG/RATE OUTPUT signal. The RING output changes to a voltage linearly related to heart rate on a beat-to-beat basis. This signal can be connected to an external chart recorder to plot instantaneous heart rate against time (beat-to-beat variability). Zero rate is indicated by zero volts, and 250 bpm by +2.5 volts. All intermediate rates produce a proportional output at the rate of 10 millivolts/beat.

Calibration

Replace step G2-RATE OUTPUT in the standard 413 Check/Adjust procedure with the following:

a. Insert Stereo Phone Plug into ECG/RATE OUTPUT jack on rear panel and connect Test DVM to RATE OUTPUT (RING contact).

b. Set ECG OFF pushbutton in (off).

c. CHECK-Test DVM reads 0.00 V, plus or minus 0.5 mV.

d. ADJUST-Zero (R2275) so that Test DVM reads 0.00 V, plus or minus 0.5 mV.

e. Set ECG I pushbutton in.

f. CHECK-Test DVM reads 2.50 V, plus or minus 30 mV.

g. ADJUST-Gain (R2285) so that Test DVM reads 2.40 V This represents 10 mV/beat.

h. Disconnect Test DVM and Stereo Phone Plug.

OPTION 20

This option deletes the blood pressure function on the monitor. The option removes all controls, connectors, and graticule calibrations associated with the blood pressure mode of operation.

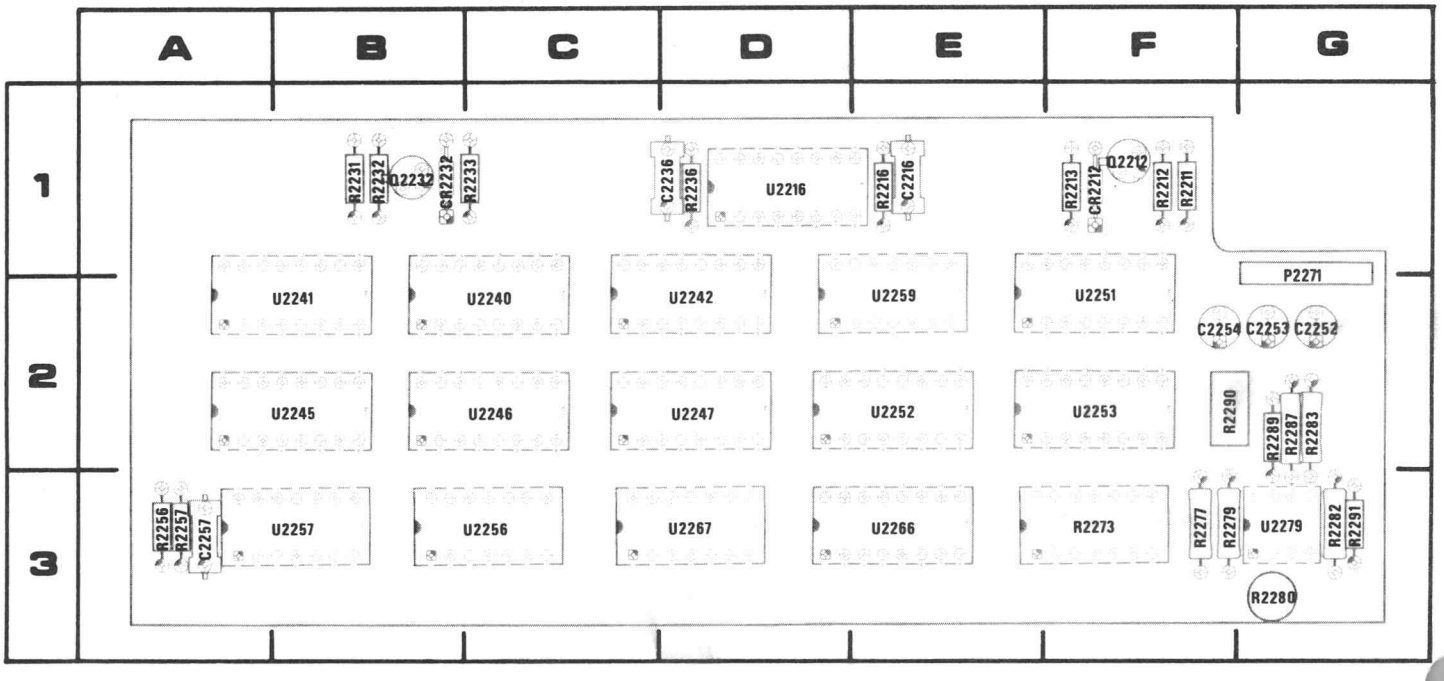

A12—Beat-to-Beat Rate Converter Board components.

CKT NO	GRID COORD	CKT NO	GRID COORD	CKT NO	GRID COORD	CKT NO	GRID COORD
C2216	1E	R2211	1F	R2280	3G	U2246	2C
C2236	1D	R2212	1F	R2282	3G	U2247	2D
C2252	2G	R2213	1F	R2283	2G	U2251	2F
C2253	2G	R2216	1E	R2287	2G	U2252	2E
C2254	2F	R2231	1B	R2289	2G	U2253	2F
C2257	3A	R2232	1B	R2290	2F	U2256	3C
		R2233	1C	R2291	3G	U2257	3B
CR2212	1F	R2236	1D			U2259	2E
CR2232	1B	R2256	3A	U2216	1D	U2266	3E
		R2257	3A	U2240	2C	U2267	3D
P2271	1G	R2273	3F	U2241	2B	U2279	3G
		R2277	3F	U2242	2D		
Q2212	1F	R2279	3F	U2245	2B		
Q2232	1B						

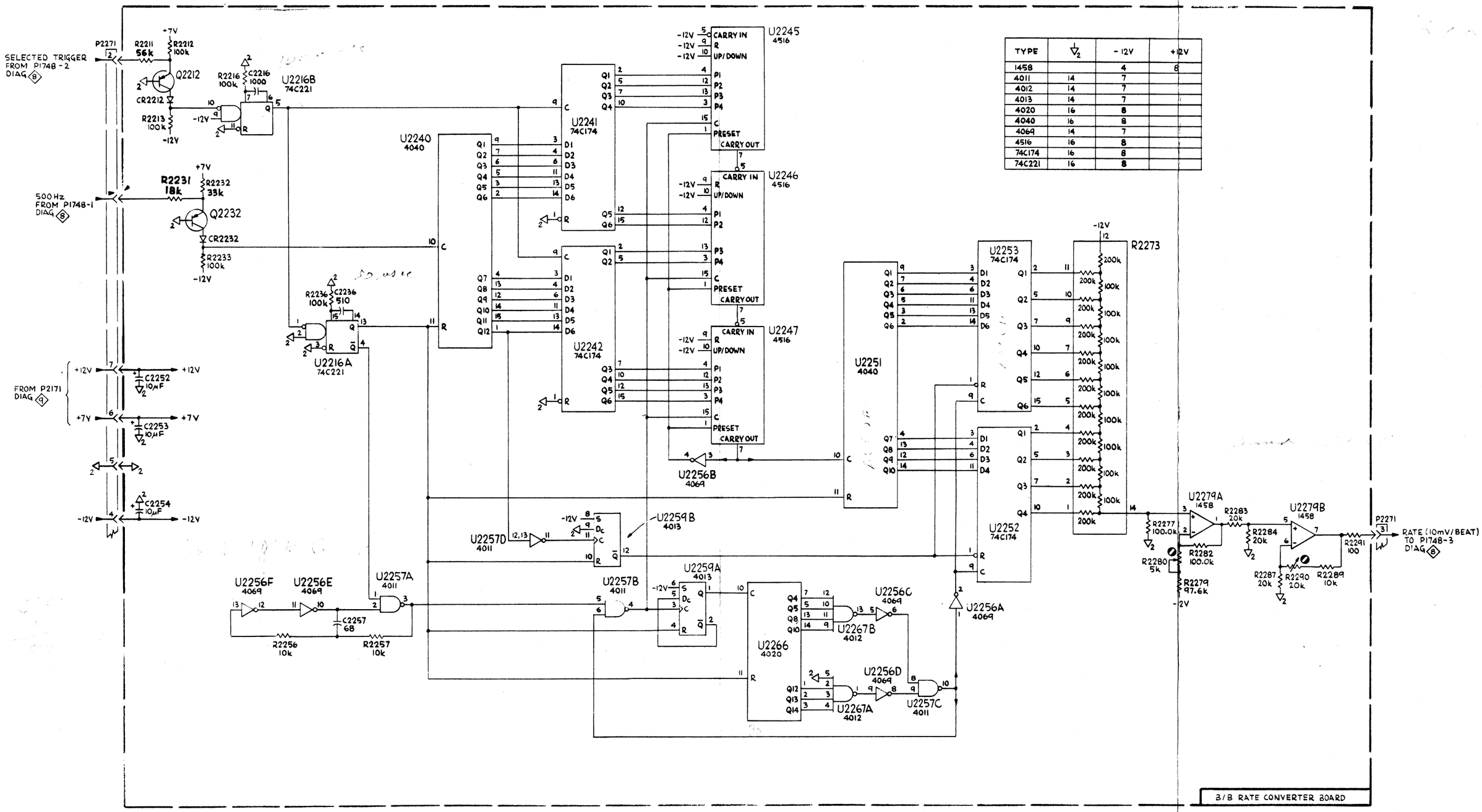

TYPE	½	-12V	+12V
1458		4	8
4011	14	7	
4012	14	7	
4013	14	7	
4020	16	8	
4040	16	8	
4069	14	7	
4516	16	8	
74C174	16	8	
74C221	16	8	

B/B RATE CONVERTER

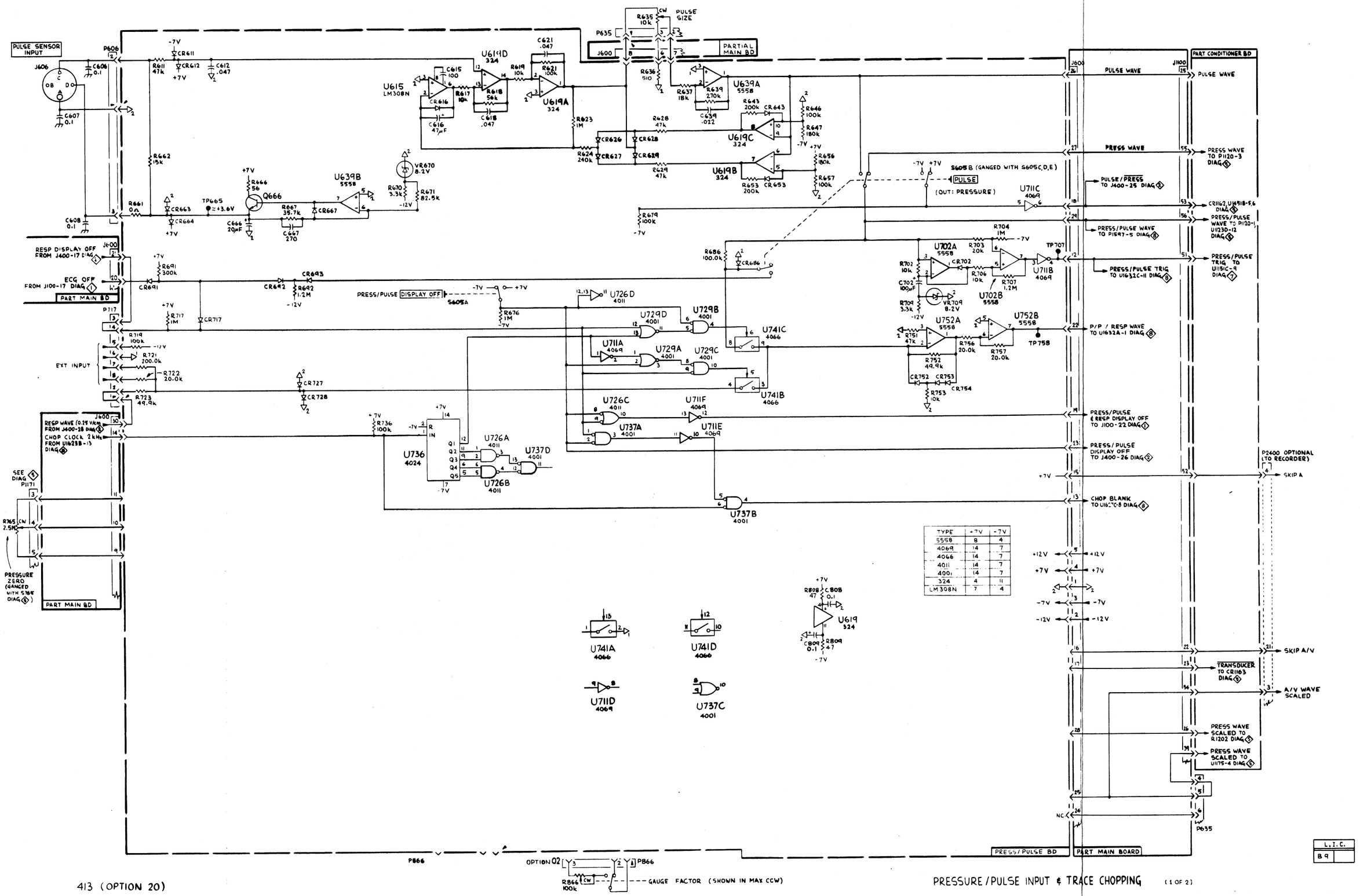

TYPE	+7V	-7V
5558	8	4
4069	14	7
4066	14	7
4011	14	7
4001	14	7
324	4	11
LM308N	7	4

PRESSURE/PULSE INPUT & TRACE CHOPPING (1 OF 2)

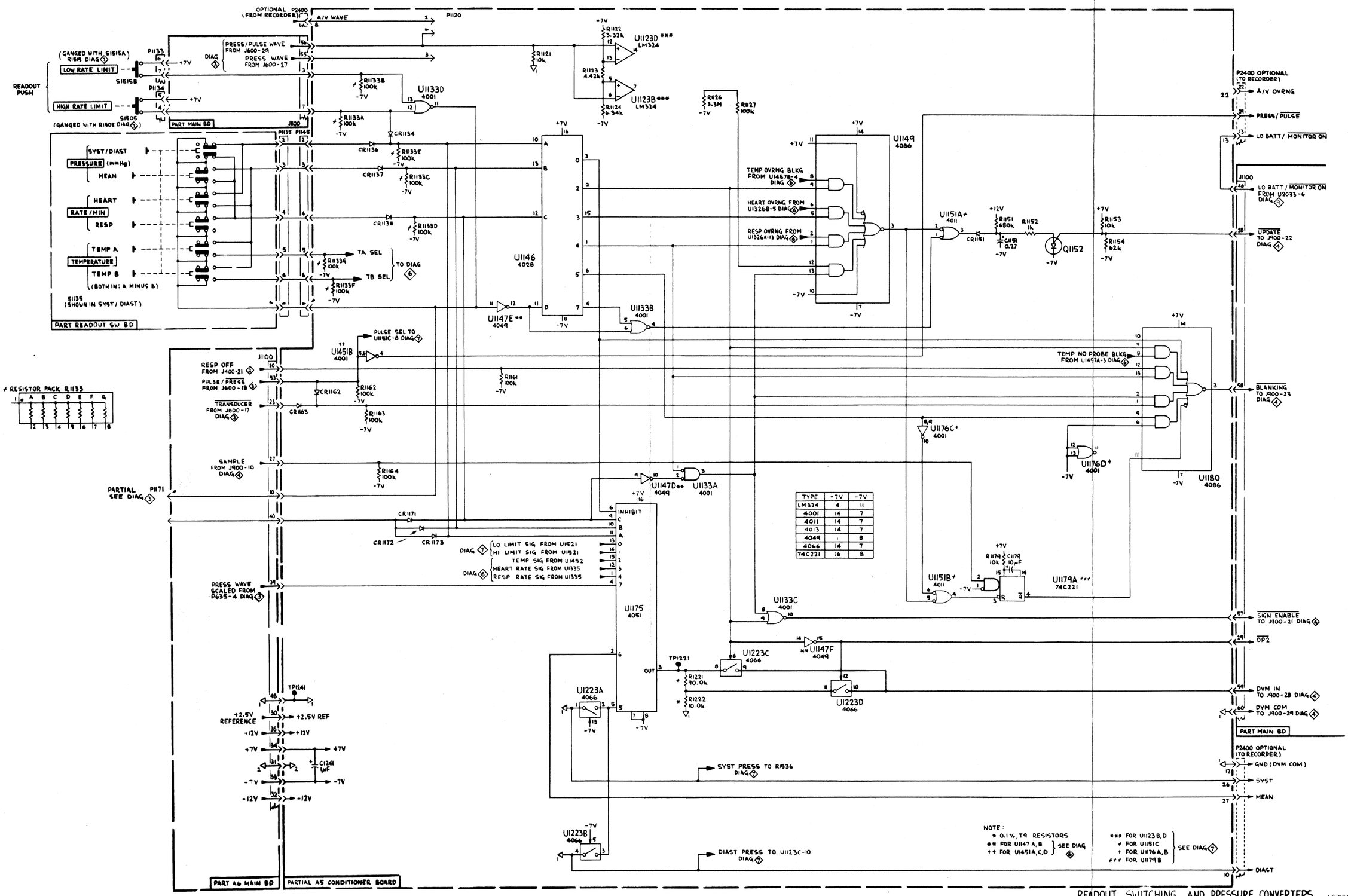

TYPE	+7V	-7V
LM324	4	11
4001	14	7
4011	14	7
4013	14	7
4049	1	8
4066	14	7
74C221	16	8

READOUT SWITCHING AND PRESSURE CONVERTERS (2 OF 2)

REPLACEABLE ELECTRICAL PARTS

PARTS ORDERING INFORMATION

Replacement parts are available from or through your local Tektronix, Inc. Field Office or representative.

Changes to Tektronix instruments are sometimes made to accommodate improved components as they become available, and to give you the benefit of the latest circuit improvements developed in our engineering department. It is therefore important, when ordering parts, to include the following information in your order: Part number, instrument type or number, serial number, and modification number if applicable.

If a part you have ordered has been replaced with a new or improved part, your local Tektronix, Inc. Field Office or representative will contact you concerning any change in part number.

Change information, if any, is located at the rear of this manual.

SPECIAL NOTES AND SYMBOLS

X000	Part first added at this serial number
00X	Part removed after this serial number

ITEM NAME

In the Parts List, an Item Name is separated from the description by a colon (:). Because of space limitations, an Item Name may sometimes appear as incomplete. For further Item Name identification, the U.S. Federal Cataloging Handbook H6-1 can be utilized where possible.

ABBREVIATIONS

ACTR	ACTUATOR	PLSTC	PLASTIC
ASSY	ASSEMBLY	QTZ	QUARTZ
CAP	CAPACITOR	RECP	RECEPTACLE
CER	CERAMIC	RES	RESISTOR
CKT	CIRCUIT	RF	RADIO FREQUENCY
COMP	COMPOSITION	SEL	SELECTED
CONN	CONNECTOR	SEMICOND	SEMICONDUCTOR
ELCTLT	ELECTROLYTIC	SENS	SENSITIVE
ELEC	ELECTRICAL	VAR	VARIABLE
INCAND	INCANDESCENT	WW	WIREWOUND
LED	LIGHT EMITTING DIODE	XFMR	TRANSFORMER
NONWIR	NON WIREWOUND	XTAL	CRYSTAL

CROSS INDEX—MFR. CODE NUMBER TO MANUFACTURER

Mfr. Code	Manufacturer	Address	City, State, Zip
0000C	GETTIG ENGINEERING AND MFG CO.		SPRINGMILL, PA 16875
00779	AMP, INC.	P O BOX 3608	HARRISBURG, PA 17105
00853	SANGAMO ELECTRIC CO., S. CAROLINA DIV.	P O BOX 128	PICKENS, SC 29671
01002	GENERAL ELECTRIC COMPANY, INDUSTRIAL AND POWER CAPACITOR PRODUCTS DEPARTMENT	JOHN STREET	HUDSON FALLS, NY 12839
01121	ALLEN-BRADLEY COMPANY	1201 2ND STREET SOUTH	MILWAUKEE, WI 53204
01295	TEXAS INSTRUMENTS, INC., SEMICONDUCTOR GROUP	P O BOX 5012, 13500 N CENTRAL EXPRESSWAY	DALLAS, TX 75222
02111	SPECTROL ELECTRONICS CORPORATION	17070 EAST GALE AVENUE	CITY OF INDUSTRY, CA 91745
02660	BUNKER RAMO CORP., CONNECTOR DIVISION	2801 S 25TH AVENUE	BROADVIEW, IL 60153
02735	RCA CORPORATION. SOLID STATE DIVISION	ROUTE 202	SOMERVILLE, NY 08876
03508	GENERAL ELECTRIC COMPANY. SEMI-CONDUCTOR PRODUCTS DEPARTMENT	ELECTRONICS PARK	SYRACUSE, NY 13201
03888	KDI PYROFILM CORPORATION	60 S JEFFERSON ROAD	WHIPPANY, NJ 07981
04222	AVX CERAMICS, DIVISION OF AVX CORP.	P O BOX 867, 19TH AVE. SOUTH	MURTLE BEACH, SC 29577
04713	MOTOROLA, INC., SEMICONDUCTOR PROD. DIV.	5005 E MCDOWELL RD,PO BOX 20923	PHOENIX, AZ 85036
05464	INDUSTRIAL ELECTRONIC ENGINEERING, INC.	7720 LEMONA AVENUE	VAN NUYS. CA 91405
06402	E.T.A PRODUCTS COMPANY OF AMERICA	6284 NORTH CICERO AVENUE	CHICAGO, IL 60646
07263	FAIRCHILD SEMICONDUCTOR, A DIV. OF FAIRCHILD CAMERA AND INSTRUMENT CORP.	464 ELLIS STREET	MOUNTAIN VIEW, CA 94042
07910	TELEDYNE SEMICONDUCTOR	12515 CHADRON AVE.	HAWTHORNE, CA 90250
08806	GENERAL ELECTRIC CO., MINIATURE LAMP PRODUCTS DEPARTMENT	NELA PARK	CLEVELAND, OH 44112
14752	ELECTRO CUBE INC.	1710 S. DEL MAR AVE.	SAN GABRIEL, CA 91776
14936	GENERAL INSTRUMENT CORP., SEMICONDUCTOR PRODUCTS GROUP	P.O. BOX 600,600 W. JOHN ST.	HICKSVILLE, NY 11802
18324	SIGNETICS CORP.	811 E ARQUES	SUNNYVALE, CA 94086
18788	GENERAL ILLUMINATION INC.	2958 N CLEVELAND	ST. PAUL, MN 55113
19396	IILINOIS TOOL WORKS, INC. PAKTRON DIV.	900 FOLLIN LANE, SE	VIENNA, VA 22180
22526	BERG ELECTRONICS, INC.	YOUK EXPRESSWAY	NEW CUMBERLAND, PA 17070
27014	NATIONAL SEMICONDUCTOR CORP.	2900 SEMICONDUCTOR DR.	SANTA CLARA, CA 95051
32997	BOURNS, INC., TRIMPOT PRODUCTS DIV.	1200 COLUMBIA AVE.	RIVERSIDE, CA 92507
53184	XCITON CORPORATION	5 HEMLOCK STREET	LATHAM, NY 12110
56289	SPRAGUE ELECTRIC CO.		NORTH ADAMS, MA 01247
71590	CENTRALAB ELECTRONICS, DIV. OF GLOBE-UNION, INC.	P O BOX 858	FORT DODGE, IA 50501
72982	ERIE TECHNOLOGICAL PRODUCTS, INC.	644 W. 12TH ST.	ERIE, PA 16512
73138	BECKMAN INSTRUMENTS, INC., HELIPOT DIV.	2500 HARBOR BLVD.	FULLERTON, CA 92634
74545	HUBBELL HARVEY. INC.	584 DERBY MILFORD ROAD	ORANGE, CT 06477
75042	TRW ELECTRONIC COMPONENTS, IRC FIXED RESISTORS, PHILADELPHIA DIVISION	401 N. BROAD ST.	PHILADELPHIA, PA 19108
80009	TEKTRONIX, INC.	P O BOX 500	BEAVERTON, OR 97077
80294	BOURNS, INC., INSTRUMENT DIV.	6135 MAGNOLIA AVE.	RIVERSIDE, CA 92506
81073	GRAYHILL, INC.	561 HILLGROVE AVE., PO BOX 373	LA GRANGE, IL 60525
81312	WINCHESTER ELECTRONICS DIVISION LITTON INDUSTRIES, INC.	MAIN ST. AND HILLSIDE AVE.	OAKVILLE, CT 06779
82389	SWITCHCRAFT, INC.	5555 N. ELSTON AVE.	CHICAGO, IL 60630
90201	MALLORY CAPACITOR CO., DIV. OF P. R. MALLORY AND CO., INC.	3029 E WASHINGTON STREET P O BOX 372	INDIANAPOLIS, IN 46206
91637	DALE ELECTRONICS, INC	P. O. BOX 609	COLUMBUS, NE 68601
94696	MAGNECRAFT ELECTRIC COMPANY	5575 N LYNCH AVENUE	CHICAGO, IL 60630

Ckt No.	Tektronix Part No.	Serial/Model No. Eff	Dscont	Name & Description	Mfr Code	Mfr Part Number
A1	670-5069-00			CKT BOARD ASSY:ECG	80009	670-5069-00
A2	670-5073-00			CKT BOARD ASSY:RESPIRATION	80009	670-5073-00
A3	670-5070-00			CKT BOARD ASSY:PRESSURE/PULSE	80009	670-5070-00
A4	670-5072-00			CKT BOARD ASSY:DVM	80009	670-5072-00
A5	670-5071-00			CKT BOARD ASSY:CONDITIONER	80009	670-5071-00
A6	670-5068-00			CKT BOARD ASSY:MAIN	80009	670-5068-00
A7	670-5074-00			CKT BOARD ASSY:HIGH VOLTAGE	80009	670-5074-00
A8	670-5076-00			CKT BOARD ASSY:DISPLAY	80009	670-5076-00
A9	670-5075-00			CKT BOARD ASSY:SWEEP-SWITCH	80009	670-5075-00
A10	670-5077-00			CKT BOARD ASSY:READOUT SWITCH	80009	670-5077-00
A11	670-4757-00			CKT BOARD ASSY:FUSE HOLDER	80009	670-4754-00
B1982(4)[1]	-----	-----		BATTERY,STORAGE:1.2V		
C102	290-0534-00			CAP.,FXD,ELCTLT:1UF,20%,35V	56289	196D105X0035HA1
C103	290-0534-00			CAP.,FXD,ELCTLT:1UF,20%,35V	56289	196D105X0035HA1
C112	290-0536-00			CAP.,FXD,ELCTLT:10UF,20%,25V	90201	TDC106M025FL
C113	290-0534-00			CAP.,FXD,ELCTLT:1UF,20%,35V	56289	196D105X0035HA1
C116	283-0032-00			CAP.,FXD,CER DI:470PF,5%,500V	72982	831-500Z5D471J
C131	283-0128-00			CAP.,FXD,CER DI:100PF,5%,500V	72982	871-536T2H101J
C137	283-0175-00			CAP.,FXD,CER DI:10PF,5%,200V	72982	8101-200C0G0100J
C141	283-0128-00			CAP.,FXD,CER DI:100PF,5%,500V	72982	871-536T2H101J
C147	283-0110-00			CAP.,FXD,CER DI:0.005UF,+80-20%,150V	56289	19C242B
C161	283-0128-00			CAP.,FXD,CER DI:100PF,5%,500V	72982	871-536T2H101J
C162	283-0594-00			CAP.,FXD,MICA D:0.001UF,1%,100V	00853	D151F102F0
C183	283-0238-00			CAP.,FXD,CER DI:0.01UF,10%,50V	72982	8121N071W5R103K
C192	283-0268-00			CAP.,FXD,CER DI:0.015UF,10%,50V	72982	8131N075W5R153K
C199	283-0268-00			CAP.,FXD,CER DI:0.015UF,10%,50V	72982	8131N075W5R153K
C202	285-0809-00			CAP.,FXD.PLSTC:1UF,10%,50V	56289	LP66A1A105K
C230	283-0341-00			CAP.,FXD,CER DI:0.047UF,10%,100V	72982	8131N127X7R0473K
C238	283-0212-00			CAP.,FXD,CER DI:2UF,20%,50V	72982	8141N064Z5U0205M
C291	290-0536-00			CAP.,FXD,ELCTLT:10UF,20%,25V	90201	TDC106M025FL
C292	290-0512-00			CAP.,FXD,ELCTLT:22UF,20%,15V	56289	196D226X0015KA1
C297	290-0536-00			CAP.,FXD,ELCTLT:10UF,20%,25V	90201	TDC106M025FL
C298	290-0512-00			CAP.,FXD,ELCTLT:22UF,20%,15V	56289	196D226X0015KA1
C306	283-0128-00			CAP.,FXD,CER DI:100PF,5%,500V	72982	871-536T2H101J
C309	283-0339-00			CAP.,FXD,CER DI:0.22UF.10%,50V	72982	8131N075W5R224K
C312	283-0100-00			CAP.,FXD,CER DI:0.0047UF,10%,200V	56289	273C3
C321	290-0512-00			CAP.,FXD,ELCTLT:22UF,20%,15V	56289	196D226X0015KA1
C322	290-0512-00			CAP.,FXD,ELCTLT:22UF,20%,15V	56289	196D226X0015KA1
C327	283-0177-00			CAP.,FXD,CER DI:1UF,+80-20%.25V	72982	8131N039 E 105Z
C343	290-0536-00			CAP.,FXD,ELCTLT:10UF,20%,25V	90201	TDC106M025FL
C356	290-0536-00			CAP.,FXD ELCTLT:10UF,20%,25V	90201	TDC106M025FL
C363	285-0598-00			CAP.,FXD,PLSTC:0.01UF,5%,100V	01002	61F10AC103
C371	285-1076-00			CAP.,FXD,PLSTC:0.2UF,5%,100V	14752	230B1B204J
C373	290-0523-00			CAP.,FXD,ELCTLT:2.2UF,20%,20V	56289	196D225X0025HA1
C378	283-0339-00			CAP.,FXD,CER DI:0.22UF.10%,50V	72982	8131N075W5R224K
C379	283-0103-00			CAP.,FXD,CER DI:180PF,5%,500V	56289	40C638
C381	283-0177-00			CAP.,FXD,CER DI:1UF,+80-20%,25V	72982	8131N039 E 105Z
C384	283-0238-00			CAP.,FXD,CER DI:0.01UF,10%,50V	72982	8121N071W5R103K
C387	283-0190-00			CAP.,FXD,CER DI:0.47UF,5%,50V	72982	8141N077W5R474J
C389	290-0536-00			CAP.,FXD,ELCTLT:10UF,20%,25V	90201	TDC106M025FL
C407	290-0536-00			CAP.,FXD,ELCTLT:10UF,20%,25V	90201	TDC106M025FL
C409	283-0594-00			CAP.,FXD,MICA D:0.001UF,1%,100V	00853	D151F102F0

[1]Furnished as a unit with 119-0443-01.

Ckt No.	Tektronix Part No.	Serial/Model No. Eff	Dscont	Name & Description	Mfr Code	Mfr Part Number
C412	283-0111-00			CAP.,FXD,CER DI:0.1UF,20%,50V	72982	8121-N088Z5U104M
C413	283-0111-00			CAP.,FXD,CER DI:0.1UF,20%.50V	72982	8121-N088Z5U104M
C414	281-0504-00			CAP.,FXD,CER DI:10PF,+/-1PF,500V	72982	301-055C0G0100F
C423	283-0060-00			CAP.,FXD,CER DI:100PF.5%,200V	72982	855-535U2J101J
C424	283-0111-00			CAP ,FXD,CER DI:0.1UF,20%,50V	72982	8121-N088Z5U104M
C439	283-0111-00			CAP.,FXD.CER DI:0.1UF,20%,50V	72982	8121-N088Z5U104M
C441	283-0111-00			CAP.,FXD,CER DI:0.1UF,20%,50V	72982	8121-N088Z5U104M
C449	285-1097-00			CAP.,FXD,PLSTC:0.47UF,10%,100V	14752	230B1B474K
C461	285-1096-00			CAP.,FXD,PLSTC:1UF,10%,100V	14752	230B1B105K
C465	283-0111-00			CAP.,FXD,CER DI:0.1UF,20%,50V	72982	8121-N088Z5U104M
C467	283-0111-00			CAP.,FXD.CER DI:0.1UF,20%,50V	72982	8121-N088Z5U104M
C476	283-0212-00			CAP.,FXD,CER DI:2UF,20%,50V	72982	8141N064Z5U0205M
C491	290-0536-00			CAP.,FXD ELCTLT:10UF,20%,25V	90201	TDC106M025FL
C492	290-0512-00			CAP.,FXD.ELCTLT:22UF,20%,15V	56289	196D226X0015KA1
C497	290-0536-00			CAP.,FXD,ELCTLT:10UF,20%,25V	90201	TDC106M025FL
C498	290-0512-00			CAP.,FXD,ELCTLT:22UF,20%,15V	56289	196D226X0015KA1
C506	283-0060-00			CAP.,FXD,CER DI:100PF,5%.200V	72982	855-535U2J101J
C508	290-0512-00			CAP.,FXD,ELCTLT:22UF,20%,15V	56289	196D226X0015KA1
C509	290-0512-00			CAP.,FXD,ELCTLT:22UF,20%,15V	56289	196D226X0015KA1
C511	283-0060-00			CAP ,FXD,CER DI:100PF,5%,200V	72982	855-535U2J101J
C512	283-0111-00			CAP.,FXD,CER DI:0.1UF,20%,50V	72982	8121-N088Z5U104M
C521	290-0726-00			CAP.,FXD,ELCTLT:220UF,20%,10V	56289	196D227X0010TE3
C522	290-0726-00			CAP.,FXD.ELCTLT:220UF,20%,10V	56289	196D227X0010TE3
C527	283-0177-00			CAP.,FXD,CER DI:1UF,+80-20%,25V	72982	8131N039 E 105Z
C543	290-0717-00			CAP.,FXD,ELCTLT:15UF,20%,50V	56289	196D156X0050PE3
C567	285-1076-00			CAP.,FXD,PLSTC:0.2UF,5%,100V	14752	230B1B204J
C571	285-1076-00			CAP.,FXD,PLSTC:0.2UF,5%,100V	14752	230B1B204J
C574	290-0525-00			CAP.,FXD.ELCTLT:4.7UF,20%,50V	56289	196D475X0050KA1
C579	290-0721-00			CAP.,FXD,ELCTLT:100UF,20%,20V	56289	196D107X0020TE3
C606	283-0211-00			CAP.,FXD,CER DI:0.1UF,10%,200V	72982	8141N227C104K
C607	283-0211-00			CAP.,FXD,CER DI:0.1UF,10%,200V	72982	8141N227C104K
C608	283-0211-00			CAP.,FXD CER DI:0.1UF,10%,200V	72982	8141N227C104K
C612	285-1069-00			CAP.,FXD,PLSTC:0.047UF,200V	14752	C2319
C615	281-0523-00			CAP.,FXD,CER DI:100PF,+/-20PF,500V	72982	301-000U2M0101M
C616	290-0717-00			CAP.,FXD,ELCTLT:15UF,20%,50V	56289	196D156X0050PE3
C618	285-1069-00			CAP.,FXD,PLSTC:0.047UF,200V	14752	C2319
C621	285-1069-00			CAP.,FXD,PLSTC:0.047UF,200V	14752	C2319
C639	285-1101-00			CAP.,FXD,PLSTC:0.022UF,10%,200V	19396	223K02PT485
C666	290-0441-00			CAP.,FXD,ELCTLT:20UF,10%,10V	56289	109D206X9010C2
C667	281-0543-00			CAP.,FXD,CER DI:270PF,10%,500V	72982	301055X5P271K
C702	290-0721-00			CAP.,FXD,ELCTLT:100UF,20%,20V	56289	196D107X0020TE3
C767	290-0721-00			CAP.,FXD,ELCTLT:100UF,20%,20V	56289	196D107X0020TE3
C769	281-0523-00			CAP.,FXD,CER DI:100PF,+/-20PF,500V	72982	301-000U2M0101M
C773	290-0527-00			CAP.,FXD,ELCTLT:15UF,20%,20V	90201	TDC156M020FL
C787	290-0721-00			CAP.,FXD,ELCTLT:100UF,20%,20V	56289	196D107X0020TE3
C789	281-0523-00			CAP.,FXD.CER DI:100PF,+/-20PF,500V	72982	301-000U2M0101M
C794	281-0523-00			CAP.,FXD,CER DI:100PF,+/-20PF,500V	72982	301-000U2M0101M
C796	283-0067-00			CAP.,FXD,CER DI:0.001UF,10%,200V	72982	835-515B102K
C797	283-0067-00			CAP.,FXD,CER DI:0.001UF,10%,200V	72982	835-515B102K
C806	290-0534-00			CAP.,FXD,ELCTLT:1UF,20%,35V	56289	196D105X0035HA1
C807	290-0534-00			CAP.,FXD.ELCTLT:1UF,20%,35V	56289	196D105X0035HA1
C808	283-0167-00			CAP.,FXD,CER DI:0.1UF,10%,100V	72982	81314147 C 104K
C809	283-0167-00			CAP.,FXD,CER DI:0.1UF,10%,100V	72982	81314147 C 104K

Ckt No.	Tektronix Part No.	Serial/Model No. Eff	Dscont	Name & Description	Mfr Code	Mfr Part Number
C821	281-0523-00			CAP.,FXD,CER DI:100PF,+/-20PF,500V	72982	301-000U2M0101M
C826	281-0605-00			CAP.,FXD,CER DI:200PF,10%,500V	04222	7001-1375
C827	283-0194-00			CAP.,FXD,CER DI:4.7UF,20%,50V	72982	8151N080651475M
C831	281-0523-00			CAP.,FXD,CER DI:100PF,+/-20PF,500V	72982	301-000U2M0101M
C836	281-0605-00			CAP.,FXD,CER DI:200PF,10%,500V	04222	7001-1375
C844	283-0059-00			CAP ,FXD,CER DI:1UF,+80-20%,25V	72982	8141N038E105Z
C862	281-0523-00			CAP.,FXD,CER DI:100PF,+/-20PF,500V	72982	301-000U2M0101M
C871	283-0059-00			CAP.,FXD,CER DI:1UF,+80-20%,25V	72982	8141N038E105Z
C874	283-0203-00			CAP.,FXD,CER DI:0.47UF,20%,50V	72982	8131N075 E474M
C876	283-0167-00			CAP.,FXD,CER DI:0.1UF,10%,100V	72982	81314147 C 104K
C877	283-0167-00			CAP.,FXD,CER DI:0.1UF,10%,100V	72982	81314147 C 104K
C878	283-0167-00			CAP.,FXD,CER DI:0.1UF,10%,100V	72982	81314147 C 104K
C911	290-0534-00			CAP.,FXD,ELCTLT:1UF,20%,35V	56289	196D105X0035HA1
C919	290-0536-00			CAP.,FXD,ELCTLT:10UF,20%,25V	90201	TDC106M025FL
C936	283-0065-00			CAP.,FXD,CER DI:0.001UF,5%,100V	72982	805-505B102J
C939	285-1096-00			CAP.,FXD,PLSTC:1UF,10%,100V	14752	230B1B105K
C1003	290-0512-00			CAP.,FXD,ELCTLT:22UF,20%,15V	56289	196D226X0015KA1
C1006	290-0536-00			CAP.,FXD,ELCTLT:10UF,20%,25V	90201	TDC106M025FL
C1011	283-0003-00			CAP.,FXD,CER DI:0.01UF,+80-20%,150V	72982	855-558Z5U-103Z
C1012	283-0057-00			CAP.,FXD,CER DI:0.1UF,+80-20%,200V	56289	274C10
C1013	283-0057-00			CAP.,FXD,CER DI:0.1UF,+80-20%,200V	56289	274C10
C1016	283-0003-00			CAP.,FXD,CER DI:0.01UF,+80-20%,150V	72982	855-558Z5U-103Z
C1032	283-0660-00			CAP.,FXD,MICA D:510PF,2%,500V	00853	D155F511G0
C1039	285-0598-00			CAP.,FXD,PLSTC:0.01UF,5%,100V	01002	61F10AC103
C1126	290-0534-00			CAP ,FXD,ELCTLT:1UF,20%,35V	56289	196D105X0035HA1
C1151	290-0580-00			CAP.,FXD,ELCTLT:0.27UF,20%,50V	56289	196D274X0050HA1
C1179	290-0536-00			CAP.,FXD,ELCTLT:10UF,20%,25V	90201	TDC106M025FL
C1207	290-0722-00			CAP.,FXD,ELCTLT:100UF,20%,10V	56289	196D107X0010PE3
C1209	290-0536-00			CAP.,FXD,ELCTLT:10UF,20%,25V	90201	TDC106M025FL
C1212	290-0722-00			CAP.,FXD,ELCTLT:100UF,20%,10V	56289	196D107X0010PE3
C1213	290-0536-00			CAP.,FXD,ELCTLT:10UF,20%,25V	90201	TDC106M025FL
C1231	290-0722-00			CAP.,FXD,ELCTLT:100UF,20%,10V	56289	196D107X0010PE3
C1233	290-0722-00			CAP.,FXD,ELCTLT:100UF,20%,10V	56289	196D107X0010PE3
C1236	290-0722-00			CAP.,FXD,ELCTLT:100UF,20%,10V	56289	196D107X0010PE3
C1237	290-0536-00			CAP.,FXD,ELCTLT:10UF,20%,25V	90201	TDC106M025FL
C1241	290-0534-00			CAP.,FXD,ELCTLT:1UF,20%,35V	56289	196D105X0035HA1
C1242	290-0722-00			CAP.,FXD,ELCTLT:100UF,20%,10V	56289	196D107X0010PE3
C1246	290-0722-00			CAP.,FXD,ELCTLT:100UF,20%,10V	56289	196D107X0010PE3
C1251	290-0722-00			CAP.,FXD,ELCTLT:100UF,20%,10V	56289	196D107X0010PE3
C1253	290-0722-00			CAP.,FXD,ELCTLT:100UF,20%,10V	56289	196D107X0010PE3
C1256	290-0722-00			CAP.,FXD,ELCTLT:100UF,20%,10V	56289	196D107X0010PE3
C1257	290-0536-00			CAP.,FXD,ELCTLT:10UF,20%,25V	90201	TDC106M025FL
C1312	290-0572-00			CAP.,FXD,ELCTLT:0.1UF,20%,50V	56289	196D104X0050HA1
C1316	285-1097-00			CAP.,FXD,PLSTC:0.47UF,10%,100V	14752	230B1B474K
C1326	290-0536-00			CAP.,FXD.ELCTLT:10UF,20%,25V	90201	TDC106M025FL
C1331	290-0536-00			CAP.,FXD,ELCTLT:10UF,20%,25V	90201	TDC106M025FL
C1334	290-0536-00			CAP.,FXD,ELCTLT:10UF,20%,25V	90201	TDC106M025FL
C1336	290-0722-00			CAP.,FXD,ELCTLT:100UF,20%,10V	56289	196D107X0010PE3
C1337	290-0536-00			CAP.,FXD,ELCTLT:10UF,20%,25V	90201	TDC106M025FL
C1342	290-0572-00			CAP.,FXD,ELCTLT:0.1UF,20%,50V	56289	196D104X0050HA1
C1346	285-1096-00			CAP.,FXD,PLSTC:1UF,10%,100V	14752	230B1B105K
C1356	290-0536-00			CAP.,FXD,ELCTLT:10UF,20%,25V	90201	TDC106M025FL
C1361	290-0535-00			CAP.,FXD,ELCTLT:33UF,20%,10V	56289	196D336X0010KA1

Ckt No.	Tektronix Part No.	Serial/Model No. Eff	Dscont	Name & Description	Mfr Code	Mfr Part Number
C1364	290-0530-00			CAP.,FXD,ELCTLT:68UF,20%,6V	90201	TDC686M006NLF
C1366	290-0724-00			CAP.,FXD,ELCTLT:330UF,20%,6V	90201	TDC337M006WSH
C1367	290-0535-00			CAP.,FXD,ELCTLT:33UF,20%,10V	56289	196D336X0010KA1
C1404	290-0536-00			CAP.,FXD,ELCTLT:10UF,20%,25V	90201	TDC106M025FL
C1437	290-0536-00			CAP.,FXD,ELCTLT:10UF,20%,25V	90201	TDC106M025FL
C1464	290-0536-00			CAP.,FXD,ELCTLT:10UF,20%,25V	90201	TDC106M025FL
C1522	290-0536-00			CAP.,FXD,ELCTLT:10UF,20%,25V	90201	TDC106M025FL
C1543	290-0536-00			CAP.,FXD,ELCTLT:10UF,20%,25V	90201	TDC106M025FL
C1552	290-0722-00			CAP.,FXD,ELCTLT:100UF,20%,10V	56289	196D107X0010PE3
C1562	283-0178-00			CAP.,FXD,CER DI:0.1UF,+80-20%,100V	72982	8131N145 E 104Z
C1563	283-0178-00			CAP.,FXD,CER DI:0.1UF,+80-20%,100V	72982	8131N145 E 104Z
C1564	283-0178-00			CAP.,FXD,CER DI:0.1UF,+80-20%.100V	72982	8131N145 E 104Z
C1571	290-0534-00			CAP.,FXD,ELCTLT:1UF,20%,35V	56289	196D105X0035HA1
C1581	283-0178-00			CAP.,FXD,CER DI:0.1UF,+80-20%,100V	72982	8131N145 E 104Z
C1591	290-0536-00			CAP.,FXD,ELCTLT:10UF,20%,25V	90201	TDC106M025FL
C1619	283-0655-00			CAP.,FXD,MICA D:0.0033UF,1%,500V	00853	D195F332F0
C1636	281-0786-00			CAP.,FXD,CER DI:150PF,10%,100V	72982	390049X5P0151K
C1637	281-0788-00			CAP.,FXD,CER DI:470PF,10%,100V	72982	8005H9AADW5R471K
C1641	281-0770-00			CAP.,FXD,CER DI:0.001UF,20%,100V	72982	314022X5P0102M
C1648	281-0788-00			CAP.,FXD,CER DI:470PF,10%,100V	72982	8005H9AADW5R471K
C1656	281-0770-00			CAP.,FXD,CER DI:0.001UF,20%,100V	72982	314022X5P0102M
C1684	281-0770-00			CAP.,FXD,CER DI:0.001UF,20%,100V	72982	314022X5P0102M
C1706	281-0773-00			CAP.,FXD,CER DI:0.01UF,10%,100V	72982	8005H9AADW5R103K
C1732	281-0773-00			CAP.,FXD,CER DI:0.01UF,10%,100V	72982	8005H9AADW5R103K
C1734	281-0773-00			CAP.,FXD,CER DI:0.01UF,10%,100V	72982	8005H9AADW5R103K
C1751	290-0721-00			CAP.,FXD,ELCTLT:100UF,20%,20V	56289	196D107X0020TE3
C1771	283-0111-00			CAP.,FXD.CER DI:0.1UF,20%,50V	72982	8121-N088Z5U104M
C1777	281-0763-00			CAP.,FXD,CER DI:47PF,10%,100V	72982	390049X5P0470K
C1794	281-0763-00			CAP.,FXD,CER DI:47PF,10%,100V	72982	390049X5P0470K
C1797	290-0536-00			CAP.,FXD,ELCTLT:10UF,20%,25V	90201	TDC106M025FL
C1837	283-0111-00			CAP.,FXD,CER DI:0.1UF,20%,50V	72982	8121-N088Z5U104M
C1911	290-0508-00			CAP.,FXD,ELCTLT:18,000UF,+100-10%,15V	56289	68D10444
C1916	290-0536-00			CAP.,FXD,ELCTLT:10UF,20%.25V	90201	TDC106M025FL
C1933	290-0721-00			CAP.,FXD,ELCTLT:100UF,20%,20V	56289	196D107X0020TE3
C1939	283-0111-00			CAP.,FXD,CER DI:0.1UF,20%,50V	72982	8121-N088Z5U104M
C1959	290-0536-00			CAP.,FXD,ELCTLT:10UF,20%,25V	90201	TDC106M025FL
C1961	290-0536-00			CAP.,FXD,ELCTLT:10UF,20%,25V	90201	TDC106M025FL
C1969	283-0198-00			CAP.,FXD,CER DI:0.22UF,20%,50V	72982	8131N075 E224M
C1990	283-0111-00			CAP.,FXD,CER DI:0.1UF,20%,50V	72982	8121-N088Z5U104M
C1994	290-0536-00			CAP.,FXD,ELCTLT:10UF,20%,25V	90201	TDC106M025FL
C2016	283-0111-00			CAP.,FXD.CER DI:0.1UF,20%,50V	72982	8121-N088Z5U104M
C2041	290-0721-00			CAP.,FXD,ELCTLT:100UF,20%,20V	56289	196D107X0020TE3
C2053	283-0111-00			CAP.,FXD,CER DI:0.1UF,20%,50V	72982	8121-N088Z5U104M
C2064	283-0111-00			CAP.,FXD,CER DI:0.1UF,20%,50V	72982	8121-N088Z5U104M
C2073	290-0809-00			CAP.,FXD,ELCTLT:6.8UF,20%,50V	56289	196D685X0050PE4
C2077	290-0721-00			CAP.,FXD,ELCTLT:100UF,20%,20V	56289	196D107X0020TE3
C2081	290-0726-00			CAP.,FXD,ELCTLT:220UF,20%,10V	56289	196D227X0010TE3
C2082	290-0726-00			CAP.,FXD,ELCTLT:220UF,20%,10V	56289	196D227X0010TE3
C2083	290-0726-00			CAP.,FXD,ELCTLT:220UF,20%,10V	56289	196D227X0010TE3
C2087	290-0726-00			CAP.,FXD,ELCTLT:220UF,20%,10V	56289	196D227X0010TE3
C2088	290-0726-00			CAP.,FXD,ELCTLT:220UF,20%,10V	56289	196D227X0010TE3
C2089	290-0726-00			CAP.,FXD,ELCTLT:220UF,20%,10V	56289	196D227X0010TE3
C2093	290-0721-00			CAP.,FXD,ELCTLT:100UF,20%,20V	56289	196D107X0020TE3

Ckt No.	Tektronix Part No.	Serial/Model No. Eff	Dscont	Name & Description	Mfr Code	Mfr Part Number
C2097	290-0809-00			CAP.,FXD,ELCTLT:6.8UF,20%,50V	56289	196D685X0050PE4
C2121	283-0280-00			CAP.,FXD,CER DI:2200PF,10%,2000V	56289	29C558
C2122	283-0280-00			CAP.,FXD.CER DI:2200PF,10%,2000V	56289	29C558
C2123	283-0280-00			CAP.,FXD,CER DI:2200PF,10%.2000V	56289	29C558
C2124	283-0280-00			CAP.,FXD,CER DI:2200PF,10%,2000V	56289	29C558
C2125	283-0280-00			CAP.,FXD.CER DI:2200PF,10%,2000V	56289	29C558
C2126	283-0280-00			CAP.,FXD,CER DI:2200PF,10%,2000V	56289	29C558
C2146	283-0111-00			CAP.,FXD,CER DI:0.1UF,20%,50V	72982	8121-N088Z5U104M
C2161	283-0006-00			CAP.,FXD,CER DI:0.02UF,+80-20%,500V	72982	841-541E203Z
C2163	283-0006-00			CAP.,FXD,CER DI:0.02UF,+80-20%,500V	72982	841-541E203Z
CB1906	260-1878-00			CIRCUIT BREAKER:SPST,0.5A,250V	06402	41-06-P30
CB1907	260-1877-00			CIRCUIT BREAKER:SPST,0.3A,250V	06402	41-06-P30
CR106	152-0141-02			SEMICOND DEVICE:SILICON,30V,150MA	07910	1N4152
CR107	152-0141-02			SEMICOND DEVICE:SILICON,30V,150MA	07910	1N4152
CR108	152-0141-02			SEMICOND DEVICE:SILICON,30V,150MA	07910	1N4152
CR109	152-0141-02			SEMICOND DEVICE:SILICON,30V,150MA	07910	1N4152
CR135	152-0246-00			SEMICOND DEVICE:SILICON,400PIV,200MA	07910	CD12676
CR136	152-0246-00			SEMICOND DEVICE:SILICON,400PIV,200MA	07910	CD12676
CR154	152-0141-02			SEMICOND DEVICE:SILICON,30V,150MA	07910	1N4152
CR165	152-0246-00			SEMICOND DEVICE:SILICON,400PIV,200MA	07910	CD12676
CR166	152-0246-00			SEMICOND DEVICE:SILICON,400PIV,200MA	07910	CD12676
CR223	152-0141-02			SEMICOND DEVICE:SILICON,30V,150MA	07910	1N4152
CR224	152-0141-02			SEMICOND DEVICE:SILICON,30V,150MA	07910	1N4152
CR237	152-0141-02			SEMICOND DEVICE:SILICON,30V,150MA	07910	1N4152
CR244	152-0141-02			SEMICOND DEVICE:SILICON,30V,150MA	07910	1N4152
CR246	152-0141-02			SEMICOND DEVICE:SILICON,30V,150MA	07910	1N4152
CR249	152-0141-02			SEMICOND DEVICE:SILICON,30V,150MA	07910	1N4152
CR252	152-0141-02			SEMICOND DEVICE:SILICON,30V,150MA	07910	1N4152
CR257	152-0141-02			SEMICOND DEVICE:SILICON,30V,150MA	07910	1N4152
CR258	152-0141-02			SEMICOND DEVICE:SILICON,30V,150MA	07910	1N4152
CR316	152-0141-02			SEMICOND DEVICE:SILICON,30V,150MA	07910	1N4152
CR317	152-0141-02			SEMICOND DEVICE:SILICON,30V,150MA	07910	1N4152
CR326	152-0141-02			SEMICOND DEVICE:SILICON,30V,150MA	07910	1N4152
CR327	152-0141-02			SEMICOND DEVICE:SILICON,30V,150MA	07910	1N4152
CR329	152-0141-02			SEMICOND DEVICE:SILICON,30V,150MA	07910	1N4152
CR343	152-0141-02			SEMICOND DEVICE:SILICON,30V,150MA	07910	1N4152
CR351	152-0141-02			SEMICOND DEVICE:SILICON,30V,150MA	07910	1N4152
CR352	152-0141-02			SEMICOND DEVICE:SILICON,30V,150MA	07910	1N4152
CR353	152-0141-02			SEMICOND DEVICE:SILICON,30V,150MA	07910	1N4152
CR354	152-0141-02			SEMICOND DEVICE:SILICON,30V,150MA	07910	1N4152
CR356	152-0141-02			SEMICOND DEVICE:SILICON,30V,150MA	07910	1N4152
CR373	152-0141-02			SEMICOND DEVICE:SILICON,30V,150MA	07910	1N4152
CR389	152-0141-02			SEMICOND DEVICE:SILICON,30V,150MA	07910	1N4152
CR391	152-0141-02			SEMICOND DEVICE:SILICON,30V,150MA	07910	1N4152
CR411	152-0141-02			SEMICOND DEVICE:SILICON,30V,150MA	07910	1N4152
CR427	152-0141-02			SEMICOND DEVICE:SILICON,30V,150MA	07910	1N4152
CR428	152-0141-02			SEMICOND DEVICE:SILICON,30V.150MA	07910	1N4152
CR476	152-0141-02			SEMICOND DEVICE:SILICON,30V,150MA	07910	1N4152
CR481	152-0141-02			SEMICOND DEVICE:SILICON,30V,150MA	07910	1N4152
CR482	152-0141-02			SEMICOND DEVICE:SILICON,30V,150MA	07910	1N4152
CR484	152-0141-02			SEMICOND DEVICE:SILICON,30V,150MA	07910	1N4152
CR485	152-0141-02			SEMICOND DEVICE:SILICON,30V,150MA	07910	1N4152

Ckt No.	Tektronix Part No.	Serial/Model No. Eff	Dscont	Name & Description	Mfr Code	Mfr Part Number
CR486	152-0141-02			SEMICOND DEVICE:SILICON,30V,150MA	07910	1N4152
CR516	152-0141-02			SEMICOND DEVICE:SILICON,30V,150MA	07910	1N4152
CR517	152-0141-02			SEMICOND DEVICE:SILICON,30V,150MA	07910	1N4152
CR526	152-0141-02			SEMICOND DEVICE:SILICON,30V,150MA	07910	1N4152
CR527	152-0141-02			SEMICOND DEVICE:SILICON,30V,150MA	07910	1N4152
CR529	152-0141-02			SEMICOND DEVICE:SILICON,30V,150MA	07910	1N4152
CR543	152-0141-02			SEMICOND DEVICE:SILICON,30V,150MA	07910	1N4152
CR551	152-0141-02			SEMICOND DEVICE:SILICON,30V,150MA	07910	1N4152
CR552	152-0141-02			SEMICOND DEVICE:SILICON,30V,150MA	07910	1N4152
CR553	152-0141-02			SEMICOND DEVICE:SILICON,30V,150MA	07910	1N4152
CR554	152-0141-02			SEMICOND DEVICE:SILICON,30V,150MA	07910	1N4152
CR574	152-0141-02			SEMICOND DEVICE:SILICON,30V,150MA	07910	1N4152
CR579	152-0141-02			SEMICOND DEVICE:SILICON,30V,150MA	07910	1N4152
CR581	152-0141-02			SEMICOND DEVICE:SILICON,30V,150MA	07910	1N4152
CR611	152-0141-02			SEMICOND DEVICE:SILICON,30V,150MA	07910	1N4152
CR612	152-0141-02			SEMICOND DEVICE:SILICON,30V,150MA	07910	1N4152
CR616	152-0141-02			SEMICOND DEVICE:SILICON,30V,150MA	07910	1N4152
CR626	152-0141-02			SEMICOND DEVICE:SILICON,30V,150MA	07910	1N4152
CR627	152-0141-02			SEMICOND DEVICE:SILICON,30V,150MA	07910	1N4152
CR628	152-0141-02			SEMICOND DEVICE:SILICON,30V,150MA	07910	1N4152
CR629	152-0141-02			SEMICOND DEVICE:SILICON,30V,150MA	07910	1N4152
CR643	152-0141-02			SEMICOND DEVICE:SILICON,30V,150MA	07910	1N4152
CR653	152-0141-02			SEMICOND DEVICE:SILICON,30V,150MA	07910	1N4152
CR663	152-0141-02			SEMICOND DEVICE:SILICON,30V,150MA	07910	1N4152
CR664	152-0141-02			SEMICOND DEVICE:SILICON,30V,150MA	07910	1N4152
CR667	152-0141-02			SEMICOND DEVICE:SILICON,30V,150MA	07910	1N4152
CR686	152-0141-02			SEMICOND DEVICE:SILICON,30V,150MA	07910	1N4152
CR691	152-0141-02			SEMICOND DEVICE:SILICON,30V,150MA	07910	1N4152
CR692	152-0141-02			SEMICOND DEVICE:SILICON,30V,150MA	07910	1N4152
CR693	152-0141-02			SEMICOND DEVICE:SILICON,30V,150MA	07910	1N4152
CR702	152-0141-02			SEMICOND DEVICE:SILICON,30V,150MA	07910	1N4152
CR717	152-0141-02			SEMICOND DEVICE:SILICON,30V,150MA	07910	1N4152
CR727	152-0141-02			SEMICOND DEVICE:SILICON,30V,150MA	07910	1N4152
CR728	152-0141-02			SEMICOND DEVICE:SILICON,30V,150MA	07910	1N4152
CR752	152-0141-02			SEMICOND DEVICE:SILICON,30V,150MA	07910	1N4152
CR753	152-0141-02			SEMICOND DEVICE:SILICON,30V,150MA	07910	1N4152
CR754	152-0141-02			SEMICOND DEVICE:SILICON,30V,150MA	07910	1N4152
CR765	152-0141-02			SEMICOND DEVICE:SILICON,30V,150MA	07910	1N4152
CR766	152-0141-02			SEMICOND DEVICE:SILICON,30V,150MA	07910	1N4152
CR767	152-0141-02			SEMICOND DEVICE:SILICON,30V,150MA	07910	1N4152
CR769	152-0141-02			SEMICOND DEVICE:SILICON,30V,150MA	07910	1N4152
CR772	152-0141-02			SEMICOND DEVICE:SILICON,30V,150MA	07910	1N4152
CR785	152-0141-02			SEMICOND DEVICE:SILICON,30V,150MA	07910	1N4152
CR786	152-0141-02			SEMICOND DEVICE:SILICON,30V,150MA	07910	1N4152
CR787	152-0141-02			SEMICOND DEVICE:SILICON,30V,150MA	07910	1N4152
CR789	152-0141-02			SEMICOND DEVICE:SILICON,30V,150MA	07910	1N4152
CR792	152-0141-02			SEMICOND DEVICE:SILICON,30V,150MA	07910	1N4152
CR796	152-0141-02			SEMICOND DEVICE:SILICON,30V,150MA	07910	1N4152
CR797	152-0141-02			SEMICOND DEVICE:SILICON,30V,150MA	07910	1N4152
CR822	152-0141-02			SEMICOND DEVICE:SILICON,30V,150MA	07910	1N4152
CR823	152-0141-02			SEMICOND DEVICE:SILICON,30V,150MA	07910	1N4152
CR832	152-0141-02			SEMICOND DEVICE:SILICON,30V,150MA	07910	1N4152
CR833	152-0141-02			SEMICOND DEVICE:SILICON,30V,150MA	07910	1N4152

Ckt No.	Tektronix Part No.	Serial/Model No. Eff	Dscont	Name & Description	Mfr Code	Mfr Part Number
CR842	152-0141-02			SEMICOND DEVICE:SILICON,30V,150MA	07910	1N4152
CR843	152-0141-02			SEMICOND DEVICE:SILICON,30V,150MA	07910	1N4152
CR916	152-0141-02			SEMICOND DEVICE:SILICON,30V,150MA	07910	1N4152
CR930	152-0141-02			SEMICOND DEVICE:SILICON,30V,150MA	07910	1N4152
CR952	152-0141-02			SEMICOND DEVICE:SILICON,30V,150MA	07910	1N4152
CR982	152-0061-00			SEMICOND DEVICE:SILICON,175V,100MA	80009	152-0061-00
CR1003	152-0141-02			SEMICOND DEVICE:SILICON,30V,150MA	07910	1N4152
CR1011	152-0107-00			SEMICOND DEVICE:SILICON,400V,400MA	80009	152-0107-00
CR1012	152-0107-00			SEMICOND DEVICE:SILICON,400V,400MA	80009	152-0107-00
CR1013	152-0107-00			SEMICOND DEVICE:SILICON,400V,400MA	80009	152-0107-00
CR1016	152-0107-00			SEMICOND DEVICE:SILICON,400V,400MA	80009	152-0107-00
CR1061	152-0061-00			SEMICOND DEVICE:SILICON,175V,100MA	80009	152-0061-00
CR1062	152-0061-00			SEMICOND DEVICE:SILICON,175V,100MA	80009	152-0061-00
CR1065	152-0061-00			SEMICOND DEVICE:SILICON,175V,100MA	80009	152-0061-00
CR1067	152-0061-00			SEMICOND DEVICE:SILICON,175V,100MA	80009	152-0061-00
CR1069	152-0061-00			SEMICOND DEVICE:SILICON,175V,100MA	80009	152-0061-00
CR1122	152-0141-02			SEMICOND DEVICE:SILICON,30V,150MA	07910	1N4152
CR1124	152-0141-02			SEMICOND DEVICE:SILICON,30V,150MA	07910	1N4152
CR1134	152-0141-02			SEMICOND DEVICE:SILICON,30V,150MA	07910	1N4152
CR1136	152-0141-02			SEMICOND DEVICE:SILICON,30V,150MA	07910	1N4152
CR1137	152-0141-02			SEMICOND DEVICE:SILICON,30V,150MA	07910	1N4152
CR1138	152-0141-02			SEMICOND DEVICE:SILICON,30V,150MA	07910	1N4152
CR1151	152-0141-02			SEMICOND DEVICE:SILICON,30V,150MA	07910	1N4152
CR1162	152-0141-02			SEMICOND DEVICE:SILICON,30V,150MA	07910	1N4152
CR1163	152-0141-02			SEMICOND DEVICE:SILICON,30V,150MA	07910	1N4152
CR1171	152-0141-02			SEMICOND DEVICE:SILICON,30V,150MA	07910	1N4152
CR1172	152-0141-02			SEMICOND DEVICE:SILICON,30V,150MA	07910	1N4152
CR1173	152-0141-02			SEMICOND DEVICE:SILICON,30V,150MA	07910	1N4152
CR1203	152-0141-02			SEMICOND DEVICE:SILICON,30V,150MA	07910	1N4152
CR1204	152-0141-02			SEMICOND DEVICE:SILICON,30V,150MA	07910	1N4152
CR1244	152-0141-02			SEMICOND DEVICE:SILICON,30V,150MA	07910	1N4152
CR1248	152-0141-02			SEMICOND DEVICE:SILICON,30V,150MA	07910	1N4152
CR1321	152-0141-02			SEMICOND DEVICE:SILICON,30V,150MA	07910	1N4152
CR1322	152-0141-02			SEMICOND DEVICE:SILICON,30V,150MA	07910	1N4152
CR1351	152-0141-02			SEMICOND DEVICE:SILICON,30V,150MA	07910	1N4152
CR1352	152-0141-02			SEMICOND DEVICE:SILICON,30V,150MA	07910	1N4152
CR1522	152-0141-02			SEMICOND DEVICE:SILICON,30V,150MA	07910	1N4152
CR1541	152-0141-02			SEMICOND DEVICE:SILICON,30V,150MA	07910	1N4152
CR1542	152-0141-02			SEMICOND DEVICE:SILICON,30V,150MA	07910	1N4152
CR1552	152-0141-02			SEMICOND DEVICE:SILICON,30V,150MA	07910	1N4152
CR1571	152-0141-02			SEMICOND DEVICE:SILICON,30V,150MA	07910	1N4152
CR1577	152-0141-02			SEMICOND DEVICE:SILICON,30V,150MA	07910	1N4152
CR1579	152-0141-02			SEMICOND DEVICE:SILICON,30V,150MA	07910	1N4152
CR1624	152-0107-03			SEMICOND DEVICE:SILICON,375V,400MA,SEL	80009	152-0107-03
CR1667	152-0107-03			SEMICOND DEVICE:SILICON,375V,400MA,SEL	80009	152-0107-03
CR1677	152-0107-03			SEMICOND DEVICE:SILICON,375V,400MA,SEL	80009	152-0107-03
CR1683	152-0107-03			SEMICOND DEVICE:SILICON,375V,400MA,SEL	80009	152-0107-03
CR1714	152-0141-02			SEMICOND DEVICE:SILICON,30V,150MA	07910	1N4152
CR1717	152-0141-02			SEMICOND DEVICE:SILICON.30V,150MA	07910	1N4152
CR1718	152-0141-02			SEMICOND DEVICE:SILICON,30V,150MA	07910	1N4152
CR1719	152-0141-02			SEMICOND DEVICE:SILICON,30V,150MA	07910	1N4152
CR1725	152-0141-02			SEMICOND DEVICE:SILICON,30V,150MA	07910	1N4152

Ckt No.	Tektronix Part No.	Serial/Model No. Eff	Dscont	Name & Description	Mfr Code	Mfr Part Number
CR1726	152-0141-02			SEMICOND DEVICE:SILICON,30V,150MA	07910	1N4152
CR1727	152-0141-02			SEMICOND DEVICE:SILICON,30V,150MA	07910	1N4152
CR1729	152-0141-02			SEMICOND DEVICE:SILICON,30V,150MA	07910	1N4152
CR1746	152-0141-02			SEMICOND DEVICE:SILICON,30V,150MA	07910	1N4152
CR1747	152-0141-02			SEMICOND DEVICE:SILICON,30V,150MA	07910	1N4152
CR1748	152-0141-02			SEMICOND DEVICE:SILICON,30V,150MA	07910	1N4152
CR1749	152-0141-02			SEMICOND DEVICE:SILICON,30V,150MA	07910	1N4152
CR1751	152-0141-02			SEMICOND DEVICE:SILICON.30V,150MA	07910	1N4152
CR1776	152-0141-02			SEMICOND DEVICE:SILICON,30V,150MA	07910	1N4152
CR1793	152-0141-02			SEMICOND DEVICE:SILICON,30V,150MA	07910	1N4152
CR1812	152-0141-02			SEMICOND DEVICE:SILICON,30V,150MA	07910	1N4152
CR1910	152-0668-00			SEMICOND DEVICE:SILICON,200V,6A	14936	KBPC802
CR1911	152-0668-00			SEMICOND DEVICE:SILICON,200V,6A	14936	KBPC802
CR1916	152-0107-03			SEMICOND DEVICE:SILICON,375V,400MA,SEL	80009	152-0107-03
CR1926	152-0141-02			SEMICOND DEVICE:SILICON,30V,150MA	07910	1N4152
CR1945	152-0423-00			SEMICOND DEVICE:SILICON,400V,3A	04713	1N5000
CR1987	152-0141-02			SEMICOND DEVICE:SILICON,30V,150MA	07910	1N4152
CR1996	152-0141-02			SEMICOND DEVICE:SILICON,30V,150MA	07910	1N4152
CR2041	152-0141-02			SEMICOND DEVICE:SILICON,30V,150MA	07910	1N4152
CR2063	152-0075-00			SEMICOND DEVICE:GE,25V,40MA	80009	152-0075-00
CR2071	152-0107-03			SEMICOND DEVICE:SILICON,375V,400MA,SEL	80009	152-0107-03
CR2072	152-0107-03			SEMICOND DEVICE:SILICON,375V,400MA,SEL	80009	152-0107-03
CR2075	152-0107-03			SEMICOND DEVICE:SILICON,375V,400MA,SEL	80009	152-0107-03
CR2076	152-0107-03			SEMICOND DEVICE:SILICON,375V,400MA,SEL	80009	152-0107-03
CR2079	152-0066-01			SEMICOND DEVICE:SILICON,400V,1A	80009	152-0066-01
CR2080	152-0066-01			SEMICOND DEVICE:SILICON,400V,1A	80009	152-0066-01
CR2085	152-0066-01			SEMICOND DEVICE:SILICON,400V,1A	80009	152-0066-01
CR2086	152-0066-01			SEMICOND DEVICE:SILICON,400V,1A	80009	152-0066-01
CR2091	152-0107-03			SEMICOND DEVICE:SILICON,375V,400MA,SEL	80009	152-0107-03
CR2092	152-0107-03			SEMICOND DEVICE:SILICON,375V,400MA,SEL	80009	152-0107-03
CR2095	152-0107-03			SEMICOND DEVICE:SILICON,375V,400MA,SEL	80009	152-0107-03
CR2096	152-0107-03			SEMICOND DEVICE:SILICON,375V,400MA,SEL	80009	152-0107-03
CR2121	152-0170-00			SEMICOND DEVICE:SILICON,1500V,10UA	80009	152-0170-00
CR2122	152-0170-00			SEMICOND DEVICE:SILICON,1500V,10UA	80009	152-0170-00
CR2123	152-0170-00			SEMICOND DEVICE:SILICON,1500V,10UA	80009	152-0170-00
CR2124	152-0170-00			SEMICOND DEVICE:SILICON,1500V,10UA	80009	152-0170-00
CR2125	152-0170-00			SEMICOND DEVICE:SILICON,1500V,10UA	80009	152-0170-00
CR2126	152-0170-00			SEMICOND DEVICE:SILICON,1500V,10UA	80009	152-0170-00
CR2143	152-0141-02			SEMICOND DEVICE:SILICON,30V,150MA	07910	1N4152
CR2146	152-0141-02			SEMICOND DEVICE:SILICON,30V,150MA	07910	1N4152
CR2151	152-0141-02			SEMICOND DEVICE:SILICON,30V,150MA	07910	1N4152
CR2152	152-0141-02			SEMICOND DEVICE:SILICON,30V,150MA	07910	1N4152
CR2153	152-0141-02			SEMICOND DEVICE:SILICON,30V,150MA	07910	1N4152
CR2154	152-0141-02			SEMICOND DEVICE:SILICON,30V,150MA	07910	1N4152
CR2156	152-0141-02			SEMICOND DEVICE:SILICON,30V,150MA	07910	1N4152
CR2161	152-0107-03			SEMICOND DEVICE:SILICON,375V,400MA,SEL	80009	152-0107-03
CR2163	152-0107-03			SEMICOND DEVICE:SILICON,375V,400MA,SEL	80009	152-0107-03
DS131	150-0173-00			LAMP,GLOW:LKG LESS THAN 1 NA	08806	C2A-T
DS141	150-0173-00			LAMP,GLOW:LKG LESS THAN 1 NA	08806	C2A-T
DS161	150-0173-00			LAMP,GLOW:LKG LESS THAN 1 NA	08806	C2A-T
DS470	150-1033-00			LAMP,LED:YELLOW,2.2V	80009	150-1033-00
DS1598	150-0123-01			LAMP,CARTRIDGE:YELLOW LENS,14V,23MA	18788	T300-6-M631
DS1648	150-1031-00			LAMP,LED:RED,20V	53184	XC209R
DS1649	150-1031-00			LAMP,LED:RED,20V	53184	XC209R

Ckt No.	Tektronix Part No.	Serial/Model No. Eff	Dscont	Name & Description	Mfr Code	Mfr Part Number
DS1725	150-1029-00			LAMP,LED:2.0V,GREEN	53184	XC209G
DS1727	150-1031-00			LAMP,LED:RED,20V	53184	XC209R
F1982[1]						
F1983[1]						
J130	131-1378-00			CONNECTOR,RCPT,:5 CONTACT	02660	MS3102A-14S-5S
J600	136-0461-00			SKT,PL-IN ELEK:	22526	65059-001
J626	131-1376-00			CONNECTOR,RCPT,:4 CONTACT	81312	M43-LRN
J816	131-1375-00			CONN,RCPT,ELEC:FLANGE MT,6 CONT,FEMALE	02660	MS3102A 143-6S
J1401	131-1863-00			JACK,TELEPHONE:STD 0.25,5 COND DBL-CL CKT	82389	114B
J1461	131-1863-00			JACK,TELEPHONE:STD 0.25,5 COND DBL-CL CKT	82389	114B
J1596	131-1862-00			JACK TELEPHONE:	82389	112B
J1597	131-1862-00			JACK,TELEPHONE:	82389	112B
J1598	131-1862-00			JACK,TELEPHONE:	82389	112B
K1913	148-0112-00			RELAY,ARMATURE:SPDT,6VDC,5A	94696	W65RPCX-1
L162	108-0888-00			COIL,RF:10MH	80009	108-0888-00
L409	108-0888-00			COIL,RF:10MH	80009	108-0888-00
L1690[2]	119-0950-00			COIL,TUBE DEFL:CRT YOKE	80009	119-0950-00
LS1759	119-0716-01			LOUD SPEAKER,PM:W/W CABLE	80009	119-0716-01
LS2039	150-1049-00			LT EMITTING DIO:RED/GREEN	05464	232 RG
P1742	131-0993-00			LINK,TERM.CONNE:2 WIRE BLACK	00779	530153-2
P1748	131-2083-00			BUS CONDUCTOR:2.26 AWG,1.5 L	80009	131-2083-00
P1905	131-1703-00			CONN,PLUG,ELEC:PWR,MALE,125V,15A	74545	8215-C
P2141	136-0551-00			SOCKET,PLUG-IN:CRT	80009	136-0551-00
P2400	131-2073-00			TERM SET,PIN:17 MALE CONT,RIGHT ANGLE	22526	65525-117
P2400	131-2072-00			TERM SET,PIN:17 MALE CONT,RIGHT ANGLE	22526	65522-117
Q116	151-0302-00			TRANSISTOR:SILICON,NPN	04713	2N2222A
Q117	151-0302-00			TRANSISTOR:SILICON,NPN	04713	2N2222A
Q139A,B	151-1049-00			TRANSISTOR:SILICON,JFE,N-CHANNEL,DUAL	80009	151-1049-00
Q154	151-0190-00			TRANSISTOR:SILICON,NPN	80009	151-0190-00
Q207A,B	151-1049-00			TRANSISTOR:SILICON,JFE,N-CHANNEL,DUAL	80009	151-1049-00
Q236	151-1004-00			TRANSISTOR:SILICON,JFE,N-CHANNEL	80009	151-1004-00
Q252	151-0190-00			TRANSISTOR:SILICON,NPN	80009	151-0190-00
Q255	151-0188-00			TRANSISTOR:SILICON,PNP	01295	2N3906
Q291	151-0302-00			TRANSISTOR:SILICON,NPN	04713	2N2222A
Q297	151-0301-00			TRANSISTOR:SILICON,PNP	04713	2N2907A
Q333	151-1004-00			TRANSISTOR:SILICON,JFE,N-CHANNEL	80009	151-1004-00
Q334	151-0188-00			TRANSISTOR:SILICON,PNP	01295	2N3906
Q341	151-0188-00			TRANSISTOR:SILICON,PNP	01295	2N3906
Q360	151-0188-00			TRANSISTOR:SILICON,PNP	01295	2N3906
Q363	151-0188-00			TRANSISTOR:SILICON,PNP	01295	2N3906
Q367	151-0342-00			TRANSISTOR:SILICON,PNP	80009	151-0342-00
Q373	151-0342-00			TRANSISTOR:SILICON,PNP	80009	151-0342-00
Q381	151-0188-00			TRANSISTOR:SILICON,PNP	01295	2N3906
Q384	151-0508-00			TRANSISTOR:SILICON,NPN,UNIJUNCTION	03508	2N6027
Q392	151-0190-00			TRANSISTOR:SILICON,NPN	80009	151-0190-00
Q406	151-0190-00			TRANSISTOR:SILICON,NPN	80009	151-0190-00
Q461A,B	151-1049-00			TRANSISTOR:SILICON,JFE,N-CHANNEL,DUAL	80009	151-1049-00
Q474	151-1004-00			TRANSISTOR:SILICON,JFE,N-CHANNEL	80009	151-1004-00
Q491	151-0302-00			TRANSISTOR:SILICON,NPN	04713	2N2222A
Q497	151-0301-00			TRANSISTOR:SILICON,PNP	04713	2N2907A

[1]Furnished as a unit with 119-0443-01.
[2]Furnished as a unit with RT1690.

Ckt No.	Tektronix Part No.	Serial/Model No. Eff	Dscont	Name & Description	Mfr Code	Mfr Part Number
Q533	151-1004-00			TRANSISTOR:SILICON,JFE,N-CHANNEL	80009	151-1004-00
Q534	151-0188-00			TRANSISTOR:SILICON,PNP	01295	2N3906
Q541	151-0188-00			TRANSISTOR:SILICON,PNP	01295	2N3906
Q560	151-0188-00			TRANSISTOR:SILICON,PNP	01295	2N3906
Q563	151-0190-00			TRANSISTOR:SILICON,NPN	80009	151-0190-00
Q567	151-0188-00			TRANSISTOR:SILICON,PNP	01295	2N3906
Q574	151-0188-00			TRANSISTOR:SILICON,PNP	01295	2N3906
Q582	151-0190-00			TRANSISTOR:SILICON,NPN	80009	151-0190-00
Q666	151-0224-00			TRANSISTOR:SILICON,NPN	07263	2N3904
Q767	151-0224-00			TRANSISTOR:SILICON,NPN	07263	2N3904
Q787	151-0188-00			TRANSISTOR:SILICON,PNP	01295	2N3906
Q844	151-0224-00			TRANSISTOR:SILICON,NPN	07263	2N3904
Q955	151-0444-00			TRANSISTOR:SILICON,NPN	80009	151-0444-00
Q956	151-0443-00			TRANSISTOR:SILICON,PNP	04713	MPS-A92
Q958	151-0444-00			TRANSISTOR:SILICON,NPN	80009	151-0444-00
Q959	151-0443-00			TRANSISTOR:SILICON,PNP	04713	MPS-A92
Q961	151-0444-00			TRANSISTOR:SILICON,NPN	80009	151-0444-00
Q962	151-0443-00			TRANSISTOR:SILICON,PNP	04713	MPS-A92
Q964	151-0444-00			TRANSISTOR:SILICON,NPN	80009	151-0444-00
Q965	151-0443-00			TRANSISTOR:SILICON,PNP	04713	MPS-A92
Q979	151-0190-00			TRANSISTOR:SILICON,NPN	80009	151-0190-00
Q982	151-0347-00			TRANSISTOR:SILICON,NPN	80009	151-0347-00
Q990	151-0188-00			TRANSISTOR:SILICON,PNP	01295	2N3906
Q992	151-0188-00			TRANSISTOR:SILICON,PNP	01295	2N3906
Q1003	151-0301-00			TRANSISTOR:SILICON,PNP	04713	2N2907A
Q1031	151-0188-00			TRANSISTOR:SILICON,PNP	01295	2N3906
Q1032	151-0190-00			TRANSISTOR:SILICON,NPN	80009	151-0190-00
Q1033	151-0190-00			TRANSISTOR:SILICON,NPN	80009	151-0190-00
Q1043	151-0188-00			TRANSISTOR:SILICON,PNP	01295	2N3906
Q1061	151-0347-00			TRANSISTOR:SILICON,NPN	80009	151-0347-00
Q1062	151-0347-00			TRANSISTOR:SILICON,NPN	80009	151-0347-00
Q1065	151-0347-00			TRANSISTOR:SILICON,NPN	80009	151-0347-00
Q1067	151-0347-00			TRANSISTOR:SILICON,NPN	80009	151-0347-00
Q1069	151-0347-00			TRANSISTOR:SILICON,NPN	80009	151-0347-00
Q1152	151-0508-00			TRANSISTOR:SILICON,NPN,UNIJUNCTION	03508	2N6027
Q1551	151-0302-00			TRANSISTOR:SILICON,NPN	04713	2N2222A
Q1571	151-0188-00			TRANSISTOR:SILICON,PNP	01295	2N3906
Q1576	151-0188-00			TRANSISTOR:SILICON,PNP	01295	2N3906
Q1577	151-0301-00			TRANSISTOR:SILICON,PNP	04713	2N2907A
Q1594	151-0302-00			TRANSISTOR:SILICON,NPN	04713	2N2222A
Q1613	151-0190-00			TRANSISTOR:SILICON,NPN	80009	151-0190-00
Q1617	151-0190-00			TRANSISTOR:SILICON,NPN	80009	151-0190-00
Q1621	151-0188-00			TRANSISTOR:SILICON,PNP	01295	2N3906
Q1642	151-0188-00			TRANSISTOR:SILICON,PNP	01295	2N3906
Q1656	151-0190-00			TRANSISTOR:SILICON,NPN	80009	151-0190-00
Q1657	151-0190-00			TRANSISTOR:SILICON,NPN	80009	151-0190-00
Q1662	151-0347-00			TRANSISTOR:SILICON,NPN	80009	151-0347-00
Q1663	151-0347-00			TRANSISTOR:SILICON,NPN	80009	151-0347-00
Q1664	151-0301-00			TRANSISTOR:SILICON,PNP	04713	2N2907A
Q1666	151-0350-00			TRANSISTOR:SILICON,PNP	80009	151-0350-00
Q1667	151-0407-00			TRANSISTOR:SILICON,NPN	80009	151-0407-00

Ckt No.	Tektronix Part No.	Serial/Model No. Eff	Dscont	Name & Description	Mfr Code	Mfr Part Number
Q1672	151-0350-00			TRANSISTOR:SILICON,PNP	80009	151-0350-00
Q1673	151-0350-00			TRANSISTOR:SILICON,PNP	80009	151-0350-00
Q1674	151-0302-00			TRANSISTOR:SILICON,NPN	04713	2N2222A
Q1676	151-0347-00			TRANSISTOR:SILICON,NPN	80009	151-0347-00
Q1677	151-0406-00			TRANSISTOR:SILICON,PNP	80009	151-0406-00
Q1713	151-0188-00			TRANSISTOR:SILICON,PNP	01295	2N3906
Q1714	151-0301-00			TRANSISTOR:SILICON,PNP	04713	2N2907A
Q1758	151-0190-00			TRANSISTOR:SILICON,NPN	80009	151-0190-00
Q1759	151-0188-00			TRANSISTOR:SILICON,PNP	01295	2N3906
Q1776	151-0188-00			TRANSISTOR:SILICON,PNP	01295	2N3906
Q1793	151-0188-00			TRANSISTOR:SILICON,PNP	01295	2N3906
Q1812	151-0190-00			TRANSISTOR:SILICON,NPN	80009	151-0190-00
Q1842	151-0190-00			TRANSISTOR:SILICON,NPN	80009	151-0190-00
Q1843	151-0188-00			TRANSISTOR:SILICON,PNP	01295	2N3906
Q1852	151-0190-00			TRANSISTOR:SILICON,NPN	80009	151-0190-00
Q1853	151-0188-00			TRANSISTOR:SILICON,PNP	01295	2N3906
Q1936	151-0190-00			TRANSISTOR:SILICON,NPN	80009	151-0190-00
Q1939	151-0188-00			TRANSISTOR:SILICON,PNP	01295	2N3906
Q1944	151-0134-00			TRANSISTOR:SILICON,PNP	80009	151-0134-00
Q1945	151-0373-00			TRANSISTOR:SILICON,PNP	80009	151-0373-00
Q1966	151-0190-00			TRANSISTOR:SILICON,NPN	80009	151-0190-00
Q1967	151-0301-00			TRANSISTOR:SILICON,PNP	04713	2N2907A
Q1972	151-0477-00			TRANSISTOR:SILICON,NPN	01295	TIP35A
Q1973	151-0477-00			TRANSISTOR:SILICON,NPN	01295	TIP35A
Q1993	151-0302-00			TRANSISTOR:SILICON,NPN	04713	2N2222A
Q2021	151-0301-00			TRANSISTOR:SILICON,PNP	04713	2N2907A
Q2029	151-0301-00			TRANSISTOR:SILICON,PNP	04713	2N2907A
Q2049	151-0190-00			TRANSISTOR:SILICON,NPN	80009	151-0190-00
Q2051	151-0190-00			TRANSISTOR:SILICON,NPN	80009	151-0190-00
Q2053	151-0190-00			TRANSISTOR:SILICON,NPN	80009	151-0190-00
Q2142	151-0350-00			TRANSISTOR:SILICON,PNP	80009	151-0350-00
Q2146	151-0188-00			TRANSISTOR:SILICON,PNP	01295	2N3906
R112	315-0222-00			RES.,FXD,CMPSN:2,2K OHM,5%,0.25W	01121	CB2225
R117	315-0101-00			RES.,FXD,CMPSN:100 OHM,5%,0.25W	01121	CB1015
R131	315-0103-00			RES.,FXD,CMPSN:10K OHM,5%,0.25W	01121	CB1035
R135	314-0011-00			RES.,FXD,FILM:10G OHM,30%,0.5W	75042	GBT 1/2 1000730%
R136	321-0510-00			RES.,FXD,FILM:2M OHM,1%,0.125W	91637	HFF188G20003F
R139	321-0306-00			RES.,FXD,FILM:15K OHM,1%,0.125W	91637	MFF1816G15001F
R146	315-0203-00			RES.,FXD.CMPSN:20K OHM,5%,0.25W	01121	CB2035
R147	315-0103-00			RES.,FXD,CMPSN:10K OHM,5%,0.25W	01121	CB1035
R151	321-0378-00			RES.,FXD,FILM:84.5K OHM,1%.0.125W	91637	MFF1816G84501F
R152	322-0222-00			RES.,FXD,FILM:2K OHM,1%,0.25W	75042	CEBT0-2001F
R153	321-0289-00			RES.,FXD,FILM:10K OHM,1%,0.125W	91637	MFF1816G10001F
R156	321-0318-00			RES.,FXD,FILM:20K OHM,1%,0.125W	91637	MFF1816G20001F
R157	321-0289-00			RES.,FXD,FILM:10K OHM,1%,0.125W	91637	MFF1816G10001F
R158	321-0378-00			RES.,FXD,FILM:84.5K OHM,1%,0.125W	91637	MFF1816G84501F
R162	315-0103-00			RES.,FXD,CMPSN:10K OHM,5%,0.25W	01121	CB1035
R165	314-0011-00			RES.,FXD,FILM:10G OHM,30%,0.5W	75042	GBT 1/2 1000730%
R166	321-0510-00			RES.,FXD,FILM:2M OHM,1%,0.125W	91637	HFF188G20003F
R169	321-0306-00			RES.,FXD,FILM:15K OHM,1%,0.125W	91637	MFF1816G15001F
R179	323-0085-00			RES.,FXD,FILM:75 OHM,1%,0.50W	75042	CECT0-75R00F
R180	311-1244-00			RES.,VAR,NONWIR:100 OHM,10%,0.50W	32997	3386X-T07-101
R181	322-0193-00			RES.,FXD,FILM:1K OHM,1%,0.25W	75042	CEBT0-1001F
R183	315-0163-00			RES.,FXD,CMPSN:16K OHM,5%,0.25W	01121	CB1635

Ckt No.	Tektronix Part No.	Serial/Model No. Eff	Dscont	Name & Description	Mfr Code	Mfr Part Number
R186	321-0239-00			RES.,FXD,FILM:3.01K OHM,1%,0.125W	91637	MFF1816G30100F
R187	321-0274-00			RES.,FXD,FILM:6.98K OHM,1%,0.125W	91637	MFF1816G69800F
R194	321-0327-00			RES.,FXD,FILM:24.9K OHM,1%,0.125W	91637	MFF1816G24901F
R195	311-1198-00			RES.,VAR,NONWIR:20K OHM,20%,0.5W	80294	3389H
R197	321-0194-00			RES.,FXD,FILM:1.02K OHM,1%,0.125W	91637	MFF1816G10200F
R199	315-0753-00			RES.,FXD,CMPSN:75K OHM,5%,0.25W	01121	CB7535
R200	311-1860-00			RES.,VAR,NONWIR:10K OHM,0.50W	32997	3299X-R27-103
R203	315-0335-00			RES.,FXD,CMPSN:3.3M OHM,5%,0.25W	01121	CB3355
R204	315-0364-00			RES.,FXD,CMPSN:360K OHM,5%,0.25W	01121	CB3645
R206	315-0103-00			RES.,FXD,CMPSN:10K OHM,5%,0.25W	01121	CB1035
R207	321-0222-00			RES.,FXD,FILM:2K OHM,1%,0.125W	91637	MFF1816G20000F
R208	321-0222-00			RES.,FXD,FILM:2K OHM,1%,0.125W	91637	MFF1816G20000F
R210	311-1524-00			RES.,VAR,NONWIR:20K OHM,10%,1W	01121	11M338
R221	315-0513-00			RES.,FXD,CMPSN:51K OHM,5%,0.25W	01121	CB5135
R220	315-0512-00			RES.,FXD,CMPSN:5.1K OHM,5%,0.25W	01121	CB5125
R223	315-0433-00			RES.,FXD,CMPSN:43K OHM,5%,0.25W	01121	CB4335
R224	315-0513-00			RES.,FXD,CMPSN:51K OHM,5%,0.25W	01121	CB5135
R226	315-0103-00			RES.,FXD,CMPSN:10K OHM,5%,0.25W	01121	CB1035
R229	315-0103-00			RES.,FXD,CMPSN:10K OHM,5%,0.25W	01121	CB1035
R231	315-0513-00			RES.,FXD,CMPSN:51K OHM,5%,0.25W	01121	CB5135
R236	315-0473-00			RES.,FXD,CMPSN:47K OHM,5%,0.25W	01121	CB4735
R237	315-0204-00			RES.,FXD,CMPSN:200K OHM,5%,0.25W	01121	CB2045
R238	315-0103-00			RES.,FXD,CMPSN:10K OHM,5%,0.25W	01121	CB1035
R239	315-0513-00			RES.,FXD,CMPSN:51K OHM,5%,0.25W	01121	CB5135
R243	315-0103-00			RES.,FXD,CMPSN:10K OHM.5%,0.25W	01121	CB1035
R244	315-0512-00			RES.,FXD,CMPSN:5.1K OHM,5%,0.25W	01121	CB5125
R246	315-0103-00			RES.,FXD,CMPSN:10K OHM,5%,0.25W	01121	CB1035
R247	315-0103-00			RES.,FXD,CMPSN:10K OHM,5%,0.25W	01121	CB1035
R249	315-0103-00			RES.,FXD,CMPSN:10K OHM,5%,0.25W	01121	CB1035
R252	315-0563-00			RES.,FXD,CMPSN:56K OHM,5%,0.25W	01121	CB5635
R253	315-0103-00			RES.,FXD,CMPSN:10K OHM,5%,0.25W	01121	CB1035
R256	315-0153-00			RES.,FXD,CMPSN:15K OHM,5%,0.25W	01121	CB1535
R291	315-0103-00			RES.,FXD,CMPSN:10K OHM,5%,0.25W	01121	CB1035
R296	321-0289-00			RES.,FXD,FILM:10K OHM,1%,0.125W	91637	MFF1816G10001F
R297	321-0289-00			RES.,FXD,FILM:10K OHM,1%,0.125W	91637	MFF1816G10001F
R309	315-0203-00			RES.,FXD,CMPSN:20K OHM,5%,0.25W	01121	CB2035
R311	315-0105-00			RES.,FXD,CMPSN:1M OHM,5%,0.25W	01121	CB1055
R312	321-0481-00			RES.,FXD,FILM:1M OHM,1%,0.125W	91637	MFF1816G10003F
R314	315-0104-00			RES.,FXD,CMPSN:100K OHM,5%,0.25W	01121	CB1045
R316	315-0104-00			RES.,FXD,CMPSN:100K OHM,5%,0.25W	01121	CB1045
R317	315-0103-00			RES.,FXD,CMPSN:10K OHM,5%,0.25W	01121	CB1035
R321	315-0163-00			RES.,FXD,CMPSN:16K OHM,5%,0.25W	01121	CB1635
R323	315-0104-00			RES.,FXD,CMPSN:100K OHM,5%,0.25W	01121	CB1045
R324	315-0102-00			RES.,FXD,CMPSN:1K OHM.5%,0.25W	01121	CB1025
R326	315-0104-00			RES.,FXD,CMPSN:100K OHM,5%.0.25W	01121	CB1045
R327	315-0104-00			RES.,FXD,CMPSN:100K OHM,5%,0.25W	01121	CB1045
R329	315-0333-00			RES.,FXD,CMPSN:33K OHM,5%,0.25W	01121	CB3335
R331	315-0185-00			RES.,FXD,CMPSN:1.8M OHM,5%,0.25W	01121	CB1855
R333	315-0103-00			RES.,FXD,CMPSN:10K OHM,5%,0.25W	01121	CB1035
R336	315-0683-00			RES.,FXD,CMPSN:68K OHM,5%,0.25W	01121	CB6835
R337	315-0513-00			RES.,FXD,CMPSN:51K OHM,5%,0.25W	01121	CB5135
R341	315-0393-00			RES.,FXD,CMPSN:39K OHM,5%,0.25W	01121	CB3935
R342	315-0303-00			RES.,FXD,CMPSN:30K OHM,5%.0.25W	01121	CB3035

Ckt No.	Tektronix Part No.	Serial/Model No. Eff	Dscont	Name & Description	Mfr Code	Mfr Part Number
R343	315-0106-00			RES.,FXD,CMPSN:10M OHM,5%,0.25W	01121	CB1065
R346	315-0164-00			RES.,FXD,CMPSN:160K OHM,5%,0.25W	01121	CB1645
R349	315-0103-00			RES.,FXD,CMPSN:10K OHM,5%,0.25W	01121	CB1035
R356	315-0104-00			RES.,FXD,CMPSN:100K OHM,5%,0.25W	01121	CB1045
R357	315-0622-00			RES.,FXD,CMPSN:6.2K OHM,5%,0.25W	01121	CB6225
R358	315-0102-00			RES.,FXD,CMPSN:1K OHM,5%,0.25W	01121	CB1025
R359	315-0104-00			RES.,FXD,CMPSN:100K OHM,5%,0.25W	01121	CB1045
R361	315-0104-00			RES.,FXD,CMPSN:100K OHM,5%,0.25W	01121	CB1045
R363	315-0105-00			RES.,FXD,CMPSN:1M OHM,5%.0.25W	01121	CB1055
R366	315-0564-00			RES.,FXD,CMPSN:560K OHM,5%,0.25W	01121	CB5645
R367	315-0364-00			RES.,FXD,CMPSN:360K OHM,5%,0.25W	01121	CB3645
R371	315-0684-00			RES.,FXD,CMPSN:680K OHM,5%,0.25W	01121	CB6845
R373	315-0103-00			RES.,FXD,CMPSN:10K OHM,5%,0.25W	01121	CB1035
R376	315-0105-00			RES.,FXD,CMPSN:1M OHM.5%,0.25W	01121	CB1055
R378	315-0102-00			RES.,FXD,CMPSN:1K OHM,5%,0.25W	01121	CB1025
R379	315-0125-00			RES.,FXD,CMPSN:1.2M OHM,5%,0.25W	01121	CB1255
R381	315-0302-00			RES.,FXD,CMPSN:3K OHM,5%,0.25W	01121	CB3025
R382	315-0392-00			RES.,FXD,CMPSN:3.9K OHM,5%,0.25W	01121	CB3925
R383	315-0113-00			RES.,FXD,CMPSN:11K OHM,5%,0.25W	01121	CB1135
R384	315-0562-00			RES.,FXD,CMPSN:5.6K OHM,5%,0.25W	01121	CB5625
R387	315-0164-00			RES.,FXD,CMPSN:160K OHM,5%,0.25W	01121	CB1645
R391	315-0334-00			RES.,FXD,CMPSN:330K OHM,5%,0.25W	01121	CB3345
R392	315-0153-00			RES.,FXD,CMPSN:15K OHM,5%,0.25W	01121	CB1535
R405	315-0153-00			RES.,FXD,CMPSN:15K OHM,5%,0.25W	01121	CB1535
R406	315-0104-00			RES.,FXD,CMPSN:100K OHM,5%,0.25W	01121	CB1045
R407	321-0385-00			RES.,FXD,FILM:100K OHM,1%,0.125W	91637	MFF1816G10002F
R413	321-0289-00			RES.,FXD,FILM:10K OHM,1%,0.125W	91637	MFF1816G10001F
R414	321-0289-00			RES.,FXD.FILM:10K OHM,1%,0.125W	91637	MFF1816G10001F
R423	321-0260-00			RES.,FXD,FILM:4.99K OHM,1%,0.125W	91637	MFF1816G49900F
R424	321-0297-00			RES.,FXD,FILM:12.1K OHM,1%,0.125W	91637	MFF1816G12101F
R425	311-1248-00			RES.,VAR,NONWIR:500 OHM,10%,0.50W	73138	72X-23-0-501K
R426	321-0164-00			RES.,FXD.FILM:499 OHM,1%,0.125W	91637	MFF1816G499R0F
R427	315-0103-00			RES.,FXD,CMPSN:10K OHM,5%,0.25W	01121	CB1035
R429	315-0104-00			RES.,FXD,CMPSN:100K OHM,5%,0.25W	01121	CB1045
R431	321-0160-00			RES.,FXD,FILM:453 OHM,1%,0.125W	91637	MFF1816G453R0F
R432	321-0160-00			RES.,FXD,FILM:453 OHM,1%,0.125W	91637	MFF1816G453R0F
R433	321-0268-00			RES.,FXD,FILM:6.04K OHM,1%,0.125W	91637	MFF1816G60400F
R436	321-0257-00			RES.,FXD,FILM:4.64K OHM,1%,0.125W	91637	MFF1816G46400F
R437	321-0257-00			RES.,FXD,FILM:4.64K OHM,1%,0.125W	91637	MFF1816G46400F
R438	321-0385-00			RES.,FXD,FILM:100K OHM,1%,0.125W	91637	MFF1816G10002F
R439	321-0385-00			RES.,FXD,FILM:100K OHM,1%,0.125W	91637	MFF1816G10002F
R441	315-0163-00			RES.,FXD,CMPSN:16K OHM,5%,0.25W	01121	CB1635
R446	321-0280-00			RES.,FXD,FILM:8.06K OHM,1%,0.125W	91637	MFF1816G80600F
R447	321-0222-00			RES.,FXD,FILM:2K OHM,1%,0.125W	91637	MFF1816G20000F
R449	321-0360-00			RES.,FXD,FILM:54.9K OHM,1%,0.125W	91637	MFF1816G54901F
R450	311-1246-00			RES.,VAR,NONWIR:50K OHM.10%,0.50W	02111	63X-503-T602
R452	321-0194-00			RES.,FXD,FILM:1.02K OHM,1%,0.125W	91637	MFF1816G10200F
R454	315-0753-00			RES.,FXD,CMPSN:75K OHM,5%,0.25W	01121	CB7535
R455	311-1860-00			RES.,VAR,NONWIR:10K OHM,0.50W	32997	3299X-R27-103
R461	321-0222-00			RES.,FXD,FILM:2K OHM,1%,0.125W	91637	MFF1816G20000F
R462	321-0222-00			RES.,FXD,FILM:2K OHM,1%,0.125W	91637	MFF1816G20000F
R464	315-0103-00			RES.,FXD,CMPSN:10K OHM,5%,0.25W	01121	CB1035
R465	315-0103-00			RES.,FXD,CMPSN:10K OHM,5%,0.25W	01121	CB1035

Ckt No.	Tektronix Part No.	Serial/Model No. Eff	Dscont	Name & Description	Mfr Code	Mfr Part Number
R466	315-0103-00			RES.,FXD,CMPSN:10K OHM,5%,0.25W	01121	CB1035
R467	315-0512-00			RES.,FXD,CMPSN:5.1K OHM,5%,0.25W	01121	CB5125
R468	315-0103-00			RES.,FXD,CMPSN:10K OHM,5%,0.25W	01121	CB1035
R469	315-0103-00			RES.,FXD,CMPSN:10K OHM,5%,0.25W	01121	CB1035
R470	311-1939-00			RES.,VAR,NONWIR:PNL,20K OHM,20%,1W	01121	OBD
R473	315-0155-00			RES.,FXD,CMPSN:1.5M OHM,5%,0.25W	01121	CB1555
R474	315-0103-00			RES.,FXD,CMPSN:10K OHM,5%,0.25W	01121	CB1035
R475	315-0103-00			RES.,FXD,CMPSN:10K OHM,5%,0.25W	01121	CB1035
R476	315-0204-00			RES.,FXD,CMPSN:200K OHM,5%,0.25W	01121	CB2045
R477	315-0513-00			RES.,FXD,CMPSN:51K OHM,5%,0.25W	01121	CB5135
R479	315-0103-00			RES.,FXD,CMPSN:10K OHM,5%,0.25W	01121	CB1035
R481	315-0512-00			RES.,FXD,CMPSN:5.1K OHM,5%,0.25W	01121	CB5125
R482	315-0103-00			RES.,FXD,CMPSN:10K OHM,5%,0.25W	01121	CB1035
R483	315-0103-00			RES.,FXD,CMPSN:10K OHM,5%,0.25W	01121	CB1035
R484	315-0103-00			RES.,FXD,CMPSN:10K OHM,5%,0.25W	01121	CB1035
R491	315-0103-00			RES.,FXD,CMPSN:10K OHM,5%,0.25W	01121	CB1035
R496	321-0289-00			RES.,FXD,FILM:10K OHM,1%,0.125W	91637	MFF1816G10001F
R497	321-0289-00			RES.,FXD,FILM:10K OHM,1%,0.125W	91637	MFF1816G10001F
R509	315-0103-00			RES.,FXD,CMPSN:10K OHM,5%,0.25W	01121	CB1035
R511	315-0105-00			RES.,FXD,CMPSN:1M OHM,5%,0.25W	01121	CB1055
R512	315-0105-00			RES.,FXD,CMPSN:1M OHM,5%,0.25W	01121	CB1055
R514	315-0104-00			RES.,FXD,CMPSN:100K OHM,5%,0.25W	01121	CB1045
R516	315-0104-00			RES.,FXD,CMPSN:100K OHM,5%,0.25W	01121	CB1045
R517	315-0103-00			RES.,FXD,CMPSN:10K OHM,5%,0.25W	01121	CB1035
R521	315-0163-00			RES.,FXD,CMPSN:16K OHM,5%,0.25W	01121	CB1635
R523	315-0104-00			RES.,FXD,CMPSN:100K OHM,5%,0.25W	01121	CB1045
R524	315-0102-00			RES.,FXD,CMPSN:1K OHM,5%,0.25W	01121	CB1025
R526	315-0104-00			RES.,FXD,CMPSN:100K OHM,5%,0.25W	01121	CB1045
R527	315-0104-00			RES.,FXD,CMPSN:100K OHM,5%,0.25W	01121	CB1045
R529	315-0333-00			RES.,FXD,CMPSN:33K OHM,5%,0.25W	01121	CB3335
R531	315-0185-00			RES.,FXD,CMPSN:1.8M OHM,5%,0.25W	01121	CB1855
R533	315-0103-00			RES.,FXD,CMPSN:10K OHM,5%,0.25W	01121	CB1035
R536	315-0683-00			RES.,FXD,CMPSN:68K OHM,5%,0.25W	01121	CB6835
R537	315-0513-00			RES.,FXD,CMPSN:51K OHM,5%,0.25W	01121	CB5135
R541	315-0393-00			RES.,FXD,CMPSN:39K OHM,5%,0.25W	01121	CB3935
R542	315-0303-00			RES.,FXD,CMPSN:30K OHM,5%,0.25W	01121	CB3035
R543	315-0106-00			RES.,FXD,CMPSN:10M OHM,5%,0.25W	01121	CB1065
R546	315-0105-00			RES.,FXD,CMPSN:1M OHM,5%,0.25W	01121	CB1055
R549	315-0104-00			RES.,FXD,CMPSN:100K OHM,5%,0.25W	01121	CB1045
R557	315-0623-00			RES.,FXD,CMPSN:62K OHM,5%,0.25W	01121	CB6235
R558	315-0103-00			RES.,FXD,CMPSN:10K OHM,5%,0.25W	01121	CB1035
R559	315-0104-00			RES.,FXD,CMPSN:100K OHM,5%,0.25W	01121	CB1045
R562	315-0104-00			RES.,FXD,CMPSN:100K OHM,5%,0.25W	01121	CB1045
R563	315-0104-00			RES.,FXD,CMPSN:100K OHM,5%,0.25W	01121	CB1045
R566	315-0184-00			RES.,FXD,CMPSN:180K OHM,5%,0.25W	01121	CB1845
R567	315-0135-00			RES.,FXD,CMPSN:1.3M OHM,5%,0.25W	01121	CB1355
R571	315-0684-00			RES.,FXD,CMPSN:680K OHM,5%,0.25W	01121	CB6845
R573	315-0103-00			RES.,FXD,CMPSN:10K OHM,5%,0.25W	01121	CB1035
R574	315-0105-00			RES.,FXD,CMPSN:1M OHM,5%,0.25W	01121	CB1055
R578	315-0164-00			RES.,FXD,CMPSN:160K OHM,5%,0.25W	01121	CB1645
R581	315-0334-00			RES.,FXD,CMPSN:330K OHM,5%,0.25W	01121	CB3345
R582	315-0153-00			RES.,FXD,CMPSN:15K OHM,5%,0.25W	01121	CB1535
R586	315-0105-00			RES.,FXD,CMPSN:1M OHM,5%,0.25W	01121	CB1055

Ckt No.	Tektronix Part No.	Serial/Model No. Eff	Dscont	Name & Description	Mfr Code	Mfr Part Number
R587	315-0105-00			RES.,FXD,CMPSN:1M OHM,5%,0.25W	01121	CB1055
R588	315-0105-00			RES.,FXD,CMPSN:1M OHM,5%,0.25W	01121	CB1055
R593	315-0513-00			RES.,FXD,CMPSN:51K OHM,5%,0.25W	01121	CB5135
R594	315-0513-00			RES.,FXD,CMPSN:51K OHM,5%,0.25W	01121	CB5135
R611	315-0473-00			RES.,FXD,CMPSN:47K OHM,5%,0.25W	01121	CB4735
R617	315-0103-00			RES.,FXD,CMPSN:10K OHM,5%,0.25W	01121	CB1035
R618	315-0563-00			RES.,FXD,CMPSN:56K OHM,5%,0.25W	01121	CB5635
R619	315-0103-00			RES.,FXD,CMPSN:10K OHM,5%,0.25W	01121	CB1035
R621	315-0104-00			RES.,FXD,CMPSN:100K OHM,5%,0.25W	01121	CB1045
R623	315-0105-00			RES.,FXD,CMPSN:1M OHM,5%,0.25W	01121	CB1055
R624	315-0244-00			RES.,FXD,CMPSN:240K OHM,5%,0.25W	01121	CB2445
R628	315-0473-00			RES.,FXD,CMPSN:47K OHM,5%,0.25W	01121	CB4735
R629	315-0473-00			RES.,FXD,CMPSN:47K OHM,5%,0.25W	01121	CB4735
R635	311-1298-00			RES.,VAR,NONWIR:10K OHM,20%,0.50W	01121	W-7909
R636	315-0511-00			RES.,FXD,CMPSN:510 OHM,5%,0.25W	01121	CB5115
R637	315-0183-00			RES.,FXD,CMPSN:18K OHM,5%,0.25W	01121	CB1835
R639	315-0274-00			RES.,FXD CMPSN:270K OHM,5%,0.25W	01121	CB2745
R643	315-0204-00			RES.,FXD,CMPSN:200K OHM,5%,0.25W	01121	CB2045
R646	315-0104-00			RES.,FXD,CMPSN:100K OHM,5%,0.25W	01121	CB1045
R647	315-0184-00			RES.,FXD,CMPSN:180K OHM,5%,0.25W	01121	CB1845
R653	315-0204-00			RES.,FXD,CMPSN:200K OHM,5%,0.25W	01121	CB2045
R656	315-0184-00			RES.,FXD.CMPSN:180K OHM,5%,0.25W	01121	CB1845
R657	315-0104-00			RES.,FXD,CMPSN:100K OHM,5%,0.25W	01121	CB1045
R661	131-0566-00			LINK,TERM.CONNE:0.086 DIA X 2.375 INCH L	0000C	ERD-18TO
R662	315-0153-00			RES.,FXD,CMPSN:15K OHM,5%,0.25W	01121	CB1535
R666	315-0560-00			RES.,FXD,CMPSN:56 OHM,5%,0.25W	01121	CB5605
R667	321-0342-00			RES.,FXD,FILM:35.7K OHM,1%,0.125W	91637	MFF1816G35701F
R670	315-0332-00			RES.,FXD,CMPSN:3.3K OHM,5%,0.25W	01121	CB3325
R671	321-0377-00			RES.,FXD,FILM:82.5K OHM,1%,0.125W	91637	MFF1816G82501F
R676	315-0105-00			RES.,FXD,CMPSN:1M OHM,5%,0.25W	01121	CB1055
R679	315-0104-00			RES.,FXD,CMPSN:100K OHM,5%,0.25W	01121	CB1045
R686	321-0385-00			RES.,FXD,FILM:100K OHM,1%,0.125W	91637	MFF1816G10002F
R688	315-0335-00			RES.,FXD,CMPSN:3.3M OHM,5%,0.25W	01121	CB3355
R689	321-0807-00			RES.,FXD.FILM:900K OHM,1%,0.125W	91637	HFF1104F90002F
R690	311-1247-00			RES.,VAR,NONWIR:1M OHM,10%,0.50W	73138	72X-35-0-105K
R691	315-0304-00			RES.,FXD.CMPSN:300K OHM,5%,0.25W	01121	CB3045
R692	315-0125-00			RES.,FXD,CMPSN:1.2M OHM,5%,0.25W	01121	CB1255
R702	315-0103-00			RES.,FXD,CMPSN:10K OHM,5%,0.25W	01121	CB1035
R703	315-0203-00			RES.,FXD,CMPSN:20K OHM,5%,0.25W	01121	CB2035
R703	315-0105-00			RES.,FXD,CMPSN:1M OHM,5%,0.25W	01121	CB1055
R706	315-0103-00			RES.,FXD,CMPSN:10K OHM,5%,0.25W	01121	CB1035
R707	315-0125-00			RES.,FXD,CMPSN:1.2M OHM,5%,0.25W	01121	CB1255
R709	315-0322-00			RES.,FXD,CMPSN:3.3K OHM,5%,0.25W	01121	CB3325
R717	315-0105-00			RES.,FXD,CMPSN:1M OHM,5%,0.25W	01121	CB1055
R719	315-0104-00			RES.,FXD,CMPSN:100K OHM,5%,0.25W	01121	CB1045
R721	321-0414-00			RES.,FXD,FILM:200K OHM,1%,0.125W	91637	MFF1816G20002F
R722	321-0318-00			RES.,FXD,FILM:20K OHM,1%,0.125W	91637	MFF1816G20001F
R723	321-0356-00			RES.,FXD,FILM:49.9K OHM,1%,0.125W	91637	MFF1816G49901F
R736	315-0104-00			RES.,FXD,CMPSN:100K OHM,5%,0.25W	01121	CB1045
R751	315-0473-00			RES.,FXD,CMPSN:47K OHM,5%,0.25W	01121	CB4735

Ckt No.	Tektronix Part No.	Serial/Model No. Eff	Dscont	Name & Description	Mfr Code	Mfr Part Number
R752	321-0356-00			RES.,FXD,FILM:49.9K OHM,1%,0.125W	91637	MFF1816G49901F
R753	315-0103-00			RES.,FXD,CMPSN:10K OHM,5%,0.25W	01121	CB1035
R756	321-0318-00			RES.,FXD,FILM:20K OHM,1%,0.125W	91637	MFF1816G20001F
R757	321-0318-00			RES.,FXD,FILM:20K OHM,1%,0.125W	91637	MFF1816G20001F
R765[1]	311-1856-00			RES.,VAR,NONWIR:2.5M OHM,1W,4PST	01121	14M352
R767	315-0331-00			RES.,FXD,CMPSN:330 OHM,5%,0.25W	01121	CB3315
R768	321-0373-00			RES.,FXD,FILM:75K OHM, 1%,0.125W	91637	MFF1816G75001F
R769	321-0376-00			RES.,FXD.FILM:80.6K OHM,1%,0.125W	91637	MFF1816G80601F
R772	321-0393-00			RES.,FXD,FILM:121K OHM,1%,0.125W	91637	MFF1816G12102F
R773	315-0621-00			RES.,FXD,CMPSN:620 OHM.5%,0.25W	01121	CB6215
R774	315-0114-00			RES.,FXD,CMPSN:110K OHM,5%,0.25W	01121	CB1145
R776	315-0104-00			RES.,FXD,CMPSN:100K OHM,5%,0.25W	01121	CB1045
R787	315-0331-00			RES.,FXD,CMPSN:330 OHM,5%,0.25W	01121	CB3315
R789	321-0373-00			RES.,FXD,FILM:75K OHM, 1%,0.125W	91637	MFF1816G75001F
R792	315-0474-00			RES.,FXD,CMPSN:470K OHM,5%,0.25W	01121	CB4745
R794	315-0104-00			RES.,FXD,CMPSN:100K OHM,5%,0.25W	01121	CB1045
R796	315-0105-00			RES.,FXD,CMPSN:1M OHM,5%,0.25W	01121	CB1055
R797	315-0364-00			RES.,FXD,CMPSN:360K OHM,5%,0.25W	01121	CB3645
R806	315-0470-00			RES.,FXD,CMPSN:47 OHM,5%,0.25W	01121	CB4705
R807	315-0470-00			RES.,FXD,CMPSN:47 OHM,5%,0.25W	01121	CB4705
R808	315-0470-00			RES.,FXD,CMPSN:47 OHM,5%,0.25W	01121	CB4705
R809	315-0470-00			RES.,FXD,CMPSN:47 OHM,5%,0.25W	01121	CB4705
R817	321-0396-00			RES.,FXD,FILM:130K OHM,1%,0.125W	91637	MFF1816G13002F
R819	321-0408-00			RES.,FXD,FILM:174K OHM,1%,0.125W	91637	MFF1816G17402F
R821	315-0102-00			RES.,FXD,CMPSN:1K OHM,5%,0.25W	01121	CB1025
R822	315-0106-00			RES.,FXD,CMPSN:10M OHM,5%,0.25W	01121	CB1065
R826	321-0618-00			RES.,FXD,FILM:250K OHM,1%,0.125W	91637	MFF1816G25002F
R827	321-0350-00			RES.,FXD,FILM:43.2K OHM,1%,0.125W	91637	MFF1816G43201F
R831	315-0102-00			RES.,FXD,CMPSN:1K OHM,5%,0.25W	01121	CB1025
R836	321-0618-00			RES.,FXD,FILM:250K OHM,1%,0.125W	91637	MFF1816G25002F
R837	321-0289-00			RES.,FXD.FILM:10K OHM,1%,0.125W	91637	MFF1816G10001F
R841	315-0393-00			RES.,FXD,CMPSN:39K OHM,5%,0.25W	01121	CB3935
R842	315-0623-00			RES.,FXD,CMPSN:62K OHM,5%,0.25W	01121	CB6235
R844	315-0225-00			RES.,FXD,CMPSN:2.2M OHM,5%,0.25W	01121	CB2255
R846	315-0334-00			RES.,FXD,CMPSN:330K OHM,5%,0.25W	01121	CB3345
R851	321-0289-00			RES.,FXD,FILM:10K OHM,1%,0.125W	91637	MFF1816G10001F
R852	321-0385-00			RES.,FXD,FILM:100K OHM,1%,0.125W	91637	MFF1816G10002F
R854	321-0385-00			RES.,FXD,FILM:100K OHM,1%,0.125W	91637	MFF1816G10002F
R857	321-0685-07			RES.,FXD,FILM:30K OHM,0.1%,0.125W	91637	MFF1816C30001B
R858	321-0685-07			RES.,FXD,FILM:30K OHM,0.1%,0.125W	91637	MFF1816C30001B
R859	321-0603-07			RES.,FXD,FILM:15K OHM,0 1%,0.125W	91637	MFF1816C15001B
R862	321-0389-00			RES.,FXD,FILM:110K OHM,1%,0.125W	91637	MFF1816G11002F
R864	321-0338-00			RES.,FXD,FILM:32.4K OHM,1%,0.125W	91637	MFF1816G32401F
R865	311-1198-00			RES.,VAR,NONWIR:20K OHM,20%,0.5W	80294	3389H
R871	315-0102-00			RES.,FXD,CMPSN:1K OHM,5%,0.25W	01121	CB1025
R874	315-0821-00			RES.,FXD,CMPSN:820 OHM,5%,0.25W	01121	CB8215
R876	321-0361-00			RES.,FXD,FILM:56.2K OHM,1%,0.125W	91637	MFF1816G56201F
R877	321-0361-00			RES.,FXD,FILM:56.2K OHM,1%,0.125W	91637	MFF1816G56201F
R881	321-0289-07			RES.,FXD,FILM:10K OHM,0.1%,0.125W	91637	MFF1816C10001B
R882	321-0903-01			RES.,FXD,FILM:23.32K OHM,0.50W,0.125W	91637	MFF1816G23321D
R883	321-0993-07			RES.,FXD,FILM:90K OHM,0.1%,0.125W	91637	MFF1816C90001B
R884	321-0289-07			RES.,FXD,FILM:10K OHM,0.1%,0.125W	91637	MFF1816C10001B
R886	315-0103-00			RES.,FXD,CMPSN:10K OHM,5%,0.25W	01121	CB1035

[1]Furnished as a unit with S765.

Ckt No.	Tektronix Part No.	Serial/Model No. Eff	Dscont	Name & Description	Mfr Code	Mfr Part Number
R906	307-0509-00			RES NTWK,FXD,FI:7,100K OHM,5%	03888	A3HT23
R907	315-0105-00			RES.,FXD,CMPSN:1M OHM,5%,0.25W	01121	CB1055
R909	321-0222-09			RES.,FXD,FILM:2.00K OHM,1%,0.125W	91637	MFF1816C20000F
R910	311-1861-00			RES.,VAR,NONWIR:1K OHM,0.50W	32997	3299X-R27-102
R911	321-0201-09			RES.,FXD,FILM:1.21K OHM,1%,0.125W	91637	MFF1816C12100F
R920	311-1860-00			RES.,VAR,NONWIR:10K OHM,0.50W	32997	3299X-R27-103
R921	315-0122-00			RES.,FXD,CMPSN:1.2K OHM,5%,0.25W	01121	CB1225
R924	315-0103-00			RES.,FXD,CMPSN:10K OHM,5%,0.25W	01121	CB1035
R926	321-0193-07			RES.,FXD,FILM:1K OHM,0.1%,0.125W	91637	MFF1816C10000B
R927	321-0193-07			RES.,FXD,FILM:1K OHM,0.1%,0.125W	91637	MFF1816C10000B
R928	321-0193-07			RES.,FXD,FILM:1K OHM,0.1%,0.125W	91637	MFF1816C10000B
R929	321-0193-07			RES.,FXD,FILM:1K OHM,0.1%,0.125W	91637	MFF1816C10000B
R930	315-0102-00			RES.,FXD,CMPSN:1K OHM,5%,0.25W	01121	CB1025
R933	315-0105-00			RES.,FXD,CMPSN:1M OHM,5%,0.25W	01121	CB1055
R936	315-0513-00			RES.,FXD,CMPSN:51K OHM,5%,0.25W	01121	CB5135
R952	315-0103-00			RES.,FXD,CMPSN:10K OHM,5%,0.25W	01121	CB1035
R955	315-0103-00			RES.,FXD,CMPSN:10K OHM,5%,0.25W	01121	CB1035
R957	315-0153-00			RES.,FXD,CMPSN:15K OHM,5%,0.25W	01121	CB1535
R958	315-0103-00			RES.,FXD,CMPSN:10K OHM,5%,0.25W	01121	CB1035
R960	315-0153-00			RES.,FXD,CMPSN:15K OHM,5%,0.25W	01121	CB1535
R961	315-0103-00			RES.,FXD,CMPSN:10K OHM,5%,0.25W	01121	CB1035
R963	315-0153-00			RES.,FXD,CMPSN:15K OHM,5%,0.25W	01121	CB1535
R964	315-0103-00			RES.,FXD,CMPSN:10K OHM,5%,0.25W	01121	CB1035
R966	315-0153-00			RES.,FXD,CMPSN:15K OHM,5%,0.25W	01121	CB1535
R968	315-0275-00			RES.,FXD,CMPSN:2.7M OHM,5%,0.25W	01121	CB2755
R969	315-0275-00			RES.,FXD,CMPSN:2.7M OHM,5%,0.25W	01121	CB2755
R974	315-0562-00			RES.,FXD,CMPSN:5.6K OHM,5%,0.25W	01121	CB5625
R976	307-0508-00			RES NTWK,FXD,FI:15,1M OHM,5%,0.125W	01121	316A105
R979	315-0433-00			RES.,FXD,CMPSN:43K OHM,5%,0.25W	01121	CB4335
R982	315-0103-00			RES.,FXD,CMPSN:10K OHM,5%,0.25W	01121	CB1035
R990	315-0103-00			RES.,FXD,CMPSN:10K OHM,5%,0.25W	01121	CB1035
R991	315-0203-00			RES.,FXD,CMPSN:20K OHM,5%,0.25W	01121	CB2035
R992	315-0103-00			RES.,FXD,CMPSN:10K OHM,5%,0.25W	01121	CB1035
R993	315-0203-00			RES.,FXD,CMPSN:20K OHM,5%,0.25W	01121	CB2035
R1001	315-0392-00			RES.,FXD,CMPSN:3.9K OHM,5%,0.25W	01121	CB3925
R1002	315-0122-00			RES.,FXD,CMPSN:1.2K OHM,5%,0.25W	01121	CB1225
R1003	321-0816-03			RES.,FXD,FILM:5K OHM,0.25%,0.125W	91637	MFF1816D50000C
R1004	321-1296-03			RES.,FXD,FILM:12K OHM,0.25%,0.125W	91637	MFF1816D12001C
R1006	315-0100-00			RES.,FXD,CMPSN:10 OHM,5%,0.25W	01121	CB1005
R1011	315-0106-00			RES.,FXD,CMPSN:10M OHM,5%,0.25W	01121	CB1065
R1013	315-0106-00			RES.,FXD,CMPSN:10M OHM,5%,0.25W	01121	CB1065
R1016	315-0304-00			RES.,FXD,CMPSN:300K OHM.5%,0.25W	01121	CB3045
R1031	315-0302-00			RES.,FXD,CMPSN:3K OHM,5%,0.25W	01121	CB3025
R1032	315-0103-00			RES.,FXD,CMPSN:10K OHM,5%,0.25W	01121	CB1035
R1033	315-0103-00			RES.,FXD,CMPSN:10K OHM,5%,0.25W	01121	CB1035
R1038	315-0753-00			RES.,FXD,CMPSN:75K OHM,5%,0.25W	01121	CB7535
R1039	315-0363-00			RES.,FXD,CMPSN:36K OHM,5%,0.25W	01121	CB3635
R1042	315-0203-00			RES.,FXD,CMPSN:20K OHM,5%,0.25W	01121	CB2035
R1043	315-0103-00			RES.,FXD,CMPSN:10K OHM,5%,0.25W	01121	CB1035
R1051	315-0105-00			RES.,FXD,CMPSN:1M OHM,5%,0.25W	01121	CB1055
R1052	315-0105-00			RES.,FXD,CMPSN:1M OHM,5%.0.25W	01121	CB1055
R1053	315-0105-00			RES.,FXD,CMPSN:1M OHM,5%,0.25W	01121	CB1055
R1054	315-0105-00			RES.,FXD,CMPSN:1M OHM,5%,0.25W	01121	CB1055

Ckt No.	Tektronix Part No.	Serial/Model No. Eff	Dscont	Name & Description	Mfr Code	Mfr Part Number
R1061	315-0243-00			RES.,FXD,CMPSN:24K OHM,5%,0.25W	01121	CB2435
R1062	315-0133-00			RES.,FXD,CMPSN:13K OHM,5%,0.25W	01121	CB1335
R1065	315-0103-00			RES.,FXD,CMPSN:10K OHM,5%,0.25W	01121	CB1035
R1066	315-0105-00			RES.,FXD,CMPSN:1M OHM,5%,0.25W	01121	CB1055
R1067	315-0103-00			RES.,FXD,CMPSN:10K OHM,5%,0.25W	01121	CB1035
R1068	315-0105-00			RES.,FXD,CMPSN:1M OHM,5%,0.25W	01121	CB1055
R1069	315-0243-00			RES.,FXD,CMPSN:24K OHM,5%,0.25W	01121	CB2435
R1121	315-0103-00			RES.,FXD,CMPSN:10K OHM,5%,0.25W	01121	CB1035
R1122	321-0243-00			RES.,FXD,FILM:3.32K OHM,1%,0.125W	91637	MFF1816G33200F
R1123	321-0255-00			RES.,FXD,FILM:4.42K OHM,1%,0.125W	91637	MFF1816G44200F
R1124	321-0270-00			RES.,FXD,FILM:6.34K OHM,1%,0.125W	91637	MFF1816G63400F
R1126	315-0335-00			RES.,FXD,CMPSN:3.3M OHM,5%,0.25W	01121	CB3355
R1127	315-0104-00			RES.,FXD,CMPSN:100K OHM,5%,0.25W	01121	CB1045
R1133	307-0509-00			RES NTWK,FXD,FI:7,100K OHM,5%	03888	A3HT23
R1151	315-0684-00			RES.,FXD,CMPSN:680K OHM,5%,0.25W	01121	CB6845
R1152	315-0102-00			RES.,FXD,CMPSN:1K OHM,5%,0.25W	01121	CB1025
R1153	315-0103-00			RES.,FXD,CMPSN:10K OHM,5%,0.25W	01121	CB1035
R1154	315-0623-00			RES.,FXD,CMPSN:62K OHM,5%,0.25W	01121	CB6235
R1161	315-0104-00			RES.,FXD,CMPSN:100K OHM,5%,0.25W	01121	CB1045
R1162	315-0104-00			RES.,FXD,CMPSN:100K OHM,5%,0.25W	01121	CB1045
R1163	315-0104-00			RES.,FXD,CMPSN:100K OHM,5%,0.25W	01121	CB1045
R1164	315-0104-00			RES.,FXD,CMPSN:100K OHM,5%,0.25W	01121	CB1045
R1179	315-0103-00			RES.,FXD,CMPSN:10K OHM,5%,0.25W	01121	CB1035
R1201	315-0103-00			RES.,FXD,CMPSN:10K OHM,5%,0.25W	01121	CB1035
R1202	315-0103-00			RES.,FXD,CMPSN:10K OHM,5%,0.25W	01121	CB1035
R1203	315-0104-00			RES.,FXD,CMPSN:100K OHM,5%,0.25W	01121	CB1045
R1206	315-0103-00			RES.,FXD,CMPSN:10K OHM,5%,0.25W	01121	CB1035
R1207	315-0103-00			RES.,FXD,CMPSN:10K OHM,5%,0.25W	01121	CB1035
R1209	315-0104-00			RES.,FXD,CMPSN:100K OHM,5%,0.25W	01121	CB1045
R1211	315-0114-00			RES.,FXD,CMPSN:110K OHM,5%,0.25W	01121	CB1145
R1212	315-0103-00			RES.,FXD,CMPSN:10K OHM,5%,0.25W	01121	CB1035
R1213	315-0104-00			RES.,FXD,CMPSN:100K OHM,5%,0.25W	01121	CB1045
R1216	315-0114-00			RES.,FXD,CMPSN:110K OHM,5%,0.25W	01121	CB1145
R1221	321-0993-07			RES.,FXD,FILM:90K OHM,0.1%,0.125W	91637	MFF1816C90001B
R1222	321-0289-07			RES.,FXD,FILM:10K OHM,0.1%,0.125W	91637	MFF1816C10001B
R1236	315-0103-00			RES.,FXD,CMPSN:10K OHM,5%,0.25W	01121	CB1035
R1237	315-0104-00			RES.,FXD,CMPSN:100K OHM,5%,0.25W	01121	CB1045
R1239	315-0114-00			RES.,FXD,CMPSN:110K OHM,5%,0.25W	01121	CB1145
R1242	315-0103-00			RES.,FXD,CMPSN:10K OHM,5%,0.25W	01121	CB1035
R1243	315-0275-00			RES.,FXD,CMPSN:2.7M OHM,5%,0.25W	01121	CB2755
R1246	315-0103-00			RES.,FXD,CMPSN:10K OHM,5%,0.25W	01121	CB1035
R1247	315-0275-00			RES.,FXD,CMPSN:2.7M OHM,5%,0.25W	01121	CB2755
R1256	315-0103-00			RES.,FXD,CMPSN:10K OHM,5%,0.25W	01121	CB1035
R1257	315-0104-00			RES.,FXD.CMPSN:100K OHM,5%,0.25W	01121	CB1045
R1259	315-0114-00			RES.,FXD,CMPSN:110K OHM.5%,0.25W	01121	CB1145
R1311	315-0104-00			RES.,FXD,CMPSN:100K OHM,5%,0.25W	01121	CB1045
R1312	315-0103-00			RES.,FXD,CMPSN:10K OHM,5%,0.25W	01121	CB1035
R1314	321-0437-00			RES.,FXD,FILM:348K OHM,1%,0.125W	91637	MFF1816G34802F
R1315	311-1945-00			RES.,VAR,NONWIR:200K OHM,10%,0.50W	73138	MODEL 68W
R1321	315-0104-00			RES.,FXD,CMPSN:100K OHM,5%,0.25W	01121	CB1045
R1322	321-0414-03			RES.,FXD,FILM:200K OHM,0.25%,0.125W	91637	MFF1816D20002C
R1323	321-0414-03			RES.,FXD,FILM:200K OHM,0.25%,0.125W	91637	MFF1816D20002C
R1326	315-0304-00			RES.,FXD,CMPSN:300K OHM,5%,0.25W	01121	CB3045

Ckt No.	Tektronix Part No.	Serial/Model No. Eff	Dscont	Name & Description	Mfr Code	Mfr Part Number
R1332	315-0823-00			RES.,FXD,CMPSN:82K OHM,5%,0.25W	01121	CB8235
R1333	321-0414-03			RES.,FXD,FILM:200K OHM,0.25%,0.125W	91637	MFF1816D20002C
R1334	321-0644-00			RES.,FXD,FILM:100K OHM,0.25%,0.125W	91637	MFF1816C10002C
R1336	315-0103-00			RES.,FXD,CMPSN:10K OHM,5%,0.25W	01121	CB1035
R1337	315-0104-00			RES.,FXD,CMPSN:100K OHM,5%.0.25W	01121	CB1045
R1338	315-0114-00			RES.,FXD,CMPSN:110K OHM,5%,0.25W	01121	CB1145
R1341	315-0104-00			RES.,FXD,CMPSN:100K OHM,5%,0.25W	01121	CB1045
R1342	315-0103-00			RES.,FXD,CMPSN:10K OHM,5%,0.25W	01121	CB1035
R1344	321-0434-00			RES.,FXD,FILM:324K OHM,1%,0.125W	91637	MFF1816G32402F
R1345	311-1945-00			RES.,VAR,NONWIR:200K OHM,10%,0.50W	73138	MODEL 68W
R1351	315-0104-00			RES.,FXD,CMPSN:100K OHM,5%,0.25W	01121	CB1045
R1352	321-0414-03			RES.,FXD,FILM:200K OHM,0.25%,0.125W	91637	MFF1816D20002C
R1353	321-0414-03			RES.,FXD,FILM:200K OHM,0.25%,0.125W	91637	MFF1816D20002C
R1356	315-0304-00			RES.,FXD,CMSPN:300K OHM,5%,0.25W	01121	CB3045
R1362	315-0433-00			RES.,FXD,CMPSN:43K OHM,5%,0.25W	01121	CB4335
R1363	321-0414-03			RES.,FXD,FILM:200K OHM,0.25%,0.125W	91637	MFF1816D20002C
R1364	321-0756-03			RES.,FXD,FILM:50K OHM,0.25%,0.125W	75042	CEAT2-5002C
R1366	315-0103-00			RES.,FXD,CMPSN:10K OHM,5%,0.25W	01121	CB1035
R1367	315-0104-00			RES.,FXD,CMPSN:100K OHM,5%,0.25W	01121	CB1045
R1368	315-0114-00			RES.,FXD,CMPSN:110K OHM,5%,0.25W	01121	CB1145
R1403	321-1296-07			RES.,FXD,FILM:12K OHM,0.1%,0.125W	91637	MFF1816C12001B
R1404	321-1682-07			RES.,FXD,FILM:5.7K OHM,0.1%,0.125W	91637	MFF1816C57000B
R1406	321-0245-00			RES.,FXD,FILM:3.48K OHM,1%,0.125W	91637	MFF1816G34800F
R1408	321-0193-07			RES.,FXD,FILM:1K OHM,0.1%,0.125W	91637	MFF1816C10000B
R1409	321-0191-09			RES.,FXD,FILM:953 OHM,1%,0.125W	91637	MFF1816C953R0F
R1412	315-0123-00			RES.,FXD,CMPSN:12K OHM,5%,0.25W	01121	CB1235
R1413	315-0244-00			RES.,FXD,CMPSN:240K OHM,5%,0.25W	01121	CB2445
R1417	321-0137-00			RES.,FXD,FILM:261 OHM,1%,0.125W	91637	MFF1816G261R0F
R1418	321-0168-00			RES.,FXD,FILM:549 OHM,1%,0.125W	91637	MFF1816G549R0F
R1419	321-0190-00			RES.,FXD,FILM:931 OHM,1%,0.125W	91637	MFF1816G931R0F
R1424	321-0202-09			RES.,FXD,FILM:1.24K OHM,1%,0.125W	91637	MFF1816C12400F
R1425	311-1036-00			RES.,VAR,NONWIR:TRMR,200 OHM,0.5W	73138	66WR-201K-SM
R1426	321-0171-09			RES.,FXD,FILM:590 OHM,1%,0.125W	91637	MFF1816C590R0F
R1427	311-1175-00			RES.,VAR,NONWIR:100 OHM,10%,0.50W	73138	66WR101KSM
R1428	321-0641-07			RES.,FXD,FILM:1.8K OHM,0.1%,0.125W	91637	MFF1816C18000B
R1429	321-0193-07			RES.,FXD,FILM:1K OHM,0.1%,0.125W	91637	MFF1816C10000B
R1434	321-0202-09			RES.,FXD,FILM:1.24K OHM,1%,0.125W	91637	MFF1816C12400F
R1435	311-1944-00			RES.,VAR,NONWIR:1K OHM,10%,0.50W	32997	3299W-R27-102
R1436	321-0249-09			RES.,FXD,FILM:3.83K OHM,1%,0.125W	91637	MFF1816C38300F
R1439	321-0240-00			RES.,FXD.FILM:3.09K OHM,1%,0.125W	91637	MFF1816G30900F
R1442	321-0193-07			RES.,FXD,FILM:1K OHM,0.1%,0.125W	91637	MFF1816C10000B
R1443	321-0193-07			RES.,FXD,FILM:1K OHM,0.1%,0.125W	91637	MFF1816C10000B
R1445	311-1943-00			RES.,VAR,NONWIR:10K OHM,10%,0.50W	73138	MODEL 68W
R1446	321-0193-07			RES.,FXD,FILM:1K OHM,0.1%,0.125W	91637	MFF1816C10000B
R1447	321-0193-07			RES.,FXD,FILM:1K OHM,0.1%.0.125W	91637	MFF1816C10000B
R1463	321-1296-07			RES.,FXD,FILM:12K OHM,0.1%,0.125W	91637	MFF1816C12001B
R1464	321-1682-07			RES.,FXD,FILM:5.7K OHM,0.1%,0.125W	91637	MFF1816C57000B
R1466	321-0245-00			RES.,FXD,FILM:3.48K OHM,1%,0.125W	91637	MFF1816G34800F
R1468	321-0193-07			RES.,FXD,FILM:1K OHM,0.1%,0.125W	91637	MFF1816C10000B
R1469	321-0191-09			RES.,FXD,FILM:953 OHM,1%,0.125W	91637	MFF1816C953R0F
R1472	315-0123-00			RES.,FXD,CMPSN:12K OHM,5%,0.25W	01121	CB1235
R1473	315-0244-00			RES.,FXD,CMPSN:240K OHM,5%,0.25W	01121	CB2445
R1477	321-0137-00			RES.,FXD,FILM:261 OHM,1%,0.125W	91637	MFF1816G261R0F

Ckt No.	Tektronix Part No.	Serial/Model No. Eff	Dscont	Name & Description	Mfr Code	Mfr Part Number
R1478	321-0168-00			RES.,FXD,FILM:549 OHM,1%,0.125W	91637	MFF1816G549R0F
R1479	321-0190-00			RES.,FXD,FILM:931 OHM,1%,0.125W	91637	MFF1816G931R0F
R1484	321-0202-09			RES.,FXD,FILM:1.24K OHM,1%,0.125W	91637	MFF1816C12400F
R1485	311-1036-00			RES.,VAR,NONWIR:TRMR,200 OHM,0.5W	73138	66WR-201K-SM
R1486	321-0171-09			RES.,FXD,FILM:590 OHM,1%,0.125W	91637	MFF1816C590R0F
R1487	311-1175-00			RES.,VAR,NONWIR:100 OHM,10%,0.50W	73138	66WR101KSM
R1488	321-0641-07			RES.,FXD,FILM:1.8K OHM,0.1%,0.125W	91637	MFF1816C18000B
R1489	321-0193-07			RES.,FXD,FILM:1K OHM,0.1%,0.125W	91637	MFF1816C10000B
R1505[1]	311-1865-00			RES.,VAR,NONWIR:50K OHM,1W,4PST	01121	15M011
R1506	321-0189-00			RES.,FXD,FILM:909 OHM,1%,0.125W	91637	MFF1816G909R0F
R1507	321-0211-00			RES.,FXD,FILM:1.54K OHM,1%,0.125W	91637	MFF1816G15400F
R1511	321-0828-03			RES.,FXD,FILM:2.4K OHM,0.25%,0.125W	91637	MFF1816D24000C
R1512	321-0828-03			RES.,FXD,FILM:2.4K OHM,0.25%,0.125W	91637	MFF1816D24000C
R1513	321-1296-03			RES.,FXD,FILM:12K OHM,0.25%,0.125W	91637	MFF1816D12001C
R1515[2]	311-1866-00			RES.,VAR,NONWIR:50K OHM,1W	01121	15M010
R1516	321-0189-00			RES.,FXD,FILM:909 OHM,1%,0.125W	91637	MFF1816G909R0F
R1517	321-0211-00			RES.,FXD,FILM:1.54K OHM,1%,0.125W	91637	MFF1816G15400F
R1522	315-0125-00			RES.,FXD,CMPSN:1.2M OHM,5%,0.25W	01121	CB1255
R1523	315-0104-00			RES.,FXD,CMPSN:100K OHM,5%,0.25W	01121	CB1045
R1531	315-0104-00			RES.,FXD,CMPSN:100K OHM,5%,0.25W	01121	CB1045
R1532	315-0104-00			RES.,FXD,CMPSN:100K OHM,5%,0.25W	01121	CB1045
R1533	315-0104-00			RES.,FXD,CMPSN:100K OHM,5%,0.25W	01121	CB1045
R1536	315-0102-00			RES.,FXD,CMPSN:1K OHM,5%,0.25W	01121	CB1025
R1537	315-0184-00			RES.,FXD,CMPSN:180K OHM,5%,0.25W	01121	CB1845
R1543	315-0125-00			RES.,FXD.CMPSN:1.2M OHM,5%,0.25W	01121	CB1255
R1544	315-0104-00			RES.,FXD,CMPSN:100K OHM,5%,0.25W	01121	CB1045
R1544	315-0224-00			RES.,FXD,CMPSN:220K OHM,5%,0.25W	01121	CB2245
R1547	315-0104-00			RES.,FXD,CMPSN:100K OHM,5%,0.25W	01121	CB1045
R1551	315-0683-00			RES.,FXD,CMPSN:68K OHM,5%,0.25W	01121	CB6835
R1556	315-0434-00			RES.,FXD,CMPSN:430K OHM,5%,0.25W	01121	CB4345
R1557	315-0104-00			RES.,FXD,CMPSN:100K OHM,5%,0.25W	01121	CB1045
R1561	315-0103-00			RES.,FXD.CMPSN:10K OHM,5%,0.25W	01121	CB1035
R1562	315-0683-00			RES.,FXD,CMPSN:68K OHM,5%,0.25W	01121	CB6835
R1563	315-0683-00			RES.,FXD,CMPSN:68K OHM,5%,0.25W	01121	CB6835
R1564	315-0333-00			RES.,FXD.CMPSN:33K OHM,5%,0.25W	01121	CB3335
R1566	315-0104-00			RES.,FXD,CMPSN:100K OHM,5%,0.25W	01121	CB1045
R1571	315-0105-00			RES.,FXD,CMPSN:1M OHM,5%,0.25W	01121	CB1055
R1572	315-0104-00			RES.,FXD,CMPSN:100K OHM,5%,0.25W	01121	CB1045
R1574	315-0333-00			RES.,FXD,CMPSN:33K OHM,5%,0.25W	01121	CB3335
R1576	315-0510-00			RES.,FXD,CMPSN:51 OHM,5%,0.25W	01121	CB5105
R1581	315-0683-00			RES.,FXD,CMPSN:68K OHM,5%,0.25W	01121	CB6835
R1582	315-0683-00			RES.,FXD,CMPSN:68K OHM,5%,0.25W	01121	CB6835
R1587	315-0104-00			RES.,FXD,CMPSN:100K OHM,5%,0.25W	01121	CB1045
R1588	315-0104-00			RES.,FXD,CMPSN:100K OHM,5%,0.25W	01121	CB1045
R1590	315-0683-00			RES.,FXD,CMPSN:68K OHM,5%,0.25W	01121	CB6835
R1591	315-0475-00			RES.,FXD,CMPSN:4.7M OHM,5%,0.25W	01121	CB4755
R1592	315-0333-00			RES.,FXD,CMPSN:33K OHM,5%,0.25W	01121	CB3335
R1593	315-0333-00			RES.,FXD CMPSN:33K OHM,5%,0.25W	01121	CB3335
R1610	311-1226-00			RES.,VAR.NONWIR:2.5K OHM,20%,0.50W	32997	3386F-T04-252
R1611	321-0297-00			RES.,FXD,FILM:12.1K OHM,1%,0.125W	91637	MFF1816G12101F
R1613	321-0366-00			RES.,FXD,FILM:63.4K OHM,1%,0.125W	91637	MFF1816G63401F
R1616	321-0385-00			RES.,FXD,FILM:100K OHM,1%,0.125W	91637	MFF1816G10002F
R1617	315-0104-00			RES.,FXD CMPSN:100K OHM,5%,0.25W	01121	CB1045

[1]Furnished as a unit with S1505.
[2]Furnished as a unit with S1515.

Ckt No.	Tektronix Part No.	Serial/Model No. Eff	Dscont	Name & Description	Mfr Code	Mfr Part Number
R1619	321-0373-00			RES.,FXD,FILM:75K OHM, 1%,0.125W	91637	MFF1816G75001F
R1621	315-0103-00			RES.,FXD,CMPSN:10K OHM,5%,0.25W	01121	CB1035
R1631	315-0105-00			RES.,FXD,CMPSN:1M OHM,5%,0.25W	01121	CB1055
R1636	315-0134-00			RES.,FXD,CMPSN:130K OHM,5%.0.25W	01121	CB1345
R1637	315-0154-00			RES.,FXD,CMPSN:150K OHM,5%,0.25W	01121	CB1545
R1641	315-0202-00			RES.,FXD,CMPSN:2K OHM,5%,0.25W	01121	CB2025
R1642	315-0273-00			RES.,FXD,CMPSN:27K OHM,5%,0.25W	01121	CB2735
R1646	315-0105-00			RES.,FXD,CMPSN:1M OHM,5%,0.25W	01121	CB1055
R1647	315-0103-00			RES.,FXD,CMPSN:10K OHM,5%,0.25W	01121	CB1035
R1652	315-0473-00			RES.,FXD,CMPSN:47K OHM,5%,0.25W	01121	CB4735
R1653	315-0473-00			RES.,FXD,CMPSN:47K OHM,5%,0.25W	01121	CB4735
R1658	315-0471-00			RES.,FXD,CMPSN:470 OHM,5%,0.25W	01121	CB4715
R1659	315-0102-00			RES.,FXD,CMPSN:1K OHM,5%,0.25W	01121	CB1025
R1662	315-0473-00			RES.,FXD,CMPSN:47K OHM,5%,0.25W	01121	CB4735
R1663	315-0222-00			RES.,FXD,CMPSN:2.2K OHM,5%,0.25W	01121	CB2225
R1667	315-0330-00			RES.,FXD,CMPSN:33 OHM,5%,0.25W	01121	CB3305
R1672	315-0473-00			RES.,FXD,CMPSN:47K OHM,5%,0.25W	01121	CB4735
R1677	315-0330-00			RES.,FXD.CMPSN:33 OHM,5%,0.25W	01121	CB3305
R1684	315-0102-00			RES.,FXD,CMPSN:1K OHM,5%,0.25W	01121	CB1025
R1685	311-1222-00			RES.,VAR,NONWIR:100 OHM,20%,0.50W	32997	3386F-T04-101
R1686	321-0142-00			RES.,FXD,FILM:294 OHM,1%,0.125W	91637	MFF1816G294R0F
R1687	315-0100-00			RES.,FXD,CMPSN:10 OHM,5%,0.25W	01121	CB1005
R1701	315-0105-00			RES.,FXD,CMPSN:1M OHM,5%,0.25W	01121	CB1055
R1702	315-0105-00			RES.,FXD,CMPSN:1M OHM,5%,0.25W	01121	CB1055
R1704	315-0104-00			RES.,FXD,CMPSN:100K OHM,5%,0.25W	01121	CB1045
R1706	315-0474-00			RES.,FXD,CMPSN:470K OHM,5%,0.25W	01121	CB4745
R1712	315-0333-00			RES.,FXD,CMPSN:33K OHM,5%,0.25W	01121	CB3335
R1713	315-0510-00			RES.,FXD,CMPSN:51 OHM,5%,0.25W	01121	CB5105
R1714	315-0103-00			RES.,FXD,CMPSN:10K OHM,5%,0.25W	01121	CB1035
R1725	315-0151-00			RES.,FXD,CMPSN:150 OHM,5%,0.25W	01121	CB1515
R1727	315-0331-00			RES.,FXD,CMPSN:330 OHM,5%,0.25W	01121	CB3315
R1729	315-0151-00			RES.,FXD,CMPSN:150 OHM,5%,0.25W	01121	CB1515
R1731	311-1521-00			RES.,VAR,NONWIR:100K OHM,20%,1W	01121	11M335
R1732	315-0104-00			RES.,FXD,CMPSN:100K OHM,5%,0.25W	01121	CB1045
R1733	311-1521-00			RES.,VAR,NONWIR:100K OHM,20%,1W	01121	11M335
R1734	315-0104-00			RES.,FXD,CMPSN:100K OHM,5%,0.25W	01121	CB1045
R1742	315-0105-00			RES.,FXD,CMPSN:1M OHM,5%,0.25W	01121	CB1055
R1751	321-0420-00			RES.,FXD,FILM:232K OHM,1%,0.125W	91637	MFF1816G23202F
R1752	321-0030-00			RES.,FXD,FILM:20 OHM,1%,0.125W	91637	MFF1816G20R00F
R1753	321-0001-00			RES.,FXD,FILM:10 OHM,1%,0.125W	75042	CEAT0-10R00F
R1758	315-0154-00			RES.,FXD,CMPSN:150K OHM,5%,0.25W	01121	CB1545
R1771	315-0204-00			RES.,FXD,CMPSN:200K OHM,5%,0.25W	01121	CB2045
R1774	315-0563-00			RES.,FXD,CMPSN:56K OHM,5%,0.25W	01121	CB5635
R1776	315-0104-00			RES.,FXD,CMPSN:100K OHM,5%,0.25W	01121	CB1045
R1777	315-0104-00			RES.,FXD,CMPSN:100K OHM,5%,0.25W	01121	CB1045
R1784	315-0102-00			RES.,FXD,CMPSN:1K OHM,5%,0.25W	01121	CB1025
R1785	315-0102-00			RES.,FXD,CMPSN:1K OHM,5%,0.25W	01121	CB1025
R1792	315-0563-00			RES.,FXD,CMPSN:56K OHM,5%,0.25W	01121	CB5635
R1793	315-0104-00			RES.,FXD,CMPSN:100K OHM,5%,0.25W	01121	CB1045
R1794	315-0104-00			RES.,FXD,CMPSN:100K OHM,5%,0.25W	01121	CB1045
R1812	315-0104-00			RES.,FXD.CMPSN:100K OHM,5%,0.25W	01121	CB1045
R1813	315-0393-00			RES.,FXD,CMPSN:39K OHM,5%,0.25W	01121	CB3935
R1814	315-0563-00			RES.,FXD,CMPSN:56K OHM,5%,0.25W	01121	CB5635

Ckt No.	Tektronix Part No.	Serial/Model No. Eff	Dscont	Name & Description	Mfr Code	Mfr Part Number
R1820	307-0573-00			RES NTWK,FXD,FI:(9) 100K OHM,(4)200K OHM,2%	01121	314 L10104
R1834	315-0153-00			RES.,FXD,CMPSN:15K OHM,5%,0.25W	01121	CB1535
R1835	311-1228-00			RES.,VAR,NONWIR:10K OHM,20%,0.50W	32997	3386F-T04-103
R1836	315-0913-00			RES.,FXD,CMPSN:91K OHM,5%,0.25W	01121	CB9135
R1842	315-0102-00			RES.,FXD,CMPSN:1K OHM,5%,0.25W	01121	CB1025
R1844	321-0352-00			RES.,FXD,FILM:45.3K OHM,1%,0.125W	91637	MFF1816G45301F
R1845	311-1231-00			RES.,VAR,NONWIR:25K OHM,20%,0.50W	02111	63M-253T602
R1847	321-0363-00			RES.,FXD,FILM:59K OHM,1%,0.125W	91637	MFF1816G59001F
R1852	315-0102-00			RES.,FXD,CMPSN:1K OHM,5%,0.25W	01121	CB1025
R1857	321-0365-00			RES.,FXD.FILM:61.9K OHM,1%,0.125W	91637	MFF1816G61901F
R1858	321-0385-00			RES.,FXD,FILM:100K OHM,1%,0.125W	91637	MFF1816G10002F
R1913	301-0150-00			RES.,FXD,CMPSN:15 OHM,5%,0.50W	01121	EB1505
R1918	321-0320-00			RES.,FXD,FILM:21K OHM,1%,0.125W	91637	MFF1816G21001F
R1919	321-0320-00			RES.,FXD,FILM:21K OHM,1%,0.125W	91637	MFF1816G21001F
R1923	321-0320-00			RES.,FXD,FILM:21K OHM,1%,0.125W	91637	MFF1816G21001F
R1926	321-0368-00			RES.,FXD,FILM:66.5K OHM,1%,0.125W	91637	MFF1816G66501F
R1927	315-0103-00			RES.,FXD,CMPSN:10K OHM,5%,0.25W	01121	CB1035
R1927	315-0162-00			RES.,FXD,CMPSN:1.6K OHM,5%,0.25W	01121	CB1625
R1936	315-0103-00			RES.,FXD,CMPSN:10K OHM,5%,0.25W	01121	CB1035
R1937	315-0471-00			RES.,FXD,CMPSN:470 OHM,5%,0.25W	01121	CB4715
R1939	315-0222-00			RES.,FXD,CMPSN:2.2K OHM,5%,0.25W	01121	CB2225
R1942	315-0222-00			RES.,FXD,CMPSN:2.2K OHM,5%,0.25W	01121	CB2225
R1943	308-0677-00			RES.,FXD,WW:1 OHM,5%,2W	75042	BWH-1R000J
R1944	315-0102-00			RES.,FXD,CMPSN:1K OHM,5%,0.25W	01121	CB1025
R1945	301-0750-00			RES.,FXD,CMPSN:75 OHM,5%,0.50W	01121	EB7505
R1959	315-0102-00			RES.,FXD,CMPSN:1K OHM,5%,0.25W	01121	CB1025
R1961	315-0333-00			RES.,FXD,CMPSN:33K OHM,5%,0.25W	01121	CB3335
R1962	315-0333-00			RES.,FXD,CMPSN:33K OHM,5%,0.25W	01121	CB3335
R1963	315-0154-00			RES.,FXD,CMPSN:150K OHM,5%,0.25W	01121	CB1545
R1966	315-0102-00			RES.,FXD,CMPSN:1K OHM,5%,0.25W	01121	CB1025
R1967	315-0103-00			RES.,FXD,CMPSN:10K OHM,5%,0.25W	01121	CB1035
R1969	315-0330-00			RES.,FXD,CMPSN:33 OHM,5%,0.25W	01121	CB3305
R1984	315-0332-00			RES.,FXD,CMPSN:3.3K OHM,5%,0.25W	01121	CB3325
R1987	315-0102-00			RES.,FXD,CMPSN:1K OHM,5%,0.25W	01121	CB1025
R1989	321-0228-09			RES.,FXD,FILM:2.32K OHM,1%,0.125W	91637	MFF1816C23200F
R1990	311-1223-00			RES.,VAR,NONWIR:250 OHM,10%,0.50W	32997	3386F-T04-251
R1991	321-0228-09			RES.,FXD,FILM:2.32K OHM,1%,0.125W	91637	MFF1816C23200F
R1993	315-0102-00			RES.,FXD,CMPSN:1K OHM,5%,0.25W	01121	CB1025
R1996	321-0289-07			RES.,FXD,FILM:10K OHM,0.1%.0.125W	91637	MFF1816C10001B
R1997	321-0924-07			RES.,FXD,FILM:40K OHM,0.1%,0.125W	91637	MFF1816C40001B
R2011	321-0272-07			RES.,FXD,FILM:6.65K OHM,0.1%,0.125W	91637	MFF1816C66500B
R2012	321-0924-07			RES.,FXD,FILM:40K OHM,0.1%,0.125W	91637	MFF1816C40001B
R2013	321-0370-00			RES.,FXD,FILM:69.8K OHM,1%,0.125W	91637	MFF1816G69801F
R2014	315-0101-00			RES.,FXD,CMPSN:100 OHM,5%,0.25W	01121	CB1015
R2018	315-0152-00			RES.,FXD,CMPSN:1.5K OHM,5%,0.25W	01121	CB1525
R2019	315-0751-00			RES.,FXD,CMPSN:750 OHM,5%,0.25W	01121	CB7515
R2023	315-0103-00			RES.,FXD,CMPSN:10K OHM,5%,0.25W	01121	CB1035
R2026	315-0201-00			RES.,FXD,CMPSN:200 OHM,5%,0.25W	01121	CB2015
R2027	315-0103-00			RES.,FXD,CMPSN:10K OHM,5%,0.25W	01121	CB1035
R2031	315-0103-00			RES.,FXD,CMPSN:10K OHM,5%,0.25W	01121	CB1035
R2032	315-0103-00			RES.,FXD,CMPSN:10K OHM,5%,0.25W	01121	CB1035
R2033	315-0105-00			RES.,FXD,CMPSN:1M OHM,5%,0.25W	01121	CB1055
R2042	315-0103-00			RES.,FXD,CMPSN:10K OHM,5%,0.25W	01121	CB1035
R2043	315-0103-00			RES.,FXD,CMPSN:10K OHM,5%,0.25W	01121	CB1035

Ckt No.	Tektronix Part No.	Serial/Model No. Eff	Dscont	Name & Description	Mfr Code	Mfr Part Number
R2046	315-0102-00			RES.,FXD,CMPSN:1K OHM,5%,0.25W	01121	CB1025
R2047	315-0201-00			RES.,FXD,CMPSN:200 OHM,5%,0.25W	01121	CB2015
R2051	315-0102-00			RES.,FXD,CMPSN:1K OHM,5%,0.25W	01121	CB1025
R2054	315-0102-00			RES.,FXD,CMPSN:1K OHM,5%,0.25W	01121	CB1025
R2061	321-0816-07			RES.,FXD,FILM:5K OHM,0.1%,0.125W	91637	MFF1816C50000B
R2062	321-1296-07			RES.,FXD,FILM:12K OHM,0.1%,0.125W	91637	MFF1816C12001B
R2064	315-0104-00			RES.,FXD,CMPSN:100K OHM,5%,0.25W	01121	CB1045
R2073	315-0223-00			RES.,FXD,CMPSN:22K OHM,5%,0.25W	01121	CB2235
R2075	307-0104-00			RES.,FXD,CMPSN:3.3 OHM,5%,0.25W	01121	CB33G5
R2077	315-0123-00			RES.,FXD,CMPSN:12K OHM,5%,0.25W	01121	CB1235
R2092	307-0104-00			RES.,FXD,CMPSN:3.3 OHM,5%,0.25W	01121	CB33G5
R2097	315-0223-00			RES.,FXD,CMPSN:22K OHM,5%,0.25W	01121	CB2235
R2121	315-0225-00			RES.,FXD,CMPSN:2.2M OHM,5%,0.25W	01121	CB2255
R2131	315-0225-00			RES.,FXD,CMPSN:2.2M OHM,5%,0.25W	01121	CB2255
R2132	315-0225-00			RES.,FXD,CMPSN:2.2M OHM,5%,0.25W	01121	CB2255
R2133	315-0225-00			RES.,FXD,CMPSN:2.2M OHM,5%,0.25W	01121	CB2255
R2134	315-0225-00			RES.,FXD,CMPSN:2.2M OHM,5%,0.25W	01121	CB2255
R2137	315-0683-00			RES.,FXD,CMPSN:68K OHM,5%,0.25W	01121	CB6835
R2140	311-1255-00			RES.,VAR,NONWIR:2M OHM,20%,0.50W	32997	3386F-T04-205
R2142	315-0104-00			RES.,FXD,CMPSN:100K OHM,5%,0.25W	01121	CB1045
R2143	315-0104-00			RES.,FXD.CMPSN:100K OHM,5%,0.25W	01121	CB1045
R2154	315-0475-00			RES.,FXD,CMPSN:4.7M OHM,5%,0.25W	01121	CB4755
R2156	316-0825-00			RES.,FXD,CMPSN:8.2M OHM,10%,0.25W	01121	CB8251
R2161	315-0392-00			RES.,FXD,CMPSN:3.9K OHM,5%,0.25W	01121	CB3925
R2163	315-0102-00			RES.,FXD,CMPSN:1K OHM,5%,0.25W	01121	CB1025
RT1690[1]	119-0950-00			COIL,TUBE DEFL:CRT YOKE	80009	119-0950-00
RT1922	307-1097-01			RES.,THERMAL:32K OHM,2%,AT 50 DEG C	80009	307-1097-01
S101	260-1213-00			SWITCH,PUSH:DPDT,1A,28VDC	71590	2KBC040000-457
S405	260-1771-00			SWITCH,PUSH:1 BUTTON,DPDT	71590	2KAB010000
S605	260-1881-00			SWITCH,PUSH:2 & 4 POLE,6 BUTTON	71590	OBD
S765[2]						
S1135	260-1882-00			SWITCH,PUSH:2 POLE 6 BTN	71590	2KBM0420001074
S1426	260-1879-00			SWITCH,ROTARY:TEMPERATURE SELECTOR	81073	71A30-01-4-02N
S1505[3]						
S1510[4]						
S1515[5]						
S1532	260-1771-00			SWITCH,PUSH:1 BUTTON,DPDT	71590	2KAB010000
S1554[4]						
S1559	260-1686-00			SWITCH,PUSH:1 STA,2 POLE,MOMENTARY	71590	2KAA010000-685
S1782[4]						
S1910	260-1300-01			SWITCH,SLIDE:DPDT,3A,125V	82389	11A-1354
S1956[4]						
T110	120-0947-00			XFMR,SIGNAL:POT CORE	80009	120-0947-00
T162	120-1126-00			TRANSFORMER,RF:SIGNAL INPUT,POT CORE	80009	120-1126-00
T422	120-1127-00			TRANSFORMER,RF:ISOLATION,POT CORE	80009	120-1127-00
T1010	120-0142-00			XFMR,PWR,SDN & SU:	80009	120-0142-00
T1910	120-1128-00			XFMR,PWR STPDN:	80009	120-1128-00
T1972	120-1125-00			XFMR,SDN & SU:POWER & HV,POT CORE	80009	120-1125-00
U147	156-0158-00			MICROCIRCUIT,LI:DUAL OPERATIONAL AMPLIFIER	80009	156-0158-00
U181	156-0158-00			MICROCIRCUIT,LI:DUAL OPERATIONAL AMPLIFIER	80009	156-0158-00
U187	156-0158-00			MICROCIRCUIT,LI:DUAL OPERATIONAL AMPLIFIER	80009	156-0158-00
U215	156-0495-00			MICROCIRCUIT,LI:QUAD OP AMPL,SGL SUPPLY	27014	LM324N

[1]Furnished as a unit with L1690.
[2]Furnished as a unit with R765.
[3]Furnished as a unit with R1505.
[4]Furnished as a unit with 670-5075-00.
[5]Furnished as a unit with R1515.

Ckt No.	Tektronix Part No.	Serial/Model No. Eff	Dscont	Name & Description	Mfr Code	Mfr Part Number
U291	156-0158-00			MICROCIRCUIT,LI:DUAL OPERATIONAL AMPLIFIER	80009	156-0158-00
U306	156-0495-00			MICROCIRCUIT,LI:QUAD OP AMPL,SGL SUPPLY	27014	LM324N
U321	156-0912-00			MICROCIRCUIT,LI:OPNL TRANSCONDUCTOR AMPL	80009	156-0912-00
U371	156-0402-00			MICROCIRCUIT,DI:TIMER	18324	NE555V
U408	156-0912-00			MICROCIRCUIT.LI:OPNL TRANSCONDUCTOR AMPL	80009	156-0912-00
U412	156-0742-00			MICROCIRCUIT LI:OPERATIONAL AMPLIFIER	80009	156-0742-00
U430	156-0534-00			MICROCIRCUIT,LI:DUAL DIFF AMPL,14 LD DIP	02735	CA3102E
U439	156-0158-00			MICROCIRCUIT,LI:DUAL OPERATIONAL AMPLIFIER	80009	156-0158-00
U446	156-0158-00			MICROCIRCUIT,LI:DUAL OPERATIONAL AMPLIFIER	80009	156-0158-00
U466	156-0495-00			MICROCIRCUIT,LI:QUAD OP AMPL,SGL SUPPLY	27014	LM324N
U491	156-0158-00			MICROCIRCUIT,LI:DUAL OPERATIONAL AMPLIFIER	80009	156-0158-00
U506	156-0495-00			MICROCIRCUIT.LI:QUAD OP AMPL,SGL SUPPLY	27014	LM324N
U523	156-0912-00			MICROCIRCUIT,LI:OPNL TRANSCONDUCTOR AMPL	80009	156-0912-00
U571	156-0402-00			MICROCIRCUIT,DI:TIMER	18324	NE555V
U591	156-0349-00			MICROCIRCUIT,DI:QUAD 2-INPUT NOR GATE	80009	156-0349-00
U592	156-0513-00			MICROCIRCUIT,DI:8-CHAN MUX	80009	156-0513-00
U615	156-0512-00			MICROCIRCUIT,LI:OPERATIONAL AMPLIFIER	27014	LM308N
U619	156-0495-00			MICROCIRCUIT,LI:QUAD OP AMPL,SGL SUPPLY	27014	LM324N
U639	156-0158-00			MICROCIRCUIT,LI:DUAL OPERATIONAL AMPLIFIER	80009	156-0158-00
U702	156-0158-00			MICROCIRCUIT,LI:DUAL OPERATIONAL AMPLIFIER	80009	156-0158-00
U711	156-0745-00			MICROCIRCUIT,DI:HEX INVERTER	80009	156-0745-00
U726	156-0350-00			MICROCIRCUIT,DI:QUAD 2-INPUT NAND GATE	02735	CD4011AE
U729	156-0349-00			MICROCIRCUIT,DI:QUAD 2-INPUT NOR GATE	80009	156-0349-00
U736	156-0523-00			MICROCIRCUIT,DI:7-STAGE BINARY COUNTER	04713	MC14024P
U737	156-0349-00			MICROCIRCUIT,DI:QUAD 2-INPUT NOR GATE	80009	156-0349-00
U739	156-0350-00			MICROCIRCUIT,DI:QUAD 2-INPUT NAND GATE	02735	CD4011AE
U741	156-0644-00			MICROCIRCUIT,DI:QUAD BILATERAL SWITCH	02735	CD4066AE
U752	156-0158-00			MICROCIRCUIT,LI:DUAL OPERATIONAL AMPLIFIER	80009	156-0158-00
U770	156-0158-00			MICROCIRCUIT,LI:DUAL OPERATIONAL AMPLIFIER	80009	156-0158-00
U824	156-0495-00			MICROCIRCUIT,LI:QUAD OP AMPL,SGL SUPPLY	27014	LM324N
U872	156-0495-00			MICROCIRCUIT,LI:QUAD OP AMPL,SGL SUPPLY	27014	LM324N
U920	156-0751-00			MICROCIRCUIT,LI:ADC SUBSYSTEM	04713	MC1405L
U925	156-0644-00			MICROCIRCUIT,DI:QUAD BILATERAL SWITCH	02735	CD4066AE
U926	156-0200-00			MICROCIRCUIT,LI:LOW INPUT/OFFSET CURRENT	18324	N5556V
U927	156-0200-00			MICROCIRCUIT,LI:LOW INPUT/OFFSET CURRENT	18324	N5556V
U928	156-0067-00			MICROCIRCUIT,LI:OPERATIONAL AMPLIFIER	80009	156-0067-00
U934	156-0494-00			MICROCIRCUIT,DI:HEX INVERTER/BUFFER	80009	156-0494-00
U935	156-0366-00			MICROCIRCUIT,LI:DUAL D-TYPE F-F	80009	156-0366-00
U946	156-0349-00			MICROCIRCUIT,DI:QUAD 2-INPUT NOR GATE	80009	156-0349-00
U947	156-0749-00			MICROCIRCUIT,DI:3.5 DIGIT A/DLOGIC SS	04713	MC14435
U951	156-0525-00			MICROCIRCUIT,DI:DUAL J-K MASTER SLAVE F-F	80009	156-0525-00
U952	156-0754-00			MICROCIRCUIT,DI:DUAL 4-INPUT NOR GATES	02735	CD4002AF
U973	156-0754-00			MICROCIRCUIT,DI:DUAL 4-INPUT NOR GATES	02735	CD4002AF
U975	156-0284-00			MICROCIRCUIT,DI:BCD-7 SEG DECODER/DRIVER	27014	DM8880N
U977	156-0349-00			MICROCIRCUIT,DI:QUAD 2-INPUT NOR GATE	80009	156-0349-00
U1001	156-0067-00			MICROCIRCUIT.LI:OPERATIONAL AMPLIFIER	80009	156-0067-00
U1021	156-0752-00			MICROCIRCUIT,DI:DUAL BCD UP COUNTER	04713	MC14518CP
U1023	156-0366-00			MICROCIRCUIT,LI:DUAL D-TYPE F-F	80009	156-0366-00
U1025	156-0525-00			MICROCIRCUIT,DI:DUAL J-K MASTER SLAVE F-F	80009	156-0525-00
U1039	156-0402-00			MICROCIRCUIT,DI:TIMER	18324	NE555V
U1123	156-0495-00			MICROCIRCUIT,LI:QUAD OP AMPL,SGL SUPPLY	27014	LM324N
U1133	156-0349-00			MICROCIRCUIT,DI:QUAD 2-INPUT NOR GATE	80009	156-0349-00
U1146	156-0756-00			MICROCIRCUIT,DI:BCD TO DECIMAL DECODER	80009	156-0756-00

Ckt No.	Tektronix Part No.	Serial/Model No. Eff	Dscont	Name & Description	Mfr Code	Mfr Part Number
U1147	156-0494-00			MICROCIRCUIT,DI:HEX INVERTER/BUFFER	80009	156-0494-00
U1149	156-0753-00			MICROCIRCUIT,DI:EXPANDABLE 4-W 2-INP AOI GATE	80009	156-0753-00
U1151	156-0350-00			MICROCIRCUIT,DI:QUAD 2-INPUT NAND GATE	02735	CD4011AE
U1175	156-0513-00			MICROCIRCUIT,DI:8-CHAN MUX	80009	156-0513-00
U1176	156-0349-00			MICROCIRCUIT,DI:QUAD 2-INPUT NOR GATE	80009	156-0349-00
U1177	156-0366-00			MICROCIRCUIT,LI:DUAL D-TYPE F-F	80009	156-0366-00
U1179	156-0750-00			MICROCIRCUIT,DI:DUAL MONOSTABLE MV	80009	156-0750-00
U1180	156-0753-00			MICROCIRCUIT,DI:EXPANDABLE 4-W 2-INP AOI GATE	80009	156-0753-00
U1206	156-0495-00			MICROCIRCUIT.LI:QUAD OP AMPL,SGL SUPPLY	27014	LM324N
U1223	156-0644-00			MICROCIRCUIT.DI:QUAD BILATERAL SWITCH	02735	CD4066AE
U1230	156-0495-00			MICROCIRCUIT,LI:QUAD OP AMPL,SGL SUPPLY	27014	LM324N
U1231	156-0466-00			MICROCIRCUIT,DI:QUAD 2-INPUT NAND BUFFER	01295	SN74LS37N
U1236	156-0495-00			MICROCIRCUIT,LI:QUAD OP AMPL,SGL SUPPLY	27014	LM324N
U1240	156-0495-00			MICROCIRCUIT,LI:QUAD OP AMPL,SGL SUPPLY	27014	LM324N
U1312	156-0750-00			MICROCIRCUIT,DI:DUAL MONOSTABLE MV	80009	156-0750-00
U1313	156-0644-00			MICROCIRCUIT,DI:QUAD BILATERAL SWITCH	02735	CD4066AE
U1326	156-0750-00			MICROCIRCUIT,DI:DUAL MONOSTABLE MV	80009	156-0750-00
U1335	156-0495-00			MICROCIRCUIT,LI:QUAD OP AMPL,SGL SUPPLY	27014	LM324N
U1342	156-0750-00			MICROCIRCUIT,DI:DUAL MONOSTABLE MV	80009	156-0750-00
U1343	156-0644-00			MICROCIRCUIT.DI:QUAD BILATERAL SWITCH	02735	CD4066AE
U1406	156-0495-00			MICROCIRCUIT,LI:QUAD OP AMPL,SGL SUPPLY	27014	LM324N
U1420	156-0495-00			MICROCIRCUIT,LI:QUAD OP AMPL,SGL SUPPLY	27014	LM324N
U1445	156-0067-00			MICROCIRCUIT,LI:OPERATIONAL AMPLIFIER	80009	156-0067-00
U1451	156-0349-00			MICROCIRCUIT.DI:QUAD 2-INPUT NOR GATE	80009	156-0349-00
U1452	156-0644-00			MICROCIRCUIT,DI:QUAD BILATERAL SWITCH	02735	CD4066AE
U1456	156-0495-00			MICROCIRCUIT,LI:QUAD OP AMPL,SGL SUPPLY	27014	LM324N
U1456	156-0350-00			MICROCIRCUIT,DI:QUAD 2-INPUT NAND GATE	02735	CD4011AE
U1457	156-0350-00			MICROCIRCUIT,DI:QUAD 2-INPUT NAND GATE	02735	CD4011AE
U1521	156-0495-00			MICROCIRCUIT,LI:QUAD OP AMPL,SGL SUPPLY	27014	LM324N
U1522	156-0350-00			MICROCIRCUIT,DI:QUAD 2-INPUT NAND GATE	02735	CD4011AE
U1547	156-0793-00			MICROCIRCUIT,DI:DUAL 4-INP NAND GATE	80009	156-0793-00
U1623	156-0366-00			MICROCIRCUIT,LI:DUAL D-TYPE F-F	80009	156-0366-00
U1626	156-0349-00			MICROCIRCUIT,DI:QUAD 2-INPUT NOR GATE	80009	156-0349-00
U1627	156-0349-00			MICROCIRCUIT,DI:QUAD 2-INPUT NOR GATE	80009	156-0349-00
U1632	156-0644-00			MICROCIRCUIT.DI:QUAD BILATERAL SWITCH	02735	CD4066AE
U1633	156-0750-00			MICROCIRCUIT,DI:DUAL MONOSTABLE MV	80009	156-0750-00
U1649	156-0067-00			MICROCIRCUIT,LI:OPERATIONAL AMPLIFIER	80009	156-0067-00
U1702	156-0494-00			MICROCIRCUIT,DI:HEX INVERTER/BUFFER	80009	156-0494-00
U1706	156-0750-00			MICROCIRCUIT,DI:DUAL MONOSTABLE MV	80009	156-0750-00
U1707	156-0575-00			MICROCIRCUIT,DI:3 INPUT NOR GATE	80009	156-0575-00
U1709	156-0895-00			MICROCIRCUIT.DI:14-BIT BINARYCOUNTER	80009	156-0895-00
U1712	156-0366-00			MICROCIRCUIT,LI:DUAL D-TYPE F-F	80009	156-0366-00
U1745	156-0545-00			MICROCIRCUIT,DI:12-BIT BINARY COUNTER	02735	C04040AE
U1758	156-0067-00			MICROCIRCUIT,LI:OPERATIONAL AMPLIFIER	80009	156-0067-00
U1810	156-0545-00			MICROCIRCUIT,DI:12-BIT BINARY COUNTER	02735	C04040AE
U1841	156-0158-00			MICROCIRCUIT,LI:DUAL OPERATIONAL AMPLIFIER	80009	156-0158-00
U1926	156-0067-00			MICROCIRCUIT,LI:OPERATIONAL AMPLIFIER	80009	156-0067-00
U1984	156-0937-00			MICROCIRCUIT,LI:VOLTAGE REFERENCE	80009	156-0937-00
U1987	156-0495-00			MICROCIRCUIT,LI:QUAD OP AMPL,SGL SUPPLY	27014	LM324N
U2033	156-0105-00			MICROCIRCUIT,LI:OPERATIONAL AMPLIFIER	27014	LM301AN
U2310	150-1039-00			IND,DGTL DSPLY:NEON,7 SEGMENT,1.5 DIGIT	73138	SP331
U2320	150-1015-00			LAMP,GLOW,RDOUT:	73138	SP332

Ckt No.	Tektronix Part No.	Serial/Model No. Eff	Dscont	Name & Description	Mfr Code	Mfr Part Number
V2120	154-0508-01			ELECTRON TUBE:CRT	80009	154-0508-01
VR145	152-0195-00			SEMICOND DEVICE:ZENER,0.4W,5.1V,5%	80009	152-0195-00
VR146	152-0195-00			SEMICOND DEVICE:ZENER,0.4W,5.1V,5%	80009	152-0195-00
VR349	152-0195-00			SEMICOND DEVICE:ZENER,0.4W,5.1V,5%	80009	152-0195-00
VR549	152-0195-00			SEMICOND DEVICE:ZENER,0.4W,5.1V,5%	80009	152-0195-00
VR670	152-0217-00			SEMICOND DEVICE:ZENER,0.4W,8.2V,5%	80009	152-0217-00
VR709	152-0217-00			SEMICOND DEVICE:ZENER,0.4W,8.2V,5%	80009	152-0217-00
VR1961	152-0149-00			SEMICOND DEVICE:ZENER,0.4W,10V,5%	04713	1N961B

OPTION 5

Ckt No.	Tektronix Part No.	Serial/Model No. Eff	Dscont	Name & Description	Mfr Code	Mfr Part Number
A12	670-5245-00			CKT BOARD ASSY:B FLASH B RATE CONVERTOR	80009	670-5245-00
C2216	283-0000-00			CAP.,FXD,CER DI:0.001UF,+100-0%,500V	72982	831-516E102P
C2236	283-0193-00			CAP.,FXD,CER DI:510PF,2%,100V	51642	T200100NP0511G
C2252	290-0536-00			CAP.,FXD,ELCTLT:10UF,20%,25V	90201	TDC106M025FL
C2253	290-0536-00			CAP.,FXD,ELCTLT:10UF,20%,25V	90201	TDC106M025FL
C2254	290-0536-00			CAP.,FXD,ELCTLT:10UF,20%,25V	90201	TDC106M025FL
C2257	281-0549-00			CAP.,FXD,CER DI:68PF,10%,500V	72982	301-000U2J0680K
CR2212	152-0141-02			SEMICOND DEVICE:SILICON,30V,150MA	07910	1N4152
CR2232	152-0141-02			SEMICOND DEVICE:SILICON,30V,150MA	07910	1N4152
Q2212	151-0188-00			TRANSISTOR:SILICON,PNP	01295	2N3906
Q2232	151-0188-00			TRANSISTOR:SILICON,PNP	01295	2N3906
R2211	315-0563-00			RES.,FXD,CMPSN:56K OHM,5%,0.25W	01121	CB5635
R2212	315-0104-00			RES.,FXD,CMPSN:100K OHM,5%,0.25W	01121	CB1045
R2213	315-0104-00			RES.,FXD,CMPSN:100K OHM,5%,0.25W	01121	CB1045
R2216	315-0104-00			RES.,FXD,CMPSN:100K OHM,5%,0.25W	01121	CB1045
R2231	315-0183-00			RES.,FXD,CMPSN:18K OHM,5%,0.25W	01121	CB1835
R2232	315-0333-00			RES.,FXD,CMPSN:33K OHM,5%,0.25W	01121	CB3335
R2233	315-0273-00			RES.,FXD,CMPSN:27K OHM,5%,0.25W	01121	CB2735
R2236	315-0104-00			RES.,FXD,CMPSN:100K OHM,5%,0.25W	01121	CB1045
R2256	315-0103-00			RES.,FXD,CMPSN:10K OHM,5%,0.25W	01121	CB1035
R2257	315-0103-00			RES.,FXD,CMPSN:10K OHM,5%,0.25W	01121	CB1035
R2273	307-0573-00			RES NTWK,FXD FI:(9)100K,(11)200K OHM,2%	01121	314 L10104
R2277	321-0385-00			RES.,FXD,FILM:100K OHM,1%,0.125W	91637	MFF1816G10002F
R2279	311-1267-00			RES.,VAR,NONWIR:5K OHM,10%,0.50W	32997	3329P-L58-502
R2280	321-0384-00			RES.,FXD,FILM:97.6K OHM,1%,0.125W	91637	MFF1816G97601F
R2282	321-0385-00			RES.,FXD,FILM:100K OHM,1%,0.125W	91637	MFF1816G10002F
R2283	315-0203-00			RES.,FXD,CMPSN:20K OHM,5%,0.25W	01121	CB2035
R2284	315-0203-00			RES.,FXD,CMPSN:20K OHM,5%,0.25W	01121	CB2035
R2287	315-0203-00			RES.,FXD,CMPSN:20K OHM,5%,0.25W	01121	CB2035
R2289	311-1879-00			RES.,VAR,NONWIR:20K OHM,0.50W	73138	68-6-0
R2290	315-0103-00			RES.,FXD,CMPSN:10K OHM,5%,0.25W	01121	CB1035
R2291	315-0101-00			RES.,FXD,CMPSN:100 OHM,5%,0.25W	01121	CB1015
U2216	156-0750-00			MICROCIRCUIT,DI:DUAL MONOSTABLE MV	80009	156-0750-00
U2240	156-0545-00			MICROCIRCUIT,DI:12 BIT BINARY CNTR	04713	MC1404BC1
U2241	156-0682-00			MICROCIRCUIT,DI:HEX D FLIP-FLOP	80009	156-0682-00
U2242	156-0682-00			MICROCIRCUIT,DI:HEX D FLIP-FLOP	80009	156-0682-00
U2245	156-0582-00			MICROCIRCUIT,DI:BINARY UP/DOWN COUNTER	80009	156-0582-00
U2246	156-0582-00			MICROCIRCUIT,DI:BINARY UP/DOWN COUNTER	80009	156-0582-00
U2247	156-0582-00			MICROCIRCUIT,DI:BINARY UP/DOWN COUNTER	80009	156-0582-00
U2251	156-0545-00			MICROCIRCUIT,DI:12 BIT BINARY CNTR	04713	MC1404BC1
U2252	156-0682-00			MICROCIRCUIT,DI:HEX D FLIP-FLOP	80009	156-0682-00
U2253	156-0682-00			MICROCIRCUIT,DI:HEX D FLIP-FLOP	80009	156-0682-00
U2256	156-0745-00			MICROCIRCUIT,DI:HEX INVERTER	02735	CD4069AY
U2257	156-0350-00			MICROCIRCUIT,DI:QUAD 2-INPUT NAND GATE	02735	CD4011AE
U2259	156-0366-00			MICROCIRCUIT,LI:DUAL D-TYPE F-F	80009	156-0366-00
U2266	156-0895-00			MICROCIRCUIT,DI:14-BIT BINARYCOUNTER	80009	156-0895-00
U2267	156-0793-00			MICROCIRCUIT,DI:DUAL 4-INP NAND GATE	80009	156-0793-00
U2279	156-0158-00			MICROCIRCUIT,LI:DUAL OPERATIONAL AMPLIFIER	80009	156-0158-00

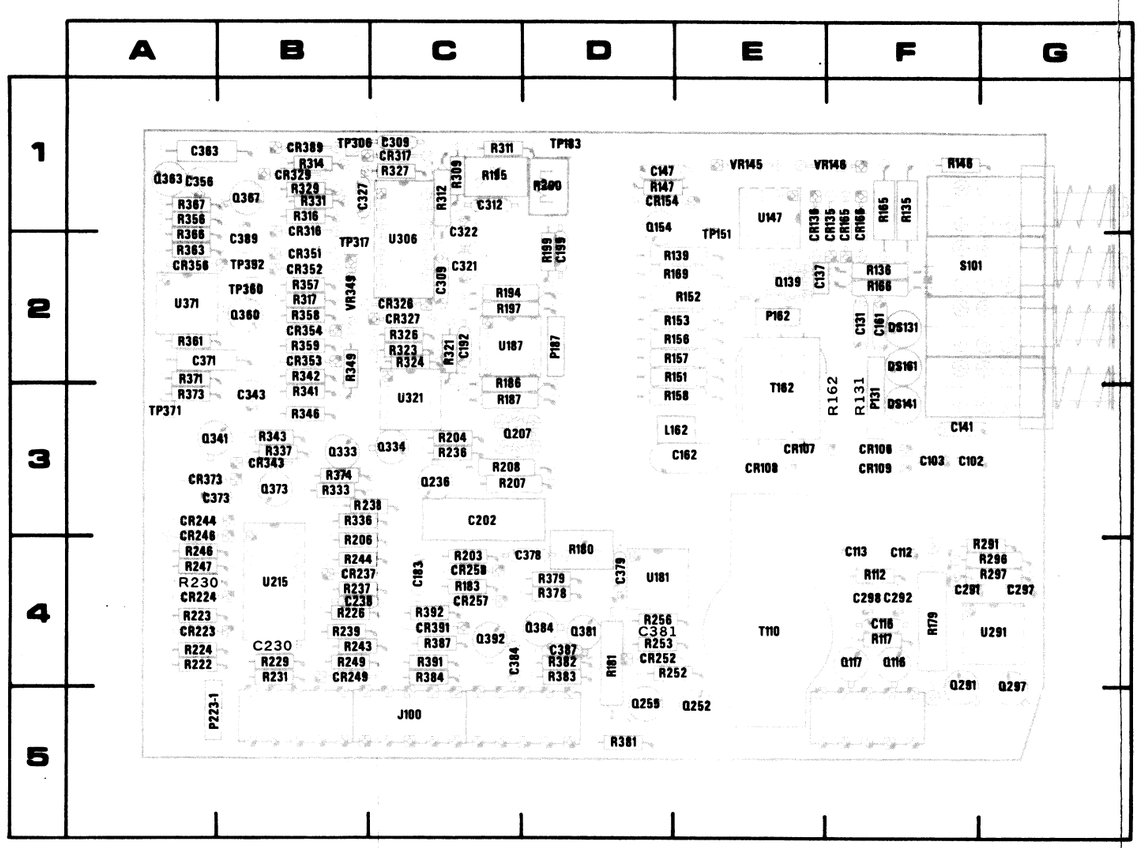

A1—ECG board components.

CKT NO	GRID COORD	CKT NO	GRID COORD	CKT NO	GRID COORD	CKT NO	GRID COORD	CKT NO	GRID COORD	CKT NO	GRID COORD
C102	3F	CR106	3F	L162	3E	R156	2D	R252	4D	R378	4D
C103	3F	CR107	3E			R157	2D	R253	4D	R379	4D
C112	4F	CR108	3E	P131	3F	R158	3E	R256	4D	R381	5D
C113	4F	CR109	3F	P162	2E	R162	3F	R291	4G	R382	4D
C116	4F	CR135	1F	P187	2D	R165	1F	R296	4G	R383	4D
C131	2F	CR136	1E	P223-1	5A	R166	2F	R297	4G	R384	4C
C137	2E	CR154	1D			R169	2D	R309	1C	R387	4C
C141	3F	CR165	1F	Q116	4F	R179	4F	R311	1C	R391	4C
C147	1D	CR166	1F	Q117	4F	R180	4D	R312	1C	R392	4C
C161	2F	CR223	4A	Q139	2E	R181	4D	R314	1B		
C162	3E	CR224	4A	Q154	1D	R183	4C	R316	1B	S101	2F
C183	4C	CR237	4B	Q207	3C	R186	2C	R317	2B		
C192	2C	CR244	3A	Q136	3C	R187	3C	R321	2C	T110	4E
C199	2D	CR246	3A	Q252	5E	R194	2C	R323	2C	T162	3E
C202	3C	CR249	4B	Q255	5D	R195	1C	R324	2C		
C230	4B	CR252	4D	Q291	4F	R197	2C	R326	2C	TP151	2E
C238	4B	CR257	4C	Q297	4G	R199	2D	R327	1C	TP183	1D
C291	4F	CR258	4C	Q333	3B	R200	1D	R329	1B	TP306	1B
C292	4F	CR316	1B	Q334	3C	R203	4C	R331	1B	TP317	2B
C297	4G	CR317	1C	Q341	3A	R204	3C	R333	3B	TP360	2B
C298	4F	CR326	2C	Q360	2B	R206	4B	R336	3B	TP371	3A
C309	1C	CR327	2C	Q363	1A	R207	3C	R337	3B	TP392	2B
C309	2C	CR329	1B	Q367	1B	R208	3C	R341	3B		
C312	1C	CR343	3B	Q373	3B	R222	4A	R342	2B	U147	1E
C321	2C	CR351	2B	Q381	4D	R223	4A	R343	3B	U181	4D
C322	1C	CR352	2B	Q384	4D	R224	4A	R346	3B	U187	2C
C327	1B	CR353	2B	Q392	4C	R226	4B	R349	2B	U215	4B
C343	3B	CR354	2B			R229	4B	R356	1A	U291	4G
C356	1A	CR356	2A	R112	4F	R231	4B	R357	2B	U306	2C
C363	1A	CR373	3A	R117	4F	R230	4A	R358	2B	U321	3C
C371	2A	CR389	1B	R131	3F	R236	3C	R359	2B	U371	2A
C373	3A	CR391	4C	R135	1F	R237	4B	R361	2A		
C378	4D			R136	2F	R238	3B	R363	2A	VR145	1E
C379	4D	DS131	2F	R139	2D	R239	4B	R366	2A	VR146	1F
C381	4D	DS141	3F	R146	1F	R243	4B	R367	1A	VR349	2B
C384	4C	DS161	2F	R147	1D	R244	4B	R371	2A		
C387	4D			R151	2D	R246	4A	R373	3A		
C389	2B	J100	5C	R152	2E	R247	4A	R374	3B		
				R153	2D	R249	4B				

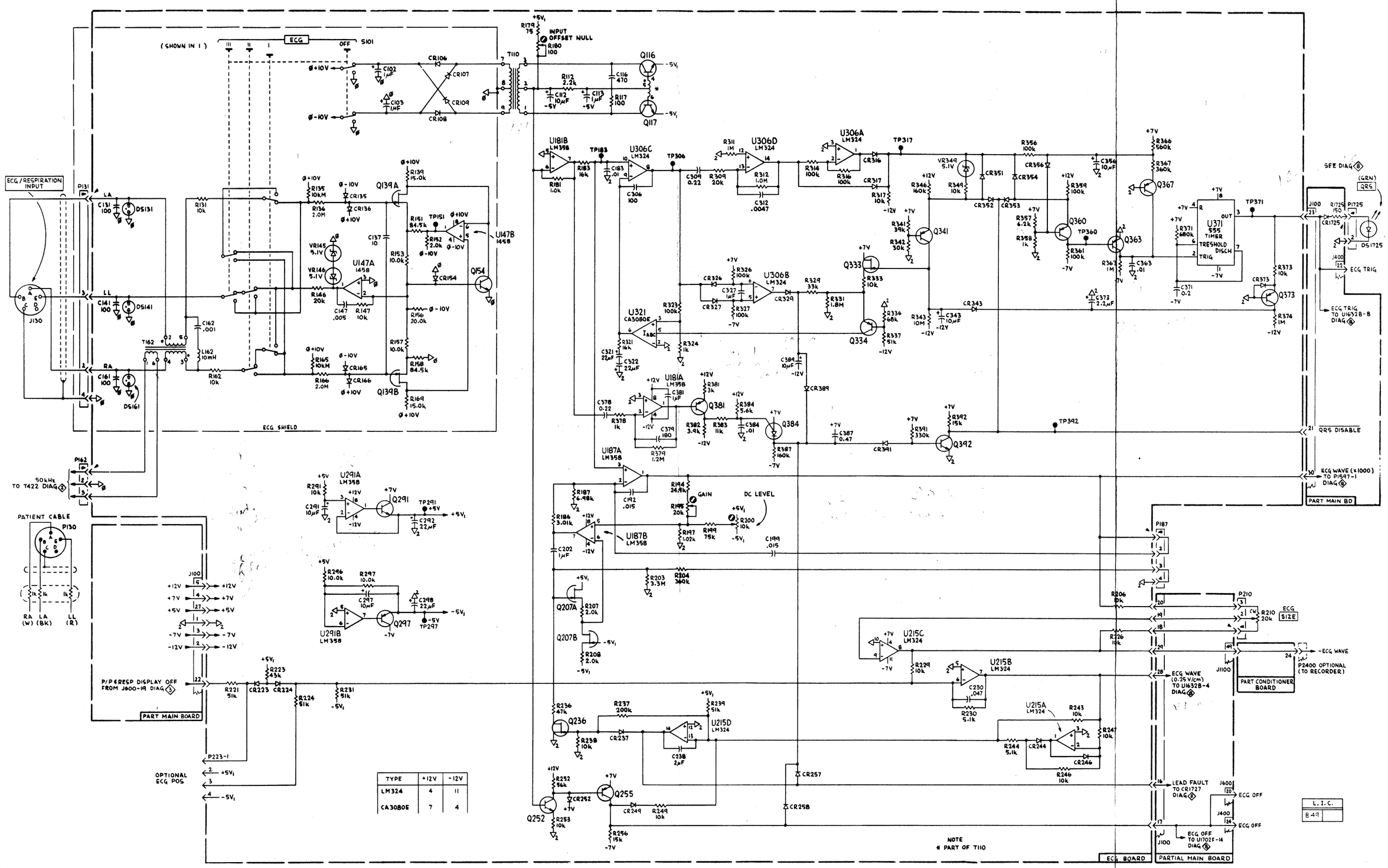

TYPE	+12V	-12V
LM324	4	11
CA3080E	7	4

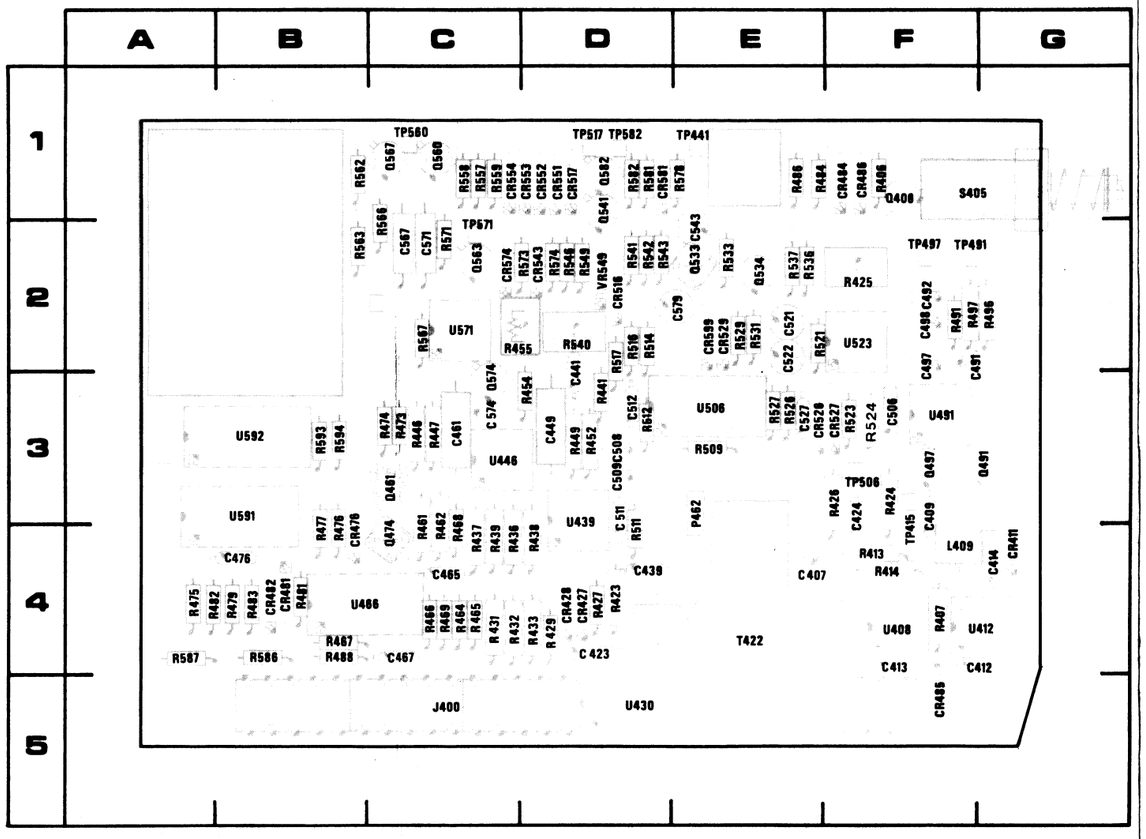

A2—Respiration board components.

CKT NO	GRID COORD	CKT NO	GRID COORD	CKT NO	GRID COORD	CKT NO	GRID COORD	CKT NO	GRID COORD	CKT NO	GRID COORD
C407	3E	CR411	4G	Q497	3F	R455	2C	R526	3E	S405	1G
C409	3F	CR427	4D	Q524	2E	R461	4C	R527	3E		
C412	4G	CR428	4D	Q541	1D	R462	4C	R529	2E	T422	3E
C413	4F	CR476	3B	Q560	1C	R464	4C	R524	3F		
C414	4G	CR481	4B	Q563	2C	R465	4C	R531	2E	TP415	3F
C423	4D	CR482	4B	Q567	1C	R466	4C	R533	2E	TP441	1E
C424	3F	CR484	1F	Q574	3C	R467	4B	R536	2E	TP491	2F
C439	4D	CR485	5F	Q582	1D	R468	4C	R537	2E	TP497	2F
C441	2D	CR486	1F			R469	4C	R540	2D	TP506	3F
C449	3D	CR516	2D	R406	1F	R473	3C	R541	2D	TP517	1D
C461	3C	CR517	1D	R407	4F	R474	3C	R542	2D	TP560	1C
C465	4C	CR526	3E	R413	4F	R475	4A	R543	2D	TP571	2C
C467	4C	CR527	3F	R414	4F	R476	3B	R546	2D	TP582	1D
C476	4B	CR529	2E	R423	4D	R477	3B	R549	2D		
C491	2F	CR543	2D	R424	3F	R479	4B	R557	1C	U408	4F
C492	2F	CR551	1D	R425	2F	R481	4B	R558	1C	U412	4G
C497	2F	CR552	1D	R426	3F	R482	4A	R559	1C	U430	5D
C498	2F	CR554	1C	R427	4D	R483	4B	R562	1B	U446	3C
C506	3F	CR574	2C	R429	4D	R484	1E	R563	2B	U466	4B
C508	3D	CR581	1D	R431	4C	R486	1E	R566	1C	U491	3F
C509	3D	CR599	2E	R432	4C	R488	4B	R567	2C	U506	3E
C511	3D			R433	4D	R491	2F	R571	2C	U523	2F
C512	3D	J600	5C	R436	4C	R496	2G	R574	2D	U571	2C
C521	2E			R437	4C	R497	2F	R578	1E	U439	3D
C522	2E	L409	4F	R438	4D	R509	3E	R581	1D		
C527	3E			R439	4C	R511	4D	R582	1D	VR549	2D
C533	2E	P462	3E	R441	3D	R512	3D	R586	4B		
C543	2E			R446	3C	R514	2D	R587	4A		
C567	2C	Q406	1F	R447	3C	R516	2D	R591	3B		
C571	2C	Q461	3C	R449	3D	R517	2D	R592	3B		
C574	3C	Q474	4C	R452	3D	R521	2E	R593	3B		
C579	2E	Q491	3G	R454	3D	R523	3F	R594	3B		

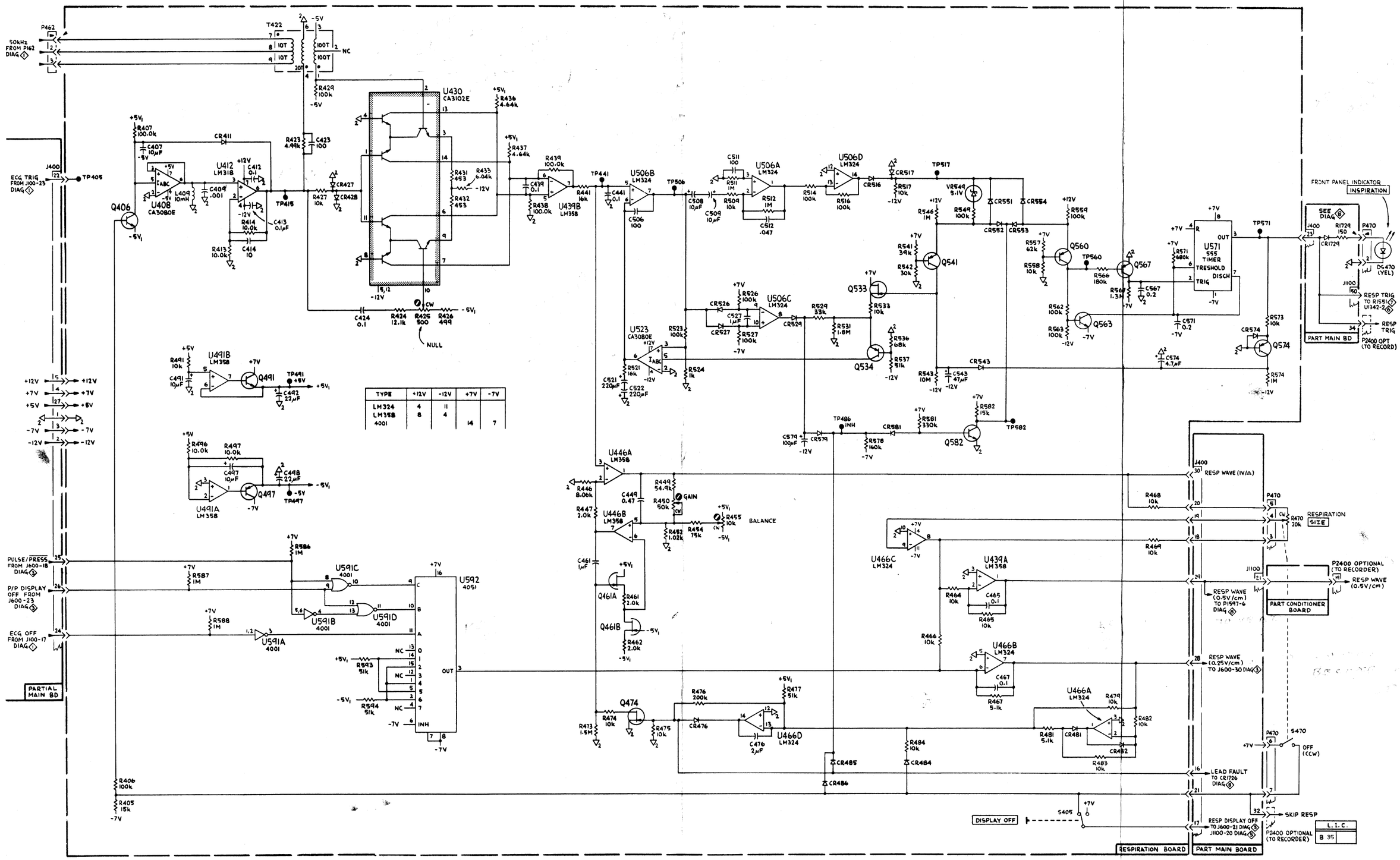

TYPE	+12V	-12V	+7V	-7V
LM324	4	11		
LM358	8	4		
4001			14	7

RESPIRATION 2

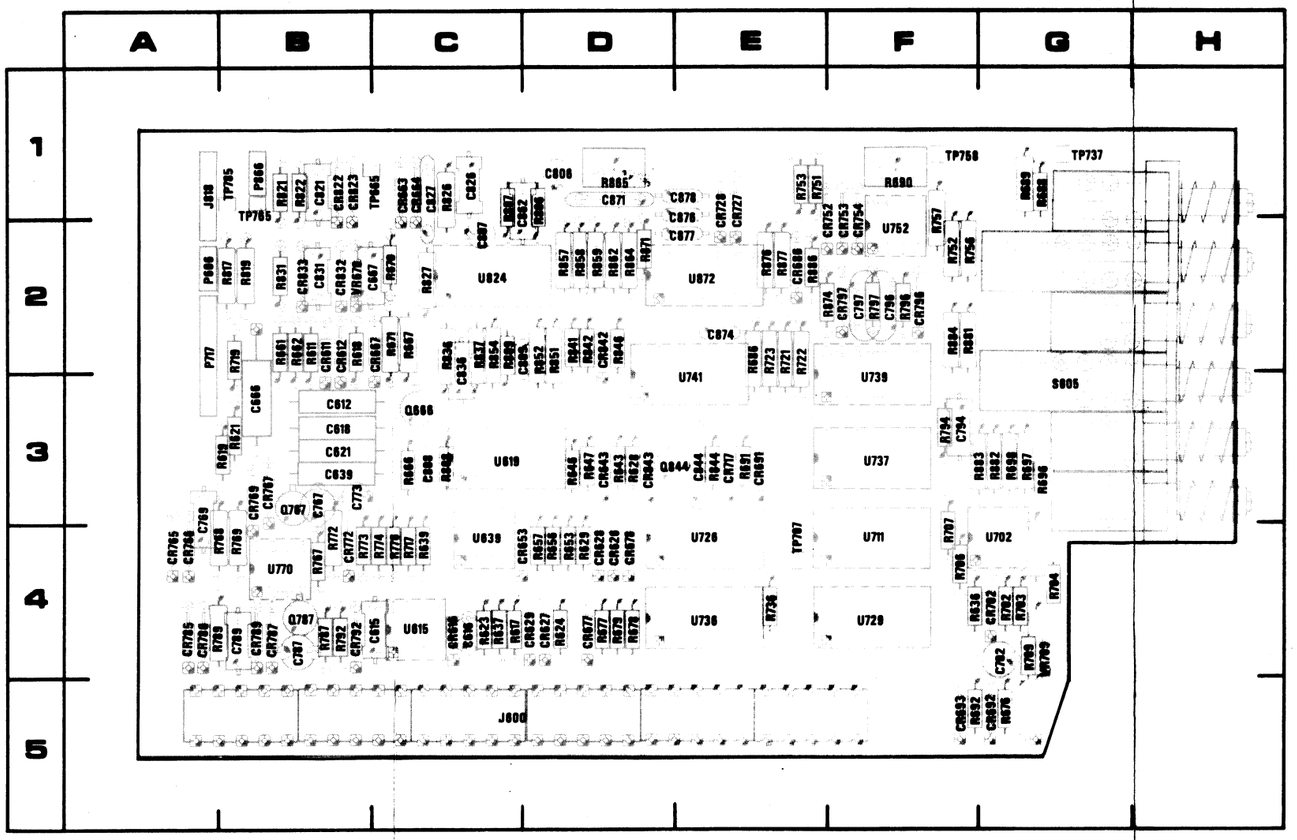

A3—Pressure/Pulse board components.

CKT NO	GRID COORD	CKT NO	GRID COORD	CKT NO	GRID COORD	CKT NO	GRID COORD	CKT NO	GRID COORD
C612	3B	CR667	2B	R611	2B	R719	2B	R862	2D
C615	4B	CR677	4D	R617	4C	R721	2E	R864	2D
C616	4C	CR678	4D	R618	2B	R723	2E	R865	1D
C618	3B	CR686	2E	R619	3B	R736	4E	R871	2D
C621	3B	CR691	3E	R621	3B	R751	1E	R874	2E
C639	3B	CR692	5G	R622	2B	R752	2F	R876	2E
C666	3B	CR693	5F	R623	4C	R753	1E	R877	2E
C667	2B	CR702	4G	R624	4D	R756	2F	R881	2F
C702	4G	CR717	3E	R628	3D	R757	1F	R882	3G
C767	3B	CR727	1E	R629	4D	R767	4B	R883	3F
C769	3A	CR728	1E	R636	4F	R768	4A	R884	2F
C773	3B	CR752	1E	R637	4C	R769	4B	R886	2E
C787	4B	CR753	1F	R639	4C	R772	4B		
C789	4B	CR754	1F	R643	3D	R773	4B	S605	3G
C794	3F	CR765	4A	R646	3D	R774	4C		
C796	2F	CR766	4A	R647	3D	R776	4C	TP665	1C
C797	2F	CR767	3B	R653	4D	R787	4B	TP707	4E
C806	1D	CR769	3B	R656	4D	R789	4A	TP737	1G
C807	2C	CR772	4B	R657	4D	R792	4B	TP758	1F
C808	3C	CR785	4A	R661	2B	R794	3F	TP765	1B
C809	2C	CR786	4A	R662	2B	R796	2F	TP785	1B
C821	1B	CR787	4B	R666	3C	R797	2F		
C826	1C	CR789	4B	R667	2C	R806	1D	U615	4C
C827	1C	CR792	4B	R670	2C	R807	1C	U619	3C
C831	2B	CR796	2F	R671	2C	R808	3C	U639	4C
C836	2C	CR797	2F	R676	5G	R809	2C	U702	4G
C844	3E	CR822	1B	R677	4D	R817	2B	U711	4F
C862	1C	CR823	1B	R678	4D	R819	2B	U726	4E
C871	1D	CR832	2B	R679	4D	R821	1B	U729	4F
C874	2E	CR833	2B	R686	2E	R822	1B	U736	4E
C876	1E	CR842	2D	R688	1G	R826	1C	U737	3F
C877	2E	CR843	3D	R689	1G	R827	2C	U739	3F
C878	1E			R690	1F	R831	2B	U741	3E
		J600	5C	R691	3E	R836	2C	U752	2F
CR611	2B	J818	1A	R692	5F	R837	2C	U770	4B
CR612	2B			R696	3G	R841	2D	U824	2C
CR616	4C	P606	2A	R697	3G	R842	2D	U872	2E
CR626	4D	P717	2A	R698	3G	R844	3E		
CR627	4D	P866	1B	R702	4G	R846	2D	VR670	2B
CR628	4D			R703	4G	R851	2D	VR709	4G
CR629	4D			R704	4G	R852	2D		
CR643	3D	Q666	3C	R706	4F	R854	2C		
CR653	4C	Q767	3B	R707	4F	R857	2D		
CR663	1C	Q787	4B	R709	4G	R858	2D		
CR664	1C	Q844	3D	R717	4C	R859	2D		

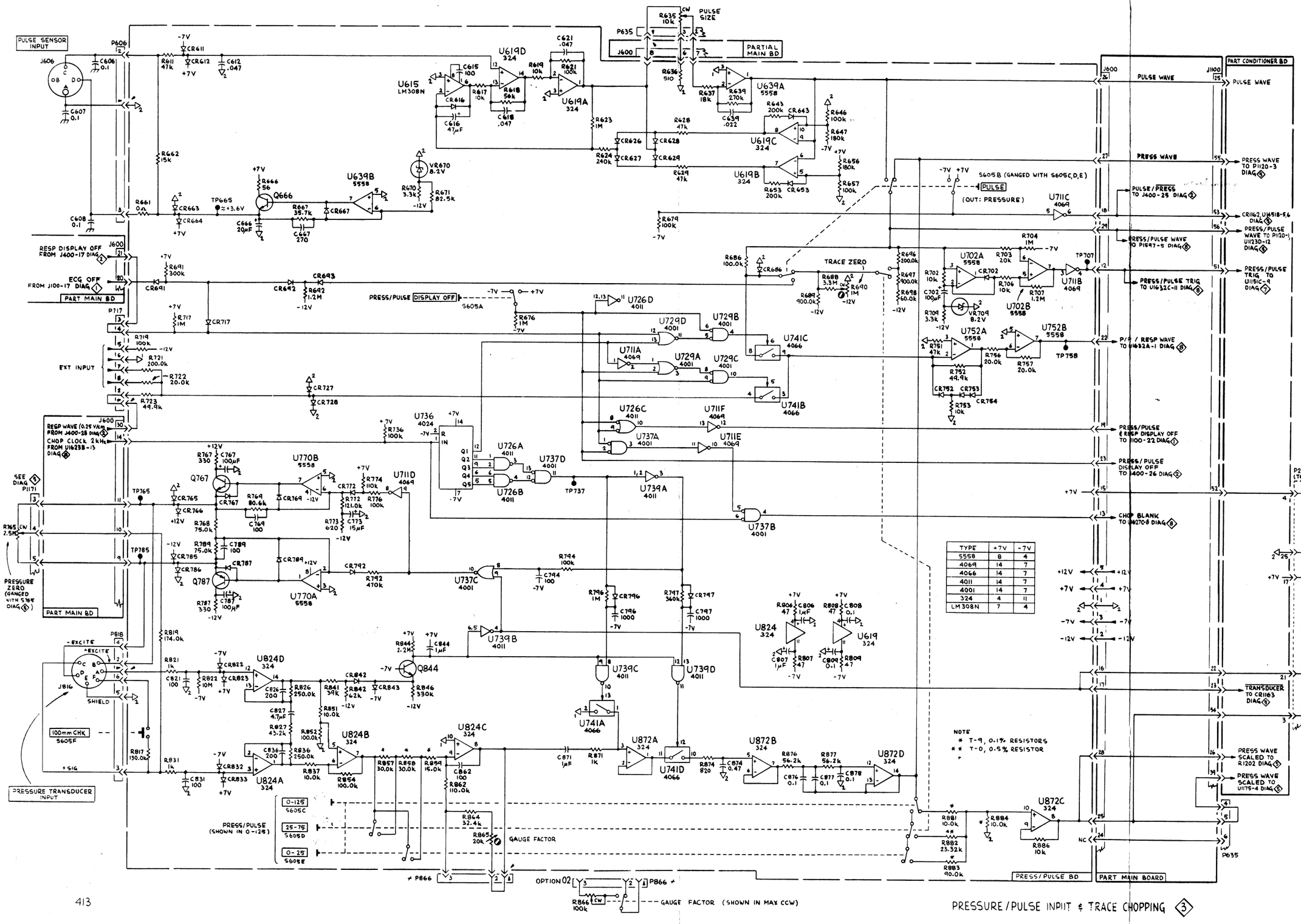

TYPE	+7V	-7V
5558	8	4
4069	14	7
4066	14	7
4011	14	7
4001	14	7
324	4	11
LM308N	7	4

PRESSURE/PULSE INPUT & TRACE CHOPPING 3

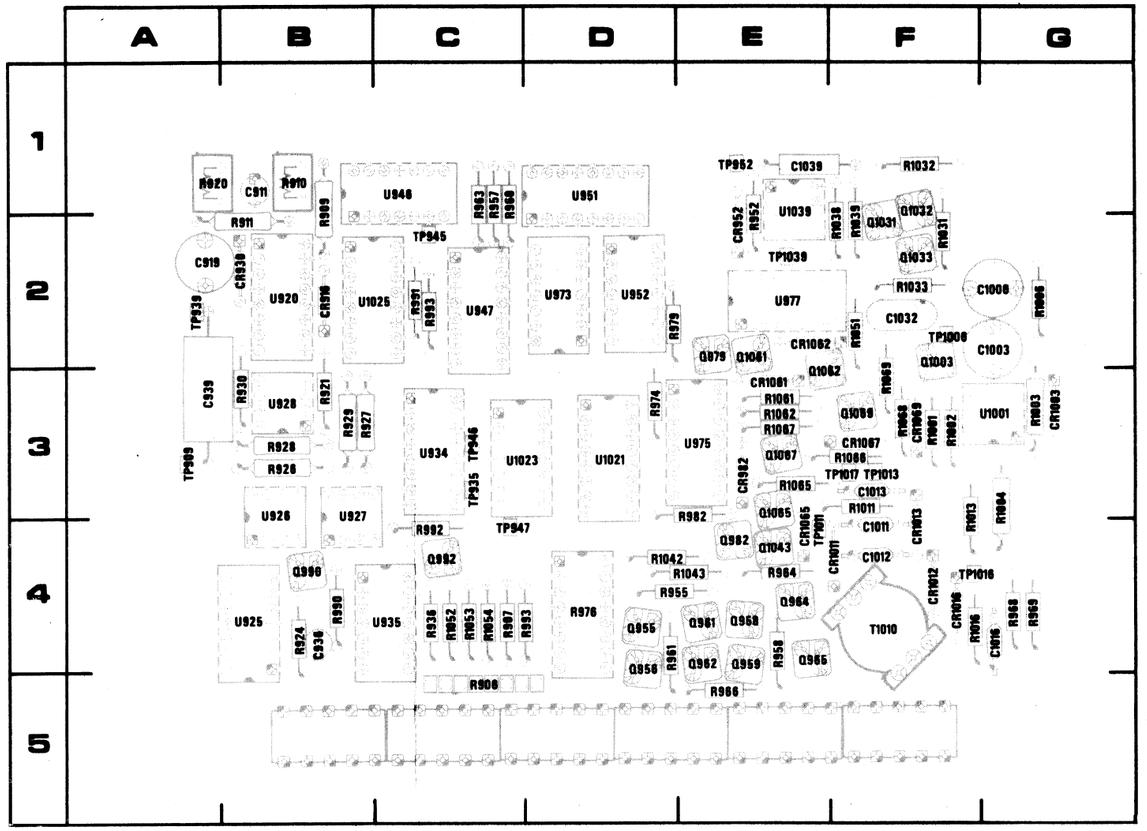

A4—DVM board components.

CKT NO	GRID COORD	CKT NO	GRID COORD	CKT NO	GRID COORD	CKT NO	GRID COORD	CKT NO	GRID COORD	CKT NO	GRID COORD
C911	1B	CR1069	3F	R907	4C	R974	3D	R1043	4D	TP1016	4F
C919	2A			R909	1B	R976	4D	R1051	2F	TP1017	3F
C936	4B	Q955	4D	R910	1B	R979	2D	R1052	4C	TP1039	2E
C939	3A	Q956	4D	R911	2B	R982	3E	R1053	4C		
C1003	2G	Q958	4E	R920	1A	R990	4B	R1054	4C	U920	2B
C1006	2G	Q959	4E	R921	3B	R991	2C	R1061	3E	U925	4B
C1011	4F	Q961	4E	R924	4B	R992	4C	R1062	3E	U926	3B
C1012	4F	Q962	4E	R926	3B	R993	2C	R1065	3E	U927	3B
C1013	3F	Q964	4E	R927	3B	R993	4C	R1066	3F	U928	3B
C1016	4G	Q965	4E	R928	3B	R1001	3F	R1067	3E	U934	3C
C1032	2F	Q979	2E	R929	3B	R1002	3F	R1068	3F	U935	4C
C1039	1E	Q982	4E	R930	3B	R1003	3G	R1069	3F	U946	1C
		Q990	4B	R936	4C	R1004	3G			U947	2C
CR930	2B	Q992	4C	R952	2E	R1006	2G	T1010	4F	U951	1C
CR952	2E	Q1003	2F	R955	4D	R1011	3F	TP909	3A	U952	2D
CR982	3E	Q1032	1F	R957	1C	R1013	3F	TP935	3C	U973	2D
CR1003	3G	Q1033	2F	R958	4E	R1016	4F	TP939	2A	U975	3E
CR1011	4F	Q1043	4E	R960	1C	R1031	2F	TP945	2C	U977	2E
CR1012	4F	Q1061	2E	R961	4D	R1032	1F	TP946	3C	U1001	3G
CR1013	4F	Q1065	3E	R963	1C	R1033	2F	TP947	4C	U1021	3D
CR1016	4F	Q1067	3E	R964	4E	R1038	2F	TP952	1E	U1023	3C
CR1061	3E	Q1069	3F	R966	5E	R1039	2F	TP1006	2F	U1025	2B
CR1062	2E			R968	4G	R1039	2F	TP1013	3F	U1039	1E
CR1067	3F	R906	5C	R969	4G	R1042	4D				

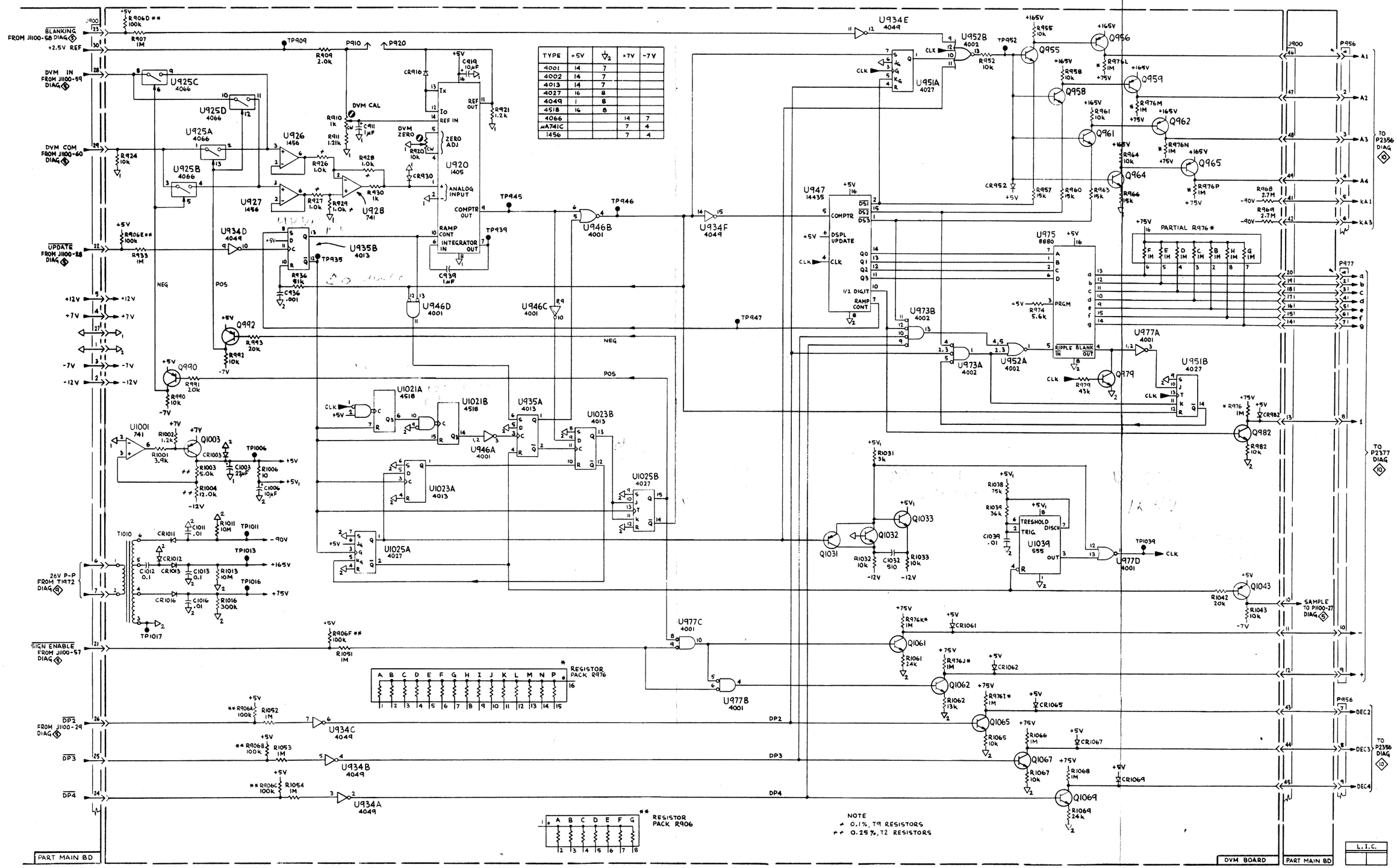

TYPE	+5V	½	+7V	-7V
4001	14	7		
4002	14	7		
4013	14	7		
4027	16	8		
4049	1	8		
4518	16	8		
4066			14	7
uA741C			7	4
1456			7	4

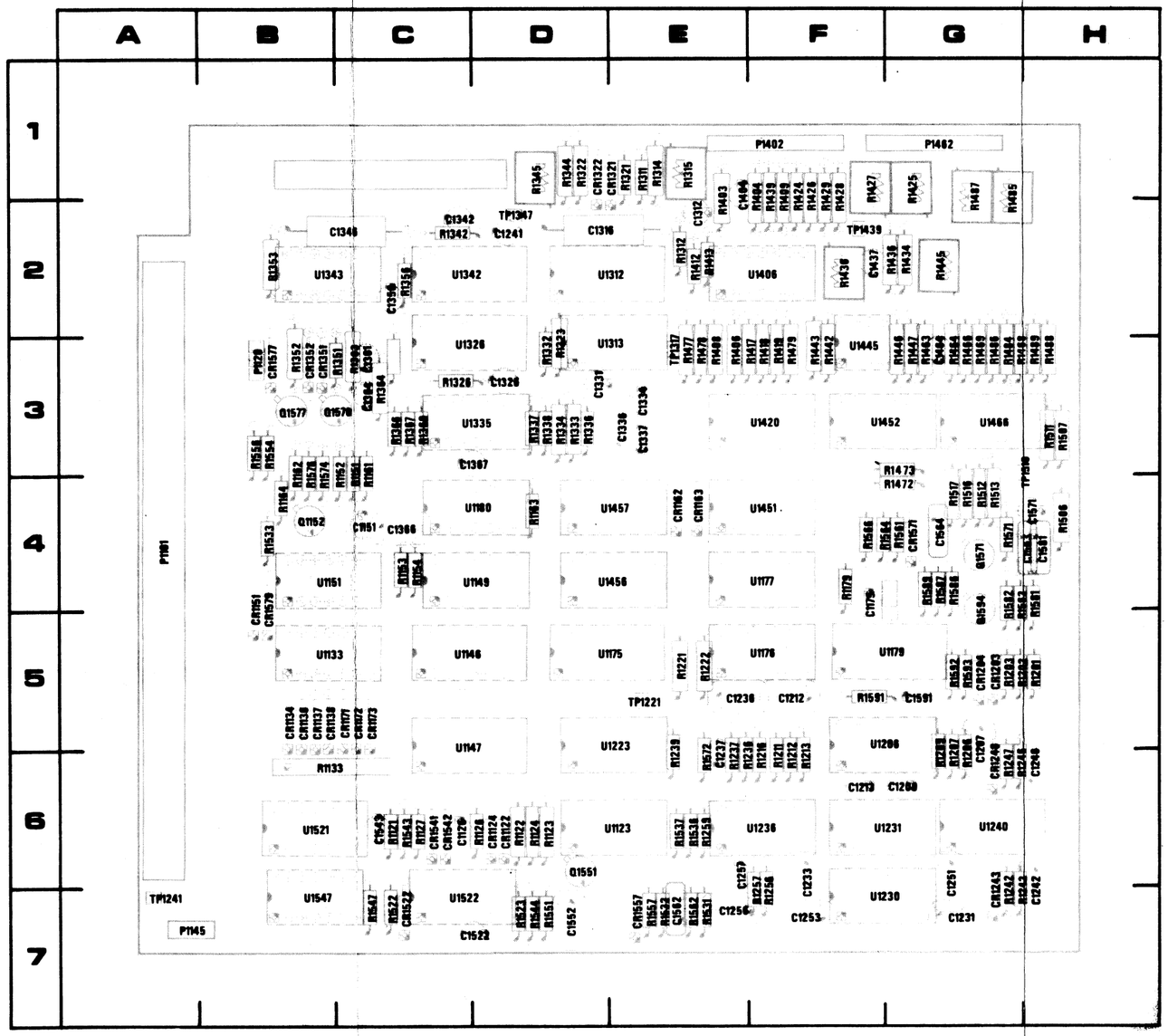

A5—Conditioner board components.

CKT NO	GRID COORD	CKT NO	GRID COORD	CKT NO	GRID COORD	CKT NO	GRID COORD	CKT NO	GRID COORD
C1126	6C	CR1172	5C	R1212	5F	R1428	1F	R1574	3B
C1151	4C	CR1173	5C	R1213	5F	R1429	1F	R1576	3B
C1179	4F	CR1203	5G	R1216	5F	R1434	2G	R1581	4H
C1207	5G	CR1204	5G	R1221	5E	R1436	2F	R1582	4G
C1209	6G	CR1243	6G	R1222	5E	R1436	2G	R1586	4G
C1212	5F	CR1248	6G	R1236	5E	R1439	1F	R1587	4G
C1213	6F	CR1321	1E	R1237	5E	R1442	3F	R1589	4G
C1231	7G	CR1322	1D	R1239	5E	R1443	3F	R1591	5F
C1233	6F	CR1351	3B	R1242	6G	R1445	2G	R1592	5G
C1236	5E	CR1352	3B	R1243	6G	R1446	3G	R1593	5G
C1237	5E	CR1522	7C	R1246	6G	R1447	3G		
C1241	2C	CR1541	6C	R1247	6G	R1463	3G	TP1221	5E
C1242	6H	CR1542	6C	R1256	7F	R1464	3G	TP1241	7A
C1246	6H	CR1557	7E	R1257	7F	R1466	3G	TP1317	3E
C1251	6G	CR1571	4G	R1259	6E	R1468	3G	TP1347	2D
C1253	7F	CR1577	3B	R1311	1E	R1469	3G	TP1439	2F
C1256	7E	CR1579	4B	R1312	2E	R1472	4G	TP1510	3H
C1257	6E			R1314	1E	R1473	3G		
C1312	2E	P1101	4A	R1315	1E	R1477	3E	U1123	6E
C1316	2D	P1120	3B	R1321	1E	R1478	3E	U1133	5B
C1326	3D	P1145	7A	R1322	1D	R1479	3F	U1146	5C
C1331	3D	P1402	1F	R1323	3D	R1484	3G	U1147	5C
C1334	3E	P1462	1G	R1326	3C	R1485	1G	U1149	4D
C1336	3E			R1332	3D	R1486	3G	U1151	4B
C1337	3E	Q1152	4B	R1333	3D	R1487	1G	U1175	5E
C1342	2C	Q1346	2C	R1334	3D	R1488	3H	U1176	5F
C1356	2C	Q1551	6D	R1336	3D	R1489	3H	U1177	4F
C1361	3C	Q1571	4G	R1337	3D	R1506	4H	U1179	5G
C1364	3C	Q1576	3C	R1338	3D	R1507	3H	U1180	4D
C1366	4C	Q1577	3B	R1342	2C	R1511	3H	U1206	5F
C1367	3D	Q1594	4G	R1344	1D	R1512	4G	U1223	5E
C1404	1E			R1345	1D	R1513	4G	U1230	7G
C1437	2F	R1121	6C	R1351	3C	R1516	4G	U1231	6G
C1464	3G	R1122	6D	R1352	3B	R1517	4G	U1236	6F
C1522	7D	R1123	6D	R1353	2B	R1522	7C	U1240	6G
C1543	6C	R1124	6D	R1356	2C	R1523	7D	U1312	2D
C1552	7D	R1126	6D	R1363	3C	R1531	7E	U1313	3D
C1562	7E	R1127	6C	R1364	3C	R1532	7E	U1326	3C
C1563	4H	R1133	6B	R1366	3C	R1533	4B	U1335	3D
C1564	4G	R1151	3C	R1367	3C	R1536	6E	U1342	2C
C1564	4G	R1152	3C	R1368	3C	R1537	6E	U1343	2B
C1571	4H	R1153	4C	R1403	2E	R1543	6C	U1406	2F
C1581	4H	R1154	4C	R1404	1F	R1544	7D	U1420	3F
C1591	5G	R1161	3C	R1406	3E	R1547	7C	U1445	3F
		R1162	3B	R1408	3E	R1551	7D	U1451	4F
CR1122	6D	R1163	4D	R1409	1F	R1554	3B	U1452	3F
CR1124	6D	R1164	4B	R1412	2E	R1556	3B	U1456	4E
CR1134	5B	R1179	4F	R1413	2E	R1557	7E	U1457	4E
CR1136	5B	R1201	5H	R1417	3F	R1561	4G	U1466	3G
CR1137	5B	R1202	5G	R1418	3F	R1562	7E	U1521	6B
CR1138	5B	R1203	5G	R1419	3F	R1563	4G	U1522	7C
CR1151	4B	R1206	5G	R1424	1F	R1564	4F	U1547	7B
CR1162	4E	R1207	5G	R1425	1G	R1566	4F		
CR1163	4E	R1209	5G	R1426	1F	R1571	4G		
CR1171	5C	R1211	5F	R1427	1F	R1572	5E		

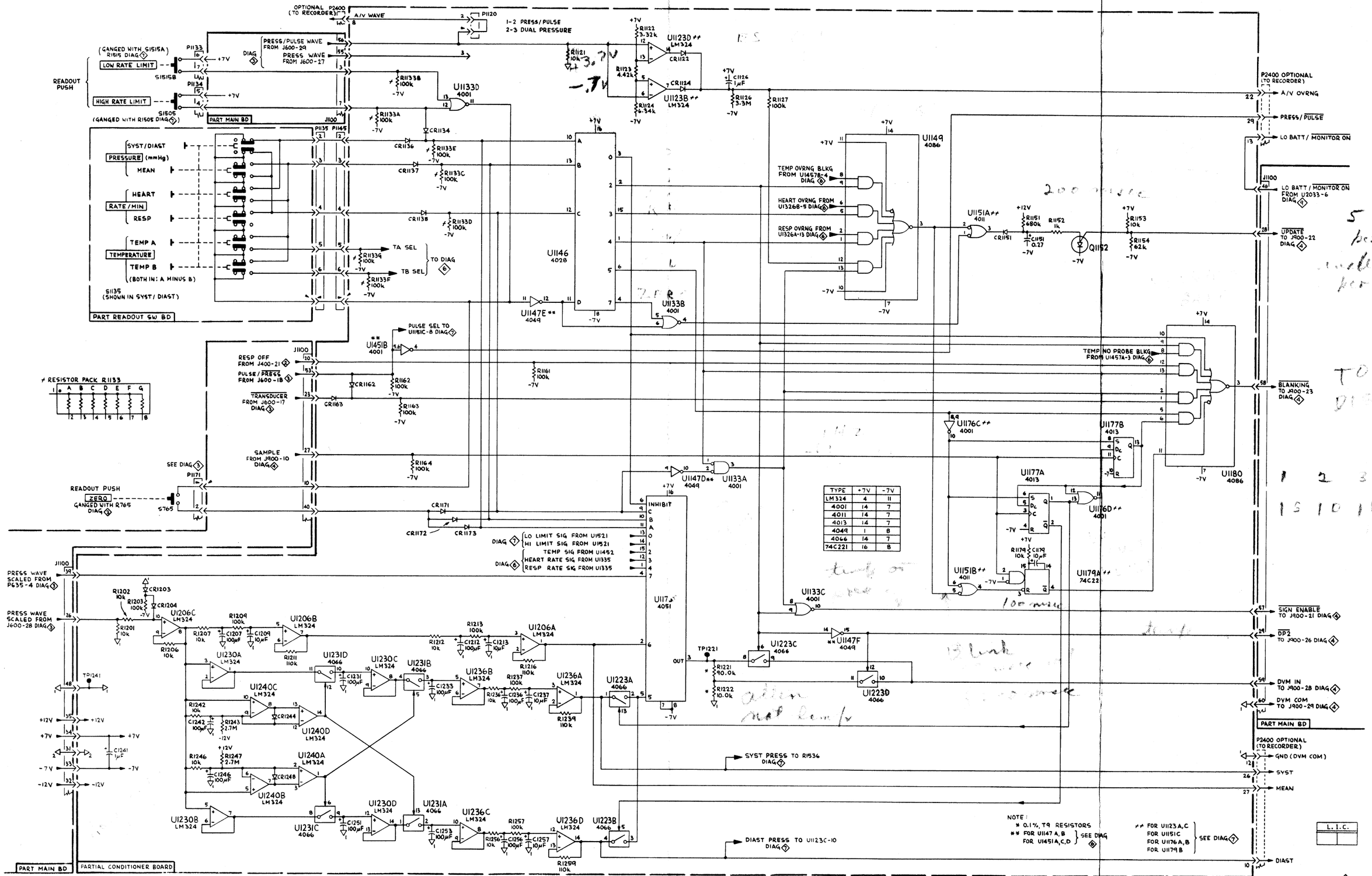

TYPE	+7V	-7V
LM324	4	11
4001	14	7
4011	14	7
4013	14	7
4049	1	8
4066	14	7
74C221	16	8

READOUT SWITCHING AND PRESSURE CONVERTERS 5

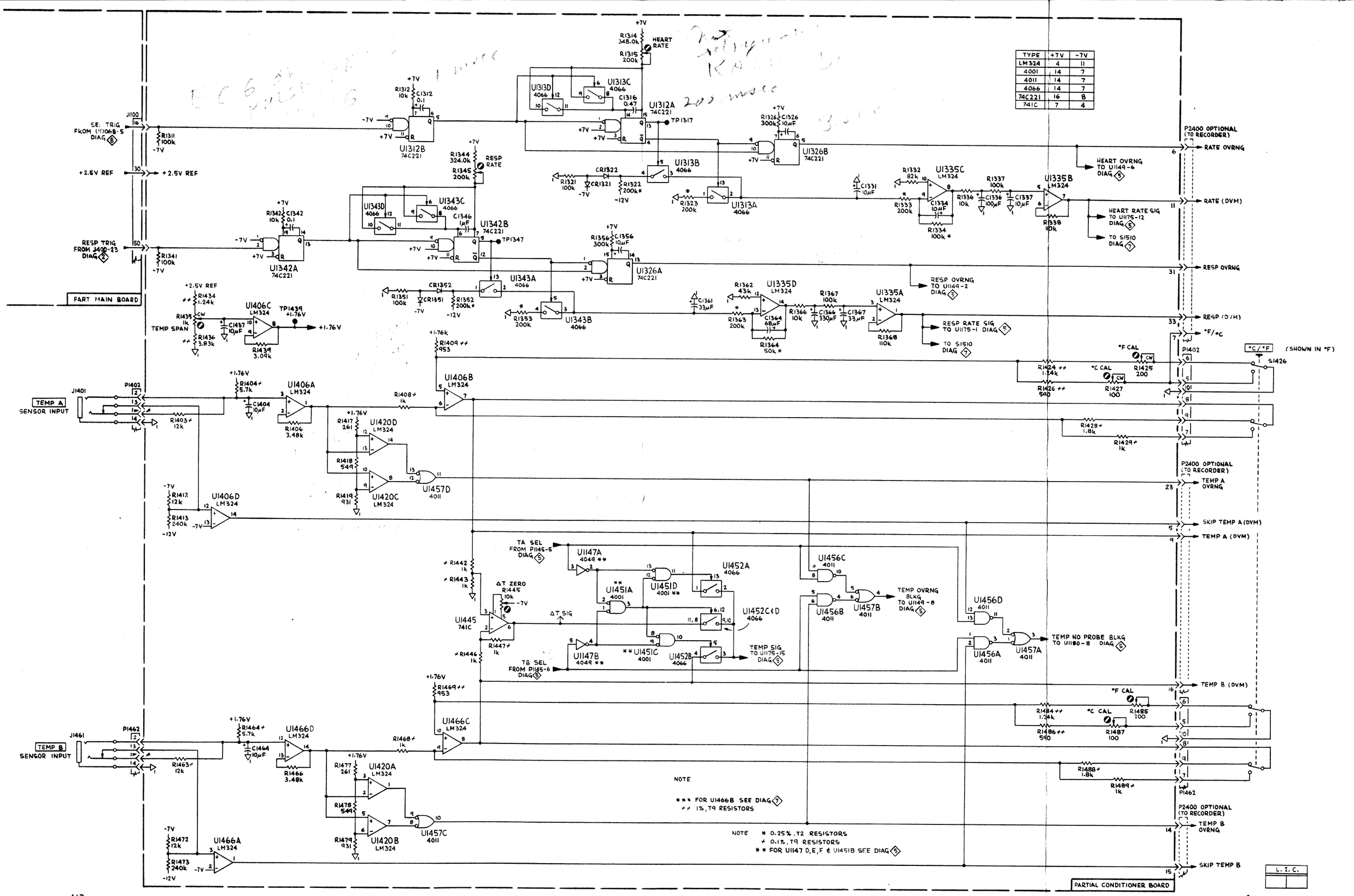

TYPE	+7V	-7V
LM324	4	11
4001	14	7
4011	14	7
4066	14	7
74C221	16	8
741C	7	4

TEMPERATURE AND RATE CONVERTERS 6

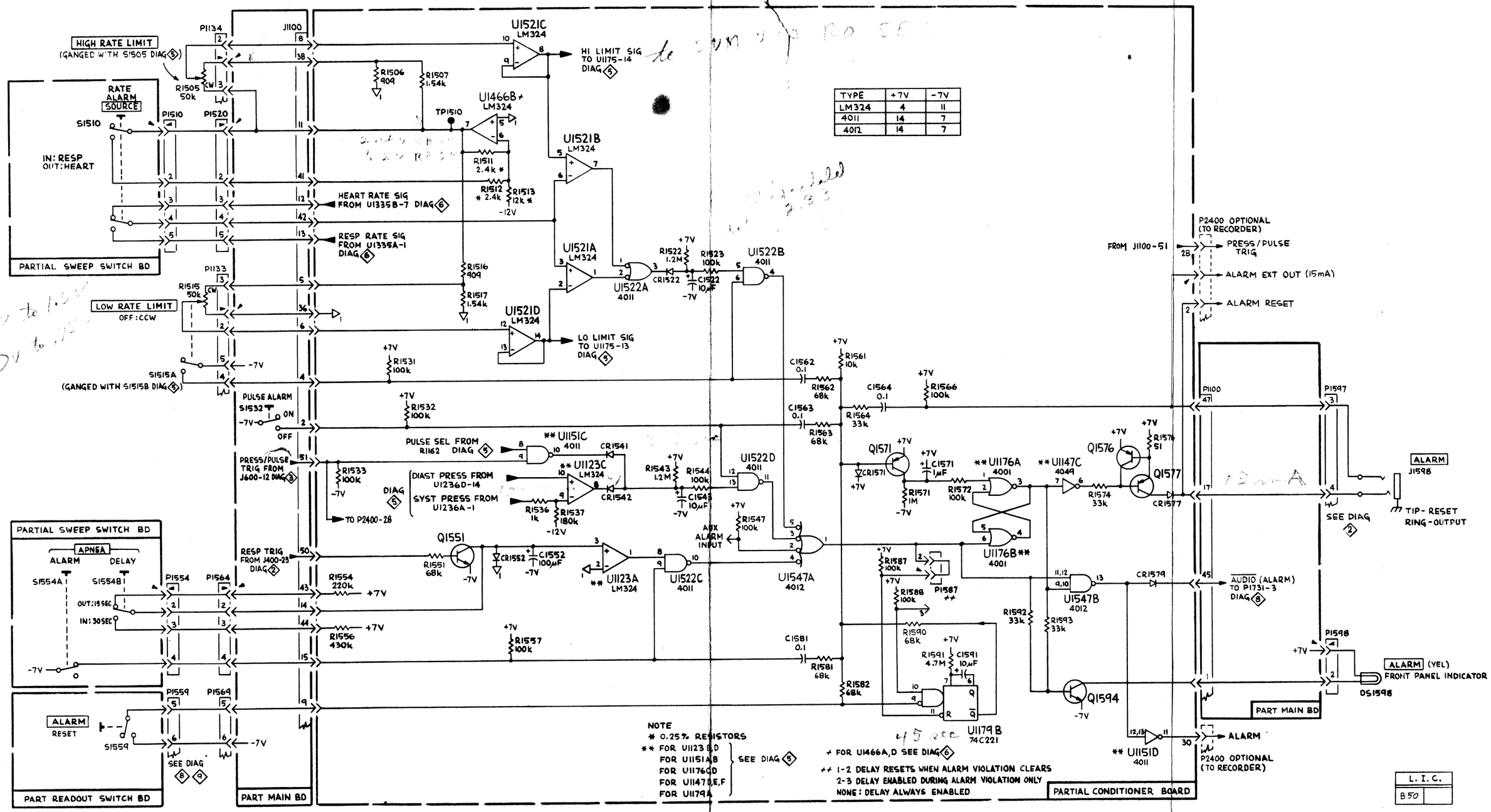

TYPE	+7V	-7V
LM324	4	11
4011	14	7
4012	14	7

L.I.C.	
B50	

RATE, PULSE AND APNEA ALARMS 7

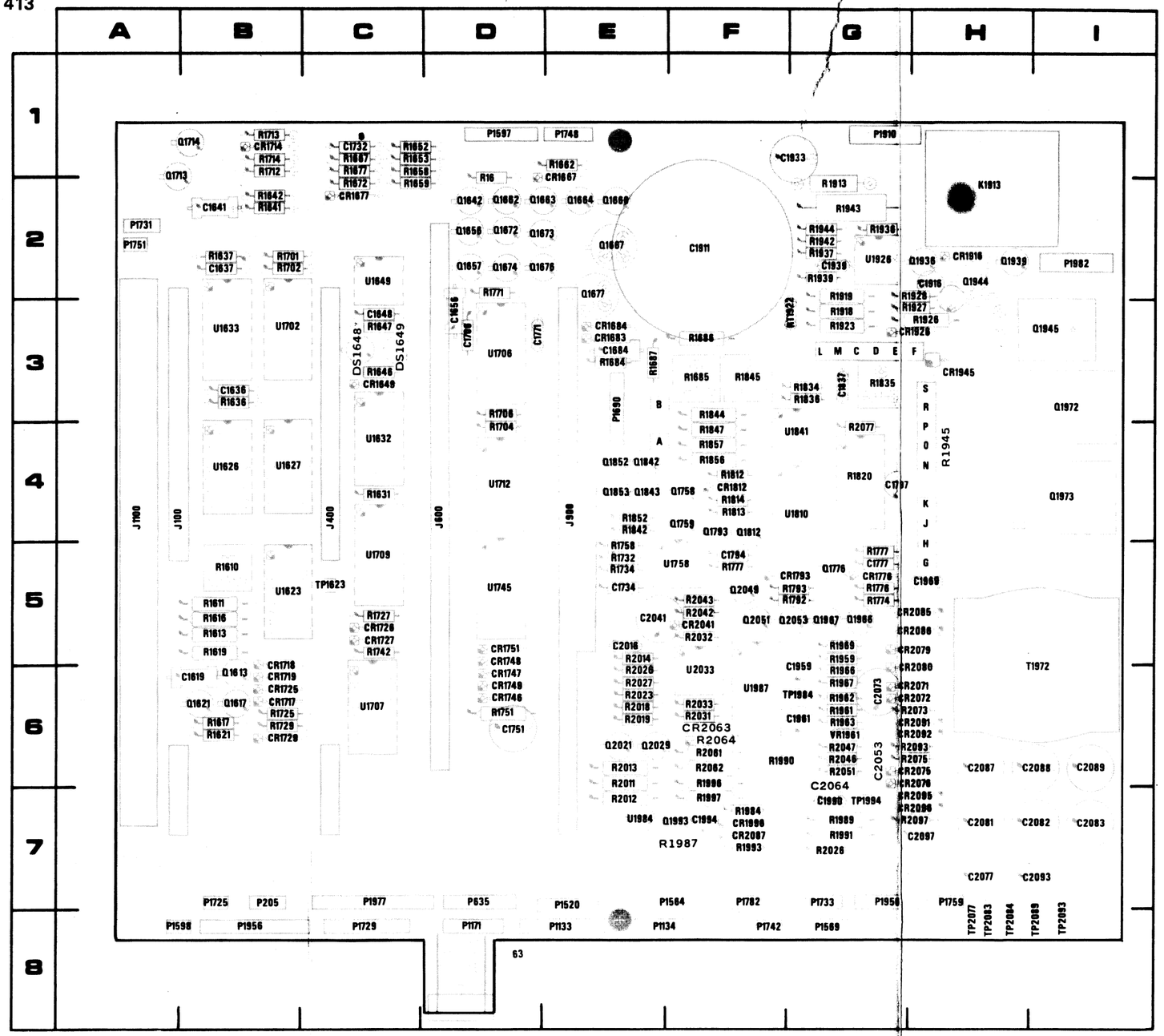

A6—Main board components.

CKT NO	GRID COORD	CKT NO	GRID COORD	CKT NO	GRID COORD	CKT NO	GRID COORD	CKT NO	GRID COORD	CKT NO	GRID COORD	CKT NO	GRID COORD	CKT NO	GRID COORD	CKT NO	GRID COORD
C1619	6B	C1684	3E	C1777	5G	C1939	2G	C2016	5E	C2077	7H	C2089	6I	CR1677	2C	CR1725	6B
C1636	3B	C1706	3D	C1794	5F	C1959	6G	C2041	5E	C2081	7H	C2093	7I	CR1683	3E	CR1726	5C
C1637	2B	C1732	1C	C1797	4G	C1961	6G	C2053	6G	C2082	7I	C2097	7H	CR1714	1B	CR1727	5C
C1641	2B	C1734	5E	C1911	2F	C1969	5H	C2064	6G	C2083	7I			CR1717	6B	CR1729	6B
C1648	3C	C1751	6D	C1916	2H	C1990	7G	C2073	6G	C2087	6H	CR1649	3C	CR1718	6B	CR1746	6D
C1656	3D	C1771	3D			C1994	7F			C2088	6I	CR1667	1E	CR1719	6B	CR1747	6D

CKT NO	GRID COORD	CKT NO	GRID COORD	CKT NO	GRID COORD	CKT NO	GRID COORD
CR1748	5D			R1685	3F	R1997	7F
CR1749	6D			R1686	3F	R2011	6E
CR1751	5D	Q1656	2D	R1687	3E	R2012	7E
CR1776	5G	Q1657	2D	R1701	2B	R2013	6E
CR1793	5G	Q1662	2D	R1702	2B	R2014	5E
CR1812	4F	Q1663	2D	R1704	4D	R2018	6E
CR1837	3G	Q1664	2E	R1706	3D	R2019	6E
CR1864	3E	Q1666	2E	R1712	1B	R2023	6E
CR1916	2H	Q1667	2E	R1713	1B	R2026	6E
CR1926	3H	Q1672	2D	R1714	1B	R2026	7G
CR1945	3H	Q1673	2D	R1725	6B	R2027	6E
CR1996	7F	Q1674	2D	R1727	5C	R2031	6F
CR2041	5F	Q1676	2D	R1729	6B	R2032	5F
CR2063	6F	Q1677	2E	R1732	5E	R2033	6F
CR2071	6H	Q1713	1A	R1734	5E	R2042	5F
CR2072	6H	Q1714	1B	R1742	5C	R2043	5F
CR2075	6H	Q1751	2A	R1751	6D	R2046	6G
CR2076	6H	Q1758	4F	R1758	5E	R2047	6G
CR2079	5H	Q1759	4F	R1771	2D	R2051	6G
CR2080	6H	Q1776	5G	R1774	5G	R2061	6F
CR2085	5H	Q1793	4F	R1776	5G	R2064	6F
CR2086	5H	Q1812	4F	R1777	5F	R2062	6F
CR2087	7F	Q1842	4E	R1777	5G	R2073	6H
CR2091	6H	Q1843	4E	R1792	5G	R2075	6H
CR2092	6H	Q1852	4E	R1793	5G	R2077	4G
CR2095	7H	Q1853	4E	R1812	4F	R2092	6H
CR2096	6H	Q1936	2H	R1813	4F	R2097	7H
DS1648	3C	Q1939	2H	R1814	4F		
DS1649	3C	Q1944	2H	R1820	4G	RT1922	3G
J100	4A	Q1945	3I	R1834	3G		
J400	4C	Q1966	5G	R1835	3G	S1532	8D
J600	4D	Q1967	5G	R1836	3G		
J900	4E	Q1972	3I	R1842	4E	TP1623	5C
J1100	4A	Q1973	4I	R1844	3F	TP1972	6I
K1913	2H	Q1993	7F	R1845	3F	TP1984	6G
		Q2021	6E	R1847	4F	TP1994	7G
P205	7B	Q2029	6E	R1852	4E	TP2077	8H
P635	7D	Q2049	5F	R1856	4F	TP2083	8H
P1133	8E	Q2051	5F	R1857	4F	TP2084	8H
P1134	7F	Q2053	5G	R1913	2G	TP2089	8I
P1171	8D			R1918	3G	TP2093	8I
P1520	7E	R16	1D	R1919	2G		
P1564	7F	R1610	5B	R1923	3G	U1623	5B
P1569	8G	R1611	5B	R1926	3H	U1626	4B
P1597	1D	R1613	5B	R1927	3H	U1627	4B
P1598	8A	R1616	5B	R1928	2H	U1632	4C
P1690	3E	R1617	6B	R1936	2G	U1633	3B
P1725	7B	R1619	5B	R1937	2G	U1649	2C
P1729	7C	R1621	6B	R1939	2G	U1702	3B
P1731	2A	R1631	4C	R1942	2G	U1706	3D
P1733	7G	R1636	3B	R1943	2G	U1707	6C
P1742	8F	R1637	2B	R1944	2G	U1709	5C
P1748	1E	R1641	2B	R1945	4H	U1712	4D
P1759	7H	R1642	2B	R1959	5G	U1745	5D
P1782	7F	R1646	3C	R1961	6G	U1758	5F
P1910	1G	R1647	3C	R1962	6G	U1810	4G
P1956	7G	R1652	1C	R1963	6G	U1841	4G
P1956	8B	R1653	1C	R1966	6G	U1926	2G
P1977	7C	R1658	1C	R1967	6G	U1984	7E
P1982	2I	R1659	1C	R1969	5G	U1987	6F
		R1662	1E	R1984	7F	U2033	6F
Q1613	6B	R1667	1C	R1987	7F		
Q1617	6B	R1672	2C	R1989	7G	VR1961	6G
Q1621	6B	R1677	1C	R1990	6F		
Q1642	2D	R1684	3E	R1991	7G		
				R1993	7F		
				R1996	6F		

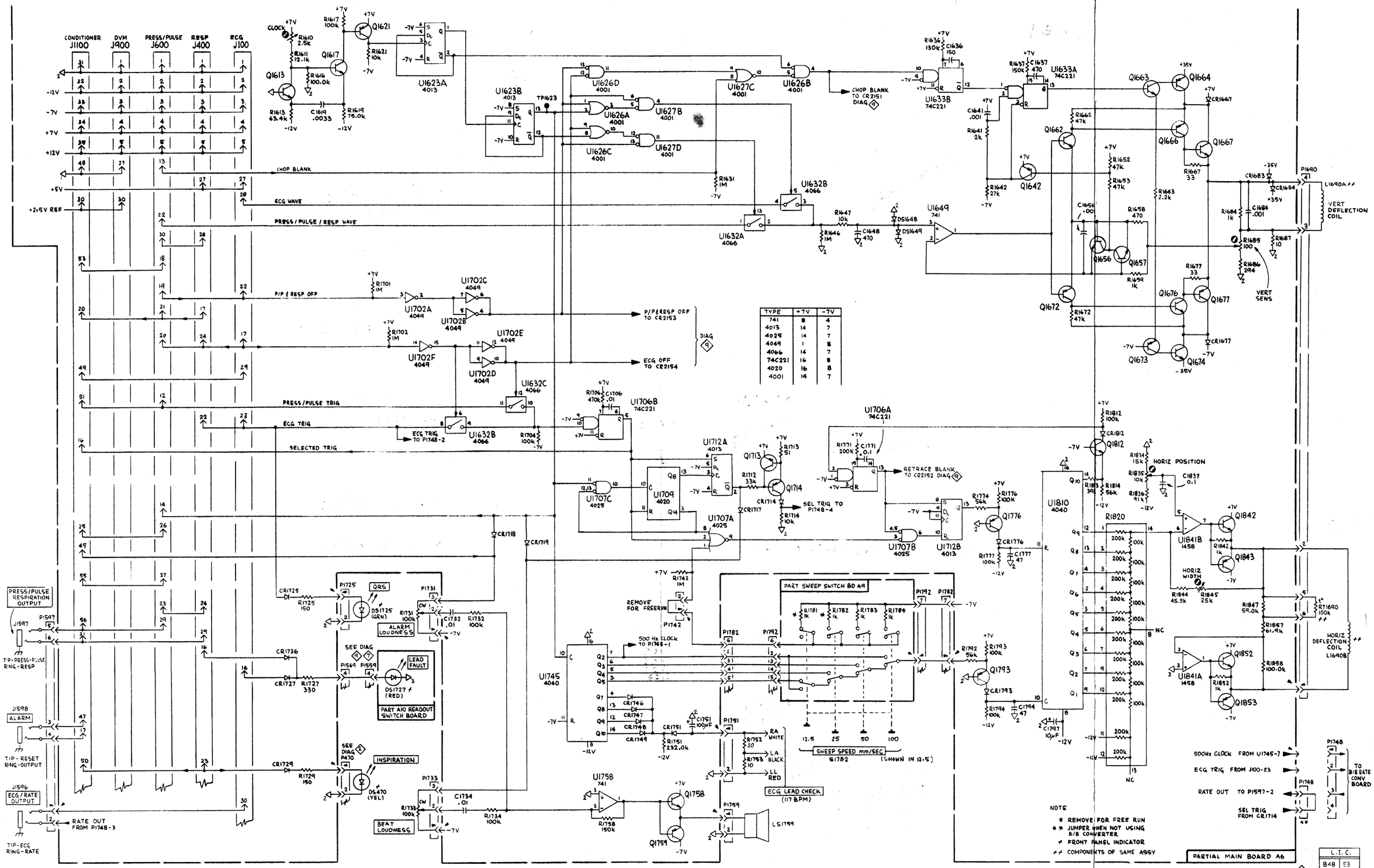

TYPE	+7V	-7V
741	8	4
4013	14	7
4025	14	7
4049	1	8
4066	14	7
74C221	16	8
4020	16	8
4001	14	7

HORIZ AND VERT AMPLIFIERS 8

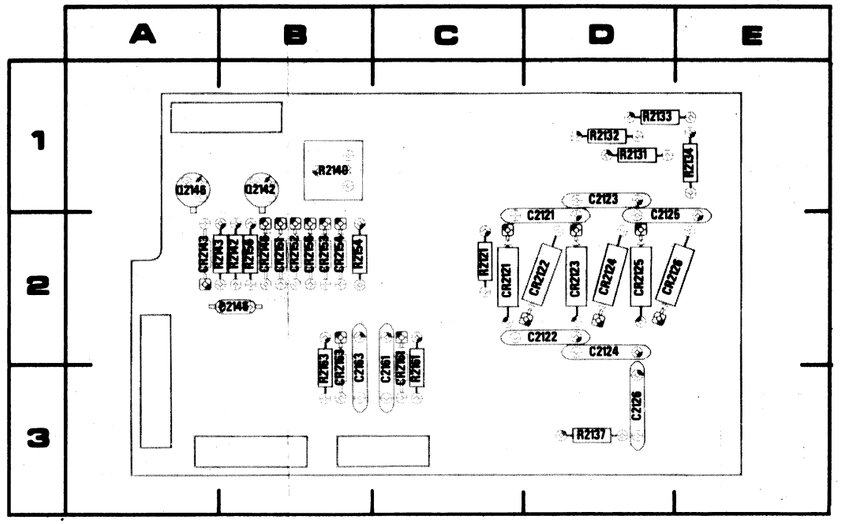

A7—High-Voltage Board components.

CKT NO	GRID COORD	CKT NO	GRID COORD	CKT NO	GRID COORD	CKT NO	GRID COORD
C2121	2D	CR2122	2D	CR2154	2B	R2133	1D
C2122	2D	CR2123	2D	CR2156	2B	R2134	1E
C2123	1D	CR2124	2D	CR2161	3C	R2137	3D
C2124	2D	CR2125	2D	CR2163	3B	R2140	1B
C2125	2D	CR2126	2D			R2142	2B
C2126	3D	CR2143	2A	Q2142	1B	R2143	2A
C2146	2B	CR2146	2B	Q2146	1A	R2154	2B
C2161	3C	CR2151	2B			R2156	2B
C2163	3B	CR2152	2B	R2121	2C	R2161	3C
		CR2153	2B	R2131	1D	R2163	3B
CR2121	2C			R2132	1D		

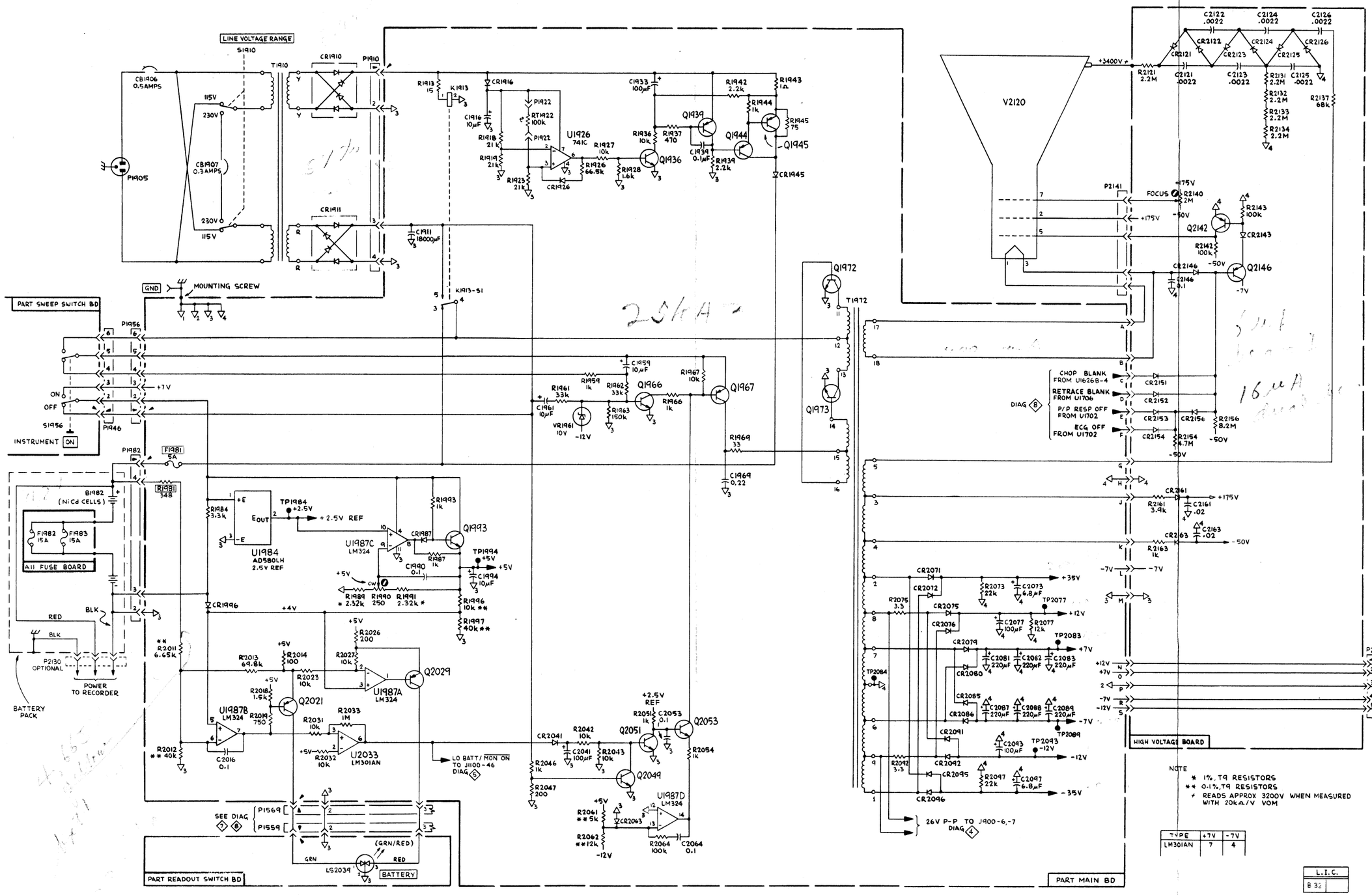

POWER SUPPLY AND CRT 9

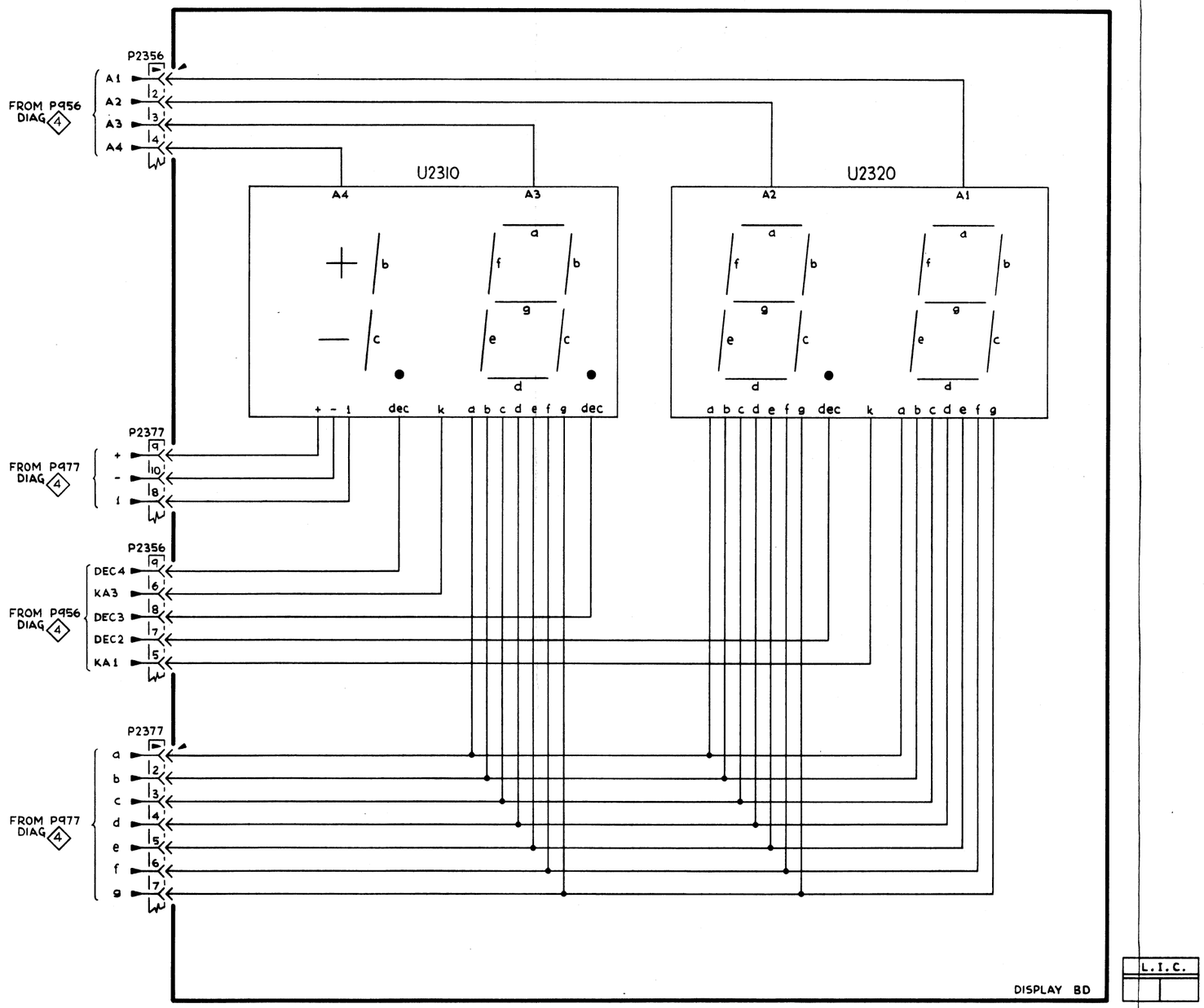
P2356
FROM P956 DIAG 4
A1
A2
A3
A4
U2310
U2320
+ - i dec k a b c d e f g dec
a b c d e f g dec k a b c d e f g
P2377
FROM P977 DIAG 4
+
-
i
P2356
FROM P956 DIAG 4
DEC4
KA3
DEC3
DEC2
KA1
P2377
FROM P977 DIAG 4
a
b
c
d
e
f
g
DISPLAY BD
L.I.C.

READOUT 10

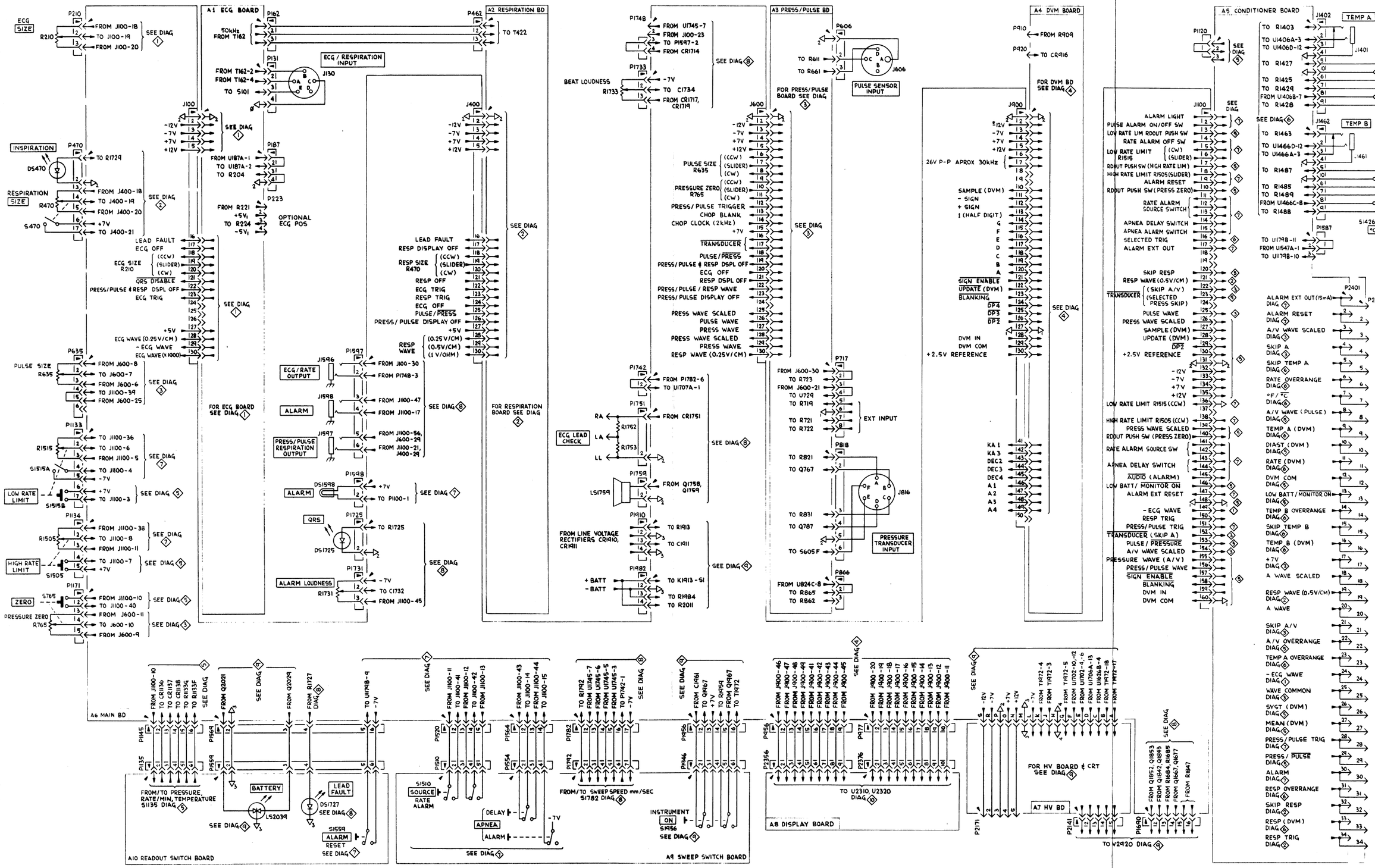
A1 ECG BOARD
A2 RESPIRATION BD
A3 PRESS/PULSE BD
A4 DVM BOARD
A5 CONDITIONER BOARD
A6 MAIN BD
A7 HV BD
A8 DISPLAY BOARD
A9 SWEEP SWITCH BOARD
A10 READOUT SWITCH BOARD
ECG SIZE
RESPIRATION SIZE
INSPIRATION
PULSE SIZE
LOW RATE LIMIT
HIGH RATE LIMIT
ZERO
PRESSURE ZERO
ECG / RESPIRATION INPUT
ECG/RATE OUTPUT
ALARM
PRESS/PULSE RESPIRATION OUTPUT
QRS
ALARM LOUDNESS
OPTIONAL ECG POS
PULSE SENSOR INPUT
PRESSURE TRANSDUCER INPUT
ECG LEAD CHECK
EXT INPUT
FOR ECG BOARD SEE DIAG 1
FOR RESPIRATION BOARD SEE DIAG 2
FOR PRESS/PULSE BOARD SEE DIAG 3
FOR DVM BD SEE DIAG 4
FOR HV BOARD & CRT SEE DIAG 9
TEMP A
TEMP B
BATTERY
LEAD FAULT
ALARM RESET
SOURCE RATE ALARM
APNEA
INSTRUMENT ON
FROM/TO PRESSURE, RATE/MIN, TEMPERATURE S1135 DIAG 5
FROM/TO SWEEP SPEED mm/SEC S1782 DIAG 8
TO U2310, U2320 DIAG 8
TO V2920 DIAG 9
ALARM EXT OUT (15mA) DIAG 1
ALARM RESET DIAG 1
A/V WAVE SCALED DIAG 3
SKIP A DIAG 3
SKIP TEMP A DIAG 6
RATE OVERRANGE DIAG 6
°F/°C DIAG 6
A/V WAVE (PULSE) DIAG 3
TEMP A (DVM) DIAG 6
DIAST (DVM) DIAG 5
RATE (DVM) DIAG 6
DVM COM DIAG 5
LOW BATT/MONITOR ON DIAG 5
TEMP B OVERRANGE DIAG 6
SKIP TEMP B DIAG 6
TEMP B (DVM) DIAG 6
+7V DIAG 3
A WAVE SCALED
RESP WAVE (0.5V/CM) DIAG 2
A WAVE
SKIP A/V DIAG 3
A/V OVERRANGE DIAG 3
TEMP A OVERRANGE DIAG 6
-ECG WAVE DIAG 1
WAVE COMMON DIAG 3
SYST (DVM) DIAG 5
MEAN (DVM) DIAG 5
PRESS/PULSE TRIG DIAG 7
PRESS/PULSE DIAG 7
ALARM DIAG 7
RESP OVERRANGE DIAG 6
SKIP RESP DIAG 2
RESP (DVM) DIAG 6
RESP TRIG DIAG 2

REPLACEABLE MECHANICAL PARTS

PARTS ORDERING INFORMATION

Replacement parts are available from or through your local Tektronix, Inc. Field Office or representative.

Changes to Tektronix instruments are sometimes made to accommodate improved components as they become available, and to give you the benefit of the latest circuit improvements developed in our engineering department. It is therefore important, when ordering parts, to include the following information in your order: Part number, instrument type or number, serial number, and modification number if applicable.

If a part you have ordered has been replaced with a new or improved part, your local Tektronix, Inc. Field Office or representative will contact you concerning any change in part number.

Change information, if any, is located at the rear of this manual.

SPECIAL NOTES AND SYMBOLS

X000	Part first added at this serial number
00X	Part removed after this serial number

FIGURE AND INDEX NUMBERS

Items in this section are referenced by figure and index numbers to the illustrations.

INDENTATION SYSTEM

This mechanical parts list is indented to indicate item relationships. Following is an example of the indentation system used in the description column.

1 2 3 4 5 Name & Description

Assembly and/or Component
Attaching parts for Assembly and/or Component
- - - * - - -
Detail Part of Assembly and/or Component
Attaching parts for Detail Part
- - - * - - -
Parts of Detail Part
Attaching parts for Parts of Detail Part
- - - * - - -

Attaching Parts always appear in the same indentation as the item it mounts, while the detail parts are indented to the right. Indented items are part of, and included with, the next higher indentation. The separation symbol - - - * - - - indicates the end of attaching parts.

Attaching parts must be purchased separately, unless otherwise specified.

ITEM NAME

In the Parts List, an Item Name is separated from the description by a colon (:). Because of space limitations, an Item Name may sometimes appear as incomplete. For further Item Name identification, the U.S. Federal Cataloging Handbook H6-1 can be utilized where possible.

ABBREVIATIONS

"	INCH
#	NUMBER SIZE
ACTR	ACTUATOR
ADPTR	ADAPTER
ALIGN	ALIGNMENT
AL	ALUMINUM
ASSEM	ASSEMBLED
ASSY	ASSEMBLY
ATTEN	ATTENUATOR
AWG	AMERICAN WIRE GAGE
BD	BOARD
BRKT	BRACKET
BRS	BRASS
BRZ	BRONZE
BSHG	BUSHING
CAB	CABINET
CAP	CAPACITOR
CER	CERAMIC
CHAS	CHASSIS
CKT	CIRCUIT
COMP	COMPOSITION
CONN	CONNECTOR
COV	COVER
CPLG	COUPLING
CRT	CATHODE RAY TUBE
DEG	DEGREE
DWR	DRAWER
ELCTRN	ELECTRON
ELEC	ELECTRICAL
ELCTLT	ELECTROLYTIC
ELEM	ELEMENT
EPL	ELECTRICAL PARTS LIST
EQPT	EQUIPMENT
EXT	EXTERNAL
FIL	FILLISTER HEAD
FLEX	FLEXIBLE
FLH	FLAT HEAD
FLTR	FILTER
FR	FRAME or FRONT
FSTNR	FASTENER
FT	FOOT
FXD	FIXED
GSKT	GASKET
HDL	HANDLE
HEX	HEXAGON
HEX HD	HEXAGONAL HEAD
HEX SOC	HEXAGONAL SOCKET
HLCPS	HELICAL COMPRESSION
HLEXT	HELICAL EXTENSION
HV	HIGH VOLTAGE
IC	INTEGRATED CIRCUIT
ID	INSIDE DIAMETER
IDENT	IDENTIFICATION
IMPLR	IMPELLER
IN	INCH
INCAND	INCANDESCENT
INSUL	INSULATOR
INTL	INTERNAL
LPHLDR	LAMPHOLDER
MACH	MACHINE
MECH	MECHANICAL
MTG	MOUNTING
NIP	NIPPLE
NON WIRE	NOT WIRE WOUND
OBD	ORDER BY DESCRIPTION
OD	OUTSIDE DIAMETER
OVH	OVAL HEAD
PH BRZ	PHOSPHOR BRONZE
PL	PLAIN or PLATE
PLSTC	PLASTIC
PN	PART NUMBER
PNH	PAN HEAD
PWR	POWER
RCPT	RECEPTACLE
RES	RESISTOR
RGD	RIGID
RLF	RELIEF
RTNR	RETAINER
SCH	SOCKET HEAD
SCOPE	OSCILLOSCOPE
SCR	SCREW
SE	SINGLE END
SECT	SECTION
SEMICOND	SEMICONDUCTOR
SHLD	SHIELD
SHLDR	SHOULDERED
SKT	SOCKET
SL	SLIDE
SLFLKG	SELF-LOCKING
SLVG	SLEEVING
SPR	SPRING
SQ	SQUARE
SST	STAINLESS STEEL
STL	STEEL
SW	SWITCH
T	TUBE
TERM	TERMINAL
THD	THREAD
THK	THICK
TNSN	TENSION
TPG	TAPPING
TRH	TRUSS HEAD
V	VOLTAGE
VAR	VARIABLE
W/	WITH
WSHR	WASHER
XFMR	TRANSFORMER
XSTR	TRANSISTOR

CROSS INDEX—MFR. CODE NUMBER TO MANUFACTURER

Mfr. Code	Manufacturer	Address	City, State, Zip
00779	AMP, INC.	P O BOX 3608	HARRISBURG, PA 17105
01295	TEXAS INSTRUMENTS, INC., SEMICONDUCTOR GROUP	P O BOX 5012, 13500 N CENTRAL EXPRESSWAY	DALLAS, TX 75222
08261	SPECTRA-STRIP CORP.	7100 LAMPSON AVE.	GARDEN GROVE, CA 92642
12360	ALBANY PRODUCTS CO., DIV. OF PNEUMO DYNAMICS CORPORATION	145 WOODWARD AVENUE	SOUTH NORWALK, CT 06586
22526	BERG ELECTRONICS, INC.	YOUK EXPRESSWAY	NEW CUMBERLAND, PA 17070
22670	G.M. NAMEPLATE, INC.	2040 15TH AVENUE WEST	SEATTLE, WA 98119
70318	ALLMETAL SCREW PRODUCTS CO., INC.	821 STEWART AVE.	GARDEN CITY, NY 11530
70485	ATLANTIC INDIA RUBBER WORKS, INC.	571 W. POLK ST.	CHICAGO, IL 60607
71590	CENTRALAB ELECTRONICS, DIV. OF GLOBE-UNION, INC.	P O BOX 858	FORT DODGE, IA 50501
71785	TRW, CINCH CONNECTORS	1501 MORSE AVENUE	ELK GROVE VILLAGE, IL 60007
73743	FISCHER SPECIAL MFG. CO.	446 MORGAN ST.	CINCINNATI, OH 45206
73803	TEXAS INSTRUMENTS, INC., METALLURGICAL MATERIALS DIV.	34 FOREST STREET	ATTLEBORO, MA 02703
74445	HOLO-KROME CO.	31 BROOK ST. WEST	HARTFORD, CT 06110
74545	HUBBELL HARVEY, INC.	584 DERBY MILFORD ROAD	ORANGE, CT 06477
77250	PHEOLL MANUFACTURING CO., DIVISION OF ALLIED PRODUCTS CORP.	5700 W. ROOSEVELT RD.	CHICAGO, IL 60650
77969	RUBBERCRAFT CORP. OF CALIF., LTD.	1800 W. 220TH ST.	TORRANCE, CA 90507
78189	ILLINOIS TOOL WORKS, INC. SHAKEPROOF DIVISION	ST. CHARLES ROAD	ELGIN, IL 60120
79807	WROUGHT WASHER MFG. CO.	2100 S. O BAY ST.	MILWAUKEE, WI 53207
80009	TEKTRONIX, INC.	P O BOX 500	BEAVERTON, OR 97077
83385	CENTRAL SCREW CO.	2530 CRESCENT DR.	BROADVIEW, IL 60153
88245	LITTON SYSTEMS, INC., USECO DIV.	13536 SATICOY ST.	VAN NUYS, CA 91409
95987	WECKESSER CO., INC.	4444 WEST IRVING PARK RD.	CHICAGO, IL 60641

Fig. & Index No.	Tektronix Part No.	Serial/Model No. Eff	Dscont	Qty	1 2 3 4 5 Name & Description	Mfr Code	Mfr Part Number
1-1	348-0414-00			2	BUMPER,PLASTIC:0.500 DIA,TEK BLUE	80009	348-0414-00
-2	355-0184-00			4	STUD,SNAP FSTNR:		
					(ATTACHING PARTS FOR EACH)		
-3	211-0105-00			1	SCREW,MACHINE:4-40 X 0.188"100 DEG,FLH STL	83385	OBD
					- - - * - - -		
-4	390-0581-00			1	CAB.,WRAPAROUND:TOP	80009	390-0581-00
-5	342-0212-00			1	. INSULATOR FILM:	80009	342-0212-00
					(ATTACHING PARTS)		
-6	211-0565-00			4	SCREW,MACHINE:6-32 X 0.250 INCH,TRH STL	83385	OBD
					- - - * - - -		
-7	348-0414-00			2	BUMPER,PLASTIC:0.500 DIA,TEK BLUE	80009	348-0414-00
-8	348-0089-00			4	BUMPER,PLASTIC:BLACK VINYL	80009	348-0089-00
-9	348-0380-01			4	FOOT,CABINET:	80009	348-0380-01
					(ATTACHING PARTS FOR EACH)		
-10	211-0097-00			2	SCREW,MACHINE:4-40 X 0.312 INCH,PNH STL	83385	OBD
					- - - * - - -		
-11	348-0282-00			1	STAND,ELEC EQPT:	80009	348-0282-00
-12	390-0363-00			1	COVER,MONITOR:BOTTOM 0.040 AL	80009	390-0363-00
					(ATTACHING PARTS)		
-13	211-0565-00			4	SCREW,MACHINE:6-32 X 0.250 INCH,TRH STL	83385	OBD
					- - - * - - -		
-14	200-2136-00			1	DOOR,ACCESS:FRONT,NEONATAL,W/HARDWARE	80009	200-2136-00
					(ATTACHING PARTS)		
-15	211-0034-00			4	SCREW,MACHINE:2-56 X 0.50 INCH,PNH	83385	OBD
					- - - * - - -		
-16	337-2405-00			1	SHLD,IMPLOSION:	22670	OBD
-17	334-3037-00			1	MARKER,IDENT:	22670	OBD
-18	378-0100-00			1	FILTER,LIGHT:AMB,2.4 X 0.85 X 0.03	80009	378-0100-00
-19	331-0433-00			1	MASK,READOUT:	80009	331-0433-00
-20	----- -----			1	LIGHT IND:(SEE DS1585 EPL)		
-21	333-2305-00			1	PANEL,FRONT:HOUSING	80009	333-2305-00
					(ATTACHING PARTS)		
-22	211-0025-00			2	SCREW,MACHINE:4-40 X 0.375 100 DEG,FLH STL	83385	OBD
					- - - * - - -		
-23	366-1495-00			6	KNOB:GRAY	80009	366-1495-00
	----- -----			-	. EACH KNOB INCLUDES:		
	213-0153-00			1	. SETSCREW:5-40 X 0.125 INCH,HEX SOC STL	74445	OBD
-24	426-1072-00			19	FRAME,PUSH BTN:PLASTIC	80009	426-1072-00
-25	----- -----			1	RES.,VAR,NONWIR:(SEE 1733 EPL)		
					(ATTACHING PARTS)		
-26	210-0583-00			1	NUT,PLAIN,HEX.:0.25-32 X 0.312 INCH,BRS	73743	2X20224-402
-27	210-0940-00			1	WASHER,FLAT:0.25 ID X 0.375 INCH OD,STL	79807	OBD
					- - - * - - -		
-28	----- -----			1	RES.,VAR NONWIR:(SEE R635 EPL)		
					(ATTACHING PARTS)		
-29	210-0583-00			1	NUT,PLAIN,HEX.:0.25-32 X 0.312 INCH,BRS	73743	2X20224-402
-30	210-0940-00			1	WASHER,FLAT:0.25 ID X 0.375 INCH OD,STL	79807	OBD
					- - - * - - -		
-31	----- -----			1	RES.,VAR NONWIR:(SEE R470 EPL)		
					(ATTACHING PARTS)		
-32	210-0583-00			1	NUT,PLAIN,HEX.:0.25-32 X 0.312 INCH,BRS	73743	2X20224-402
-33	210-0940-00			1	WASHER,FLAT:0.25 ID X 0.375 INCH OD,STL	79807	OBD
					- - - * - - -		
-34	----- -----			1	RES.,VAR NONWIR:(SEE R212 EPL)		
					(ATTACHING PARTS)		
-35	210-0583-00			1	NUT,PLAIN,HEX.:0.25-32 X 0.312 INCH,BRS	73743	2X20224-402
-36	210-0940-00			1	WASHER,FLAT:0.25 ID X 0.375 INCH OD,STL	79807	OBD
					- - - * - - -		
-37	366-0261-01			1	KNOB:0.312 OD X 0.406 LG,PLSTC	80009	366-0261-01
	214-0949-00			1	. SPR,HLCL,TRSN:0.282" OD X 0.125" LONG	80009	214-0949-00

Fig. & Index No.	Tektronix Part No.	Serial/Model No. Eff	Dscont	Qty	1 2 3 4 5 Name & Description	Mfr Code	Mfr Part Number
1-38	----- -----			1	RES.,VAR NONWIR:(SEE R765 EPL)		
					(ATTACHING PARTS)		
-39	210-0583-00			1	NUT,PLAIN,HEX.:0.25-32 X 0.312 INCH,BRS	73743	2X20224-402
-40	210-0940-00			1	WASHER,FLAT:0.25 ID X 0.375 INCH OD,STL	79807	OBD
-41	210-0046-00			1	WASHER,LOCK:INTL,0.26 ID X 0.40" OD,STL	78189	1214-05-00-0541C
					- - - * - - -		
-42	----- -----			1	RES.,VAR NONWIR:(SEE R1515 EPL)		
					(ATTACHING PARTS)		
-43	210-0583-00			1	NUT,PLAIN,HEX.:0.25-32 X 0.312 INCH,BRS	73743	2X20224-402
-44	210-0940-00			1	WASHER,FLAT:0.25 ID X 0.375 INCH OD,STL	79807	OBD
					- - - * - - -		
-45	----- -----			1	RES.,VAR NONWIR:(SEE R1505 EPL)		
					(ATTACHING PARTS)		
-46	210-0583-00			1	NUT,PLAIN,HEX.:0.25-32 X 0.312 INCH,BRS	73743	2X20224-402
-47	210-0940-00			1	WASHER,FLAT:0.25 ID X 0.375 INCH OD,STL	79807	OBD
					- - - * - - -		
-48	333-2303-00			1	PANEL,FRONT:413	80009	333-2303-00
-49	200-0935-00			2	BASE,LAMPHOLDER:0.29 ID X 0.19 CASE	80009	200-0935-00
-50	352-0157-00			2	LAMPHOLDER:WHITE PLASTIC	80009	352-0157-00
-51	----- -----			1	LAMP LED:YELLOW(SEE DS470 EPL)		
-52	----- -----			1	LAMP LED:GREEN(SEE DS1725 EPL)		
-53	----- -----			1	CKT BOARD ASSY:SWEEP SW(SEE A9 EPL)		
					(ATTACHING PARTS)		
-54	211-0541-00			2	SCREW,MACHINE:6-32 X 0.25"100 DEG,FLH STL	83385	OBD
					- - - * - - -		
	----- -----			-	. CKT BOARD ASSY INCLUDES:		
-55	366-1559-00			8	. PUSH BUTTON:GRAY	80009	366-1559-00
-56	220-0802-00			2	. NUT BLOCK:0.325 X 0.4 X0.19,(2)0-80 THRU	80009	220-0802-00
					(ATTACHING PARTS FOR EACH)		
-57	211-0186-00			1	. SCREW,MACHINE:0-80 X 0.125,FILH,SST,SLOT	12360	OBD
					- - - * - - -		
-58	----- -----			2	. SWITCH,PUSH:(SEE S1510 & S1956 EPL)		
-59	----- -----			1	. SWITCH,PUSH:(SEE S1782 EPL)		
-60	----- -----			1	. SWITCH,PUSH:(SEE S1554 EPL)		
-61	361-0542-00			14	. SPACER,SWITCH:PLASTIC	71590	J-64281
-62	131-0589-00			22	. CONTACT,ELEC:0.46 INCH LONG	22526	47350
-63	----- -----			1	CKT BOARD ASSY:READOUT SW(SEE A10 EPL)		
					(ATTACHING PARTS)		
-64	211-0241-00			2	SCREW,CAP:4-40 X 0.375,HEX SKT		OBD
					- - - * - - -		
	----- -----			-	. CKT BOARD ASSY INCLUDES:		
-65	220-0802-00			2	. NUT BLOCK:0.325 X 0.4 X0.19,(2)0-80 THRU	80009	220-0802-00
					(ATTACHING PARTS FOR EACH)		
-66	211-0186-00			2	. SCREW,MACHINE:0-80 X 0.125,FILH,SST,SLOT	12360	OBD
					- - - * - - -		
-67	366-1559-00			6	. PUSH BUTTON:GRAY	80009	366-1559-00
-68	366-1489-23			1	. PUSH BUTTON:GRAY--RESET	80009	366-1489-23
-69	384-1136-00			1	. EXTENSION SHAFT:0.95 INCH LONG	80009	384-1136-00
-70	----- -----			1	. SWITCH,PUSH:(SEE S1135 EPL)		
-71	----- -----			-	. SWITCH,PUSH:(SEE S1559 EPL)		
-72	361-0542-00			6	. SPACER,SWITCH:PLASTIC	71590	J-64281
-73	131-0608-00			12	. CONTACT,ELEC:0.365 INCH LONG	22526	47357
-74	----- -----			1	. LT EMITTING DIO:RED/GREEN(SEE DS2039 EPL)		
-75	----- -----			1	. LT EMITTING DIO:RED(SEE DS1727 EPL)		
	175-2096-00			1	. CA ASSY,SP,ELEC:6,26 AWG,U.5L	80009	175-2096-00
-76	131-0707-00			6	. . CONTACT,ELEC:0.48"L,22-26 AWG WIRE	22526	75691-005
-77	175-0829-00			FT	. . WIRE,ELECTRICAL:6 WIRE RIBBON,0.397 FT L	08261	OBD
-78	352-0164-00			1	. . CONN BODY,PL,EL:6 WIRE BLACK	80009	352-0164-00
	175-2108-00			1	. CA ASSY,SP,ELEC:5.26 AWG,3.5 L	80009	175-2108-00
-79	131-0707-00			5	. . CONTACT,ELEC:0.48"L,22-26 AWG WIRE	22526	75691-005
-80	175-0828-00			FT	. . WIRE,ELECTRICAL:5 WIRE RIBBON,0.313 FT L	08261	OBD
-81	352-0163-01			1	. . CONN BODY,PL,EL:5 WIRE BROWN	80009	352-0163-01

Fig. & Index No.	Tektronix Part No.	Serial/Model No. Eff	Dscont	Qty	1 2 3 4 5 Name & Description	Mfr Code	Mfr Part Number
1-82	----- -----			1	CKT BOARD ASSY:DISPLAY(SEE A8 EPL)		
					(ATTACHING PARTS)		
-83	211-0097-00			2	SCREW,MACHINE:4-40 X 0.312 INCH,PNH STL	83385	OBD
					- - - * - - -		
	----- -----			-	CKT BOARD ASSY INCLUDES:		
-84	136-0676-00			38	. SOCKET,PIN TERM:FOR 0.016-0.029 DIA PIN	00779	51965-1
-85	136-0673-00			1	. SKT,PL-IN ELEK:READOUT LAMPS,38 CONTACTS	80009	136-0673-00
-86	131-0608-00			19	. CONTACT,ELEC:0.365 INCH LONG	22526	47357
-87	386-3714-00			1	SUBPANEL,FRONT:413	80009	386-3714-00
					(ATTACHING PARTS)		
-88	210-0586-00			4	NUT,PLAIN,EXT W:4-40 X 0.25 INCH,STL	78189	OBD
					- - - * - - -		
-89	348-0352-00			4	PAD,CUSHIONING:	80009	348-0352-00
	136-0551-00			1	SOCKET,PLUG-IN:CRT	80009	136-0551-00
-90	136-0669-00			1	. SKT,PL-IN ELEK:CRT,5 CONTACTS	80009	136-0669-00
-91	352-0201-00			1	. CONN BODY,PL,EL:5 WIRE BLACK	80009	352-0201-00
-92	131-0621-00			5	. CONTACT,ELEC:0.577"L,22-26 AWG WIRE	22526	46233
-93	175-0828-00			FT	. WIRE,ELECTRICAL:5 WIRE RIBBON,0.375 FT L	08261	OBD
-94	343-0429-01			2	CUSHION,CRT:REAR,1.0 LONG	80009	343-0429-01
-95	343-0428-00			1	CLAMP,LOOP:	80009	343-0428-00
					(ATTACHING PARTS)		
-96	211-0097-00			1	SCREW,MACHINE:4-40 X 0.312 INCH,PNH STL	83385	OBD
					- - - * - - -		
-97	166-0026-00			1	SPACER,SLEEVE:0.375 L X 0.125 ID	71590	P7610-1
					(ATTACHING PARTS)		
-98	211-0126-00			1	SCREW,MACHINE:4-40 X 0.625,FLH,SST	70318	OBD
					- - - * - - -		
-99	343-0427-00			1	RTNR,ELCTRN TUB:FRONT	80009	343-0427-00
					(ATTACHING PARTS)		
-100	211-0021-00			3	SCREW,MACHINE:4-40 X 1.25 INCH,PNH STL	83385	OBD
					- - - * - - -		
-101	343-0144-00			1	CLAMP,LOOP:0.125 INCH ID,BLK NYLON	95987	1-8-2
-102	129-0456-00			1	SPACER,POST:0.75 L,W/4-40 STUD 1 END	80009	129-0456-00
-103	252-0571-00			FT	RUB.SPL SHAPED:CHANNEL,2.0 FT LONG	77969	1353
-104	----- -----			1	ELECTRON TUBE:(SEE 2120 EPL)		
-105	119-0443-01[1]			1	BATTERY SET:FOUR CELLS	80009	119-0443-01
					(ATTACHING PARTS)		
-106	211-0101-00			2	SCREW,MACHINE:4-40 X 0.25" 100 DEG,FLH STL	83385	OBD
					- - - * - - -		
-107	352-0449-00			1	HOLDER,SPEAKER:	80009	352-0449-00
					(ATTACHING PARTS)		
-108	211-0101-00			1	SCREW,MACHINE:4-40 X 0.25" 100 DEG,FLH STL	83385	OBD
					- - - * - - -		
-109	----- -----			1	LOUDSPEAKER,PM:W/CABLE(SEE LS1759 EPL)		
-110	426-1405-01			1	FRAME SECT,CAB. LEFT	80009	426-1405-01
					(ATTACHING PARTS)		
-111	211-0101-00			4	SCREW,MACHINE:4-40 X 0.25" 100 DEG,FLH STL	83385	OBD
					- - - * - - -		
-112	334-3152-00			1	MARKER,IDENT:MARKED DANGER/AC LINE	22670	OBD
-113	131-1371-00			3	TERM,FEEDTHRU:0.478 L X 0.20A DIA,BRASS	80009	131-1371-00
					(ATTACHING PARTS FOR EACH)		
-114	358-0176-00			1	INSULATOR,BSHG:	88245	421472
					- - - * - - -		
-115	344-0098-00			2	CLIP,DECORATIVE:	80009	344-0098-00
					(ATTACHING PARTS FOR EACH)		
-116	213-0089-00			1	SCREW,MACHINE:10-32 X 0.375,HEX HD	80009	213-0089-00
-117	210-0010-00			1	WASHER,LOCK:INT,0.20 ID X0.376" OD,STL	78189	1210-00-00-0541C
					- - - * - - -		
-118	367-0037-00			1	HANDLE,CARRYING:	80009	367-0037-00
-119	426-1404-01			1	FRAME,SEC,CAB.:RIGHT	80009	426-1404-01
					(ATTACHING PARTS)		
-120	211-0101-00			4	SCREW,MACHINE:4-40 X 0.25" 100 DEG,FLH STL	83385	OBD
					- - - * - - -		
-121	252-0603-00			FT	PLASTIC STRIP:3.833 FT L		
-122	426-0997-03			2	FRAME,SEC.,CAB:FRONT & REAR	80009	426-0997-03

[1]Furnished as a unit only.

Fig. & Index No.	Tektronix Part No.	Serial/Model No. Eff	Dscont	Qty	1 2 3 4 5 Name & Description	Mfr Code	Mfr Part Number
2-1	348-0559-00			1	PAD CUSHION:1. X 3. X 0.312 INCH LONG		
-2	343-0432-00			1	RETAINER,CKT BD:	80009	343-0432-00
-3	----- -----			1	CKT BOARD ASSY:DVM(SEE A4 EPL)		
-4	337-2410-00			1	SHIELD,ELEC:CIRCUIT CARD	80009	337-2410-00
					(ATTACHING PARTS)		
-5	211-0116-00			3	SCR,ASSEM WSHR:4-40 X 0.312 INCH,PNH BRS	83385	OBD
					- - - * - - -		
	----- -----			-	. CKT BOARD ASSY INCLUDES:		
-6	214-2440-00			2	. RECEPTACLE,PIN:CIRCUIT CARD	80009	214-2440-00
-7	136-0461-00			4	. SOCKET,PLUG-IN:CKT BOARD,5 CONTACT	22526	65059-001
-8	131-2039-00			2	. CONN,RCPT,ELEC:CKT CD,10 FEMALE,DOUBLE ROW	22526	65002-075
-9	136-0252-04			66	. SOCKET,PIN TERM:0.188 INCH LONG	22526	75060
-10	136-0514-00			5	. SOCKET,PLUG IN:MICROCIRCUIT,8 CONTACT	73803	C9308-02
-11	136-0269-02			7	. SOCKET,PLUG-IN:14 CONTACT,LOW CLEARANCE	01295	C931402
-12	136-0260-02			8	. SOCKET,PLUG-IN:16 CONTACT,LOW CLEARANCE	01295	C931602
-13	214-0579-00			13	. TERM.,TEST PT:0.40 INCH LONG	80009	214-0579-00
-14	131-0589-00			2	. CONTACT,ELEC:0.46 INCH LONG	22526	47350
-15	----- -----			1	CKT BOARD ASSY:PRESSURE/PULSE(SEE A3 EPL)		
-16	136-0461-00			6	. SOCKET,PLUG-IN:CKT BOARD,5 CONTACT	22526	65059-001
-17	366-1559-00			6	. PUSH BUTTON:GRAY	80009	366-1559-00
-18	384-1136-00			6	. EXTENSION SHAFT:0.95 INCH LONG	80009	384-1136-00
-19	----- -----			1	. SWITCH,PUSH:(SEE S605 EPL)		
-20	361-0542-00			5	. SPACER,SWITCH:PLASTIC	71590	J-64281
-21	386-1895-00			1	. SUPPORT,CKT BD:FOR 0.250 BD HEIGHT,PLSTC	80009	386-1895-00
-22	----- -----			1	. LINK,TERM.CONNE:(SEE R661 EPL)		
-23	136-0514-00			5	. SOCKET,PLUG IN:MICROCIRCUIT,8 CONTACT	73803	C9308-02
-24	136-0269-02			10	. SOCKET,PLUG-IN:14 CONTACT,LOW CLEARANCE	01295	C931402
-25	131-0993-00			3	. LINK,TERM.CONNE:2 WIRE BLACK	00779	530153-2
-26	131-0589-00			20	. CONTACT,ELEC:0.46 INCH LONG	22526	47350
-27	214-0579-00			6	. TERM.,TEST PT:0.40 INCH LONG	80009	214-0579-00
-28	136-0252-04			12	. SOCKET,PIN TERM:0.188 INCH LONG	22526	75060
-29	214-2440-00			2	. RECEPTACLE,PIN:CIRCUIT CARD	80009	214-2440-00
-30	----- -----			-	CKT BOARD ASSY:RESPIRATION(SEE A2 EPL)		
-31	366-1559-00			1	. PUSH BUTTON:GRAY	80009	366-1559-00
-32	384-1099-00			1	. EXTENSION SHAFT:PUSH BUTTON,1.54 INCH LONG	80009	384-1099-00
-33	----- -----			1	. SWITCH,PUSH:(SEE S405 EPL)		
-34	361-0542-00			2	. SPACER,SWITCH:PLASTIC	71590	J-64281
-35	136-0461-00			4	. SOCKET,PLUG-IN:CKT BOARD,5 CONTACT	22526	65059-001
-36	136-0514-00			7	. SOCKET,PLUG IN:MICROCIRCUIT,8 CONTACT	73803	C9308-02
-37	136-0269-02			4	. SOCKET,PLUG-IN:14 CONTACT,LOW CLEARANCE	01295	C931402
-38	136-0260-02			1	. SOCKET,PLUG-IN:16 CONTACT,LOW CLEARANCE	01295	C931602
-39	131-0589-00			3	. CONTACT,ELEC:0.46 INCH LONG	22526	47350
-40	214-0579-00			11	. TERM.,TEST PT:0.40 INCH LONG	80009	214-0579-00
-41	136-0252-04			42	. SOCKET,PIN TERM:0.188 INCH LONG	22526	75060
-42	214-2440-00			2	. RECEPTACLE,PIN:CIRCUIT CARD	80009	214-2440-00
-43	----- -----			1	CKT BOARD ASSY:ECG(SEE A1 EPL)		
					(ATTACHING PARTS)		
-44	211-0101-00			1	SCREW,MACHINE:4-40 X 0.25" 100 DEG,FLH STL	83385	OBD
					- - - * - - -		
-45	348-0003-00			1	GROMMET,RUBBER:0.312 INCH DIAMETER	70485	1411B6040
-46	337-1816-02			1	SHIELD,ELEC:ECG,FRONT	80009	337-1816-02
					(ATTACHING PARTS)		
-47	211-0008-00			1	SCREW,MACHINE:4-40 X 0.25 INCH,PNH STL	83385	OBD
					- - - * - - -		
	----- -----			-	. CKT BOARD ASSY INCLUDES:		
-48	337-1817-00			1	. SHIELD,ELEC:ECG REAR	80009	337-1817-00
					(ATTACHING PARTS)		
-49	129-0338-00			1	. POST,ELEC-MECH:HEX.,0.188 X 0.64 INCH LONG	80009	129-0338-00
					- - - * - - -		
-50	214-2440-00			2	. RECEPTACLE,PIN:CIRCUIT CARD	80009	214-2440-00
-51	136-0461-00			4	. SOCKET,PLUG-IN:CKT BOARD,5 CONTACT	22526	65059-001
-52	366-1559-00			4	. PUSH BUTTON:GRAY	80009	366-1559-00
-53	384-1099-00			4	. EXTENSION SHAFT:PUSH BUTTON,1.54 INCH LONG	80009	384-1099-00

Fig. & Index No.	Tektronix Part No.	Serial/Model No. Eff	Dscont	Qty	1 2 3 4 5 Name & Description	Mfr Code	Mfr Part Number
2-54	----- -----			1	. SWITCH,PUSH:(SEE S101 EPL)		
-55	361-0542-00			4	. SPACER,SWITCH:PLASTIC	71590	J-64281
-56	131-0589-00			12	. CONTACT,ELEC:0.46 INCH LONG	22526	47350
-57	131-0608-00			3	. CONTACT,ELEC:0.365 INCH LONG	22526	47357
-58	220-0449-00			1	. NUT,SLEEVE:4-40 X 0.188 X 0.50" LONG	80009	220-0449-00
					(ATTACHING PARTS)		
-59	129-0613-00			1	. SPACER,POST:0.8 L,W/4-40 THD ONE END AL	80009	129-0613-00
					- - - * - - -		
-60	136-0269-02			2	. SOCKET,PLUG-IN:14 CONTACT,LOW CLEARANCE	01295	C931402
-61	136-0514-00			6	. SOCKET,PLUG IN:MICROCIRCUIT,8 CONTACT	73803	C9308-02
-62	214-0579-00			9	. TERM.,TEST PT:0.40 INCH LONG	80009	214-0579-00
-63	136-0252-04			66	. SOCKET,PIN TERM:0.188 INCH LONG	22526	75060
-64	131-0993-00			2	. LINK,TERM.CONNE:2 WIRE BLACK	00779	530153-2
-65	----- -----			-	CKT BOARD ASSY:CONDITION(SEE A5 EPL)		
					(ATTACHING PARTS)		
-66	211-0116-00			3	SCR,ASSEM WSHR:4-40 X 0.312 INCH,PNH BRS	83385	OBD
					- - - * - - -		
-67	342-0400-00			1	INSUL,CKT CARD:CONDITIONER	80009	342-0400-00
	----- -----			-	. CKT BOARD ASSY INCLUDES:		
-68	131-0993-00			2	. LINK,TERM.CONNE:2 WIRE BLACK	00779	530153-2
-69	136-0514-00			1	. SOCKET,PLUG IN:MICROCIRCUIT,8 CONTACT	73803	C9308-02
-70	136-0269-02			26	. SOCKET,PLUG-IN:14 CONTACT,LOW CLEARANCE	71785	133-59-02-073
-71	136-0260-02			7	. SOCKET,PLUG-IN:16 CONTACT,LOW CLEARANCE	01295	C931602
-72	131-0589-00			72	. CONTACT,ELEC:0.46 INCH LONG	22526	47350
-73	214-0579-00			6	. TERM.,TEST PT:0.40 INCH LONG	80009	214-0579-00
-74	136-0252-04			18	. SOCKET,PIN TERM:0.188 INCH LONG	22526	75060
-75	131-0608-00			20	. CONTACT,ELEC:0.365 INCH LONG	22526	47357
-76	131-2072-00			1	. TERM. SET,PIN:17 MALE CONT,RIGHT ANGLE	22526	65522-117
-77	131-2073-00			1	. TERM. SET,PIN:17 MALE CONT,RIGHT ANGLE	22526	65525-117
-78	----- -----			1	CKT BOARD ASSY:HIGH VOLTAGE(SEE A7 EPL)		
					(ATTACHING PARTS)		
	211-0116-00			2	SCR,ASSEM WSHR:4-40 X 0.312 INCH,PNH BRS	83385	OBD
					- - - * - - -		
-79	342-0401-00			1	INSUL,CKT CARD:HIGH VOLTAGE	80009	342-0401-00
	----- -----			-	. CKT BOARD INCLUDES:		
-80	129-0576-00			2	. SPACER,POST:0.393 L,W/4-40 THD,BRS,0.21	80009	129-0576-00
-81	195-0125-00			1	. LEAD,ELECTRICAL:HIGH VOLTAGE	80009	195-0125-00
-82	131-0589-00			3	. CONTACT,ELEC:0.46 INCH LONG	22526	47350
-83	136-0263-04			17	. SOCKET,PIN TERM:FOR 0.025 INCH SQUARE PIN	22526	75377-001
-84	----- -----			2	TRANSISTOR:(SEE Q1922 & Q1973 EPL)		
					(ATTACHING PARTS FOR EACH)		
-85	211-0097-00			1	SCREW,MACHINE:4-40 X 0.312 INCH,PNH STL	83385	OBD
-86	210-0586-00			1	NUT,PLAIN,EXT W:4-40 X 0.25 INCH,STL	78189	OBD
					- - - * - - -		
-87	----- -----			1	TRANSISTOR:(SEE Q1945 EPL)		
					(ATTACHING PARTS)		
-88	211-0198-00			1	SCREW,MACHINE:4-40 X 0.438 PNH,STL,POZ	77250	OBD
-89	210-0586-00			1	NUT,PLAIN,EXT W:4-40 X 0.25 INCH,STL	78189	OBD
-90	210-0071-00			1	WASHER,SPR TNSN:0.146 ID X 0.323" OD,STL	78189	4706-05-01-0531
					- - - * - - -		
-91	342-0163-00			1	INSULATOR,PLATE:XSTR,0.675 X 0.625 X 0.001"	80009	342-0163-00
-92	214-2539-00			1	HEAT SINK,XSTR:(2) TO-3 & (I) TO-27	80009	214-2539-00
					(ATTACHING PARTS)		
-93	211-0101-00			2	SCREW,MACHINE:4-40 X 0.25" 100 DEG,FLH STL	83385	OBD
					- - - * - - -		
-94	----- -----			1	CKT BOARD ASSY:MAIN(SEE A6 EPL)		
					(ATTACHING PARTS)		
-95	211-0101-00			8	SCREW,MACHINE:4-40 X 0.25" 100 DEG,FLH STL	83385	OBD
-96	211-0014-00			1	SCREW,MACHINE:4-40 X 0.50 INCH,PNH STL	83385	OBD
-97	210-0586-00			1	NUT,PLAIN,EXT W:4-40 X 0.25 INCH,STL	78189	OBD
					- - - * - - -		
	----- -----			-	. CKT BOARD ASSY INCLUDES:		

Fig. & Index No.	Tektronix Part No.	Serial/Model No. Eff	Dscont	Qty	1 2 3 4 5 Name & Description	Mfr Code	Mfr Part Number
2-98	220-0503-00			4	. NUT BLOCK:0.5 X 0.188 X 0.75,TWO 4-40 THRU	80009	220-0503-00
					(ATTACHING PARTS FOR EACH)		
-99	211-0116-00			2	. SCR,ASSEM WSHR:4-40 X 0.312 INCH,PNH BRS	83385	OBD
					- - - * - - -		
-100	131-0993-00			1	. LINK,TERM.CONNE:2 WIRE BLACK	00779	530153-2
-101	366-1559-00			1	. PUSH BUTTON:GRAY	80009	366-1559-00
-102	384-1136-00			1	. EXTENSION SHAFT:0.95 INCH LONG	80009	384-1136-00
-103	----- -----			1	. SWITCH,PUSH:(SEE S1532 EPL)		
-104	361-0542-00			2	. SPACER,SWITCH:PLASTIC	71590	J-64281
-105	131-2083-00			1	. BUS,CONDUCTOR:2,26 AWG,1.5 L	80009	131-2083-00
-106	131-0608-00			110	. CONTACT,ELEC:0.365 INCH LONG	22526	47357
-107	129-0561-00			3	. SPACER,POST:0.535 L,W-4-40 INTL ONE END	80009	129-0561-00
-108	131-2125-00			3	. CONN,RCPT,ELEC:CKT BD,2 X 10 FEMALE		
-109	136-0514-00			5	. SOCKET,PLUG IN:MICROCIRCUIT,8 CONTACT	73803	C9308-02
-110	136-0269-02			8	. SOCKET,PLUG-IN:14 CONTACT,LOW CLEARANCE	01295	C931402
-111	136-0260-02			6	. SOCKET,PLUG-IN:16 CONTACT,LOW CLEARANCE	01295	C931602
-112	214-0579-00			8	. TERM.,TEST PT:0.40 INCH LONG	80009	214-0579-00
-113	136-0252-04			117	. SOCKET,PIN TERM:0.188 INCH LONG	22526	75060
-114	131-0589-00			130	. CONTACT,ELEC:0.46 INCH LONG	22526	47350
-115	214-2441-00			8	. PIN,SHLDR,HDLS:CIRCUIT CARD	80009	214-2441-00
-116	131-0591-00			9	. CONTACT,ELEC:0.835 INCH LONG	22526	47352
-117	----- -----			1	. RES.,THERMAL:(SEE RT1922 EPL)		
-118	386-3781-00			1	SUPPORT,CKT CD:MAIN	80009	386-3781-00
					(ATTACHING PARTS)		
-119	211-0025-00			2	SCREW,MACHINE:4-40 X 0.375 100 DEG,FLH STL	83385	OBD
					- - - * - - -		
-120	337-1865-00			1	SHLD,ELEC CONN:ECG,TOP	80009	337-1865-00
					(ATTACHING PARTS)		
-121	211-0007-00			2	SCREW,MACHINE:4-40 X 0.188 INCH,PNH STL	83385	OBD
					- - - * - - -		
-122	----- -----			1	CONNECTOR,RCPT,:(SEE J130 EPL)		
					(ATTACHING PARTS)		
-123	211-0233-00			2	SCREW,TPG,TC:4-24 X 0.438,PNH,STL	83385	OBD
-124	210-0201-00			1	TERMINAL,LUG:SE #4	78189	2104-04-00-2520N
					- - - * - - -		
-125	348-0055-00			1	GROMMET,PLASTIC:0.25 INCH DIA	80009	348-0055-00
-126	337-1866-00			1	SHIELD,ELEC CONN:ECG	80009	337-1866-00
-127	342-0189-00			1	INSULATOR,CONN:	80009	342-0189-00
					(ATTACHING PARTS)		
-128	213-0267-00			2	SCREW,MACHINE:4-24 X 0.375 INCH,PNH STL	83385	OBD
					- - - * - - -		
-129	348-0530-00			2	FOOT,CORD WRAP:	80009	348-0530-00
					(ATTACHING PARTS FOR EACH)		
-130	211-0571-00			2	SCREW,MACHINE:6-32 X 2.50 INCHES,PNH,STL	83385	OBD
					- - - * - - -		
-131	131-1703-00			1	CONN,PLUG,ELEC:	74545	8215-C
-132	343-0439-00			1	RETAINER,CABLE:	80009	343-0439-00
-133	175-1415-01			1	CABLE,PWR,ELEC:	80009	175-1415-01
					(ATTACHING PARTS)		
-134	343-0440-00			1	RTNR,CABLE NIP.:	80009	343-0440-00
-135	211-0018-00			2	SCREW,MACHINE:4-40 X 0.875 INCH,PNH STL	83385	OBD
					- - - * - - -		
-136	200-1561-00			1	CABLE NIP,ELEC:	80009	200-1561-00
-137	----- -----			1	XFM,PWR STPDN:(SEE T1910 EPL)		
-138	348-0003-00			2	. GROMMET,RUBBER:0.312 INCH DIAMETER	70485	1411B6040
-139	200-0105-02			1	. COVER,ELEC XFMR:	80009	200-0105-02
-140	200-0105-01			1	. COVER,ELEC XFMR:	80009	200-0105-01
-141	211-0552-00			4	. SCREW,MACHINE:6-32 X 2 INCH,PNH STL	83385	OBD
-142	210-0006-00			4	. WASHER,LOCK:INTL,0.146 IDX 0.288 OD,STL	78189	1206-00-00-0541C
-143	210-0407-00			4	. NUT,PLAIN,HEX.:6-32 X 0.25 INCH,BRS	73743	3038-0228-402
-144	210-0006-00			3	. WASHER,LOCK:INTL,0.146 IDX 0.288 OD,STL	78189	1206-00-00-0541C
-145	210-0202-00			1	. TERMINAL,LUG:SE #6	78189	2104-06-00-2520N
-146	252-0571-00			FT	RUB.SPL SHAPED:CHANNEL,2.0 FT LONG	77969	1353

Fig. & Index No.	Tektronix Part No.	Serial/Model No. Eff	Dscont	Qty	1 2 3 4 5 Name & Description	Mfr Code	Mfr Part Number
2-147	334-3152-00			1	MARKER,IDENT:MARKED DANGERAC LINE	22670	OBD
-148	358-0281-00			1	GROMMET,PLASTIC:	80009	358-0281-00
-149	337-2449-00			1	SHIELD,ELEC:VOLTAGE SELECTOR	80009	337-2449-00
-150	----- -----			1	SWITCH,SLIDE:(SEE S1910 EPL)		
					(ATTACHING PARTS)		
-151	211-0007-00			2	SCREW,MACHINE:4-40 X 0.188 INCH,PNH STL	83385	OBD
					- - - * - - -		
-152	----- -----			2	SWITCH,BREAKER:(SEE CB1906 & CB1907 EPL)		
-153	131-0775-00			2	CONTACT,ELEC:HEX,0.25 INCH W/6-32 1 END	88245	1601-A
-154	210-0201-00			2	TERMINAL,LUG:SE #4	78189	2104-04-00-2520N
					(ATTACHING PARTS)		
-155	210-0551-00			2	NUT,PLAIN,HEX.:4-40 X 0.25 INCH,STL	83385	OBD
					- - - * - - -		
-156	----- -----			2	SEMICOND DEVICE:(SEE CR1910 & CR1911 EPL)		
					(ATTACHING PARTS FOR EACH)		
-157	210-0457-00			1	NUT,PLAIN,EXT W:6-32 X 0.312 INCH,STL	83385	OBD
					- - - * - - -		
-158	----- -----			3	JACK,TELEPHONE:(SEE J1596,J1597 & J1592 EPL)		
-159	386-3514-01			1	PLATE,CONN MTG:REAR PANEL	80009	386-3514-01
					(ATTACHING PARTS)		
-160	211-0097-00			4	SCREW,MACHINE:4-40 X 0.312 INCH,PNH STL	83385	OBD
-161	210-0004-00			4	WASHER,LOCK:INTL,0.12 ID X 0.26"OD,STL	78189	1204-00-00-0541C
	210-0012-00			3	WASHER,LOCK:INTL,0.375 ID X 0.50" OD STL	78189	1220-02-00-0541C
					- - - * - - -		
-162	366-1125-00			1	KNOB:	80009	366-1125-00
	213-0153-00			1	. SETSCREW:5-40 X 0.125 INCH,HEX SOC STL	74445	OBD
-163	----- -----			1	RES.,NONWIR:(SEE R1731 EPL)		
					(ATTACHING PARTS)		
-164	210-0583-00			1	NUT,PLAIN,HEX.:0.25-32 X 0.312 INCH,BRS	73743	2X20224-402
-165	210-0940-00			1	WASHER,FLAT:0.25 ID X 0.375 INCH OD,STL	79807	OBD
					- - - * - - -		
-166	366-0491-01			1	KNOB:	80009	366-0491-01
	213-0153-00			1	. SETSCREW:5-40 X 0.125 INCH,HEX SOC STL	74445	OBD
-167	----- -----			1	SWITCH,ROTARY:(SEE S1426 EPL)		
-168	343-0144-00			2	CLAMP,LOOP:0.125 INCH ID,BLK NYLON	95987	1-8-2
					(ATTACHING PARTS FOR EACH)		
-169	210-0406-00			1	NUT,PLAIN,HEX.:4-40 X 0.188 INCH,BRS	73743	2X12161-402
-170	210-0994-00			1	WASHER,FLAT:0.125 ID X 0.25" OD,STL	83385	OBD
					- - - * - - -		
-171	----- -----			1	CONN,RCPT,ELEC:(SEE J816 EPL)		
					(ATTACHING PARTS)		
-172	211-0016-00			2	SCREW,MACHINE:4-40 X 0.625 INCH,PNH STL	83385	OBD
-173	210-0586-00			2	NUT,PLAIN,EXT W:4-40 X 0.25 INCH,STL	78189	OBD
-174	210-0201-00			1	TERMINAL,LUG:SE #4	78189	2104-04-00-2520N
					- - - * - - -		
-175	200-0072-00			1	NUT,PLAIN,KNURL:	80009	200-0072-00
-176	355-0503-00			1	STUD,SHOULDERED:	80009	355-0503-00
					(ATTACHING PARTS)		
-177	210-0410-00			1	NUT,PLAIN,HEX.:10-32 X 0.312 INCH,BRS	73743	2X20003-402
-178	210-0010-00			1	WASHER,LOCK:INT,0.20 ID X0.376" OD,STL	78189	1210-00-00-0541C
					- - - * - - -		
-179	----- -----			1	CONNECTOR,RCPT,:(SEE J626 EPL)		
					(ATTACHING PARTS)		
-180	343-0617-00			1	RETAINER,CONN:PLUG GUIDE	80009	343-0617-00
-181	211-0097-00			2	SCREW,MACHINE:4-40 X 0.312 INCH,PNH STL	83385	OBD
					- - - * - - -		
-182	----- -----			2	JACK,TELEPHONE:(SEE J1401 & J1461 EPL)		
-183	333-2333-00			1	PANEL,REAR:413	80009	333-2333-00
					(ATTACHING PARTS)		
-184	210-0586-00			4	NUT,PLAIN,EXT W:4-40 X 0.25 INCH,STL	78189	OBD
					- - - * - - -		
	198-3584-00			1	WIRE SET,ELEC:	80009	198-3584-00

Fig. & Index No.	Tektronix Part No.	Serial/Model No. Eff	Dscont	Qty	1 2 3 4 5 Name & Description	Mfr Code	Mfr Part Number
2-185	175-0825-00			FT	. WIRE,ELECTRICAL:2 WIRE RIBBON,1.67 FT L	08261	OBD
-186	175-0826-00			FT	. WIRE,ELECTRICAL:3 WIRE RIBBON,2.793 FT L	80009	175-0826-00
-187	175-0827-00			FT	. WIRE,ELECTRICAL:4 WIRE RIBBON,1.852 FT L	08261	OBD
-188	175-0828-00			FT	. WIRE,ELECTRICAL:5 WIRE RIBBON,1.104 FT L	08261	OBD
-189	175-0829-00			FT	. WIRE,ELECTRICAL:6 WIRE RIBBON,3.478 FT L	08261	OBD
-190	175-0830-00			FT	. WIRE,ELECTRICAL:7 WIRE RIBBON,1.230 FT L	08261	OBD
-191	175-0832-00			1	. WIRE,ELECTRICAL:9 WIRE RIBBON,0.334 FT L	08261	OBD
-192	175-0833-00			1	. WIRE,ELECTRICAL:10 WIRE RIBBON,0.354 FT L	08261	OBD
-193	352-0169-00			1	. CONN BODY,PL,EL:2 WIRE BLACK	80009	352-0169-00
	352-0169-04			1	. CONN BODY,PL,EL:2 WIRE YELLOW	80009	352-0169-04
	352-0169-05			1	. CONN BODY,PL,EL:2 WIRE GREEN	80009	352-0169-05
-194	352-0161-01			3	. CONN BODY,PL,EL:3 WIRE BROWN	80009	352-0161-01
	352-0161-02			2	. CONN BODY,PL,EL:3 WIRE RED	80009	352-0161-02
	352-0161-03			2	. CONN BODY,PL,EL:3 WIRE ORANGE	80009	352-0161-03
	352-0161-04			1	. CONN BODY,PL,EL:3 WIRE YELLOW	80009	352-0161-04
	352-0161-08			1	. CONN BODY,PL,EL:3 WIRE GRAY	80009	352-0161-08
-195	352-0162-08			2	. CONN BODY,PL,EL:4 WIRE GRAY	80009	352-0162-08
-196	352-0163-04			1	. CONN BODY,PL,EL:5 WIRE YELLOW	80009	352-0163-04
	352-0163-05			1	. CONN BODY,PL,EL:5 WIRE GREEN	80009	352-0163-05
-197	352-0164-01			2	. CONN BODY,PL,EL:6 WIRE BROWN	80009	352-0164-01
	352-0164-02			1	. CONN BODY,PL,EL:6 WIRE RED	80009	352-0164-02
	352-0164-04			1	. CONN BODY,PL,EL:6 WIRE YELLOW	80009	352-0164-04
	352-0164-07			2	. CONN BODY,PL,EL:6 WIRE VIOLET	80009	352-0164-07
	352-0164-08			2	. CONN BODY,PL,EL:6 WIRE GRAY	80009	352-0164-08
	352-0164-09			2	. CONN BODY,PL,EL:6 WIRE WHITE	80009	352-0164-09
-198	352-0165-05			1	. CONN BODY,PL,EL:7 WIRE GREEN	80009	352-0165-05
	352-0165-07			2	. CONN BODY,PL,EL:7 WIRE VIOLET	80009	352-0165-07
	352-0167-02			2	. CONN BODY,PL,EL:9 WIRE RED	80009	352-0167-02
-199	352-0168-03			2	. CONN BODY,PL,EL:10 WIRE ORANGE	80009	352-0168-03
	352-0168-05			1	. CONN BODY,PL,EL:10 WIRE GREEN	80009	352-0168-05
	352-0168-06			1	. CONN BODY,PL,EL:10 WIRE BLUE	80009	352-0168-06
	352-0168-06			1	. CONN BODY,PL,EL:10 WIRE BLUE	80009	352-0168-06
-200	352-0200-00			1	. CONN BODY,PL,EL:4 WIRE BLACK	80009	352-0200-00
	352-0200-01			1	. CONN BODY,PL,EL:4 WIRE BROWN	80009	352-0200-01
-201	131-0621-00			3	. CONTACT,ELEC:0.577"L,22-26 AWG WIRE	22526	46233
-202	131-0707-00			175	. CONTACT,ELEC:0.48"L,22-26 AWG WIRE	22526	75691-005
-203	131-0792-00			2	. CONTACT,ELEC:0.577"L,18-20 AWG WIRE	22526	46221
-204	----- -----			1	. LIGHT,IND:(SEE DS1585 EPL)		
-205	348-0003-00			1	. GROMMET,RUBBER:0.312 INCH DIAMETER	70485	1411B6040

FIG. 1 FRONT & CABINET

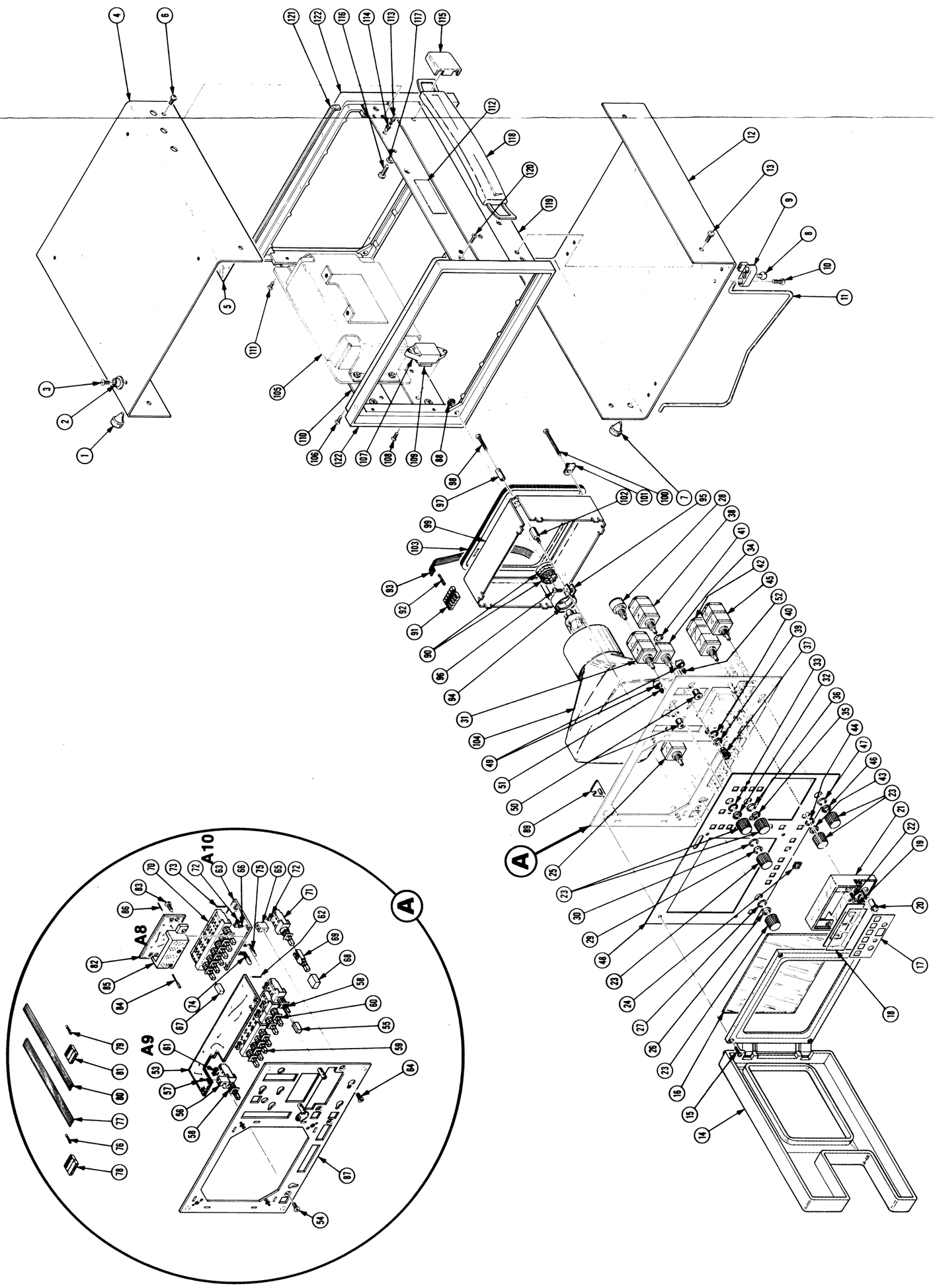
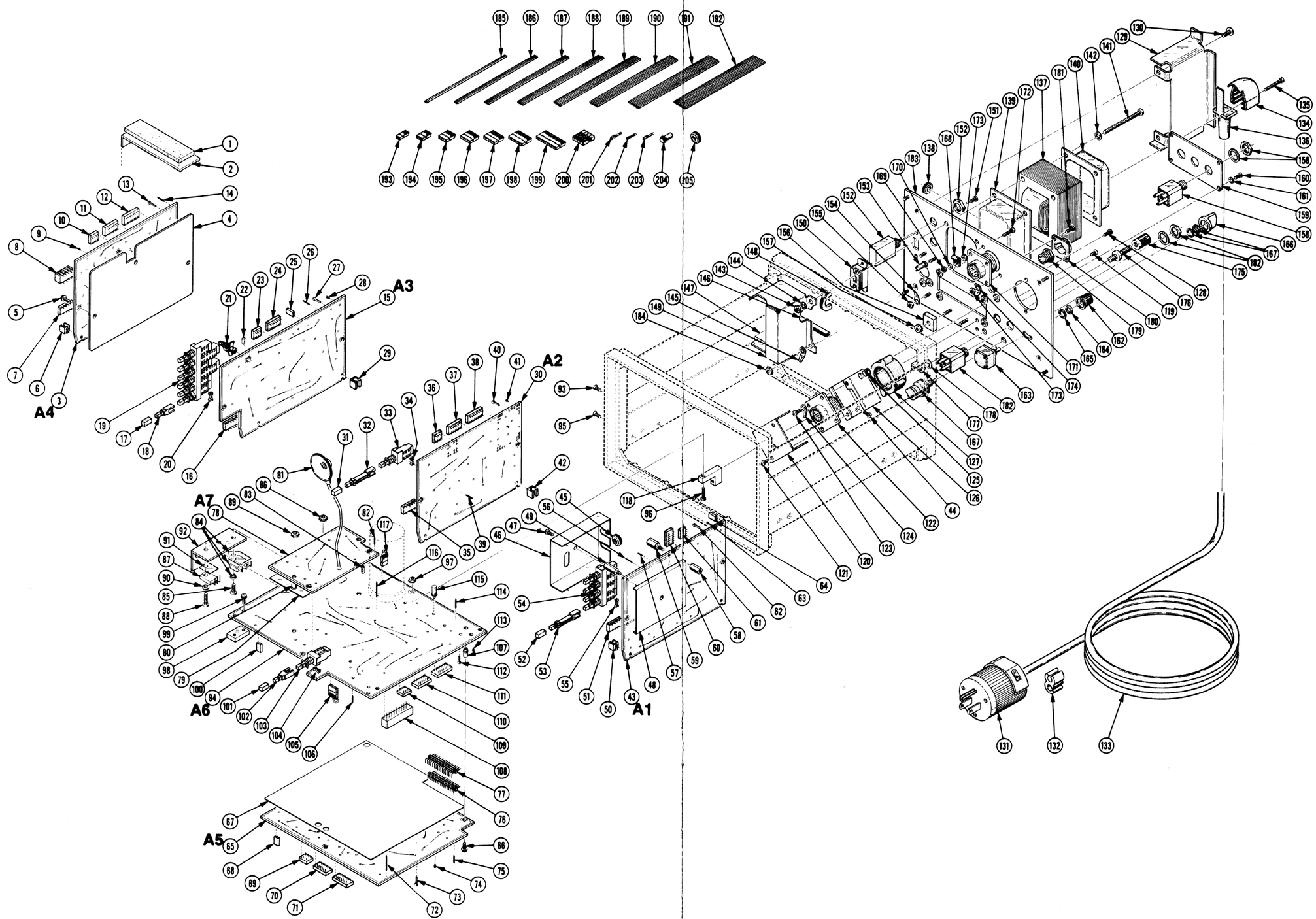
FIG. 2 CHASSIS & REAR