TEKTRONIX®

T.E.
CAL.
LAB
4-11-83

T932/T935
35 MHz
PORTABLE OSCILLOSCOPE

INSTRUCTION MANUAL

Tektronix, Inc.
P.O. Box 500
Beaverton, Oregon 97077

Serial Number _____

070-1983-01

First Printing OCT 75

WARRANTY

All TEKTRONIX instruments are warranted against defective materials and workmanship for one year. Any questions with respect to the warranty should be taken up with your TEKTRONIX Field Engineer or representative.

All requests for repairs and replacement parts should be directed to the TEKTRONIX Field Office or representative in your area. This will assure you the fastest possible service. Please include the instrument Type Number or Part Number and Serial Number with all requests for parts or service.

Specifications and price change privileges reserved.

U.S.A. and foreign Tektronix products covered by U.S. and foreign patents and/or patents pending.

TABLE OF CONTENTS

LIST OF ILLUSTRATIONS

LIST OF TABLES

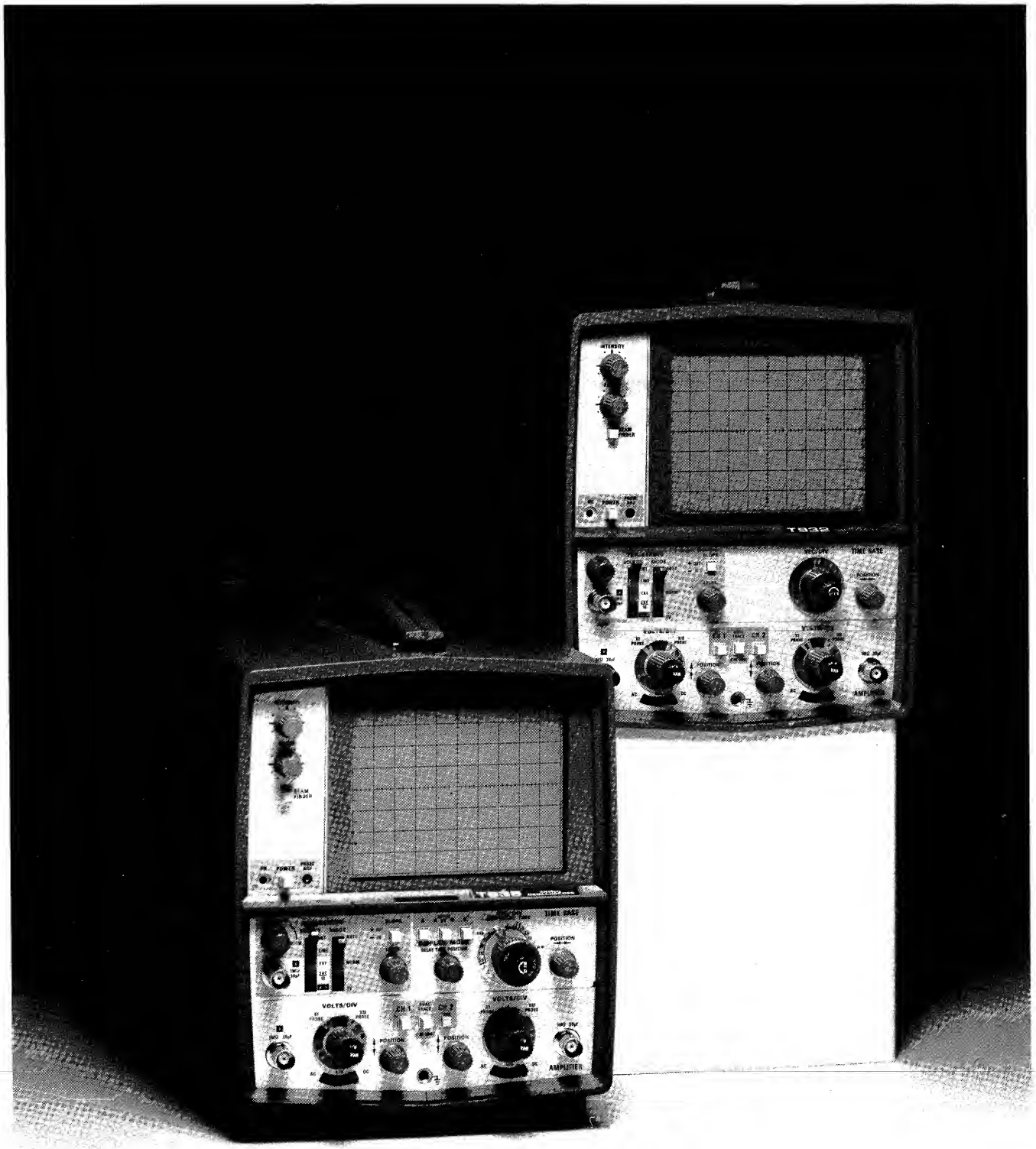

1983-1

Fig. 1-1. T932/T935 35 MHz Oscilloscopes.

SPECIFICATIONS

This manual includes instructions for both the T932 and the T935 portable oscilloscopes. The T932 is a 35 MHz, dual trace oscilloscope and the T935 is a 35 MHz, dual trace oscilloscope capable of delayed sweep operation. The Vertical Amplifier provides calibrated deflection factors from 2 mV to 10 V/div. The Time Base provides stable triggering over the full bandwidth of the Vertical Amplifier and provides calibrated sweep rates from 0.5 s/div to 0.1 μs/div. A variable X1 to X10 magnifier extends the maximum sweep rate to 20 ns/div.

The following instrument specifications apply over an ambient temperature range of 0 to +45° C unless otherwise indicated. The adjustment procedures in Section 4, when performed completely, allow the T932 and the T935 to meet the electrical specifications listed in Table 1-1.

TABLE 1-1

Electrical

Characteristic	Performance Requirement
A. DISPLAY	
Probe Adjust Output	
Voltage (0° C to +40° C)	Approximately 0.5 V.
Repetition Rate	Approximately 1 kHz.
Z-Axis Input	
Sensitivity	5 volt signal causes a noticeable decrease in intensity.
Signal Polarity	Positive going from ground.
Usable Frequency Range	Dc to 5 MHz.
Maximum Input Voltage	30 V (dc + peak ac) 30 V p-p at 1 kHz or less.
Input Impedance	Approximately 10 kΩ.
Power Source	
Line Voltage Ranges (ac,rms)	
120 V Range	HI—108 to 132 V. LO—90 to 110 V.
240 V Range	HI—216 to 250 V. LO—198 to 242 V.
Line Frequency	50 to 60 Hz.
Maximum Power Consumption	36 W, 0.35 A at 60 Hz, 120 V line.
CRT Display	
Display Area	8 x 10 cm.
Trace Rotation Range	Adequate to align trace with horizontal center line.
Standard Phosophor	P31.
Nominal Accelerating Potential	12,400 V.

Characteristic	Performance Requirement
B. VERTICAL AMPLIFIER	
Deflection Factor	
Range	2 mV/div to 10 V/div; 12 steps in a 1-2-5 sequence.
Accuracy	
+20° C to +30° C	Within 3%.
0° C to +45° C	Within 4%.
Uncalibrated (VAR) Range	Continuously variable between settings. Extends deflection factor to at least 25 V/div (at least 2.5:1).
Frequency Response	
Bandwidth	Dc to at least 35 MHz (5 division reference signal centered vertically from a 25 Ω source with VOLTS/DIV VAR control in calibrated detent).
Chopped Mode Repetition Rate	Approximately 250 kHz.
Input Resistance	Approximately 1 MΩ.
Maximum Input Voltage	
DC Coupled	400 V (dc + peak ac). 800 V (p-p ac) at 1 kHz or less.
AC Coupled	400 V (dc + peak ac). 800 V (p-p ac) at 1 kHz or less.

TABLE 1-1 (cont)

Characteristic	Performance Requirement
C. TIME BASE	
Sweep Rate	
Calibrated Range (T932)	0.5 s/div to 0.1 μs/div; 21 steps in a 1-2-5 sequence. Variable X1 to X10 magnifier extends maximum sweep rate to 10 ns/div.
Calibrated Range (T935) A Sweep	0.5 s to 0.1 μs/div; 21 steps in a 1-2-5 sequence. Variable X1 to X10 magnifier extends maximum sweep rate to 10 ns/div.
B Sweep	50 ms to 0.1 μs/div; 18 steps in a 1-2-5 sequence. Variable X1 to X10 magnifier extends maximum sweep rate to 10 ns/div.
Accuracy	Accuracy specification applies over center 8 divisions. Exclude first 50 ns of sweep for both magnified and unmagnified sweep rates and anything beyond the 100th magnified division.
+20° C to +30° C	
Unmagnified	Within 3%.
Magnified	Within 5%.
0° C to +45° C	
Unmagnified	Within 4%.
Magnified	Within 6%.
Variable Magnifier	10:1 (In the X10 position, the sweep speed is one tenth of the SEC/DIV switch setting.).
Delay Time Position Range (T935)	0.5 to 10 div.
Delay Time Jitter (T935)	One part or less in 10,000 (0.01%) of one tenth of the SEC/DIV switch setting.

Characteristic	Performance Requirement
C. TIME BASE (cont)	
X-Y Operation	
Deflection Factor	
Variable Magnifier	
X10	Approximately 100 mV/div.
X1	Approximately 1 V/div.
X-Axis Bandwidth	Dc to at least 2 MHz with 10 div reference signal.
Input Resistance	Approximately 1 MΩ.
Input Capacitance	Approximately 30 pF.
Triggering	
Sensitivity	0.5 div internal or 100 mV external from 2 Hz to 2 MHz, increasing to 1.5 div internal or 150 mV external at 35 MHz.
TV Sync	Composite sync 1 div internal or 100 mV external (approximately 2.3 div or 230 mV of composite video).
External Trigger Input	
Maximum Input Voltage	400 V (dc + peak ac). 800 V (p-p ac) (1 kHz or less).
Input Resistance	Approximately 1 MΩ.
Input Capacitance	Approximately 30 pF.
Level Range	
EXT	+0.5 V to −0.5 V.
EXT / 10	+5 V to −5V.

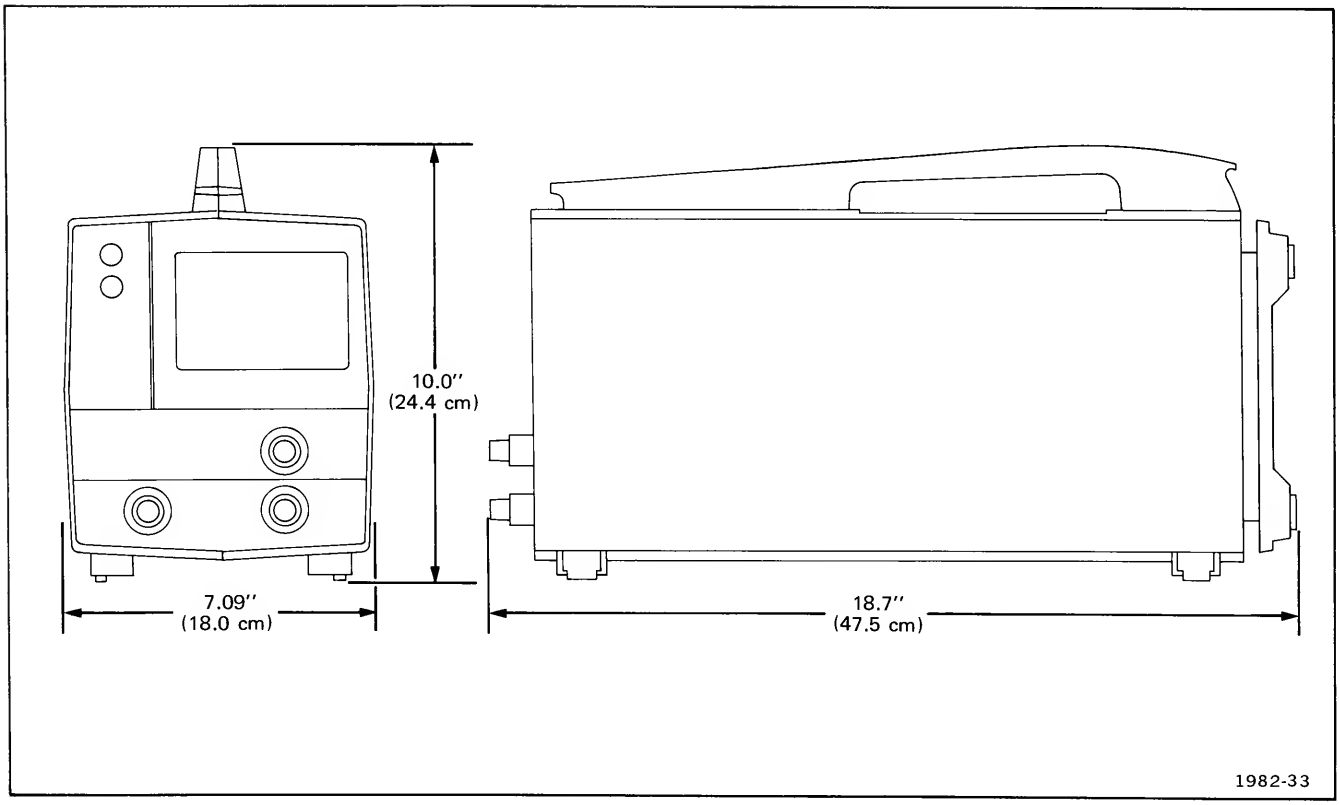

Fig. 1-2. T932/T935 dimensional drawing.

TABLE 1-2

Environmental

Characteristic	Performance Requirement
Temperature	
Storage	−55° C to +75° C.
Operating	0° C to +45° C.
Altitude	
Storage	To 50,000 ft.
Operating	To 15,000 ft. Maximum operating temperature decreases 1° C/1,000 ft. above 5,000 ft.

TABLE 1-3

Physical

Characteristic	Performance Requirement
Weight	
With Panel Cover, Accessories and Accessory Pouch	15.5 lbs. (7.0 kg).
Without Panel Cover, Accessories and Accessory Pouch	15.0 lbs. (6.8 kg).
Overall Dimensions	Refer to Fig. 1-2.

STANDARD ACCESSORIES

1	Instruction Manual	070-1983-01
2	Probes	010-6108-03

RECOMMENDED ACCESSORIES

NOTE

The following accessories have been selected from our catalog specifically for your instrument. They are listed as a convenience to help you meet your measurement needs. For detailed information and prices, refer to a Tektronix Products Catalog or contact your local Tektronix Field Representative.

COVERS

FRONT COVER: Protects the instrument front panel during transport or storage and provides storage for small accessories (probes, cables, etc.). Made of blue plastic to match the instrument case.

Order **016-0340-00**

PROTECTIVE WATERPROOF COVER: Blue vinyl cover provides protection for the entire oscilloscope during transport or storage.

Order **016-0361-00**

STAND

PORTABLE STAND: The Portable Stand sits on the floor and holds the instrument at an angle to provide easy viewing and access. Also provides storage for small accessories (probe, cables, etc.).

Order **209**

PROBES

P6101 GENERAL PURPOSE 1X VOLTAGE PROBE: Input capacitance is 54 picofarads (plus input capacitance of oscilloscope).

Order **010-6101-03**

P6062A SWITCHABLE 1X-10X VOLTAGE PROBE: Provides full bandwidth capabilities of T900-series instruments. Can be compensated to match the vertical input capacitance.

Order **010-6062-13**

P6009 GENERAL PURPOSE 100X VOLTAGE PROBE: Provides full bandwidth capabilities of T900-series instruments. Can be compensated to match the vertical input capacitance.

Order **010-0264-01**

P6015 GENERAL PURPOSE 1000X VOLTAGE PROBE: Provides full bandwidth capabilities of T900-series instruments. Can be compensated to match the vertical input capacitance.

Order **010-0172-00**

P6021 AC CURRENT PROBE: Provides a bandwidth from 120 Hz to the upper bandwidth of T900-series instruments. Spring-loaded slide opens (up to 0.150 inches) to allow measurement of current without breaking the circuit under test.

Order **015-0140-02**

CAMERAS

C-5A Option 3 Camera: Provides graticule illumination with xenon flash lamp powered by two AA penlight batteries. Recommended for, and molded to fit all bench version T900-series instruments. Fixed focus, fixed aperfure *f*16 lens with 0.67 or 0.85 user adjustable magnification. Mechanical shutter with speeds of 1/5 to 1/25 s, plus bulb and time.

Order . . . . . **C-5A Option 3**

OPERATING INSTRUCTIONS

OPERATING VOLTAGE

The T932 and T935 will operate from either a 120 V or 240 V ac, 50 to 60 Hz nominal power input source. To avoid equipment damage, the power input range selector switch (120 V or 240 V) and HI/LO switch on the bottom of the instrument must be set to positions which include the value of the applied power input voltage. The POWER indicator lamp will blink when the applied power input voltage varies more than about 10% from the value for which the switches are set.

WARNING

To avoid electric shock and equipment damage, do not attempt to replace the internal fuse or change the settings of the power input range selector switch or HI/LO switch. This must be done by qualified service personnel only.

SAFETY INFORMATION

The T932 and T935 operate from a single-phase power source with one of the current-carrying conductors (the neutral conductor) at ground (earth) potential. Operation from power sources where both current-carrying conductors are live with respect to ground (such as phase-to-phase on a 3-wire system) is not recommended, since only the line conductor has over-current (fuse) protection within the instrument.

The T932 and T935 each have a 3-wire cord with a 3-terminal polarized plug for connection to the power source and safety-earth. The ground terminal of the plug is directly connected to the metal parts of the instrument. For electric-shock protection, insert this plug in a mating outlet with a safety-earth contact.

FUNCTIONS OF CONTROLS, CONNECTORS, AND INDICATORS

Before you turn the instrument on, read this portion of the manual to familiarize yourself with the controls, connectors, and indicators.

A. DISPLAY

Front Panel (Fig. 2-1)

(1) **INTENSITY**—Adjusts the brightness of the crt display. Set for the lowest visible display to prolong crt life.

(2) **FOCUS**—Adjusts for optimum spot size and definition.

(3) **BEAM FINDER**—Locates off-screen displays. Compresses the crt display to within the graticule area independently of the position control or applied signals.

To locate an off-screen display:

a. Set the vertical POSITION and INTENSITY controls to midrange and rotate the horizontal POSITION control clockwise.

b. If a display or dot still is not visible, press BEAM FINDER and hold in. A compressed display or dot should appear. If not, increase the INTENSITY until a display appears.

If a dot or vertical line appears, the sweep is not triggered. Set the trigger MODE switch to AUTO to obtain a display. Use the vertical and horizontal POSITION controls to move the display near the center of the graticule. Release the BEAM FINDER button and adjust the trigger level control for a stable display.

If a compressed display appears, adjust the VOLTS/DIV switch and the horizontal and vertical POSITION controls for a stable display.

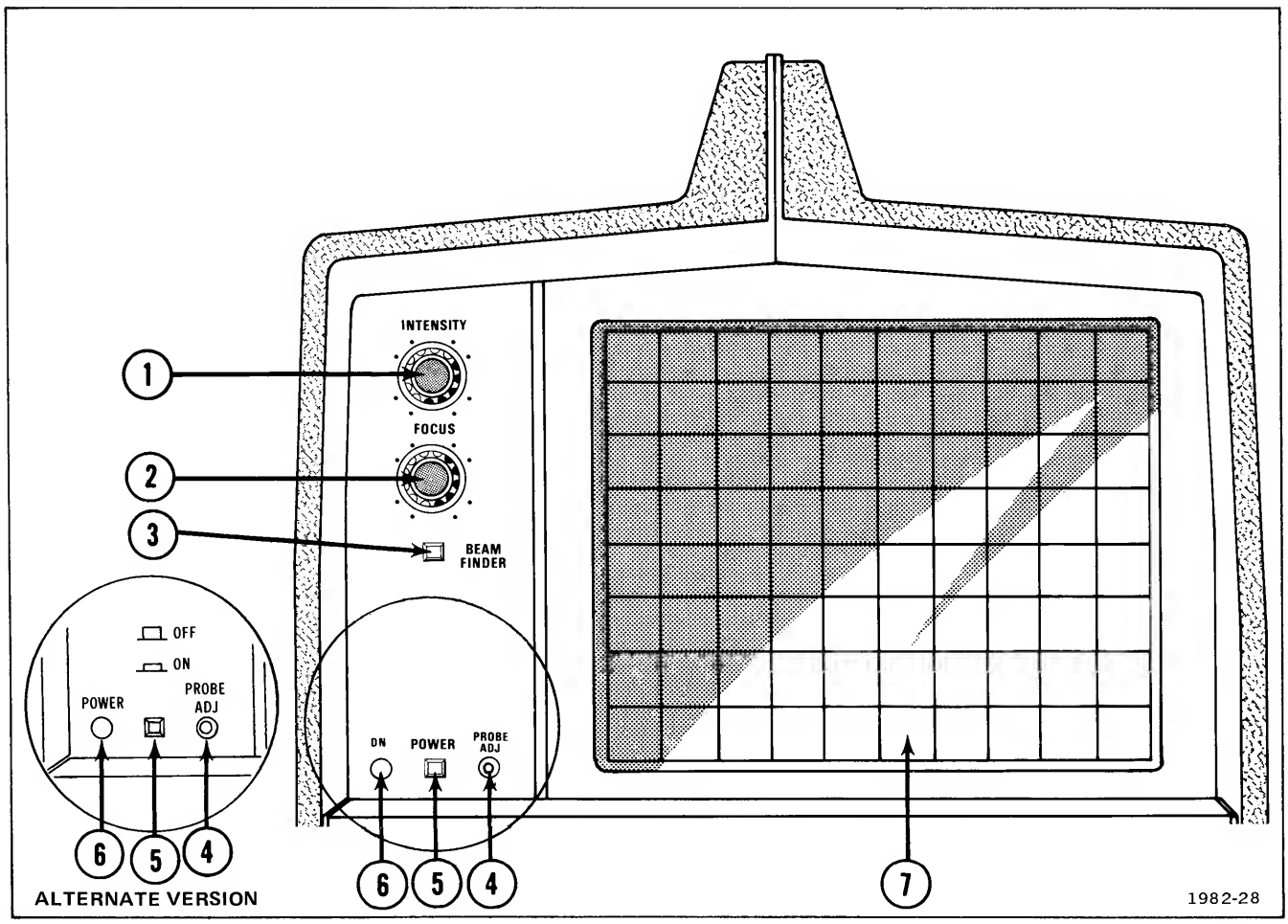

Fig. 2-1. Display front panel controls and connectors.

(4) **PROBE ADJ**—Provides a square-wave output of approximately 0.5 V (negative-going with respect to ground) at approximately 1 kHz, for compensating voltage probes.

(5) **ON-OFF**—Push-push switch turns the instrument power on (button in) and off (button out). (In some versions this switch is labeled POWER.)

(6) **POWER**—Indicator lamp lights when ON-OFF button is depressed to ON (in) position and applied power input voltage does not vary more than about 10% from the value indicated by the 120 V/240 V and HI/LO voltage selector switch settings. When applied power input voltage varies more than about 10% (either high or low) from the selected value, the lamp will blink. (In some versions this lamp is labeled ON.)

(7) **Internal graticule**—Eliminates parallax. Risetime, amplitude, and measurement points are indicated at the left edge of the graticule.

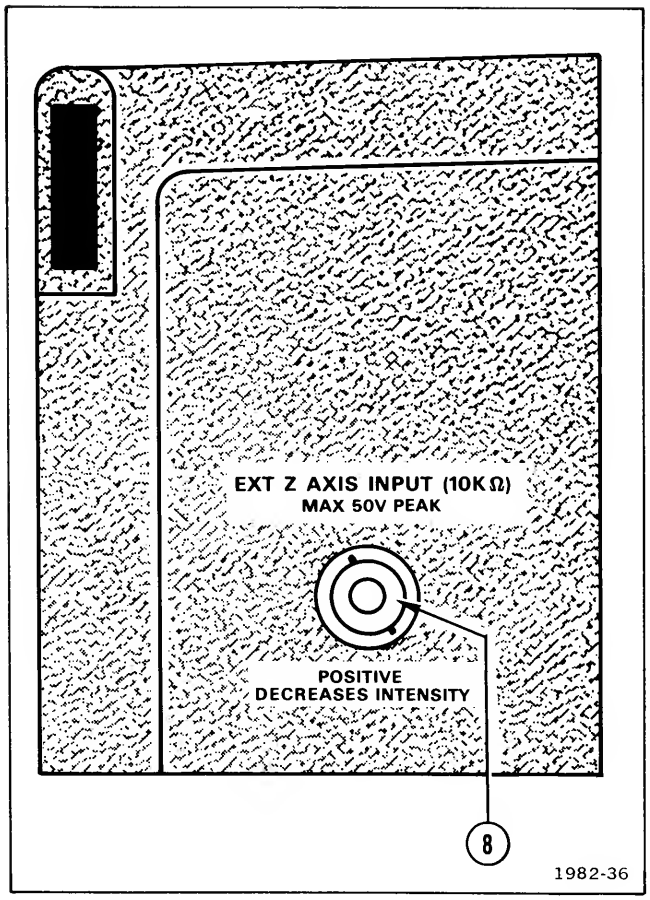

Fig. 2-2. Rear panel controls and connectors.

Rear Panel (Fig. 2-2)

(8) **EXT Z-AXIS IN**—BNC connector for applying signals to intensity modulate the crt display. Signals must be time-related to the display for a stable display.

Left Side of Cabinet (Fig. 2-3)

(9) **ASTIG**—Screwdriver adjustment used with FOCUS control to obtain a well-defined display. Requires little or no adjustment once set.

(10) **TR ROT**—Trace rotation screwdriver adjustment. Aligns trace with the horizontal graticule lines.

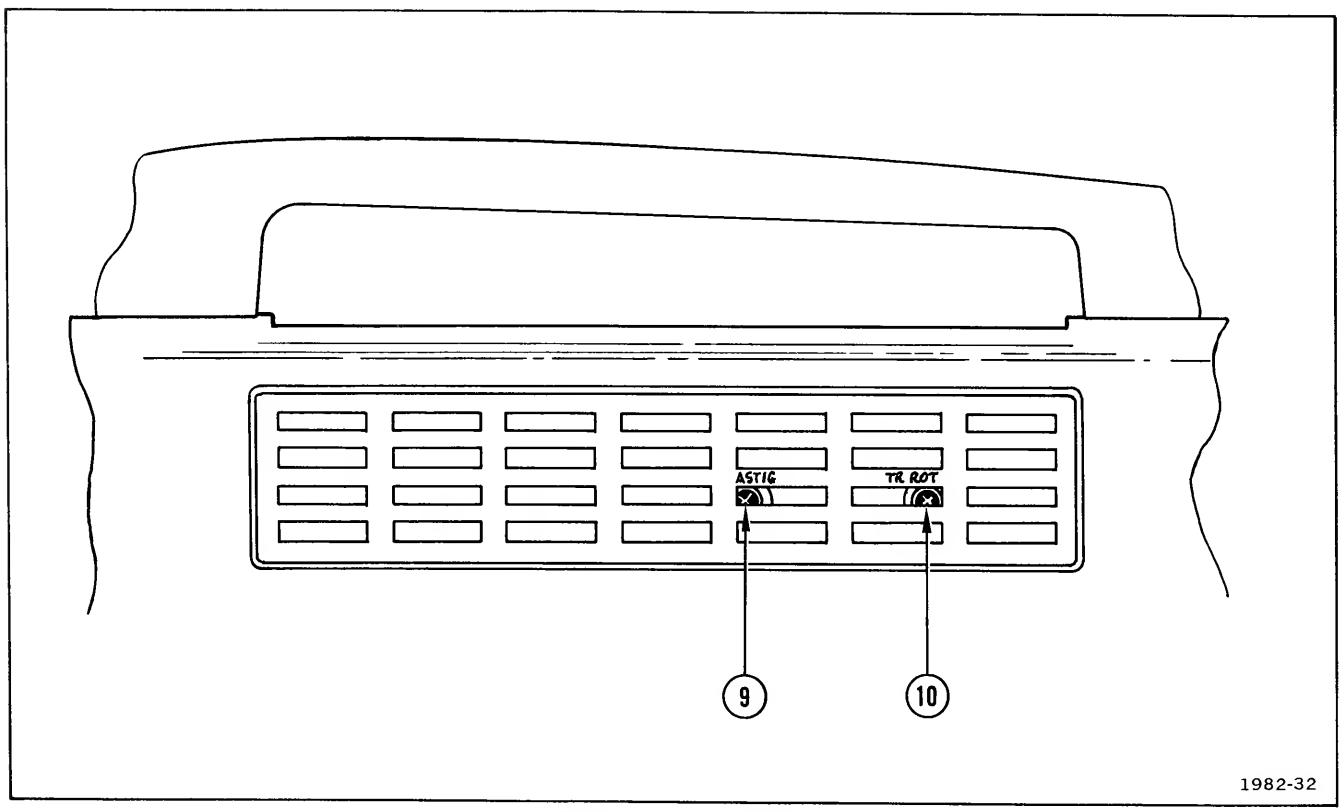

Fig. 2-3. Left side of cabinet.

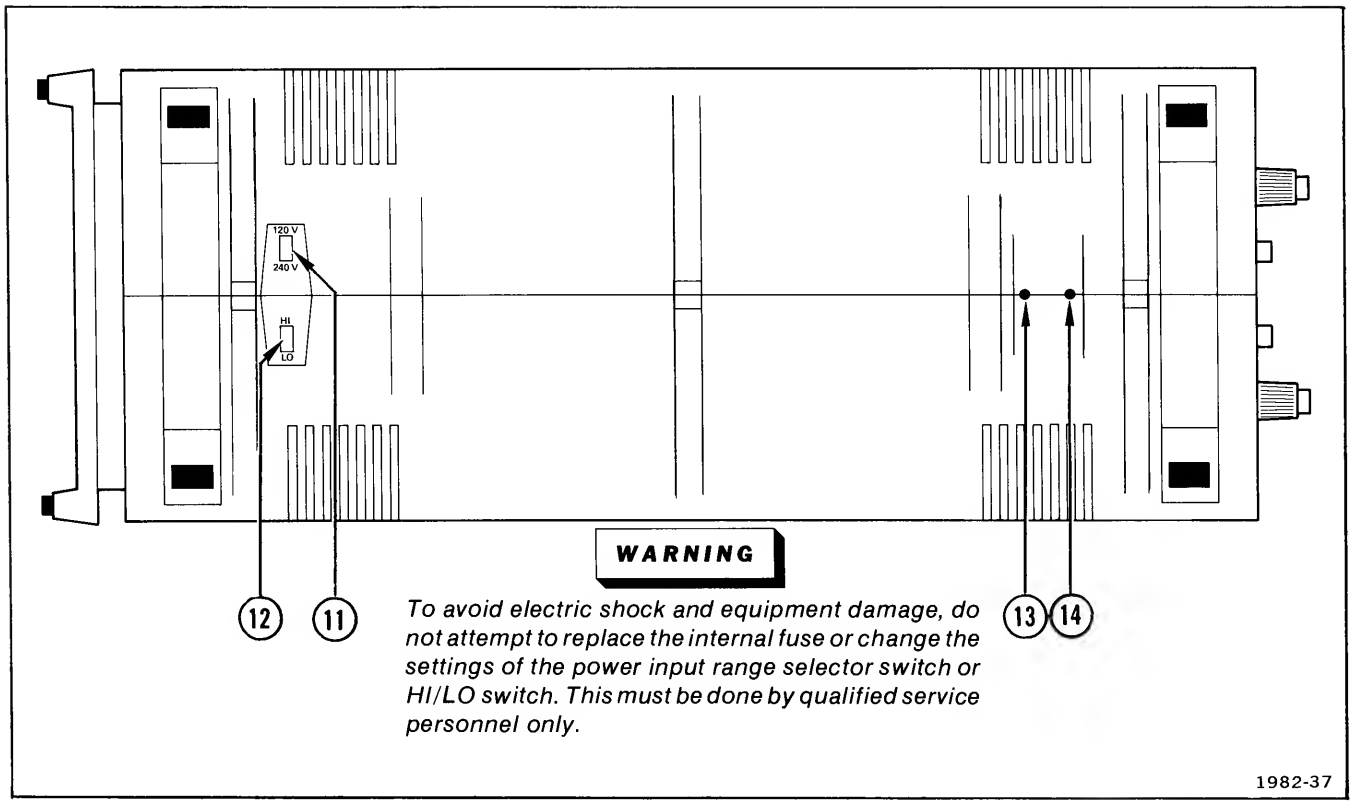

Fig. 2-4. Bottom of cabinet.

Bottom of Cabinet (Fig. 2-4)

(11) **120 V/240 V**—Screwdriver actuated switch selects either 120 V or 240 V nominal power input voltage.

WARNING

To avoid electric shock and equipment damage, do not attempt to change the power input range selector switch, HI/LO switch, or internal fuse. This must be done by qualified service personnel only.

(12) **HI/LO**—Screwdriver actuated switch selects either high or low nominal line-voltage regulating range: LO selects 100 V or 220 V and HI selects 120 V or 240 V.

(13) **CH 1 DC BAL**—Screwdriver adjustment. When properly adjusted, prevents trace shift when switching between adjacent positions of the CH 1 VOLTS/DIV switch.

(14) **CH 2 DC BAL**—Screwdriver adjustment. When properly adjusted, prevents trace shift when switching between adjacent positions of the CH 2 VOLTS/DIV switch.

B. VERTICAL AMPLIFIER

Front Panel (Fig. 2-5)

(1) **VOLTS/DIV**—Selects the vertical deflection factor in a 1-2-5 sequence (VAR control must be in detent position to obtain the indicated deflection factors). Read the correct deflection factor for a 1X probe from the 1X position and a 10X probe from the 10X position.

(2) **VAR**—Provides continuously variable uncalibrated deflection factors between the calibrated steps of the VOLTS/DIV switches. Extends the maximum deflection factor to 25 V/div in the 10 V position. Detent position provides calibrated VOLTS/DIV deflection factors.

(3) **Input Coupling**—Selects the method of coupling the input signal to the vertical input signal amplifier.

AC: Signals are coupled capacitively. Any dc signal component is blocked. Low frequencies are attenuated (3 dB down at about 1 Hz using a 10X probe). Ac coupling causes tilting of square waves below about 1 kHz.

GND: Grounds the input of the vertical amplifier to provide a ground reference display. Connects the input signal to ground through the input coupling capacitor and a 1 MΩ resistor to allow the input coupling capacitor to be precharged by the input signal.

DC: All components of the input signal are passed to the vertical amplifier.

(4) **Channel 1 or Y Input**—Connector for applying an external signal to the vertical deflection system. Provides the Y input in the X-Y mode when CH 1 vertical mode button is in.

(5) **Channel 2 Input**—Connector for applying an external signal to the vertical deflection system.

(6) **POSITION**—Controls the vertical position of the crt display.

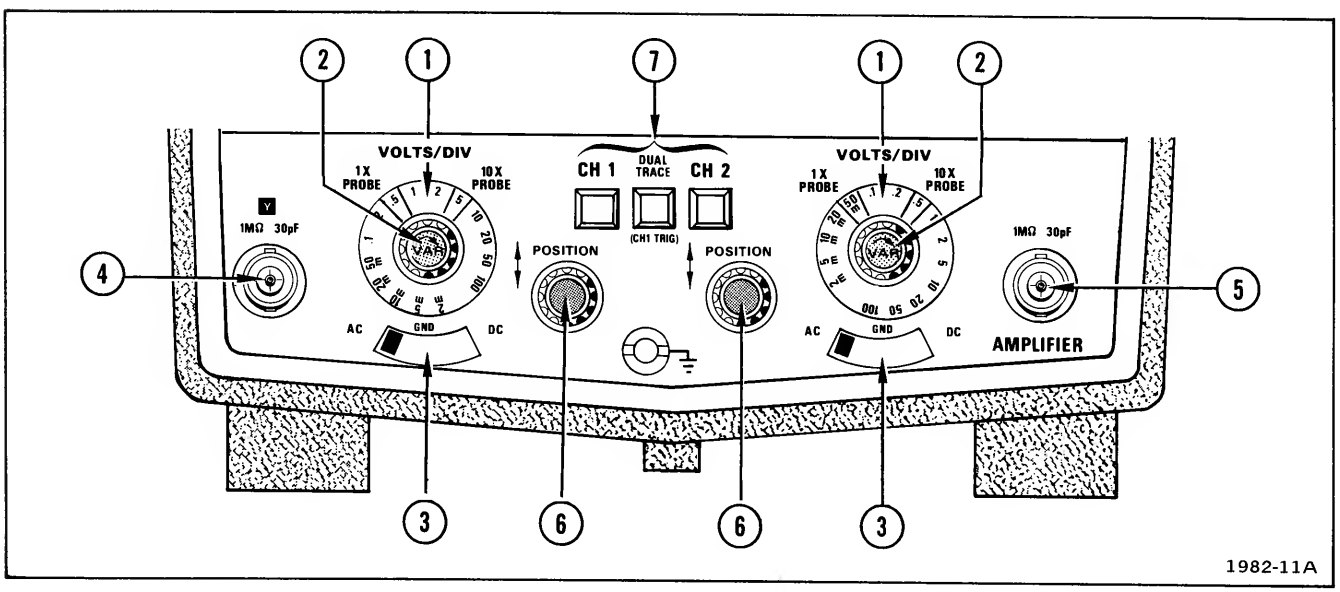

Fig. 2-5. Vertical Amplifier front panel controls and connectors.

(7) **Vertical Mode**—Selects the vertical amplifier operating mode.

CH 1: Displays only signals applied to the CH 1 input connector. This button must be latched in for X-Y operation.

CH 2: Displays only signals applied to the CH 2 input connector.

DUAL TRACE: Displays CH 1 and CH 2 input signals alternately. Chop or Alternate mode is selected automatically by the SEC/DIV switch. For SEC/DIV switch settings of 1 ms and slower, Chop is selected. For settings of .5 ms and faster, Alternate is selected. In DUAL TRACE mode, the trigger signal is derived from CH 1. When the DUAL TRACE and CH 2 buttons are locked in at the same time, the trigger signal comes from CH 2 (instead of CH 1) while DUAL TRACE signals are displayed.

C. TIME BASE

Front Panel (Fig. 2-6)

(1) **SOURCE**—Selects the source of the trigger signal.

INT: Uses a sample of the signal displayed on the crt as a trigger signal in the CH 1 or CH 2 modes. In DUAL TRACE mode, the trigger signal is obtained from CH 1. If CH 2 and DUAL TRACE buttons are both latched in, channel 2 is the trigger source.

LINE: Uses a sample of the power-line frequency as a trigger signal.

EXT: Permits triggering on signals applied to the X (external trigger) input connector. External trigger signals must be time-related to the displayed signal for a stable display.

EXT ÷ 10: External trigger signal is attenuated by a factor of 10.

X-Y: Permits x-y display. X (horizontal) input is through the X input connector. Y (vertical) input is normally through the CH 1 or Y input connector (Vertical Mode CH 1 button must be latched in). For special applications, the Y input may be obtained from the CH 2 input connector (CH 2 button latched in), or from both CH 1 and CH 2 (DUAL TRACE button latched in).

(2) **MODE**—Selects the operating mode for the trigger circuit.

AUTO: With the proper LEVEL control setting, the sweep can be triggered by trigger signals with repetition rates above about 20 Hz. In the absence of an adequate trigger signal, or when the LEVEL control is misadjusted, the sweep free runs to provide a reference display.

NORM: Permits triggering on displayed signal. In the absence of an adequate trigger signal, or when the LEVEL control is misadjusted, the sweep does not run and no display is visible. Setting SOURCE to LINE position provides an adequate trigger signal.

TV: Permits triggering on television signals. Triggers on TV field when SEC/DIV switch is set at .1 ms or slower. Triggers on TV line when SEC/DIV switch is set at 50 μs or faster. Set the SLOPE switch to +OUT for sync-positive input signals and to −IN for sync-negative input signals.

(3) **SLOPE**—Selects the positive- or negative-going slope of the trigger waveform.

+OUT: The sweep can be triggered from the positive-going portion of a trigger signal.

−IN: The sweep can be triggered from the negative-going portion of a trigger signal.

(4) **LEVEL**—Selects the amplitude point on the trigger signal at which the sweep is triggered. Usually adjusted for the desired display after trigger SOURCE and SLOPE have been selected.

(5) **X (External Trigger)**—Provides input for external trigger signals or for X axis signals in the X-Y mode.

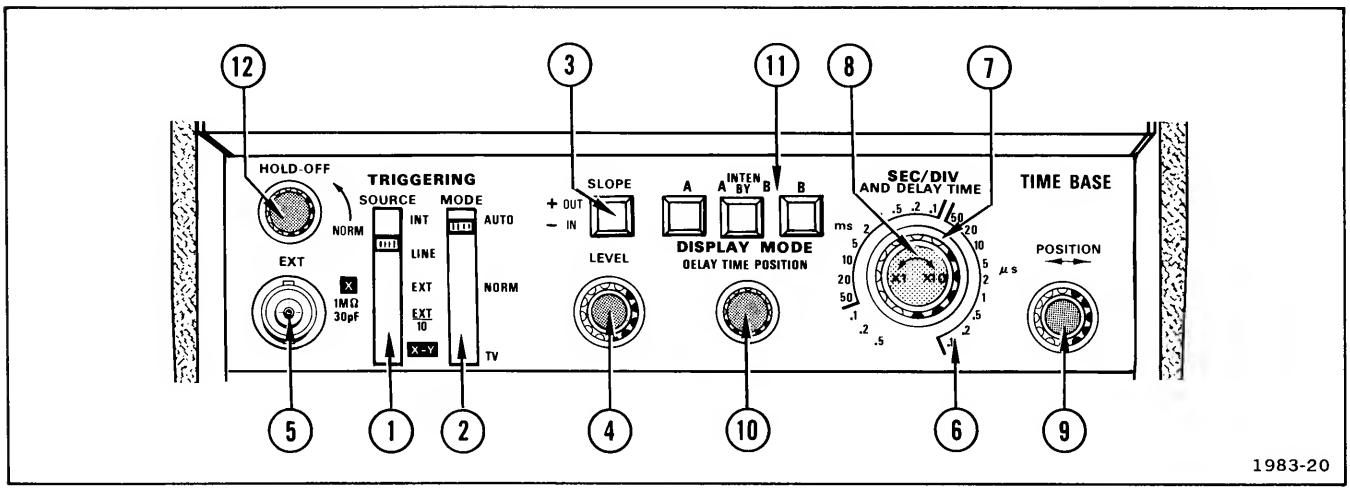

Fig. 2-6. Time Base front panel controls and connectors.

(6) **A SEC/DIV AND DELAY TIME (clear plastic skirt)**—Selects calibrated sweep rates in a 1-2-5 sequence for the A Sweep Generator and the basic delay time for delayed sweep operation. The X1-X10 variable control must be in the X1 detent position (fully counterclockwise) to read calibrated sweep rates directly from the A SEC/DIV knob. Knob numerals with μ underneath indicates sweep rates in microseconds/division, numerals with **m** underneath indicate sweep rates in milliseconds/division, positions with no symbol under the numerals indicate sweep rates in seconds/division.

(7) **B SEC/DIV (black inner knob, pull out and turn to unlock)**—Selects calibrated sweep rates in a 1-2-5 sequence for the B Sweep (delayed sweep) Generator. (B sweep runs at 50 ms in the 0.1, 0.2, and 0.5 positions of the B SEC/DIV switch.)

(8) **X1-X10**—Provides calibrated sweep rates when in X1 (fully ccw) detent position. Increases the horizontal gain by a factor of 10, providing at least 10 ns/div sweep rate in the X10 detent position (fully cw) with the SEC/DIV knob set to .1 μs.

(9) **POSITION**—Controls the horizontal position of the crt display.

(10) **DELAY TIME POSITION**—Provides variable sweep delay from 0.5 to 10.0 times the setting of the A SEC/DIV switch. To find the delay time, multiply the number of divisions between the start of the sweep and the start of the intensified zone times the A SEC/DIV switch setting.

(11) **DISPLAY MODE**—Determines the mode of operation for the horizontal deflection system.

A: The Sweep Generator provides the horizontal deflection. The A SEC/DIV switch determines the sweep rate, and the B Sweep Generator is inoperative.

A INTEN BY B: The A Sweep Generator provides the horizontal deflection and the B Sweep Generator produces an intensified zone after the delay time. The DELAY TIME POSITION control determines the location of the intensified zone. The duration of the intensified zone is determined by the B SEC/DIV switch.

B (delayed): The B Sweep Generator provides the horizontal deflection and the B SEC/DIV switch determines the sweep rate. The A Sweep Generator continues to run, and the start of the B sweep is delayed by a time determined by the A SEC/DIV switch.

(12) **HOLD-OFF**—Varies the hold-off time between sweeps. Allows triggering on aperiodic signals (such as complex digital words). Turn the control fully counterclockwise for the shortest sweep hold-off time and fully clockwise for the longest sweep hold-off time.

FIRST TIME OPERATION

Use this procedure when you turn the instrument on for the first time. It checks that most functions of the instrument are operational. This procedure requires a probe. (10X probes are supplied as standard accessories.) Read the descriptions of the controls and connectors to familiarize yourself with them before you turn your instrument on.

A complete performance check is given in Section 3.

Only the control settings that affect the check being performed are given. Do not move the control settings unless instructed to do so. Start at the beginning and follow the sequence of steps through to the end. If you skip a step or start in the middle of a check, you won't be able to tell whether a particular function is operational.

First, check that the Power Input Voltage Selector switch and the HI/LO Range Selector switch on the bottom of the cabinet are set for your power input voltage. In the United States the Power Input Voltage Selector switch is normally set for 120 V and the HI/LO Range Selector switch is normally set for HI at the factory. In Europe the Power Input Voltage Selector switch is normally set for 240 V and the HI/LO Range Selector is normally set for LO.

CAUTION

Your instrument may be damaged if it is operated from a 240 V power input voltage source with the Power Input Voltage Selector switch set for 120 V. Only qualified service personnel should change the Power Input Voltage Selector switch to a different range.

The POWER indicator lamp will blink when the applied power input voltage varies more than about 10% (either high or low) from the value selected by the 120 V/240 V and HI/LO selector switches.

If the 120 V/240 V and HI/LO switches are properly set, connect the power cord plug to the power source and turn the instrument on. Set the trigger MODE to AUTO, and SOURCE to INT.

You should get a trace on the crt screen. If you don't, push the BEAM FINDER button and hold it in while increasing the INTENSITY (clockwise). A trace, or one or two bright dots, indicates that the instrument is operating. You may also have to adjust the FOCUS and POSITION controls.

Vertical Positioning and Horizontal Operation

1. Set:

LEVEL	Mid-range
A SEC/DIV	1 ms
X1-X10	X1 (fully ccw detent)
Vertical Mode	CH 1
DISPLAY MODE	A

2. Check that the CH 1 POSITION control moves the trace off the top and bottom of the screen. Leave the trace between one and two divisions above the center line. If the trace does not extend across the screen, move the horizontal POSITION control until it does.

3. Set the vertical mode switch for CH 2. Check that the CH 2 POSITION control moves the trace off the top and bottom of the screen. Leave the trace between one and two divisions below the center line.

4. Set the vertical mode switch for DUAL TRACE. You should have two traces on the crt screen—one above the center line and one below.

5. Check that there are two traces at every setting of the SEC/DIV switch from .1 μs to .5 s.

6. Set the SEC/DIV switch to 1 ms and the Vertical Mode switch to CH 1.

FOCUS and INTENSITY Operation

Adjust the FOCUS and the INTENSITY controls for a fine line at a comfortable brightness level.

Trace Rotation and Vertical Input Operation

Most of the remaining checks require applying the PROBE ADJ signal to the inputs.

NOTE

In the following steps, if you use a 1X probe or coaxial cable, use the 1X PROBE window for VOLTS/DIV settings. If you use a 10X probe (as supplied), use the 10X probe window.

The PROBE ADJ output is a square wave. An incorrectly compensated probe will distort the top and bottom of the signal but will not affect the checks.

If you want to compensate a probe, refer to the Probe Compensation information after this procedure.

1. Set:

CH 1 VOLTS/DIV	.2 V (10X window)
CH 1 VAR	Detent (fully cw)
CH 1 AC-GND-DC	GND

2. Using the CH 1 POSITION control, align the trace with the center graticule line. If the trace is tilted, adjust the trace rotation (control marked TR ROT on the left-cabinet side) for the best alignment of the trace with the center graticule line.

3. Connect the probe to the CH 1 input and hold the probe tip against the PROBE ADJ connector. Set the CH 1 AC-GND-DC switch to DC. You should have approximately 2.5 divisions of display. The square wave will be below the center line. This display may or may not be stable.

4. Set the CH 1 AC-GND-DC switch to AC. The display should be approximately equidistant above and below the center line.

NOTE

If you cannot obtain a display, remove the probe tip from the PROBE ADJ connector. Touch the tip to your hand. Change the VOLTS/DIV setting if necessary to get a display. The display should be a thick (vertically) trace. A thickening trace indicates that the probe is picking up the power line radiation that your body normally picks up. If this occurs, the vertical is usable but the PROBE ADJ output isn't. If the thickening does not occur, you have a defective probe or other instrument malfunction.

5. Rotate the CH 1 VAR control through its range. The display amplitude will decrease. Leave the VAR control fully clockwise (detent)—maximum display amplitude.

6. Set:

Vertical Mode	CH 2
CH 2 VOLTS/DIV	.2 V
CH 2 VAR	Detent (fully cw)
CH 2 AC-GND-DC	GND
CH 2 POSITION	To align trace with center graticule line

7. Connect the probe to the CH 2 input and hold the probe tip against the PROBE ADJ connector.

8. Set the CH 2 AC-GND-DC switch to DC. The square wave will be below the center line.

9. Set the CH 2 AC-GND-DC switch to AC. The square wave will be approximately equidistant above and below the center line.

10. Rotate the CH 2 VAR control through its range. The display amplitude will decrease. Leave the VAR control fully clockwise (in detent).

11. Return the vertical mode switch to CH 1.

X-Axis Operation

1. Connect the probe to the X input (if a 1X probe is available, use it, if a 10X probe is used, rotate the X1-X10 control fully clockwise) and hold the probe tip against the PROBE ADJ connector.

2. Set the SOURCE switch to X-Y, and reduce INTENSITY as necessary. Adjust the horizontal POSITION control as needed to locate the display. You should see 2 dots separated by a distance dependent on the X1-X10 control setting. Return X1-X10 to X1 (fully counterclockwise detent).

X-Y and Dual Trace Operation

This mode is usable with SEC/DIV settings of 1 ms or slower. Set controls and connect signals as you would for independent X-Y or Dual Trace operation.

Astigmatism Operation

1. Set: SOURCE INT

2. Connect the probe to the CH 1 input and hold the probe tip against the PROBE ADJ connector. Rotate the LEVEL control for the most stable display. Adjust the FOCUS control for a display with the sharpest edges both horizontally and vertically over the entire screen. Vertical trace thickness is typically more than the horizontal but the edges should be equally sharp. This is easier to observe at the "corners" of the signal.

3. Set the INTENSITY and FOCUS controls for the best defined display. If the display still appears out of focus, use a small screwdriver to adjust the ASTIG control (through left cabinet side) for the best defined display.

4. Rotate the INTENSITY control fully clockwise. The display will get brighter and defocus (get thicker). Return the INTENSITY control to the preferred brightness level.

Ext Z Axis Input Operation

A positive-going signal will cause a decrease in intensity, and a negative-going signal will increase the intensity level of a low-intensity trace.

X1-X10 and Trigger Operation

1. Note a display with several cycles of the PROBE ADJ waveform. Rotate the X1-X10 control fully clockwise to X10 and note that only one cycle is visible. Return control to X1.

2. Set the SEC/DIV to .1 ms. Position the start of the display (left edge) on the screen. Set the SLOPE button to the +OUT position. Rotate the LEVEL control through its range. The start of the display will move along the positive (rising) slope of the signal until the display becomes unstable.

3. Set the LEVEL control for a stable display that starts at about the middle of the slope.

Now set the SLOPE button to −IN position. Rotate the LEVEL control through its range. The start of the display will move along the negative (falling) slope of the signal until the display becomes unstable.

4. Set the LEVEL control for a stable display that starts at about the middle of the slope.

5. Set the MODE switch to NORM. The display should start on the negative slope. In the NORM mode the display will disappear if the LEVEL control is improperly adjusted.

6. Set the SLOPE button to +OUT position. The display should start on the positive slope.

7. Disconnect the probe from the instrument. Set the CH 1 AC-GND-DC switch to GND. The trace should disappear.

8. Set the SOURCE switch to LINE. If a trace doesn't appear, adjust the LEVEL control until a trace appears.

9. Set:

SOURCE	INT
MODE	AUTO
CH 1 AC-GND-DC	AC

Delay Time Position and Delayed Sweep Operation

1. Set:

DISPLAY MODE	A INTEN BY B
DELAY TIME POSITION	Fully ccw

2. The start of the intensified portion of the sweep should be within 0.5 div of the start of the sweep.

3. Rotate the DELAY TIME POSITION control until it is fully clockwise. The start of the intensified portion of the sweep will move until it is at least 10 divisions from the start of the sweep.

4. Set DISPLAY MODE to B. The display will consist of only the intensified portion or delayed (B Sweep) portion.

5. Return the DISPLAY MODE to A INTEN BY B and turn the DELAY TIME POSITION control fully counterclockwise.

6. Set the B SEC/DIV switch to .1 μs. The intensified portion will reduce to a dot. Rotating the DELAY TIME POSITION control will move the dot across the screen.

7. Set:

SOURCE	INT
MODE	AUTO
CH 1 AC-GND-DC	AC

Your instrument is now ready to operate when you apply a signal to the CH 1 input.

PROBE COMPENSATION

An incorrectly-compensated probe is one of the greatest sources of operator error. Most attenuator probes are equipped with adjustments to ensure optimum measurement accuracy.

Some probes are compensated by using a small, insulated screwdriver through an access hole to the compensation adjustment. Other probes may have an adjustment system similar to that shown in Fig. 2-7.

Probe compensation is accomplished as follows:

Set the appropriate VOLTS/DIV switch to .1 V, the AC-GND-DC switch to DC, and the SEC/DIV switch to 2 ms.

Connect the probe to the vertical input and touch the probe tip to the PROBE ADJ connector. Notice a display similar to those shown in Fig. 2-8. Adjust the probe for the correct compensation. The effects of incorrect probe compensation on three types of signals are illustrated in Fig. 2-8.

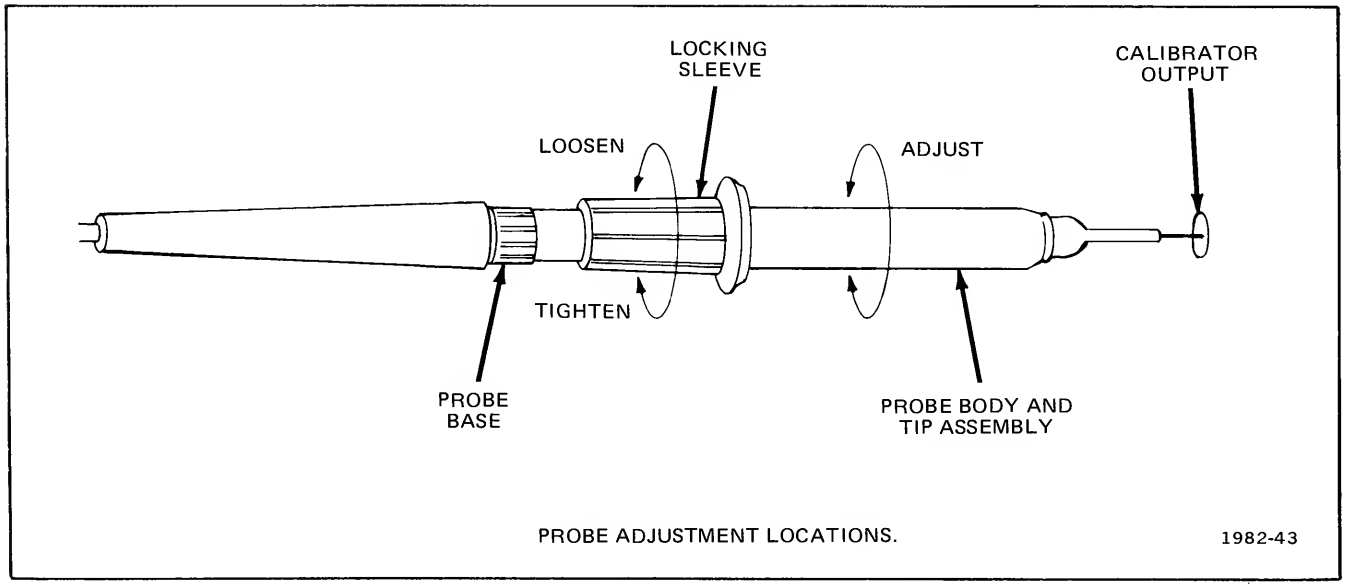

Fig. 2-7. Probe compensation.

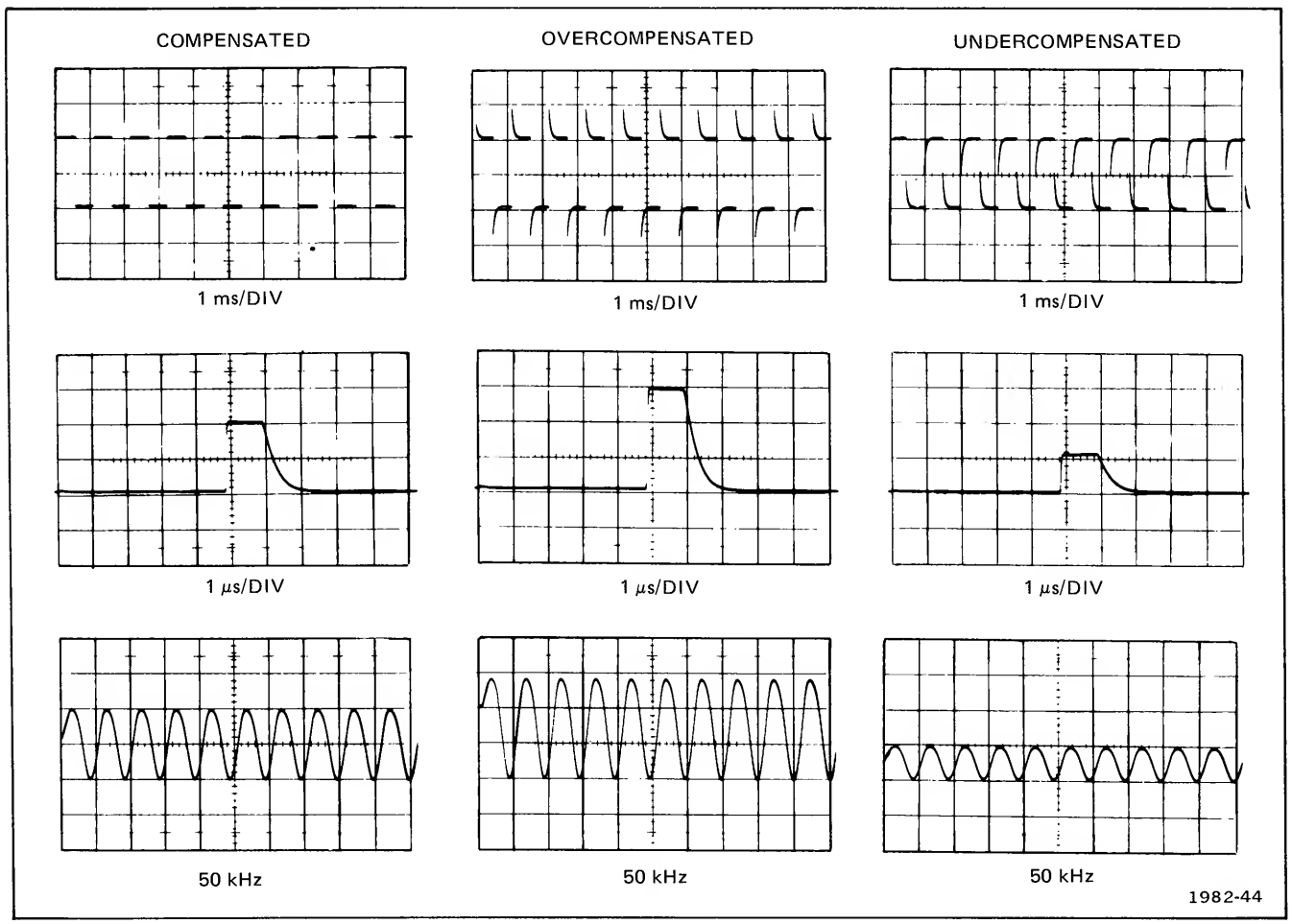

Fig. 2-8. Effects of probe compensation.

APPLICATIONS

Peak-to-Peak Amplitude Measurements

To measure the amplitude of a signal, mulitply the vertical deflection (in divisions) by the VOLTS/DIV switch setting. (Use VOLTS/DIV window to match attenuation factor of probe used.)

Example:

The display amplitude is three divisions (see Fig. 2-9) and the VOLTS/DIV switch is set to .5 V. Substituting the given values:

Amplitude = 3 divisions X 0.5 volt/division = 1.5 V p-p

Instantaneous Amplitude Measurement

The following procedure explains how to measure the amplitude of any point on a waveform with respect to ground.

1. Set the AC-GND-DC switch to DC.

2. Apply the signal to be measured to one of the vertical input connectors. Set the Vertical Mode switch to select the channel used.

3. Obtain a stable display, centered vertically.

4. Set the AC-GND-DC switch to GND. Adjust the trace to some reference line (see Fig. 2-10).

5. Set the AC-GND-DC switch to DC. If the waveform appears above the reference line, the voltage is positive. If the waveform appears below the reference line, the voltage is negative.

6. Measure the vertical difference (in divisions) between the reference line and the desired point on the waveform and multiply by the VOLTS/DIV switch setting.

Example:

The vertical difference is 5 divisions (see Fig. 2-10). The VOLTS/DIV switch is set to 10 mV. The waveform appears above the reference line.

Substituting the given values:

$$\text{Instantaneous Voltage} = \frac{5}{\text{divisions}} \times \frac{10\text{ mV}}{\text{divisions}} = 50\text{ mV}$$

$$\text{Instantaneous Voltage} = +50\text{ mV}$$

Dual Trace Phase Difference Measurement

Phase comparison between two signals of the same frequency can be accomplished using the dual-trace feature. This method of phase difference measurement can be used up to the frequency limit of the vertical system. It is also more accurate and easier to use than the X-Y method. To make the comparison, use the following procedure:

1. Set the AC-GND-DC switches to AC.

2. Set the Vertical Mode switch to DUAL TRACE. Position both traces to the graticule horizontal centerline.

3. Connect the reference signal to the Channel 1 input connector and the comparison signal to the Channel 2 input connector. Use coaxial cables or probes which have equal time delay to connect the signals to the input connectors.

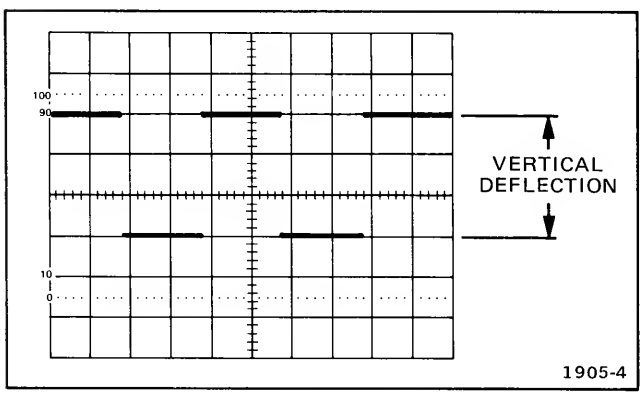

Fig. 2-9. Peak-to-peak voltage measurement.

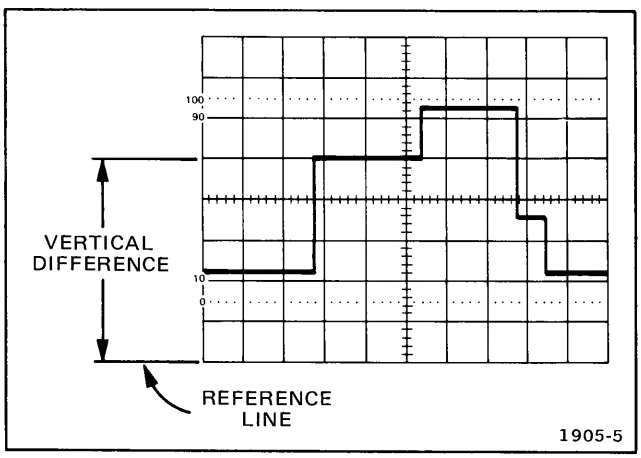

Fig. 2-10. Instantaneous voltage measurement.

4. Set the Channel 1 and Channel 2 VOLT/DIV switches and the Channel 1 and Channel 2 VAR controls so that the displays are equal and about five divisions in amplitude.

5. Set the SEC/DIV switch to a sweep rate which displays about one cycle of the reference waveform.

6. Turn the variable (X1-X10) SEC/DIV control until one cycle of the reference signal (Channel 1) occupies exactly eight divisions between the first and ninth graticule lines (see Fig. 2-11). Each division of the graticule represents 45° of the cycle (360° ÷ 8 divisions = 45°/division).

7. Measure the horizontal difference between corresponding points on the waveforms.

8. Multiply the measured distance (in divisions) by 45°/division (sweep rate) to obtain the exact amount of phase difference.

Example:

Assume a horizontal difference of 0.6 division with a sweep rate of 45°/division as shown in Fig. 2-11.

Substituting the given values:

Phase Difference = 0.6 division X 45°/division

Phase Difference = 27°

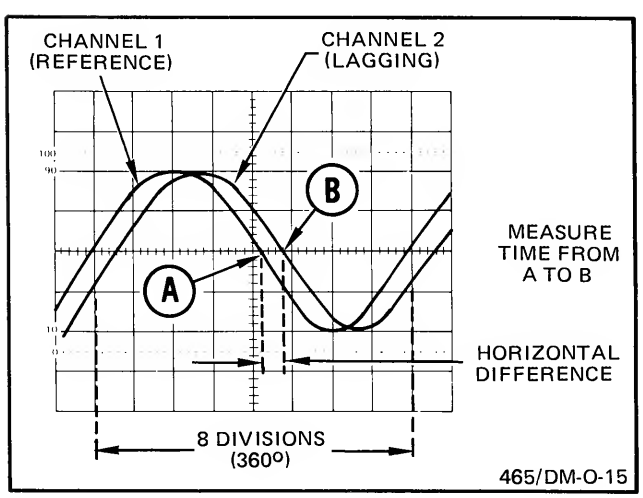

Fig. 2-11. Phase difference.

Time Duration and Frequency Measurements

To find the time duration between two points on a waveform, multiply the horizontal distance (in divisions) between the two points by the SEC/DIV switch setting. Frequency (in hertz) is the reciprocal of the time duration of one cycle (in seconds).

Example:

The horizontal distance measured is 8.3 divisions (see Fig. 2-12).

The SEC/DIV switch is set to 2 ms.

Substituting the given values:

Time Duration = Horizontal distance (divisions) X SEC/DIV setting

Time Duration = 8.3 divisions X 2 ms/division

Time Duration = 16.6 ms (milliseconds)

and

$$\text{Frequency} = \frac{1}{\text{time duration}}$$

$$\text{Frequency} = \frac{1}{16.6\ \text{ms}^{a}} = 60\ \text{Hz}$$

[a]16.6 ms = .0166 second.

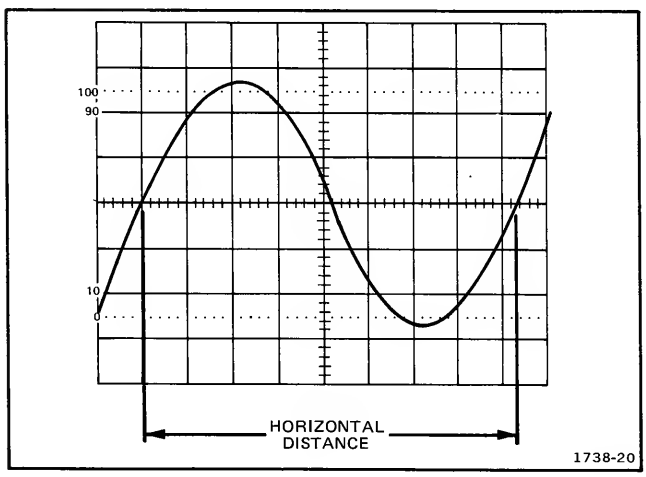

Fig. 2-12. Time duration.

Risetime Measurements

Risetime measurements are made in the same manner as time duration measurements, except the measurements are made between the 10% and 90% points of the waveform's amplitude (see percentage markings on the left edge of the graticule).

Use the following procedure to measure risetime:

1. Adjust the VOLTS/DIV and VAR controls for a display amplitude of exactly five divisions.

2. Adjust the vertical POSITION control so that the display bottom just touches the 0% graticule line and the display top just touches the 100% graticule line (see Fig. 2-13).

3. Measure the horizontal distance (divisions) between the 10% and 90% points on the waveform (point A to point B, Fig. 2-13).

4. Use the following formula to find risetime:

$$\text{Risetime} = \begin{matrix}\text{horizontal}\\ \text{distance}\\ \text{(divisions)}\end{matrix} \times \begin{matrix}\text{SEC/DIV}\\ \text{setting}\end{matrix}$$

Examples:

The horizontal distance between the 10% and 90% point on the waveform is five divisions with a SEC/DIV switch setting of 1 μs.

Substituting the given values:

Risetime = 5 divisions X 1 μs/division

Risetime = 5 μs

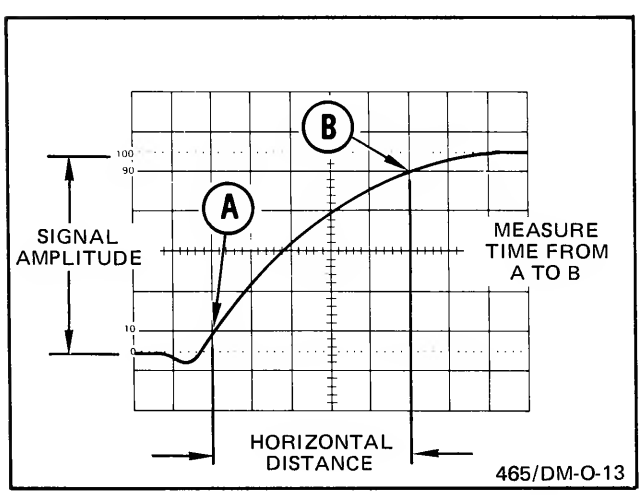

Fig. 2-13. Risetime.

A Intensified Differential Time Measurements

1. Set the A SEC/DIV switch and the horizontal POSITION control to locate both time measurement points within the graticule area (see Fig. 2-14).

2. Set the DISPLAY MODE switch to A INTEN BY B.

3. Unlock the B SEC/DIV switch and rotate clockwise to obtain the shortest usable intensified zone.

4. Use the DELAY TIME POSITION (DTP) control to move the left edge of the intensified zone to just touch the first time measurement point (see Fig. 2-14, point A). Note the number of divisions between the start of the sweep and the start of the intensified zone.

5. Use the DTP control to move the left edge of the intensified zone to just touch the second time measurement point (see Fig. 2-14, point B). Note the number of divisions between the start of the sweep and the start of the intensified zone. Also note the number of divisions between point A and point B.

6. To find the Time Difference, multiply the number of divisions between point A and point B by the A SEC/DIV switch setting.

Example:

The A SEC/DIV switch was set to 2 ms and the B SEC/DIV switch was set to 0.1 ms. Point A is 8.4 divisions from point B. So the time difference is 8.4 x 2 ms = 16.8 ms.

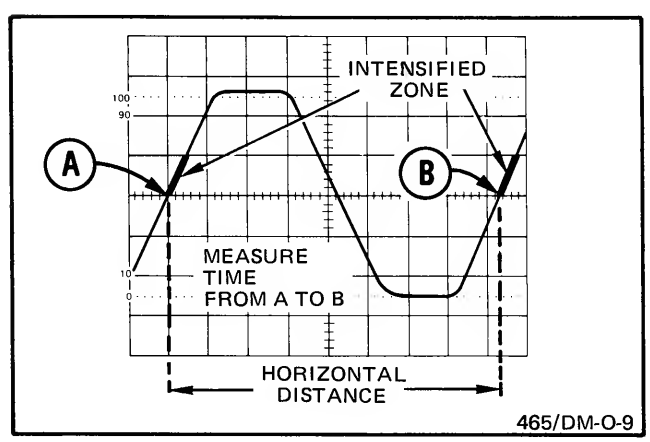

Fig. 2-14. Time duration between points on a waveform.

Delayed Sweep Magnification

The B Delayed mode can provide higher apparent sweep rate magnification than that provided by the X1-X10 control.

Magnified Sweep Starts After Delay. To determine the apparent magnification factor, proceed as follows:

1. Set the DISPLAY MODE switch to A INTEN BY B.

2. With the DELAY TIME POSITION control, move the left edge of the intensified zone to the left side of the portion of the A sweep display to be magnified.

3. Set the B SEC/DIV switch so just the portion of the A sweep display to be magnified is intensified (see Fig. 2-15A).

4. Set the DISPLAY MODE switch to B. The portion of the A sweep display that was intensified in step 3 is now displayed in magnified form (see Fig. 2-15B). The displayed sweep rate is determined by the B SEC/DIV switch. To calculate the apparent magnification factor, use the formula:

$$\text{Apparent Magnification} = \frac{\text{A SEC/DIV switch setting}}{\text{B SEC/DIV switch setting}}$$

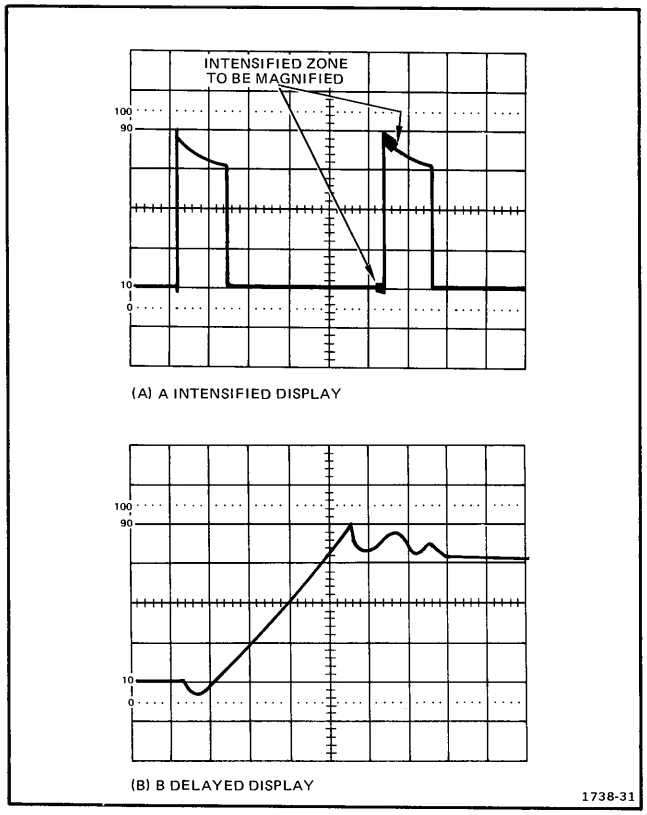

Fig. 2-15. Delayed sweep magnification.

PERFORMANCE CHECK

This procedure allows the basic performance specifications to be checked without removing the instrument covers. It is intended for use in incoming inspection to determine acceptability of newly purchased or recently calibrated instruments.

LIMITS AND TOLERANCES

Tolerances given are for the instrument under test and do not include test equipment error. Limits and tolerances in this check, are instrument specifications only if they are called out as performance requirements in the Specifications section.

TEST EQUIPMENT REQUIRED

You will need the test equipment listed in Table 3-1, or equivalent, to perform a complete Performance Check of the T932 or T935. The Specifications given for the equipment are the minimum necessary for accurate results.

TABLE 3-1

Test Equipment

Description	Minimum Specifications	Usage	Examples of Applicable Test Equipment
1. Amplitude Calibrator	Amplitude accuracy, within 0.5%; signal amplitude, 10 mV to 10 V; output signal, 1 kHz square wave.	Vertical Gain checks, X gain check.	a. Tektronix PG 506 Calibration Generator.[a] b. Tektronix 067-0502-01 Calibration Fixture.
2. Sine-Wave Generator	Frequency, 50 kHz to above 35 MHz; output amplitude, variable from 0.5 to 5 V p-p; output impedance, 50 Ω; reference frequency, 50 kHz; amplitude accuracy, constant within 3% of reference frequency as output frequency changes.	Vertical Amplifier bandwidth checks, X bandwidth check. Triggering checks. Z axis input check.	a. Tektronix SG 503 Leveled Sine-Wave Generator[a] (with included precision cable). b. Tektronix Type 191 Constant Amplitude Signal Generator.
3. Time-Mark Generator	Marker outputs, 10 ns to 0.5 s; marker accuracy within 0.5%; trigger output, 1 ms to 0.1 μs, time coincident with markers.	Timing checks.	a. Tektronix TG 501 Time-Mark Generator.[a] b. Tektronix 2901 Time-Mark Generator.
4. Termination	Impedance, 50 Ω; bnc connectors.	Signal termination.	a. Tektronix Part 011-0049-01.
5. Cable (3)	50 Ω impedance; bnc connectors.	Signal interconnection.	a. Tektronix Part 012-0057-01.
6. Dual Input Coupler	Connectors, bnc female to 2 bnc male.	Signal interconnection.	a. Tektronix Part 067-0525-01.

[a]Requires a TM 500 Series Power Module.

TABLE 3-1 (cont)

Description	Minimum Specifications	Usage	Examples of Applicable Test Equipment
7. T Connector	Connectors, bnc.	Signal interconnection.	a. Tektronix Part 103-0030-00.
8. Adapter	Bnc female to bnc female.	Signal interconnection.	a. Tektronix Part 103-0028-00.
9. TV Source	Composite Sync, output at least 100 mV (or Composite video, output at least 230 mV).	TV SYNC trigger.	a. Any video source with the specified output, including a TV set.

PRELIMINARY PROCEDURE

Use the following steps to put your instrument into a basic operating mode before proceeding with the Performance Check. This procedure is the same for both the T932 and the T935, except where noted.

1. Check that the Power Input Voltage Selector switch and the HI/LO Range Selector switch on the bottom of the cabinet are set for your power input voltage. In the United States, the Power Input Voltage Selector switch is normally set for 120 V and the HI/LO Range Selector switch is normally set for HI at the factory. In Europe, the Power Input Voltage Selector switch is normally set for 240 V and the HI/LO Range Selector switch is normally set for LO. Only qualified service personnel should change the Power Input Voltage Selector switch to a different voltage range setting.

2. If the 120 V/240 V and HI/LO switches are properly set, connect the power cord plug to the power source and turn the instrument on. Connect test equipment to an appropriate power source and turn it on. Set the trigger MODE to AUTO, and SOURCE to INT.

NOTE

Allow a 20 minute warmup before starting the Performance Check Procedure. This instrument must have been adjusted at an ambient temperature of +25° C within 5° C to ensure that checks in this procedure will meet the specifications listed in Section 1.

3. Set the controls as follows:

Vertical Amplifier

Vertical Mode	CH 1
POSITION (both)	Midrange
VOLTS/DIV (both)	2 mV[1]
VAR (both)	Detent (cw)
CH 1 AC-GND-DC	DC
CH 2 AC-GND-DC	GND

Time Base

SEC/DIV	.5 ms
X1-X10 (variable)	X1 (unmagnified—fully ccw in detent)
SOURCE	INT
MODE	AUTO
POSITION	Midrange
SLOPE	+OUT
LEVEL	Midrange
HOLD-OFF	Fully ccw
DELAY TIME POSITION	Fully ccw
DISPLAY MODE	A

4. The POWER ON light should be on and a baseline trace should be visible on the graticule. Adjust INTENSITY, FOCUS, and ASTIG controls for low intensity, well-defined trace.

The baseline should be parallel with horizontal graticule lines. If not, adjust R472, TR ROT (trace rotation), in the left side panel until the trace aligns with the horizontal graticule lines.

This ends the preliminary procedure.

[1]**Unless otherwise stated, use the 1X PROBE window for VOLTS/DIV settings throughout the Performance Check Procedure.**

PERFORMANCE CHECK PROCEDURE

1. CH 1 and CH 2 Deflection Accuracy

a. Connect test equipment as shown in Fig. 3-1 (use appropriate POSITION control as needed to center the display within the graticule area).

b. CHECK—Deflection accuracy for CH 1 according to Table 3-2 within 3% (+20° C to +30° C).

TABLE 3-2

Deflection Accuracy

VOLTS/DIV (1X PROBE WINDOW)	Amplitude Calibrator Output	Vertical Deflection (divisions)	±3% Tolerance (divisions)
2 mV	10 mV	5	4.85 to 5.15
5 mV	20 mV	4	3.88 to 4.12
10 mV	50 mV	5	4.85 to 5.15
20 mV	.1 V	5	4.85 to 5.15
.2 V	1 V	5	4.85 to 5.15
2 V	10 V	5	4.85 to 5.15

c. Set:

CH 1 AC-GND-DC	GND
CH 2 AC-GND-DC	DC
Vertical Mode	CH 2
CH 2 POSITION	As needed

d. CHECK—Deflection accuracy for CH 2 according to Table 3-2 within 3% (+20° C to +30° C).

e. Set amplitude calibrator to 0.1 volt.

2. CH 1 and CH 2 VAR (Variable) Volts/Div Range

a. Set CH 1 and CH 2 VOLTS/DIV to 20 mV.

b. CHECK—Display amplitude reduces from five divisions to less than two divisions with CH 2 VAR control turned fully counterclockwise.

c. Set:

Vertical Mode	CH 1
CH 1 AC-GND-DC	DC
CH 2 AC-GND-DC	GND

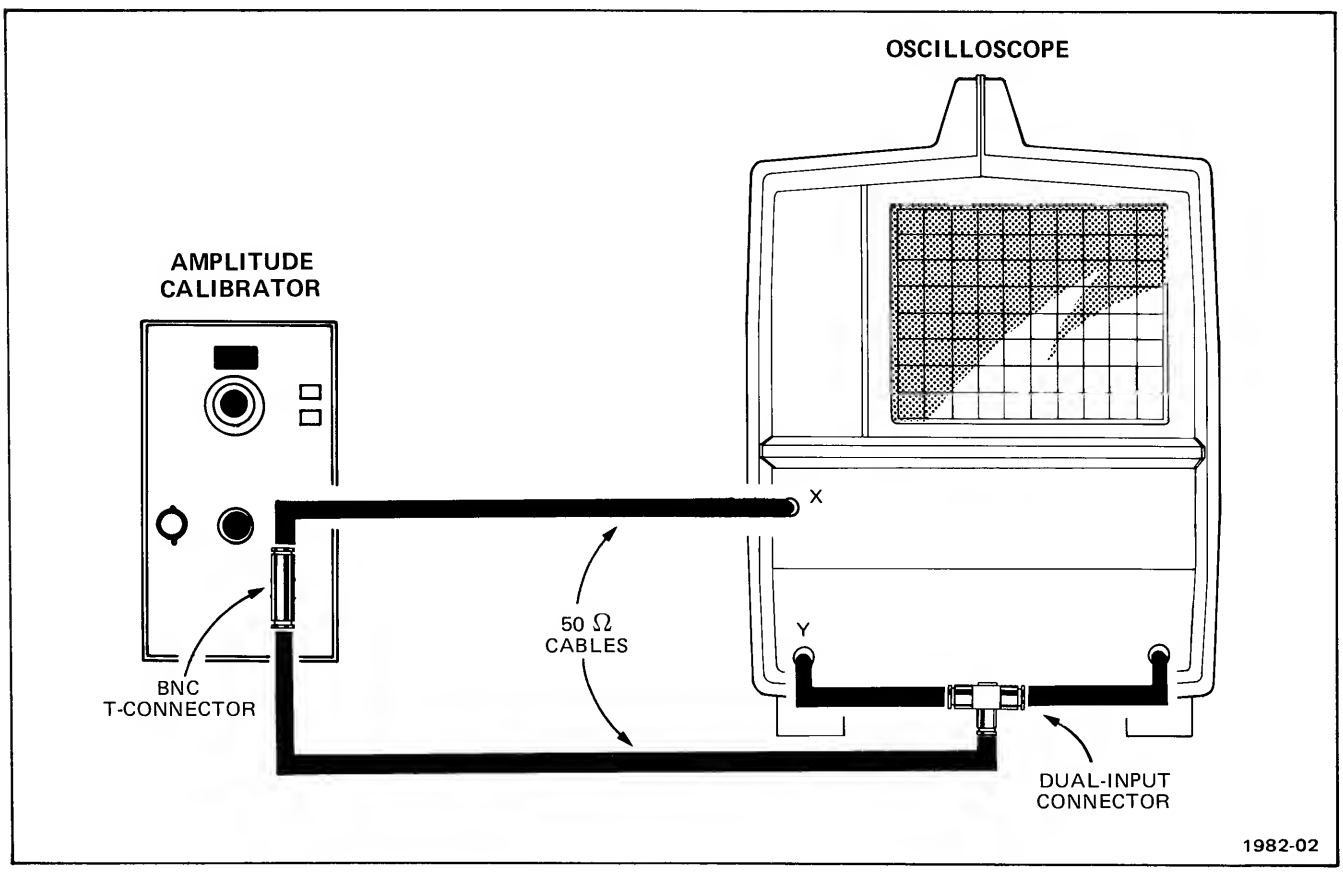

Fig. 3-1. Deflection accuracy check test setup.

d. CHECK—Display amplitude reduces from 5 divisions to less than 2 divisions with CH 1 VAR control turned fully counterclockwise.

e. Return both VAR controls to detent position.

f. Disconnect test equipment.

3. Channel 1 Bandwidth

a. Connect test equipment as shown in Fig. 3-2.

b. Set:

VOLTS/DIV (both)	2 mV
AC-GND-DC (both)	DC
LEVEL	Fully cw
POSITION (all)	As required

c. Set generator frequency to 50 kHz (reference) and adjust output amplitude for a 5 division display.

d. Set generator frequency to 35 MHz.

e. CHECK—Display amplitude is at least 3.5 divisions.

4. Channel 2 Bandwidth

a. Set: Vertical Mode CH 2

b. Move the sine-wave generator output (through 50 Ω cable and 50 Ω termination) from CH 1 input connector to CH 2 input connector.

c. Set generator frequency to 50 kHz (reference) and adjust output amplitude for a 5 division display.

d. Set generator frequency to 35 MHz.

e. CHECK—Display amplitude is at least 3.5 divisions.

f. Disconnect test equipment.

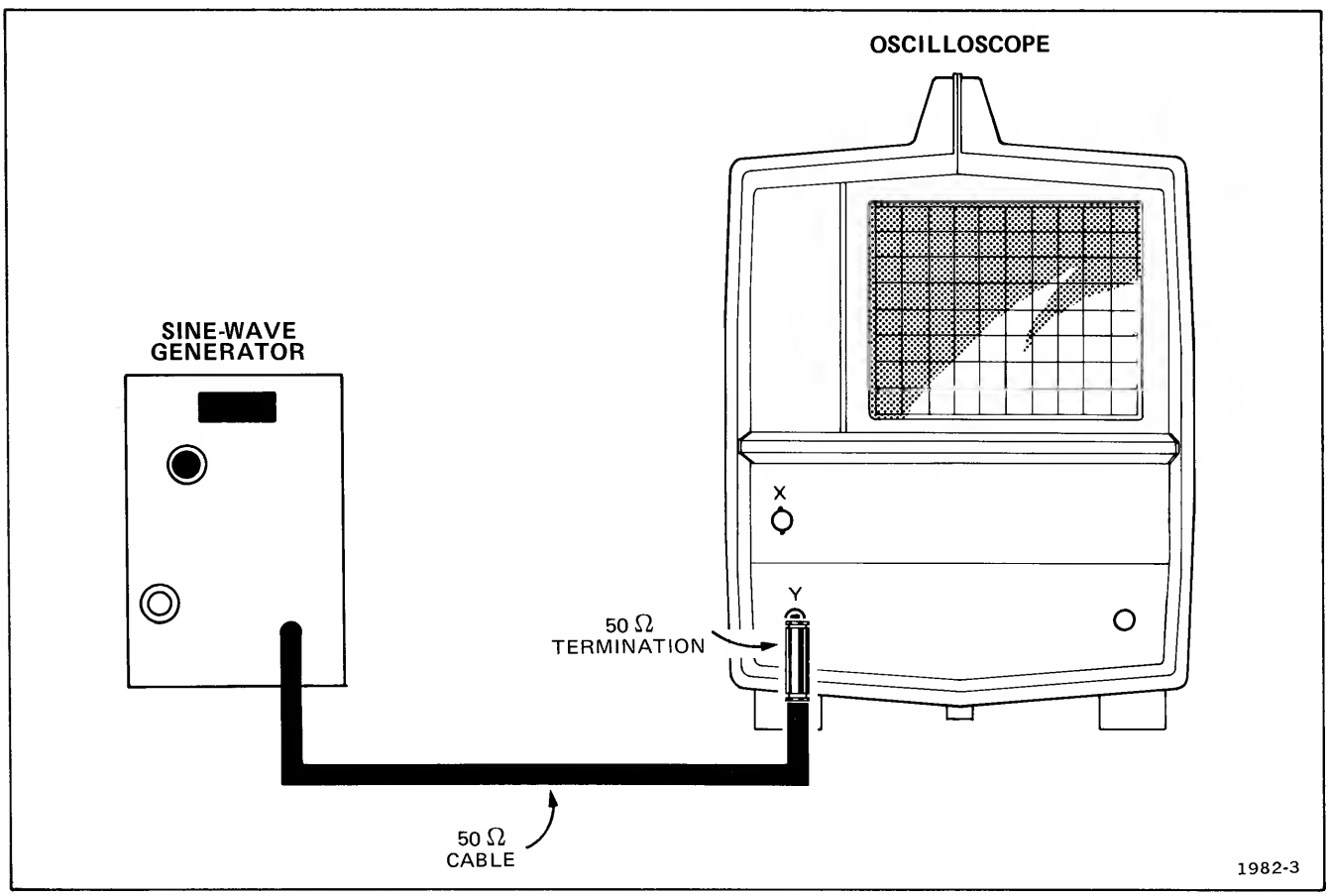

Fig. 3-2. Bandwidth check test setup.

5. X-Axis Gain

a. Set:

Vertical Mode	CH 1
VOLTS/DIV (CH 1)	.1 V
SOURCE	X-Y
X1-X10	X10 (fully cw)
INTENSITY	For visible display
SEC/DIV	0.1 ms

b. Connect test equpment as shown in Fig. 3-3 and set generator output amplitude to .5 V, and frequency to 50 kHz.

c. CHECK—Horizontal deflection between 3.5 and 6.5 divisions (set horizontal POSITION as needed to view start and end of display).

d. Disconnect test equipment.

6. X-Axis Bandwidth

a. Connect sine-wave generator though 50 Ω cable and 50 Ω termination to X (EXT) input.

b. Set generator frequency to 50 kHz (reference) and adjust output amplitude for 10 divisions (about 1 volt) of horizontal deflection.

c. Set generator frequency to 2 MHz.

d. CHECK—Display amplitude is at least seven divisions.

e. Disconnect test equipment.

f. Set SOURCE to INT; MODE to NORM.

NOTE

When making trigger checks, adjust the LEVEL control, POSITION controls, and INTENSITY as needed for a stable visible display, unless instructed otherwise.

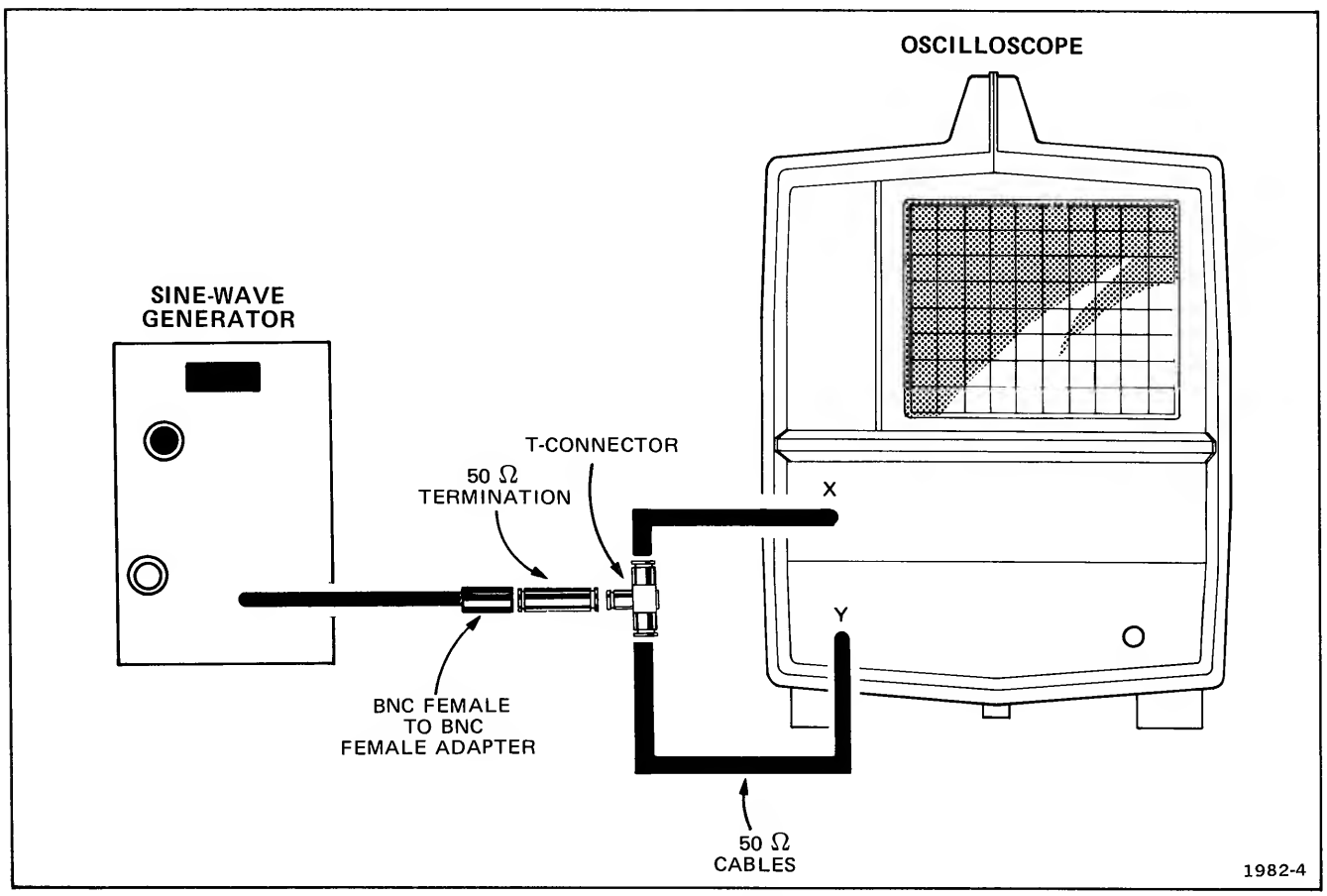

Fig. 3-3. X Gain, Triggering, and Z-axis input check test setup.

7. 2 MHz Internal Triggering

a. Connect test equipment as shown in Fig. 3-3.

b. Set:

CH 1 VOLTS/DIV	1 V
SEC/DIV	.1 μs
X1-X10	X1 (fully ccw detent)

c. Set sine-wave generator frequency for 2 MHz and adjust output amplitude for a 0.5-division display.

d. CHECK—Stable display can be obtained in both the +OUT and −IN positions of the SLOPE switch for both AUTO and NORM.

8. 2 MHz External Triggering

a. Set: CH 1 VOLTS/DIV .1 V

b. Adjust sine-wave generator output amplitude for 100 mV (one division on crt).

c. Set: SOURCE EXT

d. CHECK—Stable display can be obtained in both the +OUT and −IN positions of the SLOPE switch for both AUTO and NORM.

9. 35 MHz Internal Triggering

a. Set:

SOURCE	INT
CH 1 VOLTS/DIV	50 mV
X1-X10 (variable)	X10 (fully cw detent)

b. Set sine-wave generator frequency for 35 MHz and output amplitude for a 3-division display; then set CH 1 VOLTS/DIV to .1 V.

c. CHECK—Stable display can be obtained in both the +OUT and −IN positions of the SLOPE switch for both AUTO and NORM modes.

10. 35 MHz External Triggering

a. Set: SOURCE EXT

b. CHECK—Stable display can be obtained in both the +OUT and −IN positions of the SLOPE switch for both AUTO and NORM.

11. Z-Axis Input

a. Set:

CH 1 VOLTS/DIV	1 V
SEC/DIV	.1 ms
SOURCE	INT
MODE	AUTO
X1-X10 (variable)	X1 (fully ccw detent)

b. Set sine-wave generator frequency to 50 kHz and adjust output amplitude for a 5-division display.

c. Disconnect 50 Ω cable from X (or EXT, external trigger) input, and connect it to EXT Z AXIS connector at rear of instrument.

d. CHECK—Trace modulation is noticeable at normal intensity. (Adjust LEVEL control as required to obtain stable display).

e. Disconnect test setup.

12. Low Frequency Triggering

a. Set:

SEC/DIV	10 ms
VOLTS/DIV (CH 1)	2 mV
CH 1 AC-GND-DC	DC
MODE	NORM

b. Connect 10X probe to CH 1 input.

c. Lay probe near ac line voltage source and adjust CH 1 VOLTS/DIV switch and VAR control for a 0.4-division display.

d. CHECK—Stable display can be obtained in both the +OUT and −IN positions of the SLOPE switch for AUTO and NORM modes, and LINE and INT SOURCE positions.

e. Remove probe.

f. Return VAR to detent; MODE to NORM; and SOURCE to INT.

13. A and B Sweep Rate Accuracy

NOTE

For T932, use the procedure for the A sweep only.

a. Connect test setup as shown in Fig. 3-4.

b. Set:

CH 1 VOLTS/DIV	.2 V
SOURCE	INT
MODE	NORM
X1-X10	X1 (fully ccw)
SLOPE	As needed
LEVEL	As needed
POSITION (all)	As needed

c. CHECK—A sweep SEC/DIV accuracy according to Table 3-3; one or two time marks, as indicated, within 3% (0.24 div) over center eight divisions. Accuracy specifications apply for a temperature range of +20° C to +30° C.

d. Set: DISPLAY MODE B

e. CHECK—B sweep accuracy according to Table 3-3. Display one or two time marks as indicated within 3% (within 0.24 div) over the center 8 divisions (+20° C to +30° C).

TABLE 3-3

A and B Sweep Timing Accuracy

SEC/DIV Setting	Time-Mark Generator Output	CRT Display (Markers/Divisions)
.1 μs	0.1 microsecond	1[a]
.2 μs	0.1 microsecond	2
.5 μs	0.5 microsecond	1
1 μs	1 microsecond	1
2 μs	1 microsecond	2
5 μs	5 microseconds	1
10 μs	10 microseconds	1
20 μs	10 microseconds	2
50 μs	50 microseconds	1
.1 ms	0.1 millisecond	1
.2 ms	0.1 millisecond	2
.5 ms	0.5 millisecond	1
1 ms	1 millisecond	1
2 ms	1 millisecond	2
5 ms	5 milliseconds	1
10 ms	10 milliseconds	1
20 ms	10 milliseconds	2
50 ms	50 milliseconds	1
A Sweep Only		
.1 s	0.1 s	1
.2 s	0.1 s	2
.5 s	0.5 s	1

[a]Exclude the first .5 div (50 ns) at this sweep speed.

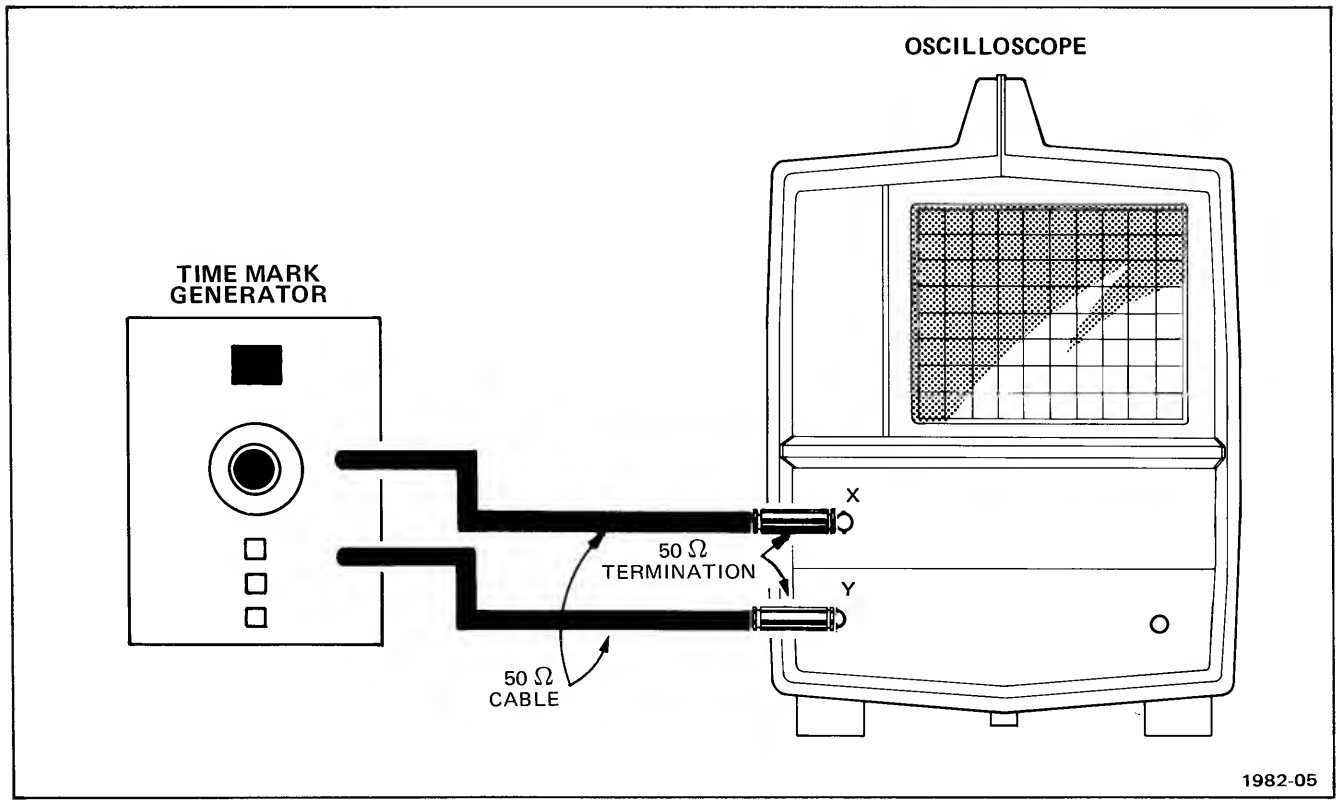

Fig. 3-4. Timing accuracy and delay time check test setup.

14. MAGNIFIED SWEEP ACCURACY

a. Set:

X1-X10	X10 (fully cw)
SEC/DIV	0.1 μs
DISPLAY MODE	A
SOURCE	INT (see note)

b. Set time-mark generator to 10 ns (adjust CH 1 VOLTS/DIV as necessary for a visible display).

NOTE

If you cannot obtain a stable display, connect the time-mark generator trigger output to the X or EXT (external trigger) connector via a 50 Ω cable and 50 Ω termination. Set MODE to EXT and adjust LEVEL control for a stable display.

c. CHECK—Magnified sweep accuracy according to Table 3-4: One or two time marks as indicated, within 5% (0.4 div) over center 8 divisions. Exclude the first 50 ns after the start of the sweep (5 divisions for the 0.1 μs setting; 2.5 divisions for the 0.2 μs setting; one division for 0.5 μs and 1 μs settings), and anything beyond the 100th magnified division. Accuracy specifications apply for a temperature range of +20° C to +30° C.

d. Set: DISPLAY MODE B

e. Repeat part c.

f. Return X1-X10 control to X1 (fully counterclockwise).

TABLE 3-4

Magnified Sweep Timing Accuracy

SEC/DIV Setting	Time-Mark Generator Output	CRT Display (Markers/Division)
.1 μs	10 nanosecond	1
.2 μs	10 nanosecond	2
.5 μs	50 nanosecond	1
1 μs	.1 microsecond	1
.5 ms	50 microsecond	1

15. Delay Time Position (T935 only)

a. Set:

A SEC/DIV	.5 ms
B SEC/DIV (pull out to separate)	5 μs
VOLTS/DIV	.5 V
DISPLAY MODE	A INTEN BY B
SOURCE	INT
X1-X10	X1 (fully ccw)

b. Adjust the time-mark generator for .5 ms.

c. Move the trace horizontally so you can see the start of the sweep at the left edge of the graticule.

d. CHECK—With the DELAY TIME POSITION control fully counterclockwsie, the intensified portion of the sweep should be less than 0.5 div from the start of the sweep. With the DELAY TIME POSITION control fully clockwise, the dot should be at least 10 div from the start of the sweep (to the right of the graticule area).

16. Delay Time Jitter (T935 only)

a. Position the start of the intensified portion of the sweep on the tenth time marker.

b. Set:

MODE	AUTO
DISPLAY MODE	B

c. Adjust the Horizonal POSITION control so the display is in the center of the screen.

d. Set: INTENSITY — For well-defined display

e. CHECK—Horizontal jitter is 1 division or less.

f. Disconnect test equipment.

17. TV TRIGGER

NOTE

We recommend that you only check the TV Trigger if you are going to be using it. Any TV signal source will do for the check—such as a TV set.

The amplitude settings given in this procedure are to check both the INT and EXT trigger requirements. You can check just the INT trigger by using the VOLTS/DIV settings to attenuate the signal to 1 div of composite sync or 2.3 div of composite video.

a. Connect test setup as shown in Fig. 3-5.

b. Set: SEC/DIV .1 ms
CH 1 VOLTS/DIV .1 V
MODE TV

c. Set signal source for 1 division of composite sync (or about 2.3 divisions of composite video).

d. Adjust LEVEL and SLOPE as needed to trigger display.

e. CHECK—Stable display is present (display triggers on TV field).

f. Set: SEC/DIV 50 μs

g. CHECK—Stable display is present (display triggers on TV line).

h. Set: SOURCE EXT

i. Adjust LEVEL and SLOPE as needed to trigger display.

j. CHECK—Stable display is present (display triggers on TV line).

k. Set: SEC/DIV .1 ms

l. CHECK—Stable display is present (display triggers on TV field).

m. Disconnect test setup.

END OF PROCEDURE

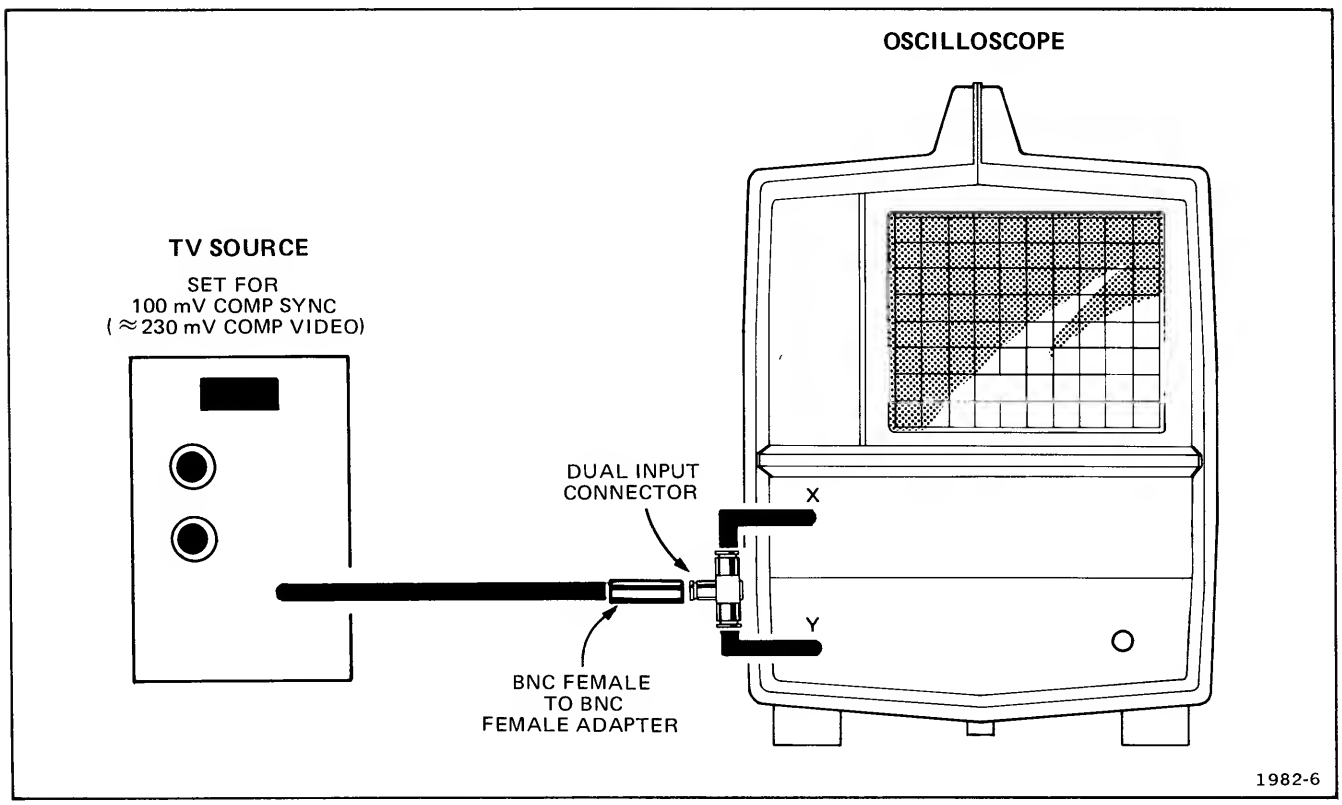

Fig. 3-5. TV trigger check test setup.

ADJUSTMENTS

WARNING

SERVICING INFORMATION IN THE FOLLOWING SECTIONS IS INTENDED FOR USE BY QUALIFIED SERVICE PERSONNEL ONLY. TO AVOID ELECTRIC SHOCK, DO NOT REMOVE INSTRUMENT COVERS OR PERFORM ANY SERVICING UNLESS QUALIFIED TO DO SO.

IMPORTANT—PLEASE READ BEFORE USING THIS PROCEDURE

When done properly, this procedure allows you to adjust the instrument to its original performance specifications. The Adjustment Procedure is not intended as a troubleshooting guide. Any trouble you find during the procedure should be corrected before continuing. Refer to the Service Information section for further information.

LIMITS AND TOLERANCES

Limits and tolerances are instrument specifications only if they are called out as performance requirements in the Specification section. Tolerances given are for the oscilloscope under test and do not include test equipment error.

ADJUSTMENT INTERACTION

Some adjustments interact with others. These are identified with an INTERACTION step.

PARTIAL PROCEDURES

You can perform part of the adjustment procedure after replacing components or just to touch up the performance between major re-adjustments. Do not change the setting of the −8 V supply unless you intend to re-adjust the entire instrument.

To adjust only part of the instrument, set the controls according to the nearest preceding Control Settings and use the test setup given in the step you intend to perform or the setup in a preceding step. To prevent unnecessary re-adjustment only if the tolerance given for that step is not met. If it is necessary to reset an adjustment, also check any steps listed in the INTERACTION—part of the step.

TEST EQUIPMENT REQUIRED

The test equipment listed in Table 4-1, or equivalent is required for complete calibration of the oscilloscope. Specifications given for the equipment are the minimum necessary for accurate calibration.

TABLE 4-1

Test Equipment

Description	Minimum Specifications	Usage	Examples of Applicable Test Equipment
1. Digital Voltmeter	Range, 0 to 9 V dc; accuracy within 0.3%.	Power supply adjustment.	a. Tektronix DM 501 Digital Multimeter.[a]
2. Time-Mark Generator	Markers, 0.5 μs to 0.5 s; accuracy, within 0.3%.	Y-axis alignment, geometry adjustment, sweep and timing adjustments.	a. Tektronix TG 501 Time-Mark Generator.[a] b. Tektronix 2901 Time-Mark Generator.
3. Amplitude Calibrator	Signal Amplitude, 10 mV to 50 V square wave; frequency, 1 kHz; amplitude accuracy, within 0.3%.	Vertical gain adjustment.	a. Tektronix PG 506 Calibration Generator.[a]
4. Square-Wave Generator	Frequency, 1 kHz and 100 kHz; risetime, 2 ns or less.	High frequency compensation and vertical attenuator adjustments.	a. Tektronix PG 506 Calibration Generator.[a] b. Tektronix Type 106 Square-Wave Generator.
5. Cable	Length, 42 in.; impedance, 50 Ω; connectors, bnc.	Signal interconnection.	a. Tektronix Part 012-0057-01.
6. Termination	Impedance, 50 Ω; connectors bnc.	Signal termination.	a. Tektronix Part 011-0049-01.
7. Low-Capacitance Alignment Tool		Variable capacitor adjustments. Vertical attenuator and high-frequency compensation adjustment.	a. General Cement adjustment tool G.C. 8722.
8. Screwdriver	Length, 3 in. shaft; bit size, 3/32 in.	Variable resistor adjustments.	a. Xcelite R-3323.
9. 10X Attenuator	Ratio, 10X; impedance, 50 Ω; connectors, bnc.	Vertical attenuator adjustments.	a. Tektronix Part 011-0059-02.
10. Probe, 10X	Attenuation, 10X; Probe can be compensated for input characteristics of T932/T935.	Vertical attenuator compensation.	a. P6108, Tektronix Part 010-6108-03 (Standard accessory for T932 and T935.)
11. Adapter	Probe-tip-to-bnc.	Vertical attenuator. compensation.	a. Tektronix Part 013-0084-02.

[a]**Requires TM 500 Series Power Module**

PRELIMINARY PROCEDURE

WARNING

Dangerous potentials exist at several points inside your instrument. To prevent electrical shock, do not touch exposed connections or components when the instrument is operated with the cover removed. Disconnect power cord plug from power input voltage source while disassembling or repairing this instrument.

1. Remove the cabinet from the instrument. To remove the cabinet, remove the six retaining screws (three on the top and three on the bottom) and slide the halves apart.

2. Check the 120 V/240 V range selector switch, S701, and the High/Low selector switch, S705, for correct settings. Both switches are located on the bottom of the instrument. If you change the setting of the range selector switch, change the line fuse. Refer to the Replaceable Electrical Parts list for correct fuse values.

3. Connect the T932 or T935 and test equipment to an appropriate power input source. Turn them on and allow at least 20 minutes warmup before starting the adjustment procedure.

For best overall accuracy, make adjustments at an ambient temperature of +20° C to +30° C.

A. DISPLAY AND POWER SUPPLY

Equipment Required

1. Digital Voltmeter
2. Time-Mark Generator
3. 50 Ω BNC Cable
4. 50 Ω Termination
5. Screwdriver
6. Low-Capacitance Alignment Tool

PRELIMINARY CONTROL SETTINGS

Preset front panel controls as follows:

NOTE

Do not preset internal controls.

INTENSITY	Midrange
Vertical Mode	CH 1
CH 1 VOLTS/DIV	1 V (1X)[1]
VOLTS/DIV VAR (both)	Detent (cw)
AC-GND-DC (both)	GND
A & B SEC/DIV	.1 ms
X1-X10	X1 (fully ccw)
SOURCE	INT
MODE	AUTO
SLOPE	+OUT
LEVEL	Midrange
CH 1 POSITION	Midrange
Horizontal POSITION	Midrange
HOLD-OFF	Fully ccw
DISPLAY mode	A

Set all other controls as desired. The oscilloscope should produce a baseline trace with the controls set as above. Adjust the INTENSITY and FOCUS controls (on front panel), and ASTIG control (left side of cabinet) as needed to maintain a well-defined display.

1. −8 V Power Supply

NOTE

Do not change the setting of the −8 V adjustment unless you intend to re-adjust the entire instrument.

a. Connect digital voltmeter between the −8 V side of R775 and ground (see Fig. 4-1). If meter does not read between −7.96 V and −8.04 V, proceed to part b.

b. ADJUST—R773, −8 V Adj (see Fig. 4-1) for −8.00 V dc.

c. Disconnect digital voltmeter.

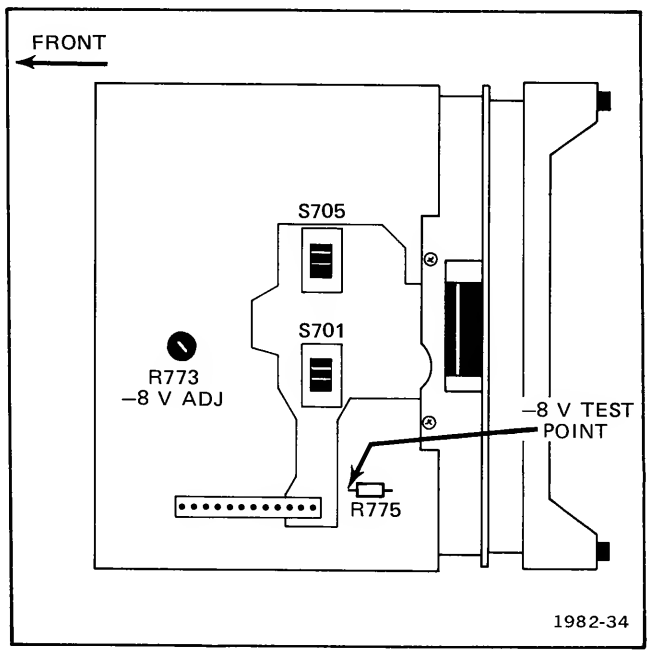

Fig. 4-1. Power supply adjustment locations (on bottom of chassis).

[1]**Refers to window on VOLTS/DIV switch knob. Use 1X probe window unless otherwise specified in individual steps of the procedure.**

2. Trace Rotation

a. Position trace vertically to the center horizontal graticule line.

b. ADJUST—Trace Rot, R472 (see Fig. 4-2), to align trace with center horizontal graticule line.

3. Y-Axis Alignment

a. Set CH 1 AC-GND-DC to DC.

b. Connect .1 ms markers from time-mark generator to CH 1 input via 50 Ω BNC termination and 50 Ω BNC cable.

c. Set CH 1 VOLTS/DIV and VAR to obtain slightly more than 8 divisions of vertical deflection and position display baseline below bottom graticule line (off screen).

d. Set SEC/DIV to obtain about one marker/division and rotate horizontal POSITION to align a marker with center graticule line.

e. ADJUST—Y-axis, R474, (see Fig. 4-2) to align center marker with center vertical graticule line.

f. INTERACTION—Position display baseline to center horizontal graticule line and check that baseline aligns with horizontal graticule line. If not, re-adjust trace rotation. Then re-check Y-Axis alignment.

4. Geometry

a. Move display baseline slightly below bottom graticule line.

b. ADJUST—Geom, R473 (see Fig. 4-2) for best alignment of markers with the vertical graticule lines, i.e.: minimum bowing of markers.

c. INTERACTION—Between Geom and Y-Axis. Repeat both adjustments for best alignment of markers with vertical graticule lines.

d. Disconnect time-mark generator.

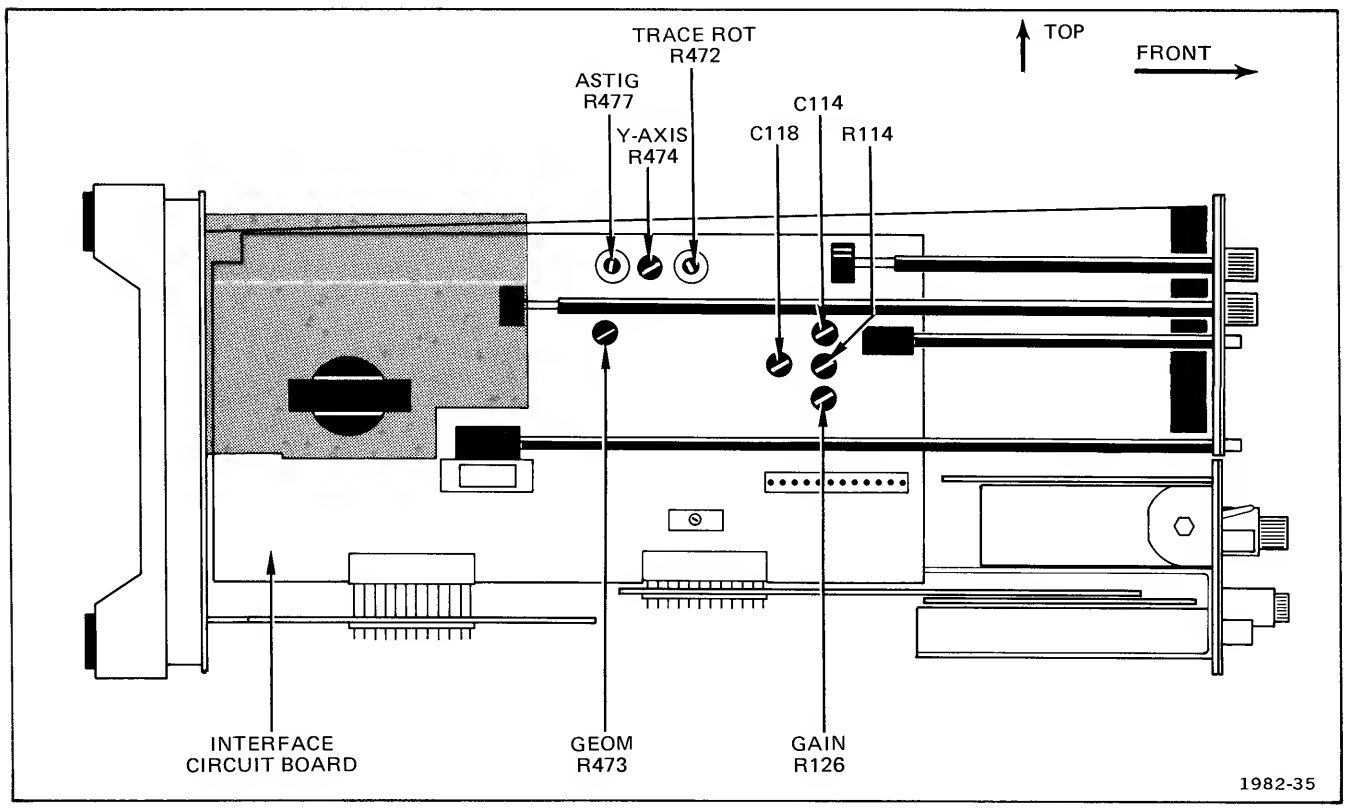

Fig. 4-2. Interface board adjustment locations (on left side of crt).

B. VERTICAL AMPLIFIER

Equipment Required

1. Digital Voltmeter
2. Amplitude Calibrator
3. Square-Wave Generator
4. 50 Ω BNC Termination
5. 50 Ω BNC Cable
6. Low Capacitance Alignment Tool
7. Screwdriver
8. 10X Probe
9. 10X Attenuator
10. Probe-tip-to-BNC Adapter
11. Dual Input Coupler (optional)

PRELIMINARY CONTROL SETTINGS

Preset front panel controls as follows:

INTENSITY	Midrange (for visible trace)
HOLD-OFF	Fully ccw
FOCUS	Midrange
Vertical Mode	CH 1
VOLTS/DIV (both)	2 mV (1X)[1]
AC-GND-DC (both)	GND
VAR (both)	Detent (cw)
A SEC/DIV	.5 ms
X1-X10	X1 (fully ccw detent)
SOURCE	INT
MODE	AUTO
SLOPE	+OUT
LEVEL	Midrange
POSITION (all)	Midrange
DISPLAY MODE	A

Set all other controls as desired.

The oscilloscope should produce a baseline trace with the controls set as above. Adjust INTENSITY and FOCUS controls as needed to maintain a well-defined display while making adjustments.

PROCEDURE

1. Vertical Preamplifier Balance

a. ADJUST—CH 1 DC BAL, R4130 (see Fig. 4-3), for no trace shift while switching CH 1 VOLTS/DIV control between 2 mV and 10 mV.

b. Set: Vertical Mode CH 2

c. ADJUST—CH 2 DC BAL, R4232 (see Fig. 4-3), for no trace shift while switching CH 2 VOLTS/DIV control between 2 mV and 10 V.

2. Vertical Output Amplfier Gain

NOTE

You should not have to re-adjust the vertical output gain unless you have replaced the crt or other components, or adjustments have accidentally been altered.

a. Set VOLTS/DIV (both) to 5 mV/div and Vertical Mode to CH 1.

b. Set Gain, R126 (see Fig. 4-2), to physical midrange.

c. Connect digital voltmeter between P4-9 and P4-11 (see Fig. 4-3). Select range on meter for at least 500 mV reading.

d. Set vertical POSITION control so trace is aligned with center horizontal graticule line. Note meter reading.

e. Rotate vertical POSITION control until meter reading has changed 150 mV positive from reading in part d (trace moved toward top of screen).

f. Adjust Gain, R126 (see Fig. 4-2), so trace aligns with third graticule line above center horizontal graticule line.

g. Disconnect digital voltmeter.

[1]**Refers to window on VOLTS/DIV switch knob. Use 1X probe window unless otherwise specified in individual steps of the procedure.**

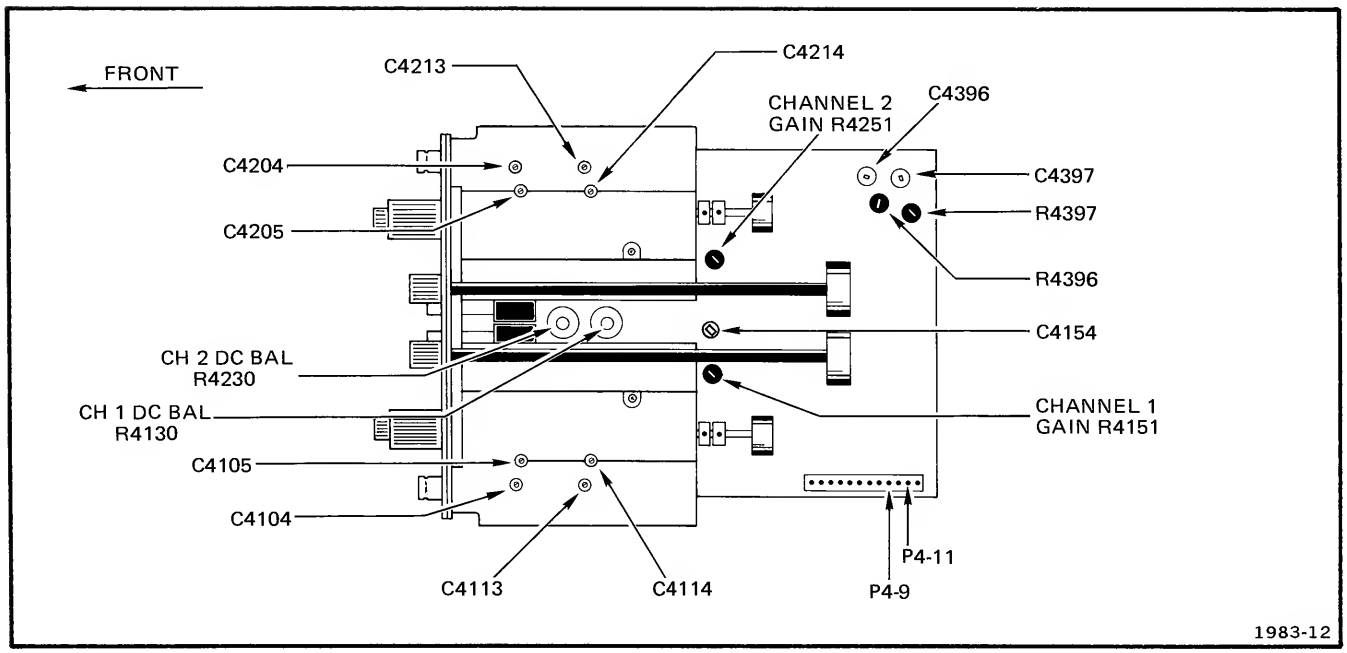

Fig. 4-3. Vertical Amplifier adjustment locations (bottom view of instrument).

3. Vertical Preamplifier Gain

a. Set: VOLTS/DIV (both) 5 mV[1]
AC-GND-DC (both) DC
Vertical Mode CH 1

b. Connect a 1 kHz, 20 mV amplitude calibrator (standard output) signal to CH 1 input via a 50 Ω unterminated cable. Set CH 1 POSITION to center the display vertically.

c. ADJUST—Gain, R4151 (see Fig. 4-3), for a 4-division display.

d. Move 20 mV amplitude calibrator signal to CH 2 input and set Vertical Mode to CH 2. Set CH 2 POSITION to center the display vertically.

e. ADJUST—Gain, R4351 (see Fig. 4-3), for 4-division display.

f. INTERACTION—If you cannot adjust CH 1 and CH 2 Preamplifier Gain for 4-division display, repeat steps 2 and 3.

g. Disconnect test equipment.

NOTE

For convenience in the following steps, set the TIME BASE to 1 ms (SEC/DIV to 1 ms and X1-X10 to X1) while adjusting the generator for a 5-division display. Then set TIME BASE TO 50 μ (SEC/DIV to .5 μ and X1-X10 to X10) when observing or adjusting leading edge detail.

4. High Frequency Compensation

a. Set: VOLTS/DIV (both) 2 mV[1]
Vertical Mode CH 2
AC-GND-DC (both) DC
A SEC/DIV 1 ms

b. Connect square-wave generator (fast rise, +transition) to Channel 2 input connector via 50 Ω cable, 10X attenuator, and 50 Ω termination.

c. Set square-wave generator for 100 kHz, fast rise, and amplitude for 5-division display. Set SEC/DIV to .5 μs, and INTENSITY as necessary to view the display.

d. Set POSITION and LEVEL controls to position the leading edge of the signal on screen.

e. ADJUST—C4397, R4397, C4396, R4396 (see Fig. 4-3), C114, R114, C118 (see Fig. 4-2), for best front corner of waveform using a low-capacitance alignment tool.

[1]Refers to window on VOLTS/DIV switch knob. Use 1X probe window unless otherwise specified in individual steps of procedure.

f. Set: Vertical Mode CH 1

g. Connect square-wave generator to Channel 1 input connector via 50 Ω cable, 10X attenuator, and 50 Ω termination.

h. ADJUST—C4154 (see Fig. 4-3), for best square front corner of waveform using low-capacitance alignment tool.

i. INTERACTION—If you cannot obtain square front corner, re-adjust C4396, R4396, C4397, R4397, C114, C118, and R114 for best square front corner in both CH 1 and CH 2.

j. Disconnect test equipment.

5. Channel 1 Attenuator Compensation

a. Set:

CH 1 VOLTS/DIV	20 mV[1]
CH 1 AC-GND-DC	DC
Vertical Mode	CH 1
A SEC/DIV	1 ms
X1-X10	X10 (fully cw)

b. Connect a 50 Ω cable from the high-amplitude output of the square-wave generator, through a 10X attenuator and a 50 Ω termination to the CH 1 input connector. Set generator to 1 kHz and adjust for a 5-division display.

c. ADJUST—C4114 (see Fig. 4-3) for best square front corner (see Fig. 4-4 for example).

d. Remove 10X attenuator and set CH 1 VOLTS/DIV to .2 V. Set generator output for a 5-division display.

e. ADJUST—C4105 (see Fig. 4-3) for best square front corner (see Fig. 4-4 for example). Disconnect test equipment.

f. Set CH 1 VOLTS/DIV to 10 mV and X1-X10 to X1 (fully ccw).

g. Connect a 10X probe to the CH 1 input. Connect the probe tip to a probe tip-to-bnc adapter, the adapter to a 50 Ω bnc termination, and the termination to a 50 Ω bnc 10X attenuator attached to the square-wave generator high-amplitude output connector. Set generator for a 5-division, 1 kHz display.

h. Compensate probe for best front corner of waveform.

i. Set CH 1 VOLTS/DIV to 20 mV and set generator for a 5-divison display (remove 10X attenuator if necessary).

j. ADJUST—C4113 for flat top on square wave.

k. Set CH 1 VOLTS/DIV to .2 V, and square-wave generator output for a 5-division display (remove 10X attenuator, and also 50 Ω termination if necessary).

l. ADJUST—C4104 for a flat top on square wave.

m. Disconnect test equipment.

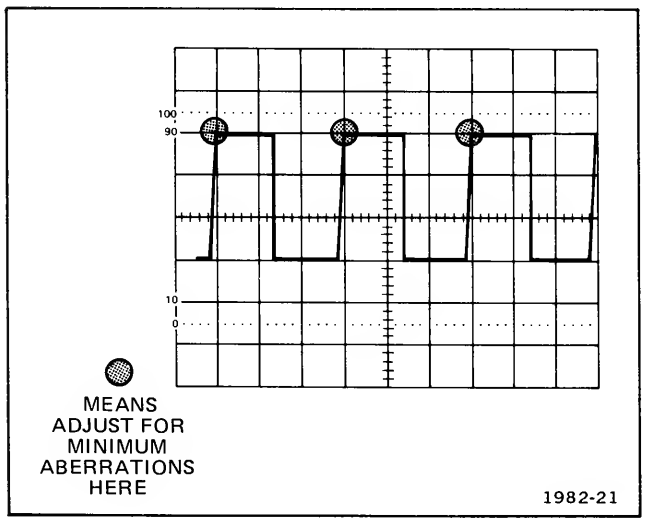

Fig. 4-4. Display of correct attenuator compensation (idealized).

[1]**Refers to window on VOLTS/DIV switch knob. Use 1X probe window unless otherwise specified in individual steps of the procedure.**

6. CH 2 Attenuator Compensation

a. Set:

CH 2 VOLTS/DIV	20 mV[1]
Ch 2 AC-GND-DC	DC
Vertical Mode	CH 2
A SEC/DIV	1 ms
X1-X10	X10 (fully cw)
POSITION (all)	As required

b. Connect a 50 Ω cable from the high-amplitude output of the square-wave generator, through a 10X attenuator, and a 50 Ω termination to the CH 2 input connector. Set generator to 1 kHz and adjust for 5-division display.

c. ADJUST—C4214 (see Fig. 4-3) for best square front corner (see Fig. 4-4 for example).

d. Remove 10X attenuator and set CH 2 VOLTS/DIV to .2 V. Set generator output for a 5-division display.

e. ADJUST—C4205 (see Fig. 4-3) for best square front corner (see Fig. 4-4 for example). Disconnect test equipment.

f. Set CH 2 VOLTS/DIV to 10 mV and X1-X10 to X1 (fully ccw).

g. Connect a 10X probe to the CH 1 input. Connect the probe tip to a probe tip-to-bnc adapter, the adapter to a 50 Ω bnc termination, and the termination to a 50 Ω bnc 10X attenuator attached to the square-wave generator high-amplitude output connector. Set generator for a 5-division, 1 kHz display.

h. Compensate probe for best front corner of waveform.

i. Set CH 2 VOLTS/DIV to 20 mV and set generator for a 5-division display (remove 10X attenuator if necessary).

j. ADJUST—C4213 for flat top on square wave.

k. Set CH 2 VOLTS/DIV to .2 V, and square-wave generator output for a 5-division display (remove 10X attenuator, and also 50 Ω termination if necessary).

l. ADJUST—C4204 for a flat top on square wave.

m. Disconnect test equipment.

[1]Refers to window on VOLTS/DIV switch knob. Use 1X probe window unless otherwise specified in individual steps of the procedure.

C. TIME BASE

Equipment Required

1. Time-Mark Generator
2. 50 Ω Termination
3. 50 Ω BNC Cable
4. Low Capacitance Alignment Tool

PRELIMINARY CONTROL SETTINGS

Preset front panel controls as follows:

INTENSITY	Midrange
FOCUS	Midrange
Vertical Mode	CH 1
CH 1 VOLTS/DIV	.5 V[1]
CH 1 VAR	Detent
CH 1 AC-GND-DC	DC
CH 2 AC-GND-DC	GND
A SEC/DIV	.5 ms
X1-X10	X1 (fully ccw)
SOURCE	INT
MODE	AUTO
SLOPE	+OUT
HOLD-OFF	Fully ccw
LEVEL	Midrange
DISPLAY MODE	A
POSITION (all)	Midrange
DELAY TIME POSITION	Fully ccw

Set all other controls as desired.

The oscilloscope should produce a baseline trace with the controls set as above. Adjust INTENSITY and FOCUS controls as needed to maintain a well-defined display while making adjustments.

PROCEDURE

1. Horizontal Gain

a. Connect a 50 Ω cable from the time-mark generator to a 50 Ω termination at the CH 1 input. Set generator for .5 ms markers.

b. ADJUST—Horiz Cal, R2332 (see Fig. 4-5), and horizontal POSITION control for 1 marker per division over center 8 divisions.

2. A and B Sweep Timing

NOTE

For T932, use steps 2a and 2b only.

a. Set SEC/DIV to .5 μs and the generator for .5 μs time marks.

b. ADJUST—C2235 (see Fig. 4-5), and horizontal POSITION control for 1 marker per division over center 8 divisions.

c. Set: DISPLAY MODE B

d. ADJUST—C2535 and horizontal POSITION control for 1 marker per division over center 8 divisions.

e. Disconnect test equipment.

[1]Refers to window on VOLTS/DIV switch knob. Use 1X probe window unless otherwise specified in individual steps of the procedure.

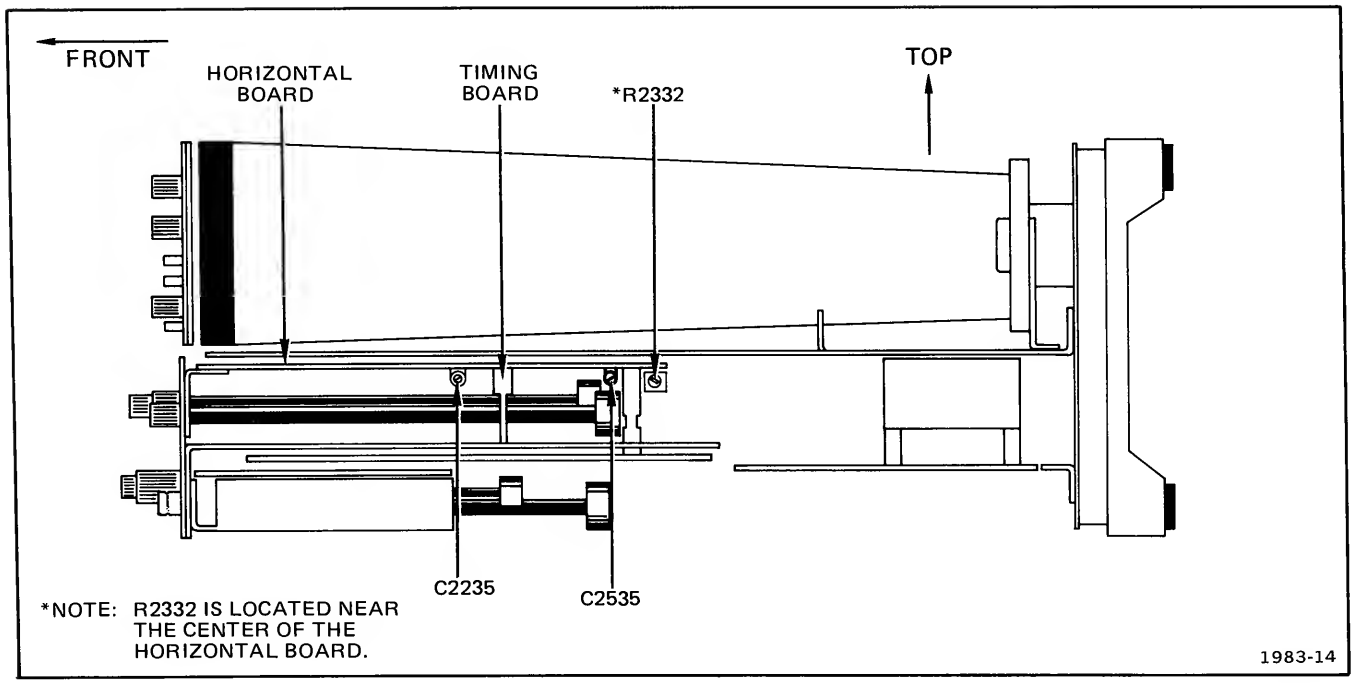

Fig. 4-5. Time Base adjustment locations (on right side of instrument).

SERVICE INFORMATION

The following information is provided to help you keep your T932 and T935 in good operating condition. We recommend that servicing be done by qualified service personnel only. You can, if you like, send your instrument to a Tektronix Service Center for re-adjustment and repair. Contact your local Tektronix representative for information about the Service Centers in your area.

CABINET REMOVAL

WARNING

Dangerous potentials exist at several points throughout the T932 and T935. When operating the instrument with the covers off, avoid touching connections and components. Some transistors have elevated cases. Disconnect the power before cleaning the instrument or replacing parts.

To remove the cover, take out the six screws (top and bottom) holding the two halves together. Pull the two halves apart.

To replace the cover, line up the slots on the cover with the front panel and the rear subpanel and slide together. Replace screws.

PREVENTIVE MAINTENANCE

Preventive maintenance consists of cleaning the instrument regularly and inspecting it occasionally for broken or damaged parts. Regular maintenance will improve the reliability of your instrument and prevent breakdowns.

Cleaning

Accumulations of dirt and dust on components act as an insulating blanket preventing efficient heat dissipation. Dust on circuit boards and wires can cause arcing and short circuits, resulting in damage to components or even instrument failure. Your instrument should be cleaned before this happens!

The cabinet provides protection from dust and dirt and should be in place during normal operation of the instrument.

CAUTION

Avoid the use of chemical cleaning agents containing benzene, toluene, xylene, acetone or similar solvents. These chemicals may damage the plastics used in this instrument. Recommended cleaning agents are isopropyl alcohol or Kelite (1 part Kelite, 20 parts water).

Exterior. Dust the cabinet with a soft cloth. Dust the front panel controls with a small soft paint brush. Dirt clinging to the surface of the cabinet may be removed with a soft cloth dampened with a mild detergent and water solution. Avoid using abrasive cleaners. They will scratch the cabinet and front panel.

Interior. Dust in the interior of the instruments should be removed before it builds up enough to cause arcing and short circuits during periods of high humidity. Dust is best removed from the interior by dry (approximately 9 lb/in^2), low-pressure air. Dirt clinging to surfaces may be removed with a soft paint brush or cloth dampened with a mild detergent and water solution. Use a cotton-tipped applicator for cleaning in narrow spaces and on the circuit boards.

Switch Contacts

CAUTION

Do not use acetone, MEK, MIBK, benzene, toluene, carbon tetrachloride, trichloroethylene, methyl alcohol, methylene chloride, sulphuric acid, or Freon TC, TE, TF, TA, 12, 22, to clean the switch contacts. Check the contents of spray coolants and cleaners before using.

Most of the switches are cam-actuated assemblies which do not require frequent maintenance. When maintenance is necessary due to accumulated dirt and dust on the contacts, observe the following precautions: Clean the switch contacts with isopropyl alcohol or a solution of one part Kelite to 20 parts water. If these are not available, petroleum ether, white kerosene, or a solution of 1% Joy detergent and 99% water may be used.

Recommended circuit coolants are dry ice and isopropyl alcohol.

The cam switch contacts are designed to operate without lubrication. They do require cleaning periodically to remove accumulations of dust and dirt. The use of lubricants, or cleaners that leave a residue, increase dust attraction and should be avoided.

Visual Inspection

Inspect the interior occasionally for broken connections, improperly seated semiconductors, damaged or improperly installed circuit boards, heat damaged components, etc. If heat damaged components are found, care must be taken to find the cause of the excessive heat and measures must be taken to prevent recurrence of the damage.

Lubrication

Most of the potentiometers are permanently sealed. Both the cam- and lever-type switches are installed with proper lubrication where necessary. Therefore, periodic lubrication is not recommended and only rarely should lubrication even be necessary.

Semiconductor Checks

Periodic checks of the semiconductor devices in this instrument are not recommended. The best check of semiconductor performance is actual operation in the instrument.

Re-adjustment

Re-adjust the instrument whenever the Performance Check indicates the instrument is not meeting specifications. The Performance Check should be performed on a regular basis; for example, every 1000 hours of operation or every six months.

TROUBLESHOOTING

If you perform preventive maintenance on a regular basis, you should correct most problems before your instrument breaks down. Occasionally, you may have to troubleshoot. In addition to the following information, you may find information in the Circuit Description and Diagrams section useful.

Troubleshooting Aids

Troubleshooting Chart. Use the troubleshooting chart (Fig. 5-1) to locate problem areas.

Diagrams. Complete circuit diagrams are located on the foldout pages in the Circuit Description and Diagrams section. The component number and electrical value of each component in the instrument are shown on the diagrams (see the first page of the Diagrams section for the definitions of the reference designators used to identify components). Each main circuit is assigned a series of component numbers to assist in identifying their circuit location. Important voltages and waveforms are also shown on the diagrams. Also, a heavy line encloses the portion of the circuit mounted on a circuit board.

Color Codes. The resistors used in this instrument are either brown composition or precision metal-film resistors. The resistors are color-coded with the EIA color-code. (Some metal-film resistors may have the value printed on the body.) Refer to Fig. 5-2. For the values of the thick film resistors refer to the parts list.

The capacitance values of common disc and some small electrolytic capacitors are marked on the side of the component body. The white ceramic capacitors are color-coded, using a modified EIA code. (See Fig. 5-2).

The cathode end of each glass-encased diode is indicated by a stripe, a series of stripes, or a dot.

Power Cord Conductor Identification

Conductor	Color	Alternate Color
Ungrounded (Line)	Brown	Black
Grounded (Neutral)	Blue	White
Grounding (Earthing)	Green-Yellow	Green-Yellow

Semiconductor Lead Configuration. Fig. 5-3 shows the lead configuration of the semiconductor devices used in this instrument.

Multi-Connector Holders. The multi-connector holder is keyed with two triangles, one on the holder and one on the circuit board. When a connection is made perpendicular to a circuit board surface, the orientation of the triangle and the slot numbers on the connector holder are determined by the direction of the nomenclature marking (see Fig. 5-4).

TABLE 5-1

Power Supply Tolerance

Supply	Tolerance
−8 V	Set within 0.5%
+8 V	Within 3%
+100 V	Within 5%

Troubleshooting Equipment

The following equipment is useful for troubleshooting.

1. Semiconductor Tester

Description: Dynamic-type tester. Must be capable of measuring reverse breakdown voltages of at least 400 V.

Purpose: To test semiconductors.

Example: Tektronix Type 576 Curve Tracer or Tektronix 577 (D1 or D2) Curve Tracer with 177 Test Fixture.

2. Test Oscilloscope

Description: Frequency response, dc to at least 15 MHz. A 10X, 10 MΩ voltage probe should be used to reduce circuit loading for voltage measurements.

Purpose: To check operating waveforms.

3. Multimeter

Description: Non-loading digital multimeter. Voltmeter, 10 MΩ input impedance and 0 to 150 V range; dc voltage accuracy, within 0.15%; display, 4-1/2 digits. Ohmmeter, 0 to 20 MΩ. (2 kV rating required for high voltage supply measurement.)

Purpose: To check voltages and for general troubleshooting.

4. Variable Autotransformer

Description: Output variable from 0 to 140 V, 1.2 A minimum rating. Must have a three-wire power cord, plug and receptacle.

Purpose: To vary the input line voltage when troubleshooting in the power supply.

Example: General Radio W8MT3VM or W10MT3W Metered Variac Autotransformer.

5. Vertical Amplifier Extender Troubleshooting Fixture

Description: 18 inch ribbon cable with an interface connector at each end (Tektronix part 067-0773-00).

Purpose: To operate the vertical amplifier outside the instrument. Useful for troubleshooting the time base which is inaccessible with the vertical amplifier installed.

Troubleshooting Techniques

The following checklist is arranged so that you check the simple things before you get the instrument taken apart. Start at the beginning.

1. Check the Control Settings. See the Operating Instructions for the correct control settings.

2. Check Associated Equipment and Connectors. Check to see that the signal source is properly connected and that the interconnecting cables are not defective. Also check the power cord and plug and the power source for defects.

3. Check the Performance of the instrument. If the instrument does not meet specifications, the trouble may be corrected by readjusting the instrument. See the Adjustment Procedure, Section 4, for instructions.

4. Visual Check. A visual check may reveal broken connections, damaged components, semiconductors not firmly mounted, damaged circuit boards, etc.

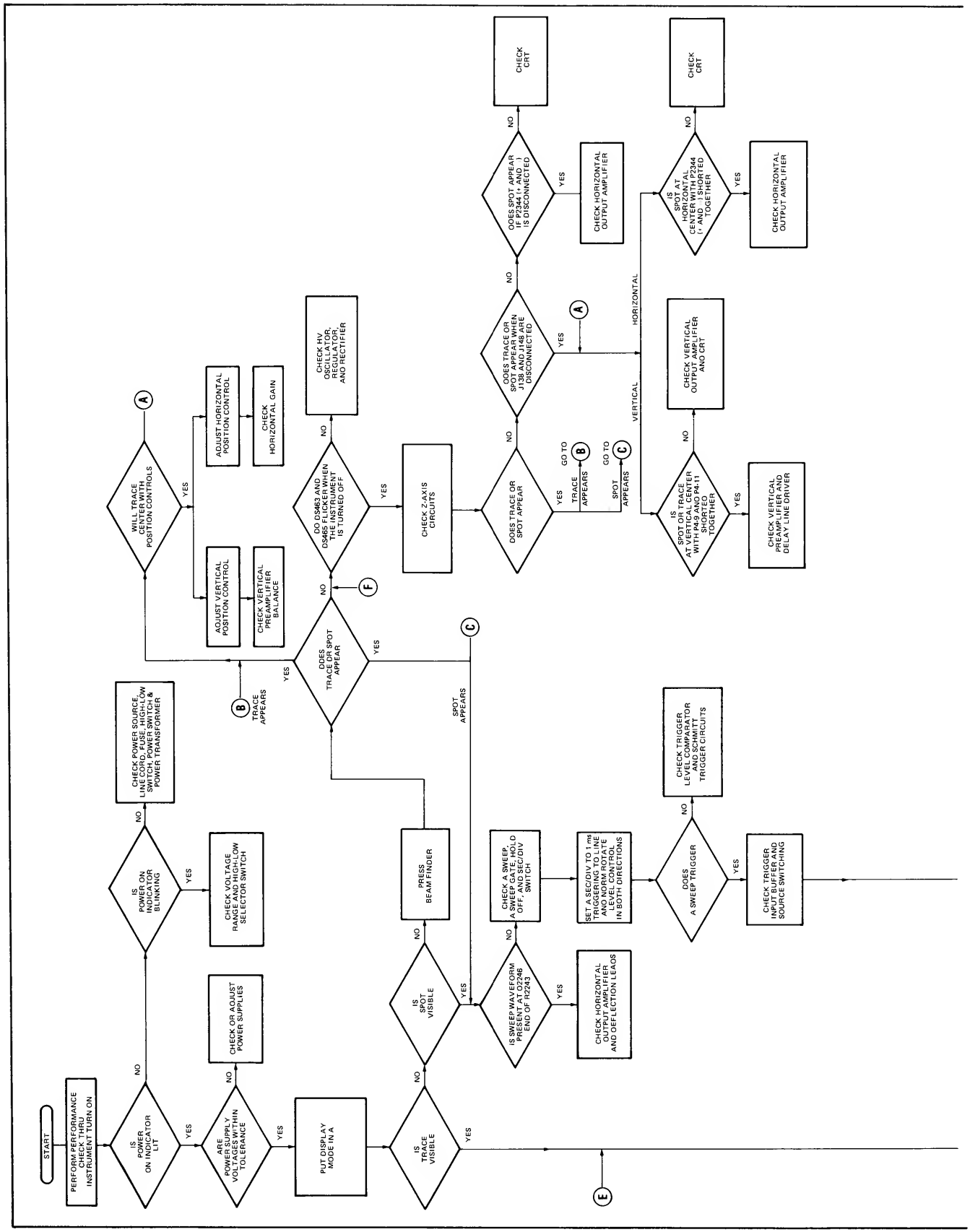

Fig. 5-1. Troubleshooting chart.

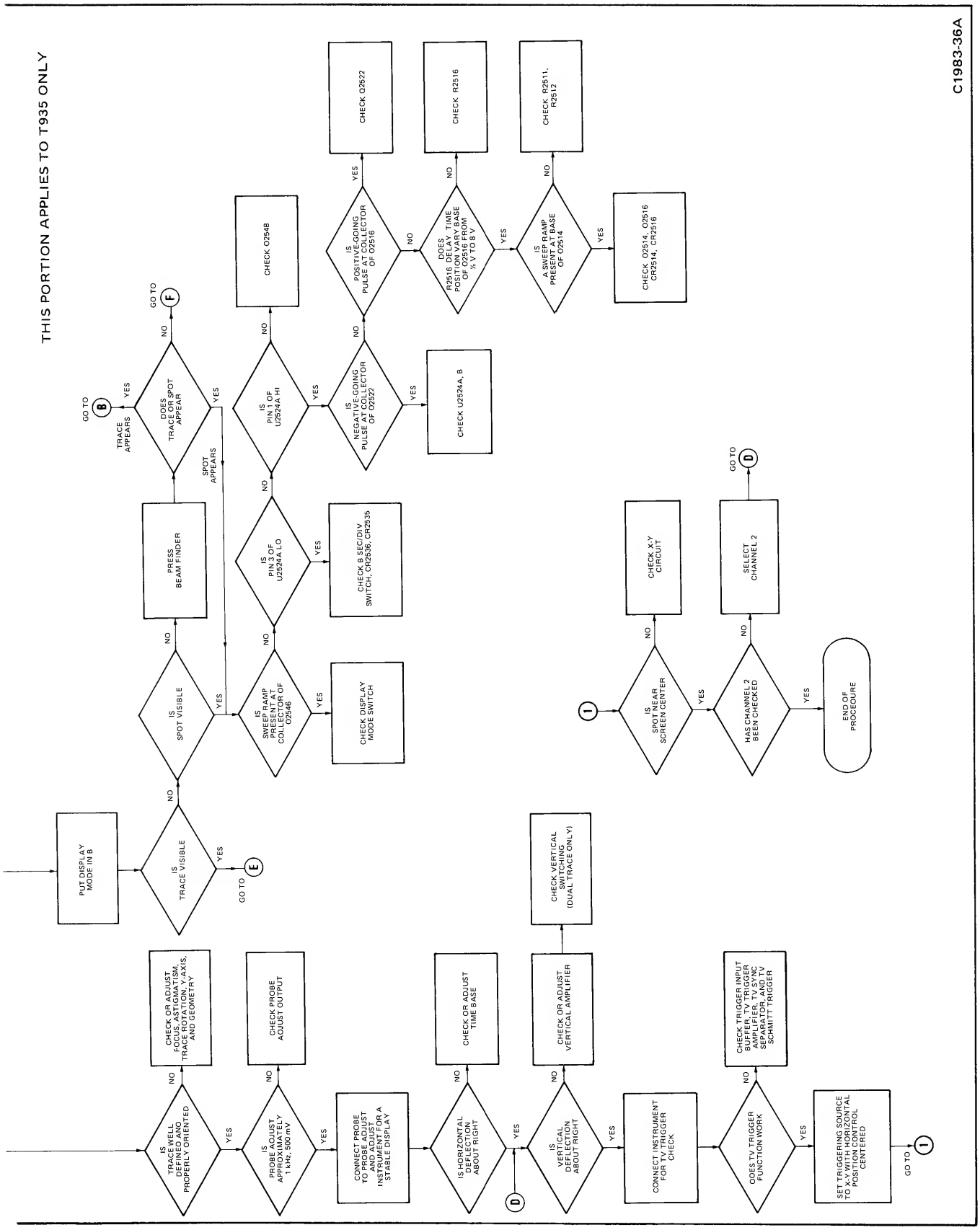

Fig. 5-1. Troubleshooting chart (cont).

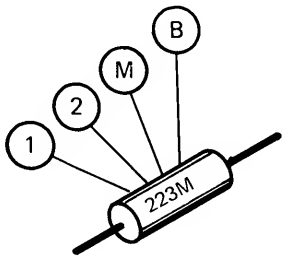

SMALL TUBULAR CAPACITORS

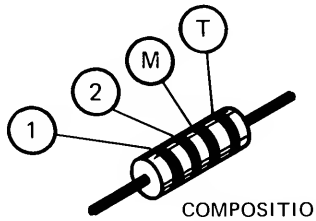

COMPOSITION RESISTORS

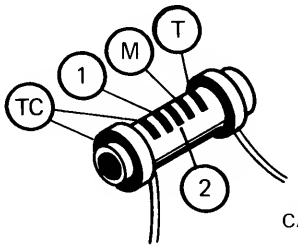

CERAMIC CAPACITORS

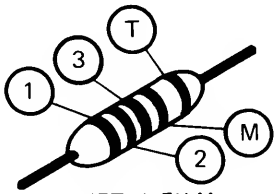

METAL-FILM RESISTORS

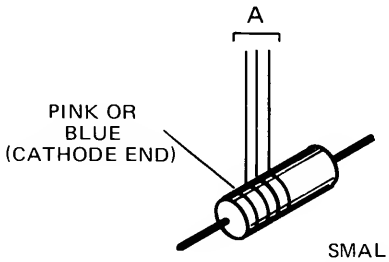

SMALL SIGNAL DIODES

(A) COLORS IDENTIFY SIGNIFICANT DIGITS IN TEKTRONIX PART NUMBER (E.G. BROWN, GRAY, GREEN STRIPES INDICATE PART NUMBER 152-0185-00)

(1) (2) and (3) 1ST, 2ND, AND 3RD SIGNIFICANT FIGS.

(M) MULTIPLIER (T) TOLERANCE;

(TC) TEMPERATURE COEFFICIENT.

(B) TOLERANCE; F=±1%, J=5%, K=10%, M=20%

(T) AND/OR (TC) COLOR CODE MAY NOT BE PRESENT ON SOME CAPACITORS;

COLOR	SIGNIFICANT FIGURES	RESISTORS (Ω)		CAPACITORS (pF)		
		MULTIPLIER	TOLERANCE	MULTIPLIER	TOLERANCE	
					over 10 pF	under 10 pF
BLACK	0	1	---	1	±20%	±2 pF
BROWN	1	10	±1%	10	±1%	±0.1 pF
RED	2	10^2 or 100	±2%	10^2 or 100	±2%	---
ORANGE	3	10^3 or 1 K	±3%	10^3 or 1000	±3%	---
YELLOW	4	10^4 or 10 K	±4%	10^4 or 10,000	+100% –9%	---
GREEN	5	10^5 or 100 K	±½%	10^5 or 100,000	±5%	±0.5 pF
BLUE	6	10^6 or 1 M	±¼%	10^6 or 1,000,000	---	---
VIOLET	7	---	±1/10%	---	---	---
GRAY	8	---	---	10^{-2} or 0.01	+80% –20%	±0.25 pF
WHITE	9	---	---	10^{-1} or 0.1	±10%	±1 pF
GOLD	–	10^{-1} or 0.1	±5%	---	---	---
SILVER	–	10^{-2} or 0.01	±10%	---	---	---
NONE	–	---	±20%	---	±10%	±1 pF

1982-31

Fig. 5-2. Color code for resistors and capacitors.

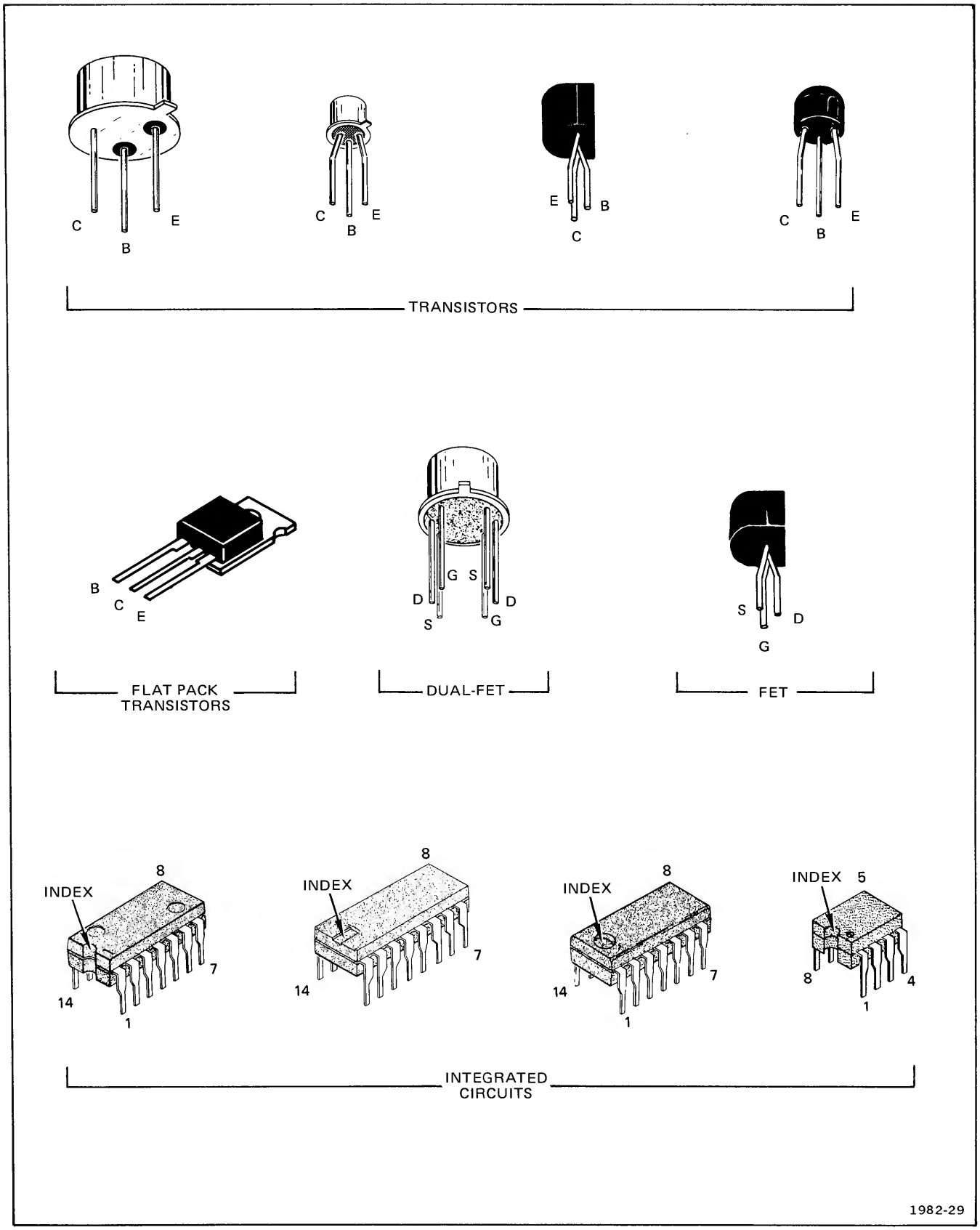

Fig. 5-3. Lead configuration for semiconductor devices.

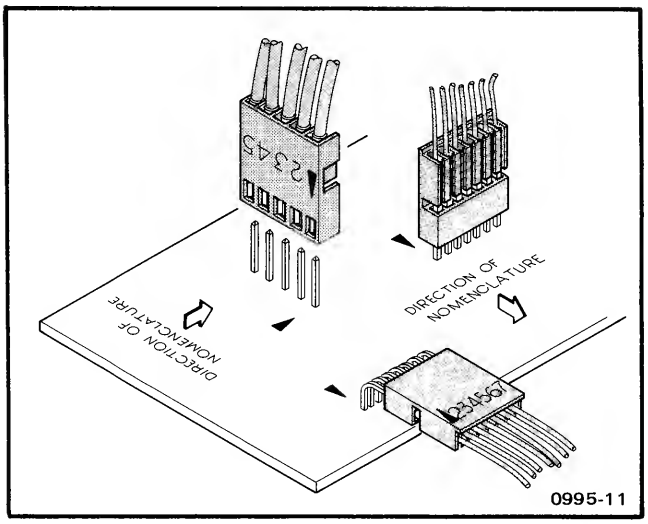

Fig. 5-4. Multi-connector holder orientation.

5. Isolate the Trouble to a Circuit. To isolate trouble to a particular circuit, note the trouble symptom. The symptom often identifies the circuit where the trouble is located. For example, poor focus indicates that the crt circuit (including the high-voltage supply) is probably at fault. When trouble symptoms appear in more than one circuit, check affected circuits by taking voltage and waveform readings.

Incorrect operation of all circuits often indicates trouble in the power supply. Check first for correct voltage of the individual supplies. However, a defective component elsewhere in the instrument can appear as a power supply trouble and may also affect the operation of other circuits. Table 5-1 lists the tolerances of the power supplies. Voltages are measured between the power supply test points and ground. If a power supply voltage is within the listed tolerance, assume the supply is working correctly.

Use the troubleshooting chart to locate trouble. Not all problems appear on the chart. Continue with this checklist in those cases.

6. Check Voltages and Waveforms. Often a defective component can be located by checking for the correct voltages and waveforms in a circuit.

NOTE

Voltages and waveforms given on the diagrams are not absolute and therefore may vary slightly between instruments. To obtain operating conditions similar to those used to take these readings, see the voltage and waveform setup procedures in the Diagrams section. Individual deviations should be noted on the schematics for future reference.

7. Check the individual components. Remember that the best check of semiconductors—transistors, diodes, IC's—and thick film resistors is actual operation in a circuit. If you suspect that a semiconductor is bad, substitute a new one for it. Before you start checking IC's, read the part of the Circuit Description that covers the circuit.

WARNING

The power switch must be turned off before removing or replacing components to prevent electrical shock or circuit damage.

To check other components, resistors, capacitors, and inductors, clip one lead and lift it. You may have to add a piece of wire when you resolder the connection, however.

Resistors: Check the resistors for discoloration. Then check the resistors with an ohmmeter after disconnecting one end from the circuit. Check the Replaceable Electrical Parts list for the tolerance of the resistors used in this instrument. Resistors normally do not need to be replaced unless the measured value varies widely from the specified value.

Inductors: Check for open inductors by checking continuity with an ohmmeter. (It may be helpful to disconnect one end of the inductor when checking continuity.) Shorted or partially shorted inductors can also be found by checking the waveform response when high-frequency signals are passed through the circuit. Partial shorting often reduces high-frequency response (increases roll-off).

Capacitors: A leaky or shorted capacitor can be detected by checking resistance with an ohmmeter on the highest scale, after disconnecting one end from the circuit. Do not exceed the voltage rating of the capacitor (some ohmmeters use 30 volts as source voltage). The resistance reading should be high after inital charge of the capacitor. An open capacitor can also be detected with a capacitance meter or by checking whether the capacitor passes ac signals.

Switches: The most common cause of switch failure is dust between the contact and the pad. Check the suspected contact for continuity with an ohmmeter. If open and not obviously damaged, try cleaning (see Cam Switch Repair and Replacement).

Another frequent cause of switch failure is solder smoke residue. This can occur when replacing a component near the switch. This problem is usually indicated by reduced high-frequency response. Flushing the contact with isopropyl alcohol usually fixes this problem.

If the contact is physically damaged, replace the contact strip. Bending the contact is only a temporary repair. See Cam Switch Repair and Replacement.

8. After repairing a circuit or replacing components, check the performance of the instrument. If the Performance Check is within specifications, it is not necessary to re-adjust the instrument. If the instrument does not meet the specifications, perform the Adjustment Procedure in Section 4.

Troubleshooting Hints

Power. SYMPTOM—No visible trace and no display when the BEAM FINDER button is pushed (Power ON lamp is lit).

a. Does beam appear on screen? If not, rotate INTENSITY control clockwise while holding BEAM FINDER button in until beam appears or control is fully clockwise. If beam does not appear, the trouble may be in the power supplies (see Power Supply schematic).

b. Check all low voltage power supplies, starting with −8 V (−8 V is reference supply), the +8 V, and +100 V at appropriate test points.

(1) If no voltage is present, check F700.

(2) If −8 V is low (or zero), check Q772, Q774, Q776, or U742.

(3) If −8 V is correct but +8 V is low (or zero), check Q752, Q754, Q756, and U742 (U742 is used for both −8 and +8 V supplies).

c. Check high-voltage supplies (see CRT and Vertical Amplifier schematic).

(1) Check for −2 kV at pin 1, P465, or pin 2, crt base socket. Use DVM for all voltage checks in this circuit to prevent circuit loading.

(2) If no −2 kV, check for 50 kHz sine wave (approximately 200 V, peak-to-peak) at pin 5 of T460 (high-voltage transformer primary).

(3) If neither −2 kV or 50 kHz sine wave is present, check Q454, Q458, and Q446.

CAUTION

Do not unload the secondary of the high-voltage transformer, T460; the transformer may be damaged.

Z-Axis. SYMPTOM—No intensity or no control over intensity (BEAM FINDER button pushed).

a. Does beam come on screen? If not, and low and high-voltage supplies are correct, trouble may be in Z-Axis circuit (see CRT and Vertical Amplifier schematic).

(1) Check for approximately 60 V swing between crt-socket pins 2 and 3. If no voltage swing, trouble may be in unblanking.

(2) Check for pulse at Q416 emitter. This pulse amplitude should vary from 20 to 80 mV with change (fully cw to fully ccw) in INTENSITY control position.

(3) Check for 0-40 V, peak-to-peak unblanking pulse (varies with INTENSITY control position) at Q426 collector.

(4) If no unblanking pulse, check Q426, Q424, Q416, or Q434.

VERTICAL: SYMPTOM 1.—No trace on crt or vertical POSITION control does not center display (see Vertical Switching and CRT and Vertical Amplifier schematics).

a. If trace is on screen, but about 2 cm above graticule center, it indicates trouble in vertical amplifier.

b. Short P4-9 to P4-11 (A8, Vertical board). If trace does not center, trouble is in output circuits. Check Q112, Q122, Q134, Q144, Q136, and Q146.

c. If trace centers with pins 9 and 11 short-circuited, trouble is ahead of P4.

d. Short Q4376 collector to Q4386 collector. If trace centers, trouble is ahead of delay-line drivers, Q4376-Q4386.

e. Check voltage at Q4344 and Q4346 emitters. Each should read approximately +5 V above ground. If emitter voltage is okay, trouble is either in Q4344 or Q4346, or in switching circuit.

SYMPTOM 2.—With 50 mV signal ac coupled to CH 1 input and VOLTS/DIV set to 10 mV, crt display position is low and does not position above graticule center.

a. If trace does not appear on screen, rotate vertical POSITION control.

b. If trace appears, but decreases in amplitude at graticule center, suspect vertical output circuit.

c. Short Q136 collector to Q146 collector. If trace centers, short Q112 collector to Q122 collector. Trace should center. If not, suspect Q112, Q134, or Q136 and associated circuitry.

Triggering: SYMPTOM 1.—Trace free runs, does not trigger in AUTO or NORM (see Trigger schematic).

a. Set TRIGGERING MODE to AUTO. Turn LEVEL control cw and ccw to both limits. Does the trace flicker? If not, triggering signal is not reaching sweep circuit.

b. Check voltage at junction of R2151, R2152, and R2143. Does voltage vary from −2 to +3 V while turning LEVEL control throughout its range? If yes, check U2156B output. Does U2156 output level change while turning LEVEL control as above?

c. Connect a signal to CH 1. Check for trigger pulse at U2156B output. If no signal, suspect U2156A or B, or related circuits.

SYMPTOM 2.—Does not trigger in AUTO.

a. Check for trigger pulse at pin 6 of U2212B. If none, check for HI at U2212B, pin 4, while varying the LEVEL control. If pin 4 does not go HI, check for defective U2212B, U2224B, or CR2227.

A Sweep: SYMPTOM 1.—No A Sweep on crt (see A Sweep and Horizontal Amplifier schematic).

a. Push BEAM FINDER button. If trace or dot is right of center, check at R2243 (end of resistor toward board center) for a 12 V (approximately) ramp.

b. If ramp is not present, check for approximately 0.7 V at Q2274 base.

c. If voltage at Q2274 base is high (approximately 8.0 volts) check Q2274, Q2242, Q2244, or Q2246.

SYMPTOM 2.—No trace on crt.

a. Repeat sweep symptom 1, parts a and b.

b. Check for a HI at U2234C, pin 8. If not HI, check U2234C.

B Sweep SYMPTOM 1.—No B Sweep on crt (see B Sweep schematic) but A Sweep is present.

a. Check for 12 V ramp at collector of Q2546.

b. If ramp is not present, check for LO at pin 3 of U2524B. If pin 3 is HI, check DISPLAY MODE switch S2510 and for HI at pins 1 and 2 of U2524B.

c. If pin 1 is not HI, check Q2548.

d. If pin 2 is not HI, check for a LO at pin 5 of U2524A. If pin 5 is not LO, check Q2514, Q2516, and Q2522.

e. If pin 3 of U2524B is LO, check Q2542, Q2544, and Q2546.

SYMPTOM 2.—No intensified portion of sweep in the A INTEN BY B mode.

a. Check DISPLAY MODE switch S2510.

NOTE

When troubleshooting the sweep or horizontal circuits, the Vertical AMPLIFIER may be removed from the instrument.

Sweep may lock up while troubleshooting. If in doubt, switch instrument power off and back on. If there are no problems, trace should free run.

Horizontal. SYMPTOM 1.—No trace on screen (see Sweep and Horizontal Amplifier schematic).

a. Check output (Q2334-Q2344 collectors) for approximately 40 V ramp. If okay, check for possibly defective crt leads.

SYMPTOM 2.—Trace on screen, but is short.

a. Check horizontal output (Q2334-Q2344 collectors) for approximately 40 V ramp.

b. If no ramp at output, check for 12 V ramp at junction of R2243-R2311, C2246-R2245.

c. If ramp is present, check Q2314, Q2326, Q2332, Q2334, or Q2344.

CORRECTIVE MAINTENANCE

Corrective maintenance consists of repair and parts replacement. This section contains general information, troubleshooting information, and component replacement information.

NOTE

Be sure you are familiar with soldering techniques and parts replacement procedures before replacing any components.

Soldering Techniques

WARNING

To prevent electrical shock, or damage to the instrument, always disconnect the instrument from the power source before soldering.

The T900 Series uses some single-sided circuit boards, i.e., wiring is plated on only one side. The components are located on the front of the circuit boards. The circuit designations have been silk-screened onto the component side of the circuit board next to the components. The circuit boards are mounted with the component side out to allow access to the components. If it is necessary to replace a component, the leads may be clipped and the new part soldered to the leads of the previous one. However, be careful not to loosen the connection with the etched circuit wiring on the back of the circuit board.

For soldering, use ordinary 60/40 solder and a 15-watt soldering iron. Excessive heat can cause the etched circuit wiring to separate from the board base material. Use caution if using a higher wattage-rated soldering iron on the circuit boards.

NOTE

If the instrument does not work after replacing components by soldering to the leads of the previous one, the connection with the etched circuit wiring may be broken. To check the connections, it is necessary to remove the circuit board from the instrument. Refer to the circuit board replacement information.

Replacement Parts

All parts for the T932 and T935 can be ordered from your local Tektronix Field Office, but many of the components are standard items that may be more readily available locally. Check the parts list for value, tolerance, ratings, and description before you replace any components.

When ordering parts from Tektronix, include the following information:

(1) Instrument type.

(2) Instrument serial number.

(3) A description of part (if electrical, include the circuit number).

(4) Tektronix part number.

Component Replacement

WARNING

Disconnect the instrument from the power source before replacing components.

Since the components are located on one side of the circuit boards, it is necessary to remove the circuit boards before replacing some components. Refer to the paragraphs on circuit board replacement for instructions in removal and installation of each circuit board. Also be sure you're familiar with soldering techniques used on single-sided circuit boards.

Semiconductors

Replacement of semiconductors may affect the adjustment of this instrument. After replacing semiconductors, especially if using parts other than those listed in the parts list, check the performance of the instrument to be sure that the performance has not been degraded.

WARNING

Handle silicone grease with care. Avoid getting silicone grease in the eyes. Wash hands thoroughly after use.

Replacement semiconductors should be of the original type or a direct replacement. Lead configuration of the semiconductors used in this instrument are shown in this section. Some plastic case transistors have lead configurations which do not agree with those shown there. If a replacement transistor is made by a different manufacturer than the original, check the manufacturer's basing diagram for correct basing. Most transistors are soldered directly onto the circuit boards. Transistors having heat radiators or those mounted on the chassis use silicone grease to increase heat transfer. Replace the silicone grease when replacing these transistors. Those transistors mounted on the chassis are held in place by a metal clip.

NOTE

After replacing a power transistor, check that the collector is not shorted to ground before applying power.

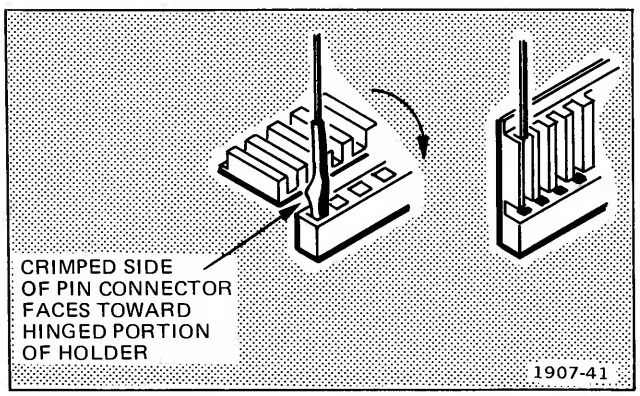

Fig. 5-5. Pin connector replacement.

Fuse Replacement

The line-voltage fuse, F700, is located next to the POWER ON switch, S700, on the Interface board. The high voltage fuse, F722, is located on the Power Supply board. Refer to the Replaceable Electrical Parts list for correct fuse values.

Thick Film Resistor Replacement

To remove the thick film resistors, first remove the solder from the pins and then remove the resistors.

To install the thick film resistors, R444 or R118, match the pins on the resistor with the holes in the circuit board. Resolder all of the pins to the circuit board.

Interconnecting Cable and Pin Connector Replacement

The interconnecting cable assemblies are factory assembled. They consist of machine installed pin connectors mounted in plastic holders. The plastic holders are easily replaced as individual items, but if the connectors are faulty, the entire cable should be replaced.

It is possible for the pin connectors to become dislodged from the plastic holders. If this happens, the connector can be re-installed as follows (see Fig. 5-5).

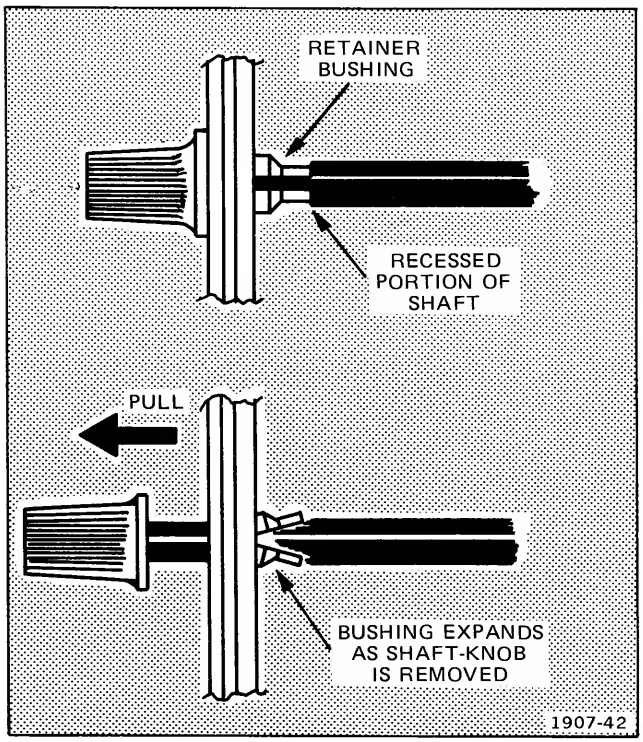

Fig. 5-6. Shaft-knob removal.

1. Bend grooved portion of holder away from cable as shown.

2. Re-insert connector into its hole in plug-in portion of holder.

NOTE

Holder positions are numbered (number one is identified with a triangle).

3. Bend grooved part of holder so that connector is inserted into groove.

When plugging connector holders onto board pins, be sure to match triangle mark on holder with triangle mark on circuit board.

Shaft-Knob Removal

1. Grip knob end with one hand and shaft end with other hand.

2. Pull on knob, while pushing on shaft, to free recessed portion of shaft from retainer bushing (see Fig. 5-6). Some shaft-knobs may require considerable force to remove.

CAUTION

The bushing and shaft may separate abruptly. To avoid damage to the potentiometer and circuit board, or personal injury, grip both pieces firmly during shaft-knob removal. It may be helpful to grip the shaft with the tip of a long-nose pliers and use a gentle rocking motion to separate the shaft from the bushing.

Vertical Amplifier Replacement

To remove the vertical amplifier (see Fig. 5-7) from the instrument:

1. Support the vertical amplifier, while removing the retaining screws. One is between the attenuators, one is near C4307, and one is near R4373.

2. Disconnect P4 (see Fig. 5-7) from J4 on the Interface board by lifting the entire vertical amplifier. Be careful not to bend the pins.

To reinstall the vertical amplifier, reverse the above procedure.

NOTE

The front panel, switches, delay line, and attenuators are attached to the Vertical board.

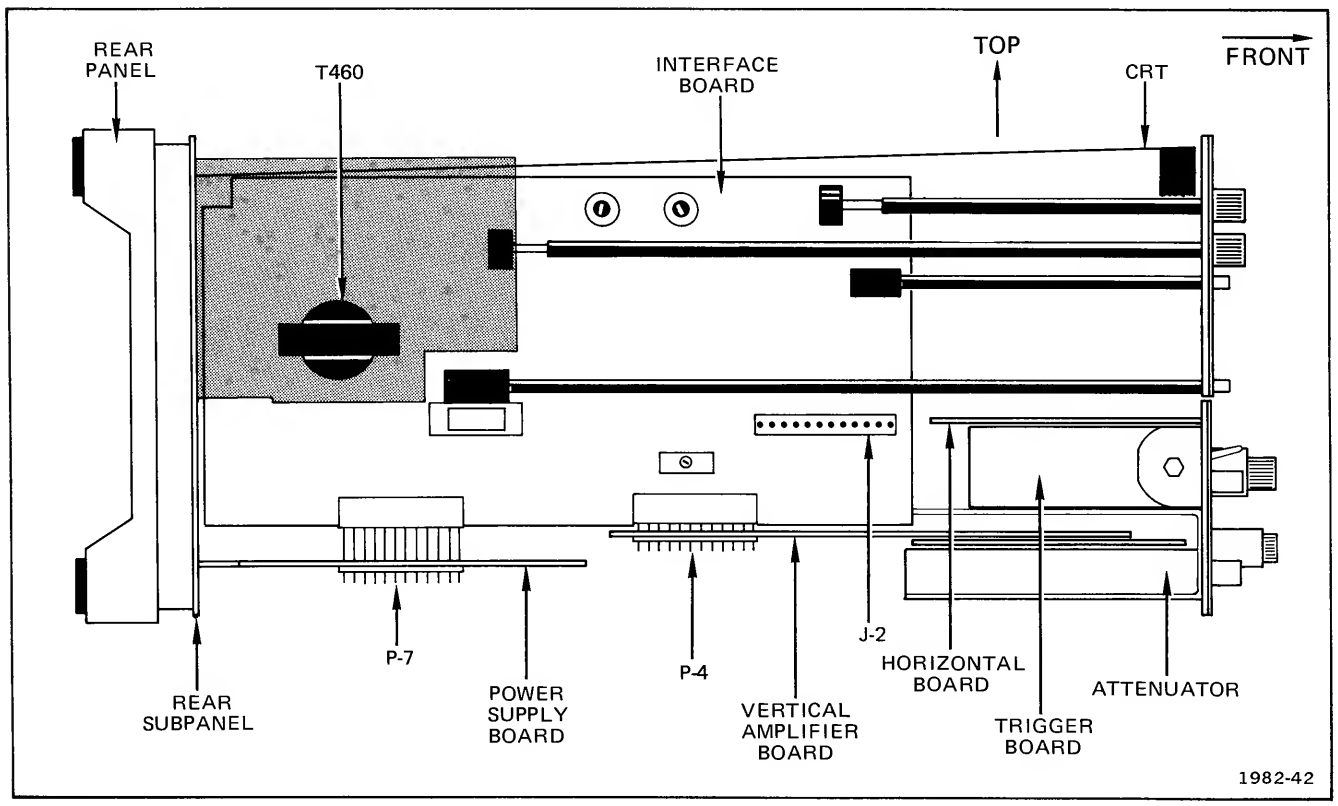

Fig. 5-7. Circuit board locations (on left side of crt).

Attenuator Replacement

To remove the attenuator from the instrument:

1. Remove the POSITION control knob and shaft.

2. Remove the VOLTS/DIV VAR knob and shaft. To remove the shaft, loosen the set screws holding the shaft to the potentiometer and pull the shaft out (observe knob orientation for re-assembly reference).

3. Pull the VOLTS/DIV knob and shaft out of the front panel.

4. Remove the three retaining screws from the attenuator shield and the hex nut behind the front panel near the bnc connector.

5. Pull the attenuator assembly off the Vertical Amplifier board. Be careful not to bend the connector pins.

6. To remove the attenuator shield, first unsolder the leads to the bnc connector. Take care not to touch the body of the capacitor with a hot soldering iron. Then remove one retaining screw from the board side. Be careful not to remove the screws holding the cam switch against the attenuator board. Lift the shield off the attenuator.

To reinstall the attenuator:

1. Attach the attenuator shield to the board with one screw, and resolder the lead to the bnc connector. Avoid touching the capacitor with a hot soldering iron.

2. Slide the bnc connector and coupling switch into the front panel.

3. Make sure the connecting pins and holders on the bottom of the attenuator board align properly.

4. Press the attenuator board down on the Vertical Amplifier board and secure it with the three retaining screws.

NOTE

The VOLTS/DIV shaft end is molded to form a key that fits into the cam. Attempting to force the shaft into the cam when it is not properly lined up, will damage the cam switch.

5. Line the VOLTS/DIV knob and shaft up with the cam and slide into place. When the shaft and cam are lined up, the shaft slides into the cam easily.

6. Reinstall the VOLTS/DIV VAR knob and shaft, and tighten the set screws.

Cam Switch Repair and Replacement

A cam switch is actually an assembly consisting of a cam rotated by a front panel control and a set of contacts on an adjacent circuit board.

CAUTION

Repair of cam switches should be undertaken only by experienced repair personnel. Switch alignment and spring tension of the contacts must be carefully maintained for proper operation of the switch. For assistance in repair of the cam switches, contact your local Tektronix Field Office or representative.

Cleaning. If the contact is not obviously damaged, try cleaning it before replacing. Follow the cleaning procedures in the order given; the first ones are the easiest.

CAUTION

When cleaning cam switch contacts:

1. Don't use cleaners, detergents, or lubricants which leave a residue. The residue can interfere with the high-frequency response of the contact. Also, the residue will attract dust and cause the contact to require frequent cleaning.

2. Don't use any cleaners which contain fluorocarbons. These will damage the cam portion of the switch. Fluorocarbons also damage the circuit board material used in some instruments.

3. Don't use anything that could snag the contact, like a cotton swab.

4. Don't scrape the pad. If the gold is removed from the pad, the pad will oxidize and cause future problems.

5. Don't bend the contacts. This may temporarily fix the problem. However, bending the contact damages its self-cleaning action and causes problems in the future.

Use the following procedures to clean the contacts:

1. Operate the switch several times. The wiping action may clean the contacts.

2. Blow low pressure air in the area of the contact while operating the switch.

3. Flush the contact with isopropyl alcohol and blow dry with low-pressure air. Isopropyl alcohol is flammable; avoid its use near open flame or other potential sources of ignition.

If the above procedures don't work, replace the contact strip. If cleaning the switch restores continuity, check to ensure that the contact wipes across the pad. If the contact does not wipe, replace the contact strip.

Contact Replacement. Cam Switch contacts in this instrument are part of a contact strip assembly. Refer to the mechanical parts list for ordering information.

If you do not have a replacement contact strip assembly, bend the contact for a temporary repair. If you do bend the contact, make note of its location and the symptom it causes. This will speed repair if the contact fails before you can make permanent repairs.

Delay Line Replacement

To remove the delay line from the instrument:

1. Remove the vertical amplifier. See Vertical Amplifier Replacement for instructions.

2. Remove the three cable wrap ends from the back of the vertical chassis by unfastening the three nuts.

3. Unsolder the two wires at each end of the delay line where they connect to the board. The darker colored wires go to the solder connections nearest the index marks on the board.

4. Remove the two screws holding the cable end clamps to the board.

5. To reinstall the delay line, reverse the above procedure.

Power Supply Board Replacement

To remove the Low Voltage Power Supply from the instrument:

1. Remove the two retaining screws holding the heat sink to the rear subpanel.

2. Remove the bolts near C743 and C722 (the ones holding the Power Supply board to the crt shield). The other two bolts hold the transformer to the Power Supply board.

3. Disconnect P7 from J7 on the Interface board by lifting the Power Supply board and transformer out. (See Fig. 5-7).

To reinstall the Power Supply board, reverse the above procedure.

Time Base Replacement

To remove the Time Base from the instrument:

1. Remove the Vertical Amplifier. See Vertical Amplifier Replacement for instructions.

2. Support the Time Base while removing the retaining screw in the upper right corner (near the POSITION control), the post by the LEVEL potentiometer, and the post in the lower right corner.

3. Carefully remove the leads from P2344 (a red on white crt lead to the − side of P2344 and a green on white crt lead to the + side of P2344).

4. Remove P2 (see Fig. 5-7) from J2 on the Interface board by pulling the entire Time Base toward the right side of the instrument. Be careful not to bend the pins.

To reinstall the TIME BASE, reverse the above procedure.

To remove the Trigger board, unsolder the coaxial cable from the X connector and unplug the board from the Horizontal board by pulling out and toward the back of the instrument.

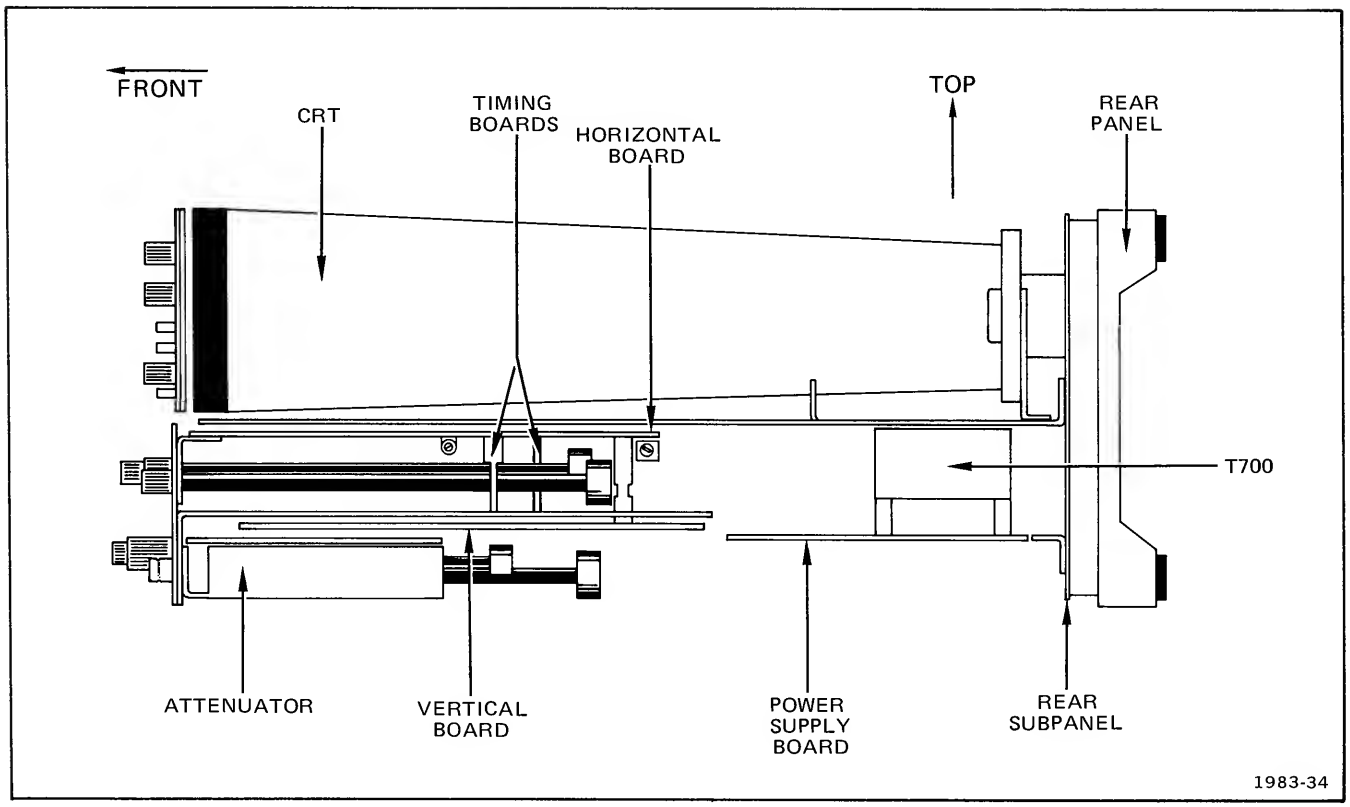

Fig. 5-8. Circuit board locations (on right side of crt).

To remove the Timing board, first remove the SEC/DIV knob and the POSITION control knob and shaft assembly. Then unplug the Timing board from the Horizontal board and pull the SEC/DIV shaft out of the front panel. To reinstall the timing board, reverse the procedure.

Interface Board Replacement

To remove the Interface board from the instrument:

1. Remove the Vertical Amplifier and Time Base.

2. Use a small screwdriver to remove the clip holding Q458 to the rear subpanel.

3. Remove the front-panel FOCUS and INTENSITY knobs and shafts.

4. Remove the high-voltage shield (two screws) and the two posts underneath the shield.

5. Disconnect the following plugs from the Interface board:

a. Cal Out (P24, unmarked on some boards), a brown on white wire that goes to PROBE ADJ on front panel.

b. P419 from J419 (a red on white wire from pin marked Z Axis that goes to EXT Z AXIS INPUT connector on back panel). Push wire through hole in board.

c. P470 from J470, (two plugs, each containing a red wire and a black wire that goes through hole in crt shield).

NOTE

To disconnect J475, J466, and J465, lift the cable retainers with a screwdriver until you can remove the cable.

d. Unplug P465 from J465 (a 4-pin plug); P466 from J466 (yellow on white single wire); and P475 from J475 (a 4-pin plug).

e. Unplug P138 from J138 (a blue on white wire); P148 from J148 (a brown on white wire); pull wires down through holes in board.

WARNING

The crt anode and the output terminal of high-voltage multiplier U460 may retain a 10,000 volt charge after the instrument is turned off. To avoid electrical shock, ground both the output terminal of U460 and the crt high-voltage anode lead to chassis ground.

f. Remove the high voltage lead from U460 (large white lead that goes the crt).

6. Remove the five retaining screws.

7. Disconnect J7 from P7 on Power Supply board by lifting the Interface board toward the top and back of the instrument so that the POWER (ON) light pipe disengages from DS796 housing, and the BEAM FINDER and OFF/ON (POWER) buttons slide back out of the front panel as J7 and P7 separate.

8. Unsolder the power cord conductors (a blue wire and a brown wire) from the back of the board.

To replace the Interface board, reverse the above procedure.

Cathode Ray Tube (CRT) Replacement

WARNING

Use care when handling a crt. Protective clothing and safety glasses should be worn. Avoid striking it on any object which might cause it to crack or implode. When storing a crt, place it in a protective carton or set it face down on a smooth surface in a protective location with a soft mat under the faceplate to protect it from scratches.

To remove the crt from the instrument, disconnect power cord plug from power input source and remove cabinet halves. Turn the front of the instrument toward you, and perform the following steps.

1. Remove the two screws holding the high-voltage shield over the Interface board, and remove the shield.

WARNING

The crt anode and the output terminal of high-voltage multiplier U460 may retain a 10,000 volt charge after the instrument is turned off. To avoid electrical shock, ground both the output terminal of U460 and the crt high-voltage anode lead to chassis ground.

2. Grip the insulated portion of the anode lead and disconnect it from the U460 output terminal, and ground both terminals to chassis. Pull the free end of the anode lead out through the chassis holes. This lead is part of the crt and is supplied with the new crt.

3. Grip the 14-pin crt base socket, and pull it backward off the base of the crt.

4. Disconnect the four-pin plug from J470 on the Interface board. This terminates two black wires and two red wires from the trace rotation (TR ROT) and Y AXIS controls.

5. Remove the three screws holding the Vertical Amplifier to the chassis, and separate the amplifier from the Interface board by pulling downward to disconnect the P4 connector.

6. Disconnect the two connectors from the pins on the left side of the crt neck. These are the vertical deflection plate leads, the upper wire color is blue on white and the lower wire color is brown on white.

7. Disconnect the two connectors from the pins on the bottom of the crt neck. These are the Horizontal Deflection Plate leads; the left wire color is red on white and the right wire color is green on white.

8. Carefully raise the plastic crt front support ring upward and to the right to disengage the two buttons on the bottom and the two buttons on the left side from the instrument chassis.

NOTE

Although it may be convenient, it is not necessary to remove any front panel or subpanel controls or parts. The foregoing steps will allow the front of the crt to be moved to the right of its normal position while slightly bending the plastic subpanel to allow clearance for the crt to be pulled forward out of its shield.

9. Gently press forward on the crt base, supporting the front of the crt, until the front extends far enough forward to grasp. Pull the crt the rest of the way out of its shield.

10. To install a new crt, reverse the above procedure.

REPACKAGING FOR SHIPMENT

If the Tektronix instrument is to be shipped to a Tektronix Service Center for service or repair, attach a tag showing: owner (with address) and the name of an individual at your firm that can be contacted. Include complete instrument serial number and a description of the service required.

Save and re-use the package in which your instrument was shipped. If the original packaging is unfit for use or not available, repackage the instrument as follows:

Surround the instrument with polyethylene sheeting to protect the finish of the instrument. Obtain a carton of corrugated cardboard of the correct carton strength and having inside dimensions of no less than six inches more than the instrument dimensions. Cushion the instrument by tightly packing three inches of dunnage or urethane foam between carton and instrument, on all sides. Seal carton with shipping tape or industrial stapler.

The carton test strength for your instrument is 275 pounds.

REPLACEABLE ELECTRICAL PARTS

PARTS ORDERING INFORMATION

Replacement parts are available from or through your local Tektronix, Inc. Field Office or representative.

Changes to Tektronix instruments are sometimes made to accommodate improved components as they become available, and to give you the benefit of the latest circuit improvements developed in our engineering department. It is therefore important, when ordering parts, to include the following information in your order: Part number, instrument type or number, serial number, and modification number if applicable.

If a part you have ordered has been replaced with a new or improved part, your local Tektronix, Inc. Field Office or representative will contact you concerning any change in part number.

Change information, if any, is located at the rear of this manual.

SPECIAL NOTES AND SYMBOLS

X000	Part first added at this serial number
00X	Part removed after this serial number

ITEM NAME

In the Parts List, an Item Name is separated from the description by a colon (:). Because of space limitations, an Item Name may sometimes appear as incomplete. For further Item Name identification, the U.S. Federal Cataloging Handbook H6-1 can be utilized where possible.

ABBREVIATIONS

ACTR	ACTUATOR	PLSTC	PLASTIC
ASSY	ASSEMBLY	QTZ	QUARTZ
CAP	CAPACITOR	RECP	RECEPTACLE
CER	CERAMIC	RES	RESISTOR
CKT	CIRCUIT	RF	RADIO FREQUENCY
COMP	COMPOSITION	SEL	SELECTED
CONN	CONNECTOR	SEMICOND	SEMICONDUCTOR
ELCTLT	ELECTROLYTIC	SENS	SENSITIVE
ELEC	ELECTRICAL	VAR	VARIABLE
INCAND	INCANDESCENT	WW	WIREWOUND
LED	LIGHT EMITTING DIODE	XFMR	TRANSFORMER
NONWIR	NON WIREWOUND	XTAL	CRYSTAL

CROSS INDEX—MFR. CODE NUMBER TO MANUFACTURER

Mfr. Code	Manufacturer	Address	City, State, Zip
00853	SANGAMO ELECTRIC CO., S. CAROLINA DIV.	P O BOX 128	PICKENS, SC 29671
01121	ALLEN-BRADLEY COMPANY	1201 2ND STREET SOUTH	MILWAUKEE, WI 53204
01295	TEXAS INSTRUMENTS, INC., SEMICONDUCTOR GROUP	P O BOX 5012, 13500 N CENTRAL EXPRESSWAY	DALLAS, TX 75222
02735	RCA CORPORATION, SOLID STATE DIVISION	ROUTE 202	SOMERVILLE, NY 08876
04222	AVX CERAMICS, DIVISION OF AVX CORP.	P O BOX 867, 19TH AVE. SOUTH	MURTLE BEACH, SC 29577
04713	MOTOROLA, INC., SEMICONDUCTOR PROD. DIV.	5005 E MCDOWELL RD,PO BOX 20923	PHOENIX, AZ 85036
05091	TRI-ORDINATE CORPORATION	343 SNYDER AVENUE	BERKELEY HEIGHTS, NJ 07922
07263	FAIRCHILD SEMICONDUCTOR, A DIV. OF FAIRCHILD CAMERA AND INSTRUMENT CORP.	464 ELLIS STREET	MOUNTAIN VIEW, CA 94042
07910	TELEDYNE SEMICONDUCTOR	12515 CHADRON AVE.	HAWTHORNE, CA 90250
08806	GENERAL ELECTRIC CO., MINIATURE LAMP PRODUCTS DEPARTMENT	NELA PARK	CLEVELAND, OH 44112
11237	CTS KEENE, INC.	3230 RIVERSIDE AVE.	PASO ROBLES, CA 93446
12697	CLAROSTAT MFG. CO., INC.	LOWER WASHINGTON STREET	DOVER, NH 03820
14099	SEMTECH CORP.	652 MITCHELL RD.	NEWBURY PARK, CA 91320
15818	TELEDYNE SEMICONDUCTOR	1300 TERRA BELLA AVE.	MOUNTAIN VIEW, CA 94043
19396	IILINOIS TOOL WORKS, INC. PAKTRON DIV.	900 FOLLIN LANE, SE	VIENNA, VA 22180
27014	NATIONAL SEMICONDUCTOR CORP.	2900 SEMICONDUCTOR DR.	SANTA CLARA, CA 95051
27264	MOLEX PRODUCTS CO.	5224 KATRINE AVE.	DOWNERS GROVE, IL 60515
50157	N. L. INDUSTRIES, INC., ELECTRONICS DEPT.	P. O. BOX 787	MUSKEGON, MI 49445
55210	GETTIG ENG. AND MFG. COMPANY	PO BOX 85, OFF ROUTE 45	SPRING MILLS, PA 16875
56289	SPRAGUE ELECTRIC CO.		NORTH ADAMS, MA 01247
71400	BUSSMAN MFG., DIVISION OF MCGRAW-EDISON CO.	2536 W. UNIVERSITY ST.	ST. LOUIS, MO 63107
72982	ERIE TECHNOLOGICAL PRODUCTS, INC.	644 W. 12TH ST.	ERIE, PA 16512
73138	BECKMAN INSTRUMENTS, INC., HELIPOT DIV.	2500 HARBOR BLVD.	FULLERTON, CA 92634
75042	TRW ELECTRONIC COMPONENTS, IRC FIXED RESISTORS, PHILADELPHIA DIVISION	401 N. BROAD ST.	PHILADELPHIA, PA 19108
80009	TEKTRONIX, INC.	P O BOX 500	BEAVERTON, OR 97077
80031	ELECTRA-MIDLAND CORP., MEPCO DIV.	22 COLUMBIA ROAD	MORRISTOWN, NJ 07960
81483	INTERNATIONAL RECTIFIER CORP.	9220 SUNSET BLVD.	LOS ANGELES, CA 90069
82389	SWITCHCRAFT, INC.	5555 N. ELSTON AVE.	CHICAGO, IL 60630
90201	MALLORY CAPACITOR CO., DIV. OF P. R. MALLORY AND CO., INC.	3029 E WASHINGTON STREET P O BOX 372	INDIANAPOLIS, IN 46206
91637	DALE ELECTRONICS, INC.	P. O. BOX 609	COLUMBUS, NE 68601

Ckt No.	Tektronix Part No.	Serial/Model No. Eff	Dscont	Name & Description	Mfr Code	Mfr Part Number
A1[1]	670-3738-00	B010100	B010129	CKT BOARD ASSY:INTERFACE	80009	670-3738-00
A1[1]	670-3738-01	B010130	B010349	CKT BOARD ASSY:INTERFACE	80009	670-3738-01
A1[1]	670-3738-02	B010350	B011359	CKT BOARD ASSY:INTERFACE	80009	670-3738-02
A1[1]	670-3738-04	B011360		CKT BOARD ASSY:INTERFACE	80009	670-3738-04
A1[2]	670-3738-00	B010100	B010129	CKT BOARD ASSY:INTERFACE	80009	670-3738-00
A1[2]	670-3738-01	B010130	B010349	CKT BOARD ASSY:INTERFACE	80009	670-3738-01
A1[2]	670-3738-02	B010350	B011663	CKT BOARD ASSY:INTERFACE	80009	670-3738-02
A1[2]	670-3738-04	B011664		CKT BOARD ASSY:INTERFACE	80009	670-3738-04
A2	670-3980-00			CKT BOARD ASSY:L.V. POWER SUPPLY	80009	670-3980-00
A6[1]	670-3972-00	B010100	B010349	CKT BOARD ASSY:ATTENUATOR CH1	80009	670-3972-00
A6[1]	670-3972-01	B010350	B010799	CKT BOARD ASSY:ATTENUATOR CH1	80009	670-3972-01
A6[1]	670-3972-03	B010800		CKT BOARD ASSY:ATTENUATOR CH1	80009	670-3972-03
A6[2]	670-3972-00	B010100	B010349	CKT BOARD ASSY:ATTENUATOR CH1	80009	670-3972-00
A6[2]	670-3972-01	B010350	B010949	CKT BOARD ASSY:ATTENUATOR CH1	80009	670-3972-01
A6[2]	670-3972-03	B010950		CKT BOARD ASSY:ATTENUATOR CH1	80009	670-3972-03
A7[1]	670-3973-00	B010100	B010349	CKT BOARD ASSY:ATTENUATOR CH2	80009	670-3973-00
A7[1]	670-3973-01	B010350	B010799	CKT BOARD ASSY:ATTENUATOR CH2	80009	670-3973-01
A7[1]	670-3973-03	B010800		CKT BOARD ASSY:ATTENUATOR CH2	80009	670-3973-03
A7[2]	670-3973-00	B010100	B010349	CKT BOARD ASSY:ATTENUATOR CH2	80009	670-3973-00
A7[2]	670-3973-01	B010350	B010949	CKT BOARD ASSY:ATTENUATOR CH2	80009	670-3973-01
A7[2]	670-3973-03	B010950		CKT BOARD ASSY:ATTENUATOR CH2	80009	670-3973-03
A8[1]	670-3736-00	B010100	B010415	CKT BOARD ASSY:VERTICAL	80009	670-3736-00
A8[1]	670-3736-01	B010416	B010724	CKT BOARD ASSY:VERTICAL	80009	670-3736-01
A8[1]	670-3736-02	B010725		CKT BOARD ASSY:VERTICAL	80009	670-3736-02
A8[2]	670-3736-00	B010100	B010431	CKT BOARD ASSY:VERTICAL	80009	670-3736-00
A8[2]	670-3736-01	B010432	B010749	CKT BOARD ASSY:VERTICAL	80009	670-3736-01
A8[2]	670-3736-02	B010750		CKT BOARD ASSY:VERTICAL	80009	670-3736-02
A11[1]	670-4230-00	B010100	B011081	CKT BOARD ASSY:TRIGGER	80009	670-4230-00
A11[1]	670-4230-01	B011082		CKT BOARD ASSY:TRIGGER	80009	670-4230-01
A11[2]	670-4230-00	B010100	B011303	CKT BOARD ASSY:TRIGGER	80009	670-4230-00
A11[2]	670-4230-01	B011304		CKT BOARD ASSY:TRIGGER	80009	670-4230-01
A12[1]	670-4118-00	B010100	B010374	CKT BOARD ASSY:HORIZONTAL	80009	670-4118-00
A12[1]	670-4118-01	B010375	B010734	CKT BOARD ASSY:HORIZONTAL	80009	670-4118-01
A12[1]	670-4118-02	B010735	B011793	CKT BOARD ASSY:HORIZONTAL	80009	670-4118-02
A12[1]	670-4118-03	B011794		CKT BOARD ASSY:HORIZONTAL	80009	670-4118-03
A12[2]	670-3737-00	B010100	B010449	CKT BOARD ASSY:HORIZONTAL	80009	670-3737-00
A12[2]	670-3737-01	B010450	B010769	CKT BOARD ASSY:HORIZONTAL	80009	670-3737-01
A12[2]	670-3737-02	B010770	B012318	CKT BOARD ASSY:HORIZONTAL	80009	670-3737-02
A12[2]	670-3737-03	B012319		CKT BOARD ASSY:HORIZONTAL	80009	670-3737-03
A13[1,3]	672-0551-00			CKT BOARD ASSY:TIMING W/ROTARY SW	80009	672-0551-00
A13 A14 [2,4]	672-0533-00			CKT BOARD ASSY:TIMING W/ROTARY SW	80009	672-0533-00
C24	281-0773-00			CAP.,FXD,CER DI:0.01UF,10%,100V	72982	8005H9AADW5R103K
C114	281-0207-00			CAP.,VAR,PLSTC:2-18PF,100V	80031	HT10EA/218
C115	283-0198-00			CAP.,FXD,CER DI:0.22UF,20%,50V	72982	8131N075 E224M
C118	281-0207-00			CAP.,VAR,PLSTC:2-18PF,100V	80031	HT10EA/218
C119	281-0768-00			CAP.,FXD,CER DI:470PF,20%,100V	72982	314022X5P0471M
C124	281-0762-00			CAP.,FXD,CER DI:27PF,20%,100V	72982	390-049X5P0270M
C129	281-0768-00			CAP.,FXD,CER DI:470PF,20%,100V	72982	314022X5P0471M
C412	281-0775-00			CAP.,FXD,CER DI:0.1UF,20%,50V	72982	8005H9AABZ5U104M
C423[1]	281-0627-00	B010100	B011561	CAP.,FXD,CER DI:1PF,+/-0.25PF,500V	72982	301-000C0K0109C
C423[1]	281-0661-00	B011562		CAP.,FXD,CER DI:0.8PF,+/-0.1PF,500V	72982	301-000C0K0808B

[1]T932 only
[2]T935 only
[3]Furnished as a unit with S2250
[4]Furnished as a unit with S2550A,B

Ckt No.	Tektronix Part No.	Serial/Model No. Eff	Dscont	Name & Description	Mfr Code	Mfr Part Number
C423[1]	281-0627-00	B010100	B012062	CAP.,FXD,CER DI:1PF,+/-0.25PF,500V	72982	301-000C0K0109C
C423[1]	281-0661-00	B012063		CAP.,FXD,CER DI:0.8PF,+/-0.1PF,500V	72982	301-000C0K0808B
C424	281-0775-00			CAP.,FXD,CER DI:0.1UF,20%,50V	72982	8005H9AABZ5U104M
C425	281-0775-00			CAP.,FXD,CER DI:0.1UF,20%,50V	72982	8005H9AABZ5U104M
C433	285-1099-00			CAP.,FXD,PLSTC:0.047UF,20%,200V	19396	PT605C473M
C434	285-1099-00			CAP.,FXD,PLSTC:0.047UF,20%,200V	19396	PT605C473M
C435	285-1099-00			CAP.,FXD,PLSTC:0.047UF,20%,200V	19396	PT605C473M
C443	290-0297-00			CAP.,FXD,ELCTLT:39UF,10%,10V	56289	150D396X9010B2
C445	281-0775-00			CAP.,FXD,CER DI:0.1UF,20%,50V	72982	8005H9AABZ5U104M
C455	281-0773-00			CAP.,FXD,CER DI:0.01UF,10%,100V	72982	8005H9AADW5R103K
C458	290-0405-00			CAP.,FXD,ELCTLT:10UF,+50-10%,150V	56289	30D106F150DD4
C462	283-0034-00			CAP.,FXD,CER DI:0.005UF,20%,4000V	56289	41C107A
C463	283-0034-00			CAP.,FXD,CER DI:0.005UF,20%,4000V	56289	41C107A
C464	283-0034-00			CAP.,FXD,CER DI:0.005UF,20%,4000V	56289	41C107A
C465	283-0034-00			CAP.,FXD,CER DI:0.005UF,20%,4000V	56289	41C107A
C466	283-0034-00			CAP.,FXD,CER DI:0.005UF,20%,4000V	56289	41C107A
C476	281-0773-00			CAP.,FXD,CER DI:0.01UF,10%,100V	72982	8005H9AADW5R103K
C477	281-0773-00			CAP.,FXD,CER DI:0.01UF,10%,100V	72982	8005H9AADW5R103K
C478	281-0773-00			CAP.,FXD,CER DI:0.01UF,10%,100V	72982	8005H9AADW5R103K
C722	290-0750-00			CAP.,FXD,ELCTLT:100UF,+50-10%,160V	56289	D76244
C738	290-0744-00			CAP.,FXD,ELCTLT:3.3UF,+50-10%,160V	90201	TT3R3U160B0L3P
C742	290-0751-00			CAP.,FXD,ELCTLT:2200UF,+50-10%,16V	56289	D76245
C743	290-0751-00			CAP.,FXD,ELCTLT:2200UF,+50-10%,16V	56289	D76245
C746	281-0773-00			CAP.,FXD,CER DI:0.01UF,10%,100V	72982	8005H9AADW5R103K
C756	281-0773-00			CAP.,FXD,CER DI:0.01UF,10%,100V	72982	8005H9AADW5R103K
C758	290-0107-00			CAP.,FXD,ELCTLT:25UF,+75-10%,25V	56289	30D256G025DB9
C763	281-0773-00			CAP.,FXD,CER DI:0.01UF,10%,100V	72982	8005H9AADW5R103K
C774	281-0773-00			CAP.,FXD,CER DI:0.01UF,10%,100V	72982	8005H9AADW5R103K
C778	290-0107-00			CAP.,FXD,ELCTLT:25UF,+75-10%,25V	56289	30D256G025DB9
C796	290-0164-00			CAP.,FXD,ELCTLT:1UF,+50-10%,150V	56289	30D105F150BA2
C2101	281-0651-00			CAP.,FXD,CER DI:47PF,5%,200V	72982	374-001T2H0470J
C2102	281-0775-00			CAP.,FXD,CER DI:0.1UF,20%,50V	72982	8005H9AABZ5U104M
C2103	281-0528-00			CAP.,FXD,CER DI:82PF,+/-8.2PF,500V	72982	301-000U2M0820K
C2106	281-0775-00			CAP.,FXD,CER DI:0.1UF,20%,50V	72982	8005H9AABZ5U104M
C2107	281-0797-00			CAP.,FXD,CER DI:15PF,10%,100V	72982	8005-D-C0G-150K
C2113	281-0763-00			CAP.,FXD,CER DI:47PF,10%,100V	72982	390049X5P0470K
C2123	281-0773-00			CAP.,FXD,CER DI:0.01UF,10%,100V	72982	8005H9AADW5R103K
C2125	281-0775-00			CAP.,FXD,CER DI:0.1UF,20%,50V	72982	8005H9AABZ5U104M
C2128	281-0773-00			CAP.,FXD,CER DI:0.01UF,10%,100V	72982	8005H9AADW5R103K
C2132	290-0297-00			CAP.,FXD,ELCTLT:39UF,10%,10V	56289	150D396X9010B2
C2144	281-0775-00			CAP.,FXD,CER DI:0.1UF,20%,50V	72982	8005H9AABZ5U104M
C2149	290-0183-00			CAP.,FXD,ELCTLT:1UF,10%,35V	56289	162D105X9035CD2
C2156	281-0775-00			CAP.,FXD,CER DI:0.1UF,20%,50V	72982	8005H9AABZ5U104M
C2162	290-0135-00			CAP.,FXD,ELCTLT:15UF,20%,20V	56289	150D156X0020B2
C2163	281-0763-00			CAP.,FXD,CER DI:47PF,10%,100V	72982	390049X5P0470K
C2166	290-0183-00			CAP.,FXD,ELCTLT:1UF,10%,35V	56289	162D105X9035CD2
C2171	290-0183-00			CAP.,FXD,ELCTLT:1UF,10%,35V	56289	162D105X9035CD2
C2174	281-0773-00			CAP.,FXD,CER DI:0.01UF,10%,100V	72982	8005H9AADW5R103K
C2175	283-0081-00			CAP.,FXD,CER DI:0.1UF,+80-20%,25V	56289	36C600
C2176	281-0774-00			CAP.,FXD,CER DI:0.022UF,20%,100V	72982	8045A9ABDZ2U223M
C2181	281-0775-00			CAP.,FXD,CER DI:0.1UF,20%,50V	72982	8005H9AABZ5U104M
C2212	281-0775-00			CAP.,FXD,CER DI:0.1UF,20%,50V	72982	8005H9AABZ5U104M
C2226	290-0135-00			CAP.,FXD,ELCTLT:15UF,20%,20V	56289	150D156X0020B2

[1]T935 only

Ckt No.	Tektronix Part No.	Serial/Model No. Eff	Dscont	Name & Description	Mfr Code	Mfr Part Number
C2233	283-0706-00			CAP.,FXD,MICA D:91PF,+/-1PF,500V	00853	D15-5E910F0
C2234	281-0775-00			CAP.,FXD,CER DI:0.1UF,20%,50V	72982	8005H9AABZ5U104M
C2235	281-0216-00			CAP.,VAR,CER DI:0.8-6.8PF,400V	80031	2222-801-96024
C2236	290-0135-00			CAP.,FXD,ELCTLT:15UF,20%,20V	56289	150D156X0020B2
C2245	281-0759-00			CAP.,FXD,CER DI:22PF,10%,100V	72982	390-049X5P0220K
C2246[1]	281-0763-00	B010100	B010179X	CAP.,FXD,CER DI:47PF,10%,100V	72982	390049X5P0470K
C2246[2]	281-0763-00	B010100	B010179X	CAP.,FXD,CER DI:47PF,10%,100V	72982	390049X5P0470K
C2252A-D[1]	295-0183-00			CAP.,SET,MTCHD:1.0UF,0.01UF,1.0UF,0.01UF	80009	295-0183-00
C2252A,B[2]	295-0179-00			CAP.,SET,MTCHD:0.01UF,1.0UF,1%	80009	295-0179-00
C2274	281-0773-00			CAP.,FXD,CER DI:0.01UF,10%,100V	72982	8005H9AADW5R103K
C2275	290-0167-00			CAP.,FXD,ELCTLT:10UF,20%,15V	56289	150D106X0015B2
C2276	281-0775-00			CAP.,FXD,CER DI:0.1UF,20%,50V	72982	8005H9AABZ5U104M
C2278	281-0758-00			CAP.,FXD,CER DI:15PF,20%,100V	72982	314022C0G0150M
C2317	281-0775-00			CAP.,FXD,CER DI:0.1UF,20%,50V	72982	8005H9AABZ5U104M
C2325	281-0775-00			CAP.,FXD,CER DI:0.1UF,20%,50V	72982	8005H9AABZ5U104M
C2327	281-0775-00			CAP.,FXD,CER DI:0.1UF,20%,50V	72982	8005H9AABZ5U104M
C2337[1]	283-0129-00	B010100	B010449	CAP.,FXD,CER DI:0.56UF,20%,100V	56289	725C7
C2337[1]	290-0480-00	B010450		CAP.,FXD,ELCTLT:0.5UF,+50-10%,200V	80009	290-0480-00
C2337[2]	283-0129-00	B010100	B010499	CAP.,FXD,CER DI:0.56UF,20%,100V	56289	725C7
C2337[2]	290-0480-00	B010500		CAP.,FXD,ELCTLT:0.5UF,+50-10%,200V	80009	290-0480-00
C2517[2]	290-0135-00	XB010180		CAP.,FXD,ELCTLT:15UF,20%,20V	56289	150D156X0020B2
C2521[2]	281-0758-00			CAP.,FXD,CER DI:15PF,20%,100V	72982	314022C0G0150M
C2525[2]	281-0763-00			CAP.,FXD,CER DI:47PF,10%,100V	72982	390049X5P0470K
C2533[2]	281-0759-00			CAP.,FXD,CER DI:22PF,10%,100V	72982	390-049X5P0220K
C2535[2]	281-0216-00			CAP.,VAR,CER DI:0.8-6.8PF,400V	80031	2222-801-96024
C2536[2]	283-0632-00			CAP.,FXD,MICA D:87PF,1%,100V	00853	D151E870F0
C2539[2]	290-0135-00			CAP.,FXD,ELCTLT:15UF,20%,20V	56289	150D156X0020B2
C2544[2]	281-0759-00			CAP.,FXD,CER DI:22PF,10%,100V	72982	390-049X5P0220K
C2546[2]	281-0763-00	B010100	B010179X	CAP.,FXD,CER DI:47PF,10%,100V	72982	390049X5P0470K
C2548[2]	281-0763-00			CAP.,FXD,CER DI:47PF,10%,100V	72982	390049X5P0470K
C4101	281-0541-00			CAP.,FXD,CER DI:6.8PF,10%,500V	72982	301-000C0H0689D
C4102	285-1124-00			CAP.,FXD,PLSTC:0.022UF,20%,400V	19396	PP721E223M
C4104	281-0207-00			CAP.,VAR,PLSTC:2-18PF,100V	80031	HT10EA/218
C4105	281-0214-00			CAP.,VAR,CER DI:0.5-3PF,400V	80031	2222-801-96138
C4106	283-0213-00			CAP.,FXD,CER DI:300PF,5%,100V	72982	8121N130A301J
C4113	281-0207-00			CAP.,VAR,PLSTC:2-18PF,100V	80031	HT10EA/218
C4114[1]	281-0214-00	B010100	B010599	CAP.,VAR,CER DI:0.5-3PF,400V	80031	2222-801-96138
C4114[1]	281-0220-00	B010600		CAP.,VAR,CER DI:1-5.5PF,400V	80031	2222-801-96139
C4114[2]	281-0214-00	B010100	B010799	CAP.,VAR,CER DI:0.5-3PF,400V	80031	2222-801-96138
C4114[2]	281-0220-00	B010800		CAP.,VAR,CER DI:1-5.5PF,400V	80031	2222-801-96139
C4116	281-0759-00			CAP.,FXD,CER DI:22PF,10%,100V	72982	390-049X5P0220K
C4122	281-0773-00	B010100	B010329	CAP.,FXD,CER DI:0.01UF,10%,100V	72982	8005H9AADW5R103K
C4122	283-0002-00	B010330		CAP.,FXD,CER DI:0.01UF,+80-20%,500V	72982	811-546E103Z
C4143	281-0763-00			CAP.,FXD,CER DI:47PF,10%,100V	72982	390049X5P0470K
C4154	281-0204-00			CAP.,VAR,PLSTC:2-22PF,100V	80031	C010EA-20E
C4156	281-0546-00			CAP.,FXD,CER DI:330PF,10%,500V	04222	7001-1380
C4158	281-0788-00			CAP.,FXD,CER DI:470PF,10%,100V	72982	8005H9AADW5R471K
C4166	283-0119-00			CAP.,FXD,CER DI:2200PF,5%,200V	72982	855-535B222J
C4168	281-0788-00			CAP.,FXD,CER DI:470PF,10%,100V	72982	8005H9AADW5R471K
C4177	281-0788-00			CAP.,FXD,CER DI:470PF,10%,100V	72982	8005H9AADW5R471K
C4182[1]	281-0759-00	B010100	B010724X	CAP.,FXD,CER DI:22PF,10%,100V	72982	390-049X5P0220K
C4182[2]	281-0759-00	B010100	B010749X	CAP.,FXD,CER DI:22PF,10%,100V	72982	390-049X5P0220K
C4187	281-0788-00			CAP.,FXD,CER DI:470PF,10%,100V	72982	8005H9AADW5R471K

[1] T932 only
[2] T935 only

Ckt No.	Tektronix Part No.	Serial/Model No. Eff	Dscont	Name & Description	Mfr Code	Mfr Part Number
C4196	281-0792-00			CAP.,FXD,CER DI:82PF,10%,100V	72982	390049X5P0820K
C4201	281-0541-00			CAP.,FXD,CER DI:6.8PF,10%,500V	72982	301-000C0H0689D
C4202	285-1124-00			CAP.,FXD,PLSTC:0.022UF,20%,400V	19396	PP721E223M
C4204	281-0207-00			CAP.,VAR,PLSTC:2-18PF,100V	80031	HT10EA/218
C4205	281-0214-00			CAP.,VAR,CER DI:0.5-3PF,400V	80031	2222-801-96138
C4206	283-0213-00			CAP.,FXD,CER DI:300PF,5%,100V	72982	8121N130A301J
C4213	281-0207-00			CAP.,VAR,PLSTC:2-18PF,100V	80031	HT10EA/218
C4214[1]	281-0214-00	B010100	B010599	CAP.,VAR,CER DI:0.5-3PF,400V	80031	2222-801-96138
C4214[1]	281-0220-00	B010600		CAP.,VAR,CER DI:1-5.5PF,400V	80031	2222-801-96139
C4214[2]	281-0214-00	B010100	B010799	CAP.,VAR,CER DI:0.5-3PF,400V	80031	2222-801-96138
C4214[2]	281-0220-00	B010800		CAP.,VAR,CER DI:1-5.5PF,400V	80031	2222-801-96139
C4216	281-0759-00			CAP.,FXD,CER DI:22PF,10%,100V	72982	390-049X5P0220K
C4222	281-0773-00	B010100	B010329	CAP.,FXD,CER DI:0.01UF,10%,100V	72982	8005H9AADW5R103K
C4222	283-0002-00	B010330		CAP.,FXD,CER DI:0.01UF,+80-20%,500V	72982	811-546E103Z
C4233	281-0786-00			CAP.,FXD,CER DI:150PF,10%,100V	72982	390049X5P0151K
C4243	281-0763-00			CAP.,FXD,CER DI:47PF,10%,100V	72982	390049X5P0470K
C4256	281-0546-00			CAP.,FXD,CER DI:330PF,10%,500V	04222	7001-1380
C4258	281-0788-00			CAP.,FXD,CER DI:470PF,10%,100V	72982	8005H9AADW5R471K
C4266	283-0119-00			CAP.,FXD,CER DI:2200PF,5%,200V	72982	855-535B222J
C4268	281-0788-00			CAP.,FXD,CER DI:470PF,10%,100V	72982	8005H9AADW5R471K
C4277	281-0788-00			CAP.,FXD,CER DI:470PF,10%,100V	72982	8005H9AADW5R471K
C4282[1]	281-0759-00	B010100	B010724X	CAP.,FXD,CER DI:22PF,10%,100V	72982	390-049X5P0220K
C4282[2]	281-0759-00	B010100	B010749X	CAP.,FXD,CER DI:22PF,10%,100V	72982	390-049X5P0220K
C4287	281-0788-00			CAP.,FXD,CER DI:470PF,10%,100V	72982	8005H9AADW5R471K
C4296	281-0792-00			CAP.,FXD,CER DI:82PF,10%,100V	72982	390049X5P0820K
C4302	281-0763-00			CAP.,FXD,CER DI:47PF,10%,100V	72982	390049X5P0470K
C4306	281-0775-00			CAP.,FXD,CER DI:0.1UF,20%,50V	72982	8005H9AABZ5U104M
C4307	281-0763-00			CAP.,FXD,CER DI:47PF,10%,100V	72982	390049X5P0470K
C4308	281-0763-00			CAP.,FXD,CER DI:47PF,10%,100V	72982	390049X5P0470K
C4312	281-0773-00			CAP.,FXD,CER DI:0.01UF,10%,100V	72982	8005H9AADW5R103K
C4315	281-0770-00			CAP.,FXD,CER DI:0.001UF,20%,100V	72982	314022X5P0102M
C4324	281-0775-00			CAP.,FXD,CER DI:0.1UF,20%,50V	72982	8005H9AABZ5U104M
C4331	281-0773-00			CAP.,FXD,CER DI:0.01UF,10%,100V	72982	8005H9AADW5R103K
C4332	281-0773-00			CAP.,FXD,CER DI:0.01UF,10%,100V	72982	8005H9AADW5R103K
C4334[1]	281-0773-00	XB010725		CAP.,FXD,CER DI:0.01UF,10%,100V	72982	8005H9AADW5R103K
C4334[2]	281-0773-00	XB010750		CAP.,FXD,CER DI:0.01UF,10%,100V	72982	8005H9AADW5R103K
C4355[1]	281-0786-00	XB010725		CAP.,FXD,CER DI:150PF,10%,100V	72982	390049X5P0151K
C4355[2]	281-0786-00	XB010750		CAP.,FXD,CER DI:150PF,10%,100V	72982	390049X5P0151K
C4368	283-0111-00			CAP.,FXD,CER DI:0.1UF,20%,50V	72982	8121-N088Z5U104M
C4375	281-0788-00			CAP.,FXD,CER DI:470PF,10%,100V	72982	8005H9AADW5R471K
C4378	281-0762-00			CAP.,FXD,CER DI:27PF,20%,100V	72982	390-049X5P0270M
C4385	281-0788-00			CAP.,FXD,CER DI:470PF,10%,100V	72982	8005H9AADW5R471K
C4386	283-0111-00			CAP.,FXD,CER DI:0.1UF,20%,50V	72982	8121-N088Z5U104M
C4388	281-0762-00			CAP.,FXD,CER DI:27PF,20%,100V	72982	390-049X5P0270M
C4395	281-0600-00			CAP.,FXD,CER DI:35PF,10%,500V	72982	308-000C0G0350K
C4396	281-0207-00			CAP.,VAR,PLSTC:2-18PF,100V	80031	HT10EA/218
C4397	281-0207-00			CAP.,VAR,PLSTC:2-18PF,100V	80031	HT10EA/218
C4398	281-0786-00			CAP.,FXD,CER DI:150PF,10%,100V	72982	390049X5P0151K
C4410	283-0177-00			CAP.,FXD,CER DI:1UF,+80-20%,25V	72982	8131N039 E 105Z
C4411	283-0111-00			CAP.,FXD,CER DI:0.1UF,20%,50V	72982	8121-N088Z5U104M
C4416	283-0111-00			CAP.,FXD,CER DI:0.1UF,20%,50V	72982	8121-N088Z5U104M
C4417	283-0177-00			CAP.,FXD,CER DI:1UF,+80-20%,25V	72982	8131N039 E 105Z

[1] T935 only
[2] T932 only

Ckt No.	Tektronix Part No.	Serial/Model No. Eff	Dscont	Name & Description	Mfr Code	Mfr Part Number
CR26	152-0141-02			SEMICOND DEVICE:SILICON,30V,150MA	07910	1N4152
CR27	152-0141-02			SEMICOND DEVICE:SILICON,30V,150MA	07910	1N4152
CR416	152-0075-00			SEMICOND DEVICE:GE,25V,40MA	80009	152-0075-00
CR418	152-0141-02			SEMICOND DEVICE:SILICON,30V,150MA	07910	1N4152
CR437	152-0061-00			SEMICOND DEVICE:SILICON,175V,100MA	80009	152-0061-00
CR443	152-0141-02			SEMICOND DEVICE:SILICON,30V,150MA	07910	1N4152
CR463	152-0639-00			SEMICOND DEVICE:RECT,SI,10KV,10MA	14099	SEF100
CR465	152-0639-00			SEMICOND DEVICE:RECT,SI,10KV,10MA	14099	SEF100
CR721	152-0066-03			SEMICOND DEVICE:RECT,SI,400V,1A	80009	152-0066-03
CR722	152-0066-03			SEMICOND DEVICE:RECT,SI,400V,1A	80009	152-0066-03
CR723	152-0066-03			SEMICOND DEVICE:RECT,SI,400V,1A	80009	152-0066-03
CR724	152-0066-03			SEMICOND DEVICE:RECT,SI,400V,1A	80009	152-0066-03
CR732	152-0066-03			SEMICOND DEVICE:RECT,SI,400V,1A	80009	152-0066-03
CR734	152-0066-03			SEMICOND DEVICE:RECT,SI,400V,1A	80009	152-0066-03
CR737	152-0141-02			SEMICOND DEVICE:SILICON,30V,150MA	07910	1N4152
CR738	152-0066-03			SEMICOND DEVICE:RECT,SI,400V,1A	80009	152-0066-03
CR741	152-0066-03			SEMICOND DEVICE:RECT,SI,400V,1A	80009	152-0066-03
CR742	152-0066-03			SEMICOND DEVICE:RECT,SI,400V,1A	80009	152-0066-03
CR743	152-0066-03			SEMICOND DEVICE:RECT,SI,400V,1A	80009	152-0066-03
CR744	152-0066-03			SEMICOND DEVICE:RECT,SI,400V,1A	80009	152-0066-03
CR758	152-0066-03			SEMICOND DEVICE:RECT,SI,400V,1A	80009	152-0066-03
CR764	152-0141-02			SEMICOND DEVICE:SILICON,30V,150MA	07910	1N4152
CR765	152-0141-02			SEMICOND DEVICE:SILICON,30V,150MA	07910	1N4152
CR766	152-0141-02			SEMICOND DEVICE:SILICON,30V,150MA	07910	1N4152
CR767	152-0141-02			SEMICOND DEVICE:SILICON,30V,150MA	07910	1N4152
CR778	152-0066-03			SEMICOND DEVICE:RECT,SI,400V,1A	80009	152-0066-03
CR2103	152-0141-02			SEMICOND DEVICE:SILICON,30V,150MA	07910	1N4152
CR2108	152-0141-02			SEMICOND DEVICE:SILICON,30V,150MA	07910	1N4152
CR2112	152-0141-02			SEMICOND DEVICE:SILICON,30V,150MA	07910	1N4152
CR2115	152-0141-02			SEMICOND DEVICE:SILICON,30V,150MA	07910	1N4152
CR2124	152-0141-02			SEMICOND DEVICE:SILICON,30V,150MA	07910	1N4152
CR2181	152-0141-02			SEMICOND DEVICE:SILICON,30V,150MA	07910	1N4152
CR2182	152-0141-02			SEMICOND DEVICE:SILICON,30V,150MA	07910	1N4152
CR2183	152-0141-02			SEMICOND DEVICE:SILICON,30V,150MA	07910	1N4152
CR2185	152-0141-02			SEMICOND DEVICE:SILICON,30V,150MA	07910	1N4152
CR2227	152-0141-02			SEMICOND DEVICE:SILICON,30V,150MA	07910	1N4152
CR2233	152-0141-02			SEMICOND DEVICE:SILICON,30V,150MA	07910	1N4152
CR2234[1]	152-0141-02	B010100	B010134	SEMICOND DEVICE:SILICON,30V,150MA	07910	1N4152
CR2234[1]	152-0245-00	B010135		SEMICOND DEVICE:SILICON,10NA AT 5V	80009	152-0245-00
CR2234[2]	152-0141-02	B010100	B010129	SEMICOND DEVICE:SILICON,30V,150MA	07910	1N4152
CR2234[2]	152-0245-00	B010130		SEMICOND DEVICE:SILICON,10NA AT 5V	80009	152-0245-00
CR2317	152-0141-02			SEMICOND DEVICE:SILICON,30V,150MA	07910	1N4152
CR2326	152-0141-02			SEMICOND DEVICE:SILICON,30V,150MA	07910	1N4152
CR2331	152-0075-00			SEMICOND DEVICE:GE,25V,40MA	80009	152-0075-00
CR2332	152-0075-00			SEMICOND DEVICE:GE,25V,40MA	80009	152-0075-00
CR2334	152-0574-00			SEMICOND DEVICE:SILICON,120V,0.15A	80009	152-0574-00
CR2342	152-0141-02			SEMICOND DEVICE:SILICON,30V,150MA	07910	1N4152
CR2356	152-0141-02			SEMICOND DEVICE:SILICON,30V,150MA	07910	1N4152
CR2514[2]	152-0141-02			SEMICOND DEVICE:SILICON,30V,150MA	07910	1N4152
CR2516[2]	152-0141-02			SEMICOND DEVICE:SILICON,30V,150MA	07910	1N4152
CR2535[2]	152-0141-02			SEMICOND DEVICE:SILICON,30V,150MA	07910	1N4152
CR2536[2]	152-0141-02			SEMICOND DEVICE:SILICON,30V,150MA	07910	1N4152
CR4122	152-0246-00			SEMICOND DEVICE:SILICON,400PIV,200MA	07910	CD12676

[1]T932 only
[2]T935 only

Ckt No.	Tektronix Part No.	Serial/Model No. Eff	Dscont	Name & Description	Mfr Code	Mfr Part Number
CR4222	152-0246-00			SEMICOND DEVICE:SILICON,400PIV,200MA	07910	CD12676
CR4331	152-0141-02			SEMICOND DEVICE:SILICON,30V,150MA	07910	1N4152
CR4332	152-0141-02			SEMICOND DEVICE:SILICON,30V,150MA	07910	1N4152
CR4335	152-0141-02			SEMICOND DEVICE:SILICON,30V,150MA	07910	1N4152
CR4336	152-0141-02			SEMICOND DEVICE:SILICON,30V,150MA	07910	1N4152
CR4338	152-0141-02			SEMICOND DEVICE:SILICON,30V,150MA	07910	1N4152
CR4346	152-0141-02			SEMICOND DEVICE:SILICON,30V,150MA	07910	1N4152
CR4347	152-0141-02			SEMICOND DEVICE:SILICON,30V,150MA	07910	1N4152
CR4348	152-0141-02			SEMICOND DEVICE:SILICON,30V,150MA	07910	1N4152
CR4349	152-0141-02			SEMICOND DEVICE:SILICON,30V,150MA	07910	1N4152
CR4355	152-0141-02			SEMICOND DEVICE:SILICON,30V,150MA	07910	1N4152
CR4357	152-0141-02			SEMICOND DEVICE:SILICON,30V,150MA	07910	1N4152
CR4358	152-0141-02			SEMICOND DEVICE:SILICON,30V,150MA	07910	1N4152
CR4359	152-0141-02			SEMICOND DEVICE:SILICON,30V,150MA	07910	1N4152
DL4380	119-0703-00			DELAY LINE,ELEC:120 NS	80009	119-0703-00
DS463	150-0002-00			LAMP,GLOW:0.5 MA 60/125V	08806	NE2T-A1AT
DS465	150-0002-00			LAMP,GLOW:0.5 MA 60/125V	08806	NE2T-A1AT
DS796	150-0035-00			LAMP,GLOW:90V,0.3MA	08806	A1D-T
F700[1]	159-0042-00			FUSE,CARTRIDGE:3AG,0.75A,250V,FAST-BLOW	71400	AGC 3/4
F700[1]	159-0029-00			FUSE,CARTRIDGE:3AG,0.3A,250V,SLOW-BLOW	71400	MDL3/10
F722	159-0051-00			FUSE,CARTRIDGE:3AG,0.062A,250V,20 SEC	71400	MDL1-16
J2	131-1792-00			CONTACT ASSY,EL:12 MALE CONTACT,FLAT WAFER	27264	09-70-2121
J4	131-1795-00			CONNECTOR,RCPT,:12 FEMALE CONTACT,RT-ANGLE	27264	09-62-3121
J7	131-1749-00			CONNECTOR,RCPT,:10 FEMALE CONTACT	27264	09-52-3101
J419	131-0955-00			CONNECTOR,RCPT,:BNC,FEMALE,W/HARDWARE	05091	31-279
J2100	131-1802-00			CONNECTOR,RCPT,:15 CONTACTS	80009	131-1802-00
J2110	131-0106-02			CONNECTOR,RCPT,:BNC	80009	131-0106-02
J2250	131-1801-00			CONNECTOR,RCPT,:9 CONTACTS	80009	131-1801-00
J2260	131-1802-00			CONNECTOR,RCPT,:15 CONTACTS	80009	131-1802-00
J2550[3]	131-1801-00			CONNECTOR,RCPT,:9 CONTACTS	80009	131-1801-00
J4100	131-0955-00			CONNECTOR,RCPT,:BNC,FEMALE,W/HARDWARE	05091	31-279
J4200	131-0955-00			CONNECTOR,RCPT,:BNC,FEMALE,W/HARDWARE	05091	31-279
L470	108-0819-00			COIL,TUBE DEFLE:X-Y ALIGNMENT	80009	108-0819-00
L472	108-0818-00			COIL,TUBE DEFLE:TRACE ROTATION	80009	108-0818-00
Q112	151-0199-00			TRANSISTOR:SILICON,PNP	27014	ST65038
Q122	151-0199-00			TRANSISTOR:SILICON,PNP	27014	ST65038
Q134	151-0127-00			TRANSISTOR:SILICON,NPN	80009	151-0127-00
Q136	151-0127-00			TRANSISTOR:SILICON,NPN	80009	151-0127-00
Q144	151-0127-00			TRANSISTOR:SILICON,NPN	80009	151-0127-00
Q146	151-0127-00			TRANSISTOR:SILICON,NPN	80009	151-0127-00
Q416	151-0190-06			TRANSISTOR:SILICON,NPN	80009	151-0190-06
Q424	151-0190-06			TRANSISTOR:SILICON,NPN	80009	151-0190-06
Q426	151-0347-00			TRANSISTOR:SILICON,NPN	80009	151-0347-00
Q434	151-0350-00			TRANSISTOR:SILICON,PNP	80009	151-0350-00
Q446	151-0126-00			TRANSISTOR:SILICON,NPN	15818	2N2484
Q454	151-0188-00			TRANSISTOR:SILICON,PNP	01295	2N3906
Q458	151-0423-00			TRANSISTOR:SILICON,NPN	01295	TIP50
Q722	151-0347-00			TRANSISTOR:SILICON,NPN	80009	151-0347-00
Q726	151-0347-00			TRANSISTOR:SILICON,NPN	80009	151-0347-00
Q734	151-0347-00			TRANSISTOR:SILICON,NPN	80009	151-0347-00

[1]For 100 to 120 volt operation
[2]For 220 to 240 volt operation
[3]T935 only

Ckt No.	Tektronix Part No.	Serial/Model No. Eff	Dscont	Name & Description	Mfr Code	Mfr Part Number
Q736	151-0497-00			TRANSISTOR:SILICON,NPN	02735	RCA47
Q752	151-0302-00			TRANSISTOR:SILICON,NPN	04713	2N2222A
Q754	151-0302-00			TRANSISTOR:SILICON,NPN	04713	2N2222A
Q756	151-0478-00			TRANSISTOR:SILICON,NPN	01295	TIP31A
Q772	151-0301-00			TRANSISTOR:SILICON,PNP	04713	2N2907A
Q774	151-0301-00			TRANSISTOR:SILICON,PNP	04713	2N2907A
Q776	151-0478-00			TRANSISTOR:SILICON,NPN	01295	TIP31A
Q792	151-0224-00			TRANSISTOR:SILICON,NPN	07263	2N3904
Q796	151-0347-00			TRANSISTOR:SILICON,NPN	80009	151-0347-00
Q2104	151-1042-02			TRANSISTOR:MATCHED PAIR FET	80009	151-1042-02
Q2106						
Q2108	151-0188-00			TRANSISTOR:SILICON,PNP	01295	2N3906
Q2122	151-0190-06			TRANSISTOR:SILICON,NPN	80009	151-0190-06
Q2124	151-0190-06			TRANSISTOR:SILICON,NPN	80009	151-0190-06
Q2128	151-0188-00			TRANSISTOR:SILICON,PNP	01295	2N3906
Q2134	151-0188-00			TRANSISTOR:SILICON,PNP	01295	2N3906
Q2136	151-0188-00			TRANSISTOR:SILICON,PNP	01295	2N3906
Q2142	151-0224-00			TRANSISTOR:SILICON,NPN	07263	2N3904
Q2144	151-0224-00			TRANSISTOR:SILICON,NPN	07263	2N3904
Q2152	151-0188-00			TRANSISTOR:SILICON,PNP	01295	2N3906
Q2164	151-0190-06			TRANSISTOR:SILICON,NPN	80009	151-0190-06
Q2174	151-0188-00			TRANSISTOR:SILICON,PNP	01295	2N3906
Q2176[1]	151-0188-00	B010100	B010769	TRANSISTOR:SILICON,PNP	01295	2N3906
Q2176[1]	151-0216-02	B010770		TRANSISTOR:SILICON,PNP	80009	151-0216-02
Q2176[2]	151-0188-00	B010100	B010734	TRANSISTOR:SILICON,PNP	01295	2N3906
Q2176[2]	151-0216-02	B010735		TRANSISTOR:SILICON,PNP	80009	151-0216-02
Q2242, Q2244	151-1042-02			TRANSISTOR:MATCHED PAIR FET	80009	151-1042-02
Q2246	151-0190-06			TRANSISTOR:SILICON,NPN	80009	151-0190-06
Q2274	151-0190-06			TRANSISTOR:SILICON,NPN	80009	151-0190-06
Q2314[1]	151-0190-06	B010100	B010499	TRANSISTOR:SILICON,NPN	80009	151-0190-06
Q2314[1]	151-0192-00	B010500		TRANSISTOR:SILICON,NPN,SEL FROM MPS6521	80009	151-0192-00
Q2314[2]	151-0190-06	B010100	B010449	TRANSISTOR:SILICON,NPN	80009	151-0190-06
Q2314[2]	151-0192-00	B010450		TRANSISTOR:SILICON,NPN,SEL FROM MPS6521	80009	151-0192-00
Q2326	151-0188-00			TRANSISTOR:SILICON,PNP	01295	2N3906
Q2332	151-0188-00			TRANSISTOR:SILICON,PNP	01295	2N3906
Q2334	151-0124-00			TRANSISTOR:SILICON,NPN,SEL FROM 2N3501	80009	151-0124-00
Q2344	151-0124-00			TRANSISTOR:SILICON,NPN,SEL FROM 2N3501	80009	151-0124-00
Q2354	151-0190-06			TRANSISTOR:SILICON,NPN	80009	151-0190-06
Q2514[1]	151-0188-00			TRANSISTOR:SILICON,PNP	01295	2N3906
Q2516[1]	151-0188-00			TRANSISTOR:SILICON,PNP	01295	2N3906
Q2522[1]	151-0190-06			TRANSISTOR:SILICON,NPN	80009	151-0190-06
Q2542,[1] Q2544	151-1042-02			TRANSISTOR:MATCHED PAIR FET	80009	151-1042-02
Q2546[1]	151-0190-06			TRANSISTOR:SILICON,NPN	80009	151-0190-06
Q2548	151-0190-06			TRANSISTOR:SILICON,NPN	80009	151-0190-06
Q4122[2]	151-1090-01	B010100	B010415	TRANSISTOR:SILICON,DUAL,N-CHANNEL,FET	80009	151-1090-01
Q4122[2]	151-1032-02	B010416		TRANSISTOR:SILICON,DUAL,N-CHANNEL,FET	80009	151-1032-02
Q4122[1]	151-1090-01	B010100	B010431	TRANSISTOR:SILICON,DUAL,N-CHANNEL,FET	80009	151-1090-01
Q4122[1]	151-1032-02	B010432		TRANSISTOR:SILICON,DUAL,N-CHANNEL,FET	80009	151-1032-02
Q4174	151-0199-00			TRANSISTOR:SILICON,PNP	27014	ST65038
Q4176	151-0427-00			TRANSISTOR:SILICON,NPN	80009	151-0427-00
Q4184	151-0199-00			TRANSISTOR:SILICON,PNP	27014	ST65038

[1]T935 only
[2]T932 only

Ckt No.	Tektronix Part No.	Serial/Model No. Eff	Dscont	Name & Description	Mfr Code	Mfr Part Number
Q4186	151-0427-00			TRANSISTOR:SILICON,NPN	80009	151-0427-00
Q4194	151-0198-00			TRANSISTOR:SILICON,NPN,SEL FROM MPS918	80009	151-0198-00
Q4196	151-0198-00			TRANSISTOR:SILICON,NPN,SEL FROM MPS918	80009	151-0198-00
Q4222[1]	151-1090-01	B010100	B010415	TRANSISTOR:SILICON,DUAL,N-CHANNEL,FET	80009	151-1090-01
Q4222[1]	151-1032-02	B010416		TRANSISTOR,SILICON,DUAL,N-CHANNEL,FET	80009	151-1032-02
Q4222[2]	151-1090-01	B010100	B010431	TRANSISTOR,SILICON,DUAL,N-CHANNEL,FET	80009	151-1090-01
Q4222[2]	151-1032-02	B010432		TRANSISTOR,SILICON,DUAL,N-CHANNEL,FET	80009	151-1032-02
Q4274	151-0199-00			TRANSISTOR:SILICON,PNP	27014	ST65038
Q4276	151-0427-00			TRANSISTOR:SILICON,NPN	80009	151-0427-00
Q4284	151-0199-00			TRANSISTOR:SILICON,PNP	27014	ST65038
Q4286	151-0427-00			TRANSISTOR:SILICON,NPN	80009	151-0427-00
Q4294	151-0198-00			TRANSISTOR:SILICON,NPN,SEL FROM MPS918	80009	151-0198-00
Q4296	151-0198-00			TRANSISTOR:SILICON,NPN,SEL FROM MPS918	80009	151-0198-00
Q4302	151-0223-00			TRANSISTOR:SILICON,NPN	80009	151-0223-00
Q4336	151-0199-00			TRANSISTOR:SILICON,PNP	27014	ST65038
Q4344	151-0199-00			TRANSISTOR:SILICON,PNP	27014	ST65038
Q4346	151-0199-00			TRANSISTOR:SILICON,PNP	27014	ST65038
Q4354	151-0199-00			TRANSISTOR:SILICON,PNP	27014	ST65038
Q4356	151-0199-00			TRANSISTOR:SILICON,PNP	27014	ST65038
Q4376	151-0434-00			TRANSISTOR:SILICON,PNP	80009	151-0434-00
Q4386	151-0434-00			TRANSISTOR:SILICON,PNP	80009	151-0434-00
R22	315-0134-00			RES.,FXD,CMPSN:130K OHM,5%,0.25W	01121	CB1345
R23	315-0434-00			RES.,FXD,CMPSN:430K OHM,5%,0.25W	01121	CB4345
R24	315-0104-00			RES.,FXD,CMPSN:100K OHM,5%,0.25W	01121	CB1045
R25	315-0222-00			RES.,FXD,CMPSN:2.2K OHM,5%,0.25W	01121	CB2225
R26	321-0235-00			RES.,FXD,FILM:2.74K OHM,1%,0.125W	91637	MFF1816G27400F
R27	321-0126-00			RES.,FXD,FILM:200 OHM,1%,0.125W	91637	MFF1816G200R0F
R112	321-0085-00			RES.,FXD,FILM:75 OHM,1%,0.125W	91637	MFF1816G75R00F
R114	311-1563-00			RES.,VAR,NONWIR:1K OHM,20%,0.50W	73138	91A R1K
R115	315-0153-00			RES.,FXD,CMPSN:15K OHM,5%,0.25W	01121	CB1535
R116	321-0163-00			RES.,FXD,FILM:487 OHM,1%,0.125W	91637	MFF1816G487R0F
R117	315-0272-00			RES.,FXD,CMPSN:2.7K OHM,5%,0.25W	01121	CB2725
R118A-P	307-0494-00			RES,NTWK,FXD,FI:THICK FILM,VERT OUTPUT	80009	307-0494-00
R122	321-0085-00			RES.,FXD,FILM:75 OHM,1%,0.125W	91637	MFF1816G75R00F
R124	315-0560-00			RES.,FXD,CMPSN:56 OHM,5%,0.25W	01121	CB5605
R126	311-1559-00			RES.,VAR,NONWIR:10K OHM,20%,0.50W	73138	91A-10001M
R412	311-1786-00			RES.,VAR,NONWIR:2K OHM,20%,2W	12697	381-CM40946
R413	315-0102-00			RES.,FXD,CMPSN:1K OHM,5%,0.25W	01121	CB1025
R414	315-0332-00			RES.,FXD,CMPSN:3.3K OHM,5%,0.25W	01121	CB3325
R416	315-0302-00			RES.,FXD,CMPSN:3K OHM,5%,0.25W	01121	CB3025
R417	315-0752-00			RES.,FXD,CMPSN:7.5K OHM,5%,0.25W	01121	CB7525
R419	315-0103-00			RES.,FXD,CMPSN:10K OHM,5%,0.25W	01121	CB1035
R423	315-0513-00			RES.,FXD,CMPSN:51K OHM,5%,0.25W	01121	CB5135
R424	315-0104-00			RES.,FXD,CMPSN:100K OHM,5%,0.25W	01121	CB1045
R425	315-0751-00			RES.,FXD,CMPSN:750 OHM,5%,0.25W	01121	CB7515
R426	315-0510-00			RES.,FXD,CMPSN:51 OHM,5%,0.25W	01121	CB5105
R432	315-0222-00			RES.,FXD,CMPSN:2.2K OHM,5%,0.25W	01121	CB2225
R433	315-0104-00			RES.,FXD,CMPSN:100K OHM,5%,0.25W	01121	CB1045
R434	315-0431-00			RES.,FXD,CMPSN:430 OHM,5%,0.25W	01121	CB4315
R435[1]	315-0510-00	B010100	B011561	RES.,FXD,CMPSN:51 OHM,5%,0.25W	01121	CB5105
R435[2]	315-0360-00	B011562		RES.,FXD,CMPSN:36 OHM,5%,0.25W	01121	CB3605
R435[1]	315-0510-00	B010100	B012062	RES.,FXD,CMPSN:51 OHM,5%,0.25W	01121	CB5105

[1]T932 only
[2]T935 only

Ckt No.	Tektronix Part No.	Serial/Model No. Eff	Dscont	Name & Description	Mfr Code	Mfr Part Number
R435[1]	315-0360-00	B012063		RES.,FXD,CMPSN:36 OHM,5%,0.25W	01121	CB3605
R437	315-0751-00			RES.,FXD,CMPSN:750 OHM,5%,0.25W	01121	CB7515
R443	315-0204-00			RES.,FXD,CMPSN:200K OHM,5%,0.25W	01121	CB2045
R444A-D	307-0495-01			RES,NTWK,FXD,FI:NETWORK,HV,NON STORAGE	80009	307-0495-01
R445	315-0103-00			RES.,FXD,CMPSN:10K OHM,5%,0.25W	01121	CB1035
R446	315-0103-00			RES.,FXD,CMPSN:10K OHM,5%,0.25W	01121	CB1035
R447	315-0683-00			RES.,FXD,CMPSN:68K OHM,5%,0.25W	01121	CB6835
R453	315-0102-00			RES.,FXD,CMPSN:1K OHM,5%,0.25W	01121	CB1025
R455	315-0512-00			RES.,FXD,CMPSN:5.1K OHM,5%,0.25W	01121	CB5125
R457	315-0431-00			RES.,FXD,CMPSN:430 OHM,5%,0.25W	01121	CB4315
R458	301-0510-00			RES.,FXD,CMPSN:51 OHM,5%,0.50W	01121	EB5105
R462	315-0303-00			RES.,FXD,CMPSN:30K OHM,5%,0.25W	01121	CB3035
R463	315-0105-00			RES.,FXD,CMPSN:1M OHM,5%,0.25W	01121	CB1055
R464	315-0226-00			RES.,FXD,CMPSN:22M OHM,5%,0.25W	01121	CB2265
R465	315-0303-00			RES.,FXD,CMPSN:30K OHM,5%,0.25W	01121	CB3035
R468	311-1784-00			RES.,VAR,NONWIR:5M OHM,20%,1W	12697	381-CM40944
R472	311-1562-00			RES.,VAR,NONWIR:2K OHM,20%,0.50W	73138	91A R2K
R473	311-1555-00			RES.,VAR,NONWIR:100K OHM,20%,0.5W	73138	91A R100K
R474	311-1562-00			RES.,VAR,NONWIR:2K OHM,20%,0.50W	73138	91A R2K
R475	315-0154-00			RES.,FXD,CMPSN:150K OHM,5%,0.25W	01121	CB1545
R476	315-0333-00			RES.,FXD,CMPSN:33K OHM,5%,0.25W	01121	CB3335
R477	311-1555-00			RES.,VAR,NONWIR:100K OHM,20%,0.5W	73138	91A R100K
R478	315-0471-00			RES.,FXD,CMPSN:470 OHM,5%,0.25W	01121	CB4715
R722	301-0473-00			RES.,FXD,CMPSN:47K OHM,5%,0.50W	01121	EB4735
R726	315-0104-00			RES.,FXD,CMPSN:100K OHM,5%,0.25W	01121	CB1045
R732	321-0193-00			RES.,FXD,FILM:1K OHM,1%,0.125W	91637	MFF1816G10000F
R733	321-0368-00			RES.,FXD,FILM:66.5K OHM,1%,0.125W	91637	MFF1816G66501F
R734	308-0574-00			RES.,FXD,WW:10 OHM,5%,2W	91637	RS2B162K10R00J
R736	321-0385-00			RES.,FXD,FILM:100K OHM,1%,0.125W	91637	MFF1816G10002F
R737	321-0280-00			RES.,FXD,FILM:8.06K OHM,1%,0.125W	91637	MFF1816G80600F
R741	315-0391-00			RES.,FXD,CMPSN:390 OHM,5%,0.25W	01121	CB3915
R742	315-0563-00			RES.,FXD,CMPSN:56K OHM,5%,0.25W	01121	CB5635
R745	315-0432-00			RES.,FXD,CMPSN:4.3K OHM,5%,0.25W	01121	CB4325
R746	315-0102-00			RES.,FXD,CMPSN:1K OHM,5%,0.25W	01121	CB1025
R747	315-0104-00			RES.,FXD,CMPSN:100K OHM,5%,0.25W	01121	CB1045
R752	321-0130-00			RES.,FXD,FILM:221 OHM,1%,0.125W	91637	MFF1816G221R0F
R753	321-0239-00			RES.,FXD,FILM:3.01K OHM,1%,0.125W	91637	MFF1816G30100F
R754	308-0755-00			RES.,FXD,WW:0.75 OHM,5%,2W	75042	BWH-R7500J
R756	321-0671-00			RES.,FXD,FILM:8.51K OHM,0.5%,0.125W	91637	MFF1816D85100D
R757	321-0671-00			RES.,FXD,FILM:8.51K OHM,0.5%,0.125W	91637	MFF1816D85100D
R762	315-0561-00			RES.,FXD,CMPSN:560 OHM,5%,0.25W	01121	CB5615
R763	315-0182-00			RES.,FXD,CMPSN:1.8K OHM,5%,0.25W	01121	CB1825
R764	321-0239-00			RES.,FXD,FILM:3.01K OHM,1%,0.125W	91637	MFF1816G30100F
R765	321-0130-00			RES.,FXD,FILM:221 OHM,1%,0.125W	91637	MFF1816G221R0F
R766	301-0391-00			RES.,FXD,CMPSN:390 OHM,5%,0.50W	01121	EB3915
R772	321-0256-00			RES.,FXD,FILM:4.53K OHM,1%,0.125W	91637	MFF1816G45300F
R773	311-1563-00			RES.,VAR,NONWIR:1K OHM,20%,0.50W	73138	91A R1K
R774	321-0232-00			RES.,FXD,FILM:2.55K OHM,1%,0.125W	91637	MFF1816G25500F
R775	308-0755-00			RES.,FXD,WW:0.75 OHM,5%,2W	75042	BWH-R7500J
R784	308-0781-00			RES.,FXD,WW:1.34K OHM,2%,10W	91637	HLW10R1Z-13400G
R791	315-0435-00			RES.,FXD,CMPSN:4.3M OHM,5%,0.25W	01121	CB4355
R792	321-0402-00			RES.,FXD,FILM:150K OHM,1%,0.125W	91637	MFF1816G15002F
R793	321-0283-00			RES.,FXD,FILM:8.66K OHM,1%,0.125W	91637	MFF1816G86600F

[1]T935 only

Ckt No.	Tektronix Part No.	Serial/Model No. Eff	Dscont	Name & Description	Mfr Code	Mfr Part Number
R794	321-0394-00			RES.,FXD,FILM:124K OHM,1%,0.125W	91637	MFF1816G12402F
R795	321-0283-00			RES.,FXD,FILM:8.66K OHM,1%,0.125W	91637	MFF1816G86600F
R796	315-0104-00			RES.,FXD,CMPSN:100K OHM,5%,0.25W	01121	CB1045
R797	315-0205-00			RES.,FXD,CMPSN:2M OHM,5%,0.25W	01121	CB2055
R799	315-0305-00			RES.,FXD,CMPSN:3M OHM,5%,0.25W	01121	CB3055
R2101	321-0463-00			RES.,FXD,FILM:649K OHM,1%,0.125W	91637	MFF1816G64902F
R2102	315-0152-00			RES.,FXD,CMPSN:1.5K OHM,5%,0.25W	01121	CB1525
R2103	321-0439-00			RES.,FXD,FILM:365K OHM,1%,0.125W	91637	MFF1816G36502F
R2104	315-0510-00			RES.,FXD,CMPSN:51 OHM,5%,0.25W	01121	CB5105
R2106	315-0510-00			RES.,FXD,CMPSN:51 OHM,5%,0.25W	01121	CB5105
R2107	315-0102-00	B010100	B010179	RES.,FXD,CMPSN:1K OHM,5%,0.25W	01121	CB1025
R2107	315-0202-00	B010180		RES.,FXD,CMPSN:2K OHM,5%,0.25W	01121	CB2025
R2108	315-0272-00			RES.,FXD,CMPSN:2.7K OHM,5%,0.25W	01121	CB2725
R2109	315-0201-00			RES.,FXD,CMPSN:200 OHM,5%,0.25W	01121	CB2015
R2111	315-0103-00	B010100	B010179	RES.,FXD,CMPSN:10K OHM,5%,0.25W	01121	CB1035
R2111	315-0203-00	B010180		RES.,FXD,CMPSN:20K OHM,5%,0.25W	01121	CB2035
R2112	315-0622-00			RES.,FXD,CMPSN:6.2K OHM,5%,0.25W	01121	CB6225
R2113	315-0122-00			RES.,FXD,CMPSN:1.2K OHM,5%,0.25W	01121	CB1225
R2114	321-0251-00			RES.,FXD,FILM:4.02K OHM,1%,0.125W	91637	MFF1816G40200F
R2115	321-0214-00			RES.,FXD,FILM:1.65K OHM,1%,0.125W	91637	MFF1816G16500F
R2116	315-0182-00			RES.,FXD,CMPSN:1.8K OHM,5%,0.25W	01121	CB1825
R2118	315-0102-00			RES.,FXD,CMPSN:1K OHM,5%,0.25W	01121	CB1025
R2121	315-0132-00			RES.,FXD,CMPSN:1.3K OHM,5%,0.25W	01121	CB1325
R2122[1]	315-0270-00	XB011794		RES.,FXD,CMPSN:27 OHM,5%,0.25W	01121	CB2705
R2122[2]	315-0270-00	XB012319		RES.,FXD,CMPSN:27 OHM,5%,0.25W	01121	CB2705
R2124	315-0242-00			RES.,FXD,CMPSN:2.4K OHM,5%,0.25W	01121	CB2425
R2125	315-0751-00			RES.,FXD,CMPSN:750 OHM,5%,0.25W	01121	CB7515
R2126	315-0510-00			RES.,FXD,CMPSN:51 OHM,5%,0.25W	01121	CB5105
R2127	315-0102-00			RES.,FXD,CMPSN:1K OHM,5%,0.25W	01121	CB1025
R2128	315-0102-00			RES.,FXD,CMPSN:1K OHM,5%,0.25W	01121	CB1025
R2131	315-0221-00			RES.,FXD,CMPSN:220 OHM,5%,0.25W	01121	CB2215
R2132	315-0222-00			RES.,FXD,CMPSN:2.2K OHM,5%,0.25W	01121	CB2225
R2133	323-0346-00			RES.,FXD,FILM:39.2K OHM,1%,0.50W	75042	CECT0-3922F
R2135	315-0510-00			RES.,FXD,CMPSN:51 OHM,5%,0.25W	01121	CB5105
R2136	315-0751-00			RES.,FXD,CMPSN:750 OHM,5%,0.25W	01121	CB7515
R2137	315-0622-00			RES.,FXD,CMPSN:6.2K OHM,5%,0.25W	01121	CB6225
R2138	311-1787-00			RES.,VAR,NONWIR:20K OHM,10%,2W	12697	470-CM40947
R2142	321-0231-00			RES.,FXD,FILM:2.49K OHM,1%,0.125W	91637	MFF1816G24900F
R2143	321-0231-00			RES.,FXD,FILM:2.49K OHM,1%,0.125W	91637	MFF1816G24900F
R2144	315-0821-00			RES.,FXD,CMPSN:820 OHM,5%,0.25W	01121	CB8215
R2145	321-0231-00			RES.,FXD,FILM:2.49K OHM,1%,0.125W	91637	MFF1816G24900F
R2146	321-0189-00			RES.,FXD,FILM:909 OHM,1%,0.125W	91637	MFF1816G909R0F
R2147	315-0222-00			RES.,FXD,CMPSN:2.2K OHM,5%,0.25W	01121	CB2225
R2152	315-0911-00			RES.,FXD,CMPSN:910 OHM,5%,0.25W	01121	CB9115
R2153	315-0682-00			RES.,FXD,CMPSN:6.8K OHM,5%,0.25W	01121	CB6825
R2154	315-0822-00			RES.,FXD,CMPSN:8.2K OHM,5%,0.25W	01121	CB8225
R2156	315-0152-00	B010100	B010349	RES.,FXD,CMPSN:1.5K OHM,5%,0.25W	01121	CB1525
R2156	315-0102-00	B010350		RES.,FXD,CMPSN:1K OHM,5%,0.25W	01121	CB1025
R2157	315-0272-00	B010100	B010349	RES.,FXD,CMPSN:2.7K OHM,5%,0.25W	01121	CB2725
R2157	315-0222-00	B010350		RES.,FXD,CMPSN:2.2K OHM,5%,0.25W	01121	CB2225
R2158	315-0163-00			RES.,FXD,CMPSN:16K OHM,5%,0.25W	01121	CB1635
R2162	315-0221-00			RES.,FXD,CMPSN:220 OHM,5%,0.25W	01121	CB2215
R2163	315-0103-00			RES.,FXD,CMPSN:10K OHM,5%,0.25W	01121	CB1035

[1] T932 only
[2] T935 only

Ckt No.	Tektronix Part No.	Serial/Model No. Eff	Dscont	Name & Description	Mfr Code	Mfr Part Number
R2164	315-0222-00			RES.,FXD,CMPSN:2.2K OHM,5%,0.25W	01121	CB2225
R2166	315-0222-00			RES.,FXD,CMPSN:2.2K OHM,5%,0.25W	01121	CB2225
R2167	315-0203-00			RES.,FXD,CMPSN:20K OHM,5%,0.25W	01121	CB2035
R2171	315-0751-00			RES.,FXD,CMPSN:750 OHM,5%,0.25W	01121	CB7515
R2172	315-0222-00			RES.,FXD,CMPSN:2.2K OHM,5%,0.25W	01121	CB2225
R2174	315-0182-00			RES.,FXD,CMPSN:1.8K OHM,5%,0.25W	01121	CB1825
R2175[1]	315-0512-00	B010100	B010769	RES.,FXD,CMPSN:5.1K OHM,5%,0.25W	01121	CB5125
R2175[1]	315-0222-00	B010770		RES.,FXD,CMPSN:2.2K OHM,5%,0.25W	01121	CB2225
R2175[2]	315-0512-00	B010100	B010734	RES.,FXD,CMPSN:5.1K OHM,5%,0.25W	01121	CB5125
R2175[2]	315-0222-00	B010735		RES.,FXD,CMPSN:2.2K OHM,5%,0.25W	01121	CB2225
R2176	315-0222-00			RES.,FXD,CMPSN:2.2K OHM,5%,0.25W	01121	CB2225
R2178	315-0222-00			RES.,FXD,CMPSN:2.2K OHM,5%,0.25W	01121	CB2225
R2182	321-0236-00			RES.,FXD,FILM:2.8K OHM,1%,0.125W	91637	MFF1816G28000F
R2185	315-0512-00			RES.,FXD,CMPSN:5.1K OHM,5%,0.25W	01121	CB5125
R2186	315-0272-00			RES.,FXD,CMPSN:2.7K OHM,5%,0.25W	01121	CB2725
R2188	315-0752-00			RES.,FXD,CMPSN:7.5K OHM,5%,0.25W	01121	CB7525
R2198	315-0510-00			RES.,FXD,CMPSN:51 OHM,5%,0.25W	01121	CB5105
R2223	315-0152-00	B010100	B010349	RES.,FXD,CMPSN:1.5K OHM,5%,0.25W	01121	CB1525
R2223	315-0911-00	B010350		RES.,FXD,CMPSN:910 OHM,5%,0.25W	01121	CB9115
R2224	315-0272-00	B010100	B010349	RES.,FXD,CMPSN:2.7K OHM,5%,0.25W	01121	CB2725
R2224	315-0242-00	B010350		RES.,FXD,CMPSN:2.4K OHM,5%,0.25W	01121	CB2425
R2226	315-0203-00			RES.,FXD,CMPSN:20K OHM,5%,0.25W	01121	CB2035
R2227	315-0132-00	B010100	B010349	RES.,FXD,CMPSN:1.3K OHM,5%,0.25W	01121	CB1325
R2227	315-0102-00	B010350		RES.,FXD,CMPSN:1K OHM,5%,0.25W	01121	CB1025
R2233	315-0122-00			RES.,FXD,CMPSN:1.2K OHM,5%,0.25W	01121	CB1225
R2235	315-0681-00			RES.,FXD,CMPSN:680 OHM,5%,0.25W	01121	CB6815
R2236	315-0680-00			RES.,FXD,CMPSN:68 OHM,5%,0.25W	01121	CB6805
R2237	315-0512-00			RES.,FXD,CMPSN:5.1K OHM,5%,0.25W	01121	CB5125
R2243	308-0212-00			RES.,FXD,WW:10K OHM,5%,3W	91637	CW2B-B10001J
R2245	321-0326-00			RES.,FXD,FILM:24.3K OHM,1%,0.125W	91637	MFF1816G24301F
R2246	315-0510-00			RES.,FXD,CMPSN:51 OHM,5%,0.25W	01121	CB5105
R2247	321-0312-00			RES.,FXD,FILM:17.4K OHM,1%,0.125W	91637	MFF1816G17401F
R2252	315-0100-00			RES.,FXD,CMPSN:10 OHM,5%,0.25W	01121	CB1005
R2253	321-0444-00			RES.,FXD,FILM:412K OHM,1%,0.125W	91637	MFF1816G41202F
R2254[1]	321-0377-00	B010100	B010499	RES.,FXD,FILM:82.5K OHM,1%,0.125W	91637	MFF1816G82501F
R2254[1]	321-0377-01	B010500		RES.,FXD,FILM:82.5K OHM,0.5%,0.125W	91637	MFF1816G82501D
R2254[2]	321-0377-00	B010100	B010449	RES.,FXD,FILM:82.5K OHM,1%,0.125W	91637	MFF1816G82501F
R2254[2]	321-0377-01	B010450		RES.,FXD,FILM:82.5K OHM,0.5%,0.125W	91637	MFF1816G82501D
R2255[1]	321-0377-00	B010100	B010499	RES.,FXD,FILM:82.5K OHM,1%,0.125W	91637	MFF1816G82501F
R2255[1]	321-0377-01	B010500		RES.,FXD,FILM:82.5K OHM,0.5%,0.125W	91637	MFF1816G82501D
R2255[2]	321-0377-00	B010100	B010449	RES.,FXD,FILM:82.5K OHM,1%,0.125W	91637	MFF1816G82501F
R2255[2]	321-0377-01	B010450		RES.,FXD,FILM:82.5K OHM,0.5%,0.125W	91637	MFF1816G82501D
R2256	321-0348-00			RES.,FXD,FILM:41.2K OHM,1%,0.125W	91637	MFF1816G41201F
R2257[1]	321-0281-00	B010100	B010499	RES.,FXD,FILM:8.25K OHM,1%,0.125W	91637	MFF1816G82500F
R2257[1]	321-0281-01	B010500		RES.,FXD,FILM:8.25K OHM,0.5%,0.125W	91637	MFF1816G82500D
R2257[2]	321-0281-00	B010100	B010449	RES.,FXD,FILM:8.25K OHM,1%,0.125W	91637	MFF1816G82500F
R2257[2]	321-0281-01	B010450		RES.,FXD,FILM:8.25K OHM,0.5%,0.125W	91637	MFF1816G82500D
R2258[1]	321-0281-00	B010100	B010499	RES.,FXD,FILM:8.25K OHM,1%,0.125W	91637	MFF1816G82500F
R2258[1]	321-0281-01	B010500		RES.,FXD,FILM:8.25K OHM,0.5%,0.125W	91637	MFF1816G82500D
R2258[2]	321-0281-00	B010100	B010449	RES.,FXD,FILM:8.25K OHM,1%,0.125W	91637	MFF1816G82500F
R2258[2]	321-0281-01	B010450		RES.,FXD,FILM:8.25K OHM,0.5%,0.125W	91637	MFF1816G82500D
R2262	322-0519-01			RES.,FXD,FILM:2.49M OHM,0.5%,0.25W	91637	HFF143G24903D
R2263[1]	321-0473-00	B010100	B010499	RES.,FXD,FILM:825K OHM,1%,0.125W	91637	MFF1816G82502F

[1]T935 only
[2]T932 only

Ckt No.	Tektronix Part No.	Serial/Model No. Eff	Dscont	Name & Description	Mfr Code	Mfr Part Number
R2263[1]	321-0473-01	B010500		RES.,FXD,FILM:825K OHM,0.5%,0.125W	91637	MFF1816G82502D
R2263[2]	321-0473-00	B010100	B010449	RES.,FXD,FILM:825K OHM,1%,0.125W	91637	MFF1816G82502F
R2263[2]	321-0473-01	B010450		RES.,FXD,FILM:825K OHM,0.5%,0.125W	91637	MFF1816G82502D
R2264[1]	321-0473-00	B010100	B010499	RES.,FXD,FILM:825K OHM,1%,0.125W	91637	MFF1816G82502F
R2264[1]	321-0473-01	B010500		RES.,FXD,FILM:825K OHM,0.5%,0.125W	91637	MFF1816G82502D
R2264[2]	321-0473-00	B010100	B010449	RES.,FXD,FILM:825K OHM,1%,0.125W	91637	MFF1816G82502F
R2264[2]	321-0473-01	B010450		RES.,FXD,FILM:825K OHM,0.5%,0.125W	91637	MFF1816G82502D
R2271	315-0434-00			RES.,FXD,CMPSN:430K OHM,5%,0.25W	01121	CB4345
R2272	311-0580-00			RES.,VAR,NONWIR:50K OHM,20%,0.50W	11237	300SF-41695
R2274	315-0512-00			RES.,FXD,CMPSN:5.1K OHM,5%,0.25W	01121	CB5125
R2276	315-0103-00			RES.,FXD,CMPSN:10K OHM,5%,0.25W	01121	CB1035
R2278	315-0512-00			RES.,FXD,CMPSN:5.1K OHM,5%,0.25W	01121	CB5125
R2310[1]	321-0268-03	XB010180	B012318X	RES.,FXD,FILM:6.04K OHM,0.25%,0.125W	91637	MFF1816D60400C
R2311[1]	321-0271-00	B010100	B010179	RES.,FXD,FILM:6.49K OHM,1%,0.125W	91637	MFF1816G64900F
R2311[1]	321-0159-00	B010180	B012318	RES.,FXD,FILM:442 OHM,1%,0.125W	91637	MFF1816G442R0F
R2311[1]	321-0271-00	B012319		RES.,FXD,FILM:6.49K OHM,1%,0.125W	91637	MFF1816G64900F
R2312[1]	321-0298-00	B010100	B010499	RES.,FXD,FILM:12.4K OHM,1%,0.125W	91637	MFF1816G12401F
R2312[1]	321-0296-00	B010500		RES.,FXD,FILM:11.8K OHM,1%,0.125W	91637	MFF1816G11801F
R2312[2]	321-0298-00	B010100	B010449	RES.,FXD,FILM:12.4K OHM,1%,0.125W	91637	MFF1816G12401F
R2312[2]	321-0296-00	B010450		RES.,FXD,FILM:11.8K OHM,1%,0.125W	91637	MFF1816G11801F
R2313	321-0279-00			RES.,FXD,FILM:7.87K OHM,1%,0.125W	91637	MFF1816G78700F
R2314[1]	321-0268-03	XB010180	B012318X	RES.,FXD,FILM:6.04K OHM,0.25%,0.125W	91637	MFF1816D60400C
R2315	315-0752-00			RES.,FXD,CMPSN:7.5K OHM,5%,0.25W	01121	CB7525
R2316	311-1788-00			RES.,VAR,NONWIR:20K OHM,20%,2W	12697	470-CM40948
R2317	315-0751-00			RES.,FXD,CMPSN:750 OHM,5%,0.25W	01121	CB7515
R2322	311-1789-00			RES.,VAR,NONWIR:100K OHM,10%,1W	12697	381-CM40949
R2323	321-0197-00			RES.,FXD,FILM:1.1K OHM,1%,0.125W	91637	MFF1816G11000F
R2324	315-0162-00			RES.,FXD,CMPSN:1.6K OHM,5%,0.25W	01121	CB1625
R2325	315-0392-00			RES.,FXD,CMPSN:3.9K OHM,5%,0.25W	01121	CB3925
R2326	315-0332-00			RES.,FXD,CMPSN:3.3K OHM,5%,0.25W	01121	CB3325
R2327	315-0331-00			RES.,FXD,CMPSN:330 OHM,5%,0.25W	01121	CB3315
R2328	315-0101-00			RES.,FXD,CMPSN:100 OHM,5%,0.25W	01121	CB1015
R2331	315-0202-00			RES.,FXD,CMPSN:2K OHM,5%,0.25W	01121	CB2025
R2332[1]	311-1814-00	B010100	B010449	RES.,VAR,NONWIR:2K OHM,20%,0.50W	73138	91XR2K
R2332[1]	311-1239-00	B010450		RES.,VAR,NONWIR:2.5K OHM,10%,0.50W	73138	72X-76-0252K
R2332[2]	311-1814-00	B010100	B010374	RES.,VAR,NONWIR:2K OHM,20%,0.50W	73138	91XR2K
R2332[2]	311-1239-00	B010375		RES.,VAR,NONWIR:2.5K OHM,10%,0.50W	73138	72X-76-0252K
R2334	315-0752-00			RES.,FXD,CMPSN:7.5K OHM,5%,0.25W	01121	CB7525
R2335	315-0753-00			RES.,FXD,CMPSN:75K OHM,5%,0.25W	01121	CB7535
R2336	315-0152-00			RES.,FXD,CMPSN:1.5K OHM,5%,0.25W	01121	CB1525
R2337	308-0329-00			RES.,FXD,WW:4K OHM,2%,3W	91637	RS2B-B40000G
R2342	315-0152-00			RES.,FXD,CMPSN:1.5K OHM,5%,0.25W	01121	CB1525
R2344	308-0329-00			RES.,FXD,WW:4K OHM,2%,3W	91637	RS2B-B40000G
R2345	315-0331-00			RES.,FXD,CMPSN:330 OHM,5%,0.25W	01121	CB3315
R2347	315-0753-00			RES.,FXD,CMPSN:75K OHM,5%,0.25W	01121	CB7535
R2352	315-0104-00			RES.,FXD,CMPSN:100K OHM,5%,0.25W	01121	CB1045
R2353	315-0622-00			RES.,FXD,CMPSN:6.2K OHM,5%,0.25W	01121	CB6225
R2354	315-0103-00			RES.,FXD,CMPSN:10K OHM,5%,0.25W	01121	CB1035
R2355	315-0202-00			RES.,FXD,CMPSN:2K OHM,5%,0.25W	01121	CB2025
R2356	315-0182-00			RES.,FXD,CMPSN:1.8K OHM,5%,0.25W	01121	CB1825
R2357	315-0752-00			RES.,FXD,CMPSN:7.5K OHM,5%,0.25W	01121	CB7525
R2392	301-0240-00			RES.,FXD,CMPSN:24 OHM,5%,0.50W	01121	EB2405

[1]T932 only
[2]T935 only

Ckt No.	Tektronix Part No.	Serial/Model No. Eff	Dscont	Name & Description	Mfr Code	Mfr Part Number
R2511[1]	315-0103-00			RES.,FXD,CMPSN:10K OHM,5%,0.25W	01121	CB1035
R2512[1]	315-0223-00			RES.,FXD,CMPSN:22K OHM,5%,0.25W	01121	CB2235
R2514[1]	315-0104-00			RES.,FXD,CMPSN:100K OHM,5%,0.25W	01121	CB1045
R2515[1]	321-0126-00			RES.,FXD,FILM:200 OHM,1%,0.125W	91637	MFF1816G200R0F
R2516[1]	311-1531-00			RES.,VAR,WW:2K OHM,5%,1.5W	01121	535-9504
R2517[1]	315-0102-00			RES.,FXD,CMPSN:1K OHM,5%,0.25W	01121	CB1025
R2519[1]	315-0752-00			RES.,FXD,CMPSN:7.5K OHM,5%,0.25W	01121	CB7525
R2521[1]	315-0563-00			RES.,FXD,CMPSN:56K OHM,5%,0.25W	01121	CB5635
R2523[1]	315-0562-00			RES.,FXD,CMPSN:5.6K OHM,5%,0.25W	01121	CB5625
R2525[1]	315-0392-00			RES.,FXD,CMPSN:3.9K OHM,5%,0.25W	01121	CB3925
R2527[1]	315-0622-00			RES.,FXD,CMPSN:6.2K OHM,5%,0.25W	01121	CB6225
R2531[1]	315-0243-00			RES.,FXD,CMPSN:24K OHM,5%,0.25W	01121	CB2435
R2532[1]	315-0512-00			RES.,FXD,CMPSN:5.1K OHM,5%,0.25W	01121	CB5125
R2533[1]	315-0153-00			RES.,FXD,CMPSN:15K OHM,5%,0.25W	01121	CB1535
R2535[1]	315-0122-00			RES.,FXD,CMPSN:1.2K OHM,5%,0.25W	01121	CB1225
R2537[1]	315-0681-00			RES.,FXD,CMPSN:680 OHM,5%,0.25W	01121	CB6815
R2539[1]	315-0680-00			RES.,FXD,CMPSN:68 OHM,5%,0.25W	01121	CB6805
R2541[1]	308-0212-00			RES.,FXD,WW:10K OHM,5%,3W	91637	CW2B-B10001J
R2544[1]	321-0326-00			RES.,FXD,FILM:24.3K OHM,1%,0.125W	91637	MFF1816G24301F
R2545[1]	321-0312-00			RES.,FXD,FILM:17.4K OHM,1%,0.125W	91637	MFF1816G17401F
R2546[1]	315-0510-00			RES.,FXD,CMPSN:51 OHM,5%,0.25W	01121	CB5105
R2547[1]	315-0203-00			RES.,FXD,CMPSN:20K OHM,5%,0.25W	01121	CB2035
R2548[1]	315-0103-00			RES.,FXD,CMPSN:10K OHM,5%,0.25W	01121	CB1035
R2552[1]	315-0100-00			RES.,FXD,CMPSN:10 OHM,5%,0.25W	01121	CB1005
R2553[1]	321-0444-00			RES.,FXD,FILM:412K OHM,1%,0.125W	91637	MFF1816G41202F
R2554[1]	321-0377-00	B010100	B010499	RES.,FXD,FILM:82.5K OHM,1%,0.125W	91637	MFF1816G82501F
R2554[1]	321-0377-01	B010500		RES.,FXD,FILM:82.5K OHM,0.5%,0.125W	91637	MFF1816G82501D
R2555[1]	321-0377-00	B010100	B010499	RES.,FXD,FILM:82.5K OHM,1%,0.125W	91637	MFF1816G82501F
R2555[1]	321-0377-01	B010500		RES.,FXD,FILM:82.5K OHM,0.5%,0.125W	91637	MFF1816G82501D
R2556[1]	321-0348-00			RES.,FXD,FILM:41.2K OHM,1%,0.125W	91637	MFF1816G41201F
R2557[1]	321-0281-00	B010100	B010499	RES.,FXD,FILM:8.25K OHM,1%,0.125W	91637	MFF1816G82500F
R2557[1]	321-0281-01	B010500		RES.,FXD,FILM:8.25K OHM,0.5%,0.125W	91637	MFF1816G82500D
R2558[1]	321-0281-00	B010100	B010499	RES.,FXD,FILM:8.25K OHM,1%,0.125W	91637	MFF1816G82500F
R2558[1]	321-0281-01	B010500		RES.,FXD,FILM:8.25K OHM,0.5%,0.125W	91637	MFF1816G82500D
R2590[1]	301-0151-00			RES.,FXD,CMPSN:150 OHM,5%,0.50W	01121	EB1515
R4102	315-0105-00			RES.,FXD,CMPSN:1M OHM,5%,0.25W	01121	CB1055
R4104	315-0241-00			RES.,FXD,CMPSN:240 OHM,5%,0.25W	01121	CB2415
R4105	321-0790-01			RES.,FXD,FILM:990K OHM,0.5%,0.125W	91637	HFF1104G99002D
R4106	315-0180-00			RES.,FXD,CMPSN:18 OHM,5%,0.25W	01121	CB1805
R4107	321-1289-01			RES.,FXD,FILM:10.1K OHM,0.5%,0.125W	91637	MFF1816G10101D
R4108	315-0330-00			RES.,FXD,CMPSN:33 OHM,5%,0.25W	01121	CB3305
R4114	321-0807-01			RES.,FXD,FILM:900K OHM,0.5%,0.125W	91637	HFF110F90002D
R4116	321-1389-01			RES.,FXD,FILM:111K OHM,0.5%,0.125W	91637	MFF1816G11102D
R4117	315-0100-00			RES.,FXD,CMPSN:10 OHM,5%,0.25W	01121	CB1005
R4118	315-0151-00			RES.,FXD,CMPSN:150 OHM,5%,0.25W	01121	CB1515
R4121	321-0481-00			RES.,FXD,FILM:1M OHM,1%,0.125W	91637	MFF1816G10003F
R4122	315-0474-00			RES.,FXD,CMPSN:470K OHM,5%,0.25W	01121	CB4745
R4124	321-0030-00			RES.,FXD,FILM:20 OHM,1%,0.125W	91637	MFF1816G20R00F
R4125	321-0030-00			RES.,FXD,FILM:20 OHM,1%,0.125W	91637	MFF1816G20R00F
R4127	315-0152-00			RES.,FXD,CMPSN:1.5K OHM,5%,0.25W	01121	CB1525
R4128[2]	315-0823-00	XB010330	B010415X	RES.,FXD,CMPSN:82K OHM,5%,0.25W	01121	CB8235
R4128[1]	315-0823-00	XB010330	B010431X	RES.,FXD,CMPSN:82K OHM,5%,0.25W	01121	CB8235
R4129[2]	315-0122-00	XB010330	B010415X	RES.,FXD,CMPSN:1.2K OHM,5%,0.25W	01121	CB1225

[1]T935 only
[2]T932 only

Ckt No.	Tektronix Part No.	Serial/Model No. Eff	Dscont	Name & Description	Mfr Code	Mfr Part Number
R4129[1]	315-0122-00	XB010330	B010431X	RES.,FXD,CMPSN:1.2K OHM,5%,0.25W	01121	CB1225
R4130	311-1559-00			RES.,VAR,NONWIR:10K OHM,20%,0.50W	73138	91A-10001M
R4131	315-0153-00			RES.,FXD,CMPSN:15K OHM,5%,0.25W	01121	CB1535
R4133	315-0151-00			RES.,FXD,CMPSN:150 OHM,5%,0.25W	01121	CB1515
R4136	321-0077-00			RES.,FXD,FILM:61.9 OHM,1%,0.125W	91637	MFF1816G61R90F
R4137	315-0152-00			RES.,FXD,CMPSN:1.5K OHM,5%,0.25W	01121	CB1525
R4143	321-0062-00			RES.,FXD,FILM:43.2 OHM,1%,0.125W	91637	MFF1816G43R20F
R4144	321-0114-00			RES.,FXD,FILM:150 OHM,1%,0.125W	91637	MFF1816G150R0F
R4145	321-0771-01			RES.,FXD,FILM:50 OHM,0.5%,0.125W	91637	MFF1816G50R00D
R4146	321-0771-01			RES.,FXD,FILM:50 OHM,0.5%,0.125W	91637	MFF1816G50R00D
R4147	321-0030-00			RES.,FXD,FILM:20 OHM,1%,0.125W	91637	MFF1816G20R00F
R4151	311-1563-00			RES.,VAR,NONWIR:1K OHM,20%,0.50W	73138	91A R1K
R4152	311-1785-00			RES.,VAR,NONWIR:1K OHM,5%,2W	12697	381-CM40945
R4154	321-0078-00			RES.,FXD,FILM:63.4 OHM,1%,0.125W	91637	MFF1816G63R40F
R4156	315-0621-00			RES.,FXD,CMPSN:620 OHM,5%,0.25W	01121	CB6215
R4157	321-0225-00			RES.,FXD,FILM:2.15K OHM,1%,0.125W	91637	MFF1816G21500F
R4158	315-0751-00			RES.,FXD,CMPSN:750 OHM,5%,0.25W	01121	CB7515
R4161	321-0154-00			RES.,FXD,FILM:392 OHM,1%,0.125W	91637	MFF1816G392R0F
R4162	321-0070-00			RES.,FXD,FILM:52.3 OHM,1%,0.125W	91637	MFF1816G52R30F
R4166	315-0682-00			RES.,FXD,CMPSN:6.8K OHM,5%,0.25W	01121	CB6825
R4167	321-0225-00			RES.,FXD,FILM:2.15K OHM,1%,0.125W	91637	MFF1816G21500F
R4168	315-0751-00			RES.,FXD,CMPSN:750 OHM,5%,0.25W	01121	CB7515
R4171	321-0185-00			RES.,FXD,FILM:825 OHM,1%,0.125W	91637	MFF1816G825R0F
R4172	315-0132-00			RES.,FXD,CMPSN:1.3K OHM,5%,0.25W	01121	CB1325
R4173	321-0164-00			RES.,FXD,FILM:499 OHM,1%,0.125W	91637	MFF1816G499R0F
R4174	321-0078-00			RES.,FXD,FILM:63.4 OHM,1%,0.125W	91637	MFF1816G63R40F
R4175	315-0201-00			RES.,FXD,CMPSN:200 OHM,5%,0.25W	01121	CB2015
R4176	321-0173-00			RES.,FXD,FILM:619 OHM,1%,0.125W	91637	MFF1816G619R0F
R4177	315-0821-00			RES.,FXD,CMPSN:820 OHM,5%,0.25W	01121	CB8215
R4179	321-0131-00			RES.,FXD,FILM:226 OHM,1%,0.125W	91637	MFF1816G226R0F
R4181	321-0185-00			RES.,FXD,FILM:825 OHM,1%,0.125W	91637	MFF1816G825R0F
R4182	315-0511-00			RES.,FXD,CMPSN:510 OHM,5%,0.25W	01121	CB5115
R4183	321-0164-00			RES.,FXD,FILM:499 OHM,1%,0.125W	91637	MFF1816G499R0F
R4184	315-0271-00			RES.,FXD,CMPSN:270 OHM,5%,0.25W	01121	CB2715
R4186	321-0173-00			RES.,FXD,FILM:619 OHM,1%,0.125W	91637	MFF1816G619R0F
R4187	315-0821-00			RES.,FXD,CMPSN:820 OHM,5%,0.25W	01121	CB8215
R4189	321-0131-00			RES.,FXD,FILM:226 OHM,1%,0.125W	91637	MFF1816G226R0F
R4193	315-0101-00			RES.,FXD,CMPSN:100 OHM,5%,0.25W	01121	CB1015
R4194	315-0101-00			RES.,FXD,CMPSN:100 OHM,5%,0.25W	01121	CB1015
R4195	315-0431-00			RES.,FXD,CMPSN:430 OHM,5%,0.25W	01121	CB4315
R4196	315-0470-00			RES.,FXD,CMPSN:47 OHM,5%,0.25W	01121	CB4705
R4198	321-0185-00			RES.,FXD,FILM:825 OHM,1%,0.125W	91637	MFF1816G825R0F
R4199	321-0185-00			RES.,FXD,FILM:825 OHM,1%,0.125W	91637	MFF1816G825R0F
R4202	315-0105-00			RES.,FXD,CMPSN:1M OHM,5%,0.25W	01121	CB1055
R4204	315-0241-00			RES.,FXD,CMPSN:240 OHM,5%,0.25W	01121	CB2415
R4205	321-0790-01			RES.,FXD,FILM:990K OHM,0.5%,0.125W	91637	HFF1104G99002D
R4206	315-0180-00			RES.,FXD,CMPSN:18 OHM,5%,0.25W	01121	CB1805
R4207	321-1289-01			RES.,FXD,FILM:10.1K OHM,0.5%,0.125W	91637	MFF1816G10101D
R4208	315-0330-00			RES.,FXD,CMPSN:33 OHM,5%,0.25W	01121	CB3305
R4214	321-0807-01			RES.,FXD,FILM:900K OHM,0.5%,0.125W	91637	HFF110F90002D
R4216	321-1389-01			RES.,FXD,FILM:111K OHM,0.5%,0.125W	91637	MFF1816G11102D
R4217	315-0100-00			RES.,FXD,CMPSN:10 OHM,5%,0.25W	01121	CB1005
R4218	315-0151-00			RES.,FXD,CMPSN:150 OHM,5%,0.25W	01121	CB1515

[1]T935 only

Ckt No.	Tektronix Part No.	Serial/Model No. Eff	Dscont	Name & Description	Mfr Code	Mfr Part Number
R4221	321-0481-00			RES.,FXD,FILM:1M OHM,1%,0.125W	91637	MFF1816G10003F
R4222	315-0474-00			RES.,FXD,CMPSN:470K OHM,5%,0.25W	01121	CB4745
R4224	321-0030-00			RES.,FXD,FILM:20 OHM,1%,0.125W	91637	MFF1816G20R00F
R4225	321-0030-00			RES.,FXD,FILM:20 OHM,1%,0.125W	91637	MFF1816G20R00F
R4227	315-0152-00			RES.,FXD,CMPSN:1.5K OHM,5%,0.25W	01121	CB1525
R4228[1]	315-0823-00	XB010330	B010415X	RES.,FXD,CMPSN:82K OHM,5%,0.25W	01121	CB8235
R4228[2]	315-0823-00	XB010330	B010431X	RES.,FXD,CMPSN:82K OHM,5%,0.25W	01121	CB8235
R4229[1]	315-0122-00	XB010330	B010415X	RES.,FXD,CMPSN:1.2K OHM,5%,0.25W	01121	CB1225
R4229[2]	315-0122-00	XB010330	B010431X	RES.,FXD,CMPSN:1.2K OHM,5%,0.25W	01121	CB1225
R4230	311-1559-00			RES.,VAR,NONWIR:10K OHM,20%,0.50W	73138	91A-10001M
R4231	315-0153-00			RES.,FXD,CMPSN:15K OHM,5%,0.25W	01121	CB1535
R4233	315-0151-00			RES.,FXD,CMPSN:150 OHM,5%,0.25W	01121	CB1515
R4236	321-0077-00			RES.,FXD,FILM:61.9 OHM,1%,0.125W	91637	MFF1816G61R90F
R4237	315-0152-00			RES.,FXD,CMPSN:1.5K OHM,5%,0.25W	01121	CB1525
R4243	321-0062-00			RES.,FXD,FILM:43.2 OHM,1%,0.125W	91637	MFF1816G43R20F
R4244	321-0114-00			RES.,FXD,FILM:150 OHM,1%,0.125W	91637	MFF1816G150R0F
R4245	321-0771-01			RES.,FXD,FILM:50 OHM,0.5%,0.125W	91637	MFF1816G50R00D
R4246	321-0771-01			RES.,FXD,FILM:50 OHM,0.5%,0.125W	91637	MFF1816G50R00D
R4247	321-0030-00			RES.,FXD,FILM:20 OHM,1%,0.125W	91637	MFF1816G20R00F
R4251	311-1563-00			RES.,VAR,NONWIR:1K OHM,20%,0.50W	73138	91A R1K
R4252	311-1785-00			RES.,VAR,NONWIR:1K OHM,5%,2W	12697	381-CM40945
R4254	321-0078-00			RES.,FXD,FILM:63.4 OHM,1%,0.125W	91637	MFF1816G63R40F
R4256	315-0621-00			RES.,FXD,CMPSN:620 OHM,5%,0.25W	01121	CB6215
R4257	321-0225-00			RES.,FXD,FILM:2.15K OHM,1%,0.125W	91637	MFF1816G21500F
R4258	315-0751-00			RES.,FXD,CMPSN:750 OHM,5%,0.25W	01121	CB7515
R4261	321-0154-00			RES.,FXD,FILM:392 OHM,1%,0.125W	91637	MFF1816G392R0F
R4262	321-0070-00			RES.,FXD,FILM:52.3 OHM,1%,0.125W	91637	MFF1816G52R30F
R4266	315-0682-00			RES.,FXD,CMPSN:6.8K OHM,5%,0.25W	01121	CB6825
R4267	321-0225-00			RES.,FXD,FILM:2.15K OHM,1%,0.125W	91637	MFF1816G21500F
R4268	315-0751-00			RES.,FXD,CMPSN:750 OHM,5%,0.25W	01121	CB7515
R4271	321-0185-00			RES.,FXD,FILM:825 OHM,1%,0.125W	91637	MFF1816G825R0F
R4272	315-0132-00			RES.,FXD,CMPSN:1.3K OHM,5%,0.25W	01121	CB1325
R4273	321-0164-00			RES.,FXD,FILM:499 OHM,1%,0.125W	91637	MFF1816G499R0F
R4274	321-0078-00			RES.,FXD,FILM:63.4 OHM,1%,0.125W	91637	MFF1816G63R40F
R4275	315-0201-00			RES.,FXD,CMPSN:200 OHM,5%,0.25W	01121	CB2015
R4276	321-0173-00			RES.,FXD,FILM:619 OHM,1%,0.125W	91637	MFF1816G619R0F
R4277	315-0821-00			RES.,FXD,CMPSN:820 OHM,5%,0.25W	01121	CB8215
R4279	321-0131-00			RES.,FXD,FILM:226 OHM,1%,0.125W	91637	MFF1816G226R0F
R4281	321-0185-00			RES.,FXD,FILM:825 OHM,1%,0.125W	91637	MFF1816G825R0F
R4282	315-0511-00			RES.,FXD,CMPSN:510 OHM,5%,0.25W	01121	CB5115
R4283	321-0164-00			RES.,FXD,FILM:499 OHM,1%,0.125W	91637	MFF1816G499R0F
R4284	315-0271-00			RES.,FXD,CMPSN:270 OHM,5%,0.25W	01121	CB2715
R4286	321-0173-00			RES.,FXD,FILM:619 OHM,1%,0.125W	91637	MFF1816G619R0F
R4287	315-0821-00			RES.,FXD,CMPSN:820 OHM,5%,0.25W	01121	CB8215
R4289	321-0131-00			RES.,FXD,FILM:226 OHM,1%,0.125W	91637	MFF1816G226R0F
R4293	315-0101-00			RES.,FXD,CMPSN:100 OHM,5%,0.25W	01121	CB1015
R4294	315-0101-00			RES.,FXD,CMPSN:100 OHM,5%,0.25W	01121	CB1015
R4295	315-0431-00			RES.,FXD,CMPSN:430 OHM,5%,0.25W	01121	CB4315
R4296	315-0470-00			RES.,FXD,CMPSN:47 OHM,5%,0.25W	01121	CB4705
R4298	321-0185-00			RES.,FXD,FILM:825 OHM,1%,0.125W	91637	MFF1816G825R0F
R4299	321-0185-00			RES.,FXD,FILM:825 OHM,1%,0.125W	91637	MFF1816G825R0F
R4301	315-0103-00			RES.,FXD,CMPSN:10K OHM,5%,0.25W	01121	CB1035
R4302	315-0103-00			RES.,FXD,CMPSN:10K OHM,5%,0.25W	01121	CB1035

[1] T932 only
[2] T935 only

Ckt No.	Tektronix Part No.	Serial/Model No. Eff	Dscont	Name & Description	Mfr Code	Mfr Part Number
R4303	315-0103-00			RES.,FXD,CMPSN:10K OHM,5%,0.25W	01121	CB1035
R4307	315-0203-00			RES.,FXD,CMPSN:20K OHM,5%,0.25W	01121	CB2035
R4308	315-0203-00			RES.,FXD,CMPSN:20K OHM,5%,0.25W	01121	CB2035
R4312	315-0472-00			RES.,FXD,CMPSN:4.7K OHM,5%,0.25W	01121	CB4725
R4315	315-0181-00			RES.,FXD,CMPSN:180 OHM,5%,0.25W	01121	CB1815
R4318	315-0103-00			RES.,FXD,CMPSN:10K OHM,5%,0.25W	01121	CB1035
R4321	315-0472-00			RES.,FXD,CMPSN:4.7K OHM,5%,0.25W	01121	CB4725
R4322	315-0472-00			RES.,FXD,CMPSN:4.7K OHM,5%,0.25W	01121	CB4725
R4331	315-0101-00			RES.,FXD,CMPSN:100 OHM,5%,0.25W	01121	CB1015
R4334[1]	315-0431-00	B010100	B010724	RES.,FXD,CMPSN:430 OHM,5%,0.25W	01121	CB4315
R4334[1]	321-0158-00	B010725		RES.,FXD,FILM:432 OHM,1%,0.125W	91637	MFF1816G432R0F
R4334[2]	315-0431-00	B010100	B010749	RES.,FXD,CMPSN:430 OHM,5%,0.25W	01121	CB4315
R4334[2]	321-0158-00	B010750		RES.,FXD,FILM:432 OHM,1%,0.125W	91637	MFF1816G432R0F
R4337	321-0203-00			RES.,FXD,FILM:1.27K OHM,1%,0.125W	91637	MFF1816G12700F
R4338	315-0621-00			RES.,FXD,CMPSN:620 OHM,5%,0.25W	01121	CB6215
R4341	315-0101-00			RES.,FXD,CMPSN:100 OHM,5%,0.25W	01121	CB1015
R4344[1]	315-0361-00	B010100	B010724	RES.,FXD,CMPSN:360 OHM,5%,0.25W	01121	CB3615
R4344[1]	321-0151-00	B010725		RES.,FXD,FILM:365 OHM,1%,0.125W	91637	MFF1816G365R0F
R4344[2]	315-0361-00	B010100	B010749	RES.,FXD,CMPSN:360 OHM,5%,0.25W	01121	CB3615
R4344[2]	321-0151-00	B010750		RES.,FXD,FILM:365 OHM,1%,0.125W	91637	MFF1816G365R0F
R4346	311-1811-00			RES.,VAR,NONWIR:1K OHM,20%,0.50W	12697	470-CM40953
R4347	321-0222-00			RES.,FXD,FILM:2K OHM,1%,0.125W	91637	MFF1816G20000F
R4348	315-0470-00			RES.,FXD,CMPSN:47 OHM,5%,0.25W	01121	CB4705
R4349[1]	315-0621-00	XB010725		RES.,FXD,CMPSN:620 OHM,5%,0.25W	01121	CB6215
R4349[2]	315-0621-00	XB010750		RES.,FXD,CMPSN:620 OHM,5%,0.25W	01121	CB6215
R4356	311-1811-00			RES.,VAR,NONWIR:1K OHM,20%,0.50W	12697	470-CM40953
R4357	321-0222-00			RES.,FXD,FILM:2K OHM,1%,0.125W	91637	MFF1816G20000F
R4358	315-0470-00			RES.,FXD,CMPSN:47 OHM,5%,0.25W	01121	CB4705
R4359[1]	315-0621-00	XB010725		RES.,FXD,CMPSN:620 OHM,5%,0.25W	01121	CB6215
R4359[2]	315-0621-00	XB010750		RES.,FXD,CMPSN:620 OHM,5%,0.25W	01121	CB6215
R4368	323-0131-00			RES.,FXD,FILM:226 OHM,1%,0.50W	75042	CECT0-2260F
R4373	321-0120-00			RES.,FXD,FILM:174 OHM,1%,0.125W	91637	MFF1816G174R0F
R4375	315-0430-00			RES.,FXD,CMPSN:43 OHM,5%,0.25W	01121	CB4305
R4376	323-0162-00			RES.,FXD,FILM:475 OHM,1%,0.50W	75042	CECT0-4750F
R4377	321-0120-00			RES.,FXD,FILM:174 OHM,1%,0.125W	91637	MFF1816G174R0F
R4378	315-0750-00			RES.,FXD,CMPSN:75 OHM,5%,0.25W	01121	CB7505
R4383	321-0120-00			RES.,FXD,FILM:174 OHM,1%,0.125W	91637	MFF1816G174R0F
R4385	315-0430-00			RES.,FXD,CMPSN:43 OHM,5%,0.25W	01121	CB4305
R4386	323-0162-00			RES.,FXD,FILM:475 OHM,1%,0.50W	75042	CECT0-4750F
R4387	321-0120-00			RES.,FXD,FILM:174 OHM,1%,0.125W	91637	MFF1816G174R0F
R4388	315-0750-00			RES.,FXD,CMPSN:75 OHM,5%,0.25W	01121	CB7505
R4396	311-1563-00			RES.,VAR,NONWIR:1K OHM,20%,0.50W	73138	91A R1K
R4397	311-1561-00			RES.,VAR,NONWIR:2.5K OHM,20%,0.50W	73138	91A R2500
R4398	315-0103-00			RES.,FXD,CMPSN:10K OHM,5%,0.25W	01121	CB1035
R4411	315-0470-00			RES.,FXD,CMPSN:47 OHM,5%,0.25W	01121	CB4705
R4415	315-0161-00			RES.,FXD,CMPSN:160 OHM,5%,0.25W	01121	CB1615
R4416	315-0470-00			RES.,FXD,CMPSN:47 OHM,5%,0.25W	01121	CB4705
RT4175	307-0127-00			RES.,THERMAL:1K OHM,10%	50157	2D1596
RT4275	307-0127-00			RES.,THERMAL:1K OHM,10%	50157	2D1596
S100	260-1421-00			SWITCH,PUSH:1 STA,MOMENTARY,NON-SHORT	80009	260-1421-00
S700	260-1768-00			SWITCH,PUSH:DPDT,3A,125VAC	82389	14S-7102C
S701	260-1776-00			SWITCH,SLIDE:DPDT,3A,125VAC	80009	260-1776-00

[1]T932 only
[2]T935 only

Ckt No.	Tektronix Part No.	Serial/Model No. Eff	Dscont	Name & Description	Mfr Code	Mfr Part Number
S705	260-1776-00			SWITCH,SLIDE:DPDT,3A,125VAC	80009	260-1776-00
S2100	214-2288-02			LEVER,SWITCH:STYLE A,17.5 DEG,W/CONTACTS	80009	214-2288-02
S2140	260-1445-01			SWITCH,PUSH:1 BUTTON	80009	260-1445-01
S2150[1]	214-2289-02			LEVER,SWITCH:STYLE B,W/CONTACTS	80009	214-2289-02
S2250[1,2]						
S2510[3]	260-1268-00			SWITCH,PUSH:3 BUTTON,2 POLE,INTERLOCK	80009	260-1268-00
S2550A,B[3,4]						
S4100[1]	105-0678-00	B010100	B010831	DRUM,CAM SWITCH:W/LEVER	80009	105-0678-00
S4100[1]	105-0678-01	B010832		DRUM,CAM SWITCH:AC-DC GND,CHANNEL 1	80009	105-0678-01
S4100[3]	105-0678-00	B010100	B010961	DRUM,CAM SWITCH:W/LEVER	80009	105-0678-00
S4100[3]	105-0678-01	B010962		DRUM,CAM SWITCH:AC-DC GND,CHANNEL 1	80009	105-0678-01
S4200[1]	105-0678-00	B010100	B010831	DRUM,CAM SWITCH:W/LEVER	80009	105-0678-00
S4200[1]	105-0678-02	B010832		DRUM,CAM SWITCH:W/LEVER	80009	150-0678-02
S4200[3]	105-0678-00	B010100	B010961	DRUM,CAM SWITCH:W/LEVER	80009	105-0678-00
S4200[3]	105-0678-02	B010962		DRUM,CAM SWITCH:W/LEVER	80009	105-0678-02
S4110	105-0679-00			DRUM,CAM SWITCH:	80009	105-0679-00
S4200	105-0678-00			DRUM,CAM SWITCH:W/LEVER	80009	105-0678-00
S4210	105-0679-00			DRUM,CAM SWITCH:	80009	105-0679-00
S4320	260-1782-00			SWITCH,PUSH:3 BUTTON,DPDT,10MM	80009	260-1782-00
T460	120-0996-00			XFMR,PWR,STU:HIGH VOLTAGE	80009	120-0996-00
T700	120-0994-00			XFMR,PWR,STPDN:	80009	120-0994-00
U24	156-0067-10			MICROCIRCUIT,LI:OPERATIONAL AMPLIFIER	80009	156-0067-10
U460	152-0637-02			SEMICOND DEVICE:SI,HV MULTR,6.6KV-10KV	80009	152-0637-02
U742A,B	156-0158-00			MICROCIRCUIT,LI:DUAL OPERATIONAL AMPLIFIER	80009	156-0158-00
U2156	156-0080-00			MICROCIRCUIT,DI:QUAD 2-INPUT NAND GATE	80009	156-0180-00
U2212	156-0080-00			MICROCIRCUIT,DI:QUAD 2-INPUT NAND GATE	80009	156-0080-01
U2224A,B	156-0405-01			MICROCIRCUIT,DI:DUAL RETRIG ONE-SHOT	80009	156-0405-01
U2234	156-0080-00			MICROCIRCUIT,DI:QUAD 2-INPUT NAND GATE	80009	156-0180-00
U2524	156-0030-00			MICROCIRCUIT,DI:QUAD 2-INPUT POS NAND GATE	01295	SN7400N
U4134	156-0197-00			MICROCIRCUIT,LI:5 TRANSISTOR ARRAY	80009	156-0197-00
U4234	156-0197-00			MICROCIRCUIT,LI:5 TRANSISTOR ARRAY	80009	156-0197-00
U4306	156-0113-01			MICROCIRCUIT,DI:QUAD 2-INPUT POS NAND GATE	80009	156-0113-01
U4324	156-0388-01			MICROCIRCUIT,DI:DUAL D-TYPE FLIP-FLOP	80009	156-0388-01
V470	154-0729-00			ELECTRON TUBE:P31,INT SCALE,	80009	154-0729-00
VR412	152-0280-00			SEMICOND DEVICE:ZENER,0.4W,6.2V,5%	80009	152-0280-00
VR746	152-0306-00			SEMICOND DEVICE:ZENER,0.4W,9.1V,5%	81483	1N960B
VR762	152-0195-00			SEMICOND DEVICE:ZENER,0.4W,5.1V,5%	80009	152-0195-00
VR784	152-0293-00			SEMICOND DEVICE:ZENER,1W,33V,5%	04713	1N3032B
VR2116	152-0279-00			SEMICOND DEVICE:ZENER,0.4W,5.1V,5%	80009	152-0279-00
VR2392	152-0279-00			SEMICOND DEVICE:ZENER,0.4W,5.1V,5%	80009	152-0279-00
VR2590[3]	152-0195-00			SEMICOND DEVICE:ZENER,0.4W,5.1V,5%	80009	152-0195-00
VR4184	152-0195-00			SEMICOND DEVICE:ZENER,0.4W,5.1V,5%	80009	152-0195-00
VR4284	152-0195-00			SEMICOND DEVICE:ZENER,0.4W,5.1V,5%	80009	152-0195-00
VR4338	152-0395-00			SEMICOND DEVICE:ZENER,0.4W,4.3V,5%	04713	1N749A
VR4415	152-0195-00			SEMICOND DEVICE:ZENER,0.4W,5.1V,5%	80009	152-0195-00
W2310[1]	131-0566-00	XB011794		LINK,TERM.CONNE:0.086 DIA X 2.375 INCH L	55210	ERD-18T0
W2310[3]	131-0566-00	XB012319		LINK,TERM.CONNE:0.086 DIA X 2.375 INCH L	55210	ERD-18T0
W2314[1]	131-0566-00	XB011794		LINK,TERM.CONNE:0.086 DIA X 2.375 INCH L	55210	ERD-18T0
W2314[3]	131-0566-00	XB012319		LINK,TERM.CONNE:0.086 DIA X 2.375 INCH L	55210	ERD-18T0

[1]T932 only
[2]Replaceable only as part of A13, 672-0551-00.
[3]T935 only
[4]Replaceable only as part of A13/A14 672-0533-00.

DIAGRAMS AND CIRCUIT DESCRIPTIONS

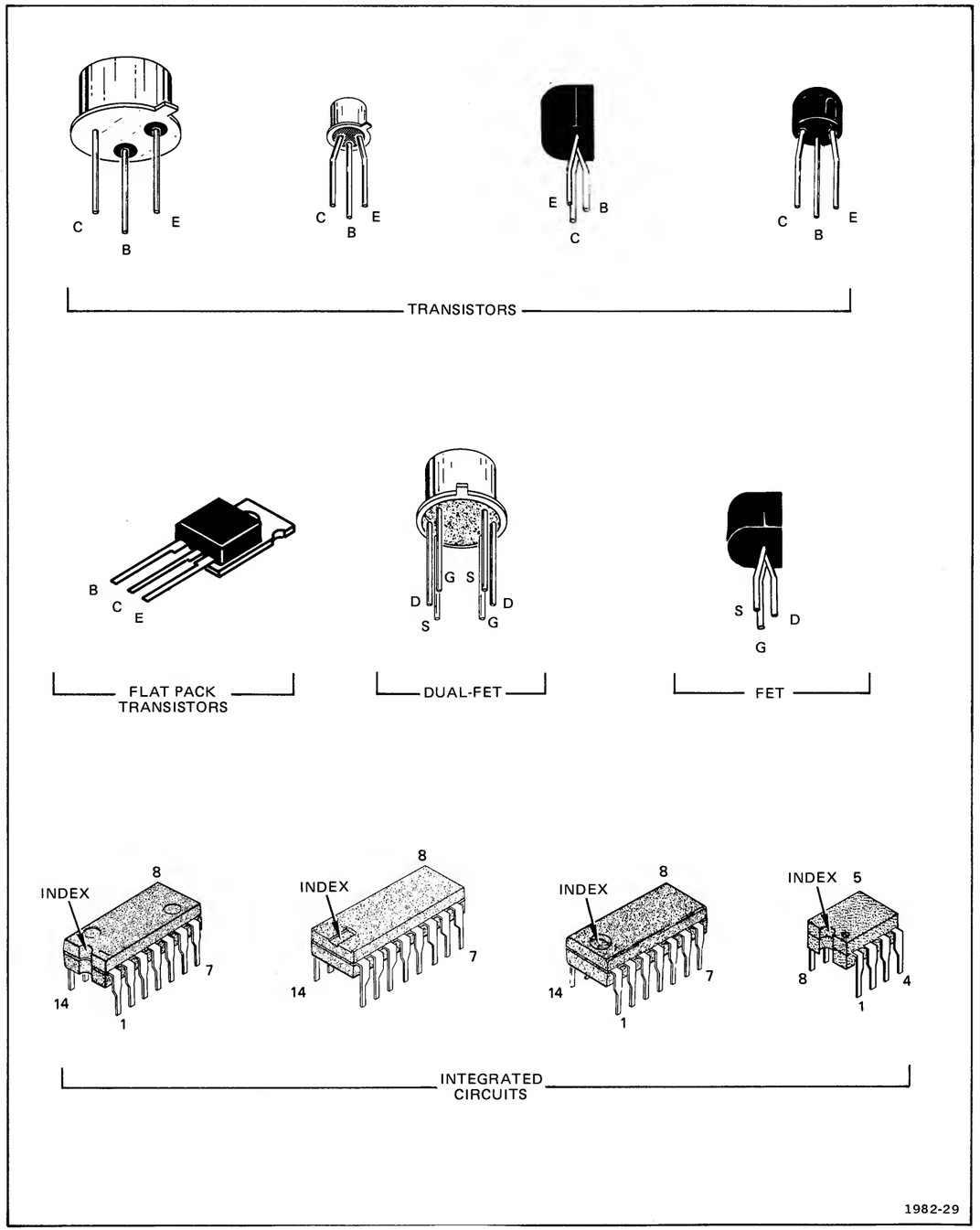

Fig. 7-1. Lead configuration for semiconductor devices.

Symbols and Reference Designators

Electrical components shown on the diagrams are in the following units unless noted otherwise:

Capacitors = Values one or greater are in picofarads (pF).
Values less than one are in microfarads (μF).
Resistors = Ohms (Ω).

Graphic symbols and class designation letters are based on ANSI Standard Y32.2-1975.

Logic symbology is based on ANSI Y32.14-1973 in terms of positive logic. Logic symbols depict the logic function performed and may differ from the manufacturer's data.

The overline on a signal name indicates that the signal performs its intended function when it goes to the low state.

Abbreviations are based on ANSI Y1.1-1972.

Other ANSI standards that are used in the preparation of diagrams by Tektronix, Inc. are:

Y14.15, 1966	Drafting Practices.
Y14.2, 1973	Line Conventions and Lettering.
Y10.5, 1968	Letter Symbols for Quantities Used in Electrical Science and Electrical Engineering.

The following prefix letters are used as reference designators to identify components or assemblies on the diagrams.

A	Assembly, separable or repairable (circuit board, etc)
AT	Attenuator, fixed or variable
B	Motor
BT	Battery
C	Capacitor, fixed or variable
CB	Circuit breaker
CR	Diode, signal or rectifier
DL	Delay line
DS	Indicating device (lamp)
E	Spark Gap, Ferrite bead
F	Fuse
FL	Filter
H	Heat dissipating device (heat sink, heat radiator, etc)
HR	Heater
HY	Hybrid circuit
J	Connector, stationary portion
K	Relay
L	Inductor, fixed or variable
M	Meter
P	Connector, movable portion
Q	Transistor or silicon-controlled rectifier
R	Resistor, fixed or variable
RT	Thermistor
S	Switch or contactor
T	Transformer
TC	Thermocouple
TP	Test point
U	Assembly, inseparable or non-repairable (integrated circuit, etc.)
V	Electron tube
VR	Voltage regulator (zener diode, etc.)
W	Wirestrap or cable
Y	Crystal
Z	Phase shifter

The following special symbols may appear on the diagrams:

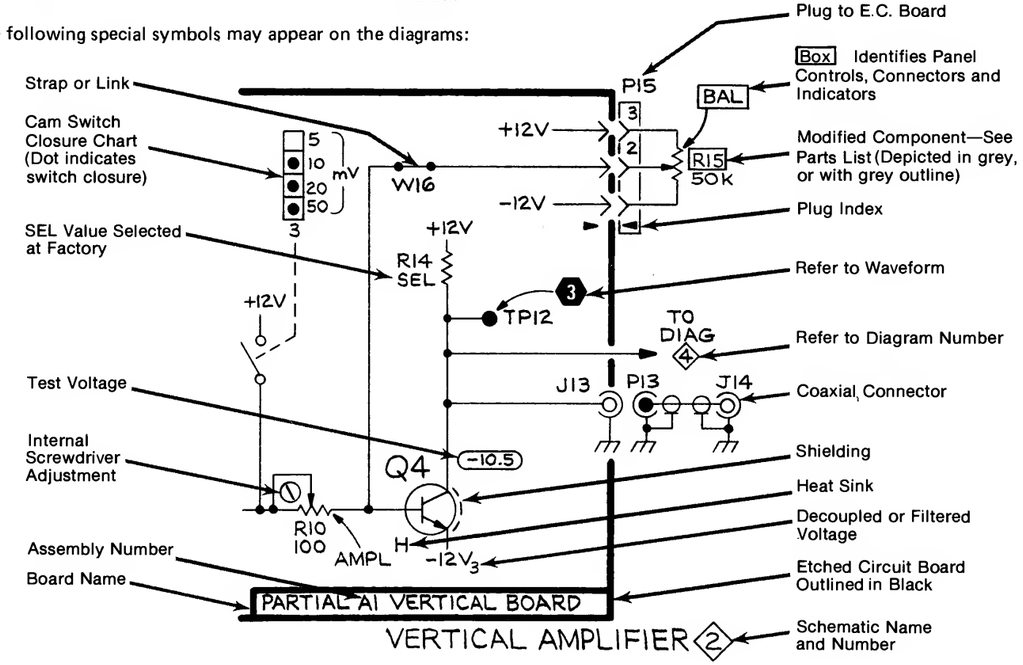

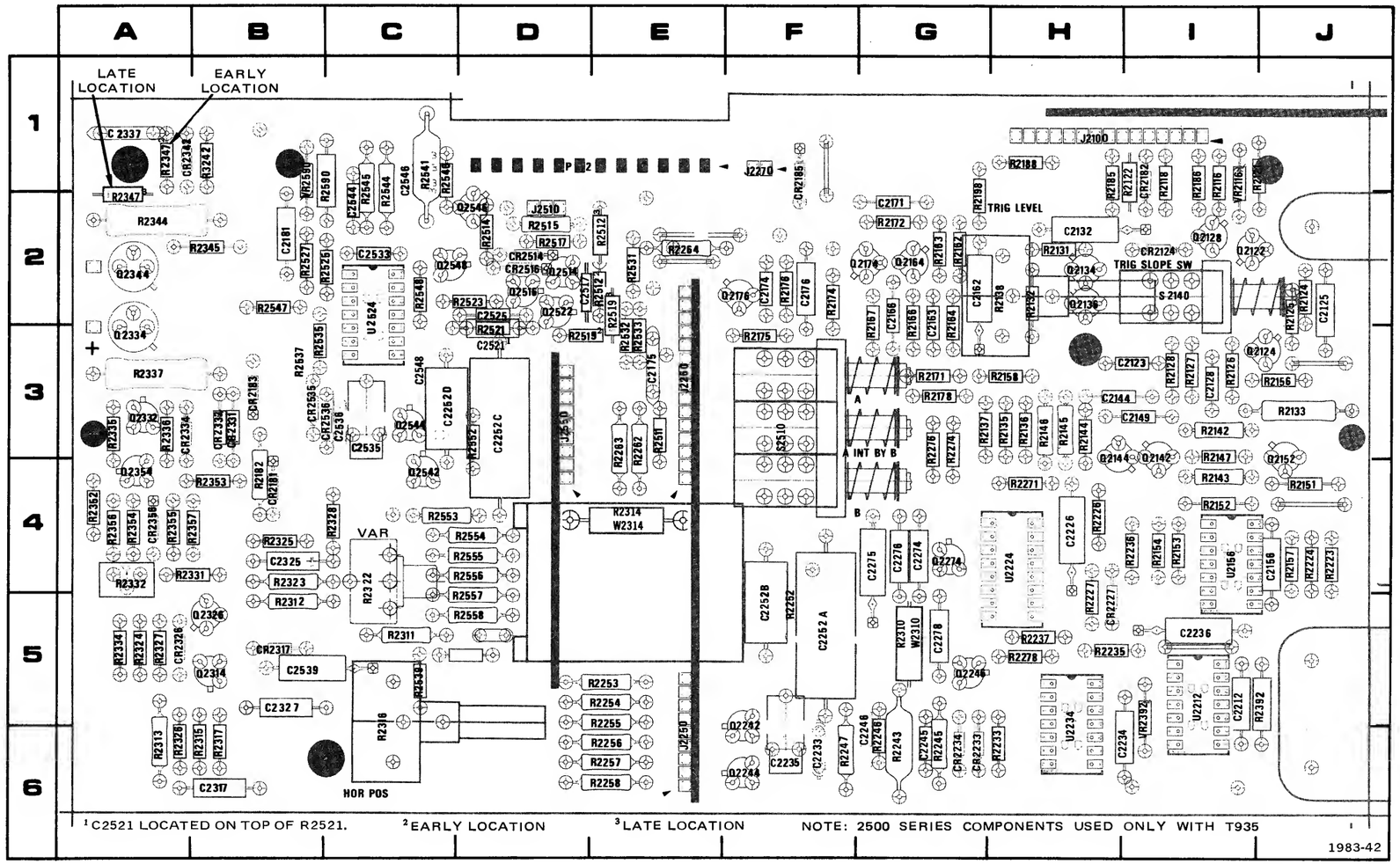

NOTE: ONLY A12 BOARD COMPONENTS ARE SHOWN SINCE OTHER BOARDS HAVE CIRCUIT NUMBERS MARKED ON BOARD.

Fig. 7-2. A12—Horizontal circuit board component locations.

*See Parts List for serial number ranges.

CKT NO	GRID COORD	CKT NO	GRID COORD	CKT NO	GRID COORD	CKT NO	GRID COORD
C2123	3I	CR2535	3B	R2152	4I	R2332	4A
C2125	2J	CR2536	3B	R2153	4I	R2334	5A
C2128	3I			R2154	4I	R2335	3A
C2132	2H	J2100	1H	R2156	3I	R2336	3A
C2144	3H	J2250	6E	R2157	4J	R2337	3A
C2149	3F	J2260	3E	R2158	3H	R2342	1B
C2156	4J	J2270	1F	R2162	2G	R2344	2A
C2162	2G	J2510	2D	R2163	2G	R2345	2B
C2163	2G	J2550	3D	R2164	2G	R2347	1A[2,3]
C2166	2G			R2166	2G	R2352	4A
C2171	2G	P2	1D	R2167	2G	R2353	4B
C2174	2F			R2171	3G	R2354	4A
C2175	3E	Q2122	2I	R2172	2G	R2355	4A
C2176	2F	Q2124	3J	R2174	2F	R2356	4A
C2181	2B	Q2128	2I	R2175	3F	R2357	4B
C2212	5I	Q2134	2H	R2176	2F	R2392	5J
C2226	4H	Q2136	2H	R2178	3G	R2511	3E
C2233	6F	Q2142	3I	R2182	4B	R2512	2E
C2234	6I	Q2144	3H	R2185	1H	R2514	2D
C2235	6F	Q2152	3J	R2186	1I	R2515	2D
C2236	5I	Q2164	2G	R2188	1H	R2517	2D
C2245	6G	Q2174	2G	R2198	2G	R2519	3D[2]
C2246*	6G	Q2176	2F	R2223	4J	R2519	2E[3]
C2252A	5F	Q2242	6F	R2224	4J	R2521	3D
C2252B	5F	Q2244	6F	R2226	4H	R2523	2D
C2252C	3D	Q2246	5G	R2227	5H	R2525	2B
C2252D	3C	Q2274	4G	R2233	6H	R2527	2B
C2274	4G	Q2314	5B	R2235	5H	R2531	2E
C2275	4G	Q2326	5B	R2236	4I	R2532	3E
C2276	4G	Q2332	3A	R2237	5H	R2533	3E
C2278	5G	Q2334	3A	R2243	6G	R2535	3B
C2317	6B	Q2344	2A	R2245	6G	R2537	3B
C2325	4B	Q2354	4A	R2246	6G	R2539	5C
C2327	5B	Q2514	2D	R2247	6F	R2541	1C
C2337	1A	Q2516	2D	R2252	5F	R2544	1C
C2517*	2D	Q2522	2D	R2253	5E	R2545	1C
C2521[1]	3D	Q2542	4C	R2254	5E	R2546	1C
C2525	2D	Q2544	3C	R2255	5E	R2547	2B
C2533	2C	Q2546	2D	R2256	6E	R2548	2C
C2535	3C	Q2548	2C	R2257	6E	R2552	3D
C2536	3C			R2258	6E	R2553	4C
C2546*	1C	R2116	1I	R2262	3E	R2554	4D
C2539	5B	R2118	1I	R2263	3E	R2555	4D
C2544	2C	R2121	1J	R2264	2E	R2556	4D
C2546	1C	R2122*	1I	R2271	4H	R2557	5D
C2548	3C	R2124	2J	R2274	3G	R2558	5D
		R2125	2J	R2276	3G	R2590	1B
CR2124	2I	R2126	3I	R2278	5H		
CR2181	4B	R2127	3I	R2310*	5G	S2140	2I
CR2182	1I	R2128	3I	R2311	5C	S2510	3F
CR2183	3B	R2131	2H	R2312	5B		
CR2185	1F	R2132	2H	R2313	6A	U2212	5I
CR2227	5H	R2133	3J	R2314*	4E	U2224	4H
CR2233	6G	R2135	3H	R2315	6B	U2234	6H
CR2234	6G	R2136	3H	R2316	6C	U2156	4I
CR2317	5B	R2137	3G	R2317	6B	U2524	2C
CR2326	5A	R2138	2H	R2322	4C		
CR2331	3B	R2142	3I	R2323	4B	VR2116	1I
CR2332	3B	R2143	4I	R2324	5A	VR2392	5I
CR2334	3A	R2144	3H	R2325	4B	VR2590	1B
CR2342	1A	R2145	3H	R2326	6A	W2310	5G
CR2356	4A	R2146	3H	R2327	5A	W2314	4E
CR2514	2D	R2147	3I	R2328	4C		
CR2516	2D	R2151	4J	R2331	4B		

Signals to
the channel
signals are a
preamplifier
attenuators,
and gain adj

A Trigger
sample of th
Amplifier vi
SOURCE sw

The Verti
supplies the
through the
the preampli
output of ea
Delay Line D
Gate circuits
circuit to sele
from the Ve
Blanking Pu
Amplifier to
(SEC/DIV at
(via the Alte
display betw
alternate mo

The verti
Driver throu
Amplifier. Th
delay in th
generator cir
signal reach
Vertical Outp
the signal to
section of t
causes the di
off-screen di
circuitry.

I.1

BLOCK DIAGRAM DESCRIPTION

VERTICAL INPUT

Signals to be displayed on the crt are applied to either the channel 1 (Y) or channel 2 input connector. The input signals are amplified by the preamplifier circuits. Each preamplifier circuit includes separate input coupling, attenuators, gain switching, variable attenuators, balance, and gain adjustments.

A Trigger Pickoff circuit in each channel supplies a sample of the vertical input signal to the Trigger Input Amplifier via the Trigger Switching circuit and the SOURCE switch.

VERTICAL SWITCHING

The Vertical Mode switch selects which channel supplies the trigger signal. The vertical signal passes through the Input Buffer Amplifier circuit which isolates the preamplifier circuits from the Delay Line Driver. The output of each Input Buffer Amplifier is connected to the Delay Line Driver through a Diode Gate circuit. The Diode Gate circuits are controlled by the Vertical Switching circuit to select the channel(s) to be displayed. An output from the Vertical Switching circuit (through the Chop Blanking Pulse Generator) is connected to the Z Axis Amplifier to blank switching transients in the chop mode (SEC/DIV at 1 ms or slower). A sync pulse from the sweep (via the Alternate Sync Pulse Amplifier) switches the display between channels at the end of each sweep in the alternate mode (SEC/DIV at .5 ms or faster).

VERTICAL AMPLIFIER

The vertical input signal goes from the Delay Line Driver through the Delay Line to the Vertical Output Amplifier. The Delay Line provides approximately 120 ns delay in the vertical signal. This allows the sweep generator circuit time to initiate a sweep before the vertical signal reaches the crt vertical deflection plates. The Vertical Output Amplifier provides final amplification of the signal to drive the crt vertical deflection plates. One section of the BEAM FINDER switch, when pressed, causes the display to compress vertically to aid in locating off-screen displays. Another section affects the horizontal circuitry.

TRIGGER

The Trigger circuit produces a logic triggering signal to trigger the sweep. Trigger signals are selected by the SOURCE switch from three sources: external trigger (via the External Trigger Input Buffer circuit), vertical amplifier input signal (internal), or the line voltage at the secondary of T700. (No trigger signal is produced during X-Y operation.)

The selected trigger signal is amplified and inverted by the Trigger Input Amplifier. The trigger signal passes through coupling capacitor, C2132, to the Trigger Level Comparator, which determines the voltage level (on the trigger waveform) at which triggering occurs. The SLOPE switch determines whether the sweep triggers on the positive-going or negative-going portion of the trigger signal. For TV signals, the SLOPE switch determines whether the sweep triggers from positive or negative sync polarity. The Trigger Level comparator also supplies a signal to the TV Sync Separator circuit.

Two Schmitt Trigger circuits produce the logic trigger signal; one is for conventional trigger signals and the other is for TV signals. The MODE switch selects which Schmitt Trigger circuit is operating.

A SWEEP AND HORIZONTAL AMPLIFIER

The A Sweep circuit, when triggered by the Trigger circuit, produces a linear sawtooth output signal to the Horizontal Amplifier. The slope of the sawtooth is controlled by the SEC/DIV switch. When the sawtooth output reaches a predetermined level, the Hold-off Circuit resets the A Sweep circuit, blanks the crt (through the Z Axis Amplifier) and prevents subsequent triggers from initiating another sweep until the sweep reset is completed.

The sawtooth output from the Sweep circuit is amplified by the Horizontal Output Amplifier circuit to produce horizontal deflection on the crt. When the SOURCE switch is in the X-Y position, the X signal, from the External Trigger Input Buffer, is applied to the Horizontal Amplifier. One section of the BEAM FINDER switch, when pressed, causes the display to compress horizontally to aid in locating off-screen displays.

B SWEEP

The B Sweep circuit produces a linear sawtooth output signal to the Horizontal Amplifier after a delay. The length of the delay is determined by the DELAY TIME POSITION control. The output signal from the A sweep circuit triggers the B sweep circuit. The DISPLAY MODE switch selects A, A INTEN BY B, or B (delayed) modes. In the A INTEN BY B mode, the B sweep intensifies a portion of the A sweep.

CRT CIRCUIT

The Z Axis Amplifer determines the crt intensity and blanking. The Z Axis Amplifier sums the current inputs from several sources: INTENSITY control, X-Y intensity limit, unblanking signal from sweep circuit, chop blanking signal from the Vertical Switching circuit, and EXT Z AXIS INPUT connector, J419.

Output of the Z Axis circuit controls the trace intensity through the HV circuit. The HV circuit provides the voltages (greater than 100 V) necessary for operation of the crt.

The Probe Adjust Generator provides a square-wave voltage output for checking voltage probes.

POWER SUPPLY

The Power Supply circuits provide the low-voltage power necessary for operation of the instrument.

HIGH-VOLTAGE REGULATOR

Transistors Q446-Q454 and associated circuitry control the output voltage of the High Voltage supply. Components R443 and C443 provide a slow start up for the high-voltage oscillator. When the instrument is turned on, the +100 V supply charges C443 through R443. The voltage increases until it is sufficient to forward bias CR443, holding the voltage at slightly above +8 volts. This forms the reference for the high-voltage regulator.

The resulting current in R444A (100 μA) turns on Q446 and Q454, providing base current for Q458. This starts the high voltage oscillator, causing a negative voltage to develop at the crt cathode.

Resistors R444B, C, D, and R468 sample the cathode voltage. The high voltage increases until the cathode voltage is −2000 V, At this point the current in R444B is approximately the same as the current in R444A with Q446 barely conducting.

Any change in the level at the base of Q446 produces an error signal at the collector of Q446, which is amplified by Q454 and applied to the base of Q458 through the feedback winding of T460. Regulation occurs as follows:

If the cathode voltage at the −2000 V point starts to go positive (less negative), this positive-going change is applied to the base of Q446. Q446 conducts harder, which in turn causes Q454 to conduct harder. This results in greater bias current to the base of Q458 through the feedback winding of T460. Now Q458 is biased closer to its conduction level so that it comes into conduction sooner to produce a larger induced voltage in the secondary of T460. This increased voltage appears as a more negative voltage at the crt cathode to correct the original positive-going change. By sampling the output from the crt cathode supply in this manner, the total output of the high-voltage supply is held relatively constant.

Components, R445 and C445, damp the response of the regulator against fast changes in the load such as when the crt is unblanked at the beginning of the sweep.

Resistors, R446, R453, and R457, help prevent instabilities in the high-voltage oscillator.

HIGH-VOLTAGE RECTIFIERS AND OUTPUT

The high-voltage transformer, T460, has 3 output windings. One winding provides about 6.3 V for the crt filament. The crt filament is referenced to the cathode voltage (≈−2 kV), preventing cathode-to-filament breakdown. A second winding provides high ac voltage to the multiplier, U460, to produce a 10 kV crt anode accelerating voltage. The same winding is tapped and rectified by CR465 to produce the dc voltage for the crt cathode. Components C465, R465, and C466 filter the dc voltage.

The third winding is used to control the crt intensity. Components CR463, C462, C463, C464, R462, and R463 rectify and filter the secondary voltage to provide approximately −2100 V which is applied to the crt grid. The entire winding is referenced to the output of the Z axis amplifier whose output voltage variations are used to control the crt intensity by varying the grid to cathode voltage. The dc path for the Z axis signal to the grid is through R462, CR463, R463 and the transformer winding. Resistor R462 isolates the transformer capacitance from the Z axis Amplifier. Capacitors C463 and C464 provide a path for fast changes in the Z axis output to the crt grid. Resistor R464 provides a discharge path for C462, C463, and C464. Glow lamps DS463 and DS465 prevent the grid-to-cathode voltage from rising high enough to cause breakdown within the crt during turn-on or when the cathode or grid is shorted to ground.

CRT CONTROL CIRCUITS

Crt display focus is controlled by FOCUS control R468. ASTIG adjustment R477, which is used in conjunction with the FOCUS control to provide a well-defined display, varies the voltage on the astigmatism grid. Geometry adjustment, R473, varies the voltage on the horizontal deflection plate shields to control the overall geometry of the display.

Two adjustments control the trace alignment by varying the magnetic field around the crt. Y axis adjustment, R474, controls the current through L470, which affects the crt beam after vertical deflection but before horizontal deflection. Therefore, it affects only the vertical (Y) components of the display. Trace Rotation (TR ROT) adjustment, R472, controls the current through L472 and affects both vertical and horizontal rotation of the beam.

R475 and R476 provide the proper voltage for the vertical plate shield and R478 and C478 decouple the first accelerator electrode from the +33 V supply.

II.3

VOLTAGE AND WAVEFORM CONDITIONS

VOLTAGE CONDITIONS

Voltages shown on this diagram were measured with a Tektronix DM 501 Digital Multimeter. Voltage measurements can vary as much as ±20%. No signals were applied to the vertical inputs or to the X (external trigger) input. Refer to Waveform Conditions for T932 or T935 control settings. In the crt circuit, set the INTENSITY control for a voltage measurement of +22 volts at the collector of Q426 and of Q434 before attempting to measure voltages in the rest of the circuit.

WAVEFORM CONDITIONS

Waveforms below were monitored with a Tektronix 7704A Oscilloscope, 7B71 Time Base, 7A15A Amplifier, and 10X probe. The oscilloscope input coupling was set to ac. Waveforms vary as much as ±20%.

A 50 kHz, 100 mV sine wave was applied to the CH 1 input and a 50 kHz, 2 V square wave was applied to the CH 2 input. A Tektronix FG 501 Function Generator provides either of the input waveforms.

The T932 or T935 controls were set as follows:

SOURCE	INT
MODE	AUTO
Vertical Mode	DUAL TRACE
CH 1 VOLTS/DIV	50 mV
CH 2 VOLTS/DIV	1 V
VAR (both)	Detent
AC-GND-DC (both)	DC
DISPLAY MODE	A
A & B SEC/DIV	10 μs
1X-10X	1X
HOLD-OFF	Fully ccw
LEVEL	For triggered display

The other controls were set as necessary to obtain the desired display.

1

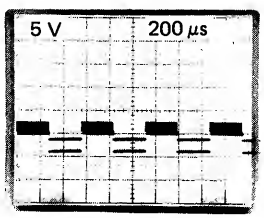

WAVEFORM POSITIONS VARY WITH POSITION CONTROL SETTINGS

2

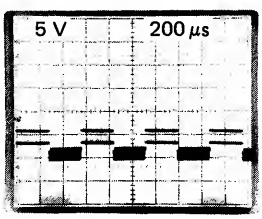

WAVEFORM POSITIONS VARY WITH POSITION CONTROL SETTINGS

3

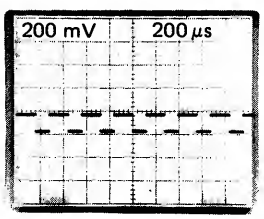

4

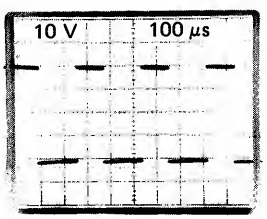

PULSE AMPLITUDE VARIES WITH INTENSITY CONTROL SETTING

5

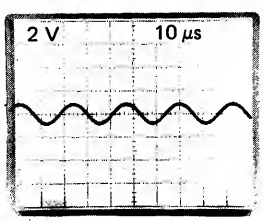

SET INTENSITY FULLY CCW

6

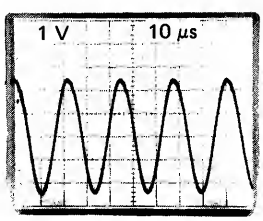

7

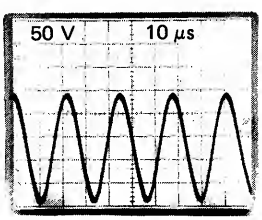

XT Z AXIS

e intensity
vides the
eration of

uare-wave

w-voltage
nt.

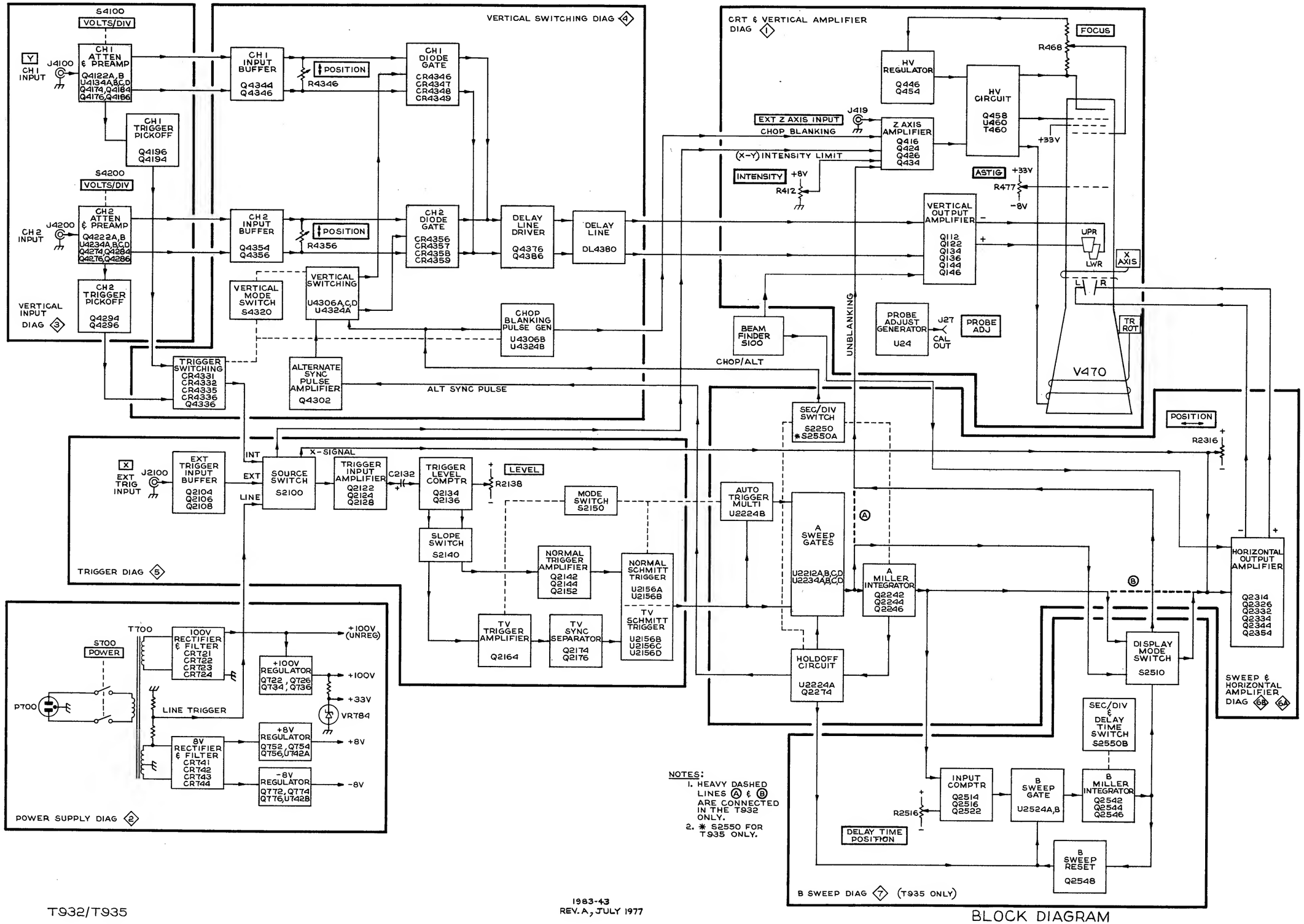

NOTES:
1. HEAVY DASHED LINES Ⓐ & Ⓑ ARE CONNECTED IN THE T932 ONLY.
2. * S2550 FOR T935 ONLY.

BLOCK DIAGRAM

T932/T935

1983-43
REV. A, JULY 1977

BLOCK DIAGRAM

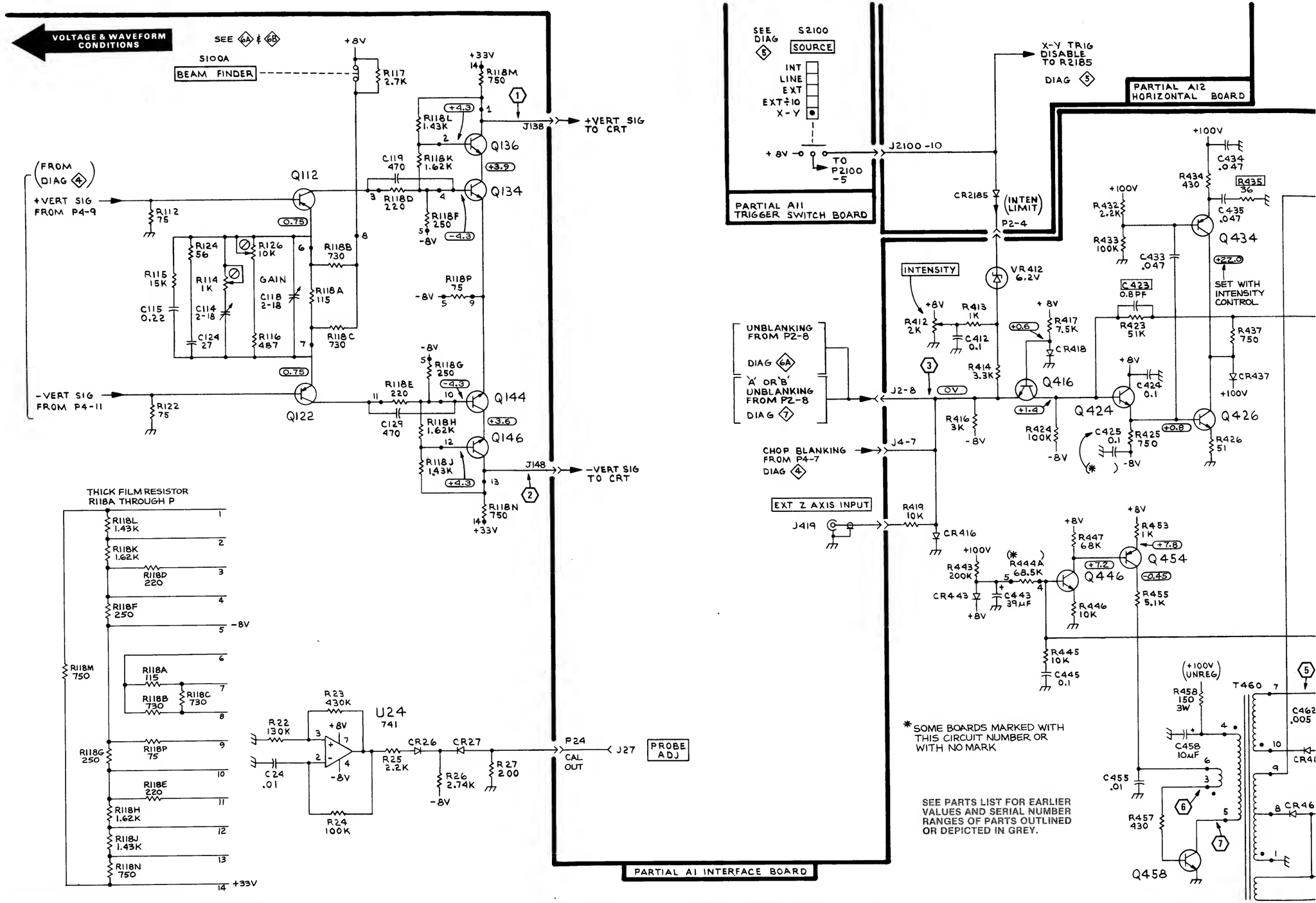
VOLTAGE & WAVEFORM CONDITIONS
SEE 6A & 6B
S100A
BEAM FINDER
+8V
R117 2.7K
+33V
R118M 750
R118L 1.43K
R118K 1.62K
Q136
Q134
Q112
C119 470
R118D 220
R118F 250
-8V
J138
+VERT SIG TO CRT
(FROM DIAG 4)
+VERT SIG FROM P4-9
R112 75
R124 56
R126 10K
R118B 730
R115 15K
R114 1K
GAIN
C118 2-18
R118A 115
C115 0.22
C114 2-18
C124 27
R116 487
R118C 730
R118P 75
-VERT SIG FROM P4-11
R122 75
Q122
R118G 250
R118E 220
C129 470
R118H 1.62K
Q144
Q146
R118J 1.43K
R118N 750
J148
-VERT SIG TO CRT
THICK FILM RESISTOR R118A THROUGH P
R23 430K
U24 741
R22 130K
C24 .01
R24 100K
CR26
CR27
R25 2.2K
R26 2.74K
R27 200
P24 CAL OUT
J27
PROBE ADJ
PARTIAL A1 INTERFACE BOARD
SEE DIAG 5
S2100
SOURCE
INT
LINE
EXT
EXT÷10
X-Y
+8V
TO P2100 -5
J2100-10
X-Y TRIG DISABLE TO R2185
DIAG 5
PARTIAL A12 HORIZONTAL BOARD
PARTIAL A11 TRIGGER SWITCH BOARD
CR2185
(INTEN LIMIT)
P2-4
INTENSITY
VR412 6.2V
R412 2K
R413 1K
C412 0.1
R414 3.3K
R417 7.5K
CR418
Q416
UNBLANKING FROM P2-8
DIAG 6A
'A' OR 'B' UNBLANKING FROM P2-8
DIAG 7
J2-8
CHOP BLANKING FROM P4-7
DIAG 4
J4-7
R416 3K
R424 100K
EXT Z AXIS INPUT
J419
R419 10K
CR416
R443 200K
CR443
R444A 68.5K
C443 39µF
R447 68K
Q446
R446 10K
R445 10K
C445 0.1
R453 1K
Q454
R455 5.1K
+100V
C434 .047
R434 430
R435 36
C435 .047
R432 2.2K
R433 100K
C433 .047
Q434
SET WITH INTENSITY CONTROL
C423 0.8PF
R423 51K
C424 0.1
Q424
C425 0.1
R425 750
Q426
R426 51
R437 750
CR437
(+100V UNREG)
R458 150 3W
C458 10µF
T460
C462 .005
CR46
C455 .01
R457 430
Q458
*SOME BOARDS MARKED WITH THIS CIRCUIT NUMBER OR WITH NO MARK
SEE PARTS LIST FOR EARLIER VALUES AND SERIAL NUMBER RANGES OF PARTS OUTLINED OR DEPICTED IN GREY.

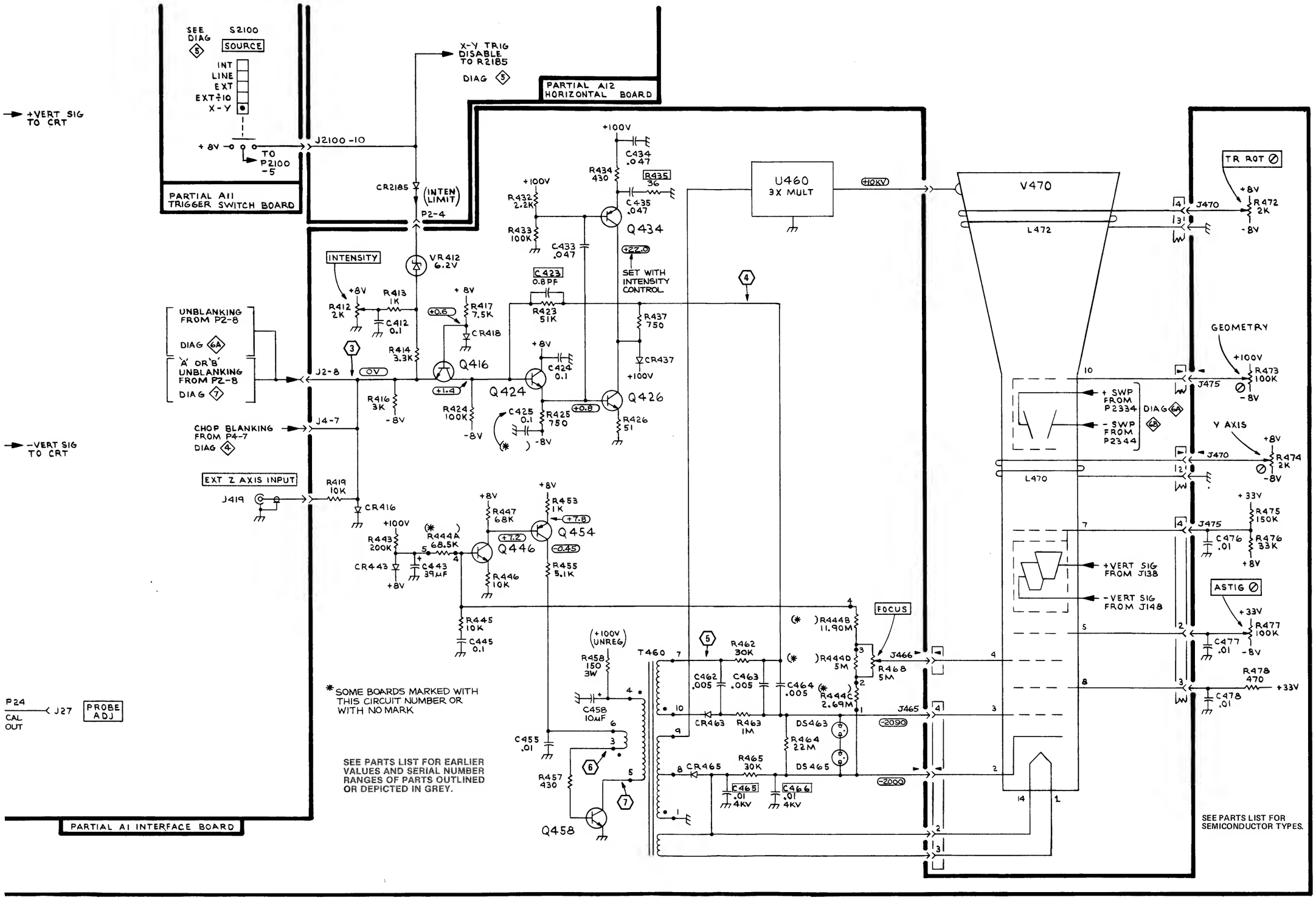

1983-44
REV. A, JULY 1977

CRT & VERTICAL AMPLIFIER 1

CRT & VERT AMPL

1

III.1

POWER SUPPLY CIRCUIT DESCRIPTION

POWER INPUT

AC power is applied to the primary of T700 though line fuse F700, POWER switch S700, Line Selector switch S701, and Range Selector switch S705.

The Line Selection switch, S701, connects the split primary windings of T700 in parallel for 120 V operation or in series for 240 V. When changing the nominal line voltage, also change the line fuse. See parts list for correct fuse values.

The Range Selector switch, S705, selects either LO (100 or 220 V) or HI (120 or 240 V) nominal line-voltage range.

SECONDARY CIRCUITS

The secondary circuit supplies four regulated voltages: −8 V, +8 V, +33 V, and +100 V.

Operational amplifiers U742A (+8 V supply) and U742B (−8 V supply) have differential inputs that monitor output voltage variations and provide correction signals to the series-regulating transistors. For example, suppose the +8 volt supply drops. This negative change is coupled to the inverting input of U742A through sense resistor R756, causing pin 7 to go positive. Since the voltage across VR746 remains essentially constant, Q754 and Q756 follow this change and raise the output voltage back to +8 volts. In the +100 volt supply, Q726 acts as the feedback amplifier with its base being the inverting input. The regulating action is the same as in the +8 and −8 volt supplies. Zener diode, VR762, provides a 5 volt reference for the −8 V supply, which in turn provides the reference for the +8 and +100 volt supplies. The series regulating elements in the +100 V and +8 V supplies are transistors Q734-Q736 and Q754-Q756. The series regulating element in the −8 V supply is a modified Darlington configuration consisting of Q774 and Q776. Current limiting circuits provide short-circuit protection for each regulated supply. The following describes the +8 V current-limiting circuit. The other current-limiting circuits operate similarly.

In the +8 V supply, Q752 is normally biased off. Under normal conditions, the base of Q752 is set at about +8 V. As the supply current increases, the voltage drop across R754 increases. Since the Q756 emitter-base diode voltage difference remains constant, the increasing voltage on Q756 emitter due to the R754 voltage drop causes a corresponding increase at the base of Q756. This voltage is applied to voltage divider R752 and R753, causing the base of Q752 to go more positive. When the supply current increases sufficiently beyond the normal operating current, Q752 turns on. The collector of Q752 moves in the negative direction, which begins turning off Q754-Q756 and creates a foldback condition, (see Fig. 7-3). Transistor, Q756, continues to conduct some current when the supply is limited, dropping enough voltage across R754 to keep Q752 biased on.

Regulated +33 V is provided by Zener diode VR784 from the +100 V supply. Current divider, R741, R742, R2102 (see diagram 5) provides a sample of the line voltage for line triggering.

POWER-ON LAMP CIRCUIT

The POWER (ON) lamp, DS796, remains on as long as the line voltage does not vary more than approximately 10% from the nominal selected line voltage (100, 120, 220, or 240 V). When the line voltage is not within the 10% limit, the ON lamp blinks.

As long as Q796 is conducting, DS796 remains on. If Q796 is biased off, DS796 goes out, allowing C796 to charge through R796 and R797. When C796 reaches about 80 V, it discharges through DS796 causing it to turn on momentarily. Capacitor, C796, again is charged through R796-R797 and discharged through DS796. This cycle repeats, causing the ON lamp to blink until the line voltage is within the 10% limit and Q796 conducts.

When the 100 V unregulated supply at voltage divider R791-R792 and R793 increases to more than about 10% above the nominal value, Q792 turns on and Q796 turns off, causing DS796 to blink. When the 100 V unregulated supply at voltage divider R794-R799 and R795 decreases to less than about 10% below the nominal value, Q796 turns off, causing DS796 to blink.

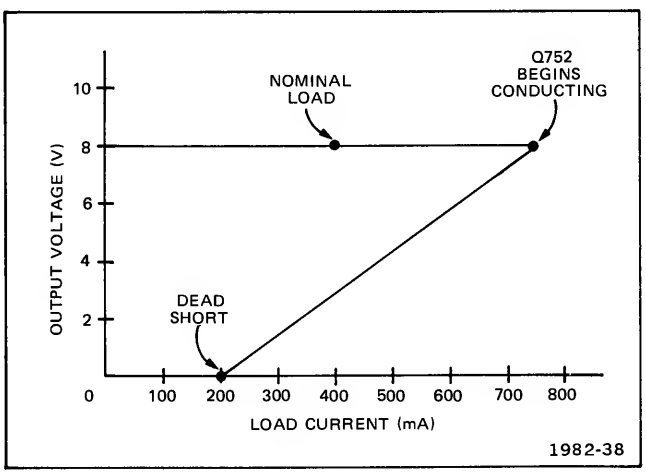

Fig. 7-3. Foldback circuit action.

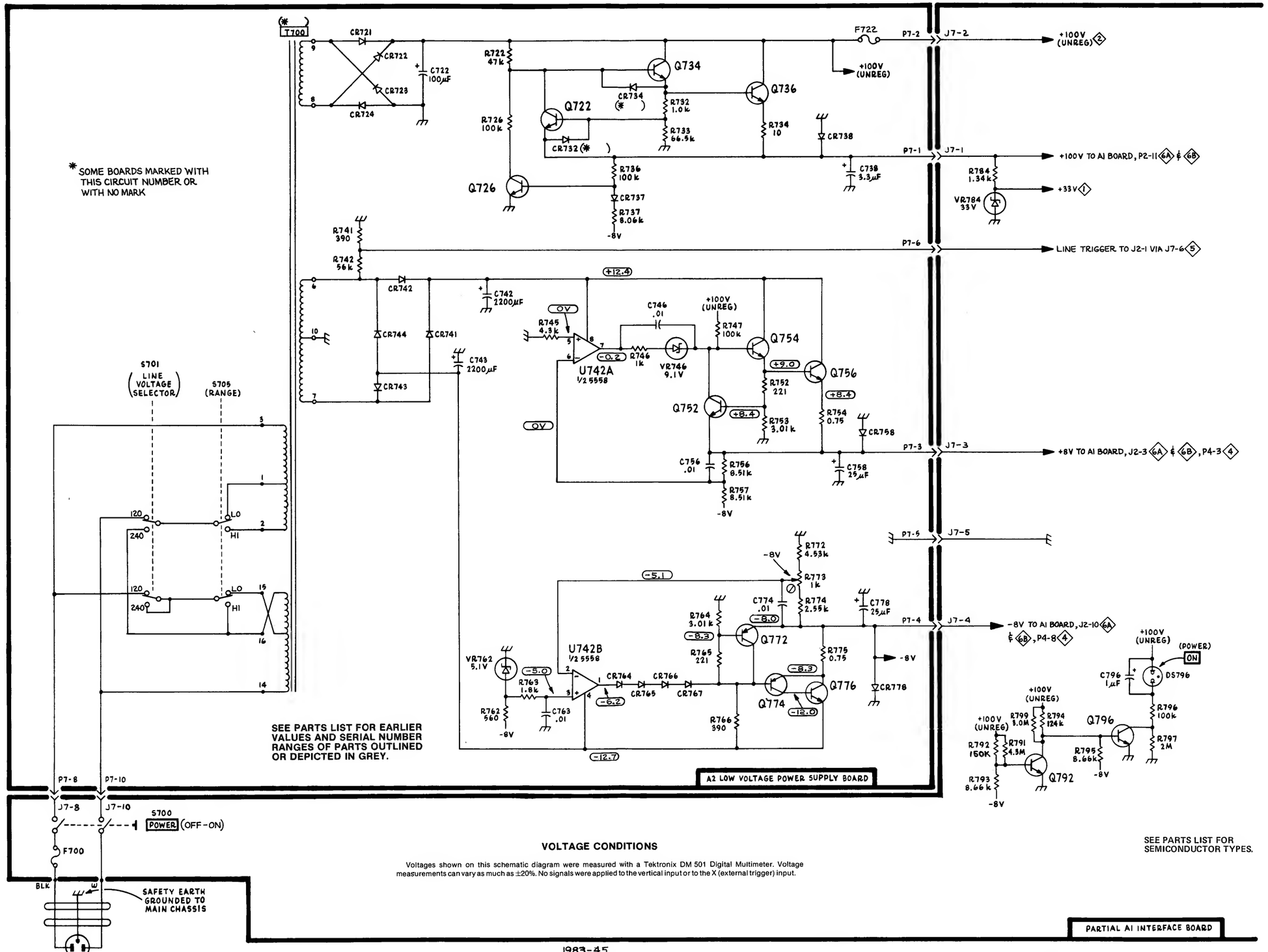

VOLTAGE CONDITIONS

Voltages shown on this schematic diagram were measured with a Tektronix DM 501 Digital Multimeter. Voltage measurements can vary as much as ±20%. No signals were applied to the vertical input or to the X (external trigger) input.

IV.1

VERT INPUT CIRCUIT DESCRIPTION

Since Channel 1 and Channel 2 vertical input circuits are identical, only Channel 1 is discussed in detail. The 4100 series circuit numbers identify the Channel 1 components and 4200 series numbers identify the Channel 2 components.

INPUT COUPLING SWITCH

Vertical input signal is ac-coupled, dc-coupled, or grounded by S4100. In the DC position, the input signal is coupled directly to the VOLTS/DIV switch attenuator. In the AC position, the input signal passes through C4102 to the attenuator. In the GND position, the signal path from the input connector to the attenuator is grounded though C4102-R4102. This provides a ground reference without disconnecting the signal from the input connector. In the GND position, C4102 is charged to the average signal level through R4102 so that the trace remains on screen when S4100 is changed to the AC position.

VOLTS/DIV SWITCH

The VOLTS/DIV switch selects attenuator ratio and preamplifier gain to determine the deflection factor. The basic 1X deflection factor of the vertical deflection system is 2 mV/division. At this setting, no attenuators are switched in and the gain switching circuit sets the preamplifier gain to maximum. To provide the complete range of deflection factors indicated on the front panel, precision attenuators are switched in and out of the attenuator and gain switching circuit.

The attenuators are frequency compensated voltage dividers that provide constant attenuation at all frequencies within the bandwidth of the instrument. The input RC characteristics (approximately 1 MΩ times approximately 30 pF) are maintained for each setting of the VOLTS/DIV switch. The attenuator circuit consists of a 10X and a 100X attenuator. 1000X is obtained when the 10X and 100X attenuators are cascaded.

The gain switching circuit consists of R4143 through R4147 and three VOLTS/DIV switch contacts. Three preamplifier gains are selected: 1X (maximum), 2.5X reduction, and 5X reduction. Refer to Table 7-1 for the attenuator and gain switching sequence.

PREAMPLIFIER

The signal from the input attenuator is connected to source follower Q4122A via C4122 and R4122. Resistor R4121 determines the 1 MΩ input resistance, and R4122 limits current drive to the gate of Q4122A. Diode CR4122 protects the circuit from high negative-going input signals by limiting the voltage at the gate of Q4122A to about −8 volts. The Q4122A gate-drain junction provides protection from high positive-going signals by limiting the gate voltage to about +8 volts. FET Q4122B provides a constant-current source for Q4122A. For some serial numbers, Q4122 substrate (pin 8) is provided with a bias to compensate for possible substrate leakage. This bias is derived by the voltage divider action of R4128 and R4129 between +8 volts and ground.

Integrated circuits U4134B and U4134C are emitter followers. The signal at the emitter of U4134B follows the signal at the gate of Q4122A. Divider network R4143 through R4147 attenuates the signal from U4134B which drives the base of U4134D. DC BAL, R4130 adjusts for minimum trace shift when switching between adjacent positions of the VOLTS/DIV switch.

First Cascode Amplifier

Paraphase amplifier stage, U4134A, U4134D, and associated circuitry, converts the single-ended signal at the base of U4134D to a push-pull current signal. Capacitors C4158 and C4168 minimize the Miller effect through U4134D and U4134A. Components C4154, C4156, R4156, R4166 and C4166, connected between U4134A and U4134D emitters, compensate for high-frequency losses in the preamplifier. Gain adjustment R4151 determines the gain of the preamplifier. The VAR control, R4152, provides uncalibrated deflection factors between VOLTS/DIV switch settings by attenuating the signal to the base of U4134D. When R4152 is rotated clockwise, its full resistance is in series with R4162, and the deflection factors are calibrated.

Transistors Q4174 and Q4184 and associated circuitry make up a common base amplifier stage.

TABLE 7-1

Attenuator and Gain Switching Sequence

VOLTS/DIV Setting	Attenuator (signal attenuation)	Gain Switch (preamp gain reduction)
2 mV	1X	1X
5 mV	1X	2.5X
10 mV	1X	5X
20 mV	10X	1X
50 mV	10X	2.5X
.1 V	10X	5X
.2 V	100X	1X
.5 V	100X	2.5X
1 V	100X	5X
2 V	1000X	1X
5 V	1000X	2.5X
10 V	1000X	5X

Second Cascode Amplifier

Transistors Q4176-Q4186 and Q4344-Q4346 (on diagram 4) comprise the second cascode amplifier. Capacitors C4177 and C4187 minimize the Miller effect through Q4176 and Q4186. The value of thermal resistor RT4175 (connected between emitters of Q4176 and Q4186) changes with temperature to counteract any gain change in the amplifier due to thermal variations. This holds the gain of the entire vertical amplifier constant over the operating temperature range of the instrument.

A sample of the vertical voltage signal from the emitters of Q4176 and Q4186 is applied to Q4194 and Q4196 where it is converted to a current signal. This current signal is applied to the trigger input amplifier (see diagram 5) via diode switching circuitry (see diagram 4). See circuit descriptions for diagrams 4 and 5 for further details.

IV.3

VOLTAGE AND WAVEFORM CONDITIONS

VOLTAGE CONDITIONS

Voltages shown on this diagram were measured with a Tektronix DM 501 Digital Multimeter. Voltage measurements can vary as much as ±20%. No signals were applied to the vertical inputs or to the X (external trigger) input. Refer to Waveform Conditions for T932 or T935 control settings.

WAVEFORM CONDITIONS

Waveforms below were monitored with a Tektronix 7704A Oscilloscope, 7B71 Time Base, 7A15A Amplifier, and 10X probe (unless otherwise stated). The oscilloscope input coupling was set to ac. Waveforms vary as much as ±20%.

A 50 kHz, 100 mV sine wave was applied to the CH 1 input and a 50 kHz, 2 V square wave was applied to the CH 2 input. A Tektronix FG 501 Function Generator provides either of the input waveforms.

The T932 or T935 controls were set as follows:

SOURCE	INT
MODE	AUTO
Vertical Mode	CH 1
CH 1 VOLTS/DIV	50 mV
CH 2 VOLTS/DIV	1 V
VAR (both)	Detent
AC-GND-DC (both)	DC
DISPLAY MODE	A
A & B SEC/DIV	10 μs
1X-10X	1X
HOLD-OFF	Fully ccw
LEVEL	For triggered display

The other controls were set as necessary to obtain the desired display.

1

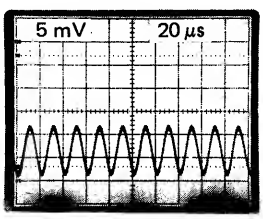

USE 1X PROBE

2

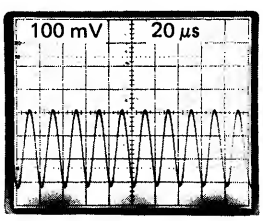

3

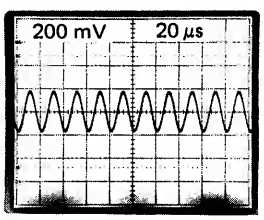

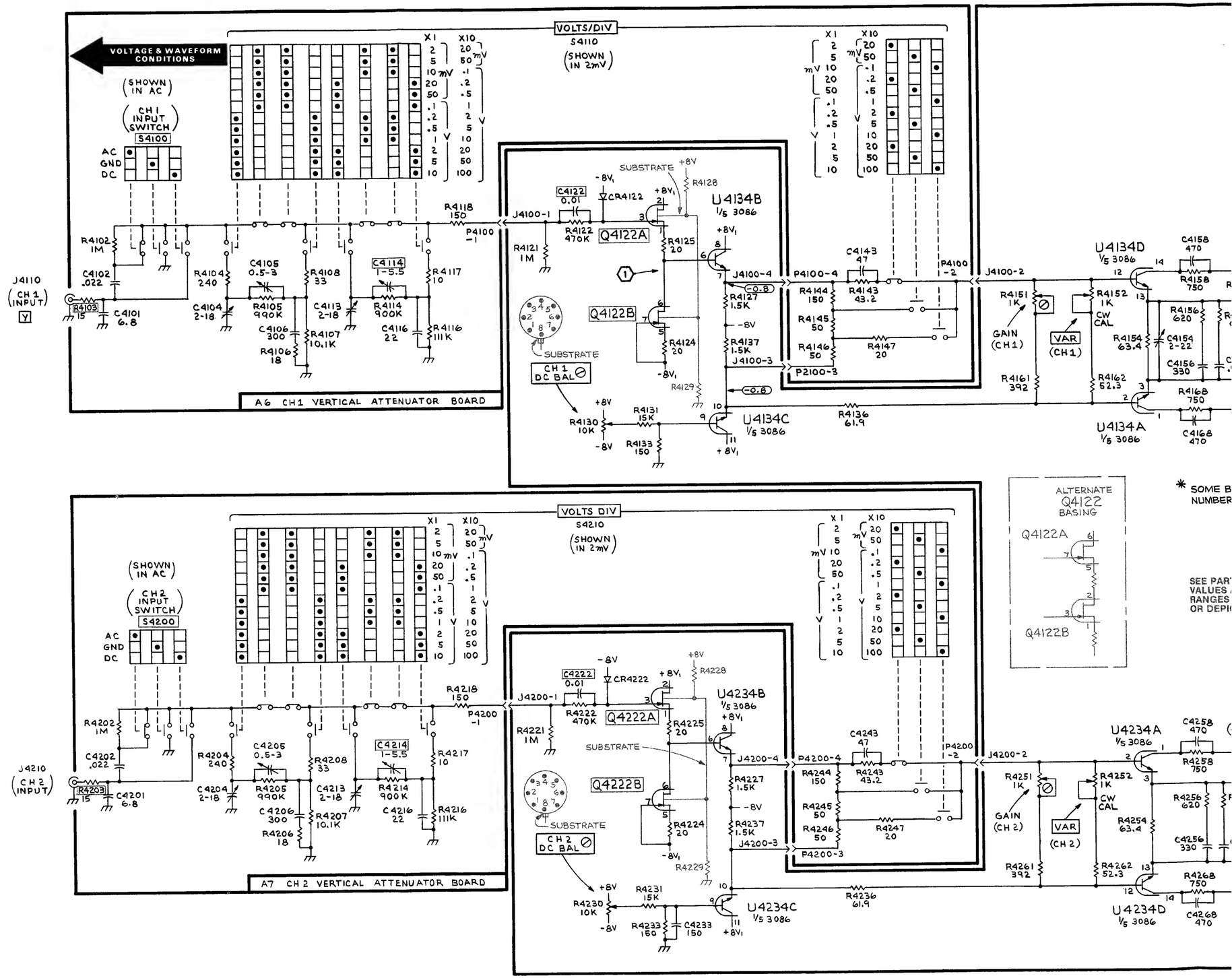

T932/T935

1983-46
REV. A, JULY 1977

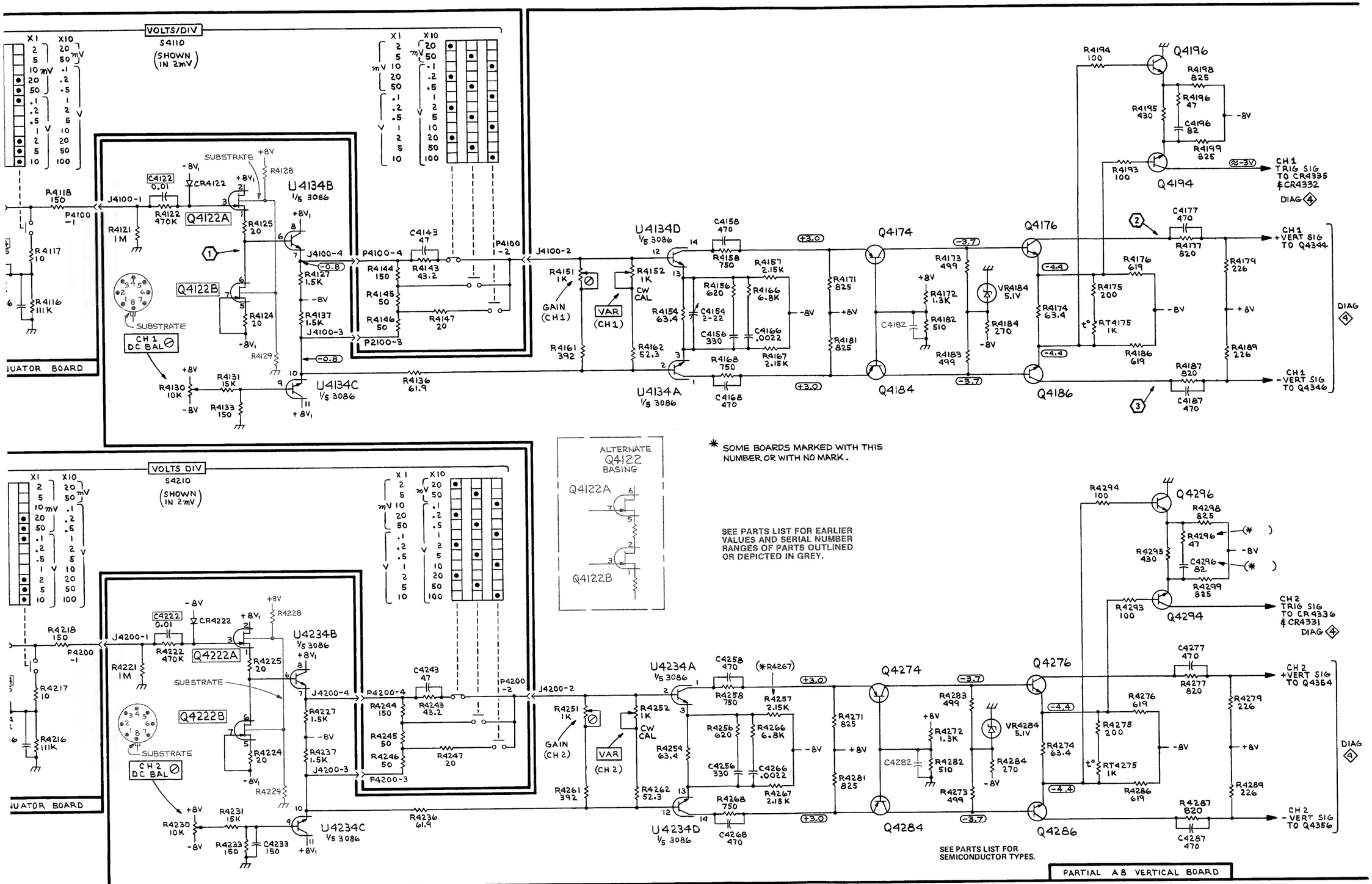

1983-46
REV. A, JULY 1977

VERTICAL INPUT 3

VERT SWITCHING CIRCUIT DESCRIPTION

Since Channel 1 and Channel 2 vertical circuits are identical, only Channel 1 is discussed in detail.

Digital logic devices are used to perform some of the functions in this instrument. LO and HI designations are used in this circuit description to indicate the state of the digital circuit. HI indicates the more positive of the two levels. The specific voltages that constitute a LO and HI logic state, may vary between individual devices.

POSITION CONTROL

POSITION control R4346 varies the dc voltage at the bases of Q4386 and Q4376 to vertically position the trace on the crt.

DELAY LINE DRIVER

The delay line driver is a push-pull feedback amplifier stage composed of Q4386, Q4376, and associated circuitry. A sample of the output of Q4386 and Q4376 is fed back through R4383 and R4373 to the bases of Q4386 and Q4376. Due to this feedback, this stage forms an inverting operational amplifier with a virtual ground at the bases of Q4386 and Q4376. Any current into these virtual ground null points causes an output voltage that is proportional to the feedback resistance.

Components C4396, R4396, C4397, C4395, R4397, C4398, R4398 provide compensation (peaking) to correct for delay line losses.

DELAY LINE

The delay line, DL4380 provides approximately 120 ns delay in the vertical signal. This allows the sweep generator circuit time to initiate a sweep before the vertical signal reaches the crt vertical deflection plates.

VERTICAL SWITCHING

The vertical switching circuit determines whether CH 1 or CH 2 is connected to the vertical output amplifier in the DUAL TRACE alternate or chopped modes. Both channels are alternately displayed on a time shared basis.

The diode gates, consisting of four diodes each, act as switches that allow either of the vertical preamplifier signals to be coupled to the delay line driver. Diodes CR4346, CR4347, CR4348, and CR4349 control the CH 1 output; CR4356, CR4357, CR4358, and CR4359 control the CH 2 output. These diodes are controlled by flip-flop U4324A, which in turn is controlled by Vertical Mode switch, S4320.

When the Vertical Mode switch is in the CH 1 position, pin 4 of U4324A is held LO, causing pin 5 to go HI. A HI at pin 5 (a voltage higher than at the bases of Q4386 and Q4376) reverse biases CR4347 and CR4348 and forward biases CR4346 and CR4349. This allows the CH 1 signal to pass to the delay line driver. When pin 5 is HI, pin 6 is LO, causing the cathodes of CR4357 and CR4358 to be connected to a voltage much lower than on the bases of Q4386 and Q4376. Diodes CR4357 and CR4358 are now forward biased and diodes CR4356 and CR4359 are reverse biased, preventing the CH 2 signal from passing to the delay line driver.

In the CH 2 mode, the above conditions are reversed. Diodes CR4357 and CR4358 are reverse biased, passing the CH 2 signal and blocking the CH 1 signal.

In the DUAL TRACE Vertical Mode, CH 1 and CH 2 are alternately connected to the delay line driver. There are two dual trace modes: chopped and alternate. These modes are determined by the SEC/DIV switch setting. Chopped mode is obtained for sweep speeds of 1 ms and slower; alternate is obtained for sweep speeds of 0.5 ms and faster.

In the chopped mode pin 2 of U4306A is ungrounded, allowing the multivibrator, U4306A and U4306D, to free run at about 250 kHz. The output at pin 8 of U4306C serves as a clock pulse for U4324A, which in turn switches the diode gates at the 250 kHz rate. The clock pulse is also fed to U4324B, which provides an output pulse to the Z Axis amplifier to blank out the transition between CH 1 and CH 2 traces. If pin 13 of U4324B goes LO, the output pin 9 is set LO, causing pin 6 of U4306B to go HI. This causes pin 13 of U4324A to go HI after being delayed by C4315 charging through R4315.

The clock pulse applied to pin 11 of U4324B causes pin 9 to go HI, which in turn, after passing through the inverter and after some delay, sets pin 13 LO again. This causes pin 9 to go LO again. The positive-going voltage pulse (whose width is determined by R4315 and C4315) is converted to current by R4318 and sent to the Z Axis Amplifier to blank switching transients.

In the alternate mode, pin 2 of U4306A is grounded (via SEC/DIV), preventing multivibrator operation, thus keeping pin 10 of U4306C HI. At the end of each sweep, the base of Q4302 receives a current pulse driving it into saturation. The resulting negative-going pulse at the collector is fed through C4302 to pin 9 of U4306C causing pin 8 to go HI. This in turn, switches U4324A to pass either CH 1 or CH 2 to the delay line driver at the end of each sweep. Pin 12 of U4324B is grounded through the SEC/DIV switch and prevents an output at pin 9.

The Vertical Mode switch also selects the appropriate internal triggering source for CH 1 and CH 2. With the Vertical Mode switch set to CH 1 and DUAL TRACE, CR4335 is forward biased and the signal from the CH 1 trigger pickoff goes to the sweep circuit. In these modes, CR4331 is connected to the +8 volts, thus reverse biasing CR4336, preventing the CH 2 trigger signal from entering the trigger input amplifier. With the Vertical Mode switch set to CH 2, CR4336 becomes forward biased while CR4335 is reverse biased because CR4332 is now connected to +8 volts.

TRIGGER PICKOFF

Transistors Q4196 and Q4194 (diagram 3) convert a sample of the vertical signal to a single-ended current signal to drive the trigger input amplifier. When the TRIGGERING SOURCE switch is set to INT, approximately −4 volts from the trigger input amplifier is applied to the collector of Q4336, reverse biasing CR4338 (diagram 4), and allowing the internal trigger signal (selected by diode switching circuit) to be applied to the trigger input amplifier. When the SOURCE switch is set to LINE, EXT, EXT÷10, or X-Y, the internal trigger signal is disconnected from the trigger input amplifier, forward biasing CR4338, and setting the collector of Q4336 at about −3 volts. The resultant Q4336 load maintains conduction of Q4196 and Q4194, thus presenting a constant load for Q4176 and Q4186 (see diagram 3) to prevent distortion of the main vertical signal.

V.3
VOLTAGE AND WAVEFORM CONDITIONS

VOLTAGE CONDITIONS

Voltages shown on this diagram were measured with a Tektronix DM 501 Digital Multimeter. Voltage measurements can vary as much as ±20%. No signals were applied to the vertical inputs or to the X (external trigger) input. Refer to Waveform Conditions for T932 or T935 control settings.

WAVEFORM CONDITIONS

Waveforms below were monitored with a Tektronix 7704A Oscilloscope, 7B71 Time Base, 7A15A Amplifier, and 10X probe. The oscilloscope input coupling was set to ac. Waveforms vary as much as ±20%.

A 50 kHz, 100 mV sine wave was applied to the CH 1 input and a 50 kHz, 2 V square wave was applied to the CH 2 input. A Tektronix FG 501 Function Generator provides either of the input waveforms.

The T932 or T935 controls were set as follows:

SOURCE	INT
MODE	AUTO
Vertical Mode	DUAL TRACE
CH 1 VOLTS/DIV	50 mV
CH 2 VOLTS/DIV	1 V
VAR (both)	Detent
AC-GND-DC (both)	DC
DISPLAY MODE	A
A & B SEC/DIV	10 μs*
1X-10X	1X
HOLD-OFF	Fully ccw
LEVEL	For triggered display

The other controls were set as necessary to obtain the desired display. For waveforms 1, 2, 5, and 6, adjust CH 1 and CH 2 POSITION controls as necessary for the desired display.

1

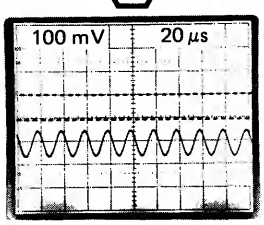

2

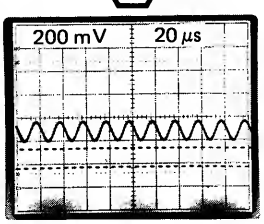

3

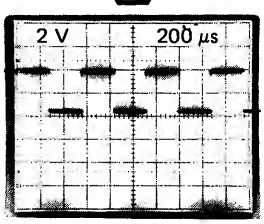

4

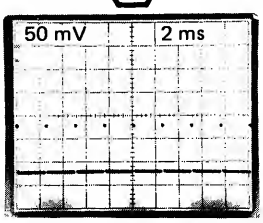

*SET T932 OR T935 SEC/DIV TO 0.2 mS

5

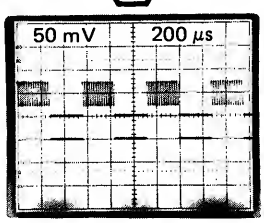

6

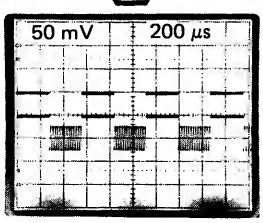

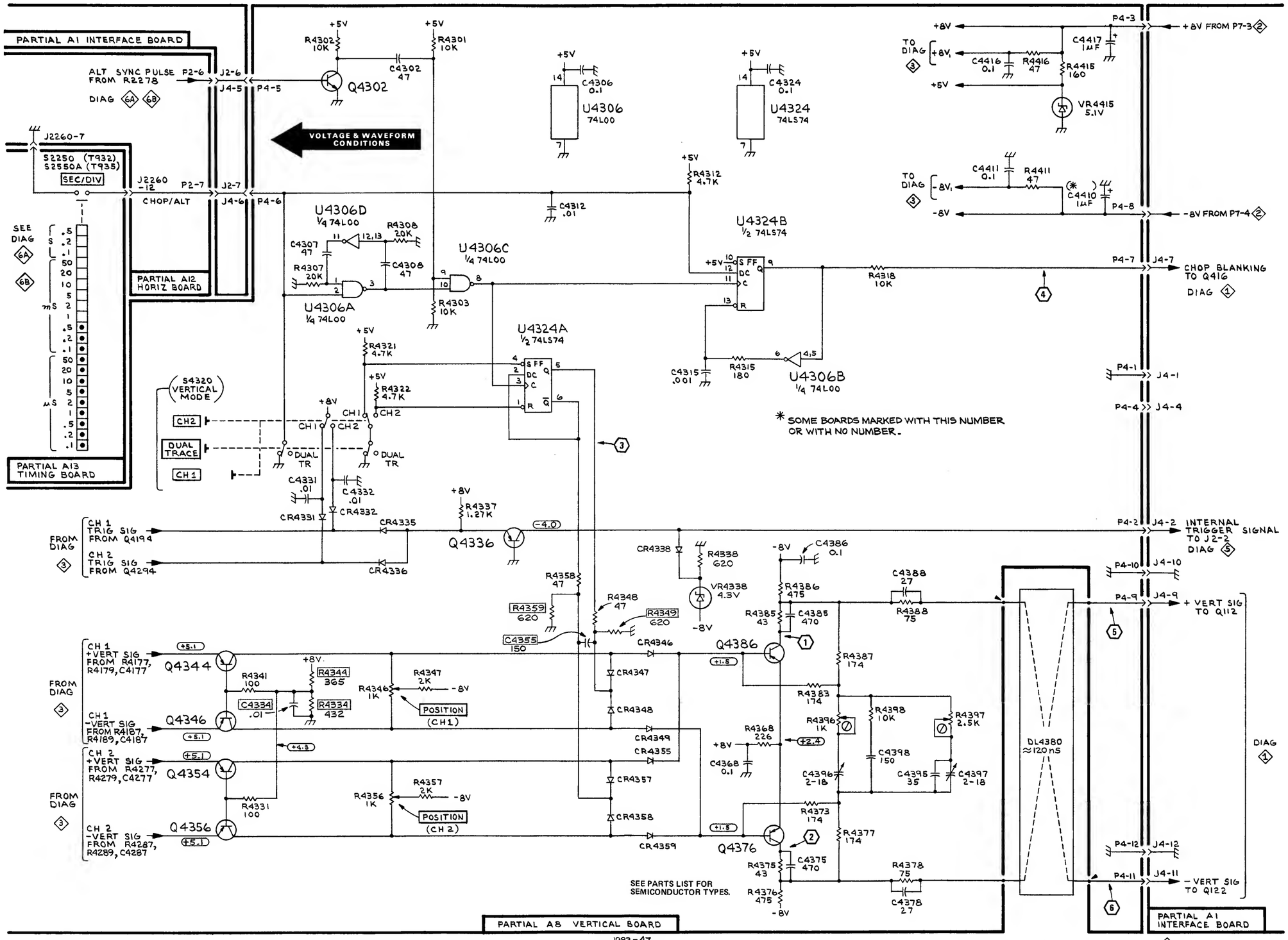
PARTIAL A1 INTERFACE BOARD
ALT SYNC PULSE FROM R2278
DIAG 6A 6B
J2260-7
S2250 (T932)
S2550A (T935)
SEC/DIV
J2260-12
CHOP/ALT
PARTIAL A12 HORIZ BOARD
SEE DIAG 6A 6B
PARTIAL A13 TIMING BOARD
VOLTAGE & WAVEFORM CONDITIONS
Q4302
U4306
74L00
U4324
74LS74
U4306D
1/4 74L00
U4306A
1/4 74L00
U4306C
1/4 74L00
U4324B
1/2 74LS74
U4324A
1/2 74LS74
U4306B
1/4 74L00
S4320 VERTICAL MODE
CH2
DUAL TRACE
CH1
DUAL TR
FROM DIAG 3
CH 1 TRIG SIG FROM Q4194
CH 2 TRIG SIG FROM Q4294
Q4336
CH 1 +VERT SIG FROM R4177, R4179, C4177
CH 1 -VERT SIG FROM R4187, R4189, C4187
CH 2 +VERT SIG FROM R4277, R4279, C4277
CH 2 -VERT SIG FROM R4287, R4289, C4287
Q4344
Q4346
Q4354
Q4356
POSITION (CH1)
POSITION (CH2)
Q4386
Q4376
DL4380 ≈120nS
+8V FROM P7-3
-8V FROM P7-4
TO DIAG 3
CHOP BLANKING TO Q416 DIAG 1
INTERNAL TRIGGER SIGNAL TO J2-2 DIAG 5
+ VERT SIG TO Q112
- VERT SIG TO Q122
DIAG 1
* SOME BOARDS MARKED WITH THIS NUMBER OR WITH NO NUMBER.
SEE PARTS LIST FOR SEMICONDUCTOR TYPES.
PARTIAL A8 VERTICAL BOARD
PARTIAL A1 INTERFACE BOARD

VI.1

TRIGGER CIRCUIT DESCRIPTION

Digital logic devices are used to perform some of the functions in this instrument. LO and HI designations are used in this circuit decription to indicate the state of the digital circuit. HI indicates the more positive of the two levels. The specific voltages that constitute a LO and HI logic state may vary between individual devices.

INPUT AND SWITCHING

SOURCE Switch

The SOURCE switch, S2100, selects trigger signals from INT, LINE, EXT, EXT ÷ 10, and X-Y sources.

INT. Signal from the trigger pickoff circuit in the vertical amplifier is connected to the trigger input amplifier Q2122. (See diagrams 3 and 4.)

LINE. A sample of the line voltage, obtained from the power transformer, is connected to the trigger input amplifier Q2122.

EXT. Externally applied signals pass through buffer amplifier Q2104-Q2106. FET Q2104 is a source follower and Q2106 is a current source. Transistor Q2108 and R2107 convert the voltage signal at the buffer output to a current for application to the trigger input amplifier. When EXT is selected, the collector of Q2108 is connected to the trigger input amplifier (Q2122) by SOURCE switch S2100.

EXT
10. The output of buffer amplifier Q2104-Q2106 is connected to R2111. Resistor R2111 converts the buffer output voltage to a current which is connected to the trigger input amplifier via S2100.

X-Y. Signals from the X (EXT) input are routed to the horizontal amplifier via CR2183. The SOURCE switch connects +8 volts to R2182, forward biasing CR2183 and providing current to the horizontal amplifier to center the crt display. Further, +8 volts is applied to CR2182 and R2185 to electrically place the sweep in the NORM mode and to disable the trigger circuit.

MODE Switch

The MODE switch (S2150) selects three triggering modes: AUTO, NORM, and TV.

AUTO. Allows the sweep to free run in the absence of a triggering signal. See sweep circuit description for details.

NORM. Connects +8 volts to R2223 in the sweep generator circuit. Allows the sweep to run only when a suitable triggering signal is present.

TV. The trigger signal is applied to the TV sync separator circuit (Q2164, Q2174, Q2176) and the normal trigger generator circuit is disabled. In this mode, the SLOPE switch is used to supply the sync separator with a signal of the proper polarity. For SEC/DIV settings of .1 ms/div or slower, the sweep is triggered by vertical sync pulses which occur at a field rate. For SEC/DIV settings of 50 μs and faster, the sweep is triggered by the TV horizontal line signals.

TRIGGER INPUT AMPLIFIER

The trigger input amplifier consists of Q2122, Q2124, Q2128, and associated circuitry. Resistors R2127 and R2128 set the amplifier input at −4 volts. The inverting configuration and feedback from the emitter of Q2128 form an inverting operational amplifier with a null point at the base of Q2122. Any current into the null point produces a voltage at the output proportional to the feedback resistor R2116. Diode CR2124 prevents the emitter of Q2128 from going below ground and reversing the voltage across C2132.

TRIGGER LEVEL COMPARATOR

Differential amplifier Q2134-Q2136 functions as a comparator. The LEVEL control R2138 selects the point on the waveform that starts a sweep. Capacitor C2132 ac couples the trigger signal to the comparator. As the trigger signal at the base of Q2134 passes through the same voltage level as the base of Q2136 (set by LEVEL control), the signal at the emitter of Q2152 passes through the threshold (about 1 volt) of Schmitt trigger U2156A-U2156B producing a logic trigger signal. The trigger signals at the collectors of Q2134 and Q2136 are of opposite polarity. This allows the SLOPE switch S2140 to invert the signals applied to the TV trigger input amplifier Q2164 and the normal trigger input amplifier Q2142, Q2144, and Q2152. When the SLOPE switch is in the +OUT position, the output at the collector of Q2142 is in phase with the trigger source signal. Transistors Q2142, Q2144 and Q2152 convert the current signal from the collectors of Q2134 or Q2136 to a voltage signal for triggering the Schmitt trigger.

TV TRIGGER CIRCUIT

Active devices Q2164, Q2174, Q2176, U2156B, C, D, and associated circuitry comprise the TV trigger circuit. When the MODE switch is in TV, R2186 is disconnected from +8 volts which allows trigger signals from the collectors of Q2134 and Q2136 to pass through the TV trigger circuit. (In AUTO and NORM, the +8 volts applied to R2186 biases Q2164 to saturation.)

Transistor Q2164 is a high gain feedback amplifier. To achieve stable triggering on TV signals, the LEVEL control must be set at a point that will allow the sync pulses to appear within the dynamic range of the amplifier.

The sync separator circuit consists of Q2174 and associated circuitry. It processes sync-positive pulses when the SLOPE switch is in the +OUT position and sync-negative pulses in the −IN position. Transistor Q2174 produces large positive-going pulses from negative-going sync signals at the collector of Q2164.

In the TV field mode (SEC/DIV switch set for .1 ms or slower), Q2176 is saturated (since base is grounded), and the integrator (composed of C2174, C2176, R2174, and R2176) is switched into the circuit (effectively connected to +8 volts through saturated Q2176). The integrator filters out the horizontal sync pulses, leaving only the integrated vertical sync pulses, which trigger the TV Schmitt trigger U2156B and U2156C.

In the TV line mode (SEC/DIV switch set for 50 μs or faster), Q2176 is turned off (base open), disconnecting C2174 and C2176 from +8 volts. Capacitors C2174 and C2176 no longer integrate the pulses, thus allowing both the horizontal and vertical sync pulses to pass through to the TV Schmitt trigger.

SCHMITT TRIGGERS

The Schmitt trigger for the NORM and AUTO triggering modes consists of U2156A, U2156B, and associated circuitry. Hysteresis of this trigger circuit is determined by R2152, R2153, and R2151.

The Schmitt trigger for the TV triggering mode is U2156B, U2156C, U2156D, and associated circuitry. Resistors R2154 and R2178 determine the sensitivity.

When the MODE switch S2150 is in AUTO or NORM, +8 volts is applied to R2156 which causes pin 1 of U2156A to go HI enabling Schmitt trigger U2156A-U2156B. At the same time, pins 12 and 13 of U2156D are also HI disabling Schmitt trigger U2156C-U2156B. A trigger signal from Q2152 triggers Schmitt trigger U2156A-U2156B to produce a logic trigger signal at pin 6 of U2156B.

When the MODE switch S2150 is in TV, +8 volts is removed from R2156 and pin 1 of U2156A is LO, disabling Schmitt trigger U2156A-U2156B. Pins 12 and 13 of U2156D are LO, enabling Schmitt trigger U2156B-U2156C. The trigger signal from the TV sync separator triggers Schmitt trigger U2156B-U2156C to produce a logic trigger signal at pin 6 of U2156B.

VI.3

VOLTAGE AND WAVEFORM CONDITIONS

VOLTAGE CONDITIONS

Voltages shown on this diagram were measured with a Tektronix DM 501 Digital Multimeter. Voltage measurements can vary as much as ±20%. No signals were applied to the vertical inputs or to the X (external trigger) input. Refer to Waveform Conditions for T932 or T935 control settings.

WAVEFORM CONDITIONS

Waveforms below were monitored with a Tektronix 7704A Oscilloscope, 7B71 Time Base, 7A15A Amplifier, and 10X probe. The oscilloscope input coupling was set to ac. Waveforms vary as much as ±20%.

A 50 kHz, 100 mV sine wave was applied to the CH 1 input and a 50 kHz, 2 V square wave was applied to the CH 2 input. A Tektronix FG 501 Function Generator provides either of the input waveforms.

The T932 or T935 controls were set as follows:

SOURCE	INT
MODE	AUTO*
Vertical Mode	CH 1
CH 1 VOLTS/DIV	50 mV
CH 2 VOLTS/DIV	1 V
VAR (both)	Detent
AC-GND-DC (both)	DC
DISPLAY MODE	A
A & B SEC/DIV	10 μs
1X-10X	1X
HOLD-OFF	Fully ccw
LEVEL	For triggered display

The other controls were set as necessary to obtain the desired display.

***For waveforms 5 and 6, the MODE switch was set to TV.**

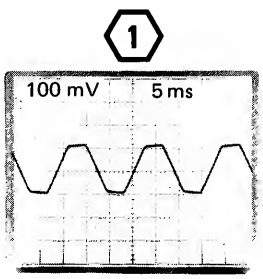

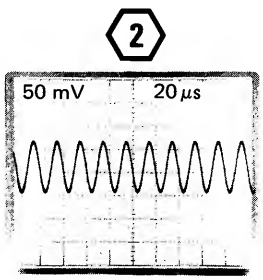

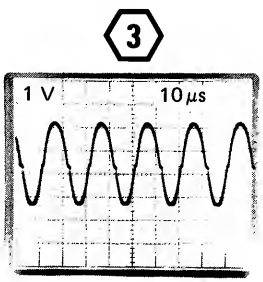

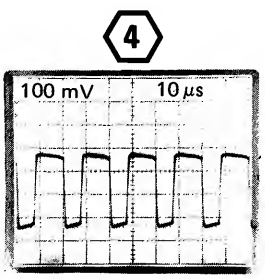

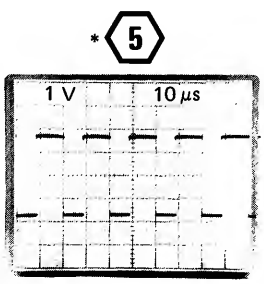

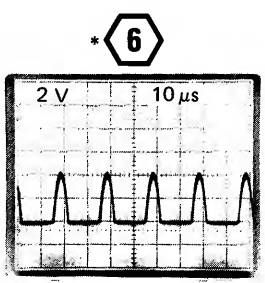

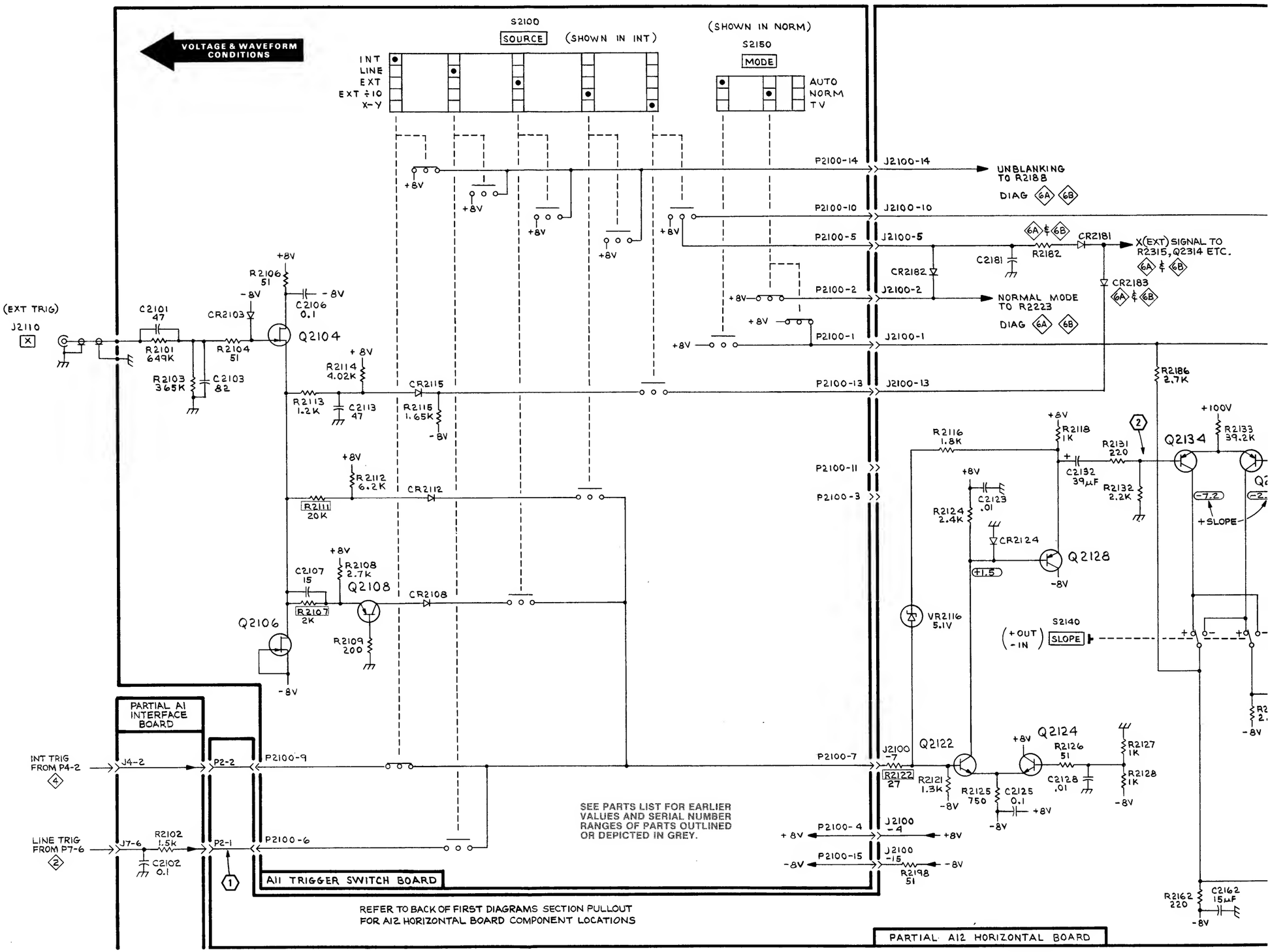

T932/T935

1983-48
REV. A, JULY 1977

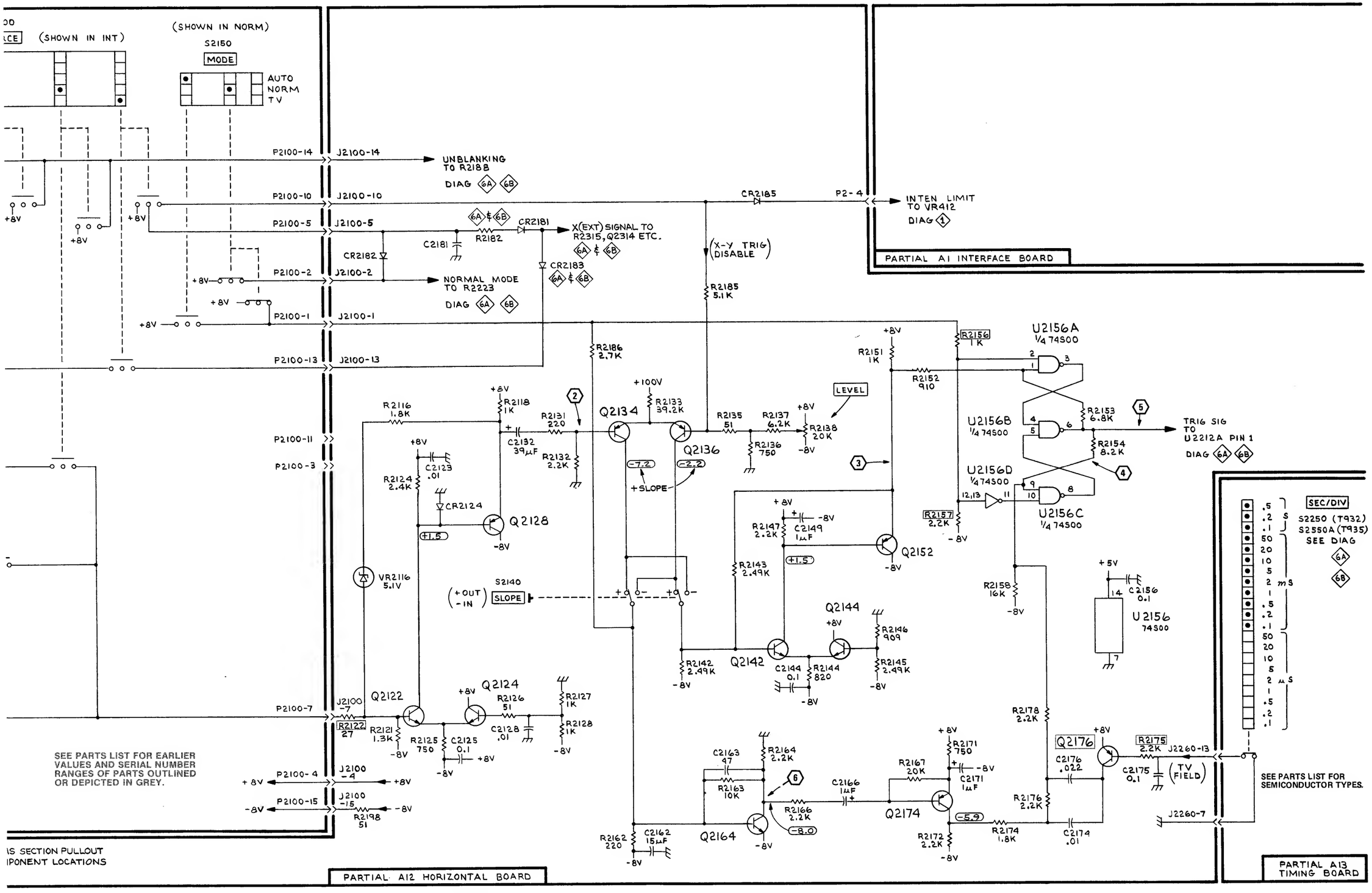

1983-48
REV. A, JULY 1977

TRIGGER 5

T932 SWEEP AND HORIZ AMPL CIRCUIT DESCRIPTION

Digital logic devices are used to perform some of the functions in this instrument. LO and HI designations are used in this circuit description to indicate the state of the digital circuit. HI indicates the more positive of the two levels. The specific voltages which constitute a LO and HI logic state may vary between individual devices.

SWEEP

The sweep is produced by a Miller Integrator circuit consisting of Q2242, Q2244, and Q2246. A sweep ramp is initiated at the collector of Q2246 when pin 3 of U2234A goes LO, and is terminated when pin 3 goes HI (see Timing diagram, Fig. 7-4).

In the NORM triggering mode, pin 2 of U2212A is HI allowing a positive-going trigger signal at pin 1 of U2212A to cause pin 3 of U2234A to go LO (via U2212D and U2234C). This reverse biases CR2233 and CR2234, and allows the timing capacitor (selected by the SEC/DIV switch, S2250) to charge, producing a sweep ramp at the collector of Q2246. When the sweep ramp reaches about 12 volts, Q2274 turns on. This causes pin 7 of U2224A to go LO, pin 8 of U2234C to go LO, and pin 3 of U2234A to go HI. When pin 3 of U2234A goes HI, CR2233 and CR2234 are forward biased, terminating the sweep. Pin 7 of U2224A remains LO for a length of time (hold-off time) determined by C2275, C2274, R2271, R2274, and the HOLD-OFF control, R2272. Three hold-off times are selected by the SEC/DIV switch S2250 and varied by R2272. After the selected hold-off time, U2224A pin 7 goes HI. This allows the next trigger signal to switch pin 3 of U2234A LO and again start the sweep.

In the AUTO triggering mode, when no trigger signal occurs at pin 11 of U2224B for about 50 ms, pin 10 of U2224B goes LO, causing the sweep to start after the hold-off time ends. This allows the sweep to free run and provide a reference display. When a trigger signal is present, pin 11 of U2224B goes HI, then LO (when trigger signal ends), and the time constant of C2226 and R2226 prevents pin 10 from going LO as long as the repetition rate of the trigger signal is higher than about 20 Hz.

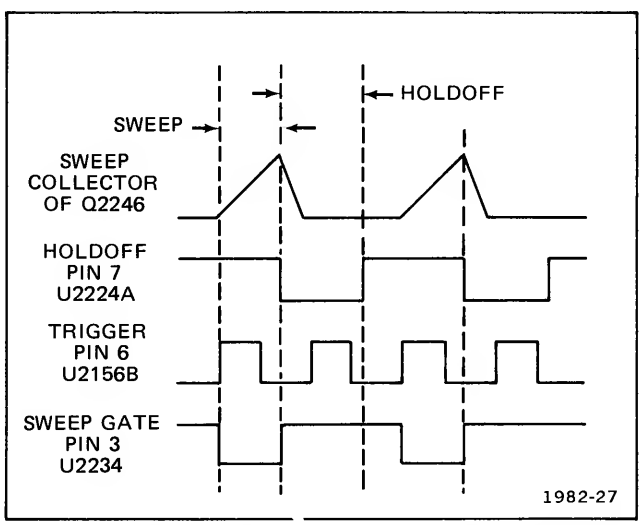

Fig. 7-4. Timing Diagram: sweep generator and sweep gate.

When pin 3 of U2234A goes HI, the current set by R2236, R2235, and R2237 is sent to the Z Axis Amplifier Q416 (see diagram 1) to blank the crt during hold-off.

HORIZONTAL AMPLIFIER

The horizontal amplifier converts the single-ended signal to a push-pull signal, which drives the crt horizontal deflection plates. The input of the horizontal amplifier comes from either the sweep generator or the X (external trigger) input connector. In the X-Y mode, the trace is shifted to the center of the screen by the current through R2182. In the AUTO and NORM modes, the input to the horizontal amplifier is a linear ramp from the sweep generator.

Transistors, Q2314, Q2326, and associated circuitry, form an operational amplifier with a variable gain range of over 10 to 1. The gain is set by feedback elements R2312, R2323, and X1-X10 control, R2322. The horizontal POSITION control, R2316, positions the crt display horizontally by varying the current into the base of Q2314. The cascode configuration of Q2314 and Q2326 improves the high frequency response.

When the BEAM FINDER switch, section S100B, is pressed, the dynamic range of Q2326 is decreased. This limits the horizontal deflection to the crt screen area. The BEAM FINDER switch (section S100A) also limits the vertical deflection to the crt screen area.

Transistors Q2332, Q2334. Q2344, and associated circuitry form a paraphase amplifier. Transistor Q2332 is a low-impedance input for Q2334. Horiz Cal adjustment R2332, sets the gain of the paraphase amplifier. When the current through the collector of Q2334 increases, the current through the collector of Q2344 decreases and is 180° out of phase with the current at the collector of Q2334. The resulting signal to the crt deflection plates is a push-pull signal. Diode CR2334 prevents Q2334 from saturating when R2322 is in the X10 position.

Since Q2334 is a shunt feedback amplifier and Q2344 is a common base amplifier, any noise in the 100 V power supply will appear as a part of the output. To prevent the noise from appearing on the crt screen, an operational amplifier, consisting of Q2354 and associated circuitry, supplies an inverted sample of the power supply noise to the output. Now, any noise in the 100 volt power supply appears common mode to the horizontal deflection plates, preventing horizontal deflection of the noise signal. Resistor R2354 provides feedback for the operational amplifier.

VII.2

VOLTAGE AND WAVEFORM CONDITIONS

VOLTAGE CONDITIONS

Voltages shown on this diagram were measured with a Tektronix DM 501 Digital Multimeter. Voltage measurements can vary as much as ±20%. No signals were applied to the vertical inputs or to the X (external trigger) input. Refer to Waveform Conditions for T932 or T935 control settings.

WAVEFORM CONDITIONS

Waveforms below were monitored with a Tektronix 7704A Oscilloscope, 7B71 Time Base, 7A15A Amplifier, and 10X probe. The oscilloscope input coupling was set to ac. Waveforms vary as much as ±20%.

A 50 kHz, 100 mV sine wave was applied to the CH 1 input and a 50 kHz, 2 V square wave was applied to the CH 2 input. A Tektronix FG 501 Function Generator provides either of the input waveforms.

The T932 controls were set as follows:

SOURCE	INT
MODE	AUTO
Vertical Mode	CH 1
CH 1 VOLTS/DIV	50 mV
CH 2 VOLTS/DIV	1 V
VAR (both)	Detent
AC-GND-DC (both)	DC
SEC/DIV	10 μs
1X-10X	1X
HOLD-OFF	Fully ccw
LEVEL	For triggered display

The other controls were set as necessary to obtain the desired display.

1

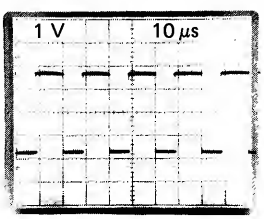

2

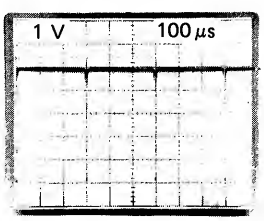

3

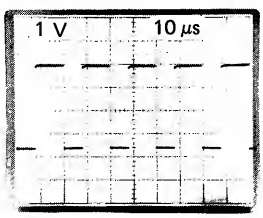

4

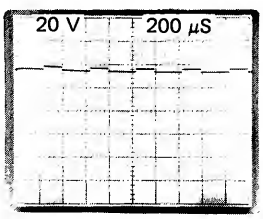

5

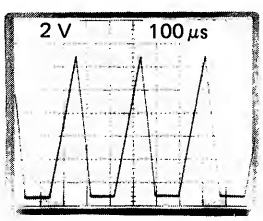

6

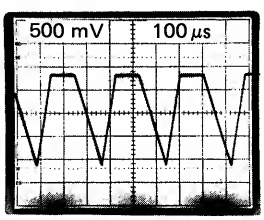

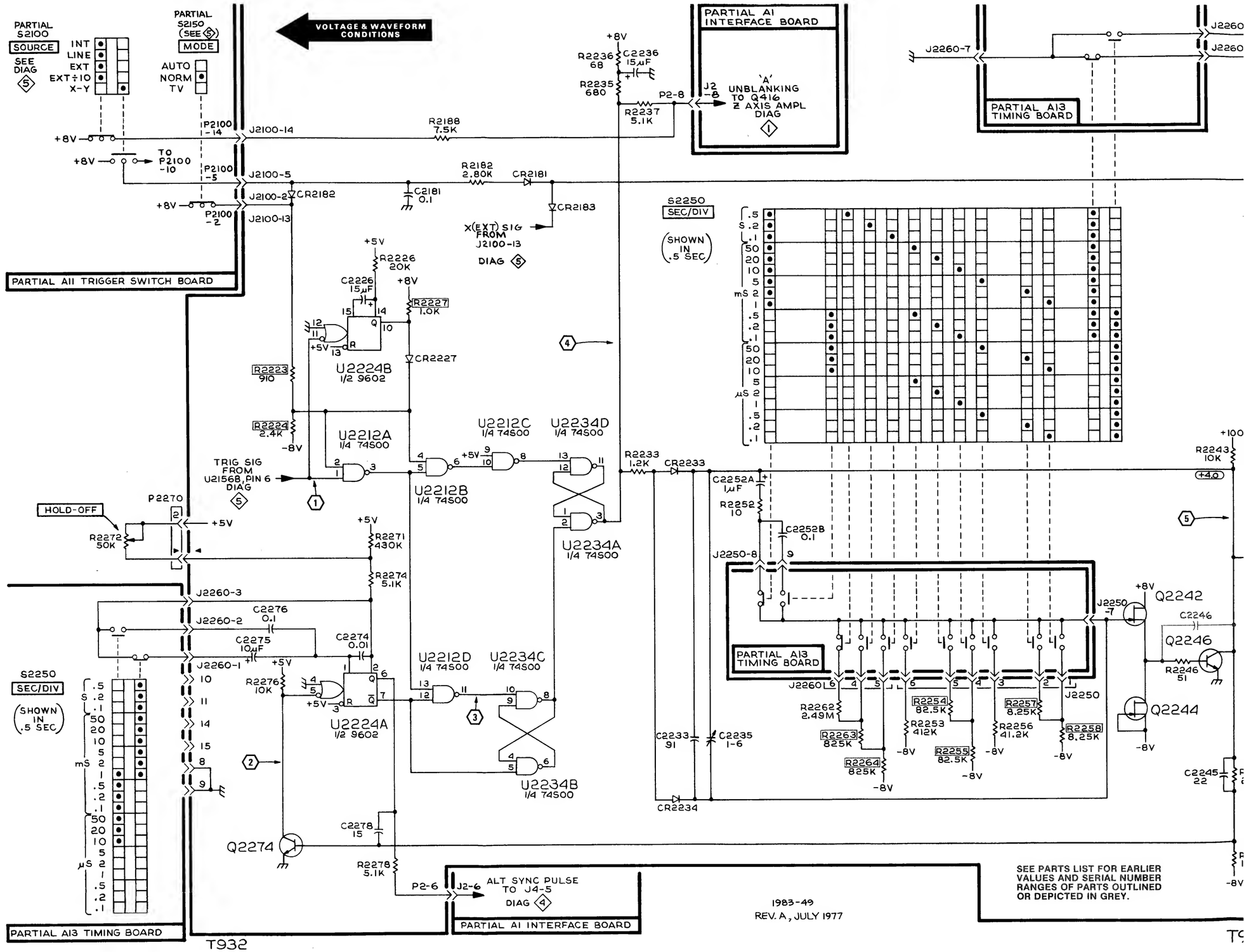
VOLTAGE & WAVEFORM CONDITIONS
PARTIAL S2100
SOURCE
SEE DIAG 5
INT
LINE
EXT
EXT÷10
X-Y
PARTIAL S2150 (SEE 5)
MODE
AUTO
NORM
TV
PARTIAL A1 INTERFACE BOARD
'A' UNBLANKING TO Q416 Z AXIS AMPL DIAG 1
PARTIAL A13 TIMING BOARD
PARTIAL A11 TRIGGER SWITCH BOARD
TO P2100 -10
X(EXT) SIG FROM J2100-13 DIAG 5
S2250
SEC/DIV
(SHOWN IN .5 SEC)
TRIG SIG FROM U2156B, PIN 6 DIAG 5
HOLD-OFF
U2224B 1/2 9602
U2224A 1/2 9602
U2212A 1/4 74S00
U2212B 1/4 74S00
U2212C 1/4 74S00
U2212D 1/4 74S00
U2234A 1/4 74S00
U2234B 1/4 74S00
U2234C 1/4 74S00
U2234D 1/4 74S00
Q2242
Q2246
Q2244
Q2274
ALT SYNC PULSE TO J4-5 DIAG 4
PARTIAL A13 TIMING BOARD
PARTIAL A1 INTERFACE BOARD
1983-49
REV. A, JULY 1977
SEE PARTS LIST FOR EARLIER VALUES AND SERIAL NUMBER RANGES OF PARTS OUTLINED OR DEPICTED IN GREY.
T932

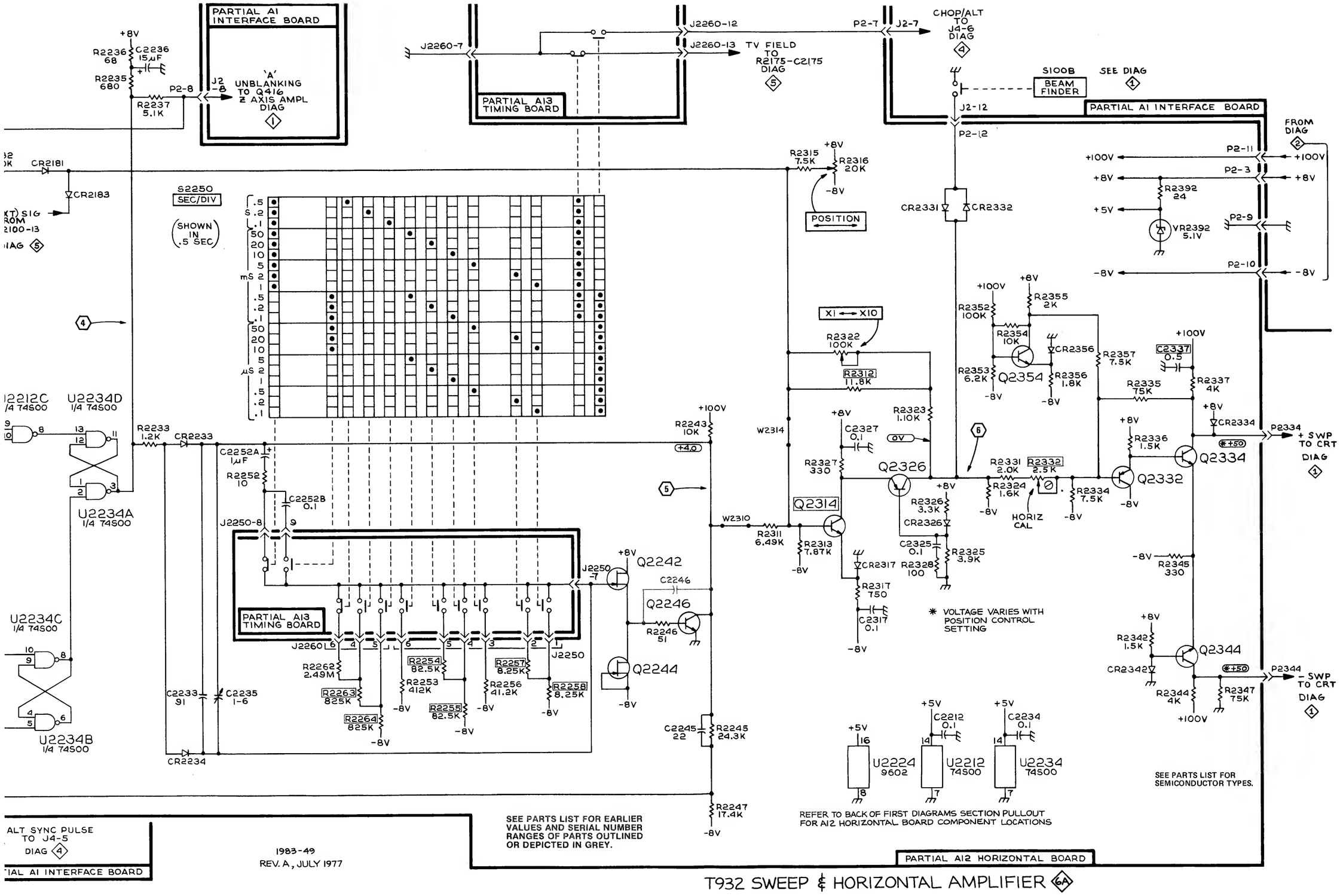

T932 SWEEP & HORIZONTAL AMPLIFIER 6A

T935 A SWEEP AND HORIZ AMPL CIRCUIT DESCRIPTION

A SWEEP GENERATOR

Digital logic devices are used to perform some of the functions in this instrument. LO and HI designations are used in this circuit description to indicate the state of the digital circuit. HI indicates the more positive of the two levels. The specific voltages which constitute a LO and HI logic state may vary between individual devices.

The A sweep is produced by a Miller Integrator circuit consisting of Q2242, Q2244, and Q2246. A sweep ramp is initiated at the collector of Q2246 when pin 3 of U2234A goes LO, and is terminated when pin 3 goes HI (see Timing diagram, Fig. 7-5).

In the NORM triggering mode, pin 2 of U2212A is HI allowing a positive-going trigger signal at pin 1 of U2212A to cause pin 3 of U2234A to go LO (via U2212D and U2234C). This reverse biases CR2233 and CR2234, and allows the timing capacitor (selected by the A SEC/DIV switch, S2250A) to charge, producing a sweep ramp at the collector of Q2246. When the sweep ramp reaches about 12 volts, Q2274 turns on. This causes pin 7 of U2224A to go LO, pin 8 of U2234C to go LO, and pin 3 of U2234A to go HI. When pin 3 of U2234A goes HI, CR2233 and CR2234 are forward biased, terminating the sweep. Pin 7 of U2224A remains LO for a length of time (hold-off time) determined by C2275, C2274, R2271, R2274, and the HOLD-OFF control, R2272. Three hold-off times are selected by the SEC/DIV switch S2250A and varied by R2272. After the selected hold-off time, U2224A pin 7 goes HI. This allows the next trigger signal to switch pin 3 of U2234A LO and again start the sweep.

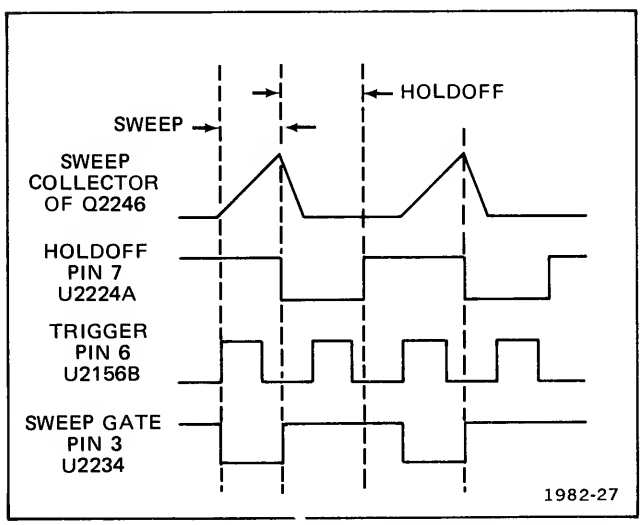

Fig. 7-5. Timing Diagram: sweep generator and sweep gate.

In the AUTO triggering mode, when no trigger signal occurs at pin 11 of U2224B for about 50 ms, pin 10 of U2224B goes LO, causing the sweep to start after the hold-off time ends. This allows the sweep to free run and provide a reference display. When a trigger signal is present, pin 11 of U2224B goes HI, then LO (when trigger signal ends), and the time constant of C2226 and R2226 prevents pin 10 from going LO as long as the repetition rate of the trigger signal is higher than about 20 Hz.

When the DISPLAY MODE switch S2510 (see diagram 7) is in the A or B modes, a signal is applied to Q416 in the Z Axis amplifier (see diagram 1) to blank the crt during hold-off time and unblank the crt during sweep time. In the A mode, when pin 3 of U2234A goes HI, R2236, R2235, and R2237 convert the voltage to a current for blanking and unblanking. Refer to T935 B Sweep circuit description for blanking and unblanking operation when S2510 is in B or A INTEN BY B modes.

HORIZONTAL AMPLIFIER

The horizontal amplifier converts the single-ended signal to a push-pull signal, which drives the crt horizontal deflection plates. The input of the horizontal amplifier comes from either the sweep generator or the X (external trigger) input connector. In the X-Y mode, the trace is shifted to the center of the screen by the current through R2182. In the AUTO and NORM modes, the input to the horizontal amplifier is a linear ramp from the sweep generator.

Transistors, Q2314, Q2326, and associated circuitry, form an operational amplifier with a variable gain range of over 10 to 1. The gain is set by feedback elements R2312, R2323, and X1-X10 control, R2322. The horizontal POSITION control, R2316, positions the crt display horizontally by varying the current into the base of Q2314. The cascode configuration of Q2314 and Q2326 improves the high frequency response.

When the BEAM FINDER switch, section S100B, is pressed, the dynamic range of Q2326 is decreased. This limits the horizontal deflection to the crt screen area. The BEAM FINDER switch (section S100A) also limits the vertical deflection to the crt screen area.

Transistors Q2332, Q2334. Q2344, and associated circuitry form a paraphase amplifier. Transistor Q2332 is a low-impedance input for Q2334. Horiz Cal adjustment R2332, sets the gain of the paraphase amplifier. When the current through the collector of Q2334 increases, the current through the collector of Q2344 decreases and is

180° out of phase with the current at the collector of Q2334. The resulting signal to the crt deflection plates is a push-pull signal. Diode CR2334 prevents Q2334 from saturating when R2322 is in the X10 position.

Since Q2334 is a shunt feedback amplifier and Q2344 is a common base amplifier, any noise in the 100 V power supply will appear as a part of the output. To prevent the noise from appearing on the crt screen, an operational amplifier, consisting of Q2354 and associated circuitry, supplies an inverted sample of the power supply noise to the output. Now, any noise in the 100 volt power supply appears common mode to the horizontal deflection plates, preventing horizontal deflection of the noise signal. Resistor R2354 provides feedback for the operational amplifier.

VIII.3

VOLTAGE AND WAVEFORM CONDITIONS

VOLTAGE CONDITIONS

Voltages shown on this diagram were measured with a Tektronix DM 501 Digital Multimeter. Voltage measurements can vary as much as ±20%. No signals were applied to the vertical inputs or to the X (external trigger) input. Refer to Waveform Conditions for T935 control settings.

WAVEFORM CONDITIONS

Waveforms below were monitored with a Tektronix 7704A Oscilloscope, 7B71 Time Base, 7A15A Amplifier, and 10X probe. The oscilloscope input coupling was set to ac. Waveforms vary as much as ±20%.

A 50 kHz, 100 mV sine wave was applied to the CH 1 input and a 50 kHz, 2 V square wave was applied to the CH 2 input. A Tektronix FG 501 Function Generator provides either of the input waveforms.

The T935 controls were set as follows:

SOURCE	INT
MODE	AUTO
Vertical Mode	CH 1
CH 1 VOLTS/DIV	50 mV
CH 2 VOLTS/DIV	1 V
VAR (both)	Detent
AC-GND-DC (both)	DC
DISPLAY MODE	A
A & B SEC/DIV	10 μs
1X-10X	1X
HOLD-OFF	Fully ccw
LEVEL	For triggered display

The other controls were set as necessary to obtain the desired display.

1

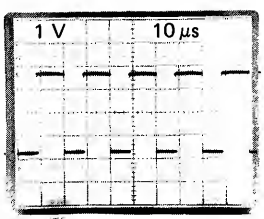

2

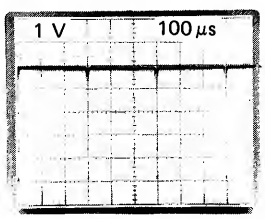

3

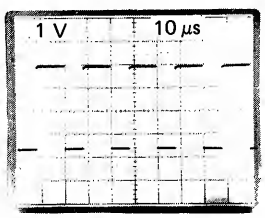

4

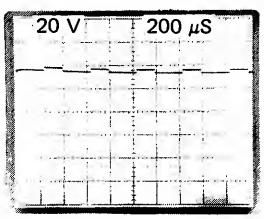

5

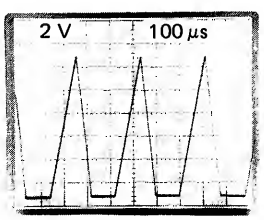

6

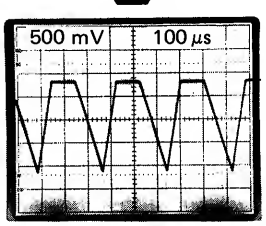

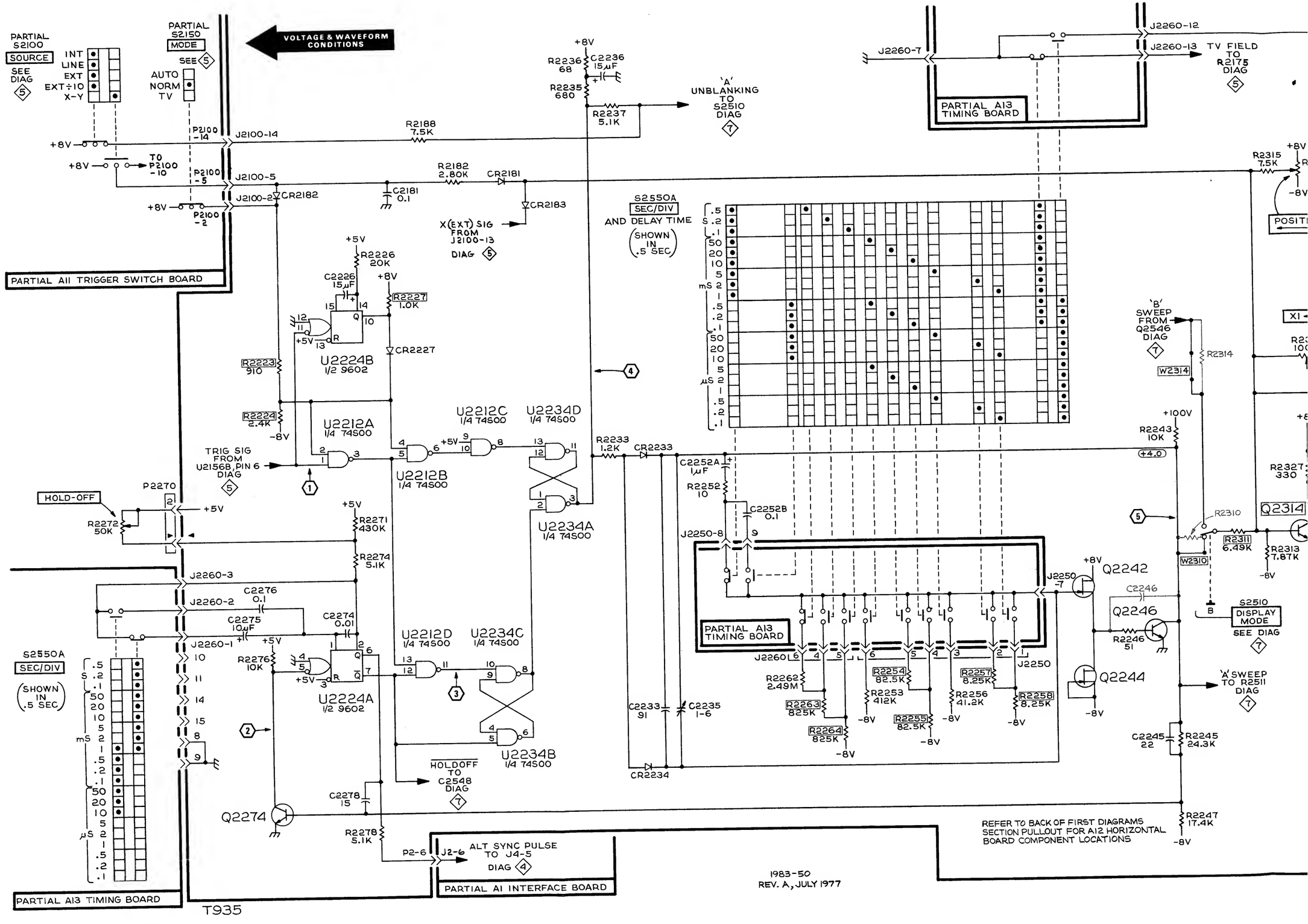
VOLTAGE & WAVEFORM CONDITIONS
PARTIAL S2100
SOURCE
SEE DIAG 5
INT
LINE
EXT
EXT÷10
X-Y
PARTIAL S2150
MODE
SEE 5
AUTO
NORM
TV
+8V
TO P2100 -10
P2100 -14
P2100 -5
P2100 -2
J2100-14
J2100-5
J2100-2
CR2182
R2188 7.5K
R2182 2.80K
CR2181
CR2183
C2181 0.1
X(EXT) SIG FROM J2100-13 DIAG 5
PARTIAL A11 TRIGGER SWITCH BOARD
R2236 68
C2236 15µF
R2235 680
R2237 5.1K
'A' UNBLANKING TO S2510 DIAG 7
J2260-7
J2260-12
J2260-13
TV FIELD TO R2175 DIAG 5
PARTIAL A13 TIMING BOARD
R2315 7.5K
POSITI
S2550A
SEC/DIV
AND DELAY TIME
(SHOWN IN .5 SEC)
+5V
R2226 20K
C2226 15µF
R2227 1.0K
U2224B 1/2 9602
CR2227
R2223 910
R2224 2.4K
-8V
U2212A 1/4 74S00
TRIG SIG FROM U2156B, PIN 6 DIAG 5
U2212B 1/4 74S00
U2212C 1/4 74S00
U2234D 1/4 74S00
U2234A 1/4 74S00
R2233 1.2K
CR2233
C2252A 1µF
R2252 10
C2252B 0.1
J2250-8
'B' SWEEP FROM Q2546 DIAG 7
R2314
W2314
+100V
R2243 10K
+4.0
R2327 330
Q2314
R2310
R2311 6.49K
R2313 7.87K
W2310
HOLD-OFF
P2270
R2272 50K
R2271 430K
R2274 5.1K
J2260-3
J2260-2
J2260-1
C2276 0.1
C2275 10µF
C2274 0.01
R2276 10K
U2224A 1/2 9602
U2212D 1/4 74S00
U2234C 1/4 74S00
U2234B 1/4 74S00
HOLDOFF TO C2548 DIAG 7
C2278 15
Q2274
R2278 5.1K
P2-6
J2-6
ALT SYNC PULSE TO J4-5 DIAG 4
PARTIAL A1 INTERFACE BOARD
PARTIAL A13 TIMING BOARD
J2250
Q2242
C2246
Q2246
R2246 51
Q2244
S2510
DISPLAY MODE
SEE DIAG 7
'A' SWEEP TO R2511 DIAG 7
R2262 2.49M
R2263 825K
R2264 825K
R2254 82.5K
R2253 412K
R2255 82.5K
R2257 8.25K
R2256 41.2K
R2258 8.25K
C2233 91
C2235 1-6
CR2234
C2245 22
R2245 24.3K
R2247 17.4K
REFER TO BACK OF FIRST DIAGRAMS SECTION PULLOUT FOR A12 HORIZONTAL BOARD COMPONENT LOCATIONS
1983-50
REV. A, JULY 1977
T935

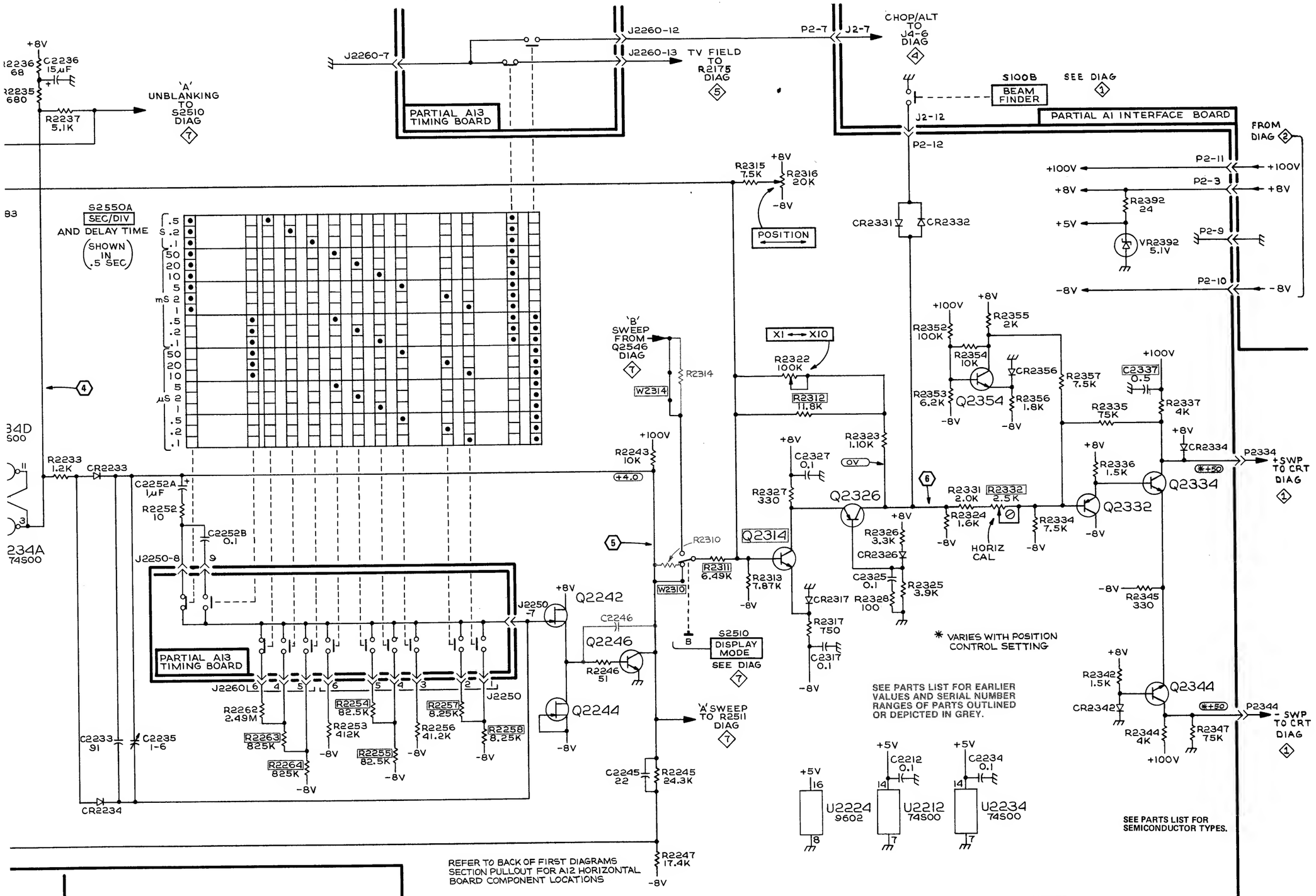

T935 A SWEEP & HORIZ AMPL 6B

T935 B SWEEP CIRCUIT DESCRIPTION

Digital logic devices are used to perform some of the functions in this instrument. LO and HI designations are used in this circuit description to indicate the state of the digital circuit. HI indicates the more positive of the two levels. The specific voltages which constitute a LO and HI logic state may vary between individual devices.

The DISPLAY MODE switch S2510 selects A, B, or A INTEN BY B. In the A position, the B sweep is disconnected from the Horizontal Output Amplifier. In the B position, the A sweep is disconnected from the Horizontal Output Amplifier and the B sweep starts after the delay. In the A INTEN BY B position, the A sweep is connected to the Horizontal Output Amplifier. In this mode, the A sweep starts and then after the delay, the B sweep runs and intensifies a portion of the A sweep.

With the B mode selected, when pin 3 of U2524B goes HI, R2539, R2537, and R2532 convert the voltage at pin 3 to a current signal. This signal is applied to Q416 in the Z-Axis amplifier (see diagram 1) to blank the crt during hold-off and unblank the crt during B sweep time. With S2510 in the A INTEN BY B mode, R2539, R2537, R2533 and R2531 provide the B sweep current source for Q416. This current signal is combined with the A sweep blanking and unblanking current signal from R2237 (see diagram 6B), allowing the A sweep to be intensified by the B sweep.

A Miller Integrator circuit consisting of Q2542, Q2544, Q2546, and associated circuitry, produces B sweep. The sweep ramp is initiated at the collector of Q2546 when pin 3 of U2524B goes LO, and is terminated when pin 3 of U2524B goes HI.

When pin 3 of U2524B goes LO, CR2535 and CR2536 are reverse biased. This allows the timing capacitor (selected by the B SEC/DIV switch S2550B) to charge, producing a sweep ramp at the collector of Q2546. When the sweep ramp reaches about 12 V, Q2548 turns on, causing pin 3 of U2524B to go HI. The HI at pin 3 of U2524B forward biases CR2535 and CR2536, ending the B sweep. If the A sweep ends before Q2548 turns on (before the B sweep ends), the Hold-off signal from pin 7 of U2224A causes pin 1 of U2524B to go LO. This in turn, causes pin 3 of U2524B to go HI, ending the B sweep. Pin 3 of U2524B will remain HI until pin 5 of U2524A goes LO again.

Transistors Q2514 and Q2516 make up a voltage comparator. The DELAY TIME POSITION control, R2516, sets the voltage at the base of Q2516. Initially, Q2514 is turned on, and Q2516 and Q2522 are turned off. The A sweep ramp from the collector of Q2246 increases the voltage at the base of Q2514. When the base of Q2514 is at the same voltage as the base of Q2516, Q2514 turns off, and Q2516 and Q2522 turn on. Components C2521 and R2521 provide feedback for a fast switch of Q2522, causing a sharp negative pulse through C2525. This pulse produces a LO at pin 5 of U2524A. The LO at pin 5 of U2524A produces a LO at pin 3 of U2524B which starts the B sweep. CR2514 and CR2516 are protection diodes. When S2510 is in the A position, the base of Q2522 is grounded, preventing the B sweep from starting.

VOLTAGE AND WAVEFORM CONDITIONS

VOLTAGE CONDITIONS

Voltages shown on this diagram were measured with a Tektronix DM 501 Digital Multimeter. Voltage measurements can vary as much as ±20%. No signals were applied to the vertical inputs or to the X (external trigger) input. Refer to Waveform Conditions for T935 control settings.

WAVEFORM CONDITIONS

Waveforms below were monitored with a Tektronix 7704A Oscilloscope, 7B71 Time Base, 7A15A Amplifier, and 10X probe. The oscilloscope input coupling was set to ac. Waveforms vary as much as ±20%.

A 50 kHz, 100 mV sine wave was applied to the CH 1 input and a 50 kHz, 2 V square wave was applied to the CH 2 input. A Tektronix FG 501 Function Generator provides either of the input waveforms.

The T932 or T935 controls were set as follows:

SOURCE	INT
MODE	AUTO
Vertical Mode	CH 1
CH 1 VOLTS/DIV	50 mV
CH 2 VOLTS/DIV	1 V
VAR (both)	Detent
AC-GND-DC (both)	DC
DISPLAY MODE	B
A & B SEC/DIV	10 μs
1X-10X	1X
HOLD-OFF	Fully ccw
DELAY TIME POSITION	Midrange
LEVEL	For triggered display

The other controls were set as necessary to obtain the desired display.

1

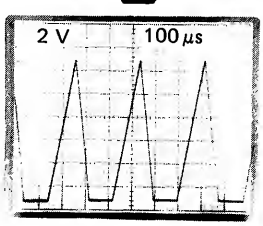

2

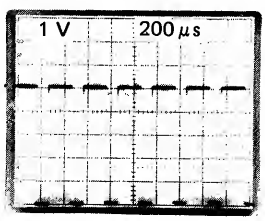

3

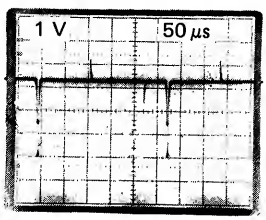

4

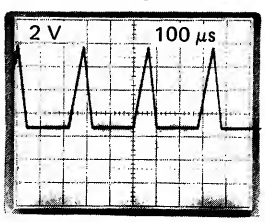

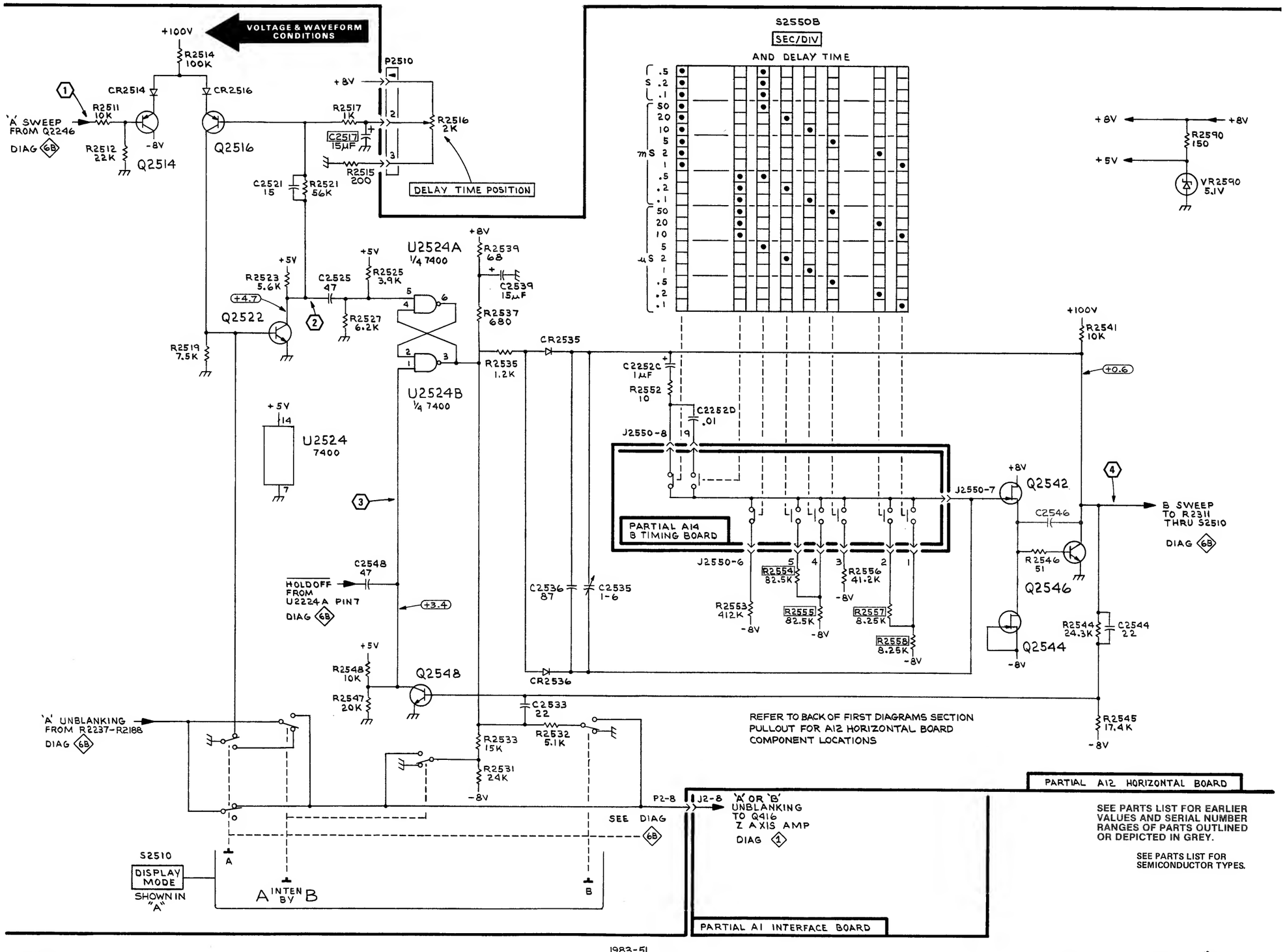
VOLTAGE & WAVEFORM CONDITIONS
+100V
R2514 100K
CR2514
CR2516
R2511 10K
'A' SWEEP FROM Q2246
DIAG 6B
R2512 22K
-8V
Q2514
Q2516
P2510
+8V
R2517 1K
C2517 15µF
R2515 200
R2516 2K
DELAY TIME POSITION
C2521 15
R2521 56K
S2550B
SEC/DIV
AND DELAY TIME
+5V
R2523 5.6K
+4.7
Q2522
C2525 47
R2525 3.9K
R2527 6.2K
U2524A
1/4 7400
R2539 68
C2539 15µF
R2537 680
U2524B
1/4 7400
R2535 1.2K
CR2535
R2519 7.5K
U2524
7400
C2252C 1µF
R2552 10
C2252D .01
J2550-8
J2550-7
J2550-6
PARTIAL A14 B TIMING BOARD
R2554 82.5K
R2556 41.2K
R2553 412K
R2555 82.5K
R2557 8.25K
R2558 8.25K
C2536 87
C2535 1-6
CR2536
C2548 47
HOLDOFF FROM U2224A PIN 7
DIAG 6B
+3.4
R2548 10K
R2547 20K
Q2548
C2533 22
R2533 15K
R2532 5.1K
R2531 24K
'A' UNBLANKING FROM R2237-R2188
DIAG 6B
P2-8
J2-8
'A' OR 'B' UNBLANKING TO Q416 Z AXIS AMP
DIAG 1
SEE DIAG 6B
S2510
DISPLAY MODE
SHOWN IN "A"
A INTEN BY B
PARTIAL A1 INTERFACE BOARD
+100V
R2541 10K
+0.6
Q2542
C2546
R2546 51
Q2546
Q2544
B SWEEP TO R2311 THRU S2510
DIAG 6B
R2544 24.3K
C2544 22
R2545 17.4K
REFER TO BACK OF FIRST DIAGRAMS SECTION PULLOUT FOR A12 HORIZONTAL BOARD COMPONENT LOCATIONS
PARTIAL A12 HORIZONTAL BOARD
R2590 150
VR2590 5.1V
SEE PARTS LIST FOR EARLIER VALUES AND SERIAL NUMBER RANGES OF PARTS OUTLINED OR DEPICTED IN GREY.
SEE PARTS LIST FOR SEMICONDUCTOR TYPES.

FIG. 1 EXPLODED VIEW

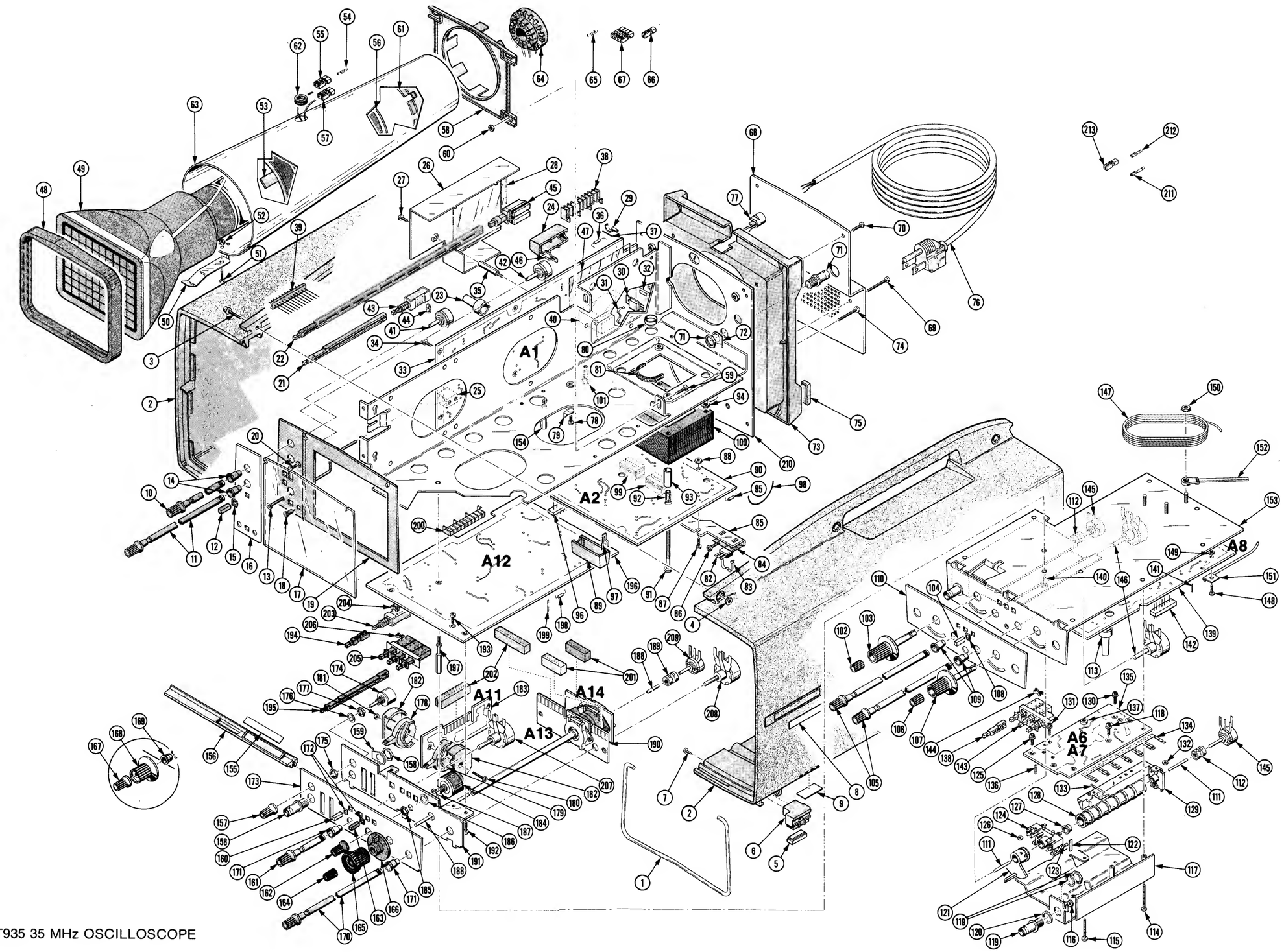

REPLACEABLE MECHANICAL PARTS

PARTS ORDERING INFORMATION

Replacement parts are available from or through your local Tektronix, Inc. Field Office or representative.

Changes to Tektronix instruments are sometimes made to accommodate improved components as they become available, and to give you the benefit of the latest circuit improvements developed in our engineering department. It is therefore important, when ordering parts, to include the following information in your order: Part number, instrument type or number, serial number, and modification number if applicable.

If a part you have ordered has been replaced with a new or improved part, your local Tektronix, Inc. Field Office or representative will contact you concerning any change in part number.

Change information, if any, is located at the rear of this manual.

SPECIAL NOTES AND SYMBOLS

X000	Part first added at this serial number
00X	Part removed after this serial number

FIGURE AND INDEX NUMBERS

Items in this section are referenced by figure and index numbers to the illustrations.

INDENTATION SYSTEM

This mechanical parts list is indented to indicate item relationships. Following is an example of the indentation system used in the description column.

1 2 3 4 5 Name & Description

Assembly and/or Component
Attaching parts for Assembly and/or Component
- - - * - - -
Detail Part of Assembly and/or Component
Attaching parts for Detail Part
- - - * - - -
Parts of Detail Part
Attaching parts for Parts of Detail Part
- - - * - - -

Attaching Parts always appear in the same indentation as the item it mounts, while the detail parts are indented to the right. Indented items are part of, and included with, the next higher indentation. The separation symbol - - - * - - - indicates the end of attaching parts.

Attaching parts must be purchased separately, unless otherwise specified.

ITEM NAME

In the Parts List, an Item Name is separated from the description by a colon (:). Because of space limitations, an Item Name may sometimes appear as incomplete. For further Item Name identification, the U.S. Federal Cataloging Handbook H6-1 can be utilized where possible.

ABBREVIATIONS

"	INCH
#	NUMBER SIZE
ACTR	ACTUATOR
ADPTR	ADAPTER
ALIGN	ALIGNMENT
AL	ALUMINUM
ASSEM	ASSEMBLED
ASSY	ASSEMBLY
ATTEN	ATTENUATOR
AWG	AMERICAN WIRE GAGE
BD	BOARD
BRKT	BRACKET
BRS	BRASS
BRZ	BRONZE
BSHG	BUSHING
CAB	CABINET
CAP	CAPACITOR
CER	CERAMIC
CHAS	CHASSIS
CKT	CIRCUIT
COMP	COMPOSITION
CONN	CONNECTOR
COV	COVER
CPLG	COUPLING
CRT	CATHODE RAY TUBE
DEG	DEGREE
DWR	DRAWER
ELCTRN	ELECTRON
ELEC	ELECTRICAL
ELCTLT	ELECTROLYTIC
ELEM	ELEMENT
EPL	ELECTRICAL PARTS LIST
EQPT	EQUIPMENT
EXT	EXTERNAL
FIL	FILLISTER HEAD
FLEX	FLEXIBLE
FLH	FLAT HEAD
FLTR	FILTER
FR	FRAME or FRONT
FSTNR	FASTENER
FT	FOOT
FXD	FIXED
GSKT	GASKET
HDL	HANDLE
HEX	HEXAGON
HEX HD	HEXAGONAL HEAD
HEX SOC	HEXAGONAL SOCKET
HLCPS	HELICAL COMPRESSION
HLEXT	HELICAL EXTENSION
HV	HIGH VOLTAGE
IC	INTEGRATED CIRCUIT
ID	INSIDE DIAMETER
IDENT	IDENTIFICATION
IMPLR	IMPELLER
IN	INCH
INCAND	INCANDESCENT
INSUL	INSULATOR
INTL	INTERNAL
LPHLDR	LAMPHOLDER
MACH	MACHINE
MECH	MECHANICAL
MTG	MOUNTING
NIP	NIPPLE
NON WIRE	NOT WIRE WOUND
OBD	ORDER BY DESCRIPTION
OD	OUTSIDE DIAMETER
OVH	OVAL HEAD
PH BRZ	PHOSPHOR BRONZE
PL	PLAIN or PLATE
PLSTC	PLASTIC
PN	PART NUMBER
PNH	PAN HEAD
PWR	POWER
RCPT	RECEPTACLE
RES	RESISTOR
RGD	RIGID
RLF	RELIEF
RTNR	RETAINER
SCH	SOCKET HEAD
SCOPE	OSCILLOSCOPE
SCR	SCREW
SE	SINGLE END
SECT	SECTION
SEMICOND	SEMICONDUCTOR
SHLD	SHIELD
SHLDR	SHOULDERED
SKT	SOCKET
SL	SLIDE
SLFLKG	SELF-LOCKING
SLVG	SLEEVING
SPR	SPRING
SQ	SQUARE
SST	STAINLESS STEEL
STL	STEEL
SW	SWITCH
T	TUBE
TERM	TERMINAL
THD	THREAD
THK	THICK
TNSN	TENSION
TPG	TAPPING
TRH	TRUSS HEAD
V	VOLTAGE
VAR	VARIABLE
W/	WITH
WSHR	WASHER
XFMR	TRANSFORMER
XSTR	TRANSISTOR

CROSS INDEX—MFR. CODE NUMBER TO MANUFACTURER

Mfr. Code	Manufacturer	Address	City, State, Zip
00779	AMP, INC.	P O BOX 3608	HARRISBURG, PA 17105
01295	TEXAS INSTRUMENTS, INC., SEMICONDUCTOR GROUP	P O BOX 5012, 13500 N CENTRAL EXPRESSWAY	DALLAS, TX 75222
05091	TRI-ORDINATE CORPORATION	343 SNYDER AVENUE	BERKELEY HEIGHTS, NJ 07922
11897	PLASTIGLIDE MFG. CORPORATION	P O BOX 867, 1757 STANFORD ST.	SANTA MONICA, CA 90406
12697	CLAROSTAT MFG. CO., INC.	LOWER WASHINGTON STREET	DOVER, NH 03820
22526	BERG ELECTRONICS, INC.	YOUK EXPRESSWAY	NEW CUMBERLAND, PA 17070
27264	MOLEX PRODUCTS CO.	5224 KATRINE AVE.	DOWNERS GROVE, IL 60515
28520	HEYMAN MFG. CO.	147 N. MICHIGAN AVE.	KENILWORTH, NJ 07033
55210	GETTIG ENG. AND MFG. COMPANY	PO BOX 85, OFF ROUTE 45	SPRING MILLS, PA 16875
59730	THOMAS AND BETTS COMPANY	36 BUTLER ST.	ELIZABETH, NJ 07207
70485	ATLANTIC INDIA RUBBER WORKS, INC.	571 W. POLK ST.	CHICAGO, IL 60607
71279	CAMBRIDGE THERMIONIC CORP.	445 CONCORD AVE.	CAMBRIDGE, MA 02138
71590	CENTRALAB ELECTRONICS, DIV. OF GLOBE-UNION, INC.	P O BOX 858	FORT DODGE, IA 50501
72228	CONTINENTAL SCREW CO., DIV. OF AMTEL, INC.	459 MT. PLEASANT	NEW BEDFORD, MA 02742
73743	FISCHER SPECIAL MFG. CO.	446 MORGAN ST.	CINCINNATI, OH 45206
74445	HOLO-KROME CO.	31 BROOK ST. WEST	HARTFORD, CT 06110
77250	PHEOLL MANUFACTURING CO., DIVISION OF ALLIED PRODUCTS CORP.	5700 W. ROOSEVELT RD.	CHICAGO, IL 60650
78189	ILLINOIS TOOL WORKS, INC. SHAKEPROOF DIVISION	ST. CHARLES ROAD	ELGIN, IL 60120
78471	TILLEY MFG. CO.	900 INDUSTRIAL RD.	SAN CARLOS, CA 94070
80009	TEKTRONIX, INC.	P O BOX 500	BEAVERTON, OR 97077
83385	CENTRAL SCREW CO.	2530 CRESCENT DR.	BROADVIEW, IL 60153
98159	RUBBER TECK, INC.	19115 HAMILTON AVE., P O BOX 389	GARDENA, CA 90247
99742	PERMACEL DIV. OF JOHNSON AND JOHNSON	U. S. HIGHWAY 1	NEW BRUNSWICK, NJ 08901

Fig. & Index No.	Tektronix Part No.	Serial/Model No. Eff	Dscont	Qty	1 2 3 4 5 Name & Description	Mfr Code	Mfr Part Number
1-1	348-0443-00			1	STAND,ELEC EQUIP:0.156" DIA,SST,PASSIVATE	80009	348-0443-00
-2	437-0200-00			1	CABINET,SCOPE:ASSEMBLY	80009	437-0200-00
					(ATTACHING PARTS)		
-3	211-0648-00			6	SCR,ASSEM WSHR:6-32 X 0.625 INCH,PNH STL	83385	OBD
-4	210-0408-00			6	NUT,PLAIN,HEX.:6-32 X 0.312 INCH,BRS	73743	3040-402
					- - - * - - -		
	----- -----			-	. CABINET ASSY INCLUDES:		
-5	348-0441-00			4	. FOOT,CABINET:POLYURETHANE,BLACK	80009	348-0441-00
-6	348-0447-01			2	. FOOT,CABINET:FRONT,BLACK PLASTIC	80009	348-0447-01
	348-0447-00			2	. FOOT,CABINET:REAR,BLACK PLASTIC	80009	348-0447-00
					(ATTACHING PARTS FOR EACH)		
-7	213-0731-00			1	. SCR,TPG,THD FOR:6-19 X 0.5 INCCH,PNH STL	72228	OBD
					- - - * - - -		
-8	334-2682-00			2	. PLATE,IDENT:2.50" LONG--TEKTRONIX	80009	334-2682-00
-9	334-2624-00			1	. PLATE,IDENT:MARKED--DC BAL,CH1 AND CH2	80009	334-2624-00
	351-0458-00			1	. GUIDE,LINE ADJ:HI-LO	80009	351-0458-00
	351-0458-01			1	. GUIDE,LINE ADJ:115V-230V	80009	351-0458-01
-10	384-1371-01			1	EXTENSION SHAFT:5.2" LONG W/KNOB	80009	384-1371-01
-11	384-1371-03			1	EXTENSION SHAFT:10.7" LONG W/KNOB	80009	384-1371-03
-12	366-1559-00			2	PUSH BUTTON:GRAY	80009	366-1559-00
-13	214-2309-00			1	CONDUCTOR,LIGHT:5.265" LONG	80009	214-2309-00
-14	358-0550-00			2	BUSHING,SHAFT:0.15 ID X 0.3INCH OD,PLSTC	80009	358-0550-00
-15	426-1072-00			1	FRAME,PUSH BTN:PLASTIC	80009	426-1072-00
-16	333-2078-00			1	PANEL,FRONT:	80009	333-2078-00
-17	337-2185-00			1	SHLD,IMPLOSION:BLUE	80009	337-2185-00
-18	136-0387-01			1	JACK,TIP:BLACK	71279	450-4352-01-0310
-19	386-3287-00			1	SUBPANEL,FRONT:CRT,PLASTIC	80009	386-3287-00
					(ATTACHING PARTS)		
-20	213-0146-00			1	SCR,TPG,THD FOR:6-20 X 0.313 INCH,PNH STL	83385	OBD
					- - - * - - -		
-21	384-1370-00			1	EXTENSION SHAFT:4.68" L,MOLDED PLSTC	80009	384-1370-00
-22	384-1364-00			1	EXTENSION SHAFT:10.818" L,NYLON,BLK	80009	384-1364-00
-23	351-0456-00			2	GUIDE,RES ADJ:PLASTIC	80009	351-0456-00
-24	352-0425-00			1	FUSEHOLDER:PLASTIC	80009	352-0425-00
-25	352-0331-00			1	LAMPHOLDER:	80009	352-0331-00
-26	337-2227-00			1	SHIELD,ELEC:HIGH VOLTAGE POWER SUPPLY	80009	337-2227-00
					(ATTACHING PARTS)		
-27	211-0007-00			2	SCREW,MACHINE:4-40 X 0.188 INCH,PNH STL	83385	OBD
					- - - * - - -		
-28	342-0293-00			1	INSULATOR,SHLD:HIGH VOLTAGE	80009	342-0293-00
-29	343-0213-00			2	CLAMP,LOOP:PRESS MT,PLASTIC	80009	343-0213-00
-30	----- -----			1	TRANSISTOR:CHASSIS MTG(SEE Q458 EPL)		
					(ATTACHING PARTS)		
-31	344-0236-01			1	CLIP,SPR TNSN:TRANSISTOR MOUNTING,COPPER	80009	344-0236-01
					- - - * - - -		
	342-0202-00			1	INSULATOR,PLATE:TRANSISTOR	01295	10-21-023-106
-32	253-0202-00			FT	INSUL TAPE,ELEC:POLYMIDE,0.875" W X 1.0"	99742	221
-33	----- -----			1	CKT BOARD ASSY:INTERFACE(SEE A1 EPL)		
					(ATTACHING PARTS)		
-34	211-0008-00			6	SCREW,MACHINE:4-40 X 0.25 INCH,PNH STL	83385	OBD
-35	361-0750-00			2	SPACER,POST:0.188 HEX X 0.970"L,STL,W/STUD	80009	361-0750-00
					- - - * - - -		
	----- -----			-	. CKT BOARD ASSY INCLUDES:		
	131-0566-00	B010100	B011081X	1	. LINK,TERM.CONNE:0.086 DIA X 2.375 INCH L	55210	ERD-18T0
	131-0566-00	B010100	B011303X	1	. LINK,TERM.CONNE:0.086 DIA X 2.375 INCH L	55210	ERD-18T0
-36	131-1817-00	B010100	B011081	34	. LINK,TERM CONNE:22 AWG,2.25" LONG	80009	131-1817-00
	131-1817-00	B010100	B011303	34	. LINK,TERM CONNE:22 AWG,2.25" LONG	80009	131-1817-00
	131-1817-00	B011082		35	. LINK,TERM CONNE:22 AWG,2.25" LONG	80009	131-1817-00
	131-1817-00	B011304		35	. LINK,TERM CONNE:22 AWG,2.25" LONG	80009	131-1817-00
-37	131-0608-00			17	. CONTACT,ELEC:0.365 INCH LONG	22526	47357
-38	131-1749-00			1	. CONNECTOR,RCPT,:10 FEMALE CONTACT	27264	09-52-3101
	131-1795-00			1	. CONNECTOR,RCPT,:12 FEMALE CONTACT,RT-ANGLE	27264	09-62-3121
-39	131-1792-00			1	. CONTACT ASSY,EL:12 MALE CONTACT,FLAT WAFER	27264	09-70-2121

Fig. & Index No.	Tektronix Part No.	Serial/Model No. Eff	Dscont	Qty	1 2 3 4 5 Name & Description	Mfr Code	Mfr Part Number
1-40	----- -----			1	. TRANSFORMER:H.V.(SEE T460 EPL)		
	361-0007-00			3	. SPACER,SLEEVE:0.250 INCH DIA,PLASTIC	80009	361-0007-00
-41	----- -----			1	. RES.,VAR:INTENSITY(SEE R412 EPL)		
-42	----- -----			1	. RES.,VAR:FOCUS(SEE R468 EPL)		
-43	----- -----			1	. SWITCH,PUSH:BEAMFINDER(SEE S410 EPL)		
-44	361-0608-00			2	. SPACER,PUSH SW:PLASTIC	80009	361-0608-00
-45	----- -----			1	. SWITCH,PUSH:POWER ON(SEE S700 EPL)		
-46	344-0154-00			2	. CLIP,ELECTRICAL:FOR 0.25 INCH DIA FUSE	80009	344-0154-00
-47	342-0294-00			1	INSULATOR,FILM:MAIN CHASSIS	80009	342-0294-00
-48	386-3291-00			1	SUPPORT,CRT:FRONT	80009	386-3291-00
-49	----- -----			1	ELECTRON TUBE:CRT,W/ANODE(SEE V470 EPL)		
	334-1379-00			1	LABEL:CRT,ADHESIVE BACK	80009	334-1379-00
	334-1951-00			1	MARKER,IDENT:CRT WARNING	80009	334-1951-00
-50	214-2300-00			1	CLIP,GROUNDING:0.3 W X 2.0" LONG,BRS	80009	214-2300-00
					(ATTACHING PARTS)		
-51	211-0008-00			1	SCREW,MACHINE:4-40 X 0.25 INCH,PNH STL	83385	OBD
-52	210-0586-00			1	NUT,PLAIN,EXT W:4-40 X 0.25 INCH,STL	78189	OBD
					- - - * - - -		
-53	----- -----			1	COIL,TUBE DEFL:TRACE ROTATION(SEE L472 EPL)		
-54	131-0707-00			2	. CONTACT,ELEC:0.48"L,22-26 AWG WIRE	22526	75691-005
-55	352-0169-01			1	. CONN BODY,PL,EL:2 WIRE BROWN	80009	352-0169-01
-56	----- -----			1	COIL,TUBE DEFL:X-Y ALIGNMENT(SEE L470 EPL)		
	131-0707-00			2	. CONTACT,ELEC:0.48"L,22-26 AWG WIRE	22526	75691-005
-57	352-0169-00			1	. CONN BODY,PL,EL:2 WIRE BLACK	80009	352-0169-00
-58	386-3288-00			1	SPRT,CRT SHIELD:REAR	80009	386-3288-00
					(ATTACHING PARTS)		
-59	211-0507-00			2	SCREW,MACHINE:6-32 X 0.312 INCH,PNH STL	83385	OBD
-60	220-0419-00			2	NUT,PLAIN,SQ:6-32 X 0.312 INCH,STL	83385	OBD
					- - - * - - -		
-61	386-3305-00			1	SUPPORT,CRT:REAR	80009	386-3305-00
-62	348-0004-00			1	GROMMET,RUBBER:0.281 ID X 0.563 INCH OD	70485	763
-63	337-2223-00			1	SHIELD,ELEC:CRT	80009	337-2223-00
	136-0645-00			1	SOCKET,CRT:ASSEMBLY	80009	136-0645-00
-64	136-0202-01			1	. SOCKET,PLUG-IN:14 PIN	80009	136-0202-01
-65	131-0707-00			9	. CONTACT,ELEC:0.48"L,22-26 AWG WIRE	22526	75691-005
-66	352-0171-00			1	. CONN BODY,PL,EL:1 WIRE BLACK	80009	352-0171-00
-67	352-0162-00			2	. CONN BODY,PL,EL:4 WIRE BLACK	80009	352-0162-00
-68	386-3289-00			1	PANEL,REAR:	80009	386-3289-00
					(ATTACHING PARTS)		
-69	211-0529-00			2	SCREW,MACHINE:6-32 X 1.25 INCHES,PNH STL	83385	OBD
-70	211-0578-00			2	SCREW,MACHINE:6-32 X 0.438 1NCH,PNH STL	83385	OBD
					- - - * - - -		
-71	131-0955-00			1	CONNECTOR,RCPT,:BNC,FEMALE,W/HARDWARE	05091	31-279
					(ATTACHING PARTS)		
-72	210-0255-00			1	TERMINAL,LUG:0.391" ID INT TOOTH	80009	210-0255-00
					- - - * - - -		
-73	200-1811-00			1	COVER,REAR:ASSEMBLY	80009	200-1811-00
					(ATTACHING PARTS)		
-74	211-0517-00			2	SCREW,MACHINE:6-32 X 1 INCH,PNH,STL	83385	OBD
					- - - * - - -		
	----- -----			-	. REAR COVER ASSY INCLUDES:		
-75	348-0441-00			4	. FOOT,CABINET:POLYURETHANE,BLACK	80009	348-0441-00
-76	161-0107-01			1	CABLE ASSY,PWR:3,18 AWG,115V,7.5' LONG,W/LUG	80009	161-0107-01
					(ATTACHING PARTS)		
-77	358-0323-00			1	BSHG,STRAIN RLF:90 DEG,0.515 DIA HOLE	28520	SR15-1
-78	211-0504-00			1	SCREW,MACHINE:6-32 X 0.25 INCH,PNH STL	83385	OBD
					- - - * - - -		
	----- -----			-	. POWER CORD INCLUDES:		
-79	210-0287-00			1	. TERMINAL,LUG:	00779	34142
-80	348-0063-00			1	GROMMET,PLASTIC:0.50 INCH DIA	80009	348-0063-00
-81	255-0334-00			FT	PLASTIC CHANNEL:12.75 INCHES LONG	11897	122-37-2500

Fig. & Index No.	Tektronix Part No.	Serial/Model No. Eff	Dscont	Qty	1 2 3 4 5 Name & Description	Mfr Code	Mfr Part Number
1-82	----- -----			3	TRANSISTOR:CHAS MTG(SEE Q736,Q756,Q776 EPL)		
					(ATTACHING PARTS FOR EACH)		
-83	344-0236-01			1	CLIP,SPR TNSN:TRANSISTOR MOUNTING,COPPER	80009	344-0236-01
					- - - * - - -		
	342-0202-00			3	INSULATOR,PLATE:TRANSISTOR	01295	10-21-023-106
-84	253-0202-00			FT	INSUL TAPE,ELEC:POLYMIDE,0.875,ID X 3.5" LONG	99742	221
-85	214-2265-00			1	HEAT SINK,XSTR:6.0" L X 0.72" H,AL	80009	214-2265-00
					(ATTACHING PARTS)		
-86	211-0507-00			2	SCREW,MACHINE:6-32 X 0.312 INCH,PNH STL	83385	OBD
-87	211-0008-00			2	SCREW,MACHINE:4-40 X 0.25 INCH,PNH STL	83385	OBD
-88	210-0586-00			2	NUT,PLAIN,EXT W:4-40 X 0.25 INCH,STL	78189	OBD
					- - - * - - -		
-89	352-0425-00			1	FUSEHOLDER:PLASTIC	80009	352-0425-00
	337-2302-00	XB010135		1	SHIELD,ELEC:LV POWER CARD	80009	337-2302-00
	337-2302-00	XB010155		1	SHIELD,ELEC:LV POWER CARD	80009	337-2302-00
-90	----- -----			1	CKT BOARD ASSY:L.V. POWER SUPPLY(SEE A2 EPL)		
					(ATTACHING PARTS)		
-91	212-0516-00			4	SCREW,MACHINE:10-32 X 2 INCH,HEX HD STL	77250	OBD
-92	166-0432-00			4	INSUL SLVG,ELEC:BOLT INSULATING	80009	166-0432-00
-93	361-0741-00			4	SPACER,SLEEVE:0.245" ID X 0.75" L,AL	80009	361-0741-00
-94	220-0572-00			2	NUT,PLAIN,HEX.:10-32 X 0.25 INCH,PL BRS	73743	OBD
					- - - * - - -		
	----- -----			-	. CKT BOARD ASSY INCLUDES:		
-95	131-1817-00			10	. LINK,TERM CONNE:22 AWG,2.25" LONG	80009	131-1817-00
-96	131-1750-00			1	. TERM.,FEED THRU:10 PIN INSULATED	27264	09-64-1103
-97	344-0154-00			2	. CLIP,ELECTRICAL:FOR 0.25 INCH DIA FUSE	80009	344-0154-00
-98	346-0032-00			1	. STRAP,RETAINING:	98159	2829-75-4
-99	----- -----			2	. SW,SLIDE:LINE VOLT/SELECT(SEE S701,S705 EPL)		
-100	----- -----			1	TRANSFORMER:POWER(SEE T700 EPL)		
-101	343-0213-00			2	CLAMP,LOOP:PRESS MT,PLASTIC	80009	343-0213-00
-102	366-1031-02			1	KNOB:RED-VAR	80009	366-1031-02
	213-0153-00			1	. SETSCREW:5-40 X 0.125 INCH,HEX SOC STL	74445	OBD
-103	366-1646-00			1	KNOB:GRAY,W/SHAFT	80009	366-1646-00
-104	366-1559-00			3	PUSH BUTTON:GRAY	80009	366-1559-00
-105	384-1371-02			2	EXTENSION SHAFT:6.8" LONG,W/KNOB	80009	384-1371-02
-106	366-1031-02			1	KNOB:RED-VAR	80009	366-1031-02
	213-0153-00			1	. SETSCREW:5-40 X 0.125 INCH,HEX SOC STL	74445	OBD
-107	366-1646-00			1	KNOB:GRAY,W/SHAFT	80009	366-1646-00
-108	426-1072-00			3	FRAME,PUSH BTN:PLASTIC	80009	426-1072-00
-109	358-0550-00			2	BUSHING,SHAFT:0.15 ID X 0.3INCH OD,PLSTC	80009	358-0550-00
-110	333-2040-00			1	PANEL,FRONT:VERTICAL	80009	333-2040-00
-111	384-1393-00			2	EXTENSION SHAFT:0.123 DIA X 6.3" L,PLSTC	80009	384-1393-00
-112	376-0051-00			2	CPLG,SHAFT,FLEX:FOR 0.125 INCH DIA SHAFTS	80009	376-0051-00
	----- -----			-	. EACH COUPLER INCLUDES:		
	213-0022-00			4	. SETSCREW:4-40 X 0.188 INCH,HEX SOC STL	74445	OBD
-113	351-0456-00			2	GUIDE,RES ADJ:PLASTIC	80009	351-0456-00
	672-0518-00	B010100	B010349	1	CKT BOARD ASSY:ATTEN,CH1 W/CAM SW	80009	672-0518-00
	672-0518-01	B010350		1	CKT BOARD ASSY:ATTEN,CH1 W/CAM SW	80009	672-0518-01
	672-0519-00	B010100	B010349	1	CKT BOARD ASSY:ATTEN,CH2 W/CAM SW	80009	672-0519-00
	672-0519-01	B010350		1	CKT BOARD ASSY:ATTEN,CH2 W/CAM SW	80009	672-0519-01
					(ATTACHING PARTS FOR EACH)		
-114	211-0144-00			2	SCREW,MACHINE:4-40 X 1.312 INCH,PNH STL	83385	OBD
-115	211-0018-00			1	SCREW,MACHINE:4-40 X 0.875 PNH,STL	83385	OBD
-116	210-0586-00			1	NUT,PLAIN,EXT W:4-40 X 0.25 INCH,STL	78189	OBD
					- - - * - - -		
	----- -----			-	. EACH ATTEN ASSY INCLUDES:		
-117	337-2214-00			1	. SHIELD,ELEC:ATTENUATOR LEFT,CH1	80009	337-2214-00
	337-2215-00			1	. SHIELD,ELEC:ATTENUATOR,RIGHT,CH2	80009	337-2215-00
					(ATTACHING PARTS)		
-118	211-0116-00[1]	B010100	B010439	1	. SCR,ASSEM WSHR:4-40 X 0.312 INCH,PNH BRS	83385	OBD
	211-0244-00[1]	B010440		1	. SCR,ASSEM WSHR:4-40 X 0.312 INCH,PNH STL	78189	OBD
	211-0116-00[2]	B010100	B010444	1	. SCR,ASSEM WSHR:4-40 X 0.312 INCH,PNH BRS	83385	OBD
	211-0244-00[2]	B010445		1	. SCR,ASSEM WSHR:4-40 X 0.312 INCH,PNH STL	78189	OBD
					- - - * - - -		

[1]T932 only
[2]T935 only

Fig. & Index No.	Tektronix Part No.	Serial/Model No. Eff	Dscont	Qty	1 2 3 4 5 Name & Description	Mfr Code	Mfr Part Number
1-119	131-0955-00			1	. CONNECTOR,RCPT,:BNC,FEMALE,W/HARDWARE	05091	31-279
					(ATTACHING PARTS)		
-120	210-1000-00			1	. WASHER,FLAT:0.384 ID X 0.50" OD,AL	80009	210-1000-00
					- - - * - - -		
-121	105-0678-00[1]	B010100	B010831	1	. DRUM,CAM SWITCH:W/LEVER	80009	105-0678-00
	105-0678-01[1]	B010832		1	. DRUM,CAM SWITCH:AC-DC GND,CHANNEL 1	80009	105-0678-01
	105-0678-02[1]	B010832		1	. ACTUATOR,CAM SW:AC-DC GND,CHANNEL 2	80009	105-0678-02
	105-0678-00[2]	B010100	B010961	1	. DRUM,CAM SWITCH:W/LEVER	80009	105-0678-00
	105-0678-01[2]	B010962		1	. DRUM,CAM SWITCH:AC-DC GND,CHANNEL 1	80009	105-0678-01
	105-0678-02[2]	B010962		1	. ACTUATOR,CAM SW:AC-DC GND,CHANNEL 2	80009	105-0678-02
-122	214-1126-01			4	. SPRING,FLAT:GREEN COLORED	80009	214-1126-01
-123	214-1752-00			4	. ROLLER,DETENT:	80009	214-1752-00
-124	401-0338-00			1	. BEARING,CAM SW:FRONT	80009	401-0338-00
					(ATTACHING PARTS)		
-125	211-0116-00[1]	B010100	B010439	2	. SCR,ASSEM WSHR:4-40 X 0.312 INCH,PNH BRS	83385	OBD
	211-0244-00[1]	B010440		2	. SCR,ASSEM WSHR:4-40 X 0.312 INCH,PNH STL	78189	OBD
	211-0116-00[2]	B010100	B010444	2	. SCR,ASSEM WSHR:4-40 X 0.312 INCH,PNH BRS	83385	OBD
	211-0244-00[2]	B010445		2	. SCR,ASSEM WSHR:4-40 X 0.312 INCH,PNH STL	78189	OBD
-126	210-0406-00			2	. NUT,PLAIN,HEX.:4-40 X 0.188 INCH,BRS	73743	2X12161-402
					- - - * - - -		
-127	376-0174-00			1	. CPLG,SHAFT,RGD:0.19 ID X 0.325 OD X 0.2" H	80009	376-0174-00
-128	105-0679-00			1	. DRUM,CAM SWITCH:	80009	105-0679-00
-129	343-0564-00			1	. RTNR BAR,CONT:ATTENUATOR,LEFT CH1	80009	343-0564-00
	343-0565-00			1	. RTNR BAR,CONT:ATTENUATOR,RIGHT CH2	80009	343-0565-00
					(ATTACHING PARTS)		
-130	211-0116-00[1]	B010100	B010439	1	. SCR,ASSEM WSHR:4-40 X 0.312 INCH,PNH BRS	83385	OBD
	211-0244-00[1]	B010440		1	. SCR,ASSEM WSHR:4-40 X 0.312 INCH,PNH STL	78189	OBD
	211-0116-00[2]	B010100	B010444	1	. SCR,ASSEM WSHR:4-40 X 0.312 INCH,PNH BRS	83385	OBD
	211-0244-00[2]	B010445		1	. SCR,ASSEM WSHR:4-40 X 0.312 INCH,PNH STL	78189	OBD
-131	211-0152-00[1]	B010100	B010439	1	. SCR,ASSEM WSHR:4-40 X 0.625 INCH,PNH BRS	83385	OBD
	211-0246-00[1]	B010440		1	. SCR,ASSEM WSHR:4-40 X 0.625 INCH,PNH,STL	78189	OBD
	211-0152-00[2]	B010100	B010444	1	. SCR,ASSEM WSHR:4-40 X 0.625 INCH,PNH BRS	83385	OBD
	211-0246-00[2]	B010445		1	. SCR,ASSEM WSHR:4-40 X 0.625 INCH,PNH,STL	78189	OBD
-132	210-0406-00			1	. NUT,PLAIN,HEX.:4-40 X 0.188 INCH,BRS	73743	2X12161-402
					- - - * - - -		
-133	131-1779-03			1	. CONT ASSY,ELEC:CAM SW,1 CONTACT,LEFT,CH1	80009	131-1779-03
	131-1779-04			1	. CONT ASSY,ELEC:CAM SW,1 CONTACT,RIGHT,CH2	80009	131-1779-04
-134	131-1779-01			1	. CONT ASSY,ELEC:CAM SW,13 CONTACT,LEFT,CH1	80009	131-1779-01
	131-1779-02			1	. CONT ASSY,ELEC:CAM SW,13 CONTACT,RIGHT,CH2	80009	131-1779-02
-135	----- -----			1	. CKT BOARD ASSY:CH1 OR CH2(SEE A6,17 EPL)		
-136	136-0263-04			5	. . SOCKET,PIN TERM:FOR 0.025 INCH SQUARE PIN	22526	75377-001
-137	361-0735-00			2	SPACER,CKT BD:0.25"OD X 0.093" H,PLSTC	80009	361-0735-00
-138	384-1136-00			3	EXTENSION SHAFT:0.95 INCH LONG	80009	384-1136-00
-139	----- -----			1	CKT BOARD ASSY:VERTICAL(SEE A8 EPL)		
					(ATTACHING PARTS)		
-140	211-0014-00			3	SCREW,MACHINE:4-40 X 0.50 INCH,PNH STL	83385	OBD
	211-0008-00			1	SCREW,MACHINE:4-40 X 0.25 INCH,PNH STL	83385	OBD
					- - - * - - -		
	----- -----			-	. CKT BOARD ASSY INCLUDES:		
-141	131-0589-00			10	. CONTACT,ELEC:0.46 INCH LONG	22526	47350
-142	131-1792-00			1	. CONTACT ASSY,EL:12 MALE CONTACT,FLAT WAFER	27264	09-70-2121
-143	----- -----			1	. SWITCH,PUSH:CH1,CH2(SEE S4320 EPL)		
-144	361-0542-00			4	. SPACER,SWITCH:PLASTIC	71590	J-64281
-145	----- -----			2	. RES.,VAR:CH1,CH2 VAR GAIN(SEE R4152,R4252 EPL)		
-146	----- -----			2	. RES.,VAR:CH1,CH2 POSITION(SEE R4346,R4356 EPL)		
-147	----- -----			1	DELAY LINE:W/HDWR(SEE DL4380 EPL)		
					(ATTACHING PARYS)		
-148	211-0007-00			2	SCREW,MACHINE:4-40 X 0.188 INCH,PNH STL	83385	OBD
-149	210-0586-00			2	NUT,PLAIN,EXT W:4-40 X 0.25 INCH,STL	78189	OBD
-150	210-0458-00			3	NUT,PLAIN,EXT W:8-32 X 0.344 INCH,STL	83385	OBD
					- - - * - - -		
	----- -----			-	. DELAY LINE INCLUDES:		
-151	131-1798-00			2	. CONTACT,ELEC:DELAY LINE	80009	131-1798-00

[1]T932
[2]T935

Fig. & Index No.	Tektronix Part No.	Serial/Model No. Eff	Dscont	Qty	1 2 3 4 5 Name & Description	Mfr Code	Mfr Part Number
1-152	346-0121-00			3	. STRAP,ELEC COMP:TIE DOWN,5.0 LONG	59730	T4-34M
-153	386-3292-00			1	SUBPANEL,FRONT:VERTICAL	80009	386-3292-00
-154	129-0577-00			1	SPACER,POST:0.188 HEX X 1.442"L,BRS	80009	129-0577-00
-155	334-2608-00			1	PLATE,IDENT:MARKED T932	80009	334-2608-00
	334-2537-00			1	PLATE,IDENT:MARKED T935	80009	334-2537-00
-156	124-0315-00			1	STRIP,TRIM:FRONT,PLASTIC	80009	124-0315-00
-157	366-1660-00			1	KNOB:GRAY	80009	366-1660-00
	213-0153-00			1	. SETSCREW:5-40 X 0.125 INCH,HEX SOC STL	74445	OBD
-158	131-0106-02			1	CONNECTOR,RCPT,:BNC	80009	131-0106-02
					(ATTACHING PARTS)		
-159	210-0255-00[1]			1	TERMINAL,LUG:0.391" ID INT TOOTH	80009	210-0255-00
	210-0255-00[2]	B010100	B010449	1	TERMINAL,LUG:0.391" ID INT TOOTH	80009	210-0255-00
	210-0207-00[2]	B010450		1	TERMINAL,LUG:0.375 INCH DIAMETER	12697	01136902
	210-0978-00[1]	XB010375		1	WASHER,FLAT:0.375 ID X 0.50 INCH OD,STL	78471	OBD
	210-0978-00[2]	XB010450		1	WASHER,FLAT:0.375 ID X 0.50 INCH OD,STL	78471	OBD
					- - - * - - -		
-160	366-1559-00			1	PUSH BUTTON:GRAY	80009	366-1559-00
-161	384-1371-00[2]			1	EXTENSION SHAFT:2.0" LONG,W/KNOB,PLASTIC	80009	384-1371-00
-162	366-1660-00			1	KNOB:GRAY	80009	366-1660-00
	213-0153-00			1	. SETSCREW:5-40 X 0.125 INCH,HEX SOC STL	74445	OBD
-163	366-1559-00[2]			3	PUSH BUTTON:GRAY	80009	366-1559-00
-164	366-1667-00[2]			1	KNOB:RED,0.127 INCH ID	80009	366-1667-00
	213-0153-00[2]			1	. SETSCREW:5-40 X 0.125 INCH,HEX SOC STL	74445	OBD
-165	366-1661-00[2]			1	KNOB:GRAY,TIM/DIV,0.127 INCH ID	80009	366-1661-00
	213-0153-00			2	. SETSCREW:5-40 X 0.125 INCH,HEX SOC STL	74445	OBD
-166	366-1662-00[2]			1	KNOB:CLEAR,FCTN TIMING,0.252 INCH ID	80009	366-1662-00
	213-0153-00			2	. SETSCREW:5-40 X 0.125 INCH,HEX SOC STL	74445	OBD
-167	366-1647-00[1]			1	KNOB:0.127" ID X 0.5" OD X 0.531"	80009	366-1647-00
	213-0153-00			1	. SETSCREW:5-40 X 0.125 INCH,HEX SOC STL	74445	OBD
-168	366-1281-01[1]			1	KNOB:GRAY,0.252 INCH ID	80009	366-1281-01
	213-0153-00			2	. SETSCREW:5-40 X 0.125 INCH,HEX SOC STL	74445	OBD
-169	358-0216-00			1	BUSHING,PLASTIC:0.257 ID X 0.412 INCH OD	80009	358-0216-00
-170	384-1371-02			1	EXTENSION SHAFT:6.8" LONG,W/KNOB	80009	384-1371-02
-171	358-0550-00			2	BUSHING,SHAFT:0.15 ID X 0.3INCH OD,PLSTC	80009	358-0550-00
-172	426-1072-00[2]			4	FRAME,PUSH BTN:PLASTIC	80009	426-1072-00
	426-1072-00[1]			1	FRAME,PUSH BTN:PLASTIC	80009	426-1072-00
-173	333-2093-00[2]			1	PANEL,FRONT:HORIZONTAL	80009	333-2093-00
	333-2092-00[1]			1	PANEL,FRONT:HORIZONTAL	80009	333-2092-00
-174	----- -----			1	RES.,VAR:HOLD-OFF,POSITION(SEE R2272 EPL)		
					(ATTACHING PARTS)		
-175	210-0583-00			1	NUT,PLAIN,HEX.:0.25-32 X 0.312 INCH,BRS	73743	2X20224-402
-176	210-0046-00			1	WASHER,LOCK:INTL,0.26 ID X 0.40" OD,STL	78189	1214-05-00-0541C
-177	210-0465-00			1	NUT,PLAIN,HEX.:0.25-32 X 0.375 INCH BRS	73743	3095-402
					- - - * - - -		
	672-0549-00			1	CKT BOARD ASSY:TRIGGER,W/LEVER SWITCH	80009	672-0549-00
	----- -----			-	. CKT BOARD ASSY INCLUDES:		
-178	----- -----			1	. LEVER,SWITCH:MODE(SEE S2150 EPL)		
-179	----- -----			1	. LEVER,SWITCH:SOURCE(SEE S2100 EPL)		
					(ATTACHING PARTS FOR EACH)		
-180	211-0152-00[1]	B010100	B010439	1	. SCR,ASSEM WSHR:4-40 X 0.625 INCH,PNH BRS	83385	OBD
	211-0540-00[1]	B010440		1	. SCREW,MACHINE:6-32 X 0.50 INCH,TRH STL	83385	OBD
	211-0152-00[2]	B010100	B010444	1	. SCR,ASSEM WSHR:4-40 X 0.625 INCH,PNH BRS	83385	OBD
	211-0540-00[2]	B010445		1	. SCREW,MACHINE:6-32 X 0.50 INCH,TRH STL	83385	OBD
-181	210-0551-00			1	. NUT,PLAIN,HEX.:4-40 X 0.25 INCH,STL	83385	OBD
-182	351-0448-01			2	. GUIDE ,SWITCH:W/SPRING AND ROLLER	80009	351-0448-01
					- - - * - - -		
-183	----- -----			1	. CKT BOARD ASSY:TRIGGER SWITCH(SEE A11 EPL)		
-184	----- -----[2]			1	RES.,VAR:DELAY TIME(SEE S2516 EPL)		
					(ATTACHING PARTS)		
-185	210-0583-00[2]			1	NUT,PLAIN,HEX.:0.25-32 X 0.312 INCH,BRS	73743	2X20224-402
-186	210-0046-00[2]			1	WASHER,LOCK:INTL,0.26 ID X 0.40" OD,STL	78189	1214-05-00-0541C
-187	210-0465-00[2]			1	NUT,PLAIN,HEX.:0.25-32 X 0.375 INCH BRS	73743	3095-402
					- - - * - - -		

[1] T932 only
[2] T935 only

Fig. & Index No.	Tektronix Part No.	Serial/Model No. Eff	Dscont	Qty	1 2 3 4 5 Name & Description	Mfr Code	Mfr Part Number
1-188	384-1410-00[1]			1	EXTENSION SHAFT:0.081 OD X 8.296" L,SST	80009	384-1410-00
	384-1422-00[2]			1	EXTENSION SHAFT:0.123 OD X 8.06" L,PLASTIC	80009	384-1422-00
-189	376-0051-00[2]			1	CPLG,SHAFT,FLEX:FOR 0.125 INCH DIA SHAFTS	80009	376-0051-00
	376-0050-00[1]			1	CPLG,SHAFT,FLEX:FOR 0.081/0.125 INCH SHAFTS	80009	376-0050-00
	213-0022-00			4	. SETSCREW:4-40 X 0.188 INCH,HEX SOC STL	74445	OBD
-190	672-0551-00[2]			1	CKT BOARD ASSY:A TIMING	80009	672-0551-00
	672-0533-00[1]			1	CKT BOARD ASSY:A AND B TIMING	80009	672-0533-00
-191	386-3293-00			1	SUBPANEL,FRONT:HORIZONTAL	80009	386-3293-00
					(ATTACHING PARTS)		
-192	211-0008-00			2	SCREW,MACHINE:4-40 X 0.25 INCH,PNH STL	83385	OBD
-193	211-0007-00			2	SCREW,MACHINE:4-40 X 0.188 INCH,PNH STL	83385	OBD
					- - - * - - -		
-194	384-1136-00			1	EXTENSION SHAFT:0.95 INCH LONG	80009	384-1136-00
-195	384-1408-00[1]			3	EXTENSION SHAFT:3.8 INCH LONG,PLASTIC	80009	384-1408-00
-196	----- -----			1	CKT BOARD ASSY:HORIZONTAL(SEE A12 EPL)		
					(ATTACHING PARTS)		
-197	129-0573-00			2	SPACER,POST:0.188" HEX 1.627" L,AL	80009	129-0573-00
					- - - * - - -		
	----- -----			-	. CKT BOARD ASSY INCLUDES:		
-198	131-0566-00[1]			7	. LINK,TERM.CONNE:0.086 DIA X 2.375 INCH L	55210	ERD-18T0
	131-0566-00[2]			1	. LINK,TERM.CONNE:0.086 DIA X 2.375 INCH L	55210	ERD-18T0
-199	131-0608-00[1]			7	. CONTACT,ELEC:0.365 INCH LONG	22526	47357
	131-0608-00[2]			4	. CONTACT,ELEC:0.365 INCH LONG	22526	47357
-200	131-1795-00			1	. CONNECTOR,RCPT,:12 FEMALE CONTACT,RT-ANGLE	27264	09-62-3121
-201	131-1801-00[1]			2	. CONNECTOR,RCPT,:9 CONTACTS	80009	131-1801-00
	131-1801-00[2]			1	. CONNECTOR,RCPT,:9 CONTACTS	80009	131-1801-00
-202	131-1802-00			2	. CONNECTOR,RCPT,:15 CONTACTS	80009	131-1802-00
-203	----- -----			1	. SWITCH,PUSH:SLOPE(SEE S2140 EPL)		
-204	361-0542-00			2	. SPACER,SWITCH:PLASTIC	71590	J-64281
-205	----- -----[1]			1	. SWITCH,PUSH:MODE(SEE S2510 EPL)		
-206	361-0542-00[1]			4	. SPACER,SWITCH:PLASTIC	71590	J-64281
-207	----- -----			1	. RES.,VAR:LEVEL(SEE R2138 EPL)		
-208	----- -----			1	. RES.,VAR:HORIZONTAL POSITION(SEE R2316 EPL)		
-209	----- -----			1	. RES.,VAR:SWEEP RATE(SEE R2322 EPL)		
-210	441-1278-00			1	CHASSIS,SCOPE:MAIN	80009	441-1278-00
-211	131-1538-00			4	CONTACT,ELEC:CRIMP-ON,22-26 AWG WIRE	22526	75369-002
-212	131-0707-00			4	CONTACT,ELEC:0.48"L,22-26 AWG WIRE	22526	75691-005
-213	352-0171-00			1	CONN BODY,PL,EL:1 WIRE BLACK	80009	352-0171-00
	198-3071-00			1	WIRE SET,ELEC:	80009	198-3071-00

[1]T935 only
[2]T932 only

Fig. & Index No.	Tektronix Part No.	Serial/Model No. Eff	Dscont	Qty	1 2 3 4 5	Name & Description	Mfr Code	Mfr Part Number
	070-1983-01			1		MANUAL:INSTRUCTION	80009	070-1983-01
	010-6108-03			2		PROBE,VOLTAGE:10X,2 METERS,W/ACCESSORIES	80009	010-6108-03

@

MANUAL CHANGE INFORMATION

At Tektronix, we continually strive to keep up with latest electronic developments by adding circuit and component improvements to our instruments as soon as they are developed and tested.

Sometimes, due to printing and shipping requirements, we can't get these changes immediately into printed manuals. Hence, your manual may contain new change information on following pages.

A single change may affect several sections. Since the change information sheets are carried in the manual until all changes are permanently entered, some duplication may occur. If no such change pages appear following this page, your manual is correct as printed.

SERVICE NOTE

Because of the universal parts procurement problem, some electrical parts in your instrument may be different from those described in the Replaceable Electrical Parts List. The parts used will in no way alter or compromise the performance or reliability of this instrument. They are installed when necessary to ensure prompt delivery to the customer. Order replacement parts from the Replaceable Electrical Parts List.

CALIBRATION TEST EQUIPMENT REPLACEMENT

Calibration Test Equipment Chart

This chart compares TM 500 product performance to that of older Tektronix equipment. Only those characteristics where significant specification differences occur, are listed. In some cases the new instrument may not be a total functional replacement. Additional support instrumentation may be needed or a change in calibration procedure may be necessary.

Comparison of Main Characteristics

DM 501 replaces 7D13		
PG 501 replaces 107	PG 501 - Risetime less than 3.5 ns into 50 Ω.	107 - Risetime less than 3.0 ns into 50 Ω.
108	PG 501 - 5 V output pulse; 3.5 ns Risetime.	108 - 10 V output pulse; 1 ns Risetime.
111	PG 501 - Risetime less than 3.5 ns; 8 ns Pretrigger pulse delay.	111 - Risetime 0.5 ns; 30 to 250 ns Pretrigger Pulse delay.
114	PG 501 - ±5 V output.	114 - ±10 V output. Short proof output.
115	PG 501 - Does not have Paired, Burst, Gated, or Delayed pulse mode; ±5 V dc Offset. Has ±5 V output.	115 - Paired, Burst, Gated, and Delayed pulse mode; ±10 V output. Short-proof output.
PG 502 replaces 107		
108	PG 502 - 5 V output	108 - 10 V output.
111	PG 502 - Risetime less than 1 ns; 10 ns Pretrigger pulse delay.	111 - Risetime 0.5 ns; 30 to 250 ns Pretrigger pulse delay.
114	PG 502 - ±5 V output	114 - ±10 V output. Short proof output.
115	PG 502 - Does not have Paired, Burst, Gated, Delayed & Undelayed pulse mode; Has ±5 V output.	115 - Paired, Burst, Gated, Delayed & Undelayed pulse mode; ±10 V output. Short-proof output.
2101	PG 502 - Does not have Paired or Delayed pulse. Has ±5 V output.	2101 - Paired and Delayed pulse; 10 V output.
PG 506 replaces 106	PG 506 - Positive-going trigger output signal at least 1 V; High Amplitude output, 60 V.	106 - Positive and Negative-going trigger output signal, 50 ns and 1 V; High Amplitude output, 100 V.
067-0502-01	PG 506 - Does not have chopped feature.	0502-01 - Comparator output can be alternately chopped to a reference voltage.
SG 503 replaces 190, 190A, 190B	SG 503 - Amplitude range 5 mV to 5.5 V p-p.	190B - Amplitude range 40 mV to 10 V p-p.
191	SG 503 - Frequency range 250 kHz to 250 MHz.	191 - Frequency range 350 kHz to 100 MHz.
067-0532-01	SG 503 - Frequency range 250 kHz to 250 MHz.	0532-01 - Frequency range 65 MHz to 500 MHz.
TG 501 replaces 180, 180A	TG 501 - Marker outputs, 5 sec to 1 ns. Sinewave available at 5, 2, and 1 ns. Trigger output - slaved to marker output from 5 sec through 100 ns. One time-mark can be generated at a time.	180A - Marker outputs, 5 sec to 1 μs. Sinewave available at 20, 10, and 2 ns. Trigger pulses 1, 10, 100 Hz; 1, 10, and 100 kHz. Multiple time-marks can be generated simultaneously.
181	TG 501 - Marker outputs, 5 sec to 1 ns. Sinewave available at 5, 2, and 1 ns.	181 - Marker outputs, 1, 10, 100, 1000, and 10,000 μs, plus 10 ns sinewave.
184	TG 501 - Marker outputs, 5 sec to 1 ns. Sinewave available at 5, 2, and 1 ns. Trigger output - slaved to marker output from 5 sec through 100 ns. One time-mark can be generated at a time.	184 - Marker outputs, 5 sec to 2 ns. Sinewave available at 50, 20, 10, 5, and 2 ns. Separate trigger pulses of 1 and .1 sec; 10, 1, and .1 ms; 10 and 1 μs. Marker amplifier provides positive or negative time marks of 25 V min. Marker intervals of 1 and .1 sec; 10, 1, and .1 ms; 10 and 1 μs.
2901	TG 501 - Marker outputs, 5 sec to 1 ns. Sinewave available at 5, 2, and 1 ns. Trigger output - slaved to marker output from 5 sec through 100 ns. One time-mark can be generated at a time.	2901 - Marker outputs, 5 sec to 0.1 μs. Sinewave available to 50, 10, and 5 ns. Separate trigger pulses, from 5 sec to 0.1 μs. Multiple time-marks can be generated simultaneously.

NOTE: All TM 500 generator outputs are short-proof. All TM 500 plug-in instruments require TM 500-Series Power Module.

TEKTRONIX®
committed to technical excellence

MANUAL CHANGE INFORMATION

PRODUCT T932/T935
070-1983-01

CHANGE REFERENCE M31736
DATE 9-21-77

CHANGE:	DESCRIPTION

EFF SN: T932 B011997

T935 B012743

ELECTRICAL PARTS LIST AND SCHEMATIC CHANGES

CHANGE TO:

A6[1]	670-3972-05	CKT BOARD ASSY:CH 1 ATTENUATOR
A6[2]	670-3972-05	CKT BOARD ASSY:CH 1 ATTENUATOR
A7[1]	670-3973-05	CKT BOARD ASSY:CH 2 ATTENUATOR
A7[2]	670-3973-05	CKT BOARD ASSY:CH 2 ATTENUATOR

ADD:

R4103	317-0150-00	RES.,FXD,CMPSN:15 OHM,5%,0.125W
R4203	317-0150-00	RES.,FXD,CMPSN:15 OHM,5%,0.125W

R4103 is added to the A6 CH 1 ATTENUATOR board in series between J4110 CH 1 INPUT connector and the junction of C4101-C4102-S4100.

R4203 is added to the A7 CH 2 ATTENUATOR board in series between J4210 CH 2 INPUT connector and the junction of C4201-C4202-S4200. Affected parts are shown on VERT INPUT diagram 3.

TEKTRONIX®
committed to technical excellence

MANUAL CHANGE INFORMATION

PRODUCT T932/T935	CHANGE REFERENCE M30436
070-1983-01	DATE 9-21-77

CHANGE:	DESCRIPTION

EFF SN B011974 (T932)

EFF SN B012615 (T935)

ELECTRICAL PARTS LIST AND SCHEMATIC CHANGES

CHANGE TO:

C465	283-0404-00	CAP.,FXD,CER DI:0.01UF,20%,4000V
C466	283-0404-00	CAP.,FXD,CER DI:0.01UF,20%,4000V
R458	308-0218-00	RES.,FXD,CMPSN:150 OHM,5%,3W

The above parts are located on the INTERFACE circuit board and shown on diagram 1 CRT & VERT AMPL.

TEKTRONIX®
committed to technical excellence

MANUAL CHANGE INFORMATION

PRODUCT ALL T900 SERIES
EFF ALL SN

CHANGE REFERENCE M32883
DATE 12-21-77

CHANGE:	DESCRIPTION

Affects Manuals: 070-1981-01
070-1982-01
070-1983-01
070-2492-00

Oscilloscope Light Filter and Graticule Illumination Photography Effects

Some oscilloscopes contain a factory installed colored (usually blue or green) plastic light filter in front of the crt faceplate to improve general purpose viewing contrast in ambient lighting conditions (in some applications this device also functions as an implosion safety shield).

In order for the oscilloscope graticule to be photographed along with a crt display, oscilloscopes that do not provide internal graticule (scale) illumination must be used with a camera such as the C5A or C5A Option 3, which provide external flash illumination of the graticule. An exception to this is some storage oscilloscopes operated in the store mode, where the target illumination may also illuminate the graticule lines.

Effectiveness of the graticule illumination flash is severly degraded when used with most colored crt light filters. If a clear light filter was provided as an accessory with your oscilloscope, the colored filter should be removed and the clear filter installed in its place when taking oscilloscope display photographs. The clear filter may also provide improved photograph definition and contrast with reduced oscilloscope display intensity settings (some colored filters reduce effective display intensity as much as 75%). Under no circumstances should the oscilloscope be operated without either a clear or colored light filter when no other implosion shield is provided (optional accessory mesh filters are not intended for implosion protection and must be removed when using an oscilloscope camera).

If your oscilloscope was not provided with a clear light filter accessory, contact your local Tektronix Field Office for ordering information.

For all T900-series, bench-version oscilloscopes, the instrument cabinet must be removed in order to replace the crt light filter. Only qualified service personnel should remove the instrument cabinet. Cabinet removal instructions are provided in the Service portion of T900-series manuals. The part number for the clear light filter to fit T900-series, bench-version oscilloscopes is 337-2185-03.