TECHNICAL DATA

TEKTRONIX T321P___

REVISION A REVISED 9/19/60

The Tektronix Type T321P___ is a 3-inch flat-faced cathode ray tube with electrostatic focus and deflection. It features a low power cathode, deflection blanking and a helical post accelerator. It was designed for use in the Tektronix Type 321 transistorized oscilloscope.

MECHANICAL SPECIFICATIONS:

Overall Length	13 5/8 ±1/8 inches
Greatest Diameter of Bulb	3 1/16 inches
Bulb Contact	J1—21
Neck Pin Diameter	0.040 ±.002 inches
Base	JETEC NO. B12-43 (Modified)
Bulb and Base Alignment	See Outline Drawing
Weight (Typical)	18 ounces

ELECTRICAL DATA:

Heater Voltage	6.3 Volts RMS
Heater Current	0.3 ±10% Amperes RMS
Helix Resistance Range	200 to 600 Megohms
Capacitance, Interelectrode (Typical Values):	
Grid No. 1 to all other electrodes	5.1$\mu\mu$f
Cathode to all other electrodes	4.1$\mu\mu$f
DJ_1 to DJ_2	2.6$\mu\mu$f
DJ_1 to all other electrodes except DJ_2	2.7$\mu\mu$f
DJ_2 to all other electrodes except DJ_1	2.8$\mu\mu$f
DJ_3 to DJ_4	0.9$\mu\mu$f
DJ_3 to all other electrodes except DJ_4	2.5$\mu\mu$f
DJ_4 to all other electrodes except DJ_3	2.5$\mu\mu$f
BJ_1 to all other electrodes	7.4$\mu\mu$f

Deflection Polarity:

Positive Voltage on DJ_1 deflects beam toward Pin No. 10

Positive Voltage on DJ_3 deflects beam toward Pin No. 1

Geometry: (Measured under typical operating conditions)

Minimum useful scan DJ_1-DJ_2	6 Div. (0.25"/Div)
Minimum useful scan DJ_3-DJ_4	10 Div. (0.25"/Div)
Minimum quality screen area	2 3/4 inch circle
Trace Orthogonality	90° ±1°
Centering of undeflected spot with respect to geometric center (Deflection Electrodes connected to Grid No. 5)	0.125 inch Max.
Raster Distortion	1% Max.

MAXIMUM RATINGS: (All measurements taken with respect to the cathode)

Post Accelerator Voltage	5000 Max. Volts
Accelerator and Deflection System (1st anode, blanking plates, 2nd anode, deflection plates, deflection plate shields, isolation shield, lower helix)	850 Max. Volts
Focus Electrode	
Voltage Range	0 to 850 Volts
Maximum Current to Focus Electrode	$\pm 5\mu a$
Peak Voltage Between Electrodes	
Plate to Plate	500 Max. Volts
Plate to all other electrodes in the accelerator and deflection system	500 Max. Volts
Between any two electrodes in the accelerator and deflection system	500 Max. Volts
Grid No. 1 Voltage	
Negative Bias Value	75 Max. Volts
Positive Bias Value	0 Max. Volts
Positive Peak Value	2 Max. Volts
Peak Heater-Cathode Voltage	
Heater Negative with respect to Cathode	125 Max. Volts
Heater Positive with respect to Cathode	125 Max. Volts
Maximum Electrode Power Dissipation	
1st Anode & Blanking Plates	1 Watt

TYPICAL OPERATING CONDITIONS: (All measurements taken with respect to the cathode)

Electrode Designation	Symbol	
Post Accelerator Voltage	Epa	4000 Volts DC
Lower Helix Voltage	Elh	625 to 715 Volts DC
Isolation Shield Voltage (Note 1)	Eg6	625 to 715 Volts DC
Average of Deflection Plates		660 Volts DC
D_3-D_4 Deflection Shield Voltage	Es1	660 Volts DC
Accelerator Voltage		
Grid No. 5 (Astigmatism)	Eg5	625 to 715 Volts DC
Grid No. 2 & 3, (1st Anode) and	Eg2, 3	680 Volts DC
Blanking Plate	BJ1	680 Volts DC
Grid No. 4 Voltage (Focus)	Eg4	0 to 270 Volts DC
Grid No. 1 Voltage (Control)	Eg1	—15 to —25 Volts (cutoff)

Deflection Factors (Nominal)

DJ_1-DJ_2	8.6 Volts/0.25" Div.
DJ_3-DJ_4	5.7 Volts/0.25" Div.

Useful Scan

DJ_1-DJ_2	6 Div. (0.25"/Div)
DJ_3-DJ_4	10 Div. (0.25"/Div)

Deflection Blanking Voltage (BJ_1 to BJ_2)

(For visual cut-off at Eg1=0 Volts)	±25 Volts

DESIGN RANGES:

Minimum Scan (PDA Ratio 6)

DJ_1-DJ_2	6 Div. (0.25"/Div)
DJ_3-DJ_4	10 Div. (0.25"/Div)

Deflection Factors (PDA Ratio 6)

DJ_1-DJ_2	12.1 to 13.9V/0.25" div/KV Vgun
DJ_3-DJ_4	7.9 to 9.4V/0.25"div/KV Vgun
Grid No. 1 Voltage for extinction of undeflected focused spot	4% of Vgun
Focus Electrode Voltage (recommended range)	0% to 40% of Vgun
Deflection Blanking Voltage (BJ_1 to BJ_2) (Eg1=0 Volts)	2.5% of Vgun

NOTES:

1. Lower helix and isolation shield are connected internally. Pattern distortion is minimal with the proper potential.

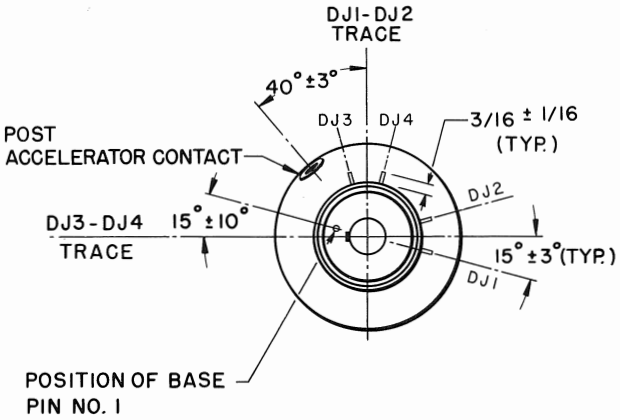

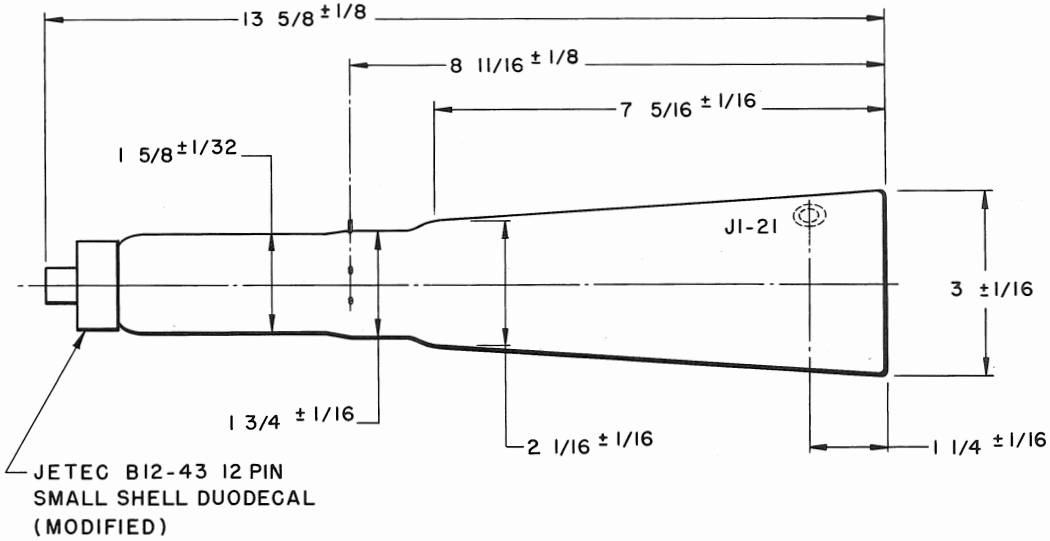

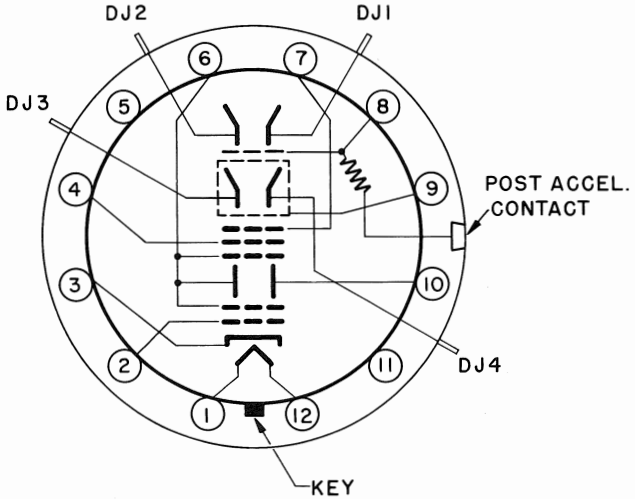

BASE SCHEMATIC

BASE CONNECTIONS

1, 12	HEATER
2	GRID NO. 1 (CONTROL)
3	CATHODE
4	GRID NO. 4 (FOCUS)
5, 11	N. C.
6	GRID NO. 2 & 3 (1ST. ANODE) BJ1 (BLANKING PLATE RETURN)
7	GRID NO. 5 (ASTIGMATISM)
8	ISOLATION SHIELD
9	DJ3-DJ4 SHIELD
10	BJ2 (BLANKING PLATE)

MARK	DATE	DESCRIPTION	BY	APPR
		CATHODE-RAY TUBE DIVISION TEKTRONIX, INC. PORTLAND, OREGON, U.S.A.		
		TUBE TYPE: T 321	DATE: 5-5-60 MOD.	