D67 OR

DEVELOPMENT SAMPLE DATA

QUICK REFERENCE DATA

12 × 10cm flat-faced oscilloscope tubes with mesh and metal backed screen. The tubes have side connections to x and y plates. 95447 has a GH phosphor. 95447GM has a GM phosphor.

Final anode voltage	10	kV
Display area ($V_{a4} = 6.7V_{a1,a3}$)	80 × 100	mm
Deflection factor y	4.2 4·1	V/cm
Deflection factor x	15.5 15·35	V/cm

This data should be read in conjunction with
GENERAL OPERATIONAL RECOMMENDATIONS – CATHODE RAY TUBES

HEATER

V_h	6.3	V
I_h	300	mA

OPERATING CONDITIONS

Beam forming		RANGE		SETTING	
Final anode + luminescent screen	V_{a4}		10	10·45	kV
Geometry control electrode (see note 1)	V_{s3}	−50 +65	1500 ± 100	1479	V
Interplate shield (see note 1)	V_{s2}	—	1500 ± 15	1497	V
Deflection plate shield (see note 2)	V_{s1}	—	1500	1504	V
Focus electrode (approx.)	V_{a2}	760 − 210	500	450	V
First accelerator and astigmatism control electrode (see note 3)	$V_{a1,a3}$	−50 +65	1500 ± 50	1507	V
Control grid (for visual cut-off)	V_g	2·9 − 50	−60	29	V
Average grid drive ($I_t = 10\mu A$)	ΔV_g		22		V

Line width

V_{a4}	10	kV
V_{s2}	1.5	kV
V_{s1}	1.5	kV
$V_{a1,a3}$	1.5	kV
I_t	10	μA
*Line width (approx.)	0.3	mm

*Measured by the shrinking raster method in the centre of screen.

Raster distortion

A graticule consisting of concentric rectangles 95 × 75mm and 92.8 × 73.6mm is aligned with the electrical x-axis of the tube. The edges of the raster will fall between these rectangles, with optimum correction potentials applied.

DEFLECTION

Double electrostatic

Mean y-plate voltage (see note 2)	$V_{y(mean)}$	1.5	kV
Mean x-plate voltage (see note 2)	$V_{x(mean)}$	1.5	kV
Vertical deflection factor	S_y	4.2	V/cm
Horizontal deflection factor	S_x	15.5	V/cm
Angle between x and y traces		90 ± 1	deg
Angle between x trace and horizontal axis of tube face (max.)		5	deg

Both x and y plates are intended for symmetrical deflection. If use is made of the full deflection capabilities of the tube the deflection plates will intercept part of the electron beam near the edge of the scan. Therefore a low impedance deflection plate drive is necessary.

Linearity of deflection

The sensitivity at a deflection of less than 75% of the useful scan will not differ from the sensitivity at a deflection of 25% of the useful scan by more than 2%.

CORRECTION POTENTIAL RANGES

Astigmatism control range (see note 3)	$\Delta V_{a1,a3}$	±50	V
Geometry control range (see note 1)	ΔV_{s3}	±100	V
Interplate shield control range (see note 1)	ΔV_{s2}	±15	V

SCREEN

Tube face diagonal		14	cm
Phosphor	GH	GM	
Fluorescent colour	green	purplish-blue	
Phosphorescent colour	green	yellowish-green	
Persistence	medium short	long	
Minimum useful screen dimensions		80 × 100	mm
Minimum useful scan (at $V_{a4} = 6.7V_{a1,a3}$)			
$y_1 - y_2$		80	mm
$x_1 - x_2$		100	mm

V_{a4} max. (p.d.a.)	11	kV
V_{a4} min.	9	kV
V_{s3} max.	2.2	kV
V_{s2} max.	2.2	kV
V_{s1} max.	2.2	kV
V_{a2} max.	2.2	kV
$V_{a1,a3}$ max.	2.2	kV
$V_{a1,a3}$ min.	1.35	kV
$-V_g$ max.	200	V
$+V_g$ max.	0	V
Grid drive (d.c. or average) max.	30	V
V_{h-k} max.	±125	V
$v_{x-(a1,a3)pk}$ max.	500	V
$v_{y-(a1,a3)pk}$ max.	500	V
p_t max.	3	mW/cm^2
Ratio $V_{a4}/V_{a1,a3}$ max.	6.7	

CAPACITANCES (measured on three terminal capacitance bridge)

High potential	Low potential	Earthed	Capacitance (pF)
k	all	–	5.0
g	all	–	6.0
x_1	all	x_2	5.5
x_2	all	x_1	5.5
y_1	all	y_2	4.0
y_2	all	y_1	4.0
x_1	x_2	all	2.5
y_1	y_2	all	2.0

MOUNTING POSITION

Any. The tube socket should not be rigidly mounted but should have flexible leads and be allowed to move freely.

WEIGHT

Tube alone (approx.)	1.3	kg

ACCESSORIES

Socket (supplied with tube)	55566
a4 connector (cavity connector CT8)	55563
Mu-metal shield	55585

NOTES

1. The tube is designed for optimum performance when operating at a ratio $V_{a4}/V_{a1,a3} \leq 6.7$. The geometry control electrode voltage (V_{s3}) should be adjusted between -100V and +100V with respect to the mean x plate potential.
   A negative voltage on s_2, also with respect to the mean x plate potential, will cause some pin-cushion distortion with less background light, and a positive voltage will give some barrel distortion and a slight increase of background light. By varying V_{s2} and V_{s3} it is possible to find a compromise between background light and raster distortion.

2. The deflection plate shield voltage (V_{s1}) should be equal to the mean y-plate potential. The mean x- and y-plate potentials should be equal for optimum spot quality.

3. The astigmatism control should be adjusted within the stated range for optimum spot shape.

OUTLINE DRAWING OF 95447 and 95447GM

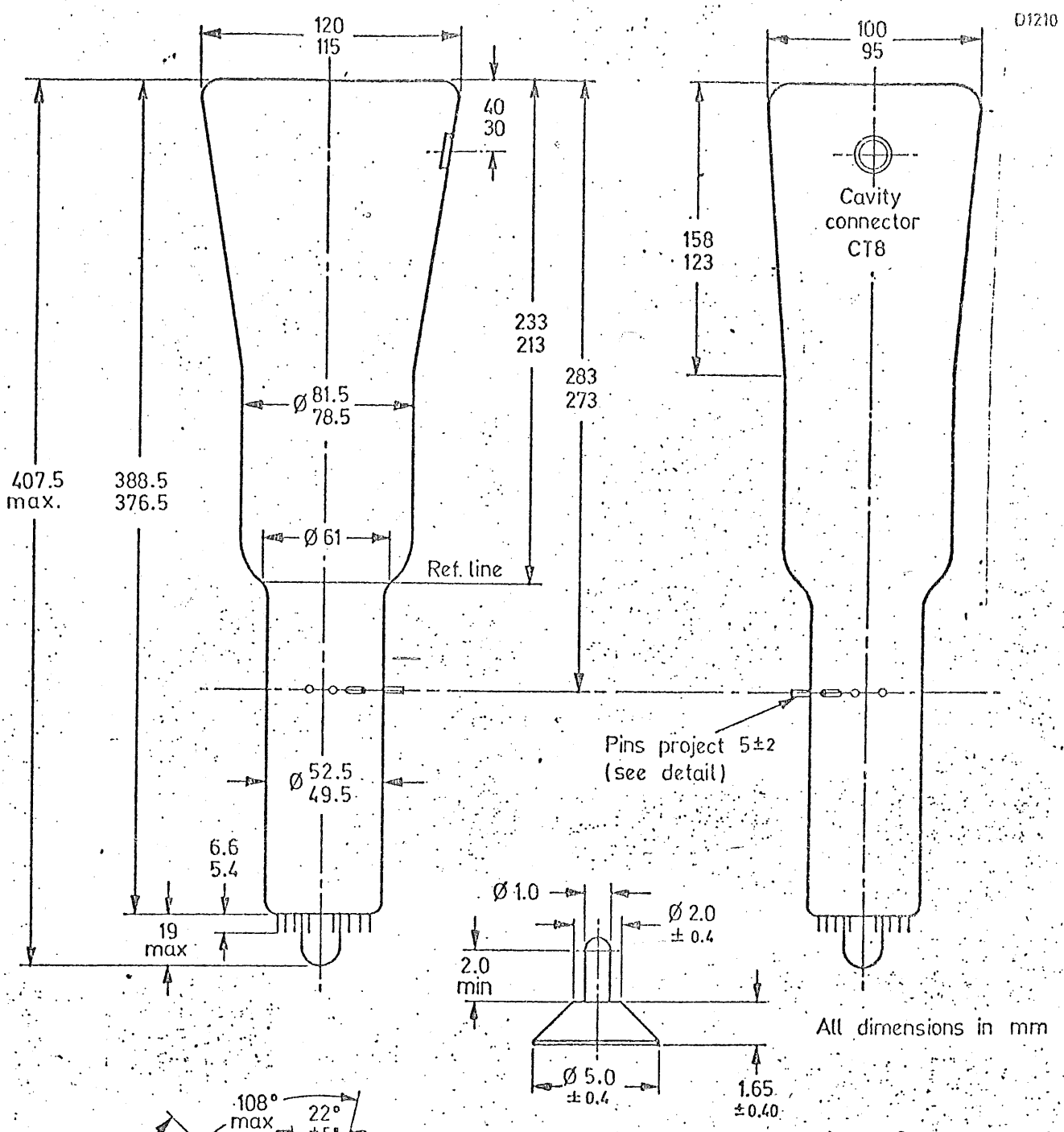

Detail of side contact

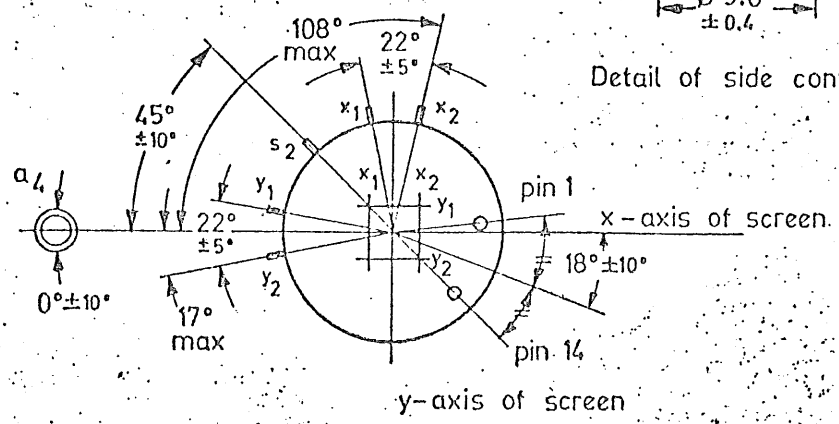

Orientation of axes of deflection
as viewed from screen end

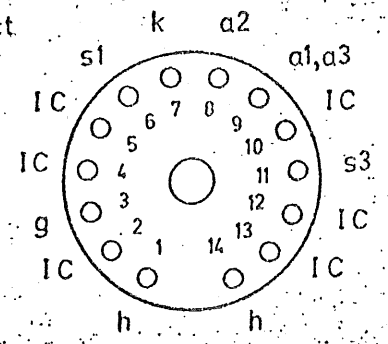

As viewed from base end
Special 14 pin base

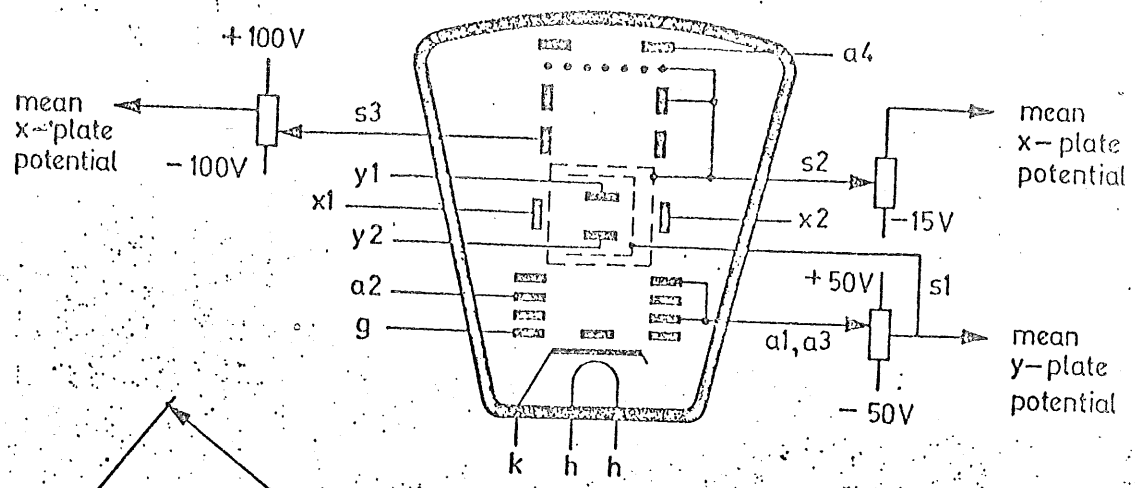

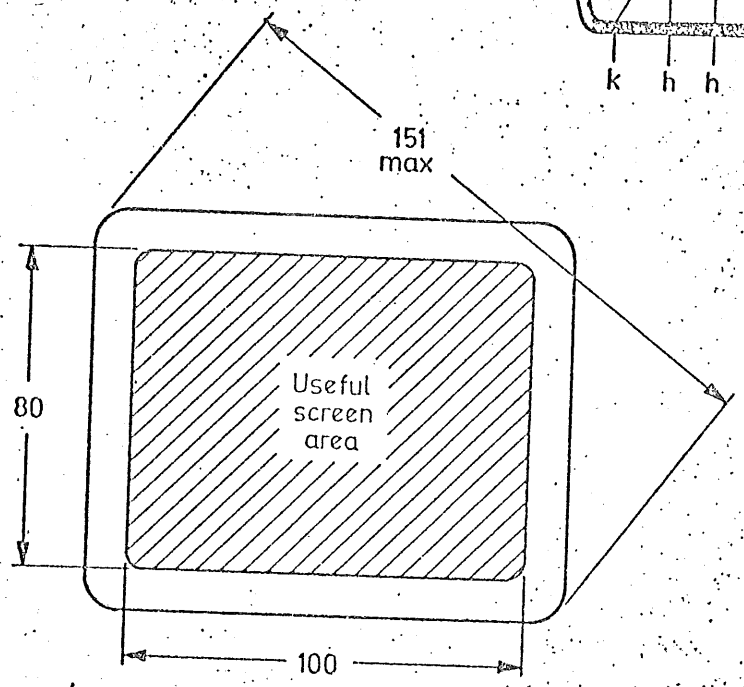

Tube face

D12