Includes corrections and changes with starting S/N as follows:

B020000	M19,949				
B030000	M20,017				
B040000	M19,283	M19,915			
B050000	M20,104	M19,994			
B060000	M19,883	M20,310	M19,855	M19,935	M20,205
B070000	M19,947				

ELECTRICAL PARTS LIST CORRECTIONS

(Changed portions are underlined, ADD's are all new)

ACTION	CKT NO.	PART NUMBER	S/N	DESCRIPTION
Chg	A4	670-2243-00	ALL	VERT MODE-GAIN SW. Ckt. Brd. Assy.
Chg	A9	670-2239-00	ALL	INTERFACE Ckt. Brd. Assy.
Chg	C420	281-0547-00	B060000	2.7 pF, Cer, 500 V
Chg	C494A	283-0198-00	B050000	0.22 μF, Cer, 50 V, 20%
Add	C494B	283-0341-00	B050000	0.047 μF (added when required)
Chg	C515	281-0605-00	B060000	200 pF, Cer, 500 V
Remove	C517	281-0579-00	B059999X	21 pF, Cer, 500 V, 5%
Remove	C708	281-0579-00	B059999X	21 pF, Cer, 500 V, 5%
Chg	C735	281-0605-00	B060000	200 pF, Cer, 500 V
Chg	C913	290-0523-00	B060000	2.2 μF, Elect., 20 V, 20%
Add	CR910	152-0141-02	B060000	Silicon, 1N4152
Remove	L552	276-0528-00	B059999X	Core, ferramic suppressor
Remove	L562	276-0528-00	B059999X	Core, ferramic suppressor
Add	L669	276-0507-00	B030000	Core, ferramic suppressor
Remove	L794	276-0507-00	B059999X	Core, ferramic suppressor
Chg	Q552	151-0434-00	B060000	Silicon, PNP, 2N4261
Chg	Q562	151-0434-00	B060000	Silicon, PNP, 2N4261
Chg	Q772	151-0434-00	B060000	Silicon, PNP, 2N4261
Chg	Q782	151-0434-00	B060000	Silicon, PNP, 2N4261

Chg R32, R34, R35, R36, R447, & R454 are selected parts, nominal installed value is listed.

ACTION	CKT NO.	PART NUMBER	S/N	DESCRIPTION
Chg	R494A	317-0621-00	B050000	620 Ω, 1/8 W, 5%
Add	R494B	311-0633-00	B050000	5 kΩ, Var, (added when required)
Add	R550	317-0560-00	B060000	56 Ω, 1/8 W, 5%
Add	R560	317-0560-00	B060000	56 Ω, 1/8 W, 5%
Add	R584	316-0220-00	B060000	22 Ω, 1/4 W, 10%
Add	R792	316-0220-00	B060000	22 Ω, 1/4 W, 10%
Chg	R806	315-0681-00	B060000	680 Ω, 1/4 W, 5%
Add	R824	316-0220-00	B060000	22 Ω, 1/4 W, 10%
Add	R910	321-0220-00	B060000	1.91 kΩ, 1/8 W, 1%
Chg	R911	321-0314-00	B060000	18.2 kΩ, 1/8 W, 1%
Chg	R912	321-0261-00	B060000	5.11 kΩ, 1/8 W, 1%
Chg	R952	321-0198-00	B060000	1.13 kΩ, 1/8 W, 1%
Add	R1103	315-0272-00	B060000	2.7 kΩ, 1/4 W, 5%
Chg	T1400	120-0799-01	B070000	LV Power

SCHEMATIC DIAGRAM and BOARD PHOTO CHANGES

Schematic ◇1◇

R125 was a variable resistor in early production. Second board outline down from top of page should be titled: PARTIAL A4 VERTICAL MODE-GAIN SWITCH BOARD.

Output at right of T178 should read:

CH 1 + VERT SIGNAL ◇3◇ to Pin 11 U370 ◇3◇.

Output at right of R189 should read:

CH 1 - VERT SIGNAL To Pin 10 U370 ◇3◇.

Refer to accompanying partial schematic for other changes.

Fig. 7-7 Title for board in photo and grid location chart should read: A4 Vertical Mode-Gain Switch Circuit Board.

Schematic Diagram and Board Photo Changes

Fig. 7-8 C213, R213 and C219 are moved to the back of the board in later production. R293, R294, R296 and R298 are located on back of board.

Schematic 2

R225 was a variable resistor in early production. Second board outline down from top of page should be titled: PARTIAL A4 VERTICAL MODE-GAIN SWITCH BOARD

Output at right of T278 should read:

CH 2 + VERT SIGNAL To Pin 3, U370 3.

The line between R293 and R295 should be connected.

Output at right of R289 should read:

CH 2 - VERT SIGNAL To Pin 2 U370 3.

Refer to accompanying partial schematics for other changes.

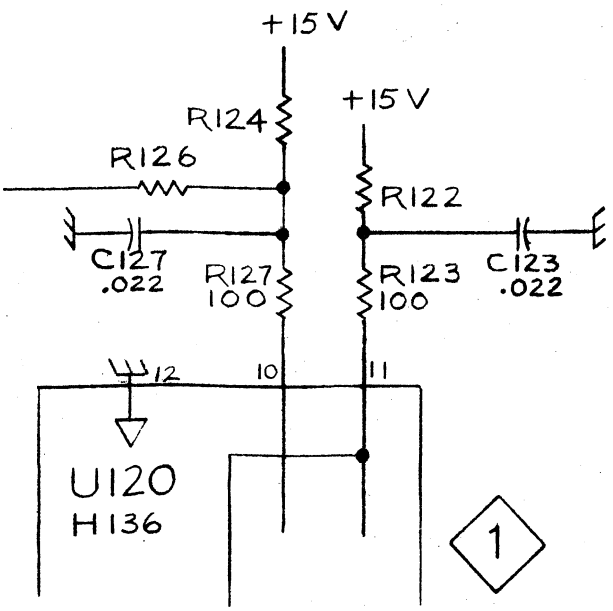

PARTIAL—
CH I VERTICAL PREAMP

SCHEMATIC CORRECTIONS

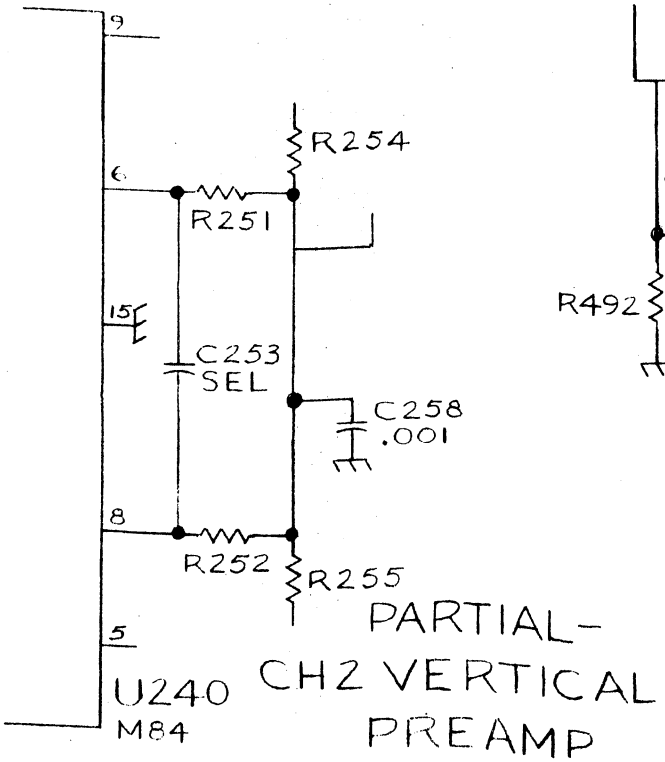

PARTIAL–
CH2 VERTICAL
PREAMP

2

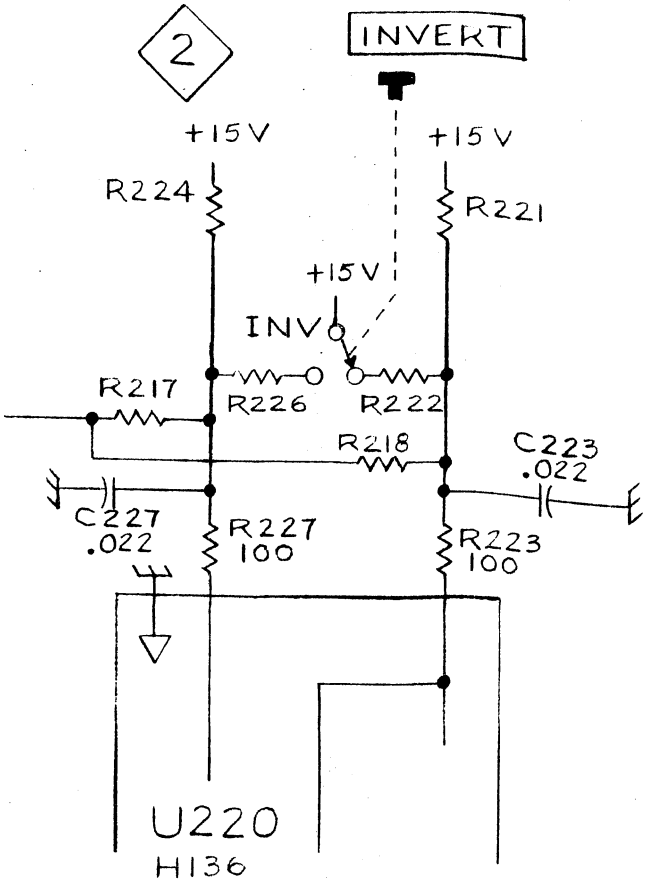

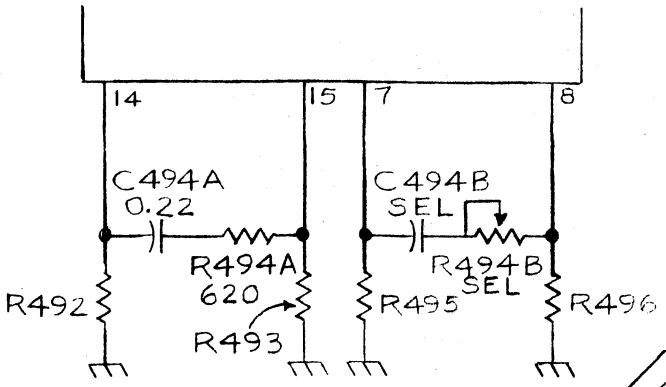

4

PARTIAL–
VERTICAL OUTPUT AMP.

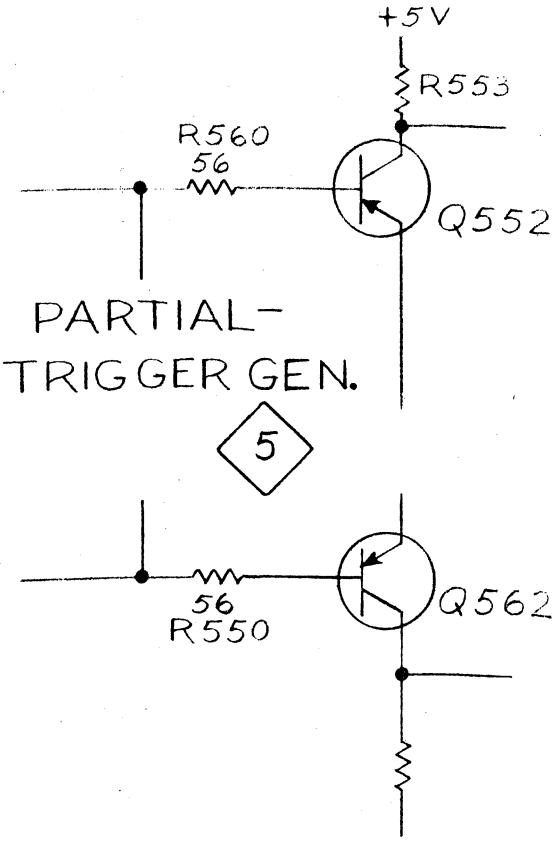

PARTIAL–
A TRIGGER GEN.

Schematic Diagram and Board Photo Changes

Fig. 7-9 Board title should read: A4 Vertical Mode-Gain Switch Circuit Board.

C329 is added to board above P300.

Schematic 3

Board title at left should read PARTIAL A4, VERT MODE-GAIN SW BOARD

P300 Pin 1 (Index) input should read: From CR1102 10

The input to R320 should read: CH 2 SCALE FACTOR From S53 1

The input to R310 should read CH 1 SCALE FACTOR From S13 1

U370 Pin 11 input should read: CH 1 + VERT SIG From Q178 2 1

J410 output should read: CH 2 TRIG SIG TO CR703

C420 value is changed to 2.7 pF

Fig. 7-11

C494A and C494B are added at the right of R492 and R493

Preexisting R494 and C494 are changed to R494B & C494B

Schematic 4

Change the details for S450A and U470 as indicated in the attached partial schematics.

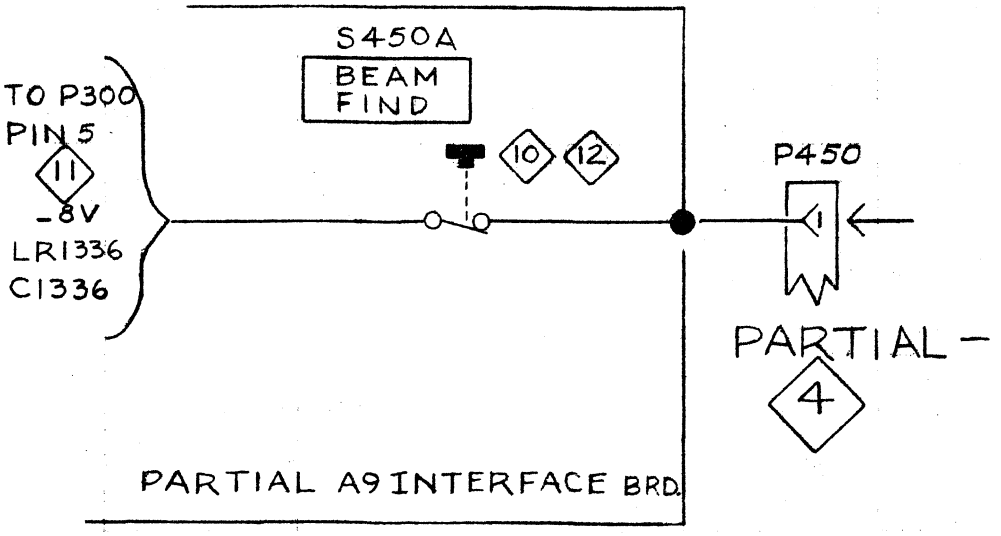

R447 nominal value is 3.01 K.

Schematic Diagram and Board Photo Changes

Fig. 7-12

L562 or R550 location is directly below Q562

L552 or R560 location is directly below Q552

Schematic 5

C517 is removed in later production.

See Electrical Parts List changes for C515, L669 & C669.

L552 is replaced with R560 (56 Ω)

L562 is replaced with R550 (56 Ω)

Output at right of R568 should read: "A' GATE TO BASE OF Q572 7

Schematic 6

C708 is removed in later production

C735 value is changed to 200 pF

Input to Base of Q712 should read:

CH 2 INT TRIG SIG FROM CR703.

R721, C721 and J720 are located outside of the A8 Board outline.

The output for the lead shown connected to the right contact of the left section of S705 should read: TO CR814 7

Fig. 7-14 These parts are located as follows for some S/N:

C644 below VR647	L826 below Q826
C572 left of Q572	C798 below CR824
C575 right of R574	C583 below L584
L600 right of R600	C584 left of L584
C811 below CR811	R580 in place of L584
L802 left of Q802	C823 right of Q824
L804 right of Q802	C824 above Q824
C813 right of R814	R824 below J824
R792 right of R797	R584 below J584
L588 left of Q588	

SCHEMATIC CORRECTIONS

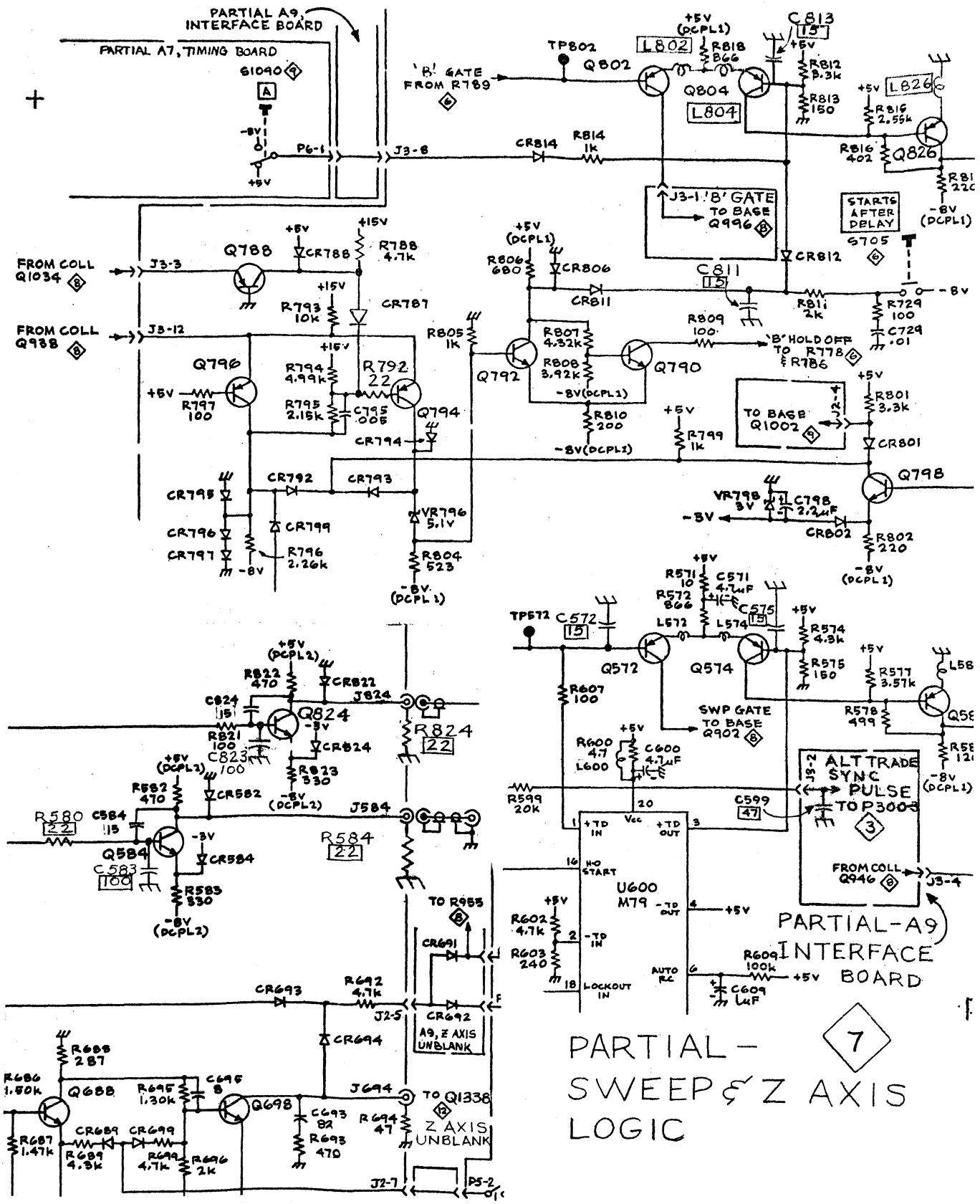

Schematic Diagram and Board Photo Changes

Schematic 7

Refer to attached partial 7 schematic.

Fig. 7-15

R910 is added at left of R986 for some S/N.

CR910 is added at right of CR1036 for some S/N.

R911 is moved to left of R917 for some S/N.

Schematic 8

Input to anode of CR910 should read to J3-8 7 & J6-1 9.

Voltage source for R911 should be +50 V.

Components at left of J5-10 are located on A7 Timing Board.

Input to J5-3 should read: FROM CR1075 9.

Schematic 9

Connectors P6-5 right to P4-1 should read: FROM 11

For S1050 row 7 and 8 detail, refer to attached partial schematic 9.

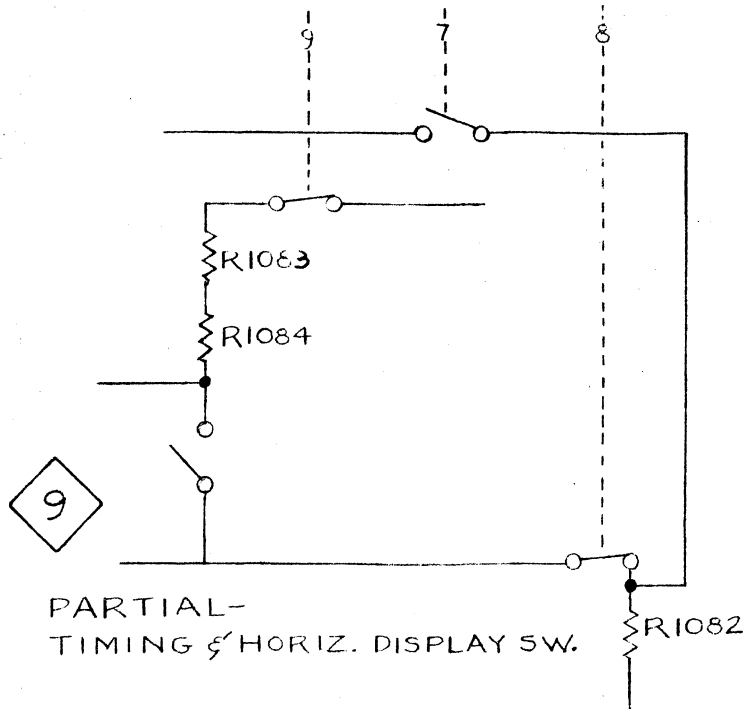

SCHEMATIC CORRECTIONS

P6-1 output should read:

To CR814 (7), R908, R922, CR910, & CR1036 (8).

P4-7 output should read to R683, R684 (7).

Fig. 7-17

R1103 is added below R1140 for some S/N.

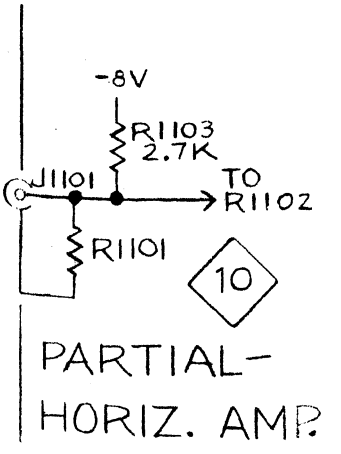

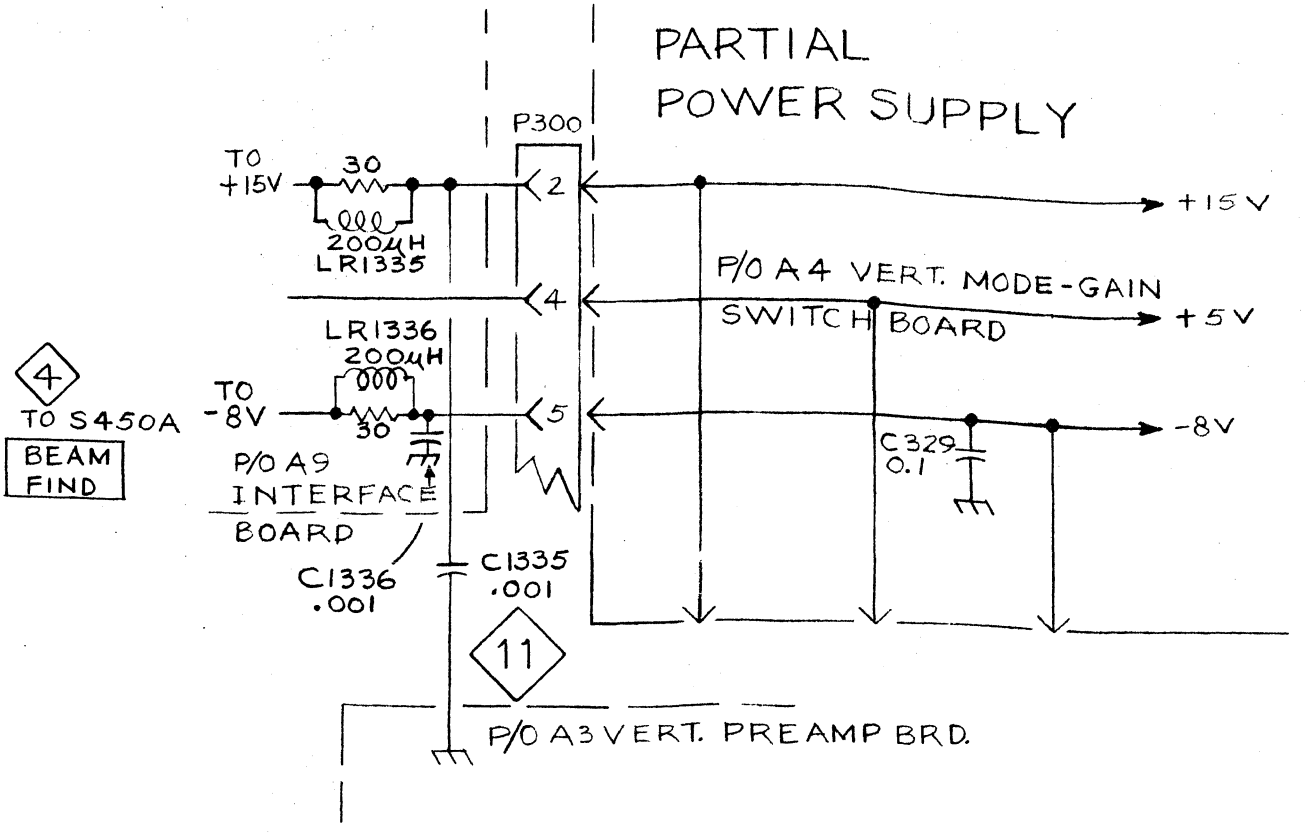

Schematic Diagram and Board Photo Changes

Schematic 10

Refer to attached partial schematic 10 for R1103 details.

Input to Q1114 collector, R1106, and S1110B X10 terminal should read:

SWEEP IN FROM Q956, Q1026 8.

Schematic 11

Refer to attached partial schematic 11 for changes near P300.

Change voltage for Q1482 collectors to +5V (UNREG.)

Fig. 7-19

R1352 is located above C1352 for some S/N.

C599 is located below R1335 for some S/N.

C1335, C1336, LR1335, LR1336 are located or connect above and left of R1396 for some S/N.

Schematic 12

Change R1335 INTENSITY control details per the attached partial 12 schematic.

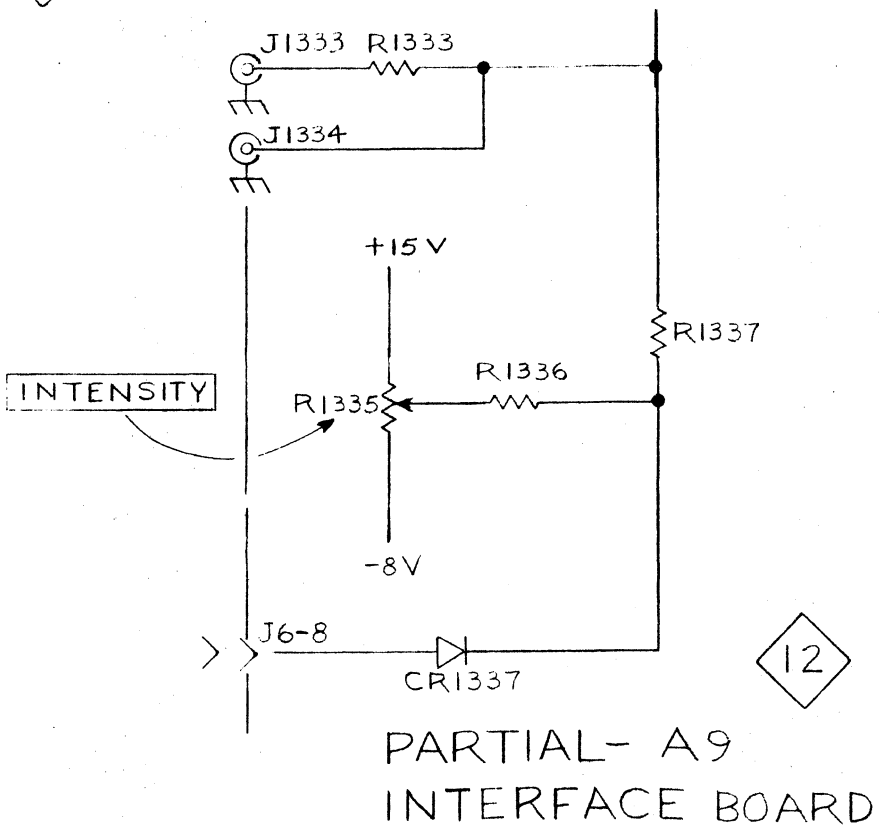

Calibration Procedure
Corrections for all Serial Numbers, and changes
for SN B030000 and up

Page 5-2 Table 5-1

CHANGE: Tolerance of item 3 (DC VOLTMETER) to read: "calibrated to 1% accuracy at -2450 Volts."
Description and Example of item 8 to read: "With charge line, example Tektronix Type 113 Delay Line."
Item 18; quantity of two are required.

Page 5-4 Preliminary Control Settings

CHANGE: Under "Triggering Controls (both A and B if applicable)" B SOURCE setting should read: STARTS AFTER DELAY

Page 5-7 Step 6a

ADD: pull 20 MHz (20 or 100 MHz for SN B100000-up) BW switch fully out and set A and B TIME/DIV switches to 10μs.

Page 5-8 Step 12a & 12b

ADD: at the end of 12a; push 20 MHz (20 or 100 MHz for later SN) BW switch fully in (FULL BW). Set VERT MODE switch to CH-1.
For step 12b, two X10 BNC attenuators in series may be required.

Page 5-14 Step 1a

CHANGE to read:

1a. CHECK-+50 V supply, ±0.5%. ADJUST R1430 ONLY if supply is outside of this tolerance. (see accompanying note to follow step 1c on page 5-25)

Page 5-15 Step 15

CHANGE to read:

15a. Both VOLTS/DIV to 2 mV,----------

Page 5-16 For Serial Numbers B030000 and up:

REPLACE: Existing steps 17 and 18 with the attached new text for Steps 23 and 24 on pages 5-32 and 5-33.

GENERAL For all SN, in steps such as 23d & 24j on page 5-17, 30d on page 5-35, & 31p on page 5-36, where a Fast-Rise High Amplitude Pulse Generator (type 109) is used, a charge line such as the Tektronix Type 113 Delay Line should be connected to the Chg Line 2 of the 109 to provide adequate pulse width to perform the adjustments.

Page 5-25 Following Step 1c

ADD:

NOTE

If +50 V supply is readjusted the entire calibration procedure will have to be performed.

Page 5-26 Step 3c and 3j

CHANGE to read:

3c. CHECK-CRT display for a well-defined dot.

3j. ---------controls to mid-range, and TRIGGER MODE to AUTO.

Page 5-27 Step 7a, Fig. 5-4, and Step 7d

CHANGE to read:

7a. Connect 1.0 ms and 0.1 ms time marks ----------

Fig. 5-4: See accompanying photo for correct TP1366 location.

7d. --------for one bright (1.0 ms) marker per division

Page 5-28 Step 9d

CHANGE to read:

9d. Adjust the Test Oscilloscope trigger and Time/Div controls to view the positive step of a 1 volt display of the Z axis signal. Adjust the 475 INTENSITY control to set the 1 Volt level.

Page 5-29 Fig. 5-6 and 5-7 replace with accompanying new photos.

Step 11d

CHANGE a portion to read --- between TP1395 (see new Fig. 5-6)----

Step 12a

CHANGE a portion to read --- of the delay line (see new Fig. 5-7)---

Page 5-30 Fig. 5-8 replace with accompanying new photo.

Page 5-31 Fig. 5-9 replace with accompanying new photo.

Page 5-32 Fig. 5-11 and 5-12 replace with accompanying new photos.

Step 22a add to existing text:
Set CH-2 AC-GND-DC Switch to AC.
For SN Below B030000 in steps 23i and 23j change 100 mV to read 250 mV.

Page 5-32 and 5-33

For SN B030000 and up, replace the existing steps 23 and 24 with the following steps. Refer to the accompanying revised Figures for correct location of adjustments.

Page 5-32

23. Adjust CH 1 and Vertical Output Gain (SN B030000-up)

a) Set the Vertical Mode Switch to CH 1, the CH 1 VOLTS/DIV switch to 2 mV and the CH 1 AC-GND-DC switch to DC.

b) Adjust the STANDARD AMPLITUDE CALIBRATOR for a 10 mV output.

c) Connect the STANDARD AMPL. CALIBRATOR to the CH 1 input.

d) d) Set the Test Oscilloscope: Vertical Mode to ADD, CH 2 to invert, both Volts/Div switches to 5 mV.

e) Connect two X10 probes from the Test Oscilloscope to the preamp side of the delay line.

f) Adjust CH 1 2 mV Gain Adjustment, R195 (see new Fig. 5-12) for a 250 mV (Peak-to-Peak) display on the Test Oscilloscope.

g) Remove the X10 probes from delay line.

h) Adjust Vertical Output Gain Adjustment, R449 (see Fig. 5-13) for 5 divisions of deflection.

i) Set the CH 1 VOLTS/DIV to 5 mV and adjust the STANDARD AMPL. CALIBRATOR for a 20 mV output.

j) Adjust-CH 1 5 mV Gain Adjustment, R165 (see new Fig. 5-12) for 4 divisions of deflection.

k) CHECK-Accuracy of the CH 1 Volts/Div switch using the settings given in Table 5-6. The deflection factor accuracy for each position must be within 3%.

24. Adjust CH 2 Gain (SN B030000-up)

a) Set the Vert Mode switch to CH 2, the CH 2 Volts/Div switch to 2 mV, and AC-GND-DC switch to DC.

b) Move the test signal to the CH 2 input.

c) Adjust the STANDARD AMPL. CALIBRATOR for 10 mV output.

d) Adjust-CH 2 2 mV Gain, R295 for 5 divisions of deflection.

e) Set the CH 2 Volts/Div switch to 5 mV and adjust the STANDARD AMPL. CALIBRATOR for 20 mV output.

f) Adjust-CH 2 5 mV Gain Adjustment, R265 (see new Fig. 5-14), for 4 divisions of deflection.

g) CHECK-Accuracy of the CH 2 Volts/Div switch using the settings given in Table 5-6. Deflection factor accuracy must be within 3% in all positions.

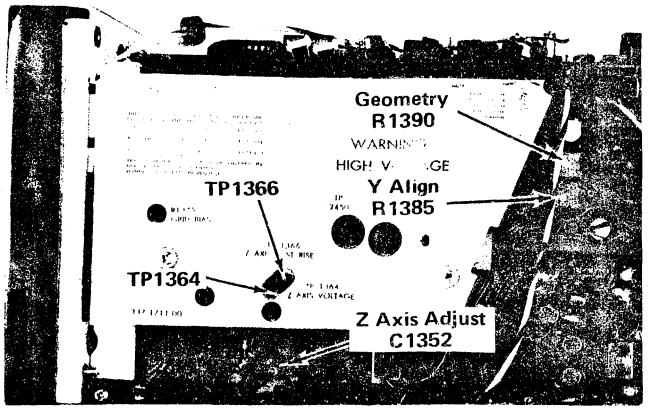

Fig. 5-4. Location of Y-Axis Align, Z-Axis, and Geometry adjustments and test point.

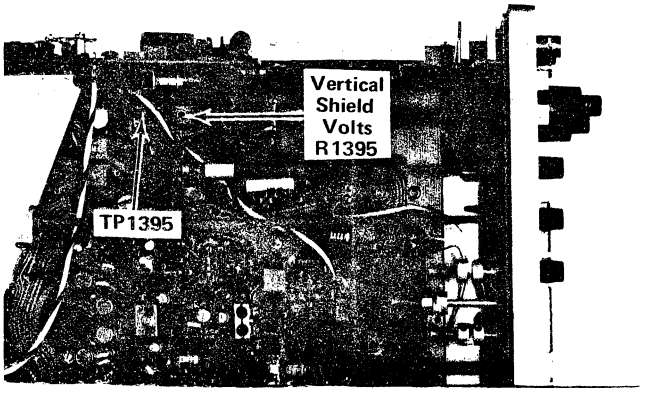

Fig. 5-6. Location of Vertical Shield Voltage adjustment and TP1395.

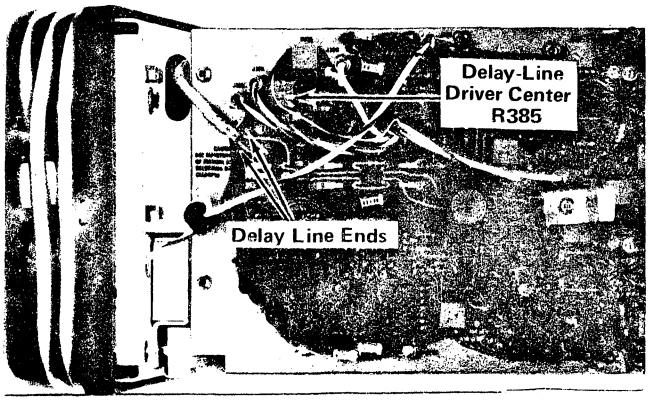

Fig. 5-7. Location of Delay-Line Driver Centering adjustment R385 and delay line ends.

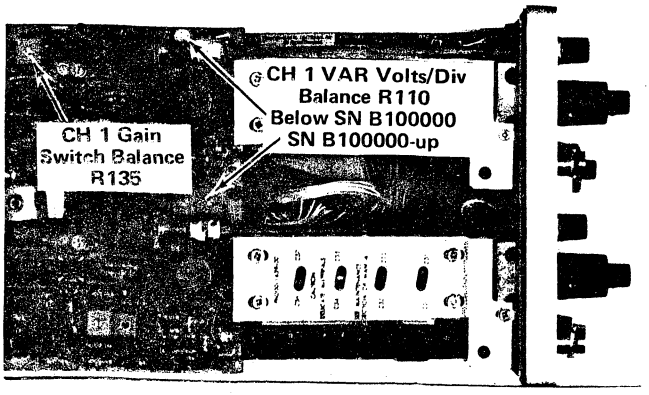

Fig. 5-8. Location of CH 1 Var Volts/Div Balance and Gain Switch Balance adjustments.

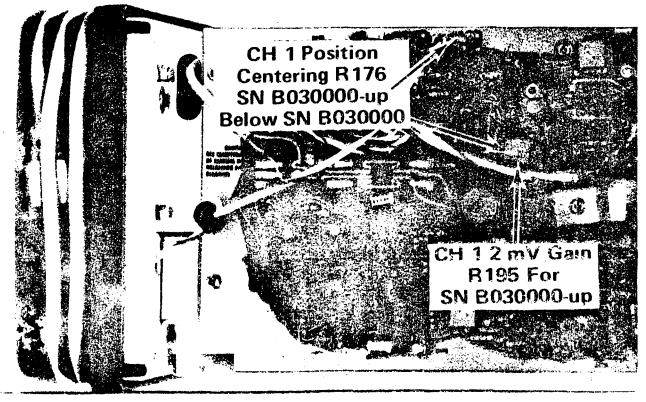

Fig. 5-9. Locations of CH 1 position centering adjustment R176 and CH 1 2 mV Gain R195 (SN B030000-up).

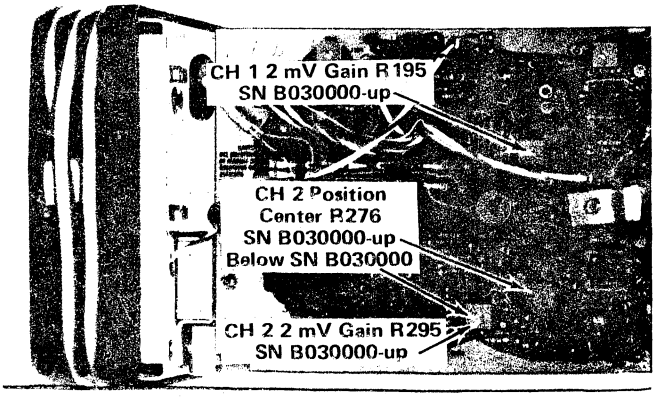

Fig. 5-11. Locations of CH 2 position center R276, CH 2 2 mV Gain R295, and CH 1 2 mV Gain R195 for SN B030000-up.

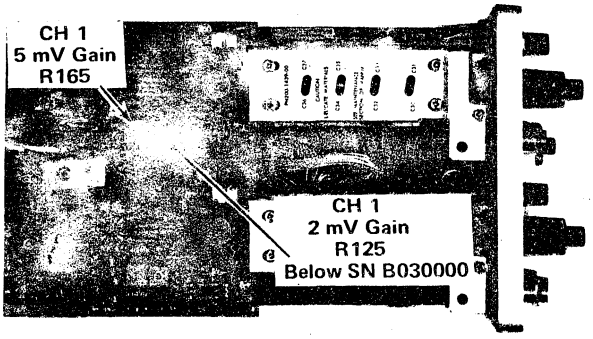

Fig. 5-12. Location of CH 1 5 mV Gain R165 (all SN) and CH 1 2 mV Gain R125 (Below SN B030000).

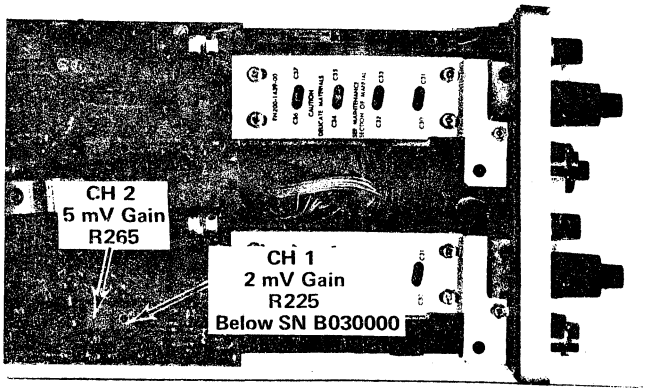

Fig. 5-14. Location of CH 2 5 mV Gain R265 (all SN) and CH 1 2 mV Gain R225 (Below SN B030000).

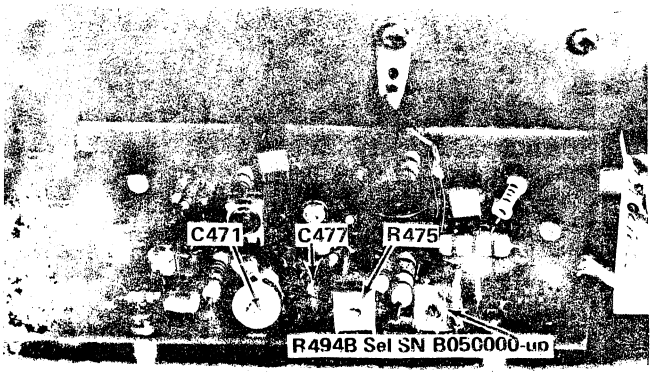

Fig. 5-18. Location of R475, C471, C477 and R494B (Selected SN B050000-up).

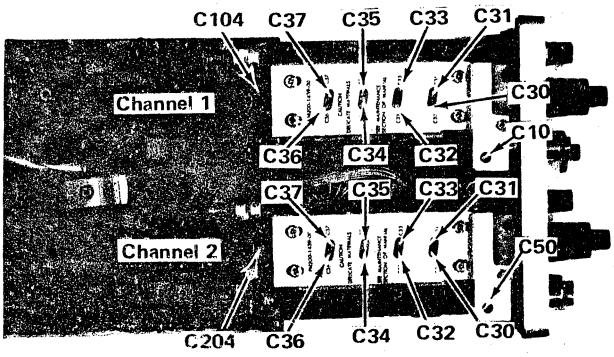

Fig. 5-19. Location of VOLTS/DIV Compensation adjustments.

ELECTRICAL PARTS LIST AND SCHEMATIC CORRECTION

CHANGE TO:

A3	670-2240-01	VERT PREAMP Circuit Board Assembly
C109	283-0191-00	0.022 μF, Cer, 50 V
C112	281-0122-00	2.5-9 pF, Var
C139	283-0238-00	0.01 μF, Cer, 50 V
C209	283-0191-00	0.022 μF, Cer, 50 V
C212	281-0122-00	2.5 -9 PF, Var
C239	283-0238-00	0.01 μF, Cer, 50 V
C398	281-0628-00	15 pF, Cer, 600 V
L171	276-0528-00	Core, ferramic suppressor, selected
L174	276-0528-00	Core, ferramic suppressor, selected
L271	276-0528-00	Core, ferramic suppressor, selected
L274	276-0528-00	Core, ferramic suppressor, selected
Q178	151-0434-00	Silicon, PNP, 2N4261
Q188	151-0434-00	Silicon, PNP, 2N4261
Q278	151-0434-00	Silicon, PNP, 2N4261
Q288	151-0434-00	Silicon, PNP, 2N4261
R109	311-1268-00	10 kΩ, Var
*R110	311-1228-00	10 kΩ, Var
R113	317-0681-00	680 Ω (nominal value) selected
R137	317-0242-00	2.4 kΩ (nominal value) selected
R138	317-0202-00	2 kΩ (nominal value) selected
R145	315-0620-00	62 Ω, 1/4 W, 5%
R176	311-1226-00	2.5 kΩ, Var
R209	311-1268-00	10 kΩ, Var
R213	317-0681-00	680 Ω (nominal value) selected

M19,911/573

*Note: SN B010100-B099999 R110 was 311-1268-00.

CHANGE TO:

R237	317-0242-00	2.4 kΩ (nominal value) selected
R238	317-0202-00	2 kΩ (nominal value) selected
R245	315-0620-00	62 Ω, 1/4 W, 5%
R276	311-1226-00	2.5 kΩ, Var
R348	315-0331-00	330 Ω, 1/4 W, 5%
R398	317-0430-00	43 Ω, 1/8 W, 5%
R399	315-0330-00	33 Ω, 1/4 W, 5%
R425	311-1227-00	5 kΩ, Var
RT452	307-0125-00	500 Ω, Thermal
S375A	263-1019-00	Actuator assembly, slide, 100 or 20 MHz, BW
U120	155-0085-01	Hybrid, dual FET input & amplifier
U220	155-0085-01	Hybrid, dual FET input & amplifier
VR144	152-0166-00	Selected from 1N753A, 0.4 W, 6.2 V, 5%
VR244	152-0166-00	Selected from 1N753A, 0.4 W, 6.2 V, 5%
VR290	152-0166-00	Selected from 1N753A, 0.4 W, 6.2 V, 5%
VR396	152-0166-00	Selected from 1N753A, 0.4 W, 6.2 V, 5%

REMOVE:

C375	281-0544-00	5.6 pF, Cer, 500 V, 10%
C376	281-0589-00	170 pF, Cer, 500 V, 5%
R149	321-0260-00	4.99 kΩ, 1/8 W, 1%
RT149	307-0124-00	5 kΩ, Thermal
R249	321-0260-00	4.99 kΩ, 1/8 W, 1%
RT249	307-0124-00	5 kΩ, Thermal
R391	321-0154-00	392 Ω, 1/8 W, 1%

ADD:

C377	281-0564-00	24 pF, Cer, 5%
C378	283-0640-00	160 pF, 100 V, 1%

ADD:

LR377	108-0760-00	67 nH
LR378	108-0760-00	67 nH
R107	317-0101-00	100 Ω, 1/8 W, 5%
R108	317-0101-00	100 Ω, 1/8 W, 5%
R207	317-0101-00	100 Ω, 1/8 W, 5%
R208	317-0101-00	100 Ω, 1/8 W, 5%
R391A	321-0163-00	487 Ω, 1/8 W, 1%
R391B	315-0182-00	1.8 kΩ, 1/4 W, 5%

MECHANICAL PARTS LIST CORRECTION

Page 8-2

CHANGE TO:

Fig. 1-39	333-1636-02	1	PANEL, front
Fig. 1-51	384-1162-01	1	SHAFT, extension w/Knob, TRIG VIEW, BW

ADD: (Page 8-12)

Fig. 4-53	129-0385-00	1	POST, standoff
Fig. 4-53	211-0116-00	1	SCREW, 4-40 x .312 w/2 lockwashers

Page 8-12

CHANGE TO:

Fig. 4-53	105-0421-00	1	ACTUATOR ASSEMBLY, slide switch-TRIG VIEW

Page 8-13

CHANGE TO:

Fig. 4-	263-1019-00	1	ACTUATOR ASSEMBLY, 100 or 20 MHz BW
	- - - - - -		actuator assembly includes:
Fig. 4-57	376-0146-00	1	COUPLER, shaft
-58	105-0517-00	1	ACTUATOR, slide switch
-59	351-0355-00	1	GUIDE, slide switch
-60	214-1126-00	2	SPRING, detent

CHANGE TO:

Fig. 4-60	214-1127-00	2	SPRING, detent
	366-1471-01	1	KNOB (not shown)
	255-0345-00	1	ROD, glass epoxy

SCHEMATIC CORRECTION

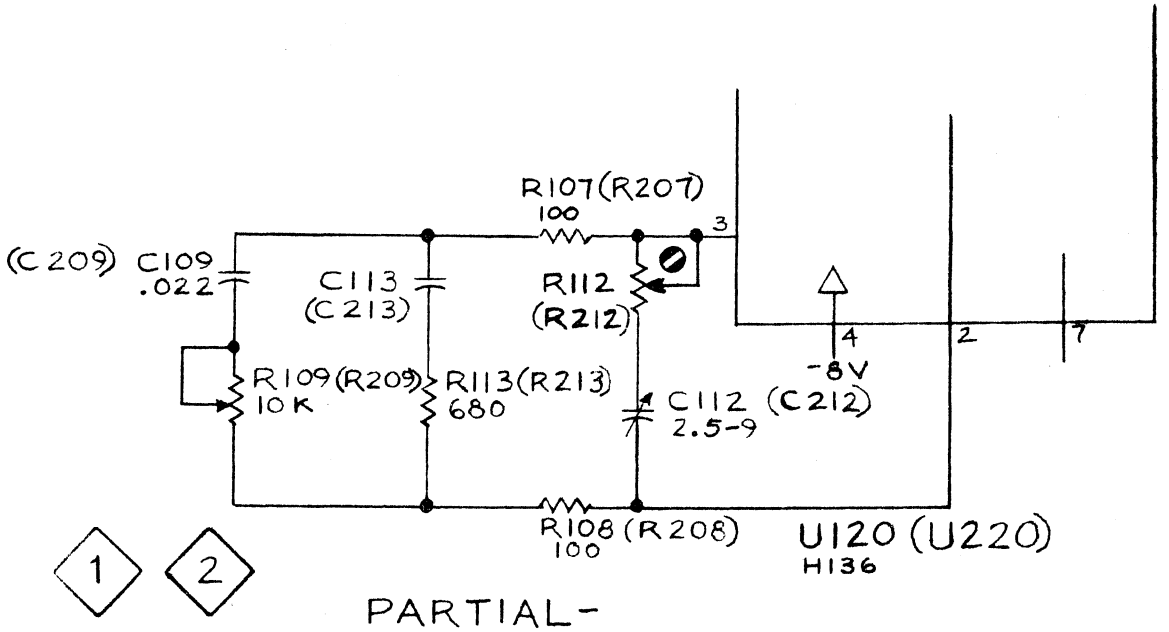

PARTIAL-
CH 1 & 2 VERTICAL PREAMP

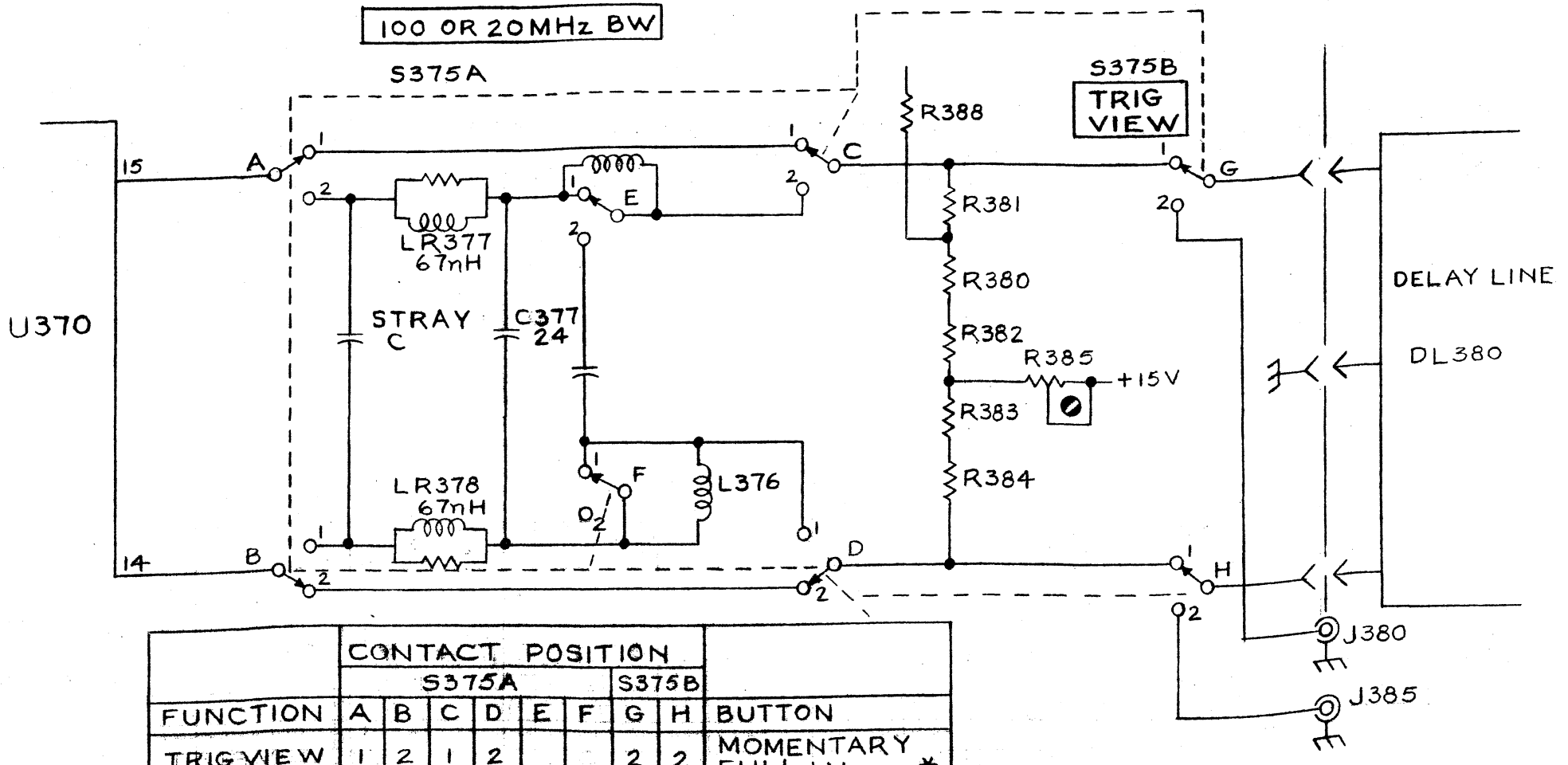

FUNCTION	CONTACT POSITION S375A A	B	C	D	E	F	S375B G	H	BUTTON
TRIG VIEW	1	2	1	2			2	2	MOMENTARY FULL IN *
FULL BW	1	2	1	2			1	1	FIRST DETENT FROM FULL IN
100 MHz	2	1	2	1	1	1	1	1	CENTER DETENT
20MHz	2	1	2	1	2	2	1	1	FULL OUT

* NOTE: S375C ON (5) IS IN CLOSED POSITION FOR TRIG VIEW

SHOWN IN FULL BANDWIDTH

VERTICAL CHANNEL SWITCHING

(3)

ELECTRICAL PARTS LIST AND SCHEMATIC CORRECTION

CHANGE TO:

A9	670-2239-01	Interface Circuit Board Assembly
C1124	283-0116-00	820 pF, 500 V, 5%
C1134	283-0116-00	820 pF, 500 V, 5%
C1178	283-0644-00	150 pF
C1326	281-0519-00	47 pF, 500 V
C1512	281-0512-00	27 pF, 500 V
CR1489	152-0107-00	Silicon, TI60 or 1N647
L1232	276-0507-00	Core, ferramic suppressor (selected)
Q1114	151-0127-00	Silicon, NPN, selected from 2N2369
Q1140	151-0223-00	Silicon, NPN, 2N4275
Q1496	151-0280-00	Silicon, PNP, MM4003
R1114	321-0126-00	200 Ω, 1/8 W, 1%
R1116	315-0182-00	1.8 kΩ, 1/4 W, 5%
R1117	315-0303-00	30 kΩ, 1/4 W, 5%
R1124	315-0361-00	360 Ω, 1/4 W, 5%
R1128	321-0045-00	28.7 Ω, 1/8 W, 1%
R1134	315-0431-00	430 Ω, 1/4 W, 5%
R1138	321-0045-00	28.7 Ω, 1/8 W, 1%
R1141	321-0190-00	931 Ω, 1/8 W, 1%
R1259	321-0287-00	9.53 kΩ 1/8 W, 1%
R1483	315-0472-00	4.7 kΩ, 1/4 W, 5%
R1484	315-0203-00	20 kΩ, 1/4 W, 5%
R1485	315-0273-00	27 kΩ, 1/4 W, 5%
R1488	308-0127-00	2.5 kΩ, 5 W

REMOVE:

C1112	283-0010-00	0.05 μF, Cer, 50 V
C1116	283-0000-00	0.001 μF, Cer, 500 V, +100%-0%

REMOVE:

C1171	281-0564-00	24 pF, Cer, 500 V, 5%
C1381	283-0002-00	0.01 μF, Cer, 500 V
C1486	281-0523-00	100 pF, Cer, 350 V, 20%
L1209	108-0245-00	3.9 μH
R1112	321-0258-00	4.75 kΩ, 1/8 W, 1%
R1113	321-0243-00	3.32 kΩ, 1/8 W, 1%
R1115	315-0470-00	47 Ω, 1/4 W, 5%
R1121	315-0560-00	56 Ω, 1/4 W, 5%
R1122	315-0201-00	200 Ω, 1/4 W, 5%
R1335	311-1373-00	5 kΩ, Var
VR1381	152-0247-00	1N989B, 0.4 W, 150 V, 5%

ADD:

C1107	281-0547-00	2.7 pF, 500 V, 10%
C1114	283-0010-00	0.05 μF, Cer, 50 V
C1142	283-0111-00	0.1 μF, Cer, 50 V
C1329	283-0002-00	0.01 μF, Cer, 500 V
C1455	283-0004-00	0.02 μF, Cer, 150 V
C1504	281-0551-00	390 pF, 500 V
CR1329	152-0107-00	Silicon, TI60 ro 1N647
CR1512	152-0141-02	Silicon, 1N4152
L1252	276-0507-00	Core, ferramic suppressor
Q1112	151-0302-00	Silicon, NPN, 2N2222A
Q1497	151-0301-00	Silicon, PNP, 2N2907
R1112A	316-0100-00	10 Ω, 1/4 W, 10%
R1112B	321-0212-00	1.58 kΩ, 1/8 W, 1%
R1113A	316-0100-00	10 Ω, 1/4 W, 10%
R1113B	321-0300-00	13 kΩ, 1/8 W, 1%

ADD:

R1118	315-0201-00	200 Ω, 1/4 W, 5%
R1120	315-0433-00	43 kΩ, 1/4 W, 5%
R1232	317-0621-00	620 Ω, 1/8 W, 5%
R1252	317-0621-00	620 Ω, 1/8 W, 5%
R1329	316-0106-00	10 MΩ, 1/4 W, 10%
R1335A	311-1533-00	Dual 5 kΩ
R1335B		2.5 MΩ
R1489	315-0180-00	18 Ω, 1/4 W, 5%
R1495	316-0221-00	220 Ω, 1/4 W, 10%
VR1124	152-0175-00	5.6 V, Zener Diode
VR1134	152-0166-00	Selected from 1N753A, 0.4 W, 6.2 V, 5%

NOTE: C1455 is added in parallel with R1444.

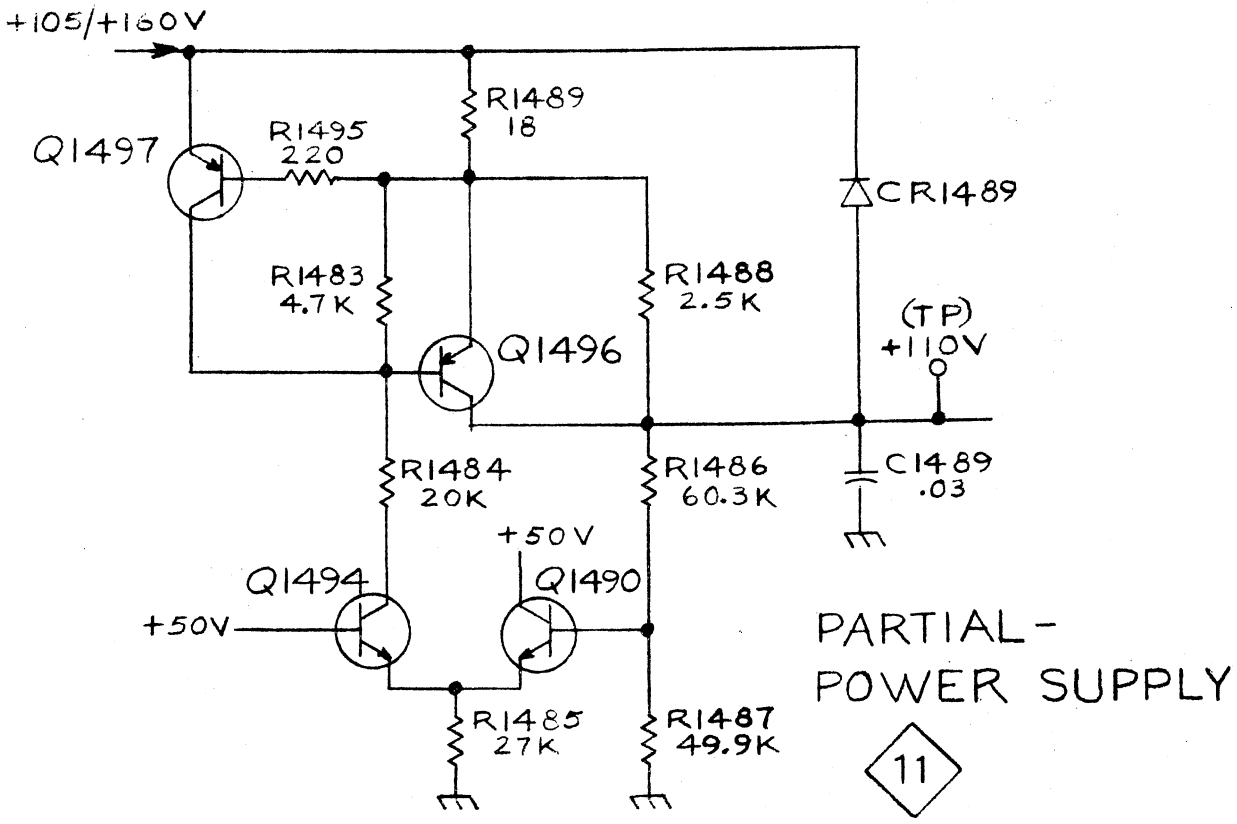

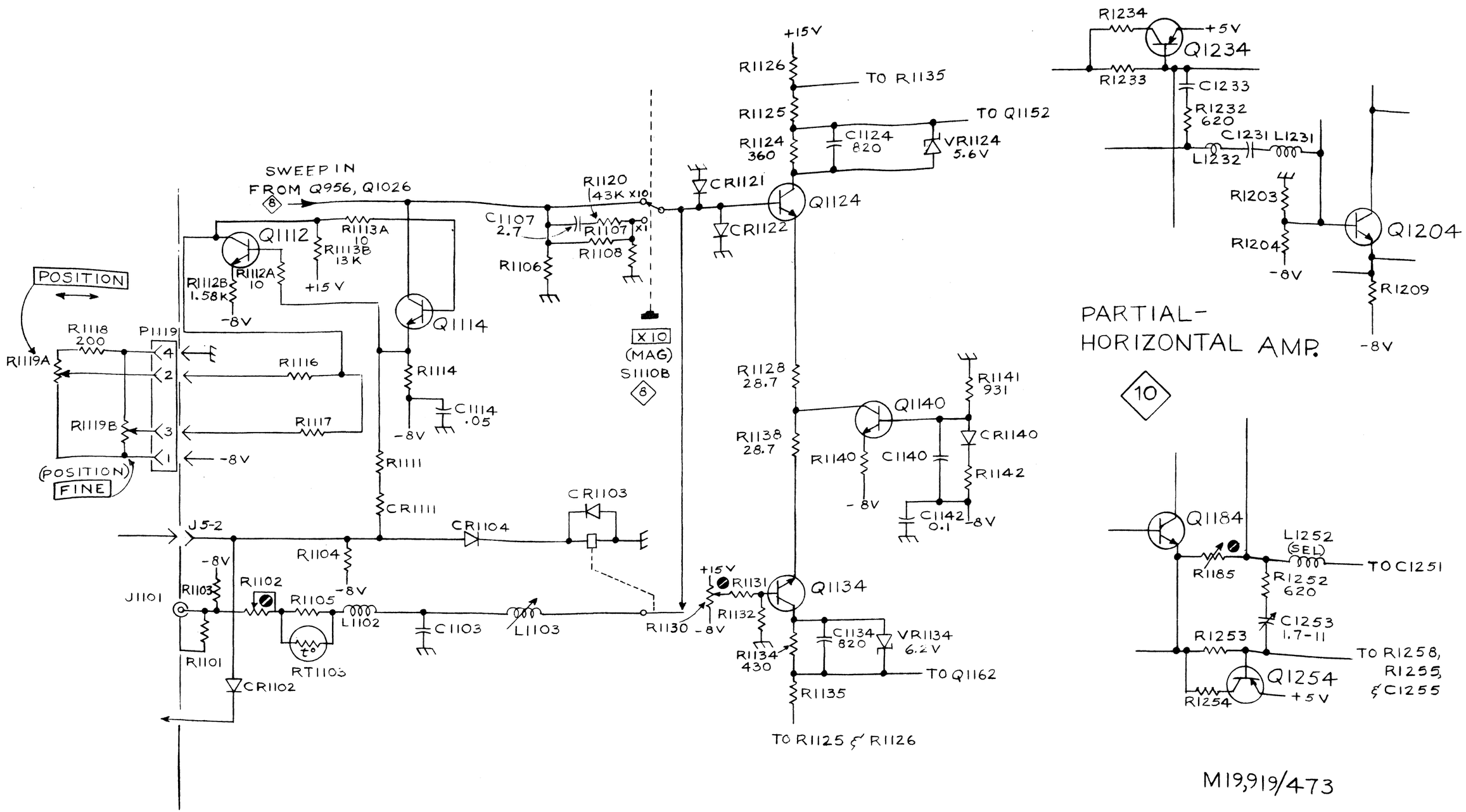
SWEEP IN
FROM Q956, Q1026
8
POSITION
R1119A
R1118
200
P1119
R1116
R1117
R1119B
(POSITION)
FINE
-8V
Q1112
R1113A
10
R1113B
13K
R1112A
10
R1112B
1.58K
+15V
Q1114
R1114
C1114
.05
R1111
CR1111
J5-2
CR1104
CR1103
R1104
J1101
R1103
R1102
R1105
L1102
RT1103
R1101
CR1102
C1103
L1103
R1130
C1107
2.7
R1120
43K
X10
X1
R1107
R1108
R1106
X10
(MAG)
S1110B
8
CR1121
CR1122
Q1124
R1126
R1125
R1124
360
TO R1135
TO Q1152
C1124
820
VR1124
5.6V
R1128
28.7
R1138
28.7
Q1140
R1140
C1140
R1141
931
CR1140
R1142
C1142
0.1
Q1134
R1131
R1132
R1134
430
R1135
C1134
820
VR1134
6.2V
TO Q1162
TO R1125 & R1126
R1234
+5V
Q1234
R1233
C1233
R1232
620
C1231
L1231
L1232
R1203
R1204
Q1204
R1209
PARTIAL-
HORIZONTAL AMP.
10
Q1184
R1185
L1252
(SEL)
TO C1251
R1252
620
C1253
1.7-11
R1253
TO R1258,
R1255,
& C1255
Q1254
R1254

M19,919/473

SCHEMATIC CORRECTIONS

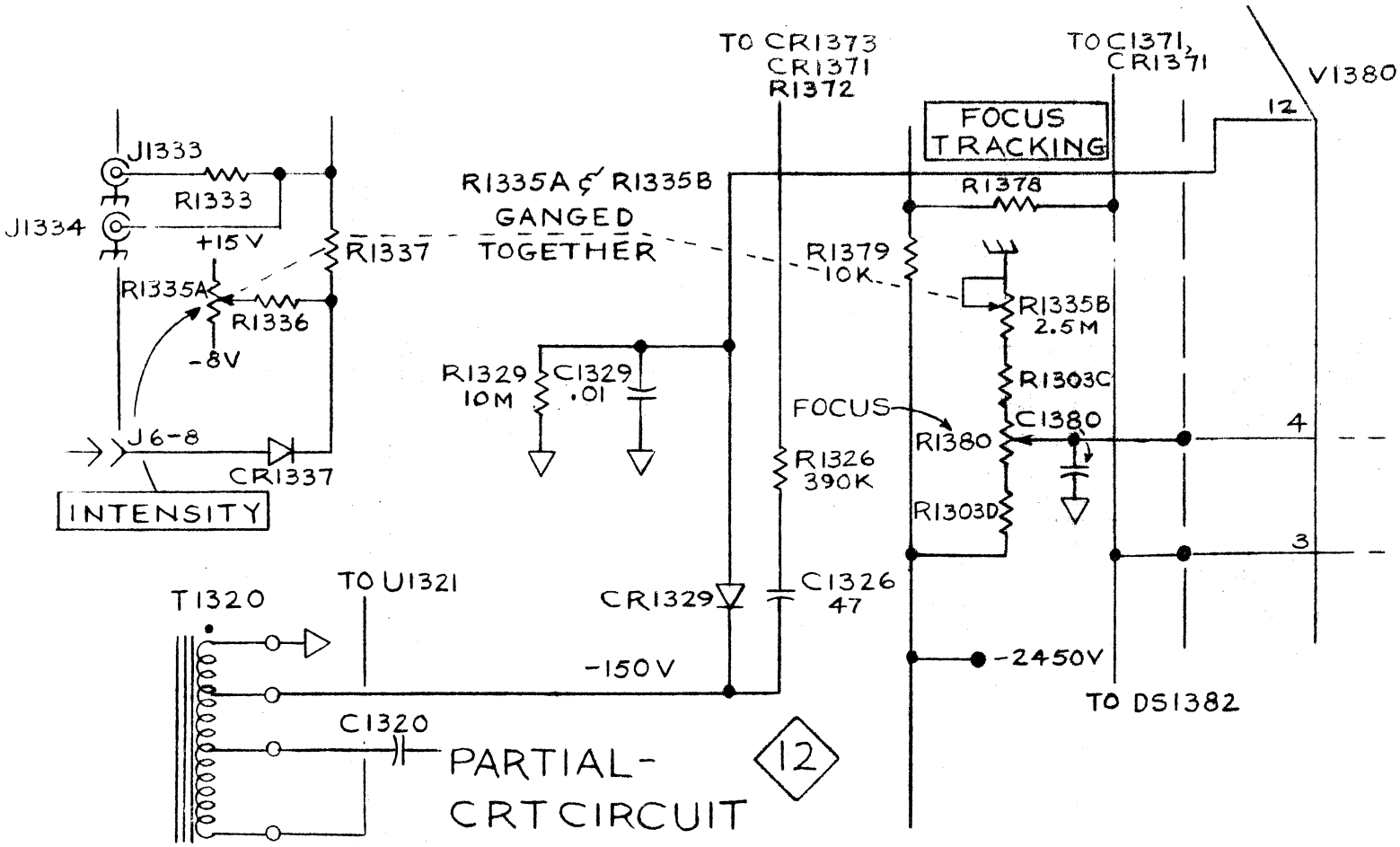

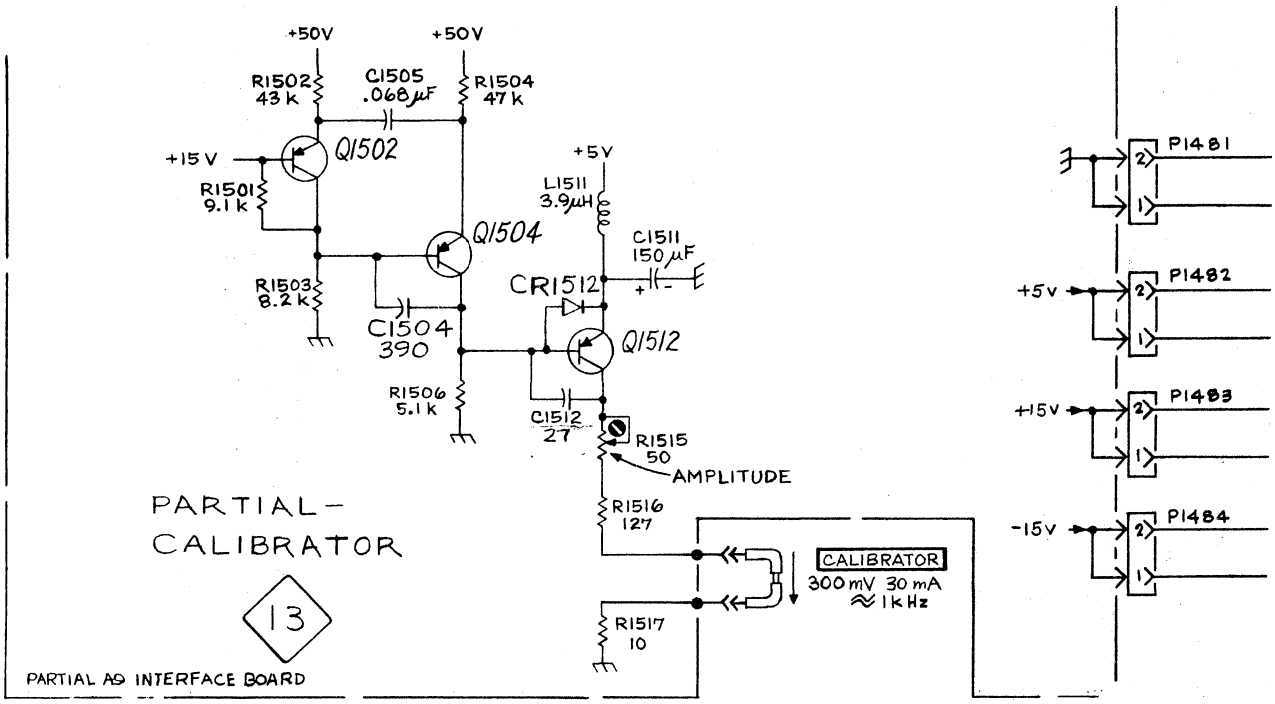

475 EFF SN B100000-up

ELECTRICAL PARTS LIST CORRECTION

CHANGE TO:

CR104	152-0323-01	Silicon, SE365
CR105	152-0323-01	Silicon, SE365
CR204	152-0323-01	Silicon, SE365
CR205	152-0323-01	Silicon, SE365

ADD:

CR103	152-0323-01	Silicon, SE365
CR203	152-0323-01	Silicon, SE365

(Add CR103 and CR203 in series with CR104 and CR204 respectively.)

475 EFF SN B110000-up

MECHANICAL PARTS LIST CORRECTION

CHANGE TO:

Page 8-6

Fig. 2-66	369-0031-00	B010100	B109999	1	IMPELLER, fan w/setscrew
	369-0031-01	B110000		1	IMPELLER, fan w/setscrew
	105-0507-00	XB110000		1	STOP, end play

475 EFF SN B100000-up

ELECTRICAL PARTS LIST CORRECTION

CHANGE TO:

U140	155-0078-07	Monolithic, vertical amplifier, selected
U240	155-0078-07	Monolithic, vertical amplifier, selected
U450	155-0078-05	Monolithic, vertical amplifier, selected

ELECTRICAL PARTS LIST AND SCHEMATIC CORRECTION

CHANGE TO:

Q1124	151-0212-00	Silicon, NPN, 2N3572
Q1134	151-0212-00	Silicon, NPN, 2N3572
R922	315-0471-00	470 Ω, 1/4 W, 5%

REMOVE:

C984	281-0503-00	8 pF, 500 V
RT1123	307-0124-00	5 kΩ, Thermal

ADD:

C985	281-0523-00	100 pF, 350 V
R984	315-0201-00	200 Ω, 1/4 W, 5%
R1105	315-0510-00	51 Ω, 1/4 W, 5%
RT1103	307-0125-00	500 Ω, Thermal

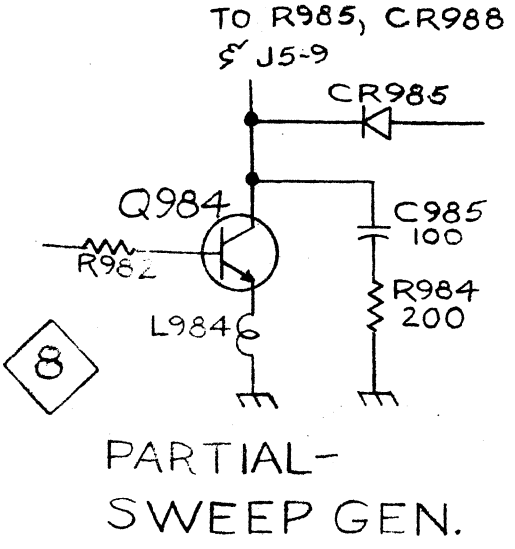

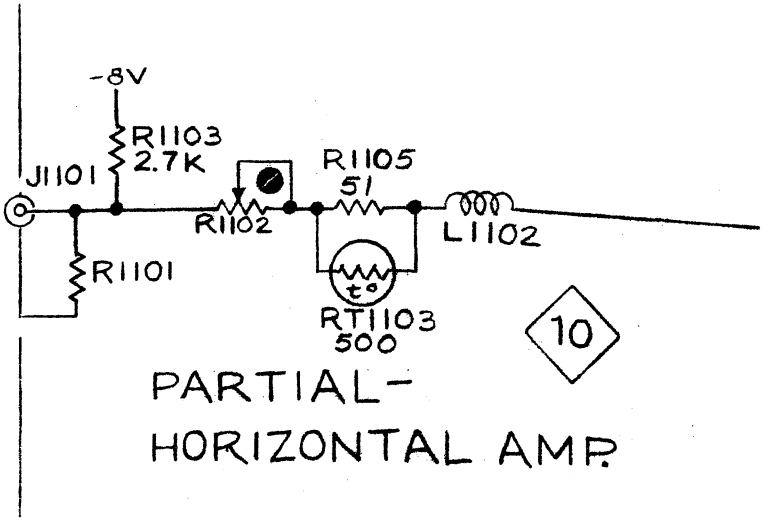

ELECTRICAL PARTS LIST AND SCHEMATIC CORRECTION

CHANGE TO:

C477	281-0123-00	5-25 pF, Cer, 100 V
R447	321-0227-00	2.26 kΩ, 1/8 W, 1%
R448	321-0164-00	499 Ω, 1/8 W, 1%
R454	317-0681-00	680 Ω (nominal value) selected (per M20,104 also)
R455	317-0102-00	1 kΩ (nominal value) selected
R466	311-1278-00	250 Ω, Var
R467	317-0240-00	24 Ω (nominal value) selected
R468	321-0061-00	42.2 Ω, 1/8 W, 1%
R469	321-0061-00	42.2 Ω, 1/8 W, 1%
R470	311-1279-00	500 Ω, Var
R474	317-0240-00	24 Ω (nominal value) selected
R477	315-0821-00	820 Ω, 1/4 W, 5%

REMOVE:

L466		#22 Bare Strap
R446	321-0136-00	255 Ω, 1/8 W, 1%

ADD:

C472	281-0558-00	18 pF, Cer, 500 V
LR467	108-0328-00	0.3 μH
R456	315-0220-00	22 Ω, 1/4 W, 5%
VR467	152-0278-00	1N4372A, 0.4 W, 3V, 5%

SCHEMATIC CORRECTION

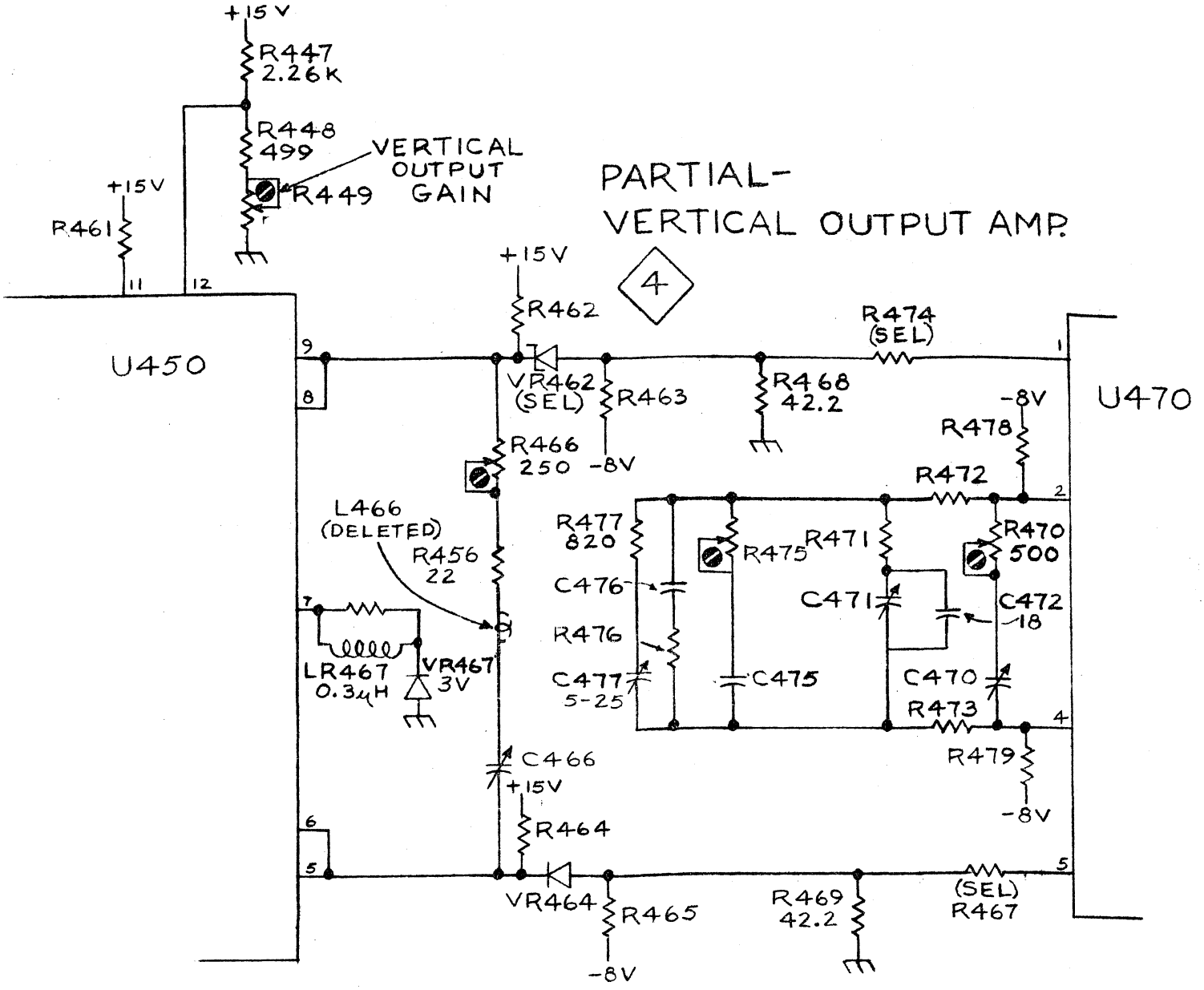

Note: Original schematic was in error, R466 always connected to U450 pins 8 and 9, and C466 always connected to pins 5 and 6 with L466 located between R466 and C466. (This mod removes L466)

475 EFF SN B070000-up

ELECTRICAL PARTS LIST CORRECTION

CHANGE TO:

R142	321-0072-00	54.9 ohm (nominal value) selected
R143	321-0072-00	54.9 ohm (nominal value) selected
R242	321-0072-00	54.9 ohm (nominal value) selected
R243	321-0072-00	54.9 ohm (nominal value) selected

475 EFF SN B050000-up

ELECTRICAL PARTS LIST AND SCHEMATIC CORRECTION

ADD:

R141	317-0120-00	12 Ω, 1/8 W, 5% (Added when required)
R144	317-0120-00	12 Ω, 1/8 W, 5% (Added when required)
R241	317-0120-00	12 Ω, 1/8 W, 5% (Added when required)
R244	317-0120-00	12 Ω, 1/8 W, 5% (Added when required)

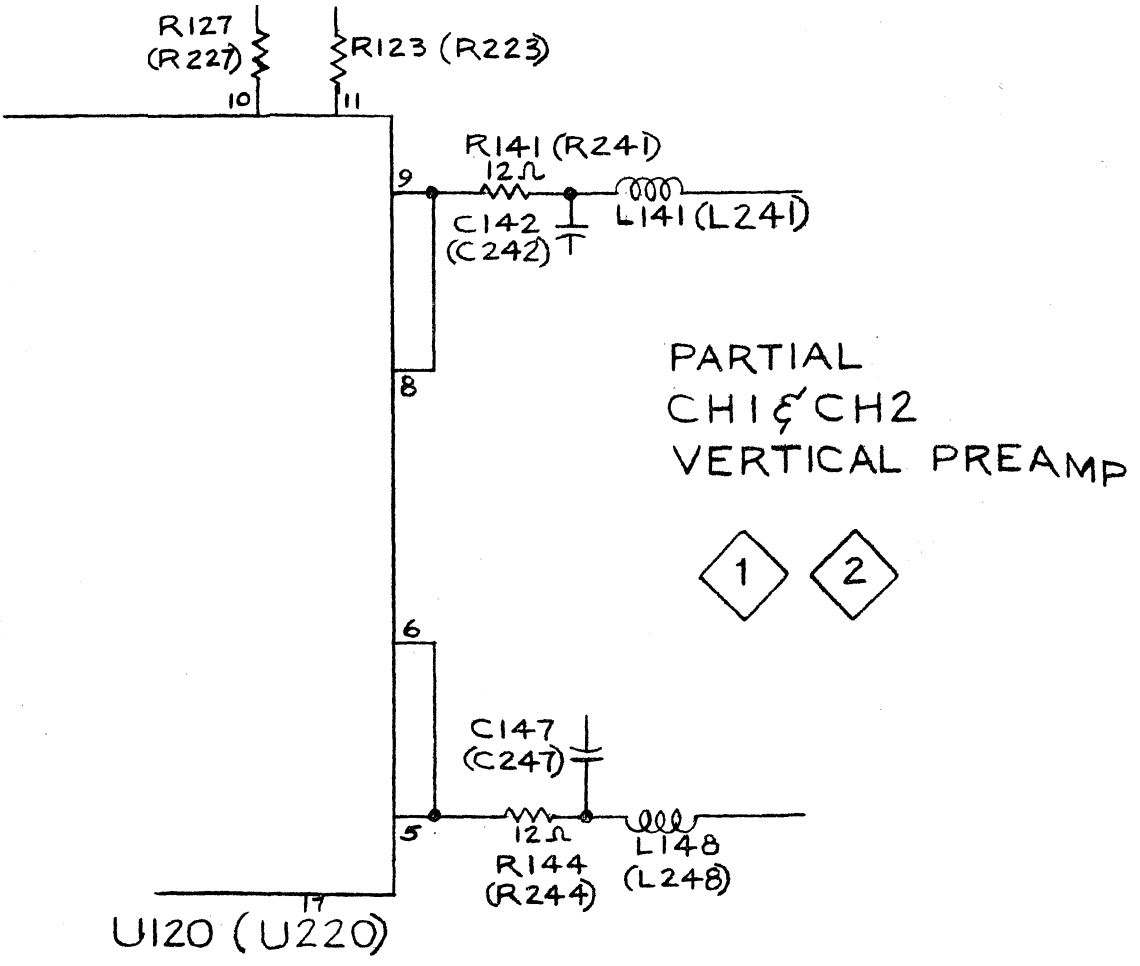

ELECTRICAL PARTS LIST AND SCHEMATIC CORRECTION

CHANGE TO:

Q390	151-0441-00	Silicon, NPN, 2N2857

REMOVE:

R396 (replaced by a bare strap)	315-0100-00	10 Ω, 1/4 W, 5%

ADD:
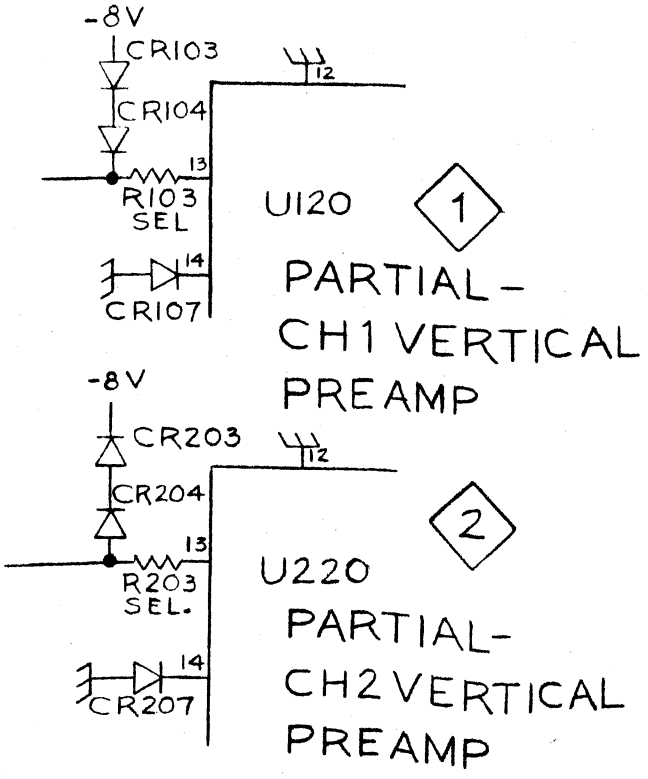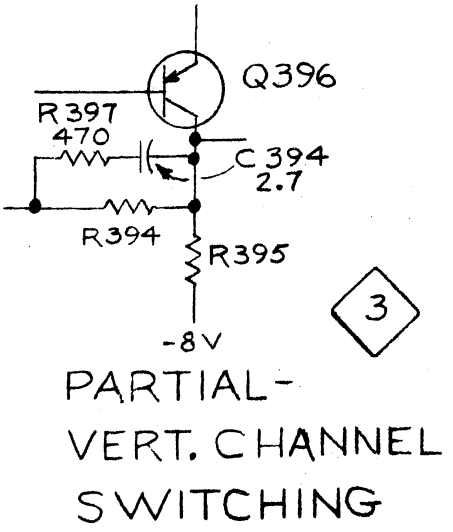
C394	281-0547-00	2.7 pF, Cer, 500 V
R103	317-0120-00	12 Ω (nominal value) selected
R203	317-0120-00	12 Ω (nominal value) selected
R397	315-0471-00	470 Ω, 1/4 W, 5%