INSTRUCTION MANUAL

Serial Number _____

D10 SINGLE BEAM DISPLAY UNIT

593 - 2830
956 - 1774

Tektronix, Inc. ● P. O. Box 500 ● Beaverton, Oregon 97005 ● Phone 644-0161 ● Cables: Tektronix

070-1132-00 **671**

All Tektronix instruments are warranted against defective materials and workmanship for one year.

Any questions with respect to the warranty, mentioned above should be taken up with your Tektronix Field Engineer or Representative.

All requests for repairs and replacement parts should be directed to the Tektronix Field Office or Representative in your area. This procedure will assure you the fastest possible service. Please include the instrument Type (or Part Number) and Serial or Model Number with all requests for parts or service.

Specifications and price change privileges reserved.

U.S.A. and foreign Tektronix products covered by U.S. and foreign patents and/or patents pending.

TABLE OF CONTENTS

Abbreviations and symbols used in this manual are based on or taken directly from IEEE Standard 260 "Standard Symbols for Units", MIL-STD-12B and other standards of the electronics industry. Change information, if any, is located at the rear of this manual.

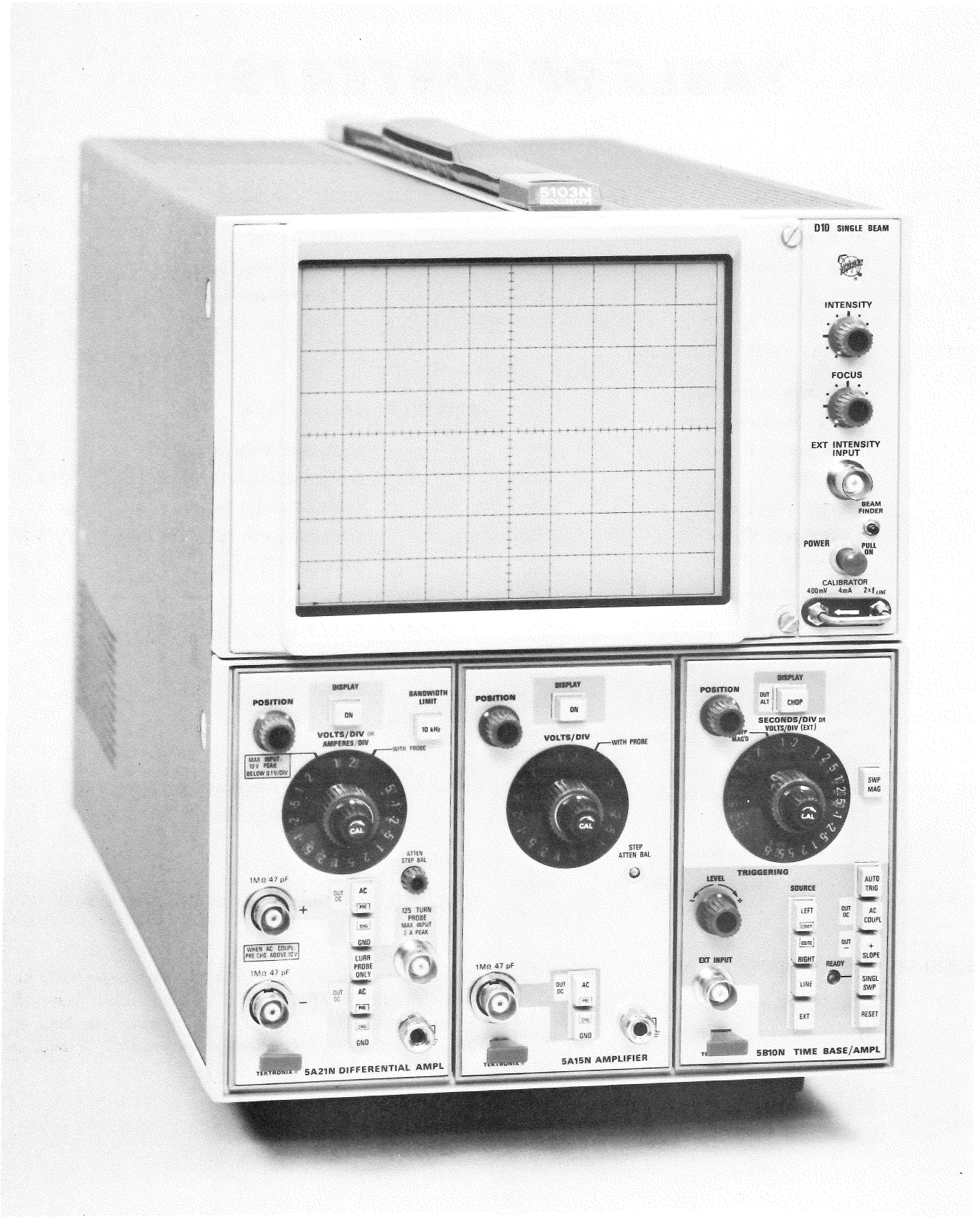

Fig. 1-1. 5103N Oscilloscope with a D10 Single Beam Display Unit.

SECTION 1
D10 SPECIFICATION

Change information, if any, affecting this section will be found at the rear of this manual.

Introduction

The D10 Single-Beam Display unit provides a single-beam cathode-ray tube (CRT) display for Tektronix 5100-series Oscilloscopes. The D10 module is operated with a power supply/amplifier module, and comprises one-half of the oscilloscope mainframe. It has an electrostatic-deflection CRT with an 8 X 10 division (one-half inch per division) internal black graticule. A bright display is provided by a 3.5-kilovolt accelerating potential. Provision is made for application of Z-axis signals, and a front-panel loop provides a calibration signal.

The following electrical characteristics apply over an ambient temperature range of 0°C to +50°C. Refer to the 5100-series Oscilloscope System manual for environmental specifications.

TABLE 1-1

ELECTRICAL CHARACTERISTICS

Characteristic	Performance Requirement	Supplemental Information
Cathode-Ray Tube		
Phosphor	P31 standard.	
CRT Accelerating Voltage		3.5 kilovolts.
Orthogonality		90°, within 1°.
Geometry		0.1 division or less.
External Intensity Input		
Useful Input Voltage	+5 volts will turn on display to a normal brightness level from an off level; −5 volts will turn display off from a normal brightness level.	
Usable Frequency Range	DC to one megahertz.	
Input R and C		About 10 kilohms, paralleled by about 40 picofarads.
Maximum Safe Input		±50 volts (DC + peak AC).
Calibrator		
Voltage	400 millivolts, within 1%.	
Current	4 milliamperes, within 1%.	
Frequency	Twice the line frequency.	
Power Input		
Line Voltage (RMS)		
With standard transformer	Nominal 110 V, 120 V; within 10%.	
With optional export transformer	Nominal 100 V, 110 V, 120 V, 200 V, 220 V, 240 V; within 10%.	

ELECTRICAL CHARACTERISTICS (cont)

Characteristics	Performance Requirement	Supplemental Information
Line Frequency Range		
With standard transformer		60 hertz and 400 hertz.
With optional export transformer		50 to 60 hertz and 400 hertz.
Power Consumption (including Power Supply/ Amplifier module)		140 watts maximum.

SECTION 2
OPERATING INSTRUCTIONS

Change information, if any, affecting this section will be found at the rear of this manual.

Introduction

The D10 Single Beam display module operates with a Tektronix 5100-series power supply/amplifier module to form an oscilloscope mainframe. An understanding of the D10 operation and capabilities is essential for obtaining best results. This section of the manual gives a brief functional description of the front-panel controls and connectors, a familiarization procedure, and general operating information.

Preliminary Information

The Operation Instructions section of the 5100-series Oscilloscope System instruction manual should be referred to for initial preparation. It contains information for installation of modules and plug-ins, correct operating voltage and temperature, and general oscilloscope usage.

CONTROLS AND CONNECTORS

This is a brief description of the function or operation of the front-panel controls and connectors. More detailed information is given under General Operating Information.

INTENSITY	Controls display brightness.
FOCUS	Provides adjustment to obtain a well-defined display.
POWER	Used to turn instrument power on or off.
BEAM FINDER	Brings beam on-screen; limits display to area inside graticule and intensifies beam.
CALIBRATOR Loop	Provides positive-going accurate 400-millivolt and 4-milliampere square wave at a frequency of twice the line frequency for calibration and probe compensation.
EXT INTENSITY INPUT Connector	Permits application of Z-axis signals to the CRT (DC coupled). Positive-going signal increases intensity.
TRACE ROTATION (Rear Panel)	Permits alignment of the trace with respect to the graticule lines.

BASIC OPERATION

General

The following steps demonstrate the use of the controls and connectors of the D10. It is recommended that this procedure be followed completely for familiarization with this instrument.

Setup Information

1. Make sure the oscilloscope system is complete. The D10 must be properly connected to the power supply/amplifier module and the single-beam auxiliary board must be installed on the plug-in interface board. A 5A-series amplifier plug-in should be in one of the vertical (left or center) plug-in compartments and a 5B-series time-base plug-in should be in the horizontal (right) compartment.

2. Set the POWER switch to off (pushed in) and connect the D10 to a power source that meets the voltage and frequency requirements of this instrument. See Operating Voltage (Preliminary Procedure) in the Operating Instructions section of the 5100-Series Oscilloscope System manual.

3. Turn the INTENSITY control counterclockwise and pull the POWER switch out to turn the instrument on. Set the front-panel controls as follows:

D10

FOCUS	Centered

Amplifier Plug-in

Display	On
Position	Centered
Volts/Div	.1
Variable Volts/Div	Cal (fully clockwise)
Input Coupling	DC

Time-Base Plug-in

Display	Alternate (button out)
Position	Centered
Seconds/Div	5 ms
Variable Seconds/Div	Cal (fully clockwise)
Sweep Magnifier	Off
Triggering Level	Counterclockwise

Triggering Source	Left (or Right if the amplifier plug-in is in the center compartment)
Triggering/Sweep Mode	Auto Trig, DC Coupling, + Slope, Normal Sweep

4. Advance the INTENSITY control until the trace is at the desired viewing level. The trace should appear near the graticule center.

5. Connect a 1X probe or test lead from the CALIBRATOR loop to the amplifier plug-in input connector.

6. Turn the Triggering Level control clockwise until a stable display is obtained. Adjust the vertical and horizontal Position controls so the display is centered vertically and starts at the left edge of the graticule.

7. Adjust the FOCUS control for a sharp, well-defined display over the entire trace length.

8. Disconnect the input signal and position the trace vertically so it coincides with the center horizontal line of the graticule.

9. If the trace is not parallel with the center horizontal line, see Trace Alignment Adjustment in this section.

Calibration Check

10. Move the trace two divisions below graticule center and reconnect the calibrator signal to the amplifier plug-in input connector.

11. The display should be four divisions in amplitude with six complete cycles (five complete cycles for 50-hertz line frequency) shown horizontally. An incorrect display indicates that the oscilloscope mainframe or plug-ins need to be recalibrated. See the Operating Instructions section of the 5100-Series Oscilloscope System manual for complete information.

Beam Finder

12. Move the display off-screen with the vertical Position control.

13. Push the BEAM FINDER button and observe that the display compresses into the screen area. Reposition the display to screen center and release the BEAM FINDER button.

External Intensity Input

14. Move the calibrator signal from the amplifier plug-in input connector to the EXT INTENSITY INPUT connector.

15. Set the Triggering Source to Line and slowly rotate the INTENSITY control counterclockwise until the trace appears to be a series of dimmed and brightened segments. The brightened segments correspond with the tops of the calibrator square waves.

This completes the description of the basic operating procedure for the D10. Instrument operations not explained here, or operations which need further explanation are discussed under General Operating Information.

GENERAL OPERATING INFORMATION

Graticule

The graticule of the D10 is internally marked on the faceplate of the CRT to provide accurate no-parallax measurements. The graticule is marked with eight vertical and ten horizontal divisions. Each division is one-half inch square. In addition, each major division is divided into five minor divisions. The vertical gain and horizontal timing are calibrated to the graticule so accurate measurements can be made from the graticule.

Intensity Control

The intensity of the display on the CRT is controlled by the INTENSITY control. This control is adjusted so the display is easily visible but not overly bright. It will probably require readjustment for different displays or sweep rates. Particular care should be exercised when only a spot is displayed. A high-intensity spot may burn the CRT phosphor and cause permanent damage to the CRT if allowed to remain too long.

Display Focus

If a well-defined display cannot be obtained with the FOCUS control, even at low intensity settings, adjustment of the internal astigmatism control may be required.

To check for proper setting of the Astig control, slowly turn the FOCUS control through the optimum setting with a signal displayed on the CRT screen. If the Astig control is correctly set, the vertical and horizontal portions of the trace will come into sharpest focus at the same position of the FOCUS control.

Trace Alignment Adjustment

If a free-running trace is not parallel with the horizontal graticule lines, set the TRACE ROTATION adjustment (rear panel) as follows: Position the trace to the center horizontal line and adjust the TRACE ROTATION control so the trace is parallel with the horizontal graticule lines.

Beam Finder

The BEAM FINDER switch provides a means of locating a display which overscans the viewing area either vertically or horizontally. When the BEAM FINDER switch is pressed, the display is compressed within the graticule area. To locate and reposition an overscanned display, use the following procedure:

1. Press the BEAM FINDER switch, and while holding it in, increase the vertical and horizontal deflection factors until the display is reduced to about two divisions vertically and four divisions horizontally (the horizontal deflection needs to be reduced only when in the X-Y mode of operation).

2. Adjust the vertical and horizontal position controls to center the display about the vertical and horizontal centerlines.

3. Release the BEAM FINDER switch; the display should remain within the viewing area.

Intensity Modulation

Intensity (Z-axis) modulation can be used to relate a third item of electrical phenomena to the vertical (Y-axis) and the horizontal (X-axis) coordinates without affecting the waveshape of the displayed signal. The Z-axis modulating signal applied to the EXT INTENSITY INPUT changes the intensity of the displayed waveform to provide this type of display. The voltage amplitude required for visible trace modulation depends on the setting of the INTENSITY control. About +5 volts will turn on the display to a normal brightness level from an off level, and about −5 volts will turn the display off from a normal brightness level. "Gray scale" intensity modulation can be obtained by applying signals between these levels. Maximum safe input voltage is + or −50 volts. Usable frequency range of the Z-axis circuit is DC to one megahertz.

Time markers applied to the EXT INTENSITY INPUT provide a direct time reference on the display. With uncalibrated horizontal sweep or X-Y operation, the time markers provide a means of reading time directly from the display. However, if the markers are not time-related to the displayed waveform, a single-sweep display should be used (for internal sweep only) to provide a stable display.

Calibrator

The internal calibrator of the D10 provides a convenient signal source for checking basic vertical gain and sweep timing. The calibrator signal is also very useful for adjusting probe compensation as described in the probe instruction manual. The output square-wave voltage is 400 millivolts, within 1%, and the square-wave current is 4 milliamperes, within 1%. The frequency of the square-wave signal is twice the power-line frequency. The signal is obtained by clipping the probe to the loop.

Display Photography

A permanent record of the CRT display can be obtained with an oscilloscope camera system. The CRT bezel of the D10 provides integral mounting for a Tektronix oscilloscope camera. A camera with a light source is required to illuminate the graticule. The instruction manuals for the Tektronix oscilloscope cameras include complete instructions for obtaining waveform photographs.

Oscilloscope Applications

The 5100-Series Oscilloscope, including its associated display module and plug-in units, provides a very flexible measurement system. Specific applications for the individual plug-ins are described in the manuals for those units. Refer to the Operating Instructions section of the 5100-Series Oscilloscope System manual for basic oscilloscope applications, including peak-to-peak AC voltage measurements, instantaneous DC voltage measurements, comparison measurements, time duration measurements, determining frequency, risetime measurements, and X-Y phase measurements.

SECTION 3
CIRCUIT DESCRIPTION

Change information, if any, affecting this section will be found at the rear of this manual.

Introduction

This section of the manual contains an electrical description of the circuits in the D10 Single-Beam Display Unit. An overall block diagram of the unit and complete schematics are given on pullout pages at the rear of this manual.

BLOCK DIAGRAM DESCRIPTION

The Vertical and Horizontal Deflection Amplifiers provide final amplification for the signals from the plug-in units. They produce push-pull outputs suitable to drive the CRT vertical and horizontal deflection plates. Beam-finding circuitry is incorporated to limit the display within the screen area when the front-panel BEAM FINDER button is pressed. A variable capacitor between the output lines of the Vertical Deflection Amplifier permits adjustment of the inherent phase shift between the vertical and horizontal deflection systems to zero degrees.

The CRT Circuit produces the high voltage (about −3.4 kilovolts) and contains the controls necessary for operation of the cathode-ray tube. The CRT Circuit also contains the Z-Axis Amplifier, which provides the drive signal to control the intensity level of the display.

DETAILED CIRCUIT DESCRIPTION

Deflection Amplifiers

Vertical Deflection Amplifier. The Vertical Deflection Amplifier provides the final amplification of signals applied to the vertical plug-in units. It produces a push-pull output sufficient to drive the CRT vertical deflection plates. The amplifier consists of Q104, Q106, Q114, and Q116, connected in a differential configuration.

The input signal arrives via P612 from the plug-in interface circuit (power supply/amplifier module). The output signal is developed across the collector-load resistors, R104 and R114, and is about 50 times the magnitude of the input signal. R116, Vert Gain, provides Q106-Q116 emitter degeneration to set the gain of the stage to provide a calibrated vertical display.

Horizontal Deflection Amplifier. The Horizontal Deflection Amplifier consists of Q124, Q126, Q134, and Q136, and is basically the same as the Vertical Deflection Amplifier just described. It provides final amplification of signals from the horizontal plug-in unit, which arrive via P611. Gain of the stage is set by R136, Horiz Gain, to provide a calibrated horizontal display.

Beam Finder. If a high-amplitude signal or a misadjusted control has deflected the trace or display off screen, it can be located by pressing the front-panel BEAM FINDER pushbutton. This opens S125, allowing current through R125 into the emitter circuits of both deflection amplifiers. R125 limits the current available to the transistors, and hence, to the collector-load resistors. Thus the dynamic range of the deflection plates is limited to an on-screen level, and the display is compressed within the viewing area.

Also, when the BEAM FINDER switch is pressed, the Z Axis Amplifier in the CRT Circuit senses the slight increase in voltage level at the R108-R118-R128-R138 junction. The Z Axis Amplifier produces a slight increase in CRT beam intensity, allowing the trace to be displayed even though the INTENSITY control may be fully counterclockwise.

X-Y Phasing. Variable capacitor C115, Phase, is connected across the output collectors of the Vertical Deflection Amplifier. This capacitor is adjusted to eliminate the inherent phase difference between the vertical and horizontal deflection systems when operating in the X-Y mode.

CRT Circuit

General. The CRT Circuit produces the high-voltage potential and provides the control circuits necessary for operation of the cathode-ray tube (CRT). This circuit also includes the Z-Axis Amplifier stage to set the intensity of the CRT display.

Z-Axis Amplifier. The Z-Axis Amplifier is a current driven shunt-feedback operational amplifier with a voltage output, and consists of Q222, Q226, and Q234. The feedback path is from the collectors of Q226 and Q234 through R227-C227 to the base of Q222. Q226 and Q234 are connected as a collector-coupled complementary amplifier to provide a fast, linear output signal while consuming minimum quiescent power. The output voltage provides the drive signal to control the CRT intensity level through the Control-Grid Supply.

The output level of the Z-Axis Amplifier is established by the voltage drop across R227 in reference to virtual ground at the base of Q222 (the operational amplifier summing point). The current through R227 is determined by the input current from any combination of several sources, such as from the front-panel INTENSITY control, plug-in interface (blanking, intensification, etc.), and from Q214. Q214 is an operational amplifier with two inputs; one from the front-panel EXT INTENSITY INPUT connector and the other from the front-panel BEAM FINDER switch. It sets those input signals to a level suitable for proper response by the Z-Axis Amplifier.

High-Voltage Regulator

High-Voltage Primary. A repetitive, non-sinusoidal signal is produced by a phase-modulated switching circuit in the primary of T240 and induced into the secondaries. Current drive for the primary winding is furnished by Q252 in its conduction state. Q252 is turned on by positive-going feedback applied through C259, L259, and R259 from the feedback winding, and then turned off by switching action from Q262. A sample of the output DC voltage is modulated by the AC from another feedback winding at the gate of Q278 to establish the conduction time of Q252 and thus maintain the proper output level. Q252 delivers energy to T240 only once each cycle.

Assuming Q262 and Q264 are off initially, R262 provides base drive for Q252, causing it to deliver current to T240 primary. As Q252 conducts, the increasing current through the primary winding induces a voltage into the secondaries. The gate of Q278 is driven negative by the voltage from the feedback winding, switching Q264 and Q262 on. With conduction of Q262, base drive for Q252 is removed.

With Q252 off, the transformer field collapses, reversing the polarity of the voltage induced into the secondaries. When the gate of Q278 is driven sufficiently positive to switch Q264 and Q262 off, Q252 is switched on again. Q252 again delivers energy to the primary winding and the action is repeated.

High-Voltage Regulation. Regulation is accomplished as follows: Feedback from the −3400-volt cathode supply is summed with low-voltage levels through the voltage divider consisting of resistors R272B-E, R275, and R276 to establish the DC level at the gate of Q278. The AC component, which is the switching signal, is derived from the transformer as described previously. If the output level of the cathode supply drops below the nominal −3400 volts (becomes more positive), the level at the gate of Q278 rises. A new point is selected on the varying AC component to cause switching of Q262-Q264 later and hence increase conduction time of Q252. This allows more energy to be delivered to the primary winding of T240, resulting in an increase of voltage in the secondaries. Conversely, if the output level increases, Q252 is allowed to conduct for a shorter length of time. The DC level at the gate of Q278 is adjusted by R275, H.V. Adj, to set the output at exactly −3400 volts.

High Voltage Outputs

Transformer T240 has two high-voltage output windings which provide the potentials required for the CRT cathode and control grid supplies. The −3400-volt accelerating potential for the cathode is supplied by half-wave rectifier CR247. The cathode heater is elevated to the cathode potential through R273.

Half-wave rectifier CR241 provides about −3450 volts to establish bias voltage on the CRT control grid. This voltage (and hence the CRT beam current) is dynamically controlled by the Z-Axis Amplifier, which contains the INTENSITY control, blanking inputs, and intensification inputs. R245, Int Range, provides a fine adjustment of the quiescent grid voltage to bias the CRT just below cutoff when the Z-Axis Amplifier output is at its minimum quiescent level (INTENSITY control counterclockwise and no intensifying or blanking inputs).

Neon bulbs DS271, DS272, and DS273 provide protection to the CRT if the voltage difference between the control grid and the cathode exceeds about 180 volts.

CRT Control Circuits

In addition to the INTENSITY control discussed previously, front-panel FOCUS and internal astigmatism controls have been incorporated for arriving at an optimum CRT display. FOCUS control R295 provides the correct voltage for the second anode in the CRT. Proper voltage for the third anode is obtained by adjusting Astig control R286. In order to obtain optimum spot size and shape, both the FOCUS and Astig controls are adjusted to provide the proper electrostatic lens configuration in the CRT.

The Geom adjustment R285 varies the positive level on the horizontal deflection plate shields to control the overall geometry of the display. The TRACE ROTATION control, R291, permits adjustment of the DC current through beam-rotation coil L291 to align the display with the horizontal graticule lines.

SECTION 4
CALIBRATION

Change information, if any, affecting this section will be found at the rear of this manual.

Introduction

This section of the manual contains a procedure to return the circuits of the D10 to within their designed operating capabilities. Calibration is generally required after a repair has been made, or after long time intervals in which normal aging of components may affect instrument accuracy. For initial inspection to verify instrument operation, the Basic Operation procedure in Section 2 should be used (the instrument is checked with its covers on, using a minimum of peripheral equipment).

Instrument Maintenance

Before complete calibration, thoroughly clean and inspect this instrument as outlined in the Maintenance section of the Oscilloscope System manual. Also, the system manual contains information for general maintenance of this instrument, including preventive maintenance, component identification and replacement, etc.

Services Available

Tektronix, Inc. provides complete instrument repair and calibration at local Field Service Centers and at the Factory Service Center. Contact your local Tektronix Field Office or representative for further information.

TEST EQUIPMENT REQUIRED

General

The following test equipment and accessories, or the equivalent, is required for complete calibration of the D10. Specifications given for the test equipment are the minimum necessary for accurate calibration. Therefore, some of the specifications listed here may be less rigorous than the actual performance capabilities of the test equipment. All test equipment is assumed to be correctly calibrated and operating within the listed specifications.

Calibration Equipment Alternatives

If other test equipment is substituted, control settings or calibration setup may need altering to meet the requirements of the equipment used. Detailed operating instructions for the test equipment are not given in this procedure. Refer to the instruction manual for the test equipment if more information is needed.

Special Calibration Fixtures

Special Tektronix calibration fixtures are used in this procedure only where they facilitate instrument calibration. These special calibration fixtures are available from Tektronix, Inc. Order by part number through your local Tektornix Field Office or representative.

Test Instruments

1. Vertical plug-in unit. Any two Tektronix 5A-series amplifiers can be used. The units should be of the same type for checking X-Y phase relationship.

2. Time-base plug-in unit. Tektronix 5B10N recommended.

3. DC voltmeter. Minimum sensitivity rating, 3500 volts full scale with an accuracy of at least 3%.

4. Low-frequency sine-wave generator. Frequency, 2 kilohertz to at least 100 kilohertz; output amplitude, from about 0.1 volt to 20 volts peak to peak into 50 ohms. For example, General Radio 1310-B Oscillator (use a General Radio 274-QBJ Adapter to provide BNC output).

5. Standard amplitude calibrator. Frequency, about one kilohertz; square-wave output amplitude, 0.2 volt. DC voltage outputs, + and –5 volts for checking Z-Axis input. Tektronix Calibration Fixture 067-0502-01 has all of these requirements.

Accessories

1. Coaxial cable. 50 ohms impedance, 42-inch length, BNC connectors. Tektronix Part No. 012-0057-01.

2. Dual-input cable. Provides matched signal paths to the X and Y channels; BNC connectors. Tektronix Part No. 067-0525-00.

3. Test lead to connect signal from the CALIBRATOR loop to the vertical input.

SHORT-FORM PROCEDURE AND INDEX

D10 Serial No. _____

Calibration Date _____

Calibrated By _____

1. Check/Adjust Power Supplies Page 4-3

   Low-Voltage Supplies: Check that each supply is within the tolerance listed in Table 4-1.

   High-Voltage Supply: Meter reading between HV test point and ground is −3400 V, ±170 V. Adjust R275.

2. Check/Adjust CRT Operation Page 4-3

   Intensity Range: Adjust R245 to establish proper CRT bias.

   Astigmatism: Adjust R286 for sharp display.

   Trace Alignment: Adjust TRACE ROTATION to align the trace parallel to the center graticule line.

   Geometry: Adjust R285 for minimum curvature of traces at screen edges.

3. Check/Adjust CRT Deflection System Page 4-4

   Horizontal Centering/Sweep Magnification: Adjust R675 to establish horizontal electrical zero at the screen center.

   Vertical and Horizontal Amplifier Gain: Adjust R116 and R136 to provide calibrated deflection factor.

   X-Y Phasing: Check that phase difference between identical amplifier units is 1° or less. Adjust C115.

4. Check Z Axis Amplifier Page 4-5

   External Intensity Input: +5 V turns the CRT on from an off level; −5 V turns CRT off from an on level.

   Beam Finder: Trace can be located.

5. Check Calibrator Loop Page 4-5

   Amplitude and Frequency: Output amplitude is 400 mV, ±1%; frequency is twice the power-line frequency.

CALIBRATION PROCEDURE

Preparation

NOTE

This instrument should be adjusted at an ambient temperature between +20°C and +30°C (between +68°F and +86°F) for best overall accuracy.

1. The D10 is operated with a 5100-series Power Supply/Amplifier unit, forming an oscilloscope mainframe. Remove the right side and bottom cabinet panels.

2. Insert an amplifier plug-in unit in each vertical plug-in compartment (left and center). Insert a time-base plug-in unit in the horizontal (right) compartment.

3. Connect the oscilloscope to the power source for which it is wired.

4. Set the controls as given under Initial Control Settings. Refer to Fig. 4-1 for location of internal adjustments and test points.

Initial Control Settings

NOTE

Do not preset internal controls unless they are known to be significantly out of adjustment, or unless repairs have been made in the circuit. In these instances, the particular controls can be set to midrange.

D10

INTENSITY	Counterclockwise
FOCUS	Midrange
POWER	ON

Amplifier Units (both)

Display	On
Position	Midrange
Volts/Div	50 mV
Variable	Calibrated (fully clockwise)
Input Coupling	DC, GND

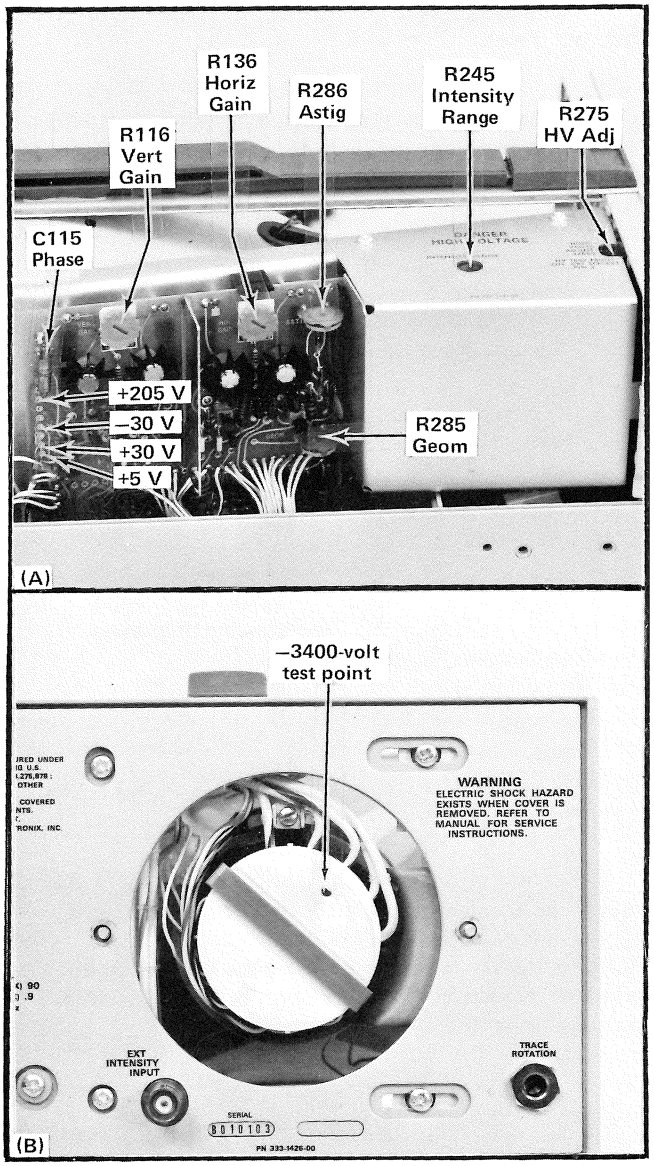

Fig. 4-1. Location of controls and test points.

Time Base Unit

Display	Alt (button out)
Position	Sweep starts at the left edge of the graticule
Seconds/Div	0.5 ms
Variable	Calibrated (fully clockwise)
Swp Mag	Off (button out)
Triggering Mode	Auto Trig, AC Coupling, + Slope
Triggering Source	Display (Left and Right buttons in)
Triggering Level	Midrange

1. Check/Adjust Power Supplies

LOW-VOLTAGE SUPPLIES

a. Connect the DC voltmeter between each low-voltage test point and ground. See Fig. 4-1 for test point locations.

b. CHECK—Each supply is within the tolerance listed in Table 4-1.

NOTE

The tolerances in Table 4-1 include the possible 3% measurement error of the VOM. If a supply is outside the listed tolerance, refer to the Calibration section of the 5100-series Oscilloscope System manual for complete calibration instructions.

TABLE 4-1

Supply	Tolerance
–30 V	–29.025 V to –30.975 V
+5 V	+4.75 V to +5.25 V
+30 V	+28.95 V to +31.07 V
+205 V	+175 V to +247.5 V

HIGH VOLTAGE SUPPLY

CAUTION

Turn off instrument power when connecting and disconnecting the DC voltmeter.

c. Connect the DC voltmeter (20 kΩ/volt VOM set to measure at least –3500 volts) between ground and the –3400-volt test point.

d. CHECK—Meter reading must be –3400 volts, ±170 volts.

ADJUST—R275, HV Adj, for –3400 volts.

e. Disconnect the DC voltmeter.

2. Check/Adjust CRT Operation

If you are beginning calibration with this step, set the front-panel controls as listed under Initial Control Settings except as follows:

Right Vertical
Plug-in Display — Off (button out)

INTENSITY RANGE

a. Advance the INTENSITY control clockwise and check that a trace can be obtained, then turn the control fully counterclockwise.

b. ADJUST—Obtain a trace by setting R245, Intensity Range, fully counterclockwise. Then press the BEAM FINDER button and slowly adjust R245 clockwise until the trace just disappears. Release the BEAM FINDER button and adjust the INTENSITY control for a trace of normal brightness.

ASTIGMATISM

c. Connect the low-frequency sine-wave generator to the left vertical plug-in unit input connector through a coaxial cable. Set the sine-wave generator for a 2-kilohertz, minimum amplitude output.

d. Set the input coupling switch of the left vertical unit to DC and adjust the sine-wave generator for about 6 divisions of display amplitude. Adjust the time-base triggering controls for a stable display.

e. ADJUST—R286, Astig, and front-panel FOCUS control for best focus of overall display.

f. Disconnect the sine-wave signal from the vertical input connector.

TRACE ALIGNMENT

g. Move the trace to the center of the graticule (left plug-in unit Position control).

h. CHECK—Trace should be parallel to the center graticule line.

ADJUST—TRACE ROTATION control (rear-panel screwdriver adjustment) to align the trace horizontally.

GEOMETRY

i. Press in the Display On button of the right vertical plug-in unit to obtain a two-trace display. Position one of the traces to the top of the graticule and the other trace to the bottom.

j. CHECK—Bowing of the traces must not exceed 0.1 division.

ADJUST—R285, Geom, for minimum curvature of the two traces.

k. Interchange the time-base plug-in unit with either of the amplifier plug-in units to obtain a vertical sweep. Position the vertical trace to the right edge of the graticule. Readjust R285 if the bowing exceeds 0.1 division.

l. Replace the time-base plug-in unit in the horizontal compartment and the amplifier unit in the vertical compartment. Recheck horizontal geometry.

3. Check/Adjust CRT Deflection System

If you are beginning calibration with this step, set the front-panel controls as listed under Initial Control Settings, except as follows:

INTENSITY	Adjust for normal viewing brightness.
Input Coupling (both vertical plug-ins)	DC

HORIZONTAL CENTERING/SWEEP MAGNIFIER REGISTRATION

a. Set the standard amplitude calibrator for a 0.2-volt square wave and connect its output to the input connector of the left vertical plug-in unit through a coaxial cable. Position the rising edge of one of the square waves to the graticule center vertical line and push in the Swp Mag button on the time-base unit.

b. CHECK—The corresponding rising edge on the magnified sweep must be within two divisions of the graticule center.

ADJUST—While switching between magnified and unmagnified displays, alternately adjust R675, Horiz Cent (see Fig. 5-1 in the 5103N Oscilloscope System manual for location), and the horizontal Position control until the rising edge of both the unmagnified and magnified displays are at the graticule center.

VERTICAL AND HORIZONTAL AMPLIFIER GAIN

c. Temporarily disconnect the calibrator signal and remove the time-base unit from the oscilloscope mainframe. Move one of the amplifier units to the horizontal compartment, then reconnect the 0.2-volt calibrator signal through a dual-input cable to the input connectors of both amplifier units.

NOTE

Use two amplifier plug-ins known to be accurately calibrated, or verify their correct calibration by applying a known signal and measuring the differential output at pins A7 and B7 of the plug-in connector. The deflection factor at the output is 50 millivolts/division.

d. Set the input coupling of the amplifier unit in the horizontal compartment to DC. The display should be two dots joined by a diagonal line. The dots represent opposite corners of a square having sides 4 divisions in length. Adjust the Position controls to center the display.

e. CHECK—Vertical and horizontal deflection is 4 divisions, ±0.04 division.

ADJUST—R116, Vert Gain, and R136, Horiz Gain, so the vertical and horizontal deflection are each exactly 4 divisions.

X-Y PHASING

f. Set the low-frequency sine-wave generator for a 100-kilohertz, minimum amplitude output. Move the coaxial cable from the standard amplitude calibrator output to the sine-wave generator output to apply the sine-wave signal to the amplifier plug-in units.

g. Adjust the vertical and horizontal Position controls to center the diagonal display, then increase the sine-wave generator amplitude until the display is 6 divisions vertically and horizontally.

h. CHECK—The opening of the loop measured on the graticule center line is 0.07 division or less. This indicates a phase difference of 1° or less between the vertical and horizontal deflection systems.

ADJUST—C115, Phase, for minimum loop opening (a straight line) in the diagonal display.

i. Remove the low-frequency sine-wave generator. Move the amplifier unit back to the vertical compartment and re-install the time-base unit.

BANDWIDTH

The requirement of the deflection amplifiers with respect to bandwidth is that the response is sufficient to pass a signal from any 5A-series plug-in unit. To verify system bandwidth, refer to the calibration sections of the individual plug-in unit manuals.

4. Check Z Axis Amplifier

Set the front-panel controls as listed under Initial Control Settings, except as follows:

INTENSITY	Adjust for normal brightness.

EXTERNAL INTENSITY INPUT

a. Turn the INTENSITY control until the traces cannot be seen, but not fully counterclockwise.

b. Connect the standard amplitude calibrator output to the EXT INTENSITY INPUT connector. Set the standard amplitude calibrator for a +5-volt DC output.

c. CHECK—Traces of normal brightness are displayed.

d. Disconnect the calibrator signal and adjust the INTENSITY control for traces of normal brightness. Set the standard amplitude calibrator for a −5-volt DC output and reconnect the cable to the EXT INTENSITY INPUT connector.

e. CHECK—The traces are not visible.

f. Remove the standard amplitude calibrator.

BEAM FINDER

g. Press the BEAM FINDER button and observe that the traces brighten slightly and compress into the graticule area.

h. CHECK—While holding the BEAM FINDER button in, neither trace can be positioned off screen.

i. Reposition the traces as desired and release the BEAM FINDER.

5. Check Calibrator Loop

Set the front-panel controls as listed under Initial Control Settings, except as follows:

INTENSITY	Adjust for normal brightness.
Left Vertical Plug-in	
Volts/Div	.1
Input Coupling	DC
Right Vertical Plug-in	
Display	Off

a. Connect the front-panel CALIBRATOR loop to the left vertical plug-in unit input connector using a test lead. Adjust the time-base unit to trigger on the calibrator signal and set the Seconds/Div switch to display a few cycles of the waveform.

b. CHECK—Display amplitude is 4 divisions, ±0.04 division (400 millivolts, ±1%). Frequency of the calibrator signal is twice the power-line frequency, which can be determined by measuring the length of time for two cycles of display and taking the reciprocal.

c. Disconnect all test equipment.

This completes the calibration procedure for the D10.

PARTS LIST ABBREVIATIONS

BHB	binding head brass
BHS	binding head steel
cap.	capacitor
cer	ceramic
comp	composition
conn	connector
CRT	cathode-ray tube
csk	countersunk
DE	double end
dia	diameter
div	division
elect.	electrolytic
EMC	electrolytic, metal cased
EMT	electrolytic, metal tubular
ext	external
F & I	focus and intensity
FHB	flat head brass
FHS	flat head steel
Fil HB	fillister head brass
Fil HS	fillister head steel
h	height or high
hex.	hexagonal
HHB	hex head brass
HHS	hex head steel
HSB	hex socket brass
HSS	hex socket steel
ID	inside diameter
inc	incandescent
int	internal
lg	length or long
met.	metal
mtg hdw	mounting hardware
OD	outside diameter
OHB	oval head brass
OHS	oval head steel
P/O	part of
PHB	pan head brass
PHS	pan head steel
plstc	plastic
PMC	paper, metal cased
poly	polystyrene
prec	precision
PT	paper, tubular
PTM	paper or plastic, tubular, molded
RHB	round head brass
RHS	round head steel
SE	single end
SN or S/N	serial number
S or SW	switch
TC	temperature compensated
THB	truss head brass
thk	thick
THS	truss head steel
tub.	tubular
var	variable
w	wide or width
WW	wire-wound

PARTS ORDERING INFORMATION

Replacement parts are available from or through your local Tektronix, Inc. Field Office or representative.

Changes to Tektronix instruments are sometimes made to accommodate improved components as they become available, and to give you the benefit of the latest circuit improvements developed in our engineering department. It is therefore important, when ordering parts, to include the following information in your order: Part number, instrument type or number, serial or model number, and modification number if applicable.

If a part you have ordered has been replaced with a new or improved part, your local Tektronix, Inc. Field Office or representative will contact you concerning any change in part number.

SPECIAL NOTES AND SYMBOLS

×000	Part first added at this serial number
00×	Part removed after this serial number
*000-0000-00	Asterisk preceding Tektronix Part Number indicates manufactured by or for Tektronix, Inc., or reworked or checked components.
Use 000-0000-00	Part number indicated is direct replacement.

SECTION 5
ELECTRICAL PARTS LIST

Values are fixed unless marked Variable.

Ckt. No.	Tektronix Part No.	Serial/Model No. Eff	Disc	Description		
				CHASSIS		
				Fuse		
F201	159-0003-00			1.6 A	3AG	Slo-Blo (Domestic)
F201	159-0019-00			1 A	3AG	Slo-Blo (Export)
				Connector		
J210	131-0955-00			BNC, receptacle, electrical		
				Inductor		
L291	*108-0644-00			Trace Rotation		
				Resistors		
Resistors are fixed, composition, ±10% unless otherwise indicated.						
R200	311-1160-00			100 kΩ, Var		
R291	311-1189-00			5 kΩ, Var		
R295	311-0254-00			5 MΩ, Var		
				Switches		
S125	260-1238-00			Push		BEAM FINDER
S200	260-0227-00			Thermo cut-out	165°	
S201	260-1222-00			Push-pull		POWER
				Electron Tube		
V291	*154-0633-00			CRT Standard Phosphor		

Ckt. No.	Tektronix Part No.	Serial/Model No. Eff	Disc	Description			
				A1 HIGH VOLTAGE Circuit Board Assembly			
	*670-1433-00			Complete Board			
				Capacitors			
Tolerance ±20% unless otherwise indicated.							
C106	283-0684-00			620 pF	Mica	300 V	2%
C115	281-0027-00			0.7-3 pF, Var	Tub.		
C116	283-0598-00			253 pf	Mica	300 V	5%
C126	283-0596-00			528 pF	Mica	300 V	1%
C136	283-0672-00			200 pF	Mica	500 V	1%
C224	283-0065-00			0.001 μF	Cer	100 V	5%
C227	280-0537-00			0.68 pF	Cer	500 V	
C236	285-0526-00			0.1 μF	MT	400 V	
C241	283-0270-00			0.0068 μF	Cer	4000 V	+80%-20%
C242	283-0261-00			0.01 μF	Cer	4000 V	
C248	283-0270-00			0.0068 μF	Cer	4000 V	+80%-2-%
C249	283-0270-00			0.0068 μF	Cer	4000 V	+80%-20%
C251	290-0194-00			10 μF	Elect.	100 V	
C252	283-0617-00			4700 pF	Cer	300 V	10%
C253	283-0003-00			0.01 μF	Cer	150 V	
C254	283-0059-00			1 μF	Cer	25 V	+80%-20%
C258	283-0059-01			1 μF	Cer	25 V	+80%-20%
C259	283-0198-01			0.22 μF	Cer	50 V	
C272	283-0021-00			0.001 μF	Cer	5000 V	
C273	283-0208-01			0.22 μF	Cer	200 V	
C274	283-0104-02			0.002 μF	Cer	500 V	5%
C279	283-0065-00			0.001 μF	Cer	100 V	5%
C281	283-0003-00			0.01 μF	Cer	150 V	
				Semiconductor Device, Diodes			
CR209	*152-0061-00			Silicon	Tek Spec		
CR211	*152-0061-00			Silicon	Tek Spec		
CR214	*152-0185-00			Silicon	Replaceable by 1N4152		
CR215	*152-0061-00			Silicon	Tek Spec		

A1 HIGH VOLTAGE Circuit Board Assembly (cont)

Ckt. No.	Tektronix Part No.	Serial/Model No. Eff	Disc	Description
				Semiconductor Device, Diodes (cont)
CR224	*152-0061-00			Silicon Tek Spec
CR239	*152-0061-00			Silicon Tek Spec
CR241	152-0409-00			Silicon Rectifier, fast recovery, 12,000 V, 5 mA
CR247	152-0409-00			Silicon Rectifier, fast recovery, 12,000 V, 5 mA
CR256	*152-0061-00			Silicon Tek Spec
CR259	*152-0185-00			Silicon Replaceable by 1N4152
CR264	*152-0185-00			Silicon Replaceable by 1N4152
CR269	*152-0061-00			Silicon Tek Spec
VR237	151-0283-00			Zener 1N976B 400 mW, 43 V, 5%
VR258	152-0438-00			Zener 750 mW, 9.1 V, 5%
VR281	152-0357-00			Zener 1N983B 400 mW, 82 V, 5%
VR282	152-0255-00			Zener 1N978B 400 mW, 51 V, 5%
				Bulbs
DS271	150-0030-00			Neon NE 2V GE
DS272	150-0030-00			Neon NE 2V GE
DS73	150-0030-00			Neon NE 2V GE
				Inductor
L259	*108-0564-00			75 μH
				Transistors
Q104	151-0279-00			Silicon NPN TO-39 SE7056
Q106	151-0190-02			Silicon NPN TO-92 2N3904
Q114	151-0279-00			Silicon NPN TO-39 SE7056
Q116	151-0190-02			Silicon NPN TO-92 2N3904
Q124	151-0279-00			Silicon NPN TO-39 SE7056
Q126	151-0190-02			Silicon NPN TO-92 2N3904
Q134	151-0279-00			Silicon NPN TO-39 SE7056
Q136	151-0190-02			Silicon NPN TO-92 2N3904
Q214	151-0341-00			Silicon NPN TO-106 2N3565
Q222	151-0190-02			Silicon NPN TO-92 2N3904
Q226	151-0179-00			Silicon NPN TO-18 2N3877A
Q234	*151-0228-00			Silicon PNP TO-5 Tek Spec

A1 HIGH VOLTAGE Circuit Board Assembly (cont)

Ckt. No.	Tektronix Part No.	Serial/Model No. Eff	Disc	Description				
				Transistors (cont)				
Q252	*151-0256-00			Silicon	NPN	TO-3	Tek Spec	
Q262	151-0207-00			Silicon	NPN	TO-98	2N3415	
Q264	151-0342-00			Silicon	PNP	TO-106	2N4249	
Q278	151-1005-00			Silicon	FET	TO-18	N Channel, junction type	
				Resistors				
Resistors are fixed, composition, ±10% unless otherwise indicated.								
R101	315-0101-00			100 Ω	1/4 W			5%
R102	316-0470-00			47 Ω	1/4 W			
R104	308-0668-00			6.2 kΩ	7 W		WW	3%
R106	321-0128-00			210 Ω	1/8 W		Prec	1%
R108	308-0539-00			2.25 kΩ	3 W		WW	1/2%
R112	316-0470-00			47 Ω	1/4 W			
R114	308-0668-00			6.2 kΩ	7 W		WW	3%
R116	311-1132-00			100 Ω, Var				
R118	308-0539-00			2.25 kΩ	3 W		WW	1/2%
R122	316-0470-00			47 Ω	1/4 W			
R124	308-0668-00			6.2 kΩ	7 W		WW	3%
R125	303-0751-00			750 Ω	1 W			5%
R126	321-0128-00			210 Ω	1/8 W		Prec	1%
R128	308-0539-00			2.25 kΩ	3 W		WW	1/2%
R132	316-0470-00			47 Ω	1/4 W			
R134	308-0668-00			6.2 kΩ	7 W		WW	3%
R136	311-1132-00			100 Ω, Var				
R138	308-0539-00			2.25 kΩ	3 W		WW	1/2%
R202	315-0563-00			56 kΩ	1/4 W			5%
R203	316-0103-00			10 kΩ	1/4 W			5%
R206	315-0682-00			6.8 kΩ	1/4 W			5%
R207	316-0822-00			8.2 kΩ	1/4 W			
R208	316-0473-00			47 kΩ	1/4 W			
R211	316-0103-00			10 kΩ	1/4 W			
R213	315-0623-00			62 kΩ	1/4 W			5%

A1 HIGH VOLTAGE Circuit Board Assembly (cont)

Ckt. No.	Tektronix Part No.	Serial/Model No. Eff	Disc	Description		
			Resistors (cont)			
R215	315-0103-00		10 kΩ	1/4 W		5%
R216	315-0153-00		15 kΩ	1/4 W		5%
R217	315-0103-00		10 kΩ	1/4 W		5%
R218	316-0183-00		18 kΩ	1/4 W		
R219	315-0683-00		68 kΩ	1/4 W		5%
R222	316-0102-00		1 kΩ	1/4 W		
R223	316-0472-00		4.7 kΩ	1/4 W		
R227	321-0399-00		140 kΩ	1/8 W	Prec	1%
R231	316-0472-00		4.7 kΩ	1/4 W		
R232	316-0274-00		270 kΩ	1/4 W		
R234	304-0223-00		22 kΩ	1 W		
R236	315-0101-00		100 Ω	1/4 W		5%
R239	315-0101-00		100 Ω	1/4 W		5%
R242	316-0223-00		22 kΩ	1/4 W		
R243	316-0105-00		1 MΩ	1/4 W		
R245	311-1135-00		1 MΩ, Var			
R248	316-0223-00		22 kΩ	1/4 W		
R251	307-0058-00		5.6 Ω	1/2 W		5%
R252	308-0075-00		100 Ω	3 W	WW	5%
R254	308-0690-00		3 Ω	3 W	WW	
R257	306-0104-00		100 kΩ	2 W		
R262	302-0472-00		4.7 kΩ	1/2 W		
R263	316-0183-00		18 kΩ	1/4 W		
R266	316-0334-00		330 kΩ	1/4 W		
R267	316-0333-00		33 kΩ	1/4 W		
R268	316-0103-00		10 kΩ	1/4 W		
R269	315-0101-00		100 Ω	1/4 W		5%
R271	316-0395-00		3.9 MΩ	1/4 W		
R272A			40 MΩ			
R272B			150 kΩ			
R272C	*307-0296-00		13 MΩ	Thick film		
R272D			4 MΩ			
R272E			2.2 MΩ			

A1 HIGH VOLTAGE Circuit Board Assembly (cont)

Ckt. No.	Tektronix Part No.	Serial/Model No. Eff	Disc	Description		
				Resistors (cont)		
R273	315-0104-00			100 kΩ	1/4 W	5%
R274	316-0105-00			1 MΩ	1/4 W	
R275	311-1136-00			100 kΩ, Var		
R276	316-0105-00			1 MΩ	1/4 W	
R278	316-0562-00			5.6 kΩ	1/4 W	
R279	315-0104-00			100 kΩ	1/4 W	5%
R282	315-0163-00			16 kΩ	1/4 W	5%
R285	311-1136-00			100 kΩ, Var		
R286	311-1136-00			100 kΩ, Var		
R287	301-0183-00			18 kΩ	1/2 W	5%
				Transformer		
T240	*120-0705-00			HV Power		
		A2 AUXILIARY Circuit Board Assembly				
	*670-1454-00			Complete Board		
				Capacitors		
Tolerance ±20% unless otherwise indicated.						
C712	283-0000-00			0.001 μF	Cer	500 V
C714	281-0628-00			15 pF	Cer	600 V 5%
C716	281-0628-00			15 pF	Cer	600 V 5%
C721	281-0628-00			15 pF	Cer	600 V 5%
				Semiconductor Device, Diodes		
CR702	*152-0185-00			Silicon	Replaceable by 1N4152	
CR704	*152-0185-00			Silicon	Replaceable by 1N4152	
CR712	*152-0185-00			Silicon	Replaceable by 1N4152	
CR714	*152-0185-00			Silicon	Replaceable by 1N4152	
CR721	*152-0185-00			Silicon	Replaceable by 1N4152	
CR722	*152-0185-00			Silicon	Replaceable by 1N4152	
VR720	152-0149-00			Zener	1N961B	400 mW, 10 V, 5%

A2 AUXILIARY Circuit Board Assembly (cont)

Ckt. No.	Tektronix Part No.	Serial/Model No. Eff	Disc	Description			
				Transistors			
Q701	151-0341-00			Silicon	NPN	TO-106	2N3565
Q702	151-1005-00			Silicon	FET	TO-18	N Channel, junction type
Q703	151-0341-00			Silicon	NPN	TO-106	2N3565
Q704	151-1005-00			Silicon	FET	TO-18	N Channel, junction type
Q711	151-0341-00			Silicon	NPN	TO-106	2N3565
Q712	151-1005-00			Silicon	FET	TO-18	N Channel, junction type
Q713	151-0341-00			Silicon	NPN	TO-106	2N3565
Q714	151-1005-00			Silicon	FET	TO-18	N Channel, junction type
Q721	*151-0192-00			Silicon	NPN	TO-92	Replaceable by MPS 6521
Q722	*151-0192-00			Silicon	NPN	TO-92	Replaceable by MPS 6521

Resistors

Resistors are fixed, composition, ±10% unless otherwise indicated.

R701	316-0103-00			10 kΩ	1/4 W		
R702	316-0103-00			10 kΩ	1/4 W		
R703	316-0103-00			10 kΩ	1/4 W		
R704	316-0103-00			10 kΩ	1/4 W		
R706	316-0103-00			10 kΩ	1/4 W		
R707	316-0103-00			10 kΩ	1/4 W		
R709	316-0103-00			10 kΩ	1/4 W		
R710	316-0103-00			10 kΩ	1/4 W		
R712	316-0472-00			4.7 kΩ	1/4 W		
R713	316-0332-00			3.3 kΩ	1/4 W		
R715	321-0402-00			150 kΩ	1/8 W	Prec	1%
R716	321-0356-00			49.9 kΩ	1/8 W	Prec	1%
R717	321-0350-00			43.2 kΩ	1/8 W	Prec	1%
R718	316-0153-00			15 kΩ	1/4 W		
R720	321-0385-00			100 kΩ	1/8 W	Prec	1%
R721	321-0356-00			49.9 kΩ	1/8 W	Prec	1%
R722	321-0365-00			61.9 kΩ	1/8 W	Prec	1%
R723	316-0153-00			15 kΩ	1/4 W		
R724	316-0272-00			2.7 kΩ	1/4 W		

SECTION 6

DIAGRAMS AND CIRCUIT BOARD ILLUSTRATIONS

Symbols and Reference Designators

Electrical components shown on the diagrams are in the following units unless noted otherwise:

Capacitors =	Values one or greater are in picofarads (pF). Values less than one are in microfarads (μF).
Resistors =	Ohms (Ω)

Symbols used on the diagrams are based on USA Standard Y32.2-1967.

Logic symbology is based on MIL-STD-806B in terms of positive logic. Logic symbols depict the logic function performed and may differ from the manufacturer's data.

The following special symbols are used on the diagrams:

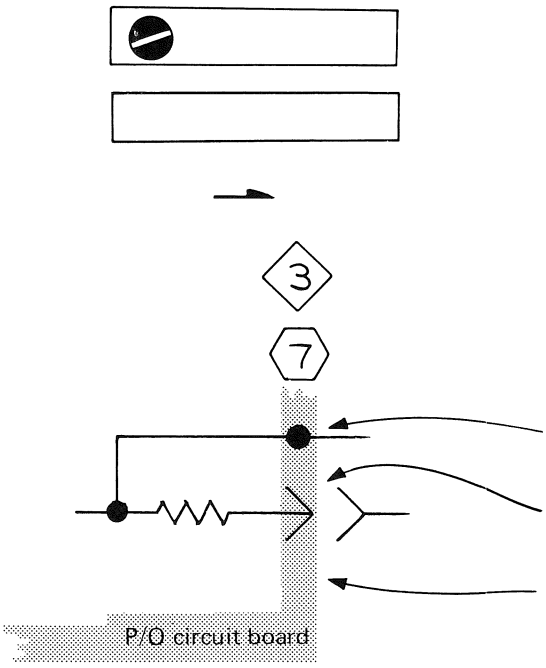

External Screwdriver adjustment.

External control or connector.

Clockwise control rotation in direction of arrow.

Refer to diagram number indicated in diamond.

Refer to waveform number indicated in hexagon.

Connection soldered to circuit board.

Connection made to circuit board with interconnecting pin.

Blue tint encloses components located on circuit board.

The following prefix letters are used as reference designators to identify components or assemblies on the diagrams.

A	Assembly, separable or repairable (circuit board, etc.)
AT	Attenuator, fixed or variable
B	Motor
BT	Battery
C	Capacitor, fixed or variable
CR	Diode, signal or rectifier
DL	Delay line
DS	Indicating device (lamp)
F	Fuse
FL	Filter
H	Heat dissipating device (heat sink, heat radiator, etc.)
HR	Heater
J	Connector, stationary portion
K	Relay
L	Inductor, fixed or variable
LR	Inductor/resistor combination
M	Meter
Q	Transistor or silicon-controlled rectifier
P	Connector, movable portion
R	Resistor, fixed or variable
RT	Thermistor
S	Switch
T	Transformer
TP	Test point
U	Assembly, inseparable or non-repairable (integrated circuit, etc.)
V	Electron tube
VR	Voltage regulator (zener diode, etc.)
Y	Crystal

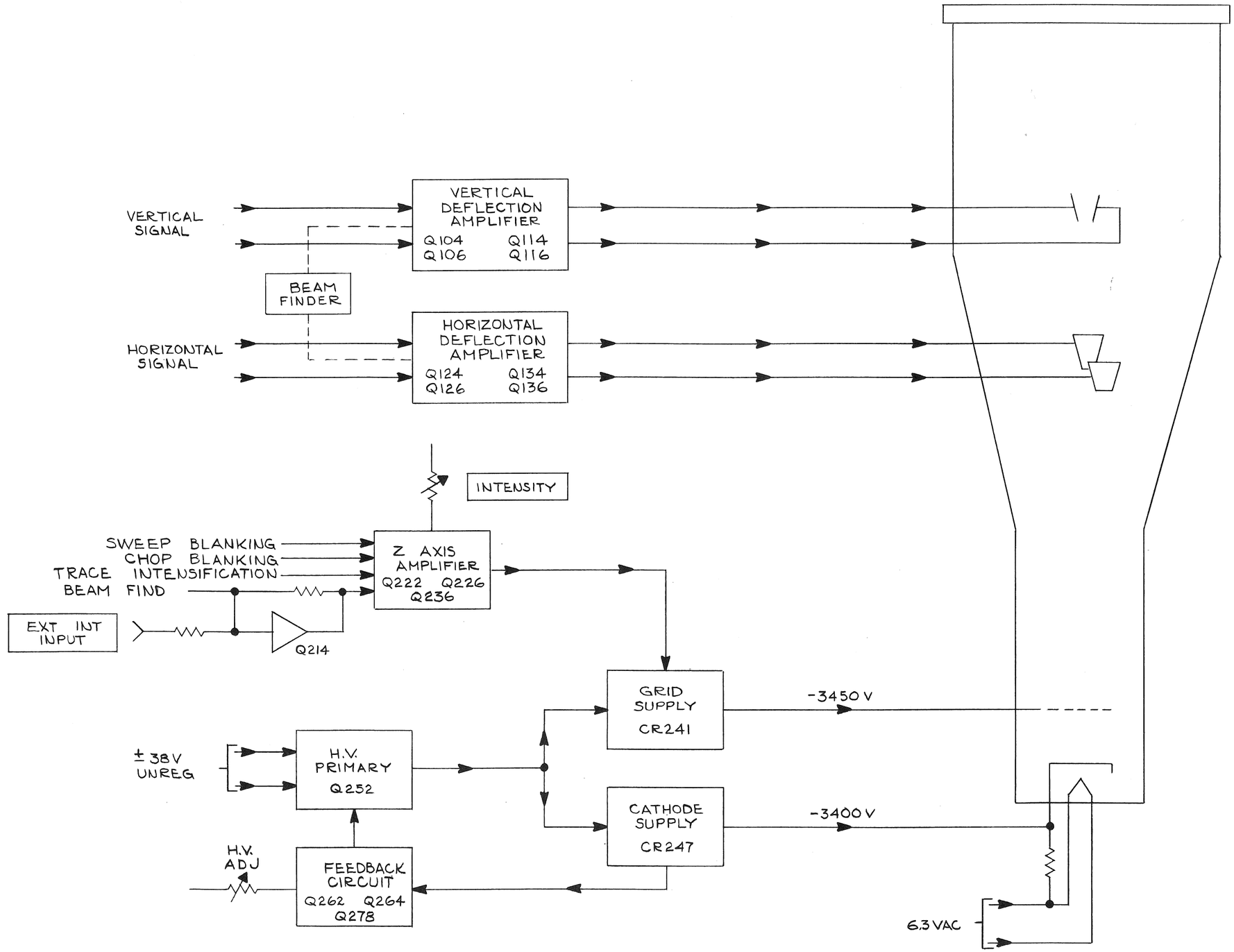

571
RHL

D10

Ⓐ

BLOCK DIAGRAM

BLOCK DIAGRAM

DEFLECTION AMPLIFIER/HIGH-VOLTAGE BOARD
PARTS LOCATION GRID

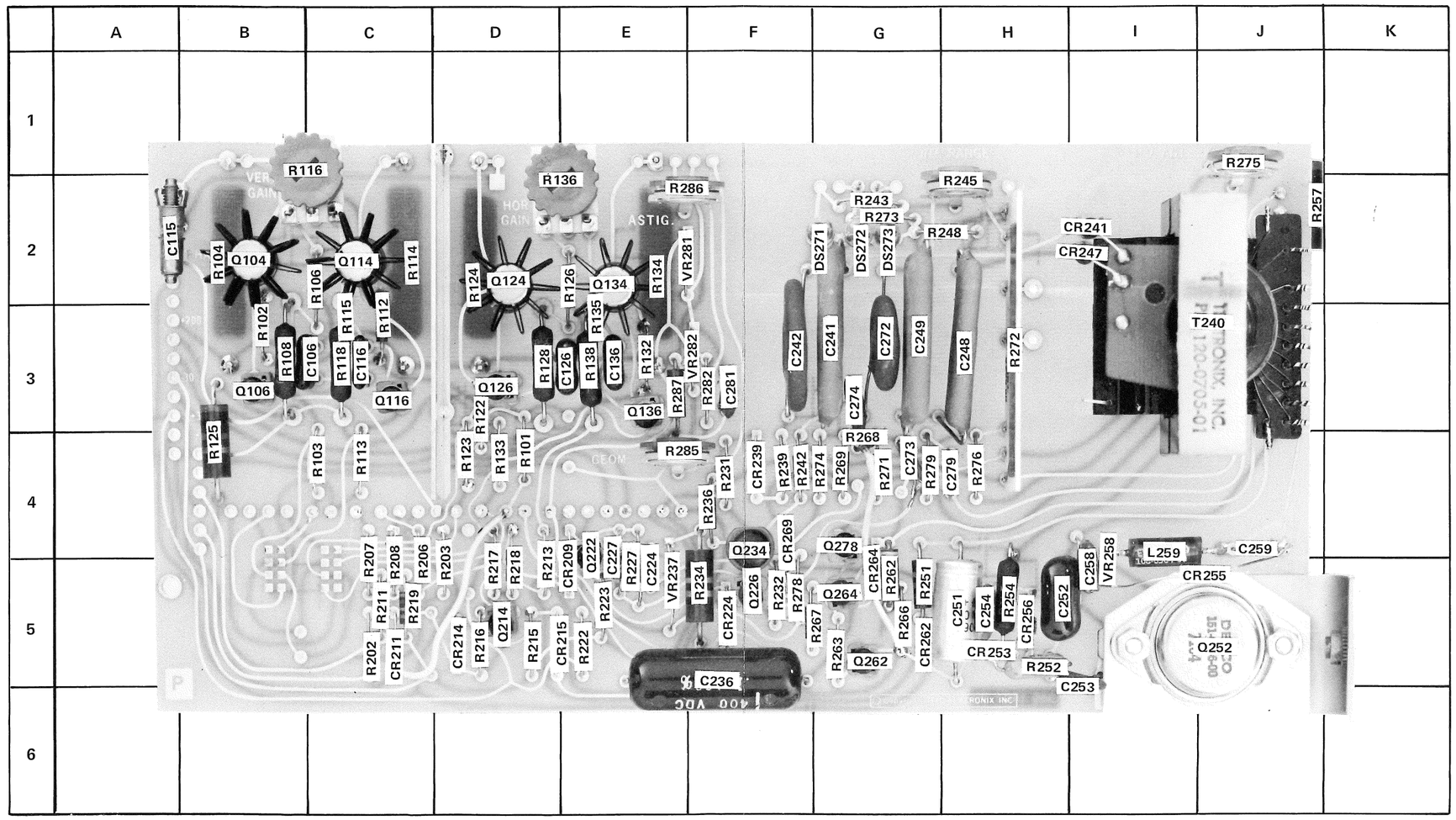

CKT NO	GRID LOC	CKT NO	GRID LOC	CKT NO	GRID LOC	CKT NO	GRID LOC	CKT NO	GRID LOC	CKT NO	GRID LOC	CKT NO	GRID LOC
C106	B-3	C251	H-5	CR209	E-5	CR262	G-5	VR237	E-5	DS271	G-2	L259	I-4
C115	A-2	C252	H-5	CR211	C-5	CR264	G-5	VR258	I-5	DS272	G-2		
C116	C-3	C253	I-5	CR214	D-5	CR269	F-4	VR281	F-3	DS273	G-2		
C126	E-3	C254	H-5	CR215	D-5			VR282	F-3				
C136	E-3	C258	I-5	CR224	F-5								
C224	E-5	C259	J-4	CR239	F-4								
C227	E-5	C272	G-3	CR241	I-2								
C236	F-5	C273	G-4	CR247	I-2								
C241	G-3	C274	G-3	CR252	H-5								
C242	F-3	C279	H-4	CR253	H-5								
C248	H-3	C281	F-3	CR255	J-4								
C249	G-3			CR256	H-5								

CKT NO	GRID LOC	CKT NO	GRID LOC	CKT NO	GRID LOC	CKT NO	GRID LOC	CKT NO	GRID LOC	CKT NO	GRID LOC	CKT NO	GRID LOC
Q104	B-2	Q252	J-5	R101	D-4	R122	D-3	R202	C-5	R222	E-5	R251	G-5
Q106	B-3	Q262	G-5	R102	B-3	R123	D-4	R203	D-5	R223	E-5	R252	H-5
Q114	C-2	Q264	G-5	R103	C-4	R124	D-2	R206	C-5	R227	E-5	R254	H-5
Q116	C-3	Q278	G-4	R104	B-2	R125	B-4	R207	C-5	R231	F-4	R257	J-2
Q124	D-2			R106	C-2	R126	E-2	R208	C-5	R232	F-5	R262	G-5
Q126	D-3			R108	B-3	R128	D-3	R211	C-5	R234	F-5	R263	G-5
Q134	E-2			R112	C-3	R132	E-3	R213	D-5	R236	F-4	R266	G-5
Q136	E-3			R113	C-4	R133	D-4	R215	D-5	R239	F-4	R267	G-5
Q214	D-5			R114	C-2	R134	E-2	R216	D-5	R242	F-4	R268	G-4
Q222	E-5			R115	C-3	R135	E-3	R217	D-5	R243	G-2	R269	G-4
Q226	F-5			R116	B-1	R136	E-2	R218	D-5	R245	H-2	R271	G-4
Q234	F-4			R118	C-3	R138	E-3	R219	C-5	R248	H-2	R272	H-3

CKT NO	GRID LOC
R273	G-2
R274	F-4
R275	J-1
R276	H-4
R278	F-5
R279	G-4
R282	F-3
R285	E-4
R286	E-2
R287	E-3
T240	J-3

Ⓐ

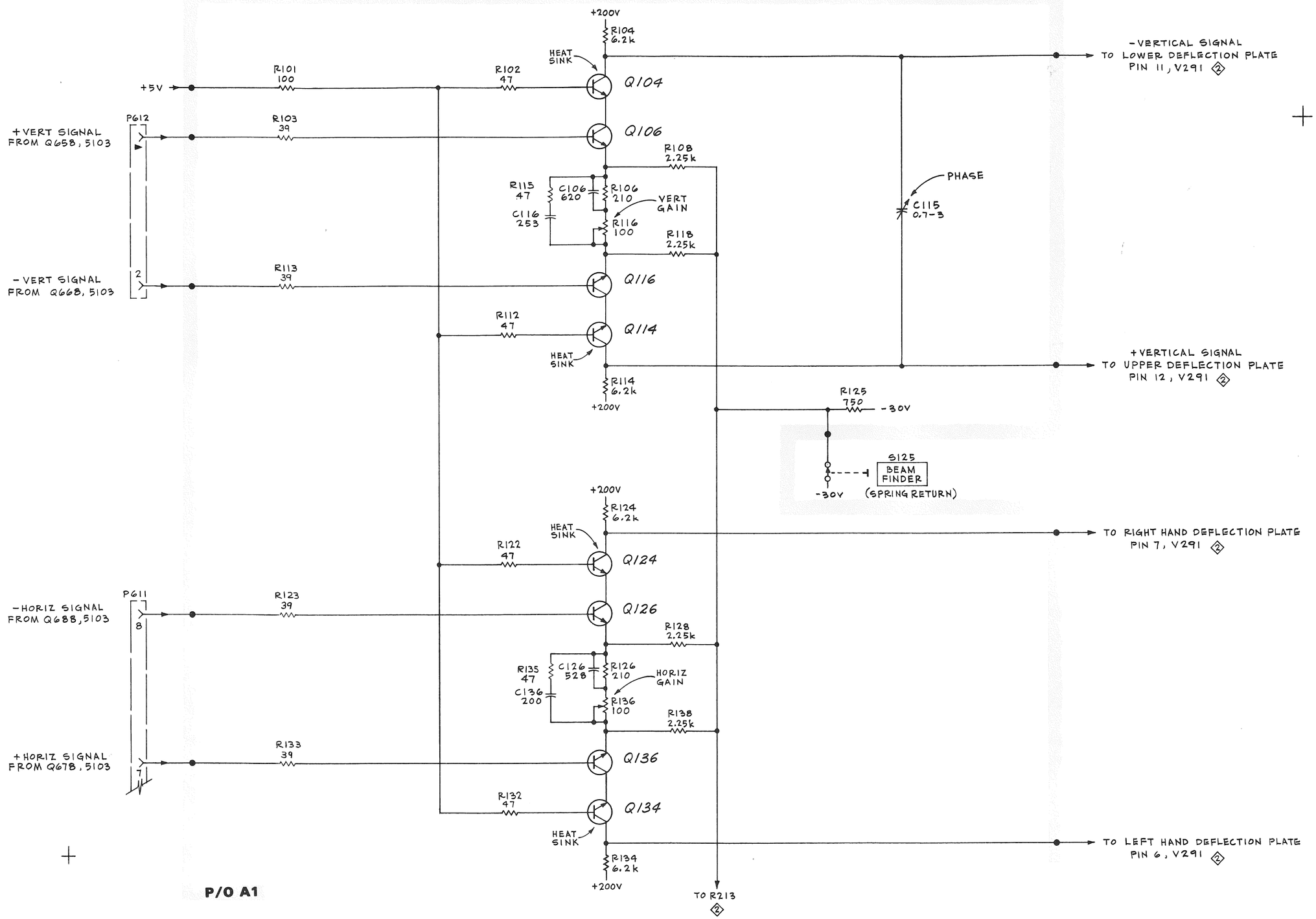

D10

Ⓐ

VERTICAL AND HORIZONTAL AMPLIFIERS ◇1

GAB 1-19-71

DEFLECTION AMPLIFIERS ◇7

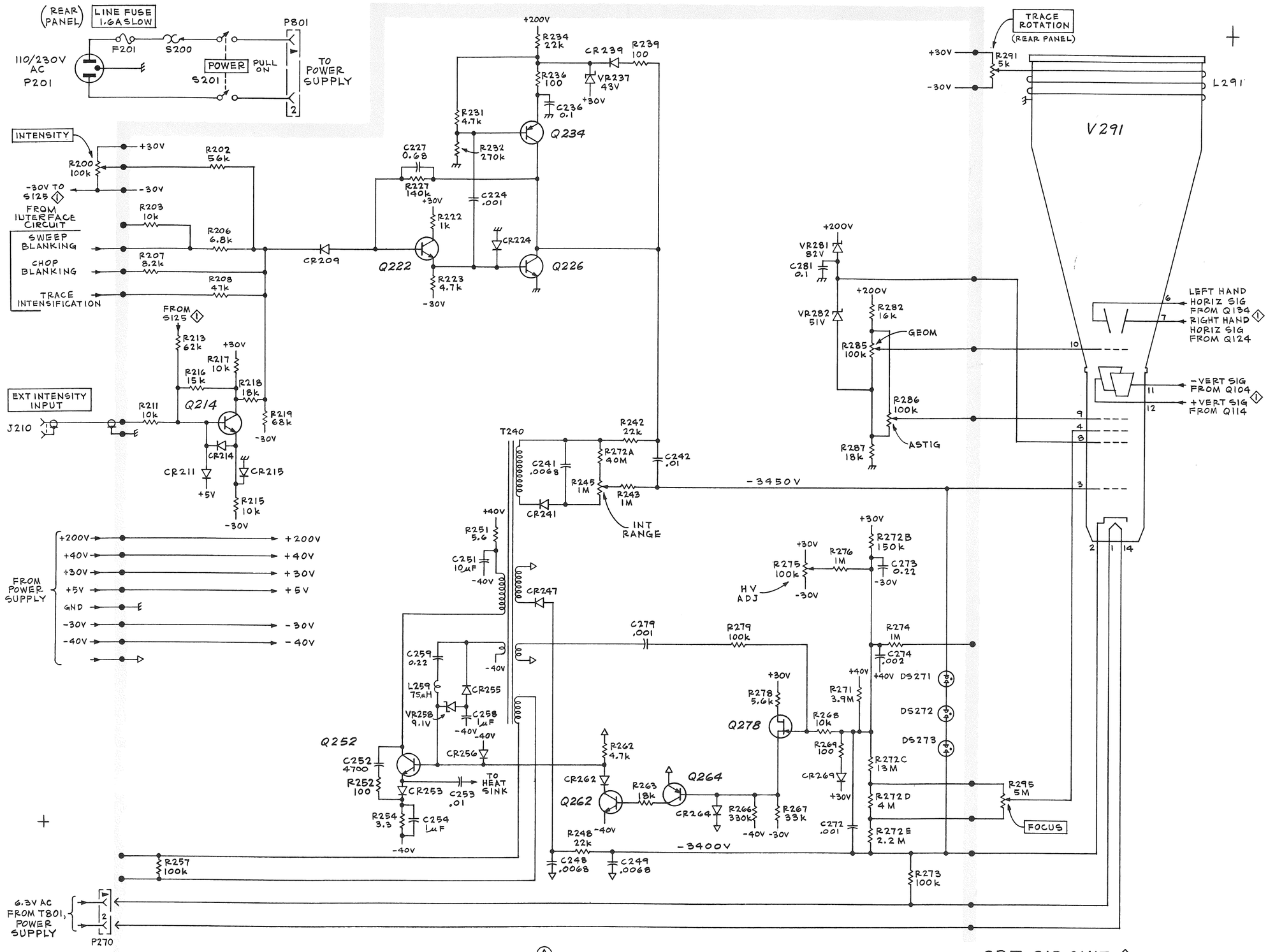

D10 **P/O A1** Ⓐ CRT CIRCUIT ② GAB 1-19-71

CRT CIRCUIT ②

AUXILIARY BOARD PARTS LOCATION GRID

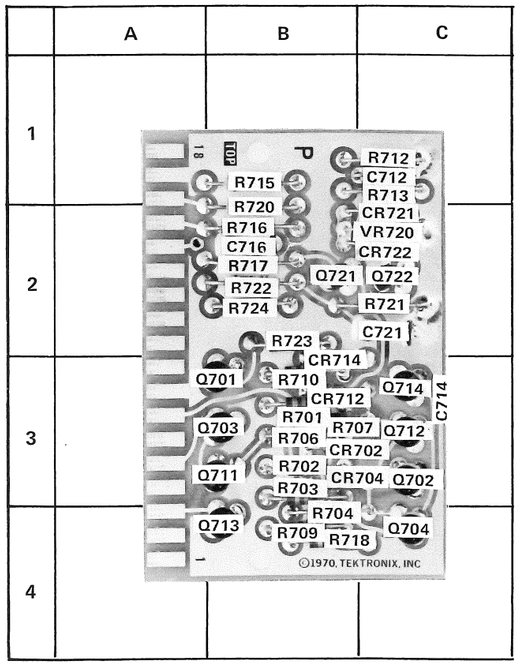

CKT NO	GRID LOC	CKT NO	GRID LOC
C712	C-1	Q721	B-2
C714	C-3	Q722	C-2
C716	B-2		
C721	C-2	R701	B-3
		R702	B-3
CR702	C-3	R703	B-3
CR704	C-3	R704	B-4
CR712	B-3	R706	B-3
CR714	B-3	R707	B-3
CR721	C-2	R709	B-4
CR722	C-2	R710	B-3
		R712	C-1
VR720	C-2	R713	C-1
		R715	B-1
Q701	B-3	R716	B-2
Q702	C-3	R717	B-2
Q703	B-3	R718	B-4
Q704	C-4	R720	B-2
Q711	B-3	R721	C-2
Q712	C-3	R722	B-2
Q713	B-4	R723	B-2
Q714	C-3	R724	B-2

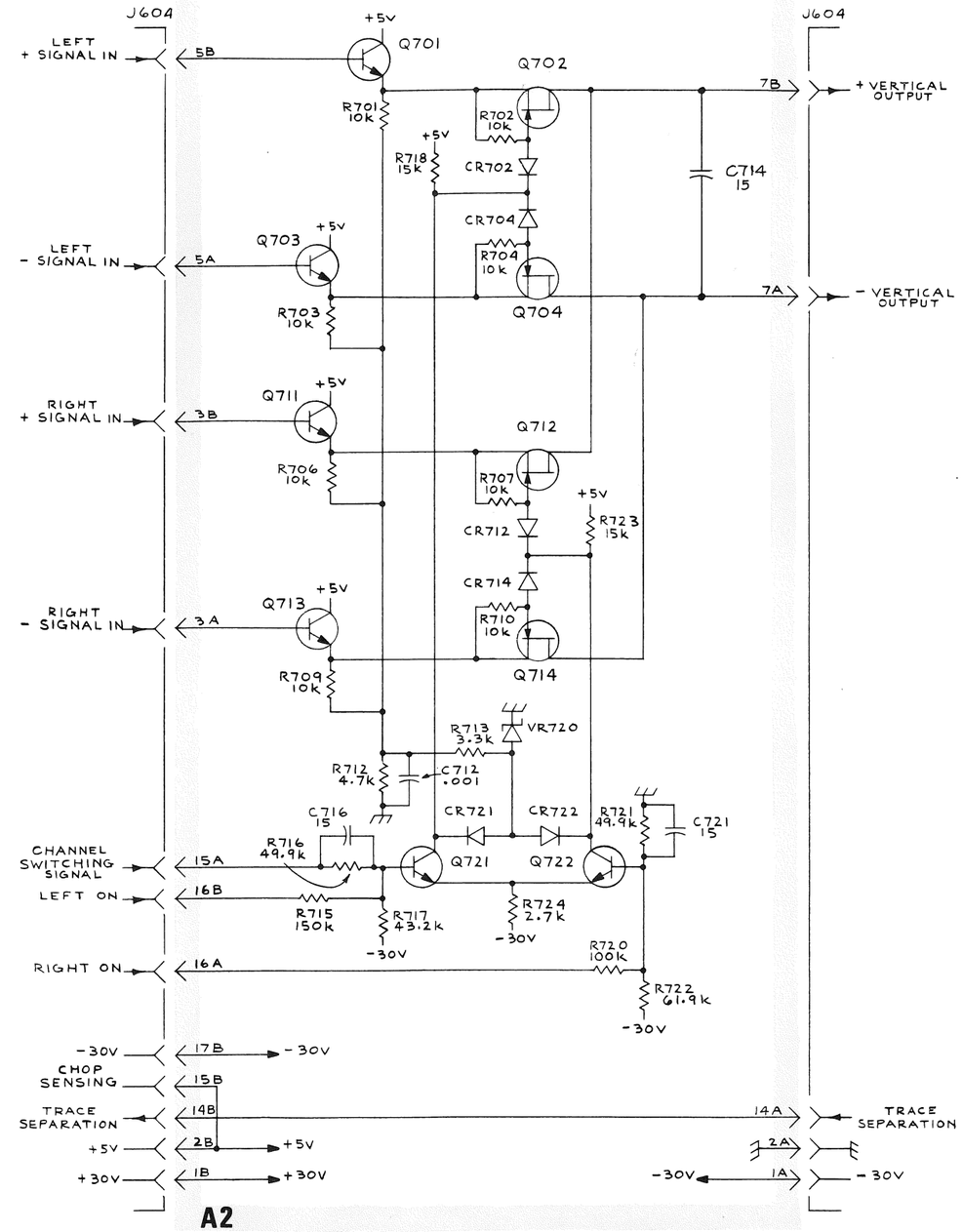

FIGURE AND INDEX NUMBERS

Items in this section are referenced by figure and index numbers to the illustrations which appear on the pullout pages immediately following the Diagrams section of this instruction manual.

INDENTATION SYSTEM

This mechanical parts list is indented to indicate item relationships. Following is an example of the indentation system used in the Description column.

Assembly and/or Component
  Detail Part of Assembly and/or Component
  mounting hardware for Detail Part
    Parts of Detail Part
    mounting hardware for Parts of Detail Part
mounting hardware for Assembly and/or Component

Mounting hardware always appears in the same indentation as the item it mounts, while the detail parts are indented to the right. Indented items are part of, and included with, the next higher indentation.

Mounting hardware must be purchased separately, unless otherwise specified.

PARTS ORDERING INFORMATION

Replacement parts are available from or through your local Tektronix, Inc. Field Office or representative.

Changes to Tektronix instruments are sometimes made to accommodate improved components as they become available, and to give you the benefit of the latest circuit improvements developed in our engineering department. It is therefore important, when ordering parts, to include the following information in your order: Part number, instrument type or number, serial or model number, and modification number if applicable.

If a part you have ordered has been replaced with a new or improved part, your local Tektronix, Inc. Field Office or representative will contact you concerning any change in part number.

Change information, if any, is located at the rear of this manual.

ABBREVIATIONS AND SYMBOLS

For an explanation of the abbreviations and symbols used in this section, please refer to the page immediately preceding the Electrical Parts List in this instruction manual.

SECTION 7
MECHANICAL PARTS LIST

FIGURE 1 EXPLODED & STANDARD ACCESSORIES

Fig. & Index No.	Tektronix Part No.	Serial/Model No. Eff	Disc	Qty	Description 1 2 3 4 5
1-1	670-1454-00			1	CIRCUIT BOARD ASSEMBLY--AUXILIARY A2
	- - - - - -			-	circuit board assembly includes:
	388-2003-00			1	CIRCUIT BOARD
-2	200-1218-00			1	BEZEL
	- - - - - -			-	bezel includes:
-3	211-0188-00			2	SCREW, 4-40 x 0.70 inch
-4	354-0233-00			2	RING, retaining, 0.10 ID x 0.203 inch OD
-5	337-1440-00			1	SHIELD, implosion
-6	386-1946-00			1	SUPPORT, CRT, front
-7	348-0279-00			2	PAD, cushioning, CRT
-8	348-0070-01			4	CUSHION, CRT, 0.69 x 2.03 inches long
-9	348-0145-00			2	GROMMET, plastic, u-shape, 1 inch
-10	334-1379-00			1	LABEL, CRT, 0.75 x 1.75 inches
-11	337-1419-00			1	SHIELD, CRT, front
-12	337-1420-00			1	SHIELD, CRT, rear
-13	354-0409-00			1	RING, clamp, CRT shield
	- - - - - -			-	mounting hardware: (not included w/ring)
-14	211-0632-00			1	SCREW, 6-32 x 2.25 inch, Fil HS
-15	343-0123-01			2	CLAMP, CRT retainer
-16	220-0444-00			1	NUT, square, 6-32 x 0.25 inch
-17	211-0507-00			2	SCREW, 6-32 x 0.312 inch, PHS
-18	407-0922-00			1	BRACKET, CRT clamp
-19	384-1064-00			1	SHAFT, extension, 10.185 inches long, w/knob
-20	119-0238-00			1	CURRENT LOOP
	- - - - - -			-	mounting hardware: (not included w/current loop)
	210-0442-00			2	NUT, hex., 3-48 x 0.188 inch
	210-0004-00			2	WASHER, lock, internal, 0.12 ID x 0.26 inch OD
	210-0994-00			2	WASHER, flat, 0.125 ID x 0.25 inch OD
	210-0935-00			2	WASHER, fiber, 0.14 ID x 0.375 inch OD
-21	361-0059-01			1	SPACER, current loop
-22	210-0593-00			2	NUT, current loop, 3-48 x 0.25 inch
-23	358-0216-00			1	BUSHING, 0.257 ID x 0.412 inch OD
-24	366-0494-00			1	KNOB, charcoal--FOCUS
	- - - - - -			-	knob includes:
	213-0153-00			1	SETSCREW, 5-40 x 0.125 inch, HSS
-25	366-0494-00			1	KNOB, charcoal--INTENSITY
	- - - - - -			-	knob includes:
	213-0153-00			1	SETSCREW, 5-40 x 0.125 inch, HSS
-26	131-0955-00			1	CONNECTOR, receptacle, female, BNC, w/hardware
	- - - - - -			-	mounting hardware: (not included w/connector)
-27	210-0255-00			1	LUG, solder, 0.375 inch, SE

FIGURE 1 EXPLODED & STANDARD ACCESSORIES (cont)

Fig. & Index No.	Tektronix Part No.	Serial/Model No. Eff	Disc	Qty	Description 1 2 3 4 5
1-28	260-1238-00			1	SWITCH, pushbutton--BEAM FINDER, w/hardware
-29	- - - - - -			2	RESISTOR, variable
	- - - - - -			-	mounting hardware for each: (not included w/resistor)
-30	210-0583-00			1	NUT, hex., 0.25-32 x 0.312 inch
-31	210-0940-00			1	WASHER, flat, 0.25 ID x 0.375 inch OD
-32	210-0046-00			1	WASHER, lock, internal, 0.261 ID x 0.408 inch OD
-33	200-0608-00			1	COVER, variable resistor, plastic
-34	333-1409-00			1	PANEL, front
-35	337-1421-00			1	SHIELD, high voltage
	- - - - - -			-	mounting hardware: (not included w/shield)
-36	211-0504-00			3	SCREW, 6-32 x 0.25 inch, PHS
-37	348-0115-00			3	GROMMET, plastic, u-shape, 0.548 inch
-38	407-0896-00			1	BRACKET, chassis
	- - - - - -			-	mounting hardware: (not included w/bracket)
-39	211-0541-00			1	SCREW, 6-32 x 0.25 inch, 100° csk, FHS
-40	260-1222-00			1	SWITCH, push-pull--POWER
-41	376-0127-00			1	COUPLER, shaft, plastic
-42	- - - - - -			1	RESISTOR, variable
	- - - - - -			-	mounting hardware: (not included w/resistor)
-43	358-0029-00			1	BUSHING, 0.375-32 x 0.50 inch
-44	210-0978-00			1	WASHER, flat, 0.375 ID x 0.50 inch OD
-45	210-0421-00			1	NUT, hex., 0.375-32 x 0.50 x 0.438 inch long
-46	210-0012-00			2	WASHER, lock, internal, 0.375 ID x 0.50 inch OD
-47	210-0207-00			1	LUG, solder, 0.375 inch, SE
-48	200-1204-01			1	COVER, CRT
	- - - - - -			-	mounting hardware: (not included w/cover)
-49	210-0401-00			2	NUT, cap, hex., 6-32 x 0.312 inch
-50	161-0033-08			1	CABLE ASSEMBLY, power, w/terminal
-51	358-0366-00			1	BUSHING, strain relief, bottom
	358-0365-00			1	BUSHING, strain relief, top
-52	200-1004-00			1	CABLE NIPPLE, 1.30 inches long
-53	352-0076-00			1	HOLDER, fuse, w/hardware
	- - - - - -			-	mounting hardware: (not included w/holder)
-54	210-0873-00			1	WASHER, rubber, 0.50 ID x 0.688 inch OD
-55	210-0201-00			1	LUG, solder, SE #6
	- - - - - -			-	mounting hardware: (not included w/lug)
-56	210-0586-00			1	NUT, keps, 4-40 x 0.25 inch

FIGURE 1 EXPLODED & STANDARD ACCESSORIES (cont)

Fig. & Index No.	Tektronix Part No.	Serial/Model No. Eff	Disc	Qty	Description 1 2 3 4 5
1-57	333-1429-00			1	PANEL, rear
-58	441-0991-00			1	CHASSIS
	- - - - - -			-	chassis includes:
-59	210-0659-01			4	EYELET
-60	344-0131-00			4	CLIP, circuit board
	- - - - - -			-	mounting hardware: (not included w/chassis)
-61	211-0504-00			2	SCREW, 6-32 x 0.25 inch, PHS
-62	211-0538-00			2	SCREW, 6-32 x 0.312 inch, 100° csk, FHS
-63	210-0457-00			2	NUT, keps, 6-32 x 0.312 inch
-64	- - - - - -			1	THERMO CUTOUT
	- - - - - -			-	mounting hardware: (not included w/thermo cutout)
-65	210-0586-00			2	NUT, keps, 4-40 x 0.25 inch
-66	344-0225-00			2	CLIP, cable, for 4 wire ribbon
-67	348-0067-00			1	GROMMET, plastic, 0.312 inch diameter
-68	343-0088-00			3	CLAMP, cable, push-on, small
-69	670-1433-00			1	CIRCUIT BOARD ASSEMBLY--HIGH VOLTAGE A1
	- - - - - -			-	circuit board assembly includes:
	388-1982-00			1	CIRCUIT BOARD
-70	131-0566-00			4	LINK, terminal connecting
-71	131-0589-00			2	TERMINAL, pin, 0.50 inch long
-72	136-0183-00			5	SOCKET, transistor, 3 pin
-73	136-0220-00			10	SOCKET, transistor, 3 pin, square
-74	136-0254-00			2	SOCKET, connector pin
-75	- - - - - -			1	TRANSISTOR
	- - - - - -			-	mounting hardware: (not included w/transistor)
-76	210-0407-00			2	NUT, hex., 6-32 x 0.25 inch
-77	210-0055-00			2	WASHER, lock, split, 0.145 ID x 0.253 inch OD
-78	210-0801-00			2	WASHER, flat, 0.14 ID x 0.281 inch OD
-79	214-1610-00			1	HEAT SINK
-80	210-1133-00			2	WASHER, fiber, 0.142 ID x 0.25 inch OD
-81	214-1538-00			1	HEAT SINK, 1.75 inches long
-82	386-0978-00			1	PLATE, mica, transistor insulating
-83	211-0511-00			2	SCREW, 6-32 x 0.50 inch, PHS
-84	214-1291-00			4	HEAT SINK, transistor
-85	337-1179-00			1	SHIELD, electrical
	- - - - - -			-	mounting hardware: (not included w/circuit board
	- - - - - -			-	assembly)
-86	211-0510-00			1	SCREW, 6-32 x 0.375 inch, PHS
-87	210-0975-00			1	WASHER, plastic, 0.14 ID x 0.375 inch OD
-88	343-0254-00			1	CLAMP, socket
-89	367-0117-00			1	PULL, CRT socket
-90	200-0917-02			1	COVER, CRT socket

Ⓐ

FIGURE 1 EXPLODED & STANDARD ACCESSORIES (cont)

Fig. & Index No.	Tektronix Part No.	Serial/Model No. Eff	Disc	Qty	Description 1 2 3 4 5
1-91	136-0450-00			1	WIRING HARNESS, CRT
	- - - - - -			-	wiring harness includes:
-92	136-0304-02			1	SOCKET, CRT, w/connectors
-93	200-1075-00			4	COVER, terminal
-94	131-0861-00			3	TERMINAL, quick disconnect
-95	195-0086-00			1	LEAD SET, CRT deflection
-96	426-0740-00			1	FRAME ASSEMBLY
-97	175-0863-00			ft	WIRE, electrical, 2 wire ribbon, 49 inches long
-98	175-0862-00			ft	WIRE, electrical, 3 wire ribbon, 12 inches long
-99	175-0859-00			ft	WIRE, electrical, 6 wire ribbon, 12.50 inches long
-100	175-0855-00			ft	WIRE, electrical, 10 wire ribbon, 10 inches long
-101	131-0621-00			22	CONNECTOR, terminal
-102	352-0198-00			3	HOLDER, terminal connector, 2 wire (black)
-103	352-0204-00			1	HOLDER, terminal connector, 8 wire (black)
-104	352-0206-00			1	HOLDER, terminal connector, 10 wire (black)
					STANDARD ACCESSORIES
	070-1132-00			1	MANUAL, instruction (not shown)

FIG. 1 EXPLODED &
STANDARD ACCESSORIES

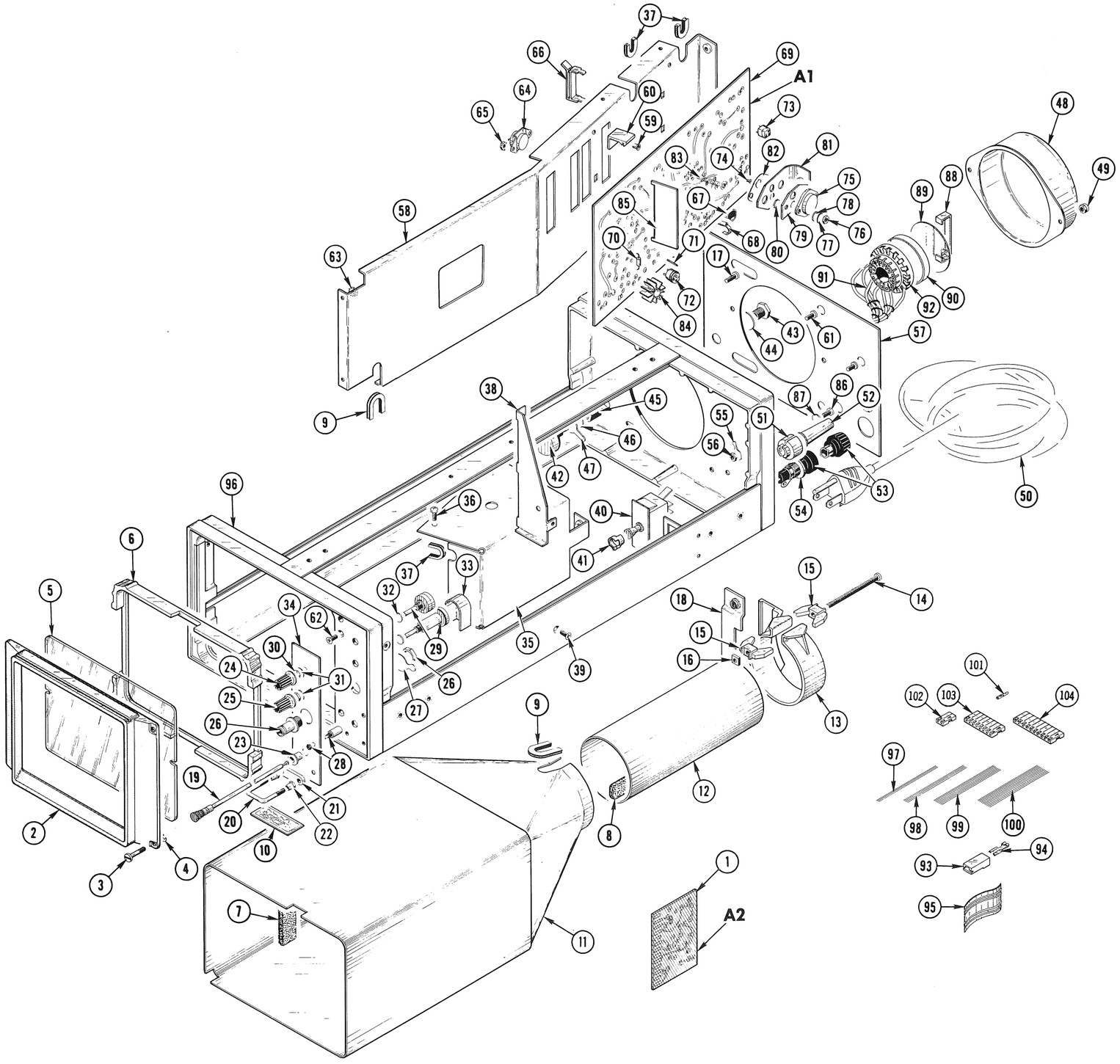

Ⓐ

D10 SINGLE-BEAM DISPLAY UNIT

FIG. 2 REPACKAGING

CARTON ASSEMBLY
(Part No. 065-0150-00)

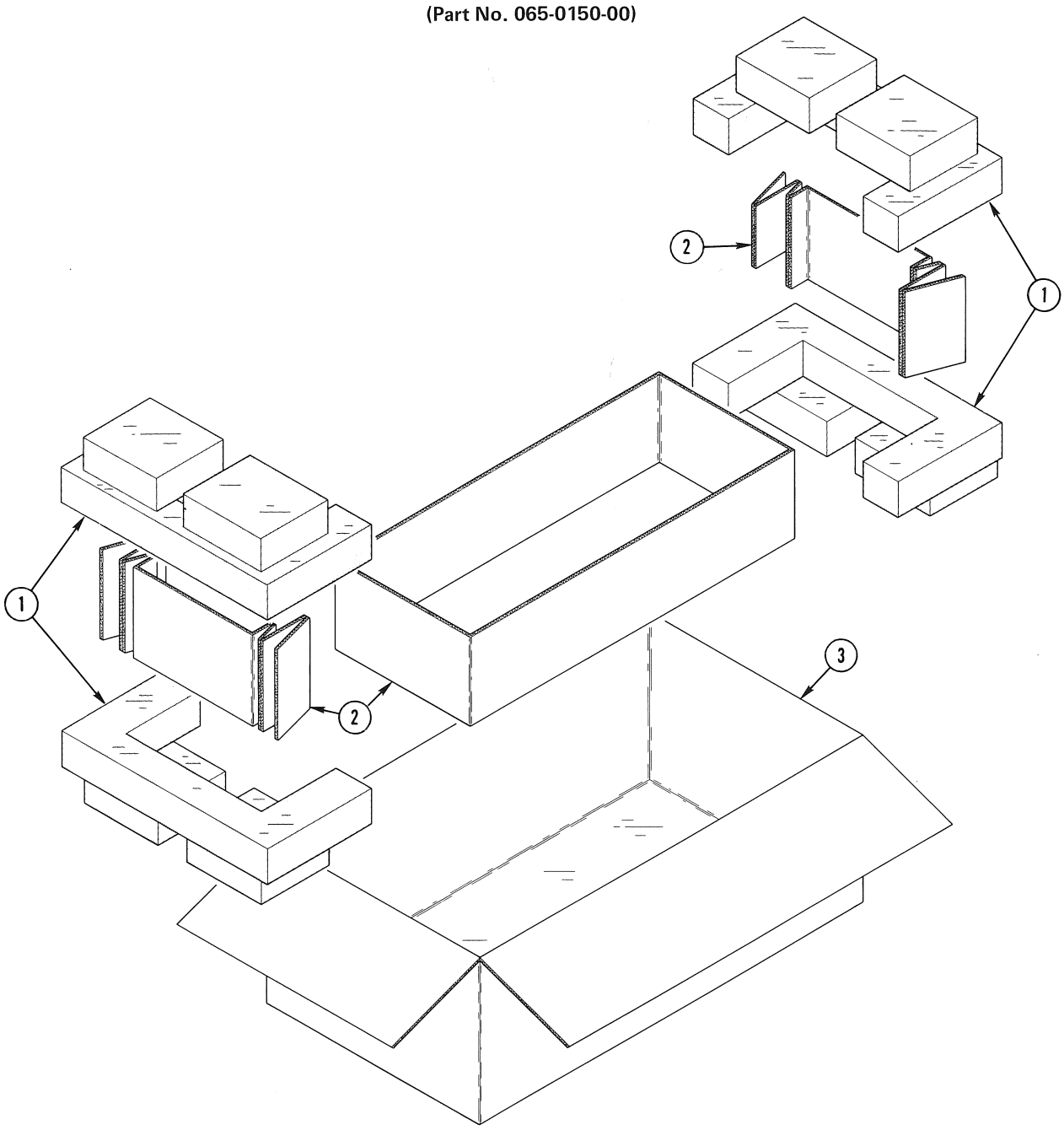

Fig. & Index No.	Tektronix Part No.	Serial/Model No. Eff	Disc	Qty	1 2 3 4 5	Description
2-	065-0150-00			1		CARTON ASSEMBLY, for display &
	- - - - - -			-		power modules
	- - - - - -			-		carton assembly includes:
-1	004-0281-00			2		ETHAFRAME, top & bottom
-2	004-1097-00			1		PAD SET, 3 piece
-3	004-0791-00			1		CARTON