Scan by Zenith

Tektronix®

AA 5001
PROGRAMMABLE DISTORTION ANALYZER WITH OPTION 02

INSTRUCTION MANUAL

Tillhör
TEKTRONIX AB
Service
08/83 00 80

Scan by Zenith

Tektronix®
COMMITTED TO EXCELLENCE

PLEASE CHECK FOR CHANGE INFORMATION AT THE REAR OF THIS MANUAL.

AA 5001
PROGRAMMABLE DISTORTION ANALYZER WITH OPTION 02

INSTRUCTION MANUAL

Tektronix, Inc.
P.O. Box 500
Beaverton, Oregon 97077

070-4598-01
Product Group 76

Serial Number _____

First Printing OCT 1982
Revised NOV 1984

Scan by Zenith

Copyright © 1982, 1984 Tektronix, Inc. All rights reserved. Contents of this publication may not be reproduced in any form without the written permission of Tektronix, Inc.

Products of Tektronix, Inc. and its subsidiaries are covered by U.S. and foreign patents and/or pending patents.

TEKTRONIX, TEK, SCOPE-MOBILE, and are registered trademarks of Tektronix, Inc. TELEQUIPMENT is a registered trademark of Tektronix U.K. Limited.

Printed in U.S.A. Specification and price change privileges are reserved.

INSTRUMENT SERIAL NUMBERS

Each instrument has a serial number on a panel insert, tag, or stamped on the chassis. The first number or letter designates the country of manufacture. The last five digits of the serial number are assigned sequentially and are unique to each instrument. Those manufactured in the United States have six unique digits. The country of manufacture is identified as follows:

B000000	Tektronix, Inc., Beaverton, Oregon, USA
100000	Tektronix Guernsey, Ltd., Channel Islands
200000	Tektronix United Kingdom, Ltd., London
300000	Sony/Tektronix, Japan
700000	Tektronix Holland, NV, Heerenveen, The Netherlands

Scan by Zenith

TABLE OF CONTENTS

	Page
LIST OF ILLUSTRATIONS	iii
LIST OF TABLES	iv
OPERATOR'S SAFETY SUMMARY	v
SERVICE SAFETY SUMMARY	vii
Section 1 SPECIFICATION	
Instrument Description	1-1
Performance Conditions	1-1
Electrical Characteristics	1-2
Environmental Characteristics	1-7
Physical Characteristics	1-7
Section 2 OPERATING INSTRUCTIONS	
Preparation for Use	2-1
Repackaging Information	2-2
Controls, Connectors, and Indicators	2-2
Instrument Connections	2-5
Level Measurements	2-6
Distortion Measurements	2-6
Distortion Measurement Procedure	2-7
High Distortion Measurement Limitations	2-9
IM Distortion Measurements	2-9
IM Distortion Measurement Procedure	2-10
Filters	2-11
Displays	2-13
Monitoring	2-13

WARNING

THE FOLLOWING SERVICING INSTRUCTIONS ARE FOR USE BY QUALIFIED PERSONNEL ONLY. TO AVOID PERSONAL INJURY, DO NOT PERFORM ANY SERVICING OTHER THAN THAT CONTAINED IN OPERATING INSTRUCTIONS UNLESS YOU ARE QUALIFIED TO DO SO. REFER TO OPERATORS SAFETY SUMMARY AND SERVICE SAFETY SUMMARY PRIOR TO PERFORMING ANY SERVICE.

	Page
Section 3 PROGRAMMING	
Introduction	3-1
GPIB Address and Terminator Setting	3-1
COMMANDS	3-3
Instrument Commands	3-3
DETAILED COMMAND LIST	3-5
Settling Algorithm	3-16
Remote Local Exceptions	3-16
MESSAGES AND COMMUNICATION PROTOCOL	3-17
Command Separator	3-17
Message Terminator	3-17
Formatting A Message	3-17
Number Formats	3-17
Rounding of Numeric Arguments	3-19
Message Protocol	3-19
Multiple Messages	3-19
Instrument Response To IEEE-488 Interface Messages	3-19
Talked With Nothing To Say Response	3-20
Remote-Local Operation	3-20
Local State (LOCS)	3-21
Local With Lockout State (LWLS)	3-21
Remote State (REMS)	3-21
Remote With Lockout State (RWLS)	3-21
Status and Error Reporting	3-21
Power Up (Initial) Conditions	3-24
The POLL Statement and Clearing SRQ	3-24
Information Available	3-24
PROGRAMMING EXAMPLES	3-25
Section 4 THEORY OF OPERATION	
Introduction	4-1
Input Amplifier	4-1
Automatic Gain Control	4-2
Notch Filter	4-2
Frequency Band Discriminator	4-3
Notch Filter Control	4-5
Distortion Amplifier	4-6
Filters and AC-DC Converters (Standard Instruments Only)	4-6

Scan by Zenith

TABLE OF CONTENTS (cont)

	Page
Section 4 THEORY OF OPERATION (cont)	
Filters and AC-DC Converters (Option 02 Instruments Only)	4-7
dB Converter	4-7
dB Offset Generator	4-8
dB Ratio Circuitry	4-8
6 V Reference	4-8
DVM	4-8
Display Board	4-9
Logic Circuitry	4-9
Power Supplies	4-10
Interface	4-10
IM Analyzer	4-10
GPIB Circuitry	4-11
Section 5 CALIBRATION	
PERFORMANCE CHECK	
Introduction	5-1
Performance Check Interval	5-1
Services Available	5-1
Test Equipment Required	5-1
Performance Check Steps	5-2
AA 5001 Performance Check Summary	5-2
PROCEDURE	5-6
ADJUSTMENT PROCEDURE	
Introduction	5-17
Test Equipment Required	5-17
Preparation	5-17
PROCEDURE	5-17
Section 6 MAINTENANCE	
Introduction	6-1
Preparation For Use	6-1
On-board Jumpers	6-1
REAR INTERFACE INFORMATION	
Functions Available at Rear Connector	6-2
+ and − Input connectors (28B, 28A)	6-2
Input Common (27B, 27A)	6-2
Auxiliary Input (25B)	6-2
Auxiliary Input Ground (26B)	6-2
Function Output (23B)	6-2
Function Output Ground (24B)	6-2
Input Monitor (24A)	6-2
Input Monitor Ground (23A)	6-2
Converter Output (20A)	6-2
dB Converter Output (19B)	6-2
dB Converter Output Ground (20B)	6-2

	Page
Section 6 MAINTENANCE (cont)	
General Maintenance Information	6-2
Troubleshooting Aids	6-2
Diagrams	6-2
Circuit Board Illustrations	6-2
Calibration Fixtures	6-4
Troubleshooting Equipment	6-4
Static-Sensitive Components	6-4
Obtaining Replacement Parts	6-5
Circuit Board Removal	6-5
1. Top Cover Removal	6-5
2. Bottom and Back Covers Removal	6-5
3. Main (A15), Input/Notch (A14), and IMD (A13) Boards Removal	6-7
4. Control Logic (A12) and GPIB (A16) Boards Removal	6-7
5. Display Board (A10) Removal	6-8
Magnetic Shield	6-8
Soldering Techniques	6-8
Semiconductors	6-8
Coaxial Cables	6-8
Exterior Cleaning	6-8
Chassis	6-8
Front Panel	6-9
Interior Cleaning	6-9
GPIB Address and Message Terminator Switches	6-9
Setting the GPIB Address Switches	6-9
Setting the Message Terminator Switch	6-10
Troubleshooting Information	6-10
Introduction	6-10
Hardware Tests	6-10
Power-on Self Test	6-10
The Test Query	6-11
Signature Analysis	6-11
Troubleshooting High Residual Distortion Problems	6-11
Section 7 OPTIONS	
Section 8 REPLACEABLE ELECTRICAL PARTS	
Section 9 DIAGRAMS AND CIRCUIT BOARD ILLUSTRATIONS	
Section 10 REPLACEABLE MECHANICAL PARTS	
CHANGE INFORMATION	

Scan by Zenith

LIST OF ILLUSTRATIONS

Fig. No.		Page
2-1	Installation and removal	2-1
2-2	Front panel controls and connectors	2-3
2-3	Typical connections for distortion measurements.	2-5
2-4	Block diagram of a basic harmonic distortion analyzer	2-7
2-5	Transfer characteristics of an audio device	2-7
2-6	THD test of transfer characteristics	2-8
2-7	Block diagram of basic IM analyzer	2-10
2-8	IM test of transfer characteristics in time and frequency domain	2-11
2-9	Response curves for AA 5001 filters	2-12
2-10	Oscilloscope display of deviation from linearity	2-14
3-1	AA 5001 commands and relationships to front panel controls. See command lists for descriptions	3-2
3-2	ASCII and IEEE 488 (GPIB) code chart	3-18
3-3	Definition of status bytes	3-21
3-4	AA 5001 Talker Listener Program (4052A)	3-25
3-5	AA 5001 Talker Listener Program (4041)	3-26
3-6	AA 5001 program example (4050A series)	3-27
3-7	AA 5001 program example (4041)	3-31
3-8	AA 5001 program example (4050A series)	3-34
3-9	AA 5001 program example (4041)	3-38
3-10	AA 5001 program example (4050A series)	3-41
3-11	AA 5001 program example (4041)	3-45
3-12	AA 5001 program example (4050 series)	3-48
3-13	AA 5001 program example (4041)	3-53
4-1	Simplified notch filter	4-2
4-2	Frequency band discriminator	4-4
4-3	Intermodulation distortion analyzer block diagram	4-11
5-1	AA 5001 grounded unbalanced input connection	5-7
5-2	AA 5001 common mode input connection	5-8
5-3	AA 5001 check/adjust step	5-12
5-4	AA 5001 top cover adjustments access	5-17
6-1	Main board rear interface connector assignments	6-3
6-2	GPIB board rear interface connector assignments	6-4
6-3	Circuit boards and connectors pictorial (top view)	6-6
6-4	Latch assembly pictorial	6-7
6-5	GPIB address and message terminator switches	6-9

Scan by Zenith

LIST OF TABLES

Table No.		Page
1-1	ELECTRICAL CHARACTERISTICS	1-2
1-2	ENVIRONMENTAL CHARACTERISTICS	1-7
1-3	PHYSICAL CHARACTERISTICS	1-7
2-1	Gains from INPUT terminals to FUNCTION OUTPUT connector for various settings of the INPUT LEVEL RANGE control	2-13
3-1	ERROR QUERY AND STATUS INFORMATION	3-23
3-2	POWER UP SETTINGS	3-24
4-1	TRUTH TABLE FOR U2042 OUTPUTS	4-5
4-2	INTERNAL CONNECTIONS IN U1010 DEPENDING ON LOGIC STATES OF PINS 10 AND 11	4-5
4-3	GAIN AND SWITCHING THROUGH U2031	4-6
4-4	TRUTH TABLE FOR U1021	4-6
5-1	Suggested Test Equipment	5-1
5-2	Common Mode Rejection CHECK	5-7
5-3	Level Function Volts Accuracy	5-9
5-4	Total Harmonic Distortion Accuracy CHECK	5-12
6-1	RELATIVE SUSCEPTIBILITY TO STATIC DISCHARGE DAMAGE	6-5
6-2	IEEE 488 (GPIB) PRIMARY ADDRESSES	6-10
6-3	FRONT PANEL ERROR DISPLAY POWER-ON SELF TESTS	6-11
6-4	HIGH DISTORTION/NOISE SYSMPTOMS AND PROBABLE CAUSES	6-12

Scan by Zenith

OPERATORS SAFETY SUMMARY

This general safety information is for both operating and servicing personnel. Specific warnings and cautions will be found throughout the manual where they apply, but may not appear in this summary.

TERMS

In This Manual

CAUTION statements identify conditions or practices that can result in damage to the equipment or other property.

WARNING statements identify conditions or practices that can result in personal injury or loss of life.

As Marked on Equipment

CAUTION indicates a personal injury hazard not immediately accessible as one reads the marking, or a hazard to property including the equipment itself.

DANGER indicates a personal injury hazard immediately accessible as one reads the marking.

SYMBOLS

In This Manual

This symbol indicates where applicable cautionary or other information is to be found.

Protective ground (earth) terminal.

ATTENTION—refer to manual.

Refer to manual.

Power Source

This product is designed to operate from a power module that does not apply more than 250 volts rms between the supply conductors or between either supply conductor and ground. A protective ground connection by way of the grounding conductor in the power cord is essential for safe operation.

Grounding the Product

This product is grounded through the grounding conductor of the power module power cord. To avoid electrical shock, plug the power cord into a properly wired receptacle before connecting to the product input or output terminals. A protective ground connection by way of the grounding conductor in the power cord is essential for safe operation.

Danger Arising From Loss of Ground

Upon loss of the protective-ground connection, all accessible conductive parts (including knobs and controls that may appear to be insulating) can render an electric shock.

Use the Proper Power Cord

Use only the power cord and connector specified for your product.

Use only a power cord that is in good condition.

Refer cord and connector changes to qualified service personnel.

Use the Proper Fuse

To avoid fire hazard, use only the fuses specified in the parts list for your product, and which is identical in type, voltage rating and current rating.

Refer fuse replacement to qualified service personnel.

Do Not Operate in Explosive Atmospheres

To avoid explosion, do not operate this product in an atmosphere of explosive gases unless it has been specifically certified for such operation.

Do Not Operate Plug-in Unit Without Covers

To avoid personal injury, do not operate this product without covers or panels installed. Do not apply power to the plug-in via a plug-in extender.

Scan by Zenith

SERVICING SAFETY SUMMARY

FOR QUALIFIED SERVICE PERSONNEL ONLY

Refer also to the preceding Operators Safety Summary

Do Not Service Alone

Do not perform internal service or adjustment of this product unless another person capable of rendering first aid and resuscitation is present.

Use Care When Servicing With Power On

Dangerous voltages may exist at several points in this product. To avoid personal injury, do not touch exposed connections and components while power is on.

Disconnect power before removing protective panels, soldering, or replacing components.

Do Not Wear Jewelry

Remove jewelry prior to servicing. Rings, necklaces, and other metallic objects could come into contact with dangerous voltages and currents.

Power Source

This product is intended to operate from a power module that will not apply more than 250 volts rms between the supply conductors or between either supply conductor and ground. A protective ground connection by way of the grounding conductor in the power cord is essential for safe operation.

Scan by Zenith

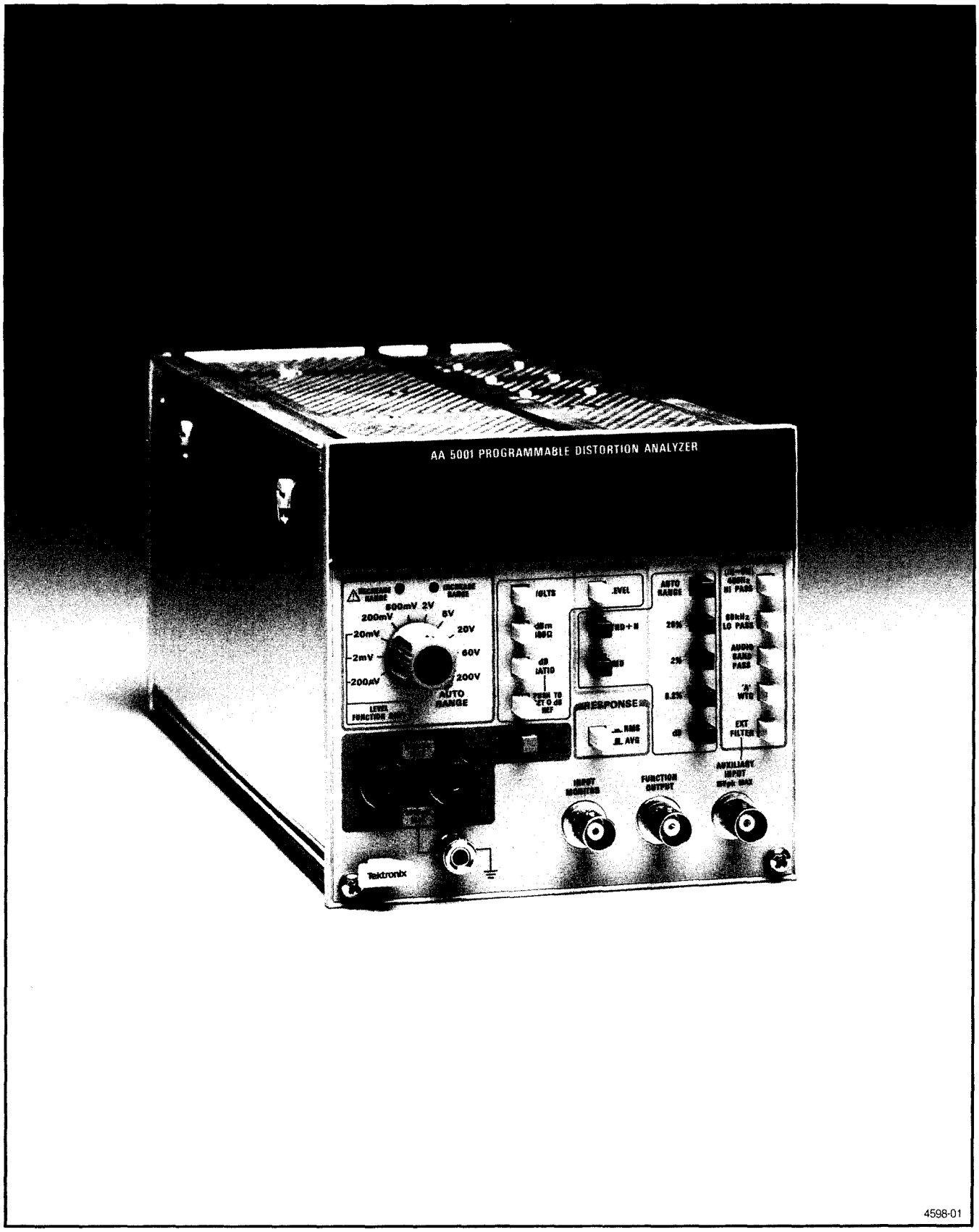

AA 5001 Programmable Distortion Analyzer.

Scan by Zenith

SPECIFICATION

Instrument Description

The AA 5001 is a fully automatic programmable distortion analyzer, packaged as a two-wide TM 5000 plug-in. Total harmonic distortion, SMPTE/DIN intermodulation distortion and CCIF two-tone difference frequency distortion are measured. Distortion set level, frequency tuning and nulling are fully automatic, requiring no operator adjustment. Distortion readout is provided in percent or dB.

The AA 5001 is also a high sensitivity, autoranging, audio frequency voltmeter. Readings may be in volts, dBm, or dB relative to any arbitrary reference.

Filters are included which allow bandwidth limiting or weighted measurement of noise. A hum rejection filter is also provided as are provisions for an external filter.

All readings are displayed on a 3-1/2 digit readout and can be remotely sent. An uncalibrated analog readout is also provided to aid in manual nulling and peaking applications. Ac to dc detection (response) is either true rms or average (quasi-peak in Option 02 instruments).

Ac input and output connections are available on both the front panel and the rear interface. Dc signals, corresponding to the displayed reading, are available through the rear interface. This allows flexibility in interconnection with other instruments such as filters, chart recorders, spectrum analyzers, oscilloscopes, etc.

Performance Conditions

The electrical characteristics in this specification are valid only if the AA 5001 has been adjusted at an ambient temperature between +20°C and +30°C. The instrument must be in a noncondensing environment whose limits are described under the environmental part. Allow twenty minutes warm-up time for operation to specified accuracy; sixty minutes after exposure to or storage in a high humidity (condensing) environment. Any conditions that are unique to a particular characteristic are expressly stated as part of that characteristic. Unless specifically noted, all performance specifications are valid using only rms response only.

The electrical and environmental performance limits, together with their related validation procedures, comprise a complete statement of the electrical and environmental performance of a calibrated instrument.

Items listed in the Performance Requirements column of the Electrical Characteristics are verified by completing the Performance Check in the Calibration section of this manual. Items listed in the Supplemental Information column are not verified in this manual.

Scan by Zenith

Table 1-1
ELECTRICAL CHARACTERISTICS

Characteristics	Performance Requirement	Supplemental Information
INPUT (all functions)		
Impedance	100 kΩ, ±2%, each side to ground	Full differential. Each side ac coupled through 1 μF and shunted to ground by approximately equal to 200 pF. Dual banana jack connectors at 0.750 inch spacing with ground connector additionally provided.
Input ranges	200 μV to 200 V in 10 steps (2-6 sequence from 200 mV to 200 V)	Range selection is manual or automatic. Autoranging time is typically <1 second. Separate increase range and decrease range indicators illuminate whenever input level does not fall within optimum window for selected range. For specified instrument performance both indicators must be extinguished.
Maximum input voltage		300 V peak, 200 V rms either input to ground or differentially. Will recover without damage from continuous overloads of 120 V rms or 200 V rms for 30 minutes in all ranges. For linear response, peak input voltage must not exceed 3 times INPUT RANGE setting.
Common mode rejection (Inputs shorted)	⩾50 dB at 50 or 60 Hz for common mode signals up to one-half of selected input range or 50 mV, whichever is greater.	Typically ⩾40 dB to 300 kHz.
LEVEL FUNCTION		
Modes		Volts, dBm (600 Ω), or dB ratio with push to set 0 dB reference. Input range determines display range. Single effective range in dB modes with 0.1 dB resolution. Stored 0 dB reference is unaffected by subsequent changes in mode or function.
Accuracy (level ranging indicators extinguished)	Volts / dB modes	
20 Hz to 20 kHz	Within +2% ±1 count / ±0.3 dB[a] ±0.5% of reading	
1 Hz to 100 kHz	Within +4% ±2 counts / ±0.5 dB[a] ±0.5% of reading	
Bandwidth (no filters selected)	At least 300 kHz	

Scan by Zenith

Table 1-1 (cont)

Characteristics	Performance Requirement	Supplemental Information
Residual noise (Inputs shorted, T≤+40°C)	≤3.0 μV (−108 dBm) with 80 kHz, 400 Hz filters. ≤1.5 μV (−114 dBm) with A weighting filter. (Standard instrument only). ≤5.0 μV (−104 dBm) with CCIR weighting and quasi-peak response (Option 02 only).	
TOTAL HARMONIC DISTORTION PLUS NOISE FUNCTION		
Operation		Fully automatic notch filter tuning and nulling for valid test signals with 10% or less THD + N. Midband signal THD + N can degrade to 30% without loss of lock following initial tuning for SINAD testing. Typical or average measurement settling time is 2.5 seconds above 100 Hz increasing by approximately 1 sec/octave below 100 Hz.
Fundamental frequency range	10 Hz to 100 kHz	
Minimum input level	60 mV (−22 dBm)	
Accuracy		Autoranging % or dB modes only. 100% reference level is total input signal amplitude including distortion and noise components. Accuracy may also be limited by the effects of residual THD + N and filter selection.
20 Hz to 20 kHz	Within ±10% (±1 dB) for harmonics ≤100 kHz.	
10 Hz to 100 kHz	Within ±20% (±2 dB) for harmonics ≤300 kHz.	
Residual THD + N (V_{in} ≥250 mV, T ≤+40°C)		System specification with any SG5010 or SG 505 oscillator, all distortion, noise, and nulling error sources combined.
20 Hz to 20 kHz with 80 kHz noise limiting filter	≤0.032% (−90 dB)	
10 Hz to 100 kHz, no filter	≤0.010% (−80 dB)	
Typical fundamental rejection		At least 10 dB below specified residual THD + N or the actual signal THD, whichever is greater.

Scan by Zenith

Table 1-1 (cont)

Characteristics	Performance Requirement	Supplemental Information
INTERMODULATION DISTORTION FUNCTION		
Operation		Fully automatic SMPTE/DIN or CCIF difference tone test selection depending upon actual input signal whenever respective IMD ≤20%. Typical or average measurement settling time is 2 sec or less.
SMPTE and DIN tests		
Frequency range (upper tone)		Useable from 3 kHz to beyond 100 kHz.
IM frequency range (lower tone)		50 Hz to 250 Hz.
Level ratio range		1:1 to 4:1 (lower:upper)
Residual IMD (V_{in} ≥250 mV, T ≤+40°C.)	≤.0032% (−90 dB) with 60 Hz and 7 kHz or 250 Hz and 8 kHz test tones	System specification with any SG 5010 oscillator or passively summed SG 505 oscillator pair.
CCIF difference tone test		
Frequency range		Useable from 4 kHz to beyond 100 kHz.
Difference frequency range		80 Hz to 1 kHz.
Residual IMD (V_{in} ≥250 mV, T+40°C.)	≤0.0018% (−95 dB) with 14 kHz and 15 kHz test tones.	System specification with any SG 5010 oscillator or passively summed SG 505 oscillator pair.
Minimum input level	60 mV (−22 dBm)	
Accuracy	Within ±10% (±1 dB) for IM components ≤1 kHz	Autoranging % or dB modes only. Accuracy may also be limited by the effects of residual IMD and filter selection.
FILTERS		
400 Hz high pass	−3 dB at 400 Hz, ±5%; at least −40 dB rejection at 60 Hz	3 pole Butterworth response
80 kHz low pass	−3 dB at 80 kHz, ±5%	3 pole Butterworth response
Audio bandpass	−3 dB at 22.4 Hz, ±5% and 22.4 kHz, ±5%	Within specifications of CCIR Recommendation 468-2 and DIN 45405 for unweighted measurement response.
A weighting (standard instrument only)		Within specifications for type 1 sound level meters listed in ANSI S 1.4 1971 (revised 1976) and IEC Recommendation 179.
CCIR WTG (Option 02 only)		Within specifications of CCIR Recommendation 468-2 and DIN 45405 for noise measurements with quasi-peak detector. Rms detector calibration shifted for 0 dB at 2.00 kHz instead of 1.00 kHz.
External Filter		Selects front panel AUXILIARY INPUT allowing connection of external filter between it and FUNCTION OUTPUT.

Scan by Zenith

Table 1-1 (cont)

Characteristics	Performance Requirement	Supplemental Information
FRONT PANEL SIGNALS		
INPUT MONITOR		
$V_{in} \geqslant 50$ mV	1 V rms, ±10%	Constant amplitude (average response) version of differential input signal. THD is typically ≤0.0010% (−100 dB) from 20 Hz to 20 kHz.
$V_{in} < 50$ mV		Approximately 20 times input signal.
Impedance	1 kΩ, ±5%	
FUNCTION OUTPUT		
Signal	1 V, ±3%, for 1000 count volts or % display	Selected and filtered ac signal actually measured.
Impedance	1 kΩ, ±5%	
AUXILIARY INPUT		
Sensitivity	1 V, ±3%, for 1000 count volts or % display	Loop through accuracy from FUNCTION OUTPUT is ±3%.
Maximum Input Voltage		15 V peak, 6 V peak for linear response.
Impedance	100 kΩ, ±5%	Ac coupled.
REAR INTERFACE SIGNALS		
Rear interface input		Pins 28B (+), 28A (−), 27B and 27A (common) are front panel selectable and independent of main front panel input. All characteristics are the same as main INPUT except maximum input voltage is limited to 42 V peak, 30 V rms. Due to potential crosstalk at the rear interface, noise and distortion performance may be degraded.
Input monitor		Pins 24A and 23A (gnd) same as front panel FUNCTION OUTPUT.
Function output		Pins 23B and 24B (gnd) same as front panel FUNCTION OUTPUT.
Auxiliary input		Pins 25B and 26B (gnd) same as front panel AUXILIARY INPUT. Maximum input voltage is 15 V peak, 6 V peak for linear operation.
AC/DC Converter output		Pins 20A and 19A (gnd). Dc output of the selected ac to dc converter. 1 V ±5% for 1000 count display with 500 Ω ±5% source resistance.
dB converter output		Pins 19B and 20B (gnd). Dc output of the logarithmic dB converter. 10 mV ±5% equals 1 dB of display with 2 kΩ ±5% source resistance. Changes in level or distortion range will cause brief ac transients.

Scan by Zenith

Table 1-1 (cont)

Characteristics	Performance Requirement	Supplemental Information
DETECTORS AND DISPLAYS		
Detectors (Response)		
RMS		True rms detection.
AVG (standard instrument only)		Average detection, rms calibrated for sinewaves. Typically reads 1 to 2 dB lower than true rms detection for noise, THD + N and IMD measurements.
Quasi-peak (Option 02 only)		Quasi-peak detection, rms calibrated for sinewaves. Within specificaitons of CCIR Recommendation 468-2 and DIN 45405. Due to the peak hold nature of its response readings, considerably higher than rms response will occur with large crest factor signals (such as noise). The input range indicators should be ignored and auto-ranging avoided with these types of signals.
Displays		
Digital		3-1/2 digit, 2000 count LED. Overrange indication is 1, blank, blank, blank.
Analog bar graph		10 segment LED intensity modulated bar graph display of digital readout. Segments are logarithmically activated with approximately 2.5 dB/segment.
MISCELLANEOUS		
Power consumption		Approximately 24 watts
Internal Power Supplies		
+15		Nominally +15.1 V, ±3%
−15		Nominally −15 V, ±5%
+5		Nominally +5.25 V, ±2%
Fuse Data		
F1610		3 AG, 1 A, 250 V, fast blow
F1620		3 AG, 1 A, 250 V, fast blow
F1621		3 AG, 1 A, 250 V, fast blow
Recommended adjustment interval		2000 hours or 12 months whichever occurs first.
Warm-up time		20 minutes (60 minutes after storage in high humidity environment).

[a] ±0.2 dB at 1 kHz only. Flatness is ±0.1 dB, 20 Hz to 20 kHz, and ±0.3 dB, 10 Hz to 100 kHz.

Scan by Zenith

Table 1-2
ENVIRONMENTAL CHARACTERISTICS[a]

Characteristics	Description	
Temperature Operating Nonoperating	 0 to ±50°C −40 to +75°C −40 to +75°C	Meets MIL-T-28800B, class 5.
Humidity	95% RH, 0 to ±30°C 75% RH to +40°C 45% RH to +50°C	Meets MIL-T-28800B, class 5.
Altitude Operating Nonoperating	 4.6 km (15,,000 ft.) 15 km (50,000 ft.)	Exceeds MIL-T-28800B, class 5.
Vibration	0.38 mm (0.015″) peak to peak, 5 Hz to 55 Hz, 75 minutes	Meets MIL-T-28800B, class 5, when installed in qualified power modules.[b]
Shock	30 g's (1/2 sine), 11 ms duration, 3 shocks in each direction along 3 major axes, 18 total shocks	Meets MIL-T-28800B, class 5, when installed in qualified power modules.[b] [c]
Bench Handling[c]	12 drops from 45°, 4″ or equilibrium, whichever occurs first.	Meets MIL-T-28800B, class 5.
Package Product Vibration and Shock (Plug-in only)	Qualified under National Safe Transit Association Preshipment Test Procedure 1A-B-1 and 1A-B-2.	
Electromagnetic Interference	Within limits of F.C.C. Regulations, Part 15, Subpart J, Class A; and MIL-STD-461B (April 1, 1980) Class B.	
Electrostatic Immunity	At least 15 kV discharge from 500 pF in series with 100 Ω to instrument case or any front panel connector without damage or permanent performance degradation (Input terminals limited to 10 kV).	

[a]With TM 5000-Series power module. System performance subject to exceptions of power module or other individual plug-ins.

[b]Refer to power module specifications.

[c]Requires power module retainer bar or clip.

Table 1-3
PHYSICAL CHARACTERISTICS

Characteristics	Description
Maximum Overall Dimensions Height Width Length	 126.0 mm (4.96 inches) 131.2 mm (5.16 inches) 285.5 mm (11.24 inches)
Net Weight	Approximately equal to 2.04 kg (4.5 lbs.)
Finish Front Panel Chassis	 Plastic-aluminum laminate Anodized aluminum

Scan by Zenith

OPERATING INSTRUCTIONS

Preparation For Use

The AA 5001 is calibrated and ready for use when received. It operates in any two compartments of a TM 5000-Series power module. See the power module instruction manual for line voltage requirements and power module operation. Figure 2-1 shows the AA 5001 installation and removal procedure.

Check to see that the plastic barriers on the interconnecting jack of the selected power module compartment match the cutouts in the AA 5001 circuit board edge connector. Align the AA 5001 chassis with the upper and lower guides of the selected compartment. Press the AA 5001 in, to firmly seat the circuit board in the interconnecting jack.

CAUTION

Turn the power module off before inserting the AA 5001. Otherwise, arcing may occur at the rear interface connectors, reducing their useful life and damage may result to the plug-in circuitry.

To remove the AA 5001 pull the release latch (located in the lower left corner) until the interconnecting jack disengages and the AA 5001 slides out.

Check that the AA 5001 is fully inserted in the power module. Push the power switch on the power module. One or more characters in the LED display should now be visible.

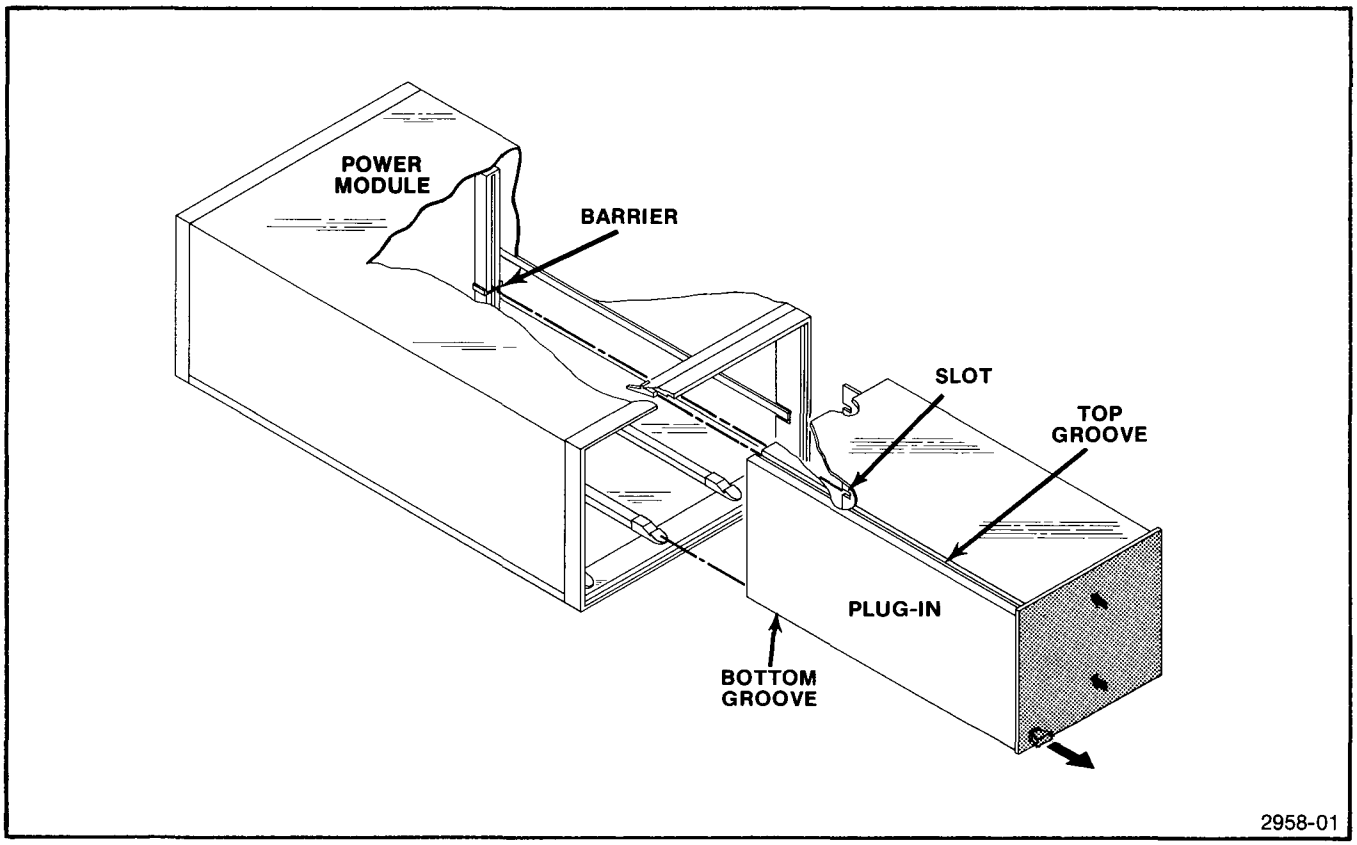

Fig. 2-1. Installation and removal.

Scan by Zenith

NOTE

The AA 5001 can be operated via the front panel or by commands sent over the GPIB by a suitable controller. This section discusses front panel operation. See the Programming section of this manual for instrument operation via the GPIB.

Repackaging Information

If the Tektronix instrument is to be shipped to a Tektronix Service Center for service or repair, attach a tag showing the owner (with address) and the name of an individual at your firm that can be contacted. Include the complete instrument serial number and a description of the service required.

Save and reuse the package in which your instrument was shipped. If the original packaging is unfit for use or not available, repackage the instrument as follows:

Surround the instrument with polyethylene sheeting to protect the finish of the instrument. Obtain a carton of corrugated cardboard of the correct carton strength and having inside dimensions of no less than six inches more than the instrument dimensions. Cushion the instrument by tightly packing three inches of dunnage or urethane foam between carton and instrument on all sides. Seal the carton with shipping tape or an industrial stapler.

The carton test strength for this instrument is 200 pounds per square inch.

Controls, Connectors, and Indicators

All controls, connectors and indicators (except for the rear interface connector) required for operation of the AA 5001 are located on the front panel. Fig. 2-2 provides a brief description of all front panel controls, connectors, and indicators.

(1) **INPUT RANGE**
Selects input voltage range or AUTORANGE. The three most sensitive ranges operate in the LEVEL FUNCTION only. (The AA 5001 goes to AUTORANGE when in a remote state.)

(2) **DECREASE RANGE** ⚠
When this light is illuminated, reduce the INPUT LEVEL RANGE until the light goes out. If the FUNCTION selected is THD+N or IMD a flashing light indicates insufficient input signal level for distortion measurements.

(3) **INCREASE RANGE**
When this light is illuminated, increase the INPUT LEVEL RANGE until the light goes out.

(4) **INPUT**
Differential input terminal. Positive going input signal provides positive going output signal at INPUT MONITOR.

(5) **INPUT**
Differential input terminal. Negative going input signal provides positive going output at INPUT MONITOR.

(6) **Release Latch**

(7) **LEVEL**
Button in selects input level measuring function.

(8) **VOLTS**
Button in selects voltage units for level function.

(9) **dBm 600 Ω**
Button in selects dBm units for level function. 0 dB reference is 0.7746 V corresponding to 1 mW into 600 Ω.

(10) **dB RATIO**
Button in selects dB ratio, with respect to preset level, as units for level function.

(11) **PUSH TO SET 0 dB REF**
Push button to set display to 0 with input signal applied to INPUT terminals in LEVEL function. dB RATIO and LEVEL pushbuttons must be in for this feature to operate.

(12) **REAR INTFC-INPUT**
Button in selects rear interface input; button out selects front panel input.

(13) **RESPONSE**
Button in gives RMS detection (responds to the rms value of the input waveform). Button out gives average detection or quasi-peak detection (option 02 instruments) both are rms calibrated for sinewaves.

Scan by Zenith

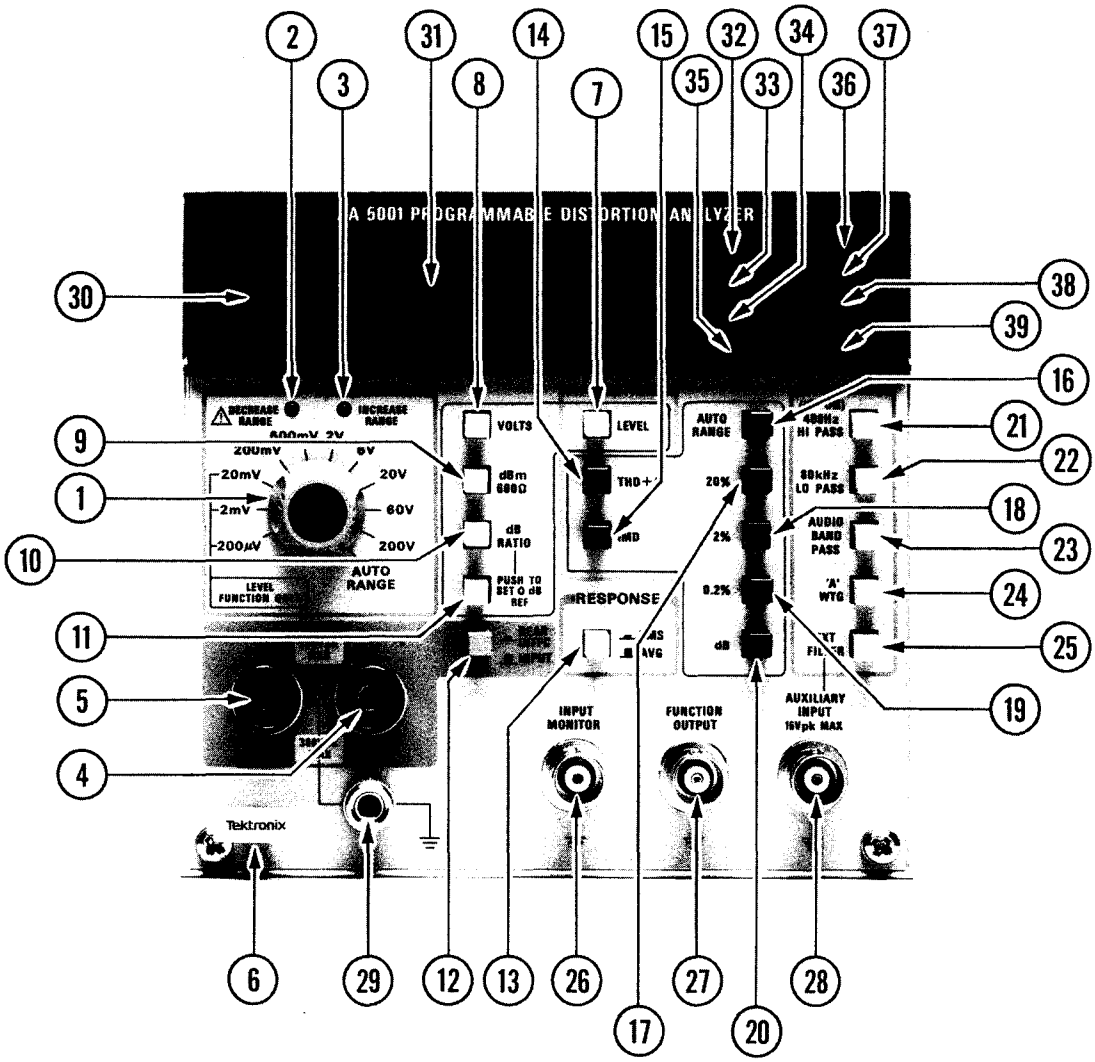

4598-02

Fig. 2-2. Front panel controls and connectors.

Scan by Zenith

(14) **THD+N**
Button in selects total harmonic distortion function.

(15) **IMD**
Button in selects intermodulation distortion function.

(16) **AUTO RANGE**
Button in selects automatic distortion range selection (0.2% to 100% full scale). (The AA 5001 goes to AUTORANGE when in a remote state.)

(17) **20%**
Button in selects full scale distortion readout of 20% with 0.01% resolution.

(18) **2%**
Button in selects full scale distortion readout of 2% with 0.001% resolution.

(19) **0.2%**
Button in selects full scale distortion readout of 0.2% with 0.0001% resolution.

(20) **dB**
Selects single equivalent 0 dB to −100 dB distortion display range with 0.1 dB resolution.

(21) **400 Hz HI PASS**
Button in connects filter before detector circuit in all functions.

(22) **80 kHz LO PASS**
Button in connects filter before detector circuit in all functions.

(23) **AUDIO BANDPASS**
Button in connects filter before detector circuit in all functions.

(24) **'A' WEIGHTING (CCIR WEIGHTING In Option 02 Instruments)**
Button in connects filter before detector circuit in all functions.

(25) **EXT FILTER**
Button in allows connection of external filter between FUNCTION OUTPUT and AUXILIARY INPUT in all functions.

(26) **INPUT MONITOR**
Provides a buffered sample of the input signal.

(27) **FUNCTION OUTPUT**
Provides a sample of the selected FUNCTION signal additionally processed by selected filters.

(28) **AUXILIARY INPUT**
Provides input to the detector circuit when the EXT FILTER button is pressed.

(29) **Ground**
Provides front panel chassis ground connection.

(30) **LED Bar Graph**
Provides approximate analog display of the digital display for nulling and peaking. Each segment represents approximately 2.5 dB.

(31) **Digital Display**
3-1/2 digits. Overrange indication is a blanked display with the numeral 1 in the most significant digit position.

(32) **V**
Illuminated when display units are volts.

(33) **mV**
Illuminated when display units are millivolts.

(34) **μV**
Illuminated when display units are microvolts.

(35) **%**
Illuminated when display units are percent.

(36) **RMT**
Illuminated when the AA 5001 is in the remote state or the remote with lockout state.

(37) **ADRS**
Illuminated when the AA 5001 is talk or listen addressed.

(38) **dBm**
Illuminated when display units are dBm.

Scan by Zenith

(39) **dB**
Illuminated when display units are dB.

Instrument Connections

To make connections to the AA 5001, refer to Fig. 2-3. Connections can be made to the rear interface connector. However, low level or distortion measurements made through the rear interface may be degraded due to crosstalk. To measure signals connected to the front panel make certain the INPUT pushbutton is out. To select the rear interface signal input press the INPUT pushbutton.

CAUTION

Maximum front panel input voltage is 300 V peak, 200 V rms either input to ground or differentially. Maximum rear interface input is 42 V peak and 30 V rms.

The AA 5001 input circuitry is protected against accidental overloading. This circuitry will recover without damage from continuous 120 V rms (30 minutes at 200 V rms) overloads in any INPUT RANGE setting.

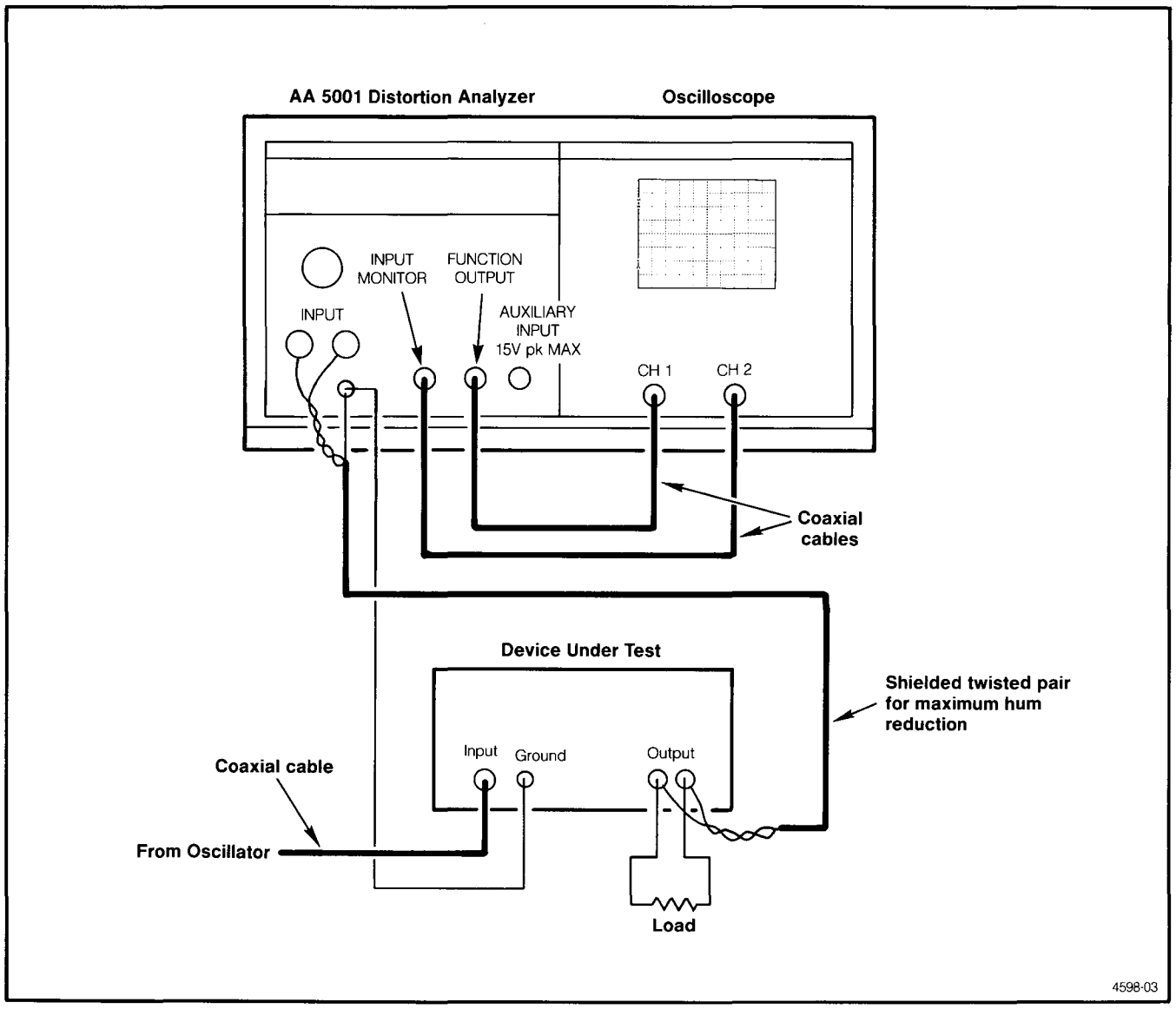

Fig. 2-3. Typical connections for distortion measurements.

Scan by Zenith

In most cases, for maximum hum rejection, follow the cabling and grounding as shown in the figure. Shielded, twisted pair offers maximum hum and radio frequency interference rejection. Cable shielding, if used, should be grounded only at the AA 5001 front panel ground post. Use shielded cable to connect the output of an oscillator, external to the device under test, to the input of the device. Generally, to avoid possible ground loops, if the device under test has one side of the input grounded, float the output of the external oscillator. If the input to the device under test is floating (not chassis grounded) select the grounded mode for the output of the oscillator. Terminate the output of the device under test in its recommended load impedance, or the load impedance specified in the appropriate standard.

Figure 2-3 shows an optional oscilloscope for visual monitoring. If connected as shown, channel 1 displays a sample of the input signal and channel 2 displays the distortion components when in the IM or THD+N function.

Level Measurements

In the LEVEL function the AA 5001 operates as a wide band ac voltmeter. The Specification section of this manual contains the operating parameters. The meter is rms calibrated and either rms or average (quasi-peak in option 02 instruments) responding, depending on the position of the RESPONSE pushbutton.

Press the FUNCTION LEVEL pushbutton. The top three buttons to the left of the FUNCTION pushbuttons select readout units as VOLTS, dBm 600 Ω, or dB RATIO. For example, to measure voltage, press the VOLTS pushbutton. If the INCREASE RANGE LED is illuminated, adjust the INPUT LEVEL RANGE control to the higher ranges until the LED goes out. (With the AA 5001 in the remote state, the INPUT RANGE automatically goes to the AUTO RANGE position irrespective of the actual switch position.) If the DECREASE RANGE LED is illuminated, turn the INPUT RANGE control counterclockwise until the DECREASE RANGE LED goes out. Readings are usable as long as the display is not overranged however for specified accuracy the DECREASE RANGE LED must also be off. Overrange is indicated by a blank display with the numeral 1 in the most significant digit slot.

If the INPUT LEVEL RANGE switch is placed in the AUTO RANGE position, the input level is adjusted automatically. The LED's (VOLTS, mVOLTS or uVOLTS) automatically illuminate showing the proper display units. Notice that the three most sensitive ranges on the INPUT LEVEL RANGE control operate in the LEVEL FUNCTION only.

When the dBm 600 Ω pushbutton is pressed, the LED opposite dBm on the display indicates the display units. The reference level for this measurement, 0 dBm, is 0.7746 V corresponding to 1 mW dissipated in 600 ohms. The INPUT LEVEL RANGE switch operates as previously described.

The dB RATIO mode permits direct amplitude ratio measurements of two input signals. When the dB RATIO pushbutton is pressed, the LED opposite the dB nomenclature on the display illuminates. To use this feature, press the dB RATIO pushbutton. To establish the input signal as 0 dB reference, push the PUSH TO SET 0 dB REF pushbutton and notice that the display reads all zeros. Release the 0 dB REF pushbutton. As the amplitude of the input signal is changed, the display reads the dB ratio of the input signal to the reference signal amplitudes.

There are many useful applications for the dB RATIO mode in measurements of gain-loss, frequency response, S/N ratio, etc. For example, the corner frequency of a filter may be quickly checked. Set the test frequency to some midband value and set the zero dB reference. Adjust the test frequency until the display reads −3.0 dB; this is the corner frequency of the filter.

Gain measurements may be simplified by using this feature. Set the device to be tested as desired and connect the AA 5001 input to the input of the device under test. Press the PUSH TO SET 0 dB REF pushbutton. Then connect the input of the AA 5001 to the device output and read the gain or loss directly from the display.

When measuring signal to noise ratio or making noise level measurements, it is often desireable to employ a frequency dependent weighting network. The AA 5001 provides several internal filters, as well as facilities for connecting external filters. For information on their operation and use, see the text under Filters in this section of this manual.

Distortion Measurements

Distortion is a measure of signal impurity. It is usually expressed as a percentage or dB ratio of the undesired components to the desired components. Harmonic distortion is simply the presence of harmonically related or integral multiples of a single pure tone called the fundamental, and can be expressed for each particular harmonic. Total harmonic distortion, or THD, expresses the ratio of the total power in all significant harmonics to that in the fundamental.

A distortion analyzer removes the fundamental of the signal investigated and measures the remainder. See Fig. 2-4. Because of the notch filter response, any signal other than the fundamental influences the measurement.

Scan by Zenith

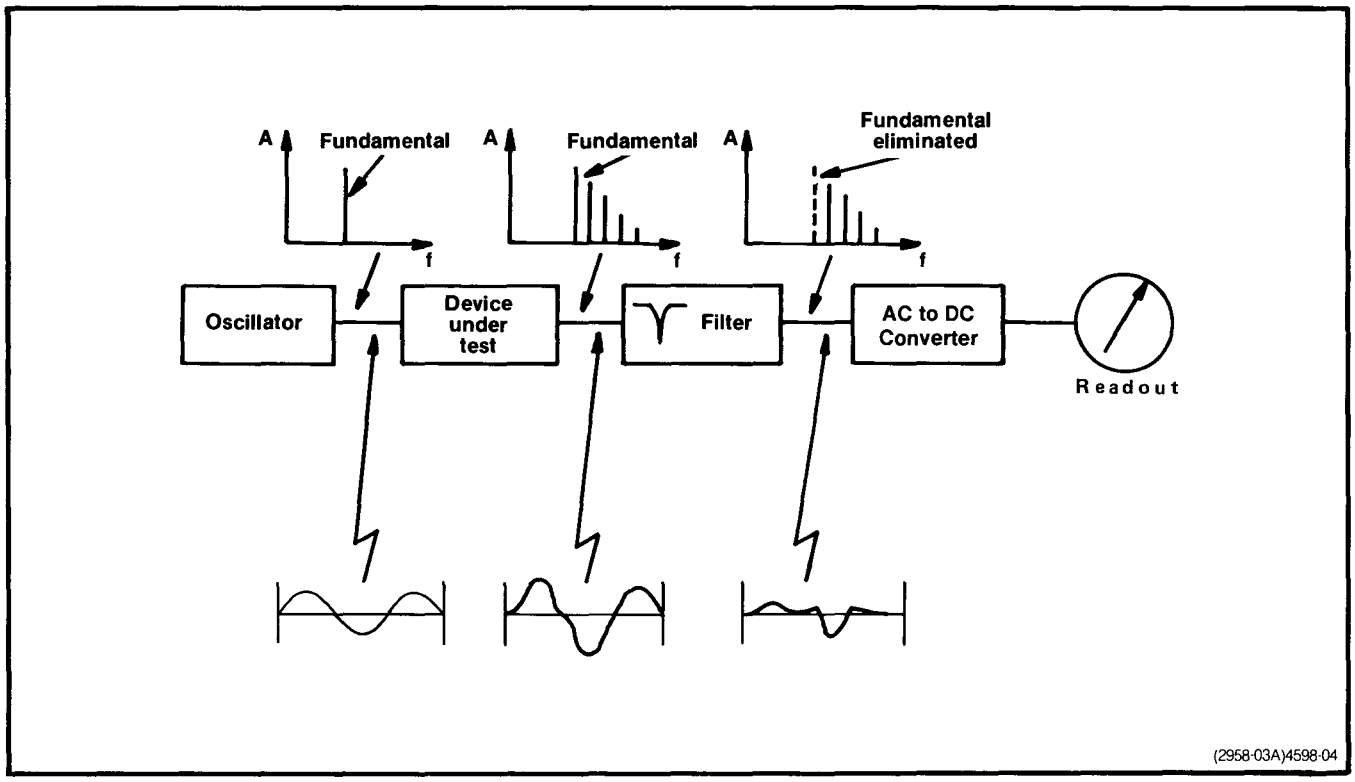

Fig. 2-4. Block diagram of a basic harmonic distortion analyzer.

A total harmonic distortion measurement inevitably includes effects from noise or hum. The term THD+N has been recommended[1] to distinguish distortion measurements made with a distortion analyzer from those made with a spectrum analyzer. A spectrum analyzer allows direct measurement of each harmonic. However, it is relatively complex, time consuming, and requires interpretation of a graphic display.

Distortion analyzers can quantify the nonlinearity of a device or system. The transfer (input vs output) characteristic of a typical device is shown in Fig. 2-5. Ideally this is a straight line. A change in the input produces a proportional change in the output. Since the actual transfer characteristic is nonlinear, a distorted version of the input waveshape appears at the output. The output waveform is the projection of the input sine wave on the device transfer characteristic as shown in Fig. 2-6. The output waveform is no longer sinusoidal, due to the nonlinearity of the transfer characteristic. Using Fourier analysis it can be shown that the output waveform consists of the original input sine wave, plus sine waves at integer multiples of the input frequency. These harmonics represent nonlinearity in the device under test. Their amplitudes are related to the degree of nonlinearity.

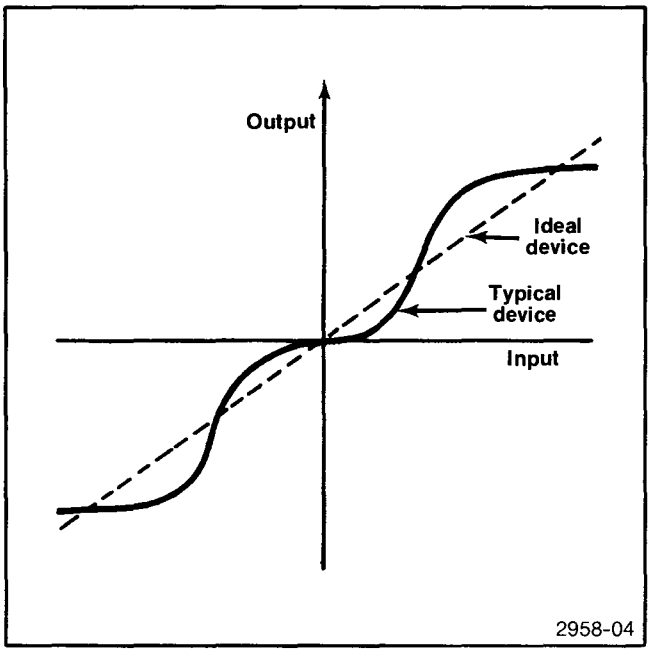

Fig. 2-5. Transfer characteristics of an audio device.

Distortion Measurement Procedure

All of the controls found on a traditional distortion analyzer are automated on the AA 5001. It is only necessary to

[1]**IHF-A-202 1978, Standard Methods of Measurement for Audio Amplifiers, The Institute of High Fidelity, Inc., 489 Fifth Avenue, New York, N.Y. 10017**

Scan by Zenith

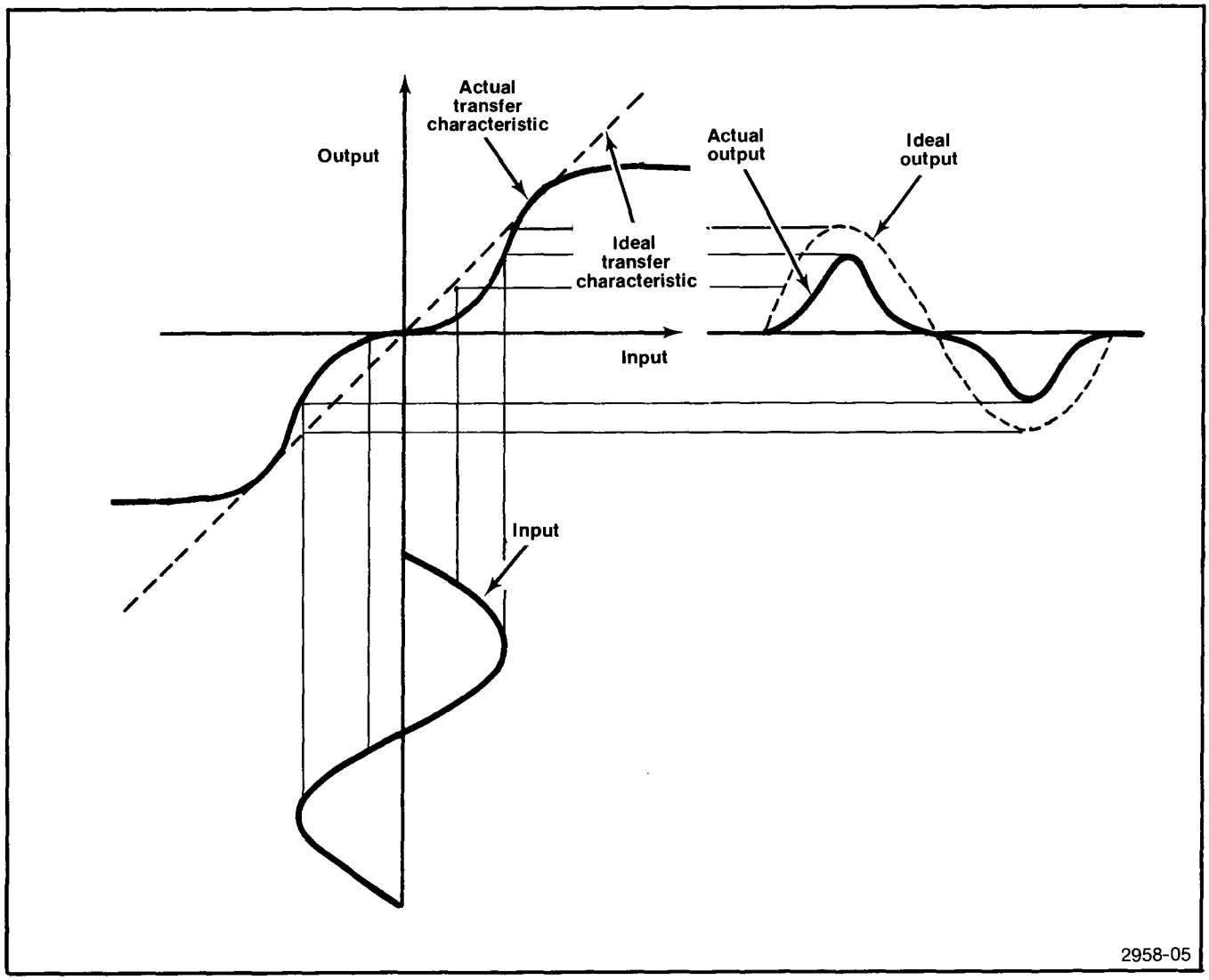

Fig. 2-6. THD test of transfer characteristics.

set the INPUT RANGE and distortion range switches to AUTO RANGE. Press THD+N and wait briefly for a reading.

Minimum input signal amplitude for valid distortion measurements is 60 mV. To provide greater flexibility, the instrument may be manually operated as described in the following paragraphs.

Adjustment of the input level range control is the same as for level measurements. Manually setting the INPUT RANGE control to the correct scale ensures that the input is within the 10 to 12 dB range of the internal auto set-level circuitry. The range LED's must be extinguished to make readings to specified accuracy. The 200 μV, 2 mV and 20 mV ranges do not operate in the distortion function and a flashing Decrease Range LED indicates insufficient input signal level for distortion measurements.

To manually select a distortion range, press the THD+N button and the desired range button. Selection of AUTO RANGE causes the instrument to autorange the distortion readout. (With the AA 5001 in a remote state, the distortion range automatically goes to the AUTORANGE position, irrespective of the actual switch positions.) The remaining range pushbuttons cause the instrument to stay in these ranges without autoranging. This may reduce the measurement time slightly if the approximate reading is already known. This is useful in production line testing or in the testing of low distortion equipment. The dB display is effectively a single range; however, internal instrument operation is identical to AUTO RANGE.

Scan by Zenith

When making distortion measurements, the RESPONSE button should normally be in the RMS position. Current distortion measurement standards require the use of rms reading instruments by specifying power summation of each of the components. The AVG response may be used when making comparisons with readings taken with older distortion analyzers. However, it may read up to 25% (2 dB) lower than rms response when noise is significant and even lower with high crest factor distortion signals (characteristic of crossover or hard-clipping non-linearities).

For frequencies below 20 kHz, the residual wideband noise in the measurement may be reduced by activating the 80 kHz LO PASS filter. If hum (line related components) are interfering with the measurement, they may be reduced with the 400 Hz HI PASS filter. This filter should not be employed with fundamental frequencies below approximately 400 Hz because of additional error due to rolloff. For more information see text under Filters in this section of this manual.

High Distortion Measurement Limitations

NOTE

Care must be taken to ensure proper locking for input signals with 10% or greater noise or non-harmonic components, because the AA 5001 automatically tunes and nulls out the fundamental frequency prior to making a THD+N measurement.

In those applications which require higher THD+N measurements (for example, SINAD[2] testing) the internal circuitry will remain locked to noise levels of approximately 30%, after it is initially given a clean signal. To perform a SINAD test, the receiver under test is first given a high level modulated rf input. The AA 5001 will lock onto the audio signal at the demodulated output. The rf level feeding the receiver is then reduced until a −12 dB (25%) THD+N reading is obtained on the AA 5001 and becomes a measure of the receiver's sensitivity.

[2]Defined in Electronic Industries Association Standard No. RS 204A, July 1972, Electronic Industries Association, Engineering Department, 2001 Eye St. N.W., Washington, D.C. 20006.

IM Distortion Measurements

Another measurement of distortion investigates the interaction of two or more signals. Many tests have been devised to measure this interaction. Three common standards are SMPTE[3], DIN[4], and CCIF[5]. The AA 5001 is capable of automatically selecting and performing all three tests.

To measure intermodulation distortion (IM), according to SMPTE and DIN standards, the device under test is excited with a low frequency and high frequency signal simultaneously (Fig. 2-7). The output signal is high-pass filtered to remove the low frequency component. The high frequency tone is then demodulated, as an AM radio signal. The demodulator output is low-pass filtered to remove the residual carrier (high frequency) components. The amplitude of the low frequency modulation is displayed as a percentage of the high frequency level.

As shown in Fig. 2-8, when this composite signal is applied to the device, the output waveform is distorted. As the high frequency tone is moved along the transfer characteristic by the low frequency tone, its amplitude changes. This results in low frequency amplitude modulation of the high frequency tone. This modulation is apparent in the frequency domain as sidebands around the high frequency tone. The power in these sidebands represents nonlinearity in the device under test.

The amplitude ratio of low to high frequencies should be between 4:1 and 1:1. The AA 5001 circuitry automatically adjusts calibration to compensate for the selected test signal ratio. Some additional range is provided in this circuitry to enable measurement of devices with nonflat frequency response.

SMPTE standard test frequencies are 60 Hz and 7 kHz. The DIN standard is virtually identical to the SMPTE standard except for the two frequencies used. They may be any pair of octave band center frequencies, with the upper at least eight times as high as the lower (250 Hz and 8 kHz are most common). The AA 5001 can accept a wide range of test frequencies as shown in the Specification section.

[3]Society of Motion Picture and Television Engineers, Standard No. TH 22.51, 862 Scarsdale Avenue, Scarsdale, N.Y. 10583.

[4]Deutsches Institut fur Normung e V, No. 45403 Blatt 3 and 4, January 1975, Beuth Verlag GmbH, Berlin 30 and Koln 1.

[5]International Telephone Consultative Committee.

Scan by Zenith

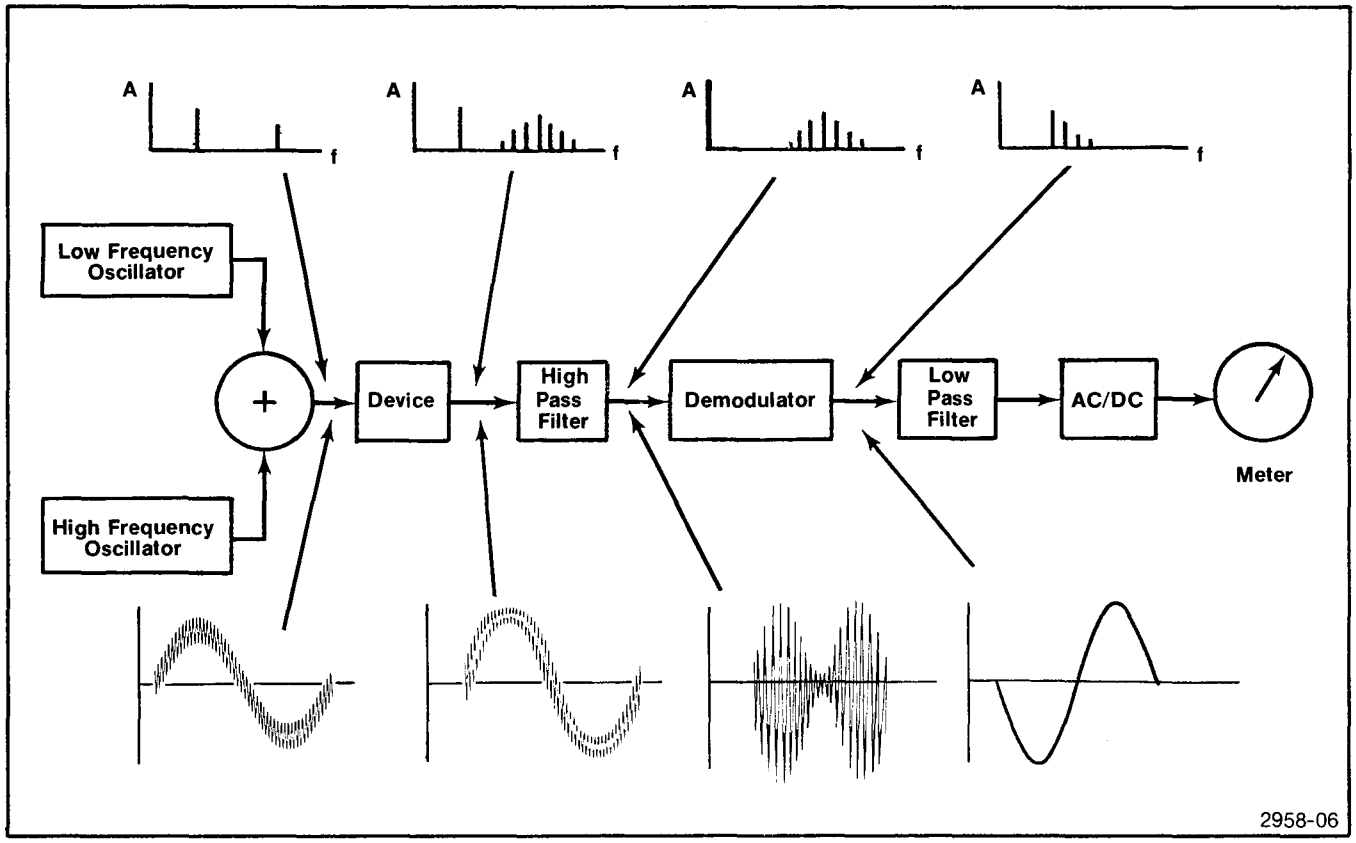

Fig. 2-7. Block diagram of basic IM analyzer.

CCIF difference frequency distortion is measured with two high frequency sine waves driving the device under test. Both are of equal level and closely spaced in frequency. Nonlinearities in the device under test cause the sine waves to cross modulate. This creates new signals at various sum and difference frequencies from the inputs. For example, the commonly used 14 kHz and 15 kHz test frequencies produce 1 kHz, 13 kHz, 14 kHz, 15 kHz, 16 kHz, 28 kHz, etc. The user could measure each new component with a tunable filter such as a spectrum analyzer; however, this is usually limited to an 80 dB dynamic range and is very tedious. In many systems and especially those with asymmetric non-linearities, a good measure of this distortion may be obtained by investigating only the difference frequency (in this example 1 kHz). If only the low frequency component is measured, it is called a CCIF second order difference frequency distortion test.

To measure two tone difference frequency distortion the device is excited with two input signals as described above. The output of the device is low-pass filtered to remove the two test tones and extract the difference frequency product. The level of this component is expressed as a percentage of the high frequency signals. The AA 5001 CCIF difference frequency mode will accept any pair of input frequencies which are within limits as listed in the Specification section. The amplitudes of the two signals should be equal.

IM Distortion Measurement Procedure

Intermodulation and THD testing are similar, using the AA 5001. After connecting the appropriate signal source to the device under test, set the INPUT RANGE as described in the THD section. Press the IMD FUNCTION button and select a distortion range. Selecting AUTO RANGE or dB provides automatic ranging. The AA 5001 accepts either a SMPTE, DIN, or a CCIF difference frequency test signal. Selection between the necessary analyzing circuits is accomplished automatically for IMD levels less than 20%, based upon the spectral content of the test tones. (There is a moveable jumper inside the AA 5001 to allow defeating the automatic test selection circuitry for special applications requiring IMD measurments in excess of 20%. Refer any jumper changes to qualified service personnel.)

The LO PASS and BAND PASS filters may be selected in the IM mode but will have little or no effect. The 400 Hz HI PASS and the WEIGHTING filters will cause erroneous readings because the IM components of interest generated by the tests fall between 50 Hz and 1 kHz. These filters,

Scan by Zenith

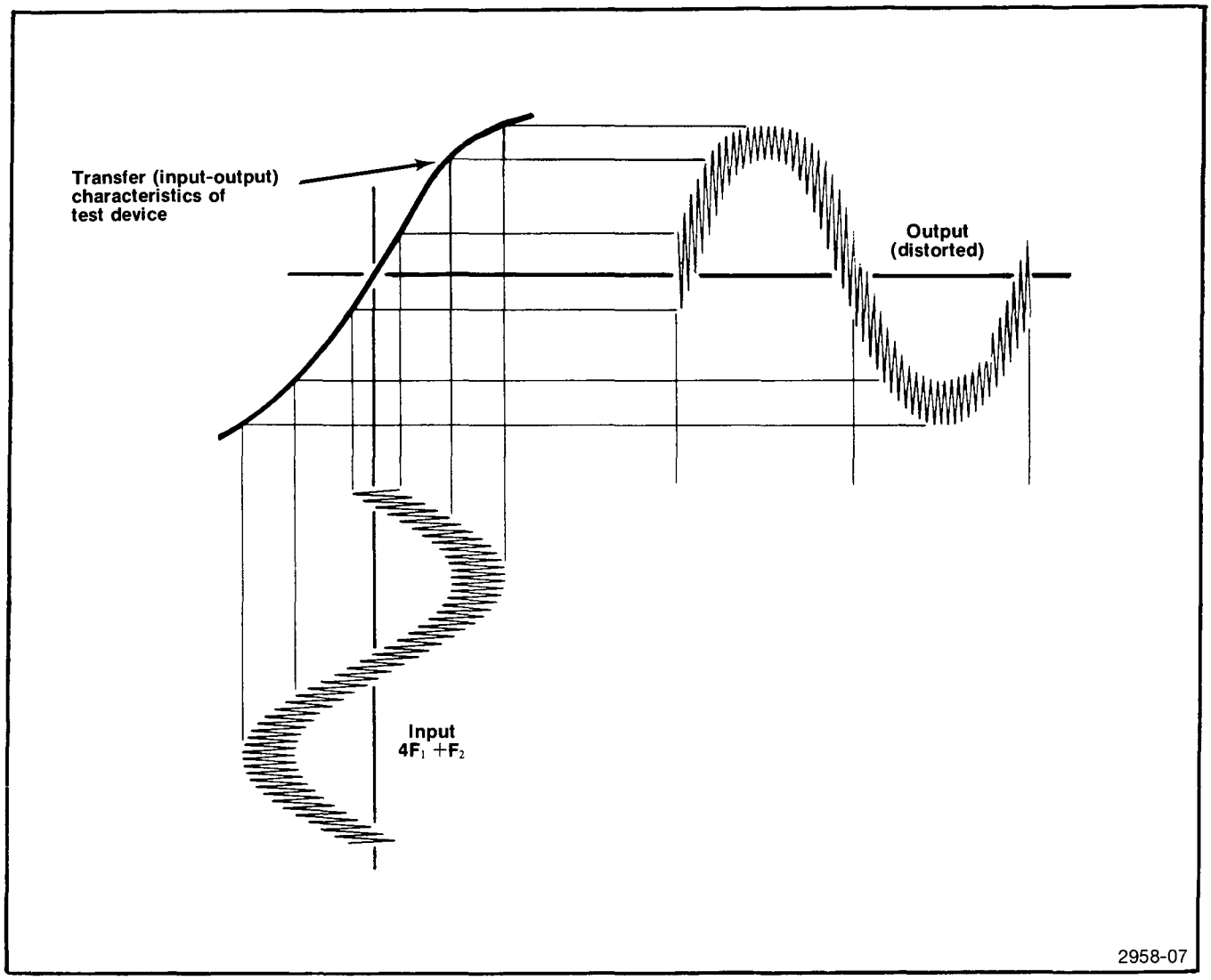

Fig. 2-8. IM test of transfer characteristics in time and frequency domain.

when activated in the IM mode may attenuate some of the frequency components being measured and should be avoided.

Filters

The five buttons along the right edge of the instrument allow selection of four built-in frequency weighting filters plus an external filter, as desired. See Fig. 2-9 for response curves of the various filters. The 400 Hz, and 80 kHz filters are both 3-pole (18 dB per octave rolloff) Butterworth alignment. The AUDIO BAND PASS filter follows CCIR Recommendation 468-2[6] for unweighted response. It is approximately two pole response below the lower 3 dB point of 22.4 Hz and three pole response above the upper 3 dB point of 22.4 kHz. They are placed in the measuring circuitry immediately before the average or rms detectors. These filters are functional in all modes of operation. They also affect the signal at the FUNCTION OUTPUT connector.

[6]International Radio Consultative Committee.

Check the position of all filter pushbuttons before making measurements, to prevent inaccurate results. Filtering takes place after all gain circuits. Therefore, it is possible to overload part of the instrument, when operating in the manual distortion ranges with a filter selected, even though the display is not overranged. This may be checked by releasing the filter pushbuttons and checking the display for overrange or by pressing the AUTO RANGE pushbutton.

The 400 Hz HI PASS filter is used to reduce the effects of hum on the measurement. Although the differential input and common mode rejection of the AA 5001 reduce the effects of ground loops, extremely bad measurement conditions may require use of this filter. The device under test may also generate an undesirable amount of hum, limiting the noise and distortion residuals obtainable. This filter may be used when measuring harmonic distortion of signals at about 400 Hz or greater, but should not be used when mea-

Scan by Zenith

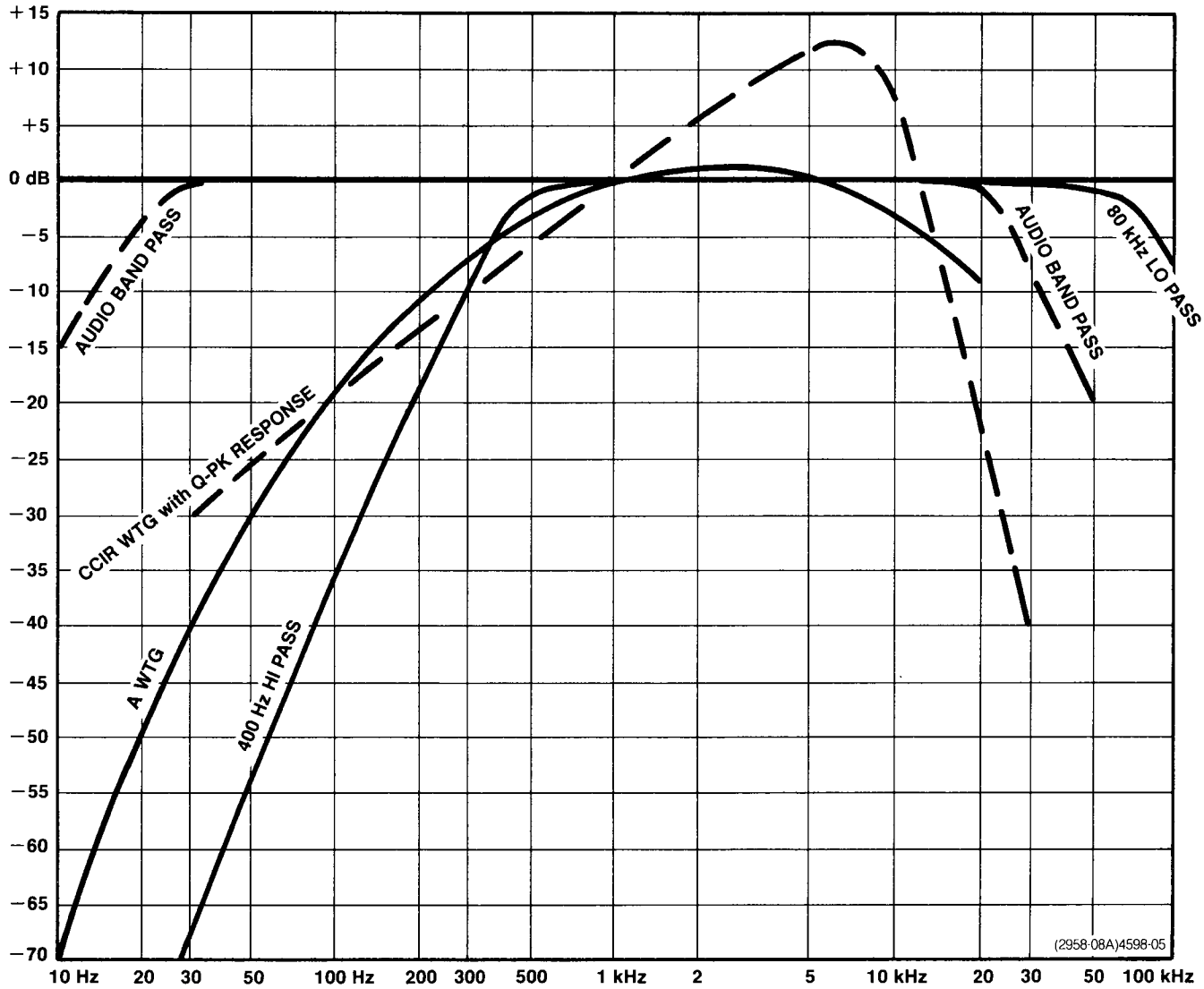

Fig. 2-9. Response curves for AA 5001 filters.

suring levels at frequencies less than 1 kHz, nor when measuring intermodulation distortion.

Use of the 80 kHz LO PASS filter reduces the effects of wideband noise and permits measurement of lower THD+N for input signals up to 20 kHz. For 20 kHz inputs, it allows measurement of harmonics up to the fourth order. Do not use this filter if harmonic components above 80 kHz are of interest. When checking noise, the 80 kHz filter may be used to reduce the measurement bandwidth. However, for most noise measurements, the AUDIO BANDPASS or WEIGHTING filters are recommended as they correlate better with the perceived noise level.

The AUDIO BAND PASS filter provides bandwidth limiting according to CCIR Recommendation 468-2 and DIN 45405. It is also useful for unweighted measurements on certain accoustic equipment. When the AUDIO BAND PASS filter is used, the 80 kHz filter is disabled.

It may be desirable to modify the high frequency cutoff of the AUDIO BAND PASS filter to 30 kHz for certain broadcast proof of performance testing or as desired for other special purposes. This may be performed by qualified service personnel as described in the Service section of this manual.

Scan by Zenith

The 'A' weighting filter (standard instruments only) is used when measuring the subjective noise of audio equipment. It conforms to the noise measurement standards of the Institute of High Fidelity (IHF). The filter shape is within ANSI, DIN, and IEC[7] standards for class 1 sound level meters.

The CCIR weighting filter (option 02 instruments only) is also used when measuring the subjective noise of audio equipment, however it conforms to CCIR Recommendation 468-2 and DIN 45405 when used with the quasi-peak detector response. This filter may also be used with the rms detector, however the gain calibration is shifted for unity gain at 2.0 kHz instead of 1.0 kHz permitting noise measurements similar to those proposed by Dolby et al[8] on tape recording and playback systems.

Connections for an external filter are also provided. Press the EXT FILTER pushbutton. Connect the external filter between the FUNCTION OUTPUT and the AUXILIARY INPUT. One application for the external filter is selective measurement of individual harmonics or components of an input signal. This may be accomplished using a unity gain bandpass filter as an external filter[9] and adjusting the frequency to the harmonic desired.

Displays

The AA 5001 provides two display forms for manual measurements. The digital readout displays the selected function with units. Overrange indication blanks all digits and displays a numeral 1 in the most significant digit slot.

For rapid nulling or peaking applications, the digital display is supplemented by an uncalibrated LED bar graph for an analog meter-like display. The bar graph responds logarithmically, with each segment representing approximately a 2.5 dB change in the selected function. Additionally, the intensity of the segments is modulated between steps permitting resolution of changes as small as 0.5 dB. The range of the bar graph is determined by the measurement range in use. When using this feature it may be desirable to select a manual range to prevent confusing displays caused by autoranging.

[6]International Radio Consultative Committee.

[7]International Electrotechnical Commission, Publication 179, second edition, Precision Sound Level Meters, 1973, Central Office of EIC (sales department), 1, rue de Varembe', 1211 Geneva 20 Switzerland.

[8]Dolby et al, CCIR/ARM: A Practical Noise-Measurement Method, Journal of the Audio Engineering Society, Vol. 27, No. 3, March 1979, p. 149.

[9]International Radio Consultive Committee.

Monitoring

The interface capabilities of the AA 5001 may aid considerably in the interpretation of measurements.

The INPUT MONITOR connector provides a fixed amplitude version (approximately equal to 1 V rms) of the input signal for input signals of 50 mV or greater. This allows display of the input signal on an oscilloscope, without constantly readjusting the oscilloscope sensitivity. At input levels below about 50 mV the INPUT MONITOR signal is approximately 26 dB (gain of approximately equal to 20) above the input signal level.

The FUNCTION OUTPUT is taken after the distortion measurement and high gain amplifier circuitry. It can be used for monitoring the signal read on the display. The signal at the FUNCTION OUTPUT connector is 2 V for a full scale reading on the display. In the level function this connector becomes an amplified version of the input signal. The gain from the input to this output is dependent on the LEVEL RANGE switch, and is given in Table 2-1. When the AA 5001 is used as a constant gain differential amplifier the INPUT RANGE switch must be set to a fixed range. In the distortion function this output can be displayed on an oscilloscope to view the distortion components. This output may also be used to drive a spectrum analyzer or selective voltmeter for examining the individual harmonics or modulation products. When an oscilloscope is used, the triggering signal is best taken from the sync output on the oscillator. If this is not possible (for example in tape recorder or Telco link testing) it should be obtained from the INPUT MONITOR connector on the AA 5001.

Table 2-1
Gains from INPUT terminals to FUNCTION OUTPUT connector for various settings of the INPUT LEVEL RANGE control

LEVEL RANGE Setting	Gain to FUNCTION OUTPUT
200 V	−40 dB
60 V	−30 dB
20 V	−20 dB
6 V	−10 dB
2 V	0 dB
600 mV	+10 dB
200 mV	+20 dB
20 mV	+40 dB
2 mV	+60 dB
200 μV	+80 dB

Scan by Zenith

One interesting use of the Function Output and Input Monitor signals is to investigate the non-linearities of the transfer function of a device under test with the THD+N mode. For this measurement, the FUNCTION OUTPUT drives the vertical input of an oscilloscope while the INPUT MONITOR drives the horizontal. The resulting display is similar to Fig. 2-10, and represents the deviation from linearity of the transfer characteristic. In other words, it represents the transfer characteristic after the best fit straight line is removed. This can be particularly useful in diagnosing sources of non-linearity such as clipping, crossover, etc. If the device under test has large amounts of phase shift at the test frequencies it may be necessary to introduce compensating phase shift into the horizontal channel. Since the FUNCTION OUTPUT is taken after the filters, they will affect the signal seen at this connector. The vertical scale is the deviation from the best fit line and is related to the distortion range and vertical sensitivity of the oscilloscope.

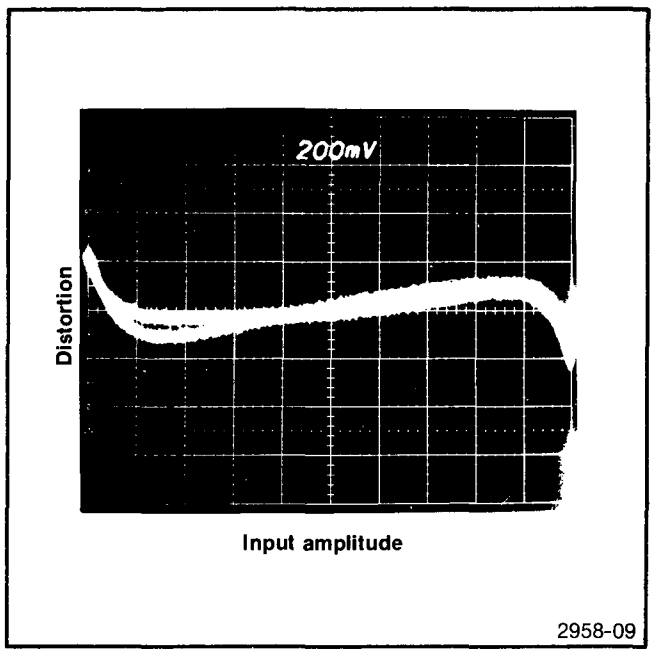

Fig. 2-10. Oscilloscope display of deviation from linearity.

Scan by Zenith

WARNING

THE FOLLOWING SERVICING INSTRUCTIONS
ARE FOR USE BY QUALIFIED PERSONNEL
ONLY. TO AVOID PERSONAL INJURY, DO NOT
PERFORM ANY SERVICING OTHER THAN THAT
CONTAINED IN OPERATING INSTRUCTIONS
UNLESS YOU ARE QUALIFIED TO DO SO.
REFER TO OPERATORS SAFETY SUMMARY
AND SERVICE SAFETY SUMMARY PRIOR TO
PERFORMING ANY SERVICE.

Scan by Zenith

PROGRAMMING

Introduction

This section of the manual provides information for programming the AA 5001 by remote control via the digital interface. In this manual the digital interface is called the IEEE-488 General Purpose Interface Bus (GPIB). The following information assumes the reader is knowledgeable in GPIB communications and has some exposure to programming controllers. Communication via the GPIB is specified and described in the IEEE Standard 488-1978, Standard Digital Interface for Programmable Instrumentation[a]. TM 5000 instruments are designed to communicate with any GPIB-compatible controller that sends and receives ASCII messages (commands) over the GPIB. These commands program the instrument or request information from the instrument.

Commands for TM 5000 programmable instruments are designed for compatibility among instrument types. The same command is used in different instruments to control similar functions. In addition, commands are specified in mnemonics related to the functions they implement. For example, the command INIT initializes instrument settings to their power-up states.

Instrument commands are presented in three formats:

- A front panel illustration—showing command relationships to front panel operation. See Fig. 3-1.
- Instrument Command List—A list divided into functional groups with brief descriptions.
- Detailed Command List—An alphabetical listing of commands with complete descriptions.

TM 5000 programmable instruments connect to the GPIB through a TM 5000 power module. Refer to the Operating Instructions section of this manual for information on installing the instrument in the power module. Also review this section to become familiar with front-panel and internally selectable instrument functions.

GPIB Address and Terminator Setting

The GPIB primary address for this instrument is set on the rear panel. The AA 5001 is shipped with the address set to decimal 28. The message terminators may also be selected. Message terminators are discussed in Messages and Communication Protocol (in this section). TM 5000 instruments are shipped with this terminator set to EOI ONLY. Refer qualified personnel to the Maintenance section of this manual for locations and setting information.

[a] Published by the Institute of Electrical and Electronics Engineers, Inc., 345 East 47th Street, New York, NY, 10017

Scan by Zenith

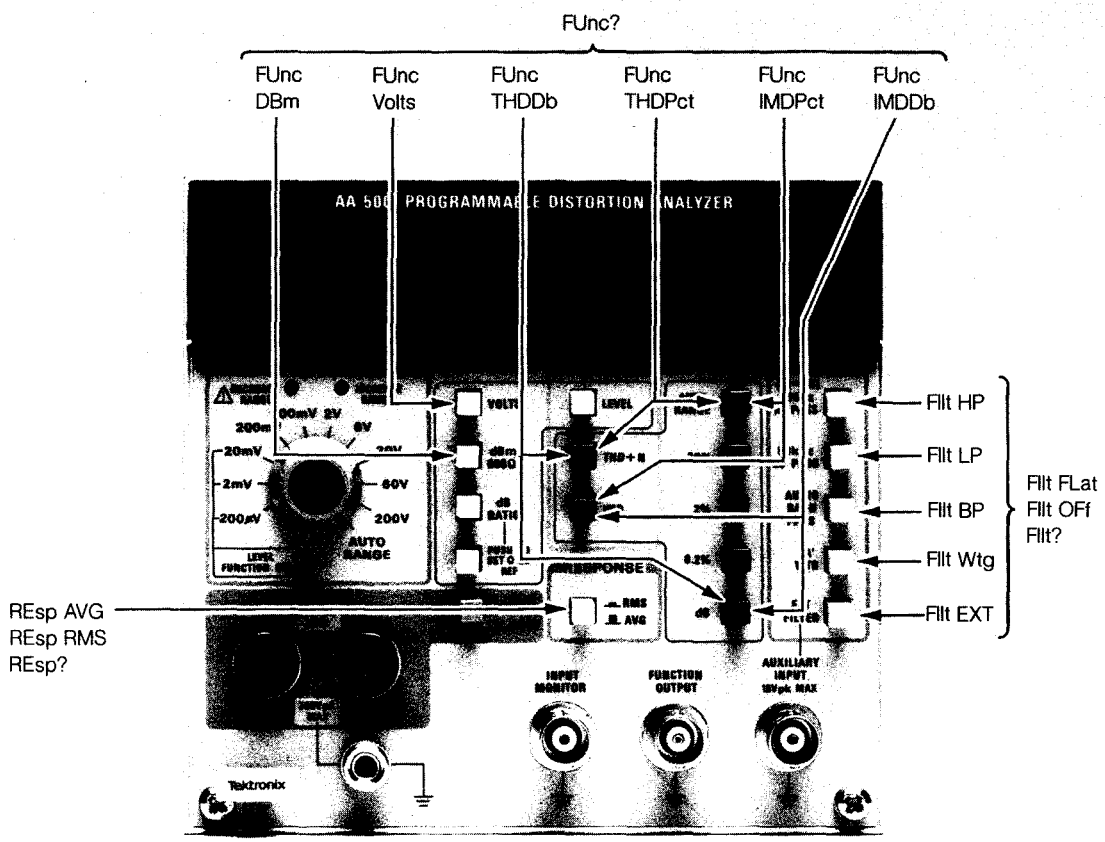

General

Counts	FPset	OPc ON	RQs ON
Counts?		OPc OFF	RQs OFF
	Help	OPc?	RQs?
DUs ON		OVer ON	
DUs OFF	ID?	OVer OFF	SENd
DUs?	INit	OVer?	SET?
ERRMsg		Points <num>	TEst
ERR?		Points?	TOI <num>
EVent?			TOI?

4598-06

Fig. 3-1. AA 5001 commands and relationships to front panel controls. See command lists for descriptions.

Scan by Zenith

COMMANDS

The commands for the AA 5001 can be classified in three categories:

Setting Commands—Control Instrument Settings

Query-Output Commands—Ask For Data

Operational Commands—Cause a particular action

The instrument responds to and executes all commands when in the remote state. In the local state setting and operational commands generate errors as the instrument is under front panel control. Only query-output commands are executed in this mode.

Each command begins with a header—a word that describes the function implemented. Many commands require an argument following the header—a word or number which specifies the desired state.

NOTE

Brackets [] indicate the enclosed item is optional, and carets <> indicate a defined element. Capitalized letters are the required characters; the lower case letters may also be used.

Instrument Commands

Counts <num>—Sets the display counts window for the settling algorithm.

Counts?—Returns the COUNTS setting.

DUs [ON]—Delays the SEND command until settled.

DUs OFf—Does not delay the SEND command until settled.

DUs?—Returns DUS ON or DUS OFF.

ERRMsg?—Same action as ERR? but includes a description string in the query response.

ERRor?—Returns the error code for the most recent error reported by serial poll when RQS is ON or the highest priority event when RQS is OFF.

EVent?—Same action as ERR?

[FIlters] BPass—Enables bandpass filter.

[FIlters] EXternal—Enables external filter.

[FIlters] FLat—Disables all filters.

[FIlters] HPass—Enables high pass filter.

[FIlters] Lpass—Enables low pass filter.

FIlters OFf—Disables all filters.

[FIlters] Wtg—Enables weighting filter.

FIlters?—Returns the state of all programmable filters.

FPset—Sets to front panel settings while under remote control.

[FUnction] DBm—Selects level measurement in decibels relative to 0.775 volts.

[FUnction] IMDDb—Selects intermodulation distortion measurement in decibels.

[FUnction] IMDPct—Selects intermodulation distortion measurement in percent.

[FUnction] THDDb—Selects total harmonic distortion measurement in decibels.

[FUnction] THDPct—Selects total harmonic distortion measurement in percent.

Scan by Zenith

[FUnction] Volts—Selects level measurement in rms volts.

FUnction?—Returns the type of measurement selected.

HElp?—Returns a list of command headers.

IDentify?—Returns instrument identification and firmware version.

INit—Returns instrument to initial settings.

OPc [ON]—Enables operation complete service request.

OPc OFf—Disables operation complete service request.

OPc?—Returns OPC ON or OPC OFF.

OVer [ON]—Enables reporting of display overrange, insufficient input level, excessive input level and unsettled service requests.

OVer OFf—Disables reporting of display overrange, insufficient input level, excessive input level and unsettled service requests.

OVer?—Returns OVER ON or OVER OFF.

Points <num>—Sets the number of sample points for the settling algorithm.

Points?—Returns the POINTS setting.

[REsponse] AVG—Selects average response (standard instrument only).

[REsponse] AVE—Selects average response (standard instrument only).

[REsponse] RMs—Selects rms response.

[REsponse] Qpk—Selects quasi-peak response (Option 02 only).

REsponse?—Returns AVG (QPK for Option 02) or RMS response.

RQs [ON]—Enables generation of service requests.

RQs OFf—Disables generation of service requests.

RQs?—Returns RQS ON or RQS OFF.

SENd—Returns a measurement.

SETtings?—Returns all programmable settings.

TEst?—Executes ROM test and returns 0 if test passes or 394 if test fails.

TOlerance <num>—Sets the tolerance window for the settling algorithm in percent.

TOlerance?—Returns the TOLERANCE setting.

Scan by Zenith

DETAILED COMMAND LIST

NOTE

Brackets [] indicate the enclosed item is optional, and carets <> indicate a defined element. Capitalized letters are the required characters; the lower case letters may also be used.

COUNTS

Type:

Setting or Query

Setting Syntax:

Counts <numeric>

Arguments:

Any floating point value from 0 to 2000

Examples:

Counts 20
Counts 4.5
Counts 1.2E+2
Counts 32.05E−2

Query Syntax:

Counts?

Query Response:

Counts <numeric>;

Discussion:

The COUNTS command sets the settling algorithm window in units of display counts. Refer to SETTLING ALGORITHM in this section.

The COUNTS query returns the COUNTS setting.

The Power-up and INIT setting is COUNTS 2.0.

DUS (DELAY UNTIL SETTLED)

Type:

Setting or Query

Setting Syntax:

DUs [ON]
DUs OFF

Query Syntax:

DUs?

Query Response:

DUS ON;
or
DUS OFF

Discussion:

The DUS command tells the SEND command to delay sending a measurement until settling has occurred. Refer to SETTLING ALGORITHM and SEND in this section.

The Power-up and INIT setting is DUS ON.

Scan by Zenith

ERRMSG (ERROR MESSAGE)

Type:

Query only

Query Syntax:

ERRMsg?

Query Response:

ERRMSG <numeric>,<string>;

Example:

ERRMSG 0,"NO STATUS";

Discussion:

The ERRMSG? query has the same action as the ERROR? query except that a brief description string is included in the query response.

ERROR

Type:

Query only

Query Syntax:

ERRor?

Query Response:

ERR <numeric>;

Discussion:

The ERROR? query is used to obtain information about the status of the instrument.

If RQS is ON, the ERROR? query returns an event code <number> describing why the RQS bit was set in the last Status Byte reported by the instrument. The event code is then reset to 0.

If RQS is OFF, the ERROR? query returns an event code <number> describing the highest priority condition currently pending in the instrument. This event code is then cleared and another ERROR? query will return the event code for the next highest priority condition pending.

Scan by Zenith

EVENT

Type:

Query

Query Syntax:

EVent?

Query Response:

EVENT <numeric>;

Discussion:

The EVENT? query has the same action as the ERROR? query.

FILTERS

Type:

Setting or query

Setting Syntax:

[FIlters] <argument>
[FIlters] <argument>,...,<argument>

Arguments:

BPass
EXternal
FLat
HPass
Lpass
OFf
Wtg

Examples:

FIlt EXt
FIlt HP
FIlt OFf
BP
FLat
HP ON
HP OFF
FIlt Lp,Wtg,EXt

Query Syntax:

FIlters?
BPass?
FLat?

Query Response:

FILT BP,EXT,HP;
FILT FLAT;

Discussion:

Each individual command enables the specified filter. FLAT and OFF disables all the filters.

NOTE

"A" WEIGHTING is used on the standard instrument only. "CCIR" WEIGHTING is used on Option 02 only. Refer to the OPERATING INSTRUCTIONS section.

Scan by Zenith

For the setting command, multiple arguments separated by commas are allowed. The arguments are processed from left to right, that is the last argument prevails.

The FILTERS heading may be omitted for all arguments except OFf unless multiple arguments are used. If the FILTERS heading is omitted, the arguments ON or OFF may be optionally used. If not used, ON is assumed.

BP, LP, and WTG are all mutually exclusive.

The FILTERS? query returns a list of the filters that are enabled.

The INIT setting is FLAT.

FPSET (FRONT PANEL SETTINGS)

Type:

Operational

Setting Syntax:

FPset

Discussion:

The FPSET command sets the AA 5001 to the front panel settings even though it is under remote control.

This is useful for allowing manually set input level and distortion ranges, as these are otherwise autoranged when in the remote state.

Any other setting command made subsequently will defeat FPset.

Scan by Zenith

FUNCTION

Type:

Setting or Query

Setting Syntax:

[FUnction] <argument>

Arguments:

DBm
IMDDb
IMDPct
THDDb
THDPct
Volts

Examples:

FUnc IMDPct
FUnc THDDb
THDPct
Volts

Query Syntax:

FUnction?[1]

Query Response:

DBM;
DBR;
IMDDB;
IMDPCT;
THDDB;
THDPCT;
VOLTS;

Discussion:

DBM selects input level measurement in decibels relative to 0.775 volts.

IMDDB selects intermodulation distortion measurements in decibels.

IMDPCT selects intermodulation distortion measurements in percent.

THDDB selects total harmonic distortion measurements in decibels.

THDPCT selects total harmonic distortion measurements in percent.

VOLTS selects level measurement in rms volts.

The use of the FUNCTION header is optional.

NOTE

DB RATIO is not programmable. References other than 0.775 volts (DBM), if needed, should be calculated by the controller.

The FUNCTION? query returns the type of measurement selected. The FUNCTION header is not returned.

The INIT setting is VOLTS.

Scan by Zenith

HELP

Type:

Query

Query Syntax:

HElp?

Query Response:

HELP AVE,AVG,BP,COUNTS,DBM,DUS,ERRMSG, ERR,EVENT,EXT,FILT,FLAT,FPSET,FUNC,HELP, HP,ID,IMDDB,IMDPCT,INIT,LP,OPC,OVER,POINTS, QPK,RESP,RMS,RQS,SEND,SET,TEST,THDDB, THDPCT,TOL,VOLTS,WTG;

Discussion:

The HELP? query returns a list of all valid command headers.

IDENTIFY

Type:

Query

Query Syntax:

IDentify?

Query Response:

ID TEK/AA5001,V81.1,Fx.y; (standard instrument only)

ID TEK/AA5001,V81.1,Fx.y,"OPTION 2"; (Option 02 only)

Discussion:

The IDENTIFY? query returns the above response where:

TEK/AA5001—Identifies the instrument type.

V81.1—Identifies the version of Tektronix Codes and Format Standard to which the instrument conforms.

Fx.y—Identifies the firmware version of the instrument, where x.y is a decimal number.

"OPTION 02"—Identifies options if any.

Scan by Zenith

INIT (INITIAL SETTINGS)

Type:

Operational

Setting Syntax:

INit

Discussion:

The INIT command performs a power-on initialization of the instrument's settings. The initialization settings for the AA 5001 are:

VOLTS
RMS
FLAT
DUS ON
POINTS 3
TOLERANCE 2.0
COUNTS 2.0
OPC OFF
OVER OFF
RQS ON

The INIT command does not generate a power-on SRQ nor does it put the instrument in LOCAL mode as power-on initialization does.

OPC (OPERATION COMPLETE SERVICE REQUEST)

Type:

Setting or Query

Setting Syntax:

OPc [ON]
OPc OFF

Query Syntax:

OPc?

Query Response:

OPC ON; or OPC OFF

Discussion:

The OPC command controls the asserting of SRQ when a measurement is completed. This command allows a controller to start a measurement, and then process some other task while waiting for an SRQ to inform it that measurement data is ready.

When OPC is ON and a measurement completes, SRQ is asserted and remains asserted until the status is read via a serial poll or until cleared by RQS OFF or a Device Clear. Operation Complete is indicated by a Status Byte of 66 or 82 and an ERROR query response of ERR 402.

Refer to STATUS AND ERROR REPORTING in this section.

The power-up and INIT setting is OPC OFF.

Scan by Zenith

OVER (OVERRANGE SERVICE REQUEST)

Type:

Setting or Query

Setting Syntax:

OVer [ON]
OVer OFF

Query Syntax:

OVer?

Query Response:

OVER ON; or OVER OFF;

Discussion:

The OVER command controls the asserting of SRQ for display overrange, insufficient level, excessive input level, and unsettled conditions.

These conditions are checked only when a measurement is attempted (see SEND command).

Refer to STATUS AND ERROR REPORTING in this section.

The power-up and INIT setting is OVER OFF.

POINTS

Type:

Setting or Query

Setting Syntax:

Points <numeric>

Arguments:

Any Floating Point Value from 2 to 6

Query Syntax:

Points?

Query Response:

POINTS <numeric>;

Discussion:

The POINTS command sets the number of sample points, 2 through 6, that must be within the settling algorithm's tolerance window for settling to occur.

The numeric argument in the setting is rounded to the nearest integer. Refer to SETTLING ALGORITHM in this section.

The POINTS? query returns the POINTS setting.

The power-up and INIT setting is POINTS 3.

Scan by Zenith

RESPONSE

Type:

Setting or query

Setting Syntax:

[REsponse] <argument>

Arguments:

AVErage (standard instrument only)
AVG (standard instrument only)
RMs
Qpk (Option 02 only)

Examples:

REsp AVE
REsp RMs
RMs

Query Syntax:

REsponse?

Query Response:

RESP AVG; or RESP RMS; (standard instrument only).

RESP QPK; or RESP RMS; (Option 02 only).

Discussion:

The RESPONSE command sets the AA 5001 for average (quasi-peak for Option 02) or rms response.

The RESPONSE query returns the RESPONSE setting.

The RESPONSE header is optional.

The power-up INIT setting is RESPONSE RMS.

RQS (REQUEST FOR SERVICE)

Type:

Setting or query

Setting Syntax:

RQs [ON]
RQs OFF

Query Syntax:

RQs?

Query Response:

RQS ON or OFF

Discussion:

The RQS command is a global control for assertion of SRQ by the AA 5001.

When RQS is OFF the AA5001 will not assert SRQ under any circumstance. When RQS is ON the AA5001 is allowed to assert SRQ under appropriate circumstances; i.e., errors, operation complete, etc.

The ERROR? query can be used while RQS is OFF to see if any SRQ type conditions have occurred.

SRQ will be asserted for any previously unreported SRQ event when RQS is turned ON after being OFF.

The power-up INIT setting is RQS ON.

Scan by Zenith

SEND

Type:

Output

Syntax:

SENd

Discussion:

The SEND command returns a measurement. Overrange is 1E+99. New measurements are available as the display updates at approximately three (3) reading/sec. Any display reading may be returned only once.

If the DUS is OFF, the most recent display update is returned.

If DUS is ON, the measurement must be settled before it is returned. If settling does not occur within six (6) seconds, an average of the last two (2) seconds (6 display updates) is returned.

If the OVER is ON, an unsettled SRQ is generated.

Refer to SETTLING ALGORITHM, DUS, OVER, and TALKED WITH NOTHING TO SAY RESPONSE in this section.

SETTINGS

Type:

Query

Query Syntax:

SETtings?

Query Response:

<string>;

Example:

VOLTS;RESP RMS;FILT FLAT;DUS ON;POINTS 3;TOL 1.0;COUNTS 1.0;OPC OFF;OVER OFF;RQS ON;

Discussion:

The SETTINGS? query returns the current settings of the instrument.

The SETTINGS? query response may then be used at a later time to reset the instrument back to those settings.

Scan by Zenith

TEST (ROM TEST)

Type:

Query

Setting Syntax:

TEst?

Output Response:

TEST <numeric>;

Discussion:

The TEST? query causes execution of the ROM test and returns 0 if the test passes, or 394 if the test fails.

TOLERANCE

Type:

Setting or Query

Setting Syntax:

TOlerance <numeric>

Arguments:

Any Floating Point Value from 0 to 100

Examples:

TOl 12
TOl 0.1E+2
TOl 1.5

Query Syntax:
TOlerance?

Query Response:
TOL <numeric>;

Discussion:

The TOLERANCE command sets the tolerance window in percent of the reading for the settling algorithm. Refer to SETTLING ALGORITHM in this section.

The TOLERANCE? query returns the TOLERANCE setting.

The power-up INIT setting is TOLERANCE 2.0.

SETTLING ALGORITHM

This Algorithm delays a measurement from being sent until settling has occurred. The Settling Algorithm is enabled by using the DUS ON command. A settled AA 5001 measurement is obtained by using the SEND command to return a measurement with the Settling Algorithm previously enabled.

Scan by Zenith

Settling Algorithm

This Algorithm delays a measurement from being sent until settling has occurred. The Settling Algorithm is enabled by using the DUS ON command. A settled AA 5001 measurement is obtained by using the SEND command to return a measurement with the Settling Algorithm previously enabled.

The AA 5001 is considered settled when a series of measurement points (display updates) are within a specified tolerance of each other. The tolerance window is plus or minus the sum of the values set by the TOLERANCE command (in percent of reading from 0 to 100) and the COUNTS command (in display counts from 0 to 2000). The POINTS command sets the number of measurement points (from 2 to 6) that must be within the tolerance window for settling to occur. In general, specifying as wide of a tolerance window and as few points as the accuracy of the measurement needed allows, will cause the instrument to return a valid measurement with a minimum of delay. The default settings will provide good results under most test conditions.

The defaults are:

POINTS 3
TOLERANCE 2
COUNTS 2

When enabled, the SETTLING ALGORITHM is continually collecting measurement points and keeping track of the settling status. The algorithm is initialized at the time it is enabled (anytime DUS ON is received), or when any setting command is received. Initialization means any collected measurement points are dumped. At least two (2) points will be taken after receiving the SEND command before settled status can occur. The remaining points, if needed, may have been collected before the SEND command was received, if the algorithm was enabled with sufficient time to collect these points. This ensures that the algorithm includes the effects of any system changes that were made near the time the SEND command is received, but returns a measurement sooner if the AA 5001 remains settled. The measurement returned is the most recent measurement point taken at the time settling occurs.

If settling does not occur within approximately six (6) seconds after the SEND command is received, the AA 5001 returns the average of it's last six (6) measurement points (approximately 2 seconds, in duration). This averaging allows usable measurements on signals containing low beat frequencies or noise. Additionally, if the OVER is ON, an unsettled SRQ is generated, alerting the controller that averaging has occurred.

Remote Local Exceptions

If the LEVEL, THD+N, IMD, RESPONSE and any of the filter buttons are pressed, the AA 5001 returns to local from remote operation.

Scan by Zenith

MESSAGES AND COMMUNICATION PROTOCOL

Command Separator

A message consists of one command or a series of commands, followed by a message terminator. Messages consisting of multiple commands must have the commands separated by semicolons. A semicolon at the end of a message is optional. For example, each line below is a message.

INIT
TEst;INit;RQS ON;DUS OFF;ID?;SET?
TEST;

Message Terminator

Messages may be terminated with EOI or the ASCII line feed (LF) character. Some controllers assert EOI concurrently with the last data byte. Others use only the LF character as a terminator. This instrument can be set to accept either terminator. With EOI ONLY selected as the terminator, the instrument interprets a data byte received with EOI asserted at the end of the input message; it also asserts EOI concurrently with the last byte of the output message. With the LF/EOI setting, the instrument interprets the LF character without EOI asserted (or any data byte received with EOI asserted) as the end of an input message. The AA 5001 transmits carriage return (CR) followed by line feed (the LF with EOI asserted) to terminate output messages. Refer service personnel to the Maintenance section of the manual for information on setting the message terminator. TM 5000 instruments are shipped with EOI ONLY selected.

Formatting A Message

Commands sent to the AA 5001 must have the proper format (syntax) to be understood. This format is flexible and many variations are acceptable. The following describes this format and the acceptable variations.

All commands must be encoded in upper and lower case ASCII. All data output is in upper case. See Fig. 3-2.

As previously discussed, a command consists of a header followed, if necessary, by arguments. A command with arguments must have a header delimiter which is the space character SP between the header and the argument. The space character $_{SP}$, carriage return $_{CR}$, and line feed $_{LF}$ are shown as subscripts in the following examples.

RQS_{SP} ON

If extra formatting characters SP, CR, and LF (the LF cannot be used for format in the LF/EOI terminator mode) are added between the header delimiter and the argument, they are ignored by the instrument.

Example 1: RQS_{SP} ON;
Example 2: $RQS_{SP\ SP}$ ON;
Example 3: $RQS_{SP\ CR\ LF}$
$_{SP\ SP}$ ON;

In general, these formatting characters are ignored after any delimiter and the beginning and end of a message.

$_{SP}RQs_{SP}$ ON;$_{CR\ LF}$
$_{SP}DUs_{SP}$ OFF

In the command list, some letters are capitalized and others are lower case. The capitalized letters are the minimum necessary for command recognition. However, if additional letters are added they must be the same as shown in the header. For documentation of programs, the user may add alpha characters to the full header. Alpha characters may also be added to the query header, provided the question mark is at the end.

EV?
EVe?
EVen?
EVent A?

Multiple arguments are separated by a comma; however, the instrument will also accept a space or spaces as a delimiter.

2,3
2_{SP} 3
2_{SP} 3

NOTE

In the last example, the space is treated as a format character because it follows the comma (the argument delimiter).

Number Formats

The instrument accepts the following kinds of numbers for any of the numeric arguments.

- Signed or unsigned integers (including +0 and −0). Unsigned integers are interpreted as positive. Examples: +1, 2, −1, −10.
- Signed or unsigned decimal numbers. Unsigned decimal numbers are interpreted as positive. Examples: −3.2, +5.0, .2.

Scan by Zenith

ASCII & IEEE 488 (GPIB) CODE CHART

BITS B4 B3 B2 B1	B7 B6 B5 = 0 0 0	0 0 1	0 1 0	0 1 1	1 0 0	1 0 1	1 1 0	1 1 1
	CONTROL		NUMBERS SYMBOLS		UPPER CASE		LOWER	
0 0 0 0	0 NUL 0 (0)	20 DLE 10 (16)	40 SP 20 (32)	60 0 30 (48)	100 @ 40 (64)	120 P 50 (80)	140 ` 60 (96)	160 p 70 (112)
0 0 0 1	1 GTL SOH 1 (1)	21 LLO DC1 11 (17)	41 ! 21 (33)	61 1 31 (49)	101 A 41 (65)	121 Q 51 (81)	141 a 61 (97)	161 q 71 (113)
0 0 1 0	2 STX 2 (2)	22 DC2 12 (18)	42 " 22 (34)	62 2 32 (50)	102 B 42 (66)	122 R 52 (82)	142 b 62 (98)	162 r 72 (114)
0 0 1 1	3 ETX 3 (3)	23 DC3 13 (19)	43 # 23 (35)	63 3 33 (51)	103 C 43 (67)	123 S 53 (83)	143 c 63 (99)	163 s 73 (115)
0 1 0 0	4 SDC EOT 4 (4)	24 DCL DC4 14 (20)	44 $ 24 (36)	64 4 34 (52)	104 D 44 (68)	124 T 54 (84)	144 d 64 (100)	164 t 74 (116)
0 1 0 1	5 PPC ENQ 5 (5)	25 PPU NAK 15 (21)	45 % 25 (37)	65 5 35 (53)	105 E 45 (69)	125 U 55 (85)	145 e 65 (101)	165 u 75 (117)
0 1 1 0	6 ACK 6 (6)	26 SYN 16 (22)	46 & 26 (38)	66 6 36 (54)	106 F 46 (70)	126 V 56 (86)	146 f 66 (102)	166 v 76 (118)
0 1 1 1	7 BEL 7 (7)	27 ETB 17 (23)	47 ' 27 (39)	67 7 37 (55)	107 G 47 (71)	127 W 57 (87)	147 g 67 (103)	167 w 77 (119)
1 0 0 0	10 GET BS 8 (8)	30 SPE CAN 18 (24)	50 (28 (40)	70 8 38 (56)	110 H 48 (72)	130 X 58 (88)	150 h 68 (104)	170 x 78 (120)
1 0 0 1	11 TCT HT 9 (9)	31 SPD EM 19 (25)	51) 29 (41)	71 9 39 (57)	111 I 49 (73)	131 Y 59 (89)	151 i 69 (105)	171 y 79 (121)
1 0 1 0	12 LF A (10)	32 SUB 1A (26)	52 * 2A (42)	72 : 3A (58)	112 J 4A (74)	132 Z 5A (90)	152 j 6A (106)	172 z 7A (122)
1 0 1 1	13 VT B (11)	33 ESC 1B (27)	53 + 2B (43)	73 ; 3B (59)	113 K 4B (75)	133 [5B (91)	153 k 6B (107)	173 { 7B (123)
1 1 0 0	14 FF C (12)	34 FS 1C (28)	54 , 2C (44)	74 < 3C (60)	114 L 4C (76)	134 \ 5C (92)	154 l 6C (108)	174 | 7C (124)
1 1 0 1	15 CR D (13)	35 GS 1D (29)	55 – 2D (45)	75 = 3D (61)	115 M 4D (77)	135] 5D (93)	155 m 6D (109)	175 } 7D (125)
1 1 1 0	16 SO E (14)	36 RS 1E (30)	56 . 2E (46)	76 > 3E (62)	116 N 4E (78)	136 ^ 5E (94)	156 n 6E (110)	176 ~ 7E (126)
1 1 1 1	17 SI F (15)	37 US 1F (31)	57 / 2F (47)	77 ? UNL 3F (63)	117 O 4F (79)	137 UNT _ 5F (95)	157 o 6F (111)	177 RUBOUT (DEL) 7F (127)

ADDRESSED COMMANDS

UNIVERSAL COMMANDS

LISTEN ADDRESSES

TALK ADDRESSES

SECONDARY ADDRESSES OR COMMANDS

KEY TO CHART

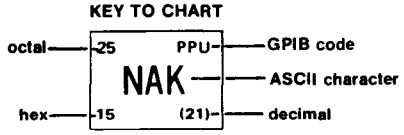

3391-13

Fig. 3-2. ASCII and IEEE 488 (GPIB) code chart.

Scan by Zenith

- Floating point numbers expressed in scientific notation. Examples: +1.0E−2, 1.47E1, 1.E−2, 0.01E+0.

Rounding of Numeric Arguments

The instrument rounds numeric arguments to the nearest unit of resolution and then checks for out-of-range conditions.

Message Protocol

As the instrument receives a message it is stored in the input buffer, processed, and executed. Processing a message consists of decoding commands, detecting delimiters and checking syntax. For setting commands, the instrument stores the indicated changes in the pending settings buffer. If an error is detected during processing, the instrument asserts SRQ, ignores the remainder of the message, and resets the pending settings buffer. Resetting the pending settings buffer avoids undesirable states which could occur if some setting commands are executed while others in the same message are not.

Executing a message consists of performing the actions specified by its command(s). For setting commands, this involves updating the instrument settings and recording these updates in the current settings buffer. The setting commands are executed in groups—that is, a series of setting commands is processed and recorded in the pending settings buffer before execution takes place. This allows the user to specify a new instrument state without considering if a particular sequence is valid. Execution of the settings occurs when the instrument processes the message terminator, a query-output command, or an operational command.

When the instrument processes a query-output command any preceding setting commands are executed to update the state of the instrument. The query-output command is then executed by retrieving the appropriate data and putting it in the output buffer. Then, processing and execution continue for the remainder of the message. When the instrument is made a talker the data is sent to the controller.

When the instrument processes an operational command, it executes any preceding setting commands before executing the operational command.

Multiple Messages

A single message may be long enough to fill the input buffer. If so, a portion of the message is processed before the instrument accepts additional input. During command processing the instrument holds off additional data (by asserting NRFD) until space is available in the buffer.

When buffer space is available, the instrument accepts a second message before processing the first. However, additional messages are held off with NRFD until the first message is processed completely.

After the instrument executes a query-output command the response holds the output buffer until the instrument becomes a talker. If a new message is received before all of the output from the previous message is read the output buffer is cleared before executing the new message. This prevents the controller from getting unwanted data from old messages.

One other situation may cause the instrument to delete output. The execution of a long message might fill both the input and output buffers. When this occurs, the instrument cannot finish executing the message becasue it is waiting for the controller to read the data it has generated. But the controller cannot read the data because it is waiting to finish sending its message. Because the instruments input buffer is full and the remainder of the controllers message is held off by NRFD, the system is hung up. The controller and instrument are waiting for each other. When the instrument detects this condition, it generates an error, asserts SRQ and deletes the data in the output buffer. This allows the controller to transmit the rest of the message and informs the controller that the message was executed and the output was deleted.

Instrument Response to IEEE-488 Interface Messages

Interface messages and their effects on the instruments interface functions are defined in IEEE Standard 488-1978. Abbreviations from the standard are used in this discussion, which describe the effects of interface messages on instrument operation.

Bus interface control messages are sent as low level commands through the use of WBYTE controller commands. For the following commands A = 32 plus the instrument address and B = 64 plus the instrument address.

Listen	WYBTE @ A:
Unlisten	WYBTE @ 63:
Talk	WYBTE @ B:
Untalk	WYBTE @ 95:
Untalk-unlisten	WYBTE @ 63, 95:
Device clear (DCL)	WYBTE @ 20:
Selective device clear (SDC)	WYBTE @ A, 4:
Go to local (GTL)	WYBTE @ A, 1:
Remote with lockout	WYBTE @ A, 17, 63:
Local lockout of all instruments	WYBTE @ 17:
Group execute trigger (GET)	WYBTE @ A, 8:

Scan by Zenith

These commands are for the TEKTRONIX 4041 and 4050-Series controllers and representative for other controllers.

UNL—Unlisten
UNT—Untalk

When the AA 5001 receives the UNL command the listener function goes to the idle state (unaddressed). In the idle state, the AA 5001 does not accept instrument commands from the GPIB.

The talker function goes to the idle state when the AA 5001 receives the UNT command. In this state, the AA 5001 cannot output data via the GPIB.

The ADRS light is off when both the talker and listener functions are idle. The light is on if the instrument is either talk or listen addressed.

IFC—Interface Clear

This uniline message has the same affect as both the UNT and UNL messages. The front panel ADRS light is off.

DCL—Device Clear

The Device Clear message reinitializes communication between the instrument and controller. In response to DCL, the instrument clears any input and output messages and any unexpected settings in the pending settings buffer. Also cleared are any errors or events waiting to be reported, except the power-on events. When DCL is received by the AA 5001 an SRQ is unasserted if the SRQ line was asserted for any reason other than power-on.

SDC—Selected Device Clear

This message performs the same function as DCL; however, only instruments that are listen addressed respond.

GET—Group Execute Trigger

The AA 5001 recognizes the GET message. Upon receipt the AA 5001 issues an error.

SPE—Serial Poll Enable
SPD—Serial Poll Disable

The SPE message enables the AA 5001 to output serial poll status bytes when it is talk addressed. The SPD message switches the AA 5001 to sending data from the output buffer.

MLA—My Listen Address
MTA—My Talk Address

The primary listen and talk addresses are established by the AA 5001 GPIB address (internally set). When the AA 5001 is addressed to talk or listen, the front panel ADRS indicator illuminates.

LLO—Local Lockout

In response to LLO, the AA 5001 goes to a lockout state—from LOCS to LWLS or from REMS to RWLS.

REN—Remote Enable

If REN is true, the instrument goes to a remote state (from LOCS to REMS or from LWLS to RWLS) when its listen address is received. When REN is false a transition from any state to LOCS. The AA 5001 stays in LOCS as long as REN is false.

A REN transition may occur after message processing has begun. In this case execution of the message being processed is not affected.

GTL—Go To Local

Only instruments that are listen addressed respond to GTL. Remote-to-local transitions caused by GTL do not affect the execution of the message being processed when GTL is received.

Talked With Nothing to Say Response

The AA 5001 can be made a talker without having received a message that specifies the output. If the AA 5001 is talk addressed (receives MTA) without being specifically told what to say, it returns a measurement as if the SEND command was received. Refer to the SEND command in this section.

Remote-Local Operation

The preceding discussion described the state transitions caused by GTL and REN. The LEVEL, THD+N, IMD RESPONSE or FILTERS pushbuttons cause a transition from REMS to LOCS by asserting a message called return-to-local (rtl). This transition may occur during message execution. In contrast to GTL and REN transitions, a transition initiated by rtl does affect message execution. The instrument generates an error if there are any unexecuted setting or operational commands.

The instrument maintains a record of its settings in the current settings buffer. New settings from the front panel or

Scan by Zenith

the controller update these settings. In addition, the front panel is updated to reflect setting changes due to commands. The REMOTE indicator is illuminated when the instrument is in REMS or RWLS.

Local State (LOCS)

In LOCS, instrument settings are controlled by the operator via front panel pushbuttons. When in LOCS, only bus commands that do not change instrument settings are executed (query-output commands). All other bus commands (setting and operational) generate an error as their functions are under front panel control.

Local With Lockout State (LWLS)

The instrument operates the same as in LOCS, except rtl does not inhibit a transition to remote.

Remote State (REMS)

In this state, the instrument executes all instrument commands. For commands having front panel indicators, the front panel is updated when the commands are executed.

Both the input range and distortion range are forced to auto-range except when the "FPset" command is used (see FPset).

Remote With Lockout State (RWLS)

Instrument operation is identical to REMS operation except the rtl message is ignored.

STATUS AND ERROR REPORTING

Through the Service Request function (defined in the IEEE-488 Standard), the instrument alerts the controller that it needs service. This service request is also a means of indicating that an event (a change in status or an error) has occurred. To service a request the controller performs a Serial Poll. In response the instrument returns a Status Byte (STB) which indicates if it requested service. The STB also provides a limited amount of information about the request. The format of information encoded in the STB is given in Fig. 3-3. When data bit 8 is set, the STB conveys Device Status information indicated by bits 1 through 4.

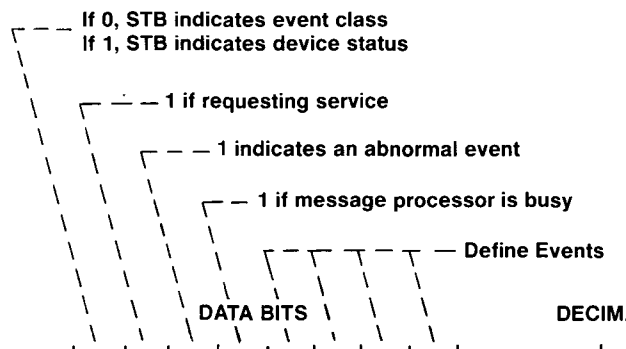

STATUS BYTE (Example)	8	7	6	5	4	3	2	1	Bit 5	Bit 5
DECIMAL WEIGHT	128	64	32	16	8	4	2	1	not asserted	asserted
Normal Conditions:										
Power-up	0	1	0	x	0	0	0	1	65	81
Operation complete	0	1	0	x	0	0	1	0	66	82
Display overrange	0	1	0	x	0	1	0	0	68	84
No events	1	0	0	x	0	0	0	0	128	144
Device Dependent Events:										
Insufficient input level	1	1	0	x	0	0	0	1	193	209
Excessive input level	1	1	0	x	0	0	1	1	195	211
Unsettled	1	1	0	x	0	1	0	0	196	212
Abnormal Conditions:										
Command errors	0	1	1	x	0	0	0	1	97	113
Execution errors	0	1	1	x	0	0	1	0	98	114
Internal errors	0	1	1	x	0	0	1	1	99	115

4598-07

Fig. 3-3. Definition of status bytes.

Scan by Zenith

As the STB conveys limited information about an event, the events are divided into classes; the Status Byte reports the class of events. The classes of events are listed as follows:

COMMAND ERROR	Indicates the instrument received a command which it cannot understand.
EXECUTION ERROR	Indicates that the instrument received a command that it cannot execute. This is caused by arguments out of range or settings that conflict.
INTERNAL ERROR	Indicates that the instrument has detected a hardware condition or firmware problem that prevents operation.
SYSTEM EVENTS	Events that are common to instruments in a system (e.g., Power on, User Request, etc.).
INTERNAL WARNINGS	The instrument has detected a problem. The instrument remains operational but the problem should be corrected.
DEVICE STATUS	Device dependent events.

The instrument can provide additional information about many of the events, particularly the errors reported in the Event Query. After determining that the instrument requested service (by examining the STB) the controller may request additional information by sending an event query (EVENT). In response, the instrument returns a code which defines the event. These codes are described in Table 3-1.

Scan by Zenith

Table 3-1
ERROR QUERY AND STATUS INFORMATION

Event	Bus response to ERR?	Response to serial poll[a]
Abnormal Conditions		
Command Errors		
Command header error	101	97 or 113
Header delimiter error	102	97 or 113
Command argument error	103	97 or 113
Argument delimiter error	104	97 or 113
Missing argument	106	97 or 113
Invalid message unit delimiter	107	97 or 113
Execution Errors		
Command not executable in local mode	201	98 or 114
Returned to local, new pending settings lost	202	98 or 114
I/O buffers full, output dumped	203	98 or 114
Argument out of range	205	98 or 114
Group execute trigger ignored	206	98 or 114
Internal Errors		
Interrupt fault	301	99 or 115
System error	302	99 or 115
Math pack error	303	99 or 115
Normal Conditions		
System Events		
Power on	401	65 or 81
Operation complete	402	66 or 82
Execution Warning		
Display overrange	601	68 or 84
Device Dependent Events		
Insufficient input level	701	193 or 209
Excessive input level	703	195 or 211
Unsettled	704	196 or 212
No Errors or Events	0	0 or 16
With data not ready	128 or 144	
With data ready	132 or 148	

[a]If the message processor is busy, the instrument returns the higher decimal number.

To report more than one event, the instrument continues to assert SRQ until all events are reported. Each event is cleared when reported via Serial Poll. The Device Clear (DCL) interface message clears all events except Power On.

Some commands control reporting of certain individual events and disable all service requests. For example, the Request for Service command (RQS) controls the reporting of events with SRQ. The Operation Complete Service Request (OPC) asserts SRQ where a valid reading is available. The Overrange Service Request (OVER) command asserts SRQ for overrange, increasing range or decreasing range conditions.

RQS OFF inhibits all SRQs. In this mode the EVENT? query allows the controller to find out about events without performing a Serial Poll. With RQS OFF, the controller may send the EVENT? query at any time and the instrument re-

Scan by Zenith

turns an event waiting to be reported. The controller can clear all events by sending the EVENT? query until a zero (0) code is returned, or clear all events except power-on through the DCL interface message.

With RQS OFF the controller may perform a Serial Poll, but the Status Byte only contains Device Dependent Status information. With RQS ON, the STB contains the class of the event and a subsequent EVENT? query returns additional information about the previous event reported in the STB.

Power Up (Initial) Conditions

During power up, the AA 5001 microprocessor performs a diagnostic routine (self test) to check the functionality of the ROM and RAM. If no error is found, the instrument enters the Local State (LOCS) with the default settings as listed in Table 3-2. The SRQ line on the GPIB is asserted. If an internal error is found, an error code is displayed in the front-panel readout. See Table 6-3 in the Maintenance Section for front panel error displays.

Table 3-2
POWER UP SETTINGS

The instrument goes to the front panel settings and the following at power-up:

Header	Argument
COUNTS	2.0
DUS	ON
FILT	FLAT
FUNC	VOLTS
OPC	OFF
POINTS	3
RESP	RMS
RQS	ON
TOL	2.0
OVER	OFF

The POLL Statement and Clearing SRQ

The POLL statement causes the BASIC interpreter in the 4050 series controllers to serially poll each peripheral device on the General Purpose Interface Bus (GPIB) to determine the device requesting service. When the device is found, the device sends its status byte to the BASIC interpreter over the GPIB.

The POLL statement is normally executed in response to a service request from a peripheral device on the GPIB. Two numeric variables are specified as parameters in the POLL statement followed by a series of I/O addresses. The BASIC interpreter polls the first I/O address in the list, the second I/O address, the third, and so on, until the device requesting service is found. Program execution is halted, if the I/O address of the device requesting service is not in the list.

The AA 5001 asserts SRQ during power up or power down. The power up SRQ must be cleared before continuing.

POLL A,B;22

This statement shows a method of clearing the service request. Two numeric variables A and B are specified. Following the variables is the semicolon delimiter and the instrument address or the alpha character defined as the instruments primary address. After the device requesting service is found the devices position in the list is assigned to the first variable. The status word from this device is assigned to the second variable.

Information Available

Additional assistance in developing specific application oriented software is available in the following Tektronix manuals.

(1) 070-3985-00—GPIB Programming Guide. This manual is specifically written for applications of this instrument in IEEE-488 systems. It contains programming instructions, tips and some specific example programs.

(2) 070-3917-00—4041 System Controller Programmer's Reference manual.

(3) 070-2270-00—4051 GPIB Hardware Support Manual. This manual gives an indepth discussion of IEEE-488 bus operation, explanations of bus timing details and early bus interface circuitry.

(4) 070-2058-01—Programming In BASIC.

(5) 070-2059-01—Graphic Programming In BASIC.

(6) 070-2380-01—4907 File Manager Operators manual.

(7) 070-2128-00—4924 Users manual.

(8) 070-1940-01—4050 Series Graphic System Operators manual.

(9) 070-2056-01—4050 Series Graphic System Reference manual.

(10) 070-3918-00—4041 Operators manual.

(11) 061-2546-00—4041 Programming Reference manual.

Scan by Zenith

PROGRAMMING EXAMPLES

```
100   ! ********************************************************
110   ! ******  TALKER/LISTENER PROGRAM FOR 4052A / AA 5001  ******
120   ! ********************************************************
130   !
140   ! Oct 4, 1983
150   !
160   ! PURPOSE:
170   ! Supports operator interaction with the AA 5001 over the GPIB.
180   ! The operator may enter AA 5001 commands and observe the
190   ! results.  Service requests, such as for an incorrect command,
200   ! are handled.
210   !
220   ! REQUIRED EQUIPMENT:
230   ! 4052A Controller
240   ! AA 5001 Programmable Distortion Analyzer.
250   !
260   ! VARIABLES USED:
270   !
280   ! Aa_pri_addr -- AA 5001 primary address.  Assigned value of 28.
290   ! Change if instrument set to other address.
300   !
310   ! Spoll_stat -- Status returned by serial poll from first
320   ! instrument requesting service.
330   !
340   ! Addr_list_indx -- Address list index returned by serial poll.
350   !
360   ! Addr_list -- Array of addresses found by CONFIG routine.
370   !
380   ! Config_code -- Flag returned by config routine.
390   !
400   ! Aa_command$ -- Commands entered by the operator and directed
410   ! to the AA 5001.
420   !
430   ! Aa_response$ -- Response from the AA 5001 to Ss_command$
440   ! (null if no output command contained in Aa_command$).
450   !
460   ! ROUTINE CALLED:
470   ! Serial poll subroutine handles instrument service requests
480   ! from all instruments on the bus.
490   !
500   ! POSSIBLE ERRORS:
510   ! AA 5001 primary address is set different than the number
520   ! assigned to Aa_pri_addr.
530   !
540 INIT
550 DIM Aa_response$(300),Aa_command$(100),Addr_list(15)
560 Aa_pri_addr=28
570   !
580 CALL "config",Config_code,Addr_list
590 IF Config_code THEN
600    PRINT "Configuration routine failed due to problem on GPIB."
610    STOP
620 END IF
630   !
640 ON SRQ THEN 790
650   !
660 PRINT "AA 5001 TALKER/LISTENER PROGRAM"
670   !
680 PRINT "Enter command message:  ";
690 INPUT Aa_command$
700 PRINT @Aa_pri_addr:Aa_command$
710 INPUT @Aa_pri_addr:Aa_response$
720 PRINT Aa_response$
```

Fig. 3-4. AA 5001 Talker Listener program (4052A).

Scan by Zenith


```
730 GO TO 680
740 END
750   !
760   ! Serial poll routine
770 LOCAL Aa_report$
780 DIM Aa_report$(80)
790 POLL Addr_list_indx,Spoll_stat;Addr_list
800 IF Addr_list(Addr_list_indx)=Aa_pri_addr THEN
810    PRINT @Aa_pri_addr:"id?;errmss?"
820    INPUT @Aa_pri_addr:Aa_report$
830    PRINT "ADDRESS=";Addr_list(Addr_list_indx),"STATUS=";Spoll_stat
840    PRINT Aa_report$
850 END IF
860 RETURN   ! From service request subroutine
```

Fig. 3-4 (cont). AA 5001 Talker Listener program (4052A).

```
100   ! ************************************************************
110   ! ********  TALKER/LISTENER PROGRAM FOR 4041 / AA 5001  *********
120   ! ************************************************************
130   !
140   ! October 4, 1983
150   !
160   ! PURPOSE:
170   ! Supports operator interaction with the AA 5001 over the GPIB.
180   ! The operator may enter AA 5001 commands and observe the results.
190   ! Service requests, such as for an incorrect command, are handled.
200   !
210   ! REQUIRED EQUIPMENT:
220   ! 4041 Controller (V2.0)
230   ! AA 5001 Programmable Distortion Analyzer.
240   !
250   ! VARIABLES USED:
260   !
270   ! Aa_pa --  AA 5001 primary address.  Assigned value of 28.  Change if
280   ! instrument set to other address.
290   !
300   ! Aa_port -- Port where AA 5001 connected.  Assigned value of 0.
310   ! Change if instrument is connected to GPIB1 instead of GPIB0.
320   !
330   ! Aastrem$ -- Stream specification for AA 5001.
340   !
350   ! Spollsta -- Status returned by first instrument found requesting service.
360   !
370   ! Spolladd -- Address of first instrument found requesting service.
380   !
390   ! Command$ -- Commands entered by the operator and directed to the AA 5001.
400   !
410   ! Respons$ -- Response of the AA 5001 to command$ (null if no output
420   ! command contained in command$).
430   !
440   ! LOGICAL UNIT USED:
450   ! 100:  Assised to AA 5001 stream spec.
460   !
470   ! ROUTINE CALLED:
480   ! Pollbus  Handles request for service from any instrument on the
490   ! bus selected by the AA 5001 stream spec.
500   !
```

Fig. 3-5. AA 5001 Talker Listener program (4041).

Scan by Zenith


```
510   ! POSSIBLE ERRORS:
520   ! aa_pa or aa_port variables do not match the AA 5001 primary address or
530   ! port where AA 5001 is connected, respectively.
540   !
550     Dim respons$ to 300,command$ to 100,aastrem$ to 20
560     Integer aa_pa,spollsta,spolladd,aa_port
570     Aa_pa=28
580     Aa_port=0
590   !
600     Aastrem$="gpib"&str$(aa_port)&"(pri="&str$(aa_pa)&"):"
610     Open #100:aastrem$
620     Select aastrem$
630     On srq then call pollbus
640     Enable srq
650   !
660 Tlk_lisn:     input prompt "Enter command message:  ":command$
670     Input #100 prompt command$:respons$
680     Print respons$ ! AA 5001 returns blank line if not queried in command$
690     Goto tlk_lisn
700     End ! Main
800 Sub pollbus local report$
810   ! PURPOSE:
820   ! Handles gpib service requests.  Polls all primary addresses until
830   ! source of srq is found.  If srq from instrument at AA 5001 primary
840   ! address, routine queries id and error message.
850   !
860   ! LOCAL VARIABLE:
870   ! Report$:  Id and event report from instrument at aa_pa if it has srq.
880   !
890     Dim report$ to 80
900     Poll spollsta,spolladd
910     If spolladd=aa_pa then input #100 prompt "id?;errmsg?":report$
920     Print report$,"STATUS=";spollsta,"ADDRESS=";spolladd,"PORT=";val(aastrem$)
930     Resume
940     End ! Sub pollbus
```

Fig. 3-5 (cont). AA 5001 Talker Listener program (4041).

```
100   ! ************************************************************
110   ! ******** TOTAL HARMONIC DISTORTION VERSUS FREQUENCY ********
120   ! ************************************************************
130   !
140   ! For 4050A Series:July 22, 1983     Revised: September 28, 1983
150   !
160   ! Copyright (c) 1983 Tektronix, Inc.  All rights reserved.  This
170   ! software is provided on an "as is" basis without warranty of
180   ! any kind.  It is not supported.
190   !
200   ! This program may be reproduced without prior permission, in
210   ! whole or in part, by the orisinal purchaser.  Copies must
220   ! include the above copyright and warranty notice.
230   !
240   ! PURPOSE:
250   ! Records the total harmonic distortion of a system to a leveled
260   ! input sisnal which is swept from 10 Hz-100 KHz in logarithmic
270   ! fashion. The total number of points is 21. The results are then
280   ! plotted on the 4050A Series screen.
290   !
```

Fig. 3-6. AA 5001 program example (4050A series).

Scan by Zenith


```
300   ! REQUIRED EQUIPMENT:
310   ! AA 5001 Programmable Distortion Analyzer.
320   ! SG 5010 Programmable 160 KHz Oscillator.
330   ! 4050A Series Controller
340   !
350   ! PROGRAM SEGMENT VARIABLES:
360   ! aaprim        AA 5001 primary address. Factory set to 28.
370   ! ssprim        SG 5010 primary address. Factory set to 25.
380   ! nsteps        number of frequency steps.
390   ! freqaray      array of calculated frequencies.
400   ! thdaray       array of measured total harmonic distortion.
410   ! freqstrt      sweep starting frequency.
420   ! freqstop      sweep stop frequency.
430   ! _toleran      tolerance for Delay Until Settled algorithm.
440   ! counts        number of counts for DUS algorithm in AA 5001.
450   ! _points       number of readings to be within tolerance and
460   !               counts.
470   ! amplit        output amplitude of SG 5010.
480   !
490   ! OPERATING INSTRUCTIONS:
500   ! Connect output of SG 5010 to input of Device Under Test.
510   ! Connect output of DUT to input of AA 5001. Address of AA 5001
520   ! must be set to 28 and address of SG 5010 must be set to 25. If
530   ! addresses are different from these factory set addresses, then
540   ! variables aaprim ( AA 5001 primary address ) and ssprim ( SG 501
550   ! primary address ) must be changed accordingly.
560   !
570   ! ERRORS:
580   ! AA 5001 and SG 5010 addresses must be set to 28 and 25
590   ! respectively or program assignments of variables aaprim
600   ! and ssprim changed in program.
610   !
620   ! INSTRUMENT CONTROL:
630   ! Polls instruments on assigned addresses (AA 5001 and SG 5010).
640   !
650   ! ******************************************************
660   ! Begin main program segment
670 INIT
680 PAGE
690 Aaprim=28
700 Ssprim=25
710 Nsteps=21
720 DIM Freqaray(Nsteps),Thdaray(Nsteps)
730 Freqstrt=10
740 Freqstop=100000
750 _toleran=0.1
760 Counts=1
770 _points=6
780 Amplit=1
790 Title$="THD VERSUS FREQUENCY"
800 Xtitle$="Frequency in Hertz"
810 Ytitle$="THD in Percent"
820 ON SRQ THEN 1950
830   !
840   ! Get frequency values for sweep.
850 CALL Sweeplog(Freqstrt,Freqstop,Nsteps,Freqaray)
860   !
870   ! Initialize Instruments
880 WBYTE @Aaprim+32,Ssprim+32:73,78,73,-84
890 WBYTE @95,63:
900   ! Lock out the AA 5001 and the SG 5010 front panels.
910 WBYTE @17:
920   ! Set up AA 5001 for THD Function in percent, filters off, RMS.
```

Fig. 3-6 (cont). AA 5001 program example (4050A series).

Scan by Zenith


```
930 PRINT @Aaprim:"FUNC THDP;FILT OFF;RESP RMS"
940   ! Set up AA 5001 to delay sending a reading until settled.
950   ! Set tolerance, number of counts, and number of points.
960 PRINT @Aaprim:"DUS ON;TOL ";_toleran;";COUNTS ";Counts
970 PRINT @Aaprim:"POINTS ";_points
980   ! Set up SG 5010 for an RMS balanced output, out on, display freq.
990 PRINT @Sgprim:"VRMS ";Amplit;";BAL ON;OUT ON;DISP FREQ"
1000 FOR Count=1 TO Nsteps
1010    PRINT @Sgprim:"FREQ ";Freqaray(Count)
1020    PRINT @Aaprim:"SEND"
1030    INPUT @Aaprim:Thdaray(Count)
1040 NEXT Count
1050 CALL Plotloop(Nsteps,Freqaray,Thdaray,Title$,Xtitle$,Ytitle$)
1060   ! Unlock all instruments on the bus.
1070 CALL "RENOFF"
1080 CALL "RENON"
1090 OFF SRQ
1100 END
1110 SUB Sweeplog(Freqstrt,Freqstop,Nsteps,Freqaray)
1120    _steps=Nsteps-1
1130    _stepsize=(LGT(Freqstop)-LGT(Freqstrt))/_steps
1140    Index=0
1150    FOR Count=LGT(Freqstrt) TO LGT(Freqstop) STEP _stepsize
1160       Index=Index+1
1170       Freqaray(Index)=10^Count
1180    NEXT Count
1190 END SUB
1200 SUB Plotloop(Nsteps,Freqaray,Thdaray,Title$,Xtitle$,Ytitle$)
1210    PAGE
1220    WINDOW 0,130,0,100
1230    VIEWPORT 0,130,0,100
1240    PRINT "I       ";Title$
1250    PRINT "J"
1260    FOR I=1 TO LEN(Ytitle$)
1270       S$=SEG(Ytitle$,I,1)
1280       PRINT USING 1290:S$
1290       IMAGE A/
1300    NEXT I
1310    MOVE 0,4
1320    PRINT "I             ";Xtitle$
1330    VIEWPORT 20,120,20,85
1340    Low=Thdaray(1)
1350    FOR Index=1 TO Nsteps
1360       IF Thdaray(Index)<Low THEN
1370          Low=Thdaray(Index)
1380       END IF
1390    NEXT Index
1400    High=Thdaray(1)
1410    FOR Index=1 TO Nsteps
1420       IF Thdaray(Index)>High THEN
1430          High=Thdaray(Index)
1440       END IF
1450    NEXT Index
1460    High=INT(10*High+1)/10
1470    Low=INT(10*Low-1)/10
1480    IF Low<=0 THEN
1490       Low=0
1500    END IF
1510    Dif=High-Low
1520    WINDOW 10,50,Low,High
1530    MOVE 10,High
1540    DRAW 10,Low
```

Fig. 3-6 (cont). AA 5001 program example (4050A series).

Scan by Zenith


```
1550    DRAW 50,Loy
1560    DRAW 50,Hiy
1570    DRAW 10,Hiy
1580    FOR P=1 TO 4
1590       FOR Q=2 TO 10
1600          T=10*LGT(Q*10^P)
1610          MOVE T,Loy
1620          FOR Tic=Loy TO Hiy STEP 0.1*Dif
1630             RMOVE 0,-0.01*Dif
1640             RDRAW 0,0.02*Dif
1650             MOVE T,Tic
1660          NEXT Tic
1670       NEXT Q
1680       MOVE P*10-0.75,Loy-0.1*Dif
1690       PRINT "10"
1700       RMOVE 0.7,0.05*Dif
1710       PRINT P
1720       MOVE T,Loy
1730       DRAW T,Hiy
1740    NEXT P
1750    MOVE P*10-0.75,Loy-0.1*Dif
1760    PRINT "10"
1770    RMOVE 0.7,0.05*Dif
1780    PRINT P
1790    FOR Hor=Loy TO Hiy STEP 0.1*Dif
1800       MOVE 4,Hor-0.01*Dif
1810       IF Hor=0 THEN 1840
1820       PRINT USING "2D.3D2A":Hor;"%"
1830       GO TO 1850
1840       PRINT USING "2A2D":"  ";Hor
1850       MOVE 10,Hor
1860       DRAW 50,Hor
1870    NEXT Hor
1880    MOVE 10*LGT(Freqaray(1)),Thdaray(1)
1890    FOR Count=2 TO Nsteps
1900       DRAW 10*LGT(Freqaray(Count)),Thdaray(Count)
1910    NEXT Count
1920    HOME
1930 END SUB
1940   ! SRQ Handler
1950 DIM E$(60)
1960 Eflag=0
1970 POLL Addr,Stabyt;Aaprim;Sgprim
1980 GOSUB Addr OF 2000,2040
1990 GO TO 2360
2000 PRINT @Aaprim:"ID?;ERR?"
2010 INPUT @Aaprim:E$
2020 Addr=Aaprim
2030 GO TO 2070
2040 PRINT @Sgprim:"ID?;ERR?"
2050 INPUT @Sgprim:E$
2060 Addr=Sgprim
2070 L=POS(E$,"ERR",1)
2080 Error$=SEG(E$,L,10)
2090 Error=VAL(Error$)
2100 S$=SEG(E$,8,6)
2110 IF S$="AA5001" AND Error=601 THEN
2120    Eflag=1
2130 END IF
2140 IF S$="AA5001" AND Error=701 THEN
2150    Eflag=2
2160 END IF
2170 IF S$="AA5001" AND Error=703 THEN
2180    Eflag=3
```

Fig. 3-6 (cont). AA 5001 program example (4050A series).

Scan by Zenith


```
2190 END IF
2200 IF S$="AA5001" AND Error=704 THEN
2210    Eflag=4
2220 END IF
2230 IF Eflag=1 THEN
2240    E$=E$&"Display Overrange"
2250 END IF
2260 IF Eflag=2 THEN
2270    E$=E$&"Insufficient Input Level"
2280 END IF
2290 IF Eflag=3 THEN
2300    E$=E$&"Excessive Input Level"
2310 END IF
2320 IF Eflag=4 THEN
2330    E$=E$&"Unsettled Reading"
2340 END IF
2350 PRINT E$,"ADDRESS = ";Addr,"STATUS = ";Stabyt
2360 RETURN
2370 END
```

Fig. 3-6 (cont). AA 5001 program example (4050A Series).

```
100   ! ******************************************************************
110   ! ************ TOTAL HARMONIC DISTORTION VERSUS FREQUENCY *************
120   ! ******************************************************************
130   !
140   ! For 4041: July 22, 1983     Revised: September 28, 1983
150   !
160   ! Copyright (c) 1983 Tektronix, Inc.  All rights reserved.  This
170   ! software is provided on an "as is" basis without warranty of
180   ! any kind.  It is not supported.
190   !
200   ! This program may be reproduced without prior permission, in whole
210   ! or in part, by the original purchaser.  Copies must include the
220   ! above copyright and warranty notice.
230   !
240   ! PURPOSE:
250   ! Records the total harmonic distortion of a system to a leveled
260   ! input signal which is swept from 10 Hz to 100 KHz in logarithmic
270   ! fashion. The total number of points is 21. The results are then
280   ! printed out on the 4041 printer.
290   !
300   ! REQUIRED EQUIPMENT:
310   ! AA 5001 Programmable Distortion Analyzer.
320   ! SG 5010 Programmable 160 KHz Oscillator.
330   ! 4041 Controller (V2.0)
340   !
350   ! PROGRAM SEGMENT VARIABLES:
360   ! aaprim        AA 5001 primary address. Factory set to 28.
370   ! ssprim        SG 5010 primary address. Factory set to 25.
380   ! aa            AA 5001 logical unit number.
390   ! ss            SG 5010 logical unit number.
400   ! nsteps        number of frequency steps.
410   ! freqarray     array of calculated frequencies.
420   ! thdarray      array of measured total harmonic distortion.
430   ! freqstrt     sweep starting frequency.
```

Fig. 3-7. AA 5001 program example (4041).

Scan by Zenith


```
440   ! freqstop       sweep stop frequency.
450   ! toleran        tolerance for Delay Until Settled algorithm in AA 5001.
460   ! counts         number of counts for DUS algorithm in AA 5001.
470   ! points         number of readings to be within tolerance and points.
480   ! amplit         output amplitude of SG 5010.
490   !
500   ! OPERATING INSTRUCTIONS:
510   ! Connect output of SG 5010 to input of Device Under Test.
520   ! Connect output of DUT to input of AA 5001. Address of AA 5001
530   ! must be set to 28 and address of SG 5010 must be set to 25. If
540   ! addresses are different from these factory set addresses, then
550   ! variables aaprim ( AA 5001 primary address ) and sgprim ( SG 5010
560   ! primary address ) must be changed accordingly.
570   !
580   ! ERRORS:
590   ! No GPIB or tape error handlers are linked so 4041 prints default system
600   ! error messages and stops if such errors occur (instrument power is off
610   ! or tape capacity exceeded, etc.).
620   !
630   ! INSTRUMENT CONTROL:
640   ! Polls all instruments on selected port.
650   !
660   ! ******************************************************************
670   ! Begin main program segment
680     Init all
690     Select "gpib0:"
700     On srq then call handler
710     Integer aaprim,sgprim,aa,sg,nsteps,points
720     Set fuzz 7,1.0E-14,14,1.0E-64
730     Aaprim=28
740     Sgprim=25
750     Aa=280
760     Sg=250
770     Nsteps=21
780     Dim freqaray(nsteps),thdaray(nsteps)
790     Freqstrt=10
800     Freqstop=1.0E+5
810     Toleran=0.1
820     Counts=1
830     Points=6
840     Amplit=1
850     Title$="THD VERSUS FREQUENCY"
860     Xtitle$="Frequency in Hertz"
870     Ytitle$="THD in Percent"
880     Open #aa:"gpib0(pri="&str$(aaprim)&"):"
890     Open #sg:"gpib0(pri="&str$(sgprim)&"):"
900     Open #2000:"prin:"
910     Enable srq
920   !
930   ! Get frequency values for sweep.
940     Call logsweep(freqstrt,freqstop,nsteps,freqaray)
950   !
960   ! Initialize Instruments
970     Wbyte atn(mta,aaprim+32,sgprim+32),"INIT",eoi,atn(unt,unl)
980   ! Lock out the AA 5001 and the SG 5010 front panels.
990     Wbyte llo
1000  ! Set up AA 5001 for THD Function in percent, filters off, RMS Response.
1010    Print #aa:"FUNC THDP;FILT OFF;RESP RMS"
1020  ! Set up AA 5001 to delay sending a reading until settled.
1030  ! Set tolerance, number of counts, and number of points for DUS algorithm.
1040    Print #aa:"DUS ON;TOL";toleran,"COUNTS";counts,"POINTS";points
1050  ! Set up SG 5010 for an RMS balanced output, out on, display freq.
```

Fig. 3-7 (cont). AA 5001 program example (4041).

Scan by Zenith


```
1060      Print #ss:"VRMS";amplit,"BAL ON;OUT ON;DISP FREQ"
1070      For count=1 to nsteps
1080        Print #ss:"FREQ";freqaray(count)
1090        Input prompt "SEND" #aa:thdaray(count)
1100        Next count
1110 Out_data:     call printout(nsteps,freqaray,thdaray)
1120   !Unlock all instruments on the bus.
1130      Wbyte ren(0),ren(1)
1140      End
1200 Sub logsweep(freqstrt,freqstop,nsteps var freqaray) local steps,stepsize,index,count
1210      Integer index,steps
1220      Steps=nsteps-1
1230      Stepsize=(lgt(freqstop)-lgt(freqstrt))/steps
1240      Index=0
1250      For count=lgt(freqstrt) to lgt(freqstop) step stepsize
1260        Index=index+1
1270        Freqaray(index)=10^count
1280        Next count
1290      Return
1300      End
1400 Sub printout(nsteps,freqaray,thdaray)
1410      Print using "FA4XFA" #2000:"FREQUENCY","THD"
1420      Print using "20A" #2000:"--------------------"
1430      For count=1 to nsteps
1440        Print using "7J2A3X6.4GA" #2000:freqaray(count),"Hz",thdaray(count),"%"
1450        Next count
1460      Return
1470      End
1500 Sub handler local e$,statbyt,addr,eflag
1510      Dim e$ to 60
1520      Eflag=0
1530      Poll stabyt,addr
1540      Input prompt "ID?;ERR?" #addr:e$
1550      If seg$(e$,8,6)="AA5001" and valc(e$,pos(e$,"ERR",1))=601 then eflag=1
1560      If seg$(e$,8,6)="AA5001" and valc(e$,pos(e$,"ERR",1))=701 then eflag=2
1570      If seg$(e$,8,6)="AA5001" and valc(e$,pos(e$,"ERR",1))=703 then eflag=3
1580      If seg$(e$,8,6)="AA5001" and valc(e$,pos(e$,"ERR",1))=704 then eflag=4
1590      If eflag=1 then e$=e$&"Display Overrange"
1600      If eflag=1 then e$=e$&"Insufficient Input Level"
1610      If eflag=1 then e$=e$&"Excessive Input Level"
1620      If eflag=1 then e$=e$&"Unsettled Reading"
1630      Print using "FAL=FA2DL=FA3DL" #2000:e$,"ADDRESS = ",addr,"STATUS = ",stabyt
1640      Resume
1650      End
```

Fig. 3-7 (cont). AA 5001 program example (4041).

Scan by Zenith


```
100   ! ************************************************************
110   ! *************** DEVICE GAIN VERSUS FREQUENCY ***************
120   ! ************************************************************
130   !
140   ! For 4050A Series:  July 22, 1983     Revised: September 28, 1983
150   !
160   ! Copyright (c) 1983 Tektronix, Inc.  All rights reserved.  This
170   ! software is provided on an "as is" basis without warranty of
180   ! any kind.  It is not supported.
190   !
200   ! This program may be reproduced without prior permission, in
210   ! whole or in part, by the original purchaser.  Copies must
220   ! include the above copyright and warranty notice.
230   !
240   ! PURPOSE:
250   ! Records the total gain in decibels of a system to a leveled
260   ! input signal which is swept from 10 Hz-100 KHz in logarithmic
270   ! fashion. The total number of points is 21 counting endpoints.
280   ! The gain is referenced to the gain at 1 KHz. The results are
290   ! then plotted on the 4050A Series screen.
300   !
310   ! REQUIRED EQUIPMENT:
320   ! AA 5001 Programmable Distortion Analyzer.
330   ! SG 5010 Programmable 160 KHz Oscillator.
340   ! 4050A Series Controller
350   !
360   ! PROGRAM SEGMENT VARIABLES:
370   ! aaprim        AA 5001 primary address. Factory set to 28.
380   ! sgprim        SG 5010 primary address. Factory set to 25.
390   ! nsteps        number of frequency steps.
400   ! freqarray     array of calculated frequencies.
410   ! levarray      array of measured levels.
420   ! freqstrt      sweep starting frequency.
430   ! freqstop      sweep stop frequency.
440   ! _toleran      tolerance for Delay Until Settled algorithm.
450   ! counts        number of counts for DUS algorithm in AA 5001.
460   ! _points       number of readings to be within tolerance and
470   !               counts.
480   ! amplit        output amplitude of SG 5010.
490   ! midfreq       midband frequency.
500   !
510   ! OPERATING INSTRUCTIONS:
520   ! Connect output of SG 5010 to input of Device Under Test.
530   ! Connect output of DUT to input of AA 5001. Address of AA 5001
540   ! must be set to 28 and address of SG 5010 must be set to 25. If
550   ! addresses are different from these factory set addresses , then
560   ! variables aaprim ( AA 5001 primary address) and ssprim
570   ! (SG 5010 primary address ) must be changed accordingly.
580   !
590   ! ERRORS:
600   ! AA 5001 and SG 5010 addresses must be set to 28 and 25
610   ! respectively or program assignments of variables aaprim
620   ! and ssprim changed in program.
630   !
640   ! INSTRUMENT CONTROL:
650   ! Polls instruments on assigned addresses (AA 5001 and SG 5010).
660   !
670   ! ************************************************************
680   ! Begin main program segment
690 INIT
700 PAGE
710 Aaprim=28
720 Ssprim=25
```

Fig. 3-8. AA 5001 program example (4050A series).

Scan by Zenith


```
730 Nsteps=21
740 DIM Freqaray(Nsteps),Levaray(Nsteps)
750 Freqstrt=10
760 Freqstop=100000
770 _toleran=0.1
780 Counts=1
790 _points=6
800 Amplit=1
810 Midfreq=1000
820 Title$="GAIN VERSUS FREQUENCY"
830 Xtitle$="Frequency in Hertz"
840 Ytitle$="Gain in dB"
850 ON SRQ THEN 2180
860   !
870   ! Get frequency values for sweep.
880 CALL Sweeplog(Freqstrt,Freqstop,Nsteps,Freqaray)
890   !
900   ! Initialize Instruments
910 WBYTE @Aaprim+32,Ssprim+32:73,78,73,-84
920 WBYTE @95,63:
930   ! Lock out the AA 5001 and the SG 5010 front panels.
940 WBYTE @17:
950   ! Set up AA 5001 for LEVEL Function in volts, filters off, RMS.
960 PRINT @Aaprim:"FUNC VOLT;FILT OFF;RESP RMS"
970   ! Set up AA 5001 to delay sending a reading until settled.
980   ! Set tolerance, number of counts, and number of points.
990 PRINT @Aaprim:"DUS ON;TOL ";_toleran;";COUNTS ";Counts
1000 PRINT @Aaprim:"POINTS ";_points
1010   ! Set up SG 5010 for RMS balanced output, out on, display freq.
1020 PRINT @Ssprim:"VRMS ";Amplit;";BAL ON;OUT ON;DISP FREQ"
1030   ! Acquire gain at midband.
1040 PRINT @Ssprim:"FREQ ";Midfreq
1050 PRINT @Aaprim:"SEND"
1060 INPUT @Aaprim:Ref
1070 FOR Count=1 TO Nsteps
1080    PRINT @Ssprim:"FREQ ";Freqaray(Count)
1090    PRINT @Aaprim:"SEND"
1100    INPUT @Aaprim:Levaray(Count)
1110      ! Change reading to dB referenced to the gain at 1 KHz.
1120    Levaray(Count)=20*LGT(Levaray(Count)/Ref)
1130 NEXT Count
1140 CALL Plotloop(Nsteps,Freqaray,Levaray,Title$,Xtitle$,Ytitle$)
1150   ! Unlock all instruments on the bus.
1160 CALL "RENOFF"
1170 CALL "RENON"
1180 END
1190 SUB Sweeplog(Freqstrt,Freqstop,Nsteps,Freqaray)
1200    _steps=Nsteps-1
1210    _stepsize=(LGT(Freqstop)-LGT(Freqstrt))/_steps
1220    Index=0
1230    FOR Count=LGT(Freqstrt) TO LGT(Freqstop) STEP _stepsize
1240       Index=Index+1
1250       Freqaray(Index)=10^Count
1260    NEXT Count
1270 END SUB
1280 SUB Plotloop(Nsteps,Freqaray,Levaray,Title$,Xtitle$,Ytitle$)
1290    PAGE
1300    WINDOW 0,130,0,100
1310    VIEWPORT 0,130,0,100
1320    PRINT "I       ";Title$
1330    PRINT "JJJJJ"
1340    FOR I=1 TO LEN(Ytitle$)
1350       S$=SEG(Ytitle$,I,1)
```

Fig. 3-8 (cont). AA 5001 program example (4050A series).

Scan by Zenith


```
1360        PRINT USING 1370:S$
1370        IMAGE A/
1380     NEXT I
1390     MOVE 0,4
1400     PRINT "I              ";Xtitle$
1410     VIEWPORT 20,120,20,85
1420     Loy=Levaray(1)
1430     FOR Index=1 TO Nsteps
1440        IF Levaray(Index)<Loy THEN
1450           Loy=Levaray(Index)
1460        END IF
1470     NEXT Index
1480     Hiy=Levaray(1)
1490     FOR Index=1 TO Nsteps
1500        IF Levaray(Index)>Hiy THEN
1510           Hiy=Levaray(Index)
1520        END IF
1530     NEXT Index
1540     J=-5
1550     Flas=0
1560     DO
1570        J=J+5
1580        IF Hiy>J AND Hiy<=J+5 THEN
1590           Hiy=J+5
1600           Flas=1
1610        END IF
1620     EXIT IF Flas
1630     LOOP
1640     J=5
1650     Flas=0
1660     DO
1670        J=J-5
1680        IF Loy<J AND Loy=>J-5 THEN
1690           Loy=J-5
1700           Flas=1
1710        END IF
1720     EXIT IF Flas
1730     LOOP
1740     Dif=Hiy-Loy
1750     WINDOW 10,50,Loy,Hiy
1760     MOVE 10,Hiy
1770     DRAW 10,Loy
1780     DRAW 50,Loy
1790     DRAW 50,Hiy
1800     DRAW 10,Hiy
1810     FOR P=1 TO 4
1820        FOR Q=2 TO 10
1830           T=10*LGT(Q*10^P)
1840           MOVE T,Loy
1850           FOR Tic=Loy TO Hiy STEP 5
1860              RMOVE 0,-0.01*Dif
1870              RDRAW 0,0.02*Dif
1880              MOVE T,Tic
1890           NEXT Tic
1900        NEXT Q
1910        MOVE P*10-0.75,Loy-0.1*Dif
1920        PRINT "10"
1930        RMOVE 0.7,0.05*Dif
1940        PRINT P
1950        MOVE T,Loy
1960        DRAW T,Hiy
1970     NEXT P
1980     MOVE P*10-0.75,Loy-0.1*Dif
```

Fig. 3-8 (cont). AA 5001 program example (4050A series).

Scan by Zenith


```
1990    PRINT "10"
2000    RMOVE 0.7,0.05*Dif
2010    PRINT P
2020    FOR Hor=Low TO Hig STEP 5
2030       MOVE 4,Hor-0.01*Dif
2040       IF Hor=0 THEN 2070
2050       PRINT USING "3D.2D2A":Hor;"dB"
2060       GO TO 2080
2070       PRINT USING "2A2D":"  ";Hor
2080       MOVE 10,Hor
2090       DRAW 50,Hor
2100    NEXT Hor
2110    MOVE 10*LGT(Freqaray(1)),Levaray(1)
2120    FOR Count=2 TO Nsteps
2130       DRAW 10*LGT(Freqaray(Count)),Levaray(Count)
2140    NEXT Count
2150    HOME
2160 END SUB
2170   ! SRQ Handler
2180 DIM E$(60)
2190 Eflag=0
2200 POLL Addr,Stabyt;Aaprim;Sgprim
2210 GOSUB Addr OF 2230,2270
2220 GO TO 2590
2230 PRINT @Aaprim:"ID?;ERR?"
2240 INPUT @Aaprim:E$
2250 Addr=Aaprim
2260 GO TO 2300
2270 PRINT @Sgprim:"ID?;ERR?"
2280 INPUT @Sgprim:E$
2290 Addr=Sgprim
2300 L=POS(E$,"ERR",1)
2310 Error$=SEG(E$,L,10)
2320 Error=VAL(Error$)
2330 S$=SEG(E$,8,6)
2340 IF S$="AA5001" AND Error=601 THEN
2350    Eflag=1
2360 END IF
2370 IF S$="AA5001" AND Error=701 THEN
2380    Eflag=2
2390 END IF
2400 IF S$="AA5001" AND Error=703 THEN
2410    Eflag=3
2420 END IF
2430 IF S$="AA5001" AND Error=704 THEN
2440    Eflag=4
2450 END IF
2460 IF Eflag=1 THEN
2470    E$=E$&"Display Overrange"
2480 END IF
2490 IF Eflag=2 THEN
2500    E$=E$&"Insufficient Input Level"
2510 END IF
2520 IF Eflag=3 THEN
2530    E$=E$&"Excessive Input Level"
2540 END IF
2550 IF Eflag=4 THEN
2560    E$=E$&"Unsettled Reading"
2570 END IF
2580 PRINT E$,"ADDRESS = ";Addr,"STATUS = ";Stabyt
2590 RETURN
2600 END
```

Fig. 3-8 (cont). AA 5001 program example (4050A series).

Scan by Zenith


```
100   ! ******************************************************************
110   ! ******************** DEVICE GAIN VERSUS FREQUENCY ******************
120   ! ******************************************************************
130   !
140   ! For 4041: July 22, 1983     Revised: September 28, 1983
150   !
160   ! Copyright (c) 1983 Tektronix, Inc.  All rights reserved.  This
170   ! software is provided on an "as is" basis without warranty of
180   ! any kind.  It is not supported.
190   !
200   ! This program may be reproduced without prior permission, in whole
210   ! or in part, by the original purchaser.  Copies must include the
220   ! above copyright and warranty notice.
230   !
240   ! PURPOSE:
250   ! Records the total gain in decibels of a system to a leveled
260   ! input signal which is swept from 10 Hz to 100 KHz in logarithmic
270   ! fashion. The total number of points is 21 counting the endpoints.
280   ! The gain is referenced to the gain at 1 KHz. The results are then
290   ! printed out on the 4041 printer.
300   !
310   ! REQUIRED EQUIPMENT:
320   ! AA 5001 Programmable Distortion Analyzer.
330   ! SG 5010 Programmable 160 KHz Oscillator.
340   ! 4041 Controller (V2.0)
350   !
360   ! PROGRAM SEGMENT VARIABLES:
370   ! aaprim        AA 5001 primary address. Factory set to 28.
380   ! ssprim        SG 5010 primary address. Factory set to 25.
390   ! aa            AA 5001 logical unit number.
400   ! ss            SG 5010 logical unit number.
410   ! nsteps        number of frequency steps.
420   ! freqarray     array of calculated frequencies.
430   ! levarray      array of measured levels.
440   ! freqstrt     sweep starting frequency.
450   ! freqstop      sweep stop frequency.
460   ! toleran       tolerance for Delay Until Settled algorithm in AA 5001.
470   ! counts        number of counts for DUS algorithm in AA 5001.
480   ! points        number of readings to be within tolerance and points.
490   ! amplit        output amplitude of SG 5010.
500   ! midfreq       midband frequency.
510   !
520   ! OPERATING INSTRUCTIONS:
530   ! Connect output of SG 5010 to input of Device Under Test.
540   ! Connect output of DUT to input of AA 5001. Address of AA 5001
550   ! must be set to 28 and address of SG 5010 must be set to 25. If
560   ! addresses are different from these factory set addresses , then
570   ! variables aaprim ( AA 5001 primary address) and ssprim ( SG 5010
580   ! primary address ) must be changed accordingly.
590   !
600   ! ERRORS:
610   ! No GPIB or tape error handlers are linked so 4041 prints default system
620   ! error messages and stops if such errors occur (instrument power is off
630   ! or tape capacity exceeded, etc.).
640   !
650   ! INSTRUMENT CONTROL:
660   ! Polls all instruments on selected port.
670   !
680   ! ******************************************************************
690   ! Begin main program segment
700     Init all
710     Select "spib0:"
720     On srq then call handler
```

Fig. 3-9. AA 5001 program example (4041).

Scan by Zenith


```
 730      Integer aaprim,ssprim,aa,ss,nsteps,points
 740      Set fuzz 7,1.0E-14,14,1.0E-64
 750      Aaprim=28
 760      Ssprim=25
 770      Aa=280
 780      Ss=250
 790      Nsteps=21
 800      Dim freqaray(nsteps),levaray(nsteps)
 810      Freqstrt=10
 820      Freqstop=1.0E+5
 830      Toleran=0.1
 840      Counts=1
 850      Points=6
 860      Amplit=1
 870      Midfreq=1000.0
 880      Title$="GAIN VERSUS FREQUENCY"
 890      Xtitle$="Frequency in Hertz"
 900      Ytitle$="Gain in dB"
 910      Open #aa:"spib0(pri="&str$(aaprim)&"):"
 920      Open #ss:"spib0(pri="&str$(ssprim)&"):"
 930      Open #2000:"prin:"
 940      Enable srq
 950    !
 960    ! Get frequency values for sweep.
 970      Call logsweep(freqstrt,freqstop,nsteps,freqaray)
 980    !
 990    ! Initialize Instruments
1000      Wbyte atn(mta,aaprim+32,ssprim+32),"INIT",eoi,atn(unt,unl)
1010    ! Lock out the AA 5001 and the SG 5010 front panels.
1020      Wbyte llo
1030    ! Set up AA 5001 for LEVEL Function in volts, filters off, RMS Response.
1040      Print #aa:"FUNC VOLT;FILT OFF;RESP RMS"
1050    ! Set up AA 5001 to delay sending a reading until settled.
1060    ! Set tolerance, number of counts, and number of points for DUS algorithm.
1070      Print #aa:"DUS ON;TOL";toleran,"COUNTS";counts,"POINTS";points
1080    ! Set up SG 5010 for an RMS balanced output, out on, display freq.
1090      Print #ss:"VRMS";amplit,"BAL ON;OUT ON;DISP FREQ"
1100    ! Acquire gain at midband.
1110      Print #ss:"FREQ";midfreq
1120      Input prompt "SEND" #aa:ref
1130      For count=1 to nsteps
1140        Print #ss:"FREQ";freqaray(count)
1150        Input prompt "SEND" #aa:levaray(count)
1160    ! Change reading to dB referenced to the gain at 1 KHz.
1170        Levaray(count)=20*lgt(levaray(count)/ref)
1180        Next count
1190 Out_data:     call printout(nsteps,freqaray,levaray)
1200    ! Unlock all instruments on the bus.
1210      Wbyte ren(0),ren(1)
1220      End
1300 Sub logsweep(freqstrt,freqstop,nsteps var freqaray) local steps,stepsize,index,count
1310      Integer index,steps
1320      Steps=nsteps-1
1330      Stepsize=(lgt(freqstop)-lgt(freqstrt))/steps
1340      Index=0
1350      For count=lgt(freqstrt) to lgt(freqstop) step stepsize
1360        Index=index+1
1370        Freqaray(index)=10^count
1380        Next count
1390      Return
1400      End
1500 Sub printout(nsteps,freqaray,levaray)
1510      Print using "FA4XFA" #2000:"FREQUENCY","LEVEL"
```

Fig. 3-9 (cont). AA 5001 program example (4041).

Scan by Zenith


```
1520      Print using "20A" #2000:"--------------------"
1530      For count=1 to nsteps
1540        Print using "7J2AX7.2G2A" #2000:freqaray(count),"Hz",levaray(count),"dB"
1550        Next count
1560      Return
1570      End
1600 Sub handler local e$,stabyt,addr,eflag
1610      Dim e$ to 60
1620      Eflag=0
1630      Poll stabyt,addr
1640      Input prompt "ID?;ERR?" #addr:e$
1650      If seg$(e$,8,6)="AA5001" and valc(e$,pos(e$,"ERR",1))=601 then eflag=1
1660      If seg$(e$,8,6)="AA5001" and valc(e$,pos(e$,"ERR",1))=701 then eflag=2
1670      If seg$(e$,8,6)="AA5001" and valc(e$,pos(e$,"ERR",1))=703 then eflag=3
1680      If seg$(e$,8,6)="AA5001" and valc(e$,pos(e$,"ERR",1))=704 then eflag=4
1690      If eflag=1 then e$=e$&"Display Overrange"
1700      If eflag=2 then e$=e$&"Insufficient Input Level"
1710      If eflag=3 then e$=e$&"Excessive Input Level"
1720      If eflag=4 then e$=e$&"Unsettled Reading"
1730      Print using "FAL=FA2DL=FA3DL" #2000:e$,"ADDRESS = ",addr,"STATUS = ",stabyt
1740      Resume
1750      End
```

Fig. 3-9 (cont). AA 5001 program example (4041).

Scan by Zenith


```
100   ! ************************************************************
110   ! *************** RIAA EQUALIZATION VERIFICATION **************
120   ! ************************************************************
130   !
140   ! For 4050A Series: July 22, 1983     Revised: September 28, 1983
150   !
160   ! Copyright (c) 1983 Tektronix, Inc.  All rights reserved. This
170   ! software is provided on an "as is" basis without warranty of
180   ! any kind.  It is not supported.
190   !
200   ! This program may be reproduced without prior permission, in
210   ! whole or in part, by the original purchaser. Copies must
220   ! include the above copyright and warranty notice.
230   !
240   ! PURPOSE:
250   ! Checks the accuracy of an RIAA equalization network on playback.
260   ! The frequency is swept from 20 Hz to 20 KHz, the input
270   ! amplitude to the network is varied according to the RIAA
280   ! response equation. The output of the DUT should remain at the
290   ! level that it was at 1 KHz. The measured results are graphed as
300   ! deviation from level at 1 KHz. The total number of points is 21.
310   !
320   ! REQUIRED EQUIPMENT:
330   ! AA 5001 Programmable Distortion Analyzer.
340   ! SG 5010 Programmable 160 KHz Oscillator.
350   ! 4050A Series Controller
360   !
370   ! PROGRAM SEGMENT VARIABLES:
380   ! aaprim        AA 5001 primary address. Factory set to 28.
390   ! ssprim        SG 5010 primary address. Factory set to 25.
400   ! nsteps        number of frequency steps.
410   ! freqaray      array of calculated frequencies.
420   ! levaray       array of measured levels. Measured in volts.
430   ! riaa          array of riaa equalization parameters.
440   ! freqstrt      sweep starting frequency.
450   ! freqstop      sweep stop frequency.
460   ! _toleran      tolerance for Delay Until Settled algorithm.
470   ! counts        number of counts for DUS algorithm in AA 5001.
480   ! _points       number of readings to be within tolerance and
490   !               counts.
500   ! midamp        midband (1 KHz) output amplitude of SG 5010.
510   !
520   ! OPERATING INSTRUCTIONS:
530   ! Connect output of SG 5010 to input of Device Under Test.
540   ! Connect output of DUT to input of AA 5001. Address of AA 5001
550   ! must be set to 28 and address of SG 5010 must be set to 25.
560   ! If addresses are different from these factory set addresses,
570   ! then variables aaprim (AA 5001 primary address) and ssprim
580   ! (SG 5010 primary address ) must be changed accordingly.
590   !
600   ! ERRORS:
610   ! AA 5001 and SG 5010 addresses must be set to 28 and 25
620   ! respectively or program assignments of variables aaprim
630   ! and ssprim changed in program.
640   !
650   ! INSTRUMENT CONTROL:
660   ! Polls instruments on assigned addresses (AA 5001 and SG 5010).
670   !
680   ! ************************************************************
690   ! Begin main program segment
700 INIT
710 PAGE
720 Aaprim=28
```

Fig. 3-10. AA 5001 program example (4050A series).

Scan by Zenith


```
730 Ssprim=25
740 Nsteps=21
750 DIM Freqaray(Nsteps),Levaray(Nsteps),Riaa(Nsteps)
760 Freqstrt=20
770 Freqstop=20000
780 _toleran=0.1
790 Counts=1
800 _points=6
810 Midamp=1
820 Title$="RIAA EQUALIZATION VERIFICATION"
830 Xtitle$="Frequency in Hertz"
840 Ytitle$="Deviation in dB"
850 ON SRQ THEN 1980
860   !
870   ! Get frequency values for sweep.
880 CALL Riaaveri(Freqstrt,Freqstop,Nsteps,Freqaray,Riaa)
890   !
900   ! Initialize Instruments
910 WBYTE @Aaprim+32,Ssprim+32:73,78,73,-84
920 WBYTE @95,63:
930   ! Lock out the AA 5001 and the SG 5010 front panels.
940 WBYTE @17:
950   ! Set up AA 5001 for LEVEL Function in volts, filters off, RMS.
960 PRINT @Aaprim:"FUNC VOLT;FILT OFF;RESP RMS"
970   ! Set up AA 5001 to delay sending a reading until settled.
980   ! Set _tolerance, number of counts, and number of points.
990 PRINT @Aaprim:"DUS ON;TOL ";_toleran;";COUNTS ";Counts
1000 PRINT @Aaprim:"POINTS ";_points
1010   ! Set up SG 5010 for RMS balanced output, out on, display freq.
1020 PRINT @Ssprim:"VRMS ";Midamp;";BAL ON;OUT ON;DISP FREQ"
1030   ! Acquire gain at 1 KHz.
1040 PRINT @Ssprim:"FREQ 1E3"
1050 PRINT @Aaprim:"SEND"
1060 INPUT @Aaprim:Ref
1070 FOR Count=1 TO Nsteps
1080    PRINT @Ssprim:"AMPL ";Midamp/Riaa(Count);";FREQ ";Freqaray(Count
        )
1090    PRINT @Aaprim:"SEND"
1100    INPUT @Aaprim:Levaray(Count)
1110      ! Calculate dB level from voltage reading for added accuracy.
1120    Levaray(Count)=20*LGT(Levaray(Count)/Ref)
1130 NEXT Count
1140 CALL Plotloop(Nsteps,Freqaray,Levaray,Title$,Xtitle$,Ytitle$)
1150   ! Unlock all instruments on the bus.
1160 CALL "RENOFF"
1170 CALL "RENON"
1180 OFF SRQ
1190 END
1200 SUB Riaaveri(Freqstrt,Freqstop,Nsteps,Freqaray,Riaa)
1210    _steps=Nsteps-1
1220    _stepsize=(LGT(Freqstop)-LGT(Freqstrt))/_steps
1230    T1sq=(7.5E-5*2*PI*1000)^2
1240    T2sq=(3.184E-4*2*PI*1000)^2
1250    T3sq=(0.003184*2*PI*1000)^2
1260    Ref=SQR((1+T2sq)/((1+T1sq)*(1+T3sq)))
1270    Index=0
1280    FOR Count=LGT(Freqstrt) TO LGT(Freqstop) STEP _stepsize
1290       Index=Index+1
1300       Freqaray(Index)=10^Count
1310       T1sq=(7.5E-5*2*PI*10^Count)^2
1320       T2sq=(3.184E-4*2*PI*10^Count)^2
1330       T3sq=(0.003184*2*PI*10^Count)^2
1340       Temp=SQR((1+T2sq)/((1+T1sq)*(1+T3sq)))
```

Fig. 3-10 (cont). AA 5001 program example (4050A series).

Scan by Zenith


```
1350        Riaa(Index)=10*Temp
1360     NEXT Count
1370 END SUB
1380 SUB Plotloop(Nsteps,Freqaray,Levaray,Title$,Xtitle$,Ytitle$)
1390     PAGE
1400     WINDOW 0,130,0,100
1410     VIEWPORT 0,130,0,100
1420     PRINT "I       ";Title$
1430     PRINT "J"
1440     FOR I=1 TO LEN(Ytitle$)
1450        S$=SEG(Ytitle$,I,1)
1460        PRINT USING 1470:S$
1470        IMAGE A/
1480     NEXT I
1490     MOVE 0,4
1500     PRINT "I              ";Xtitle$
1510     VIEWPORT 20,120,20,85
1520     Loy=-1
1530     Hiy=1
1540     Dif=Hiy-Loy
1550     WINDOW 10,50,Loy,Hiy
1560     MOVE 10,Hiy
1570     DRAW 10,Loy
1580     DRAW 50,Loy
1590     DRAW 50,Hiy
1600     DRAW 10,Hiy
1610     FOR P=1 TO 4
1620        FOR Q=2 TO 10
1630           T=10*LGT(Q*10^P)
1640           MOVE T,Loy
1650           FOR Tic=Loy TO Hiy STEP 0.1*Dif
1660              RMOVE 0,-0.01*Dif
1670              RDRAW 0,0.02*Dif
1680              MOVE T,Tic
1690           NEXT Tic
1700        NEXT Q
1710        MOVE P*10-0.75,Loy-0.1*Dif
1720        PRINT "10"
1730        RMOVE 0.7,0.05*Dif
1740        PRINT P
1750        MOVE T,Loy
1760        DRAW T,Hiy
1770     NEXT P
1780     MOVE P*10-0.75,Loy-0.1*Dif
1790     PRINT "10"
1800     RMOVE 0.7,0.05*Dif
1810     PRINT P
1820     FOR Hor=Loy TO Hiy STEP 0.1*Dif
1830        MOVE 4,Hor-0.01*Dif
1840        IF Hor=0 THEN 1870
1850        PRINT USING "2D.2D2A":Hor;"dB"
1860        GO TO 1880
1870        PRINT USING "2A2D":"  ";Hor
1880        MOVE 10,Hor
1890        DRAW 50,Hor
1900     NEXT Hor
1910     MOVE 10*LGT(Freqaray(1)),Levaray(1)
1920     FOR Count=2 TO Nsteps
1930        DRAW 10*LGT(Freqaray(Count)),Levaray(Count)
1940     NEXT Count
1950     HOME
1960 END SUB
1970   ! SRQ Handler
```

Fig. 3-10 (cont). AA 5001 program example (4050A series).

Scan by Zenith


```
1980 DIM E$(60)
1990 Eflag=0
2000 POLL Addr,Stabyt;Aaprim;Ssprim
2010 GOSUB Addr OF 2030,2070
2020 GO TO 2390
2030 PRINT @Aaprim:"ID?;ERR?"
2040 INPUT @Aaprim:E$
2050 Addr=Aaprim
2060 GO TO 2100
2070 PRINT @Ssprim:"ID?;ERR?"
2080 INPUT @Ssprim:E$
2090 Addr=Ssprim
2100 L=POS(E$,"ERR",1)
2110 Error$=SEG(E$,L,10)
2120 Error=VAL(Error$)
2130 S$=SEG(E$,8,6)
2140 IF S$="AA5001" AND Error=601 THEN
2150    Eflag=1
2160 END IF
2170 IF S$="AA5001" AND Error=701 THEN
2180    Eflag=2
2190 END IF
2200 IF S$="AA5001" AND Error=703 THEN
2210    Eflag=3
2220 END IF
2230 IF S$="AA5001" AND Error=704 THEN
2240    Eflag=4
2250 END IF
2260 IF Eflag=1 THEN
2270    E$=E$&"Display Overrange"
2280 END IF
2290 IF Eflag=2 THEN
2300    E$=E$&"Insufficient Input Level"
2310 END IF
2320 IF Eflag=3 THEN
2330    E$=E$&"Excessive Input Level"
2340 END IF
2350 IF Eflag=4 THEN
2360    E$=E$&"Unsettled Reading"
2370 END IF
2380 PRINT E$,"ADDRESS = ";Addr,"STATUS = ";Stabyt
2390 RETURN
2400 END
```

Fig. 3-10 (cont). AA 5001 program example (4050A series).

Scan by Zenith


```
100   ! ******************************************************************
110   ! ****************** RIAA EQUALIZATION VERIFICATION *****************
120   ! ******************************************************************
130   !
140   ! For 4041: July 22, 1983     Revised: September 28, 1983
150   !
160   ! Copyright (c) 1983 Tektronix, Inc.  All rights reserved.  This
170   ! software is provided on an "as is" basis without warranty of
180   ! any kind.  It is not supported.
190   !
200   ! This program may be reproduced without prior permission, in whole
210   ! or in part, by the original purchaser.  Copies must include the
220   ! above copyright and warranty notice.
230   !
240   ! PURPOSE:
250   ! Checks the accuracy of an RIAA equalization network on playback. The
260   ! frequency is swept from 20 Hz to 20 KHz, the input amplitude to the
270   ! network is varied according to the RIAA response equation. The output
280   ! of the Device Under Test should remain at the same level that it was
290   ! at 1 KHz. The measured results are printed out as deviation from the
300   ! level at 1 KHz. The total number of points is 21.
310   !
320   ! REQUIRED EQUIPMENT:
330   ! AA 5001 Programmable Distortion Analyzer.
340   ! SG 5010 Programmable 160 KHz Oscillator.
350   ! 4041 Controller (V2.0)
360   !
370   ! PROGRAM SEGMENT VARIABLES:
380   ! aaprim        AA 5001 primary address. Factory set to 28.
390   ! ssprim        SG 5010 primary address. Factory set to 25.
400   ! aa            AA 5001 logical unit number.
410   ! ss            SG 5010 logical unit number.
420   ! nsteps        number of frequency steps.
430   ! freqarray     array of calculated frequencies.
440   ! levarray      array of measured levels. Measured in volts, converted to dB.
450   ! riaa          array of riaa equalization parameters.
460   ! freqstrt      sweep starting frequency.
470   ! freqstop      sweep stop frequency.
480   ! toleran       tolerance for Delay Until Settled algorithm in AA 5001.
490   ! counts        number of counts for DUS algorithm in AA 5001.
500   ! points        number of readings to be within tolerance and points.
510   ! midamp        midband (1 KHz) output amplitude of SG 5010.
520   !
530   ! OPERATING INSTRUCTIONS:
540   ! Connect output of SG 5010 to input of Device Under Test.
550   ! Connect output of DUT to input of AA 5001. Address of AA 5001
560   ! must be set to 28 and address of SG 5010 must be set to 25. If
570   ! addresses are different from these factory set addresses, then
580   ! variables aaprim ( AA 5001 primary address ) and ssprim ( SG 5010
590   ! primary address ) must be changed accordingly.
600   !
610   ! ERRORS:
620   ! No GPIB or tape error handlers are linked so 4041 prints default system
630   ! error messages and stops if such errors occur (instrument power is off
640   ! or tape capacity exceeded, etc.).
650   !
660   ! INSTRUMENT CONTROL:
670   ! Polls all instruments on selected port.
680   !
690   ! ******************************************************************
700   ! Begin main program segment
710     Init all
720     Select "gpib0:"
```

Fig. 3-11. AA 5001 program example (4041).

Scan by Zenith


```
 730      On srq then call handler
 740      Integer aaprim,ssprim,aa,ss,nsteps,points
 750      Set fuzz 7,1.0E-14,14,1.0E-64
 760      Aaprim=28
 770      Ssprim=25
 780      Aa=280
 790      Ss=250
 800      Nsteps=21
 810      Dim freqaray(nsteps),levaray(nsteps),riaa(nsteps)
 820      Freqstrt=20
 830      Freqstop=2.0E+4
 840      Toleran=0.1
 850      Counts=1
 860      Points=6
 870      Midamp=1
 880      Title$="RIAA EQUALIZATION VERIFICATION"
 890      Xtitle$="Frequency in Hertz"
 900      Ytitle$="Deviation in dB"
 910      Open #aa:"spib0(pri="&str$(aaprim)&"):"
 920      Open #ss:"spib0(pri="&str$(ssprim)&"):"
 930      Open #2000:"prin:"
 940      Enable srq
 950    !
 960    ! Get frequency values for sweep.
 970      Call riaaveri(freqstrt,freqstop,nsteps,freqaray,riaa)
 980    !
 990    ! Initialize Instruments
1000      Wbyte atn(mta,aaprim+32,ssprim+32),"INIT",eoi,atn(unt,uni)
1010    ! Lock out the AA 5001 and the SG 5010 front panels.
1020      Wbyte llo
1030    ! Set up AA 5001 for LEVEL Function in volts, filters off, RMS Response.
1040      Print #aa:"FUNC VOLT;FILT OFF;RESP RMS"
1050    ! Set up AA 5001 to delay sending a reading until settled.
1060    ! Set tolerance, number of counts, and number of points.
1070      Print #aa:"DUS ON;TOL";toleran,"COUNTS";counts,"POINTS";points
1080    ! Set up SG 5010 for an RMS balanced output, out on, display freq.
1090      Print #ss:"VRMS";midamp,"BAL ON;OUT ON;DISP FREQ"
1100    ! Acquire gain at 1 KHz.
1110      Print #ss:"FREQ 1E3"
1120      Input prompt "SEND" #aa:ref
1130      For count=1 to nsteps
1140        Print #ss:"AMPL";midamp/riaa(count),"FREQ";freqaray(count)
1150        Wait 0.5
1160        Input prompt "SEND" #aa:levaray(count)
1170    ! Calculate dB level from voltage reading for added accuracy.
1180        Levaray(count)=20*lgt(levaray(count)/ref)
1190        Next count
1200 Out_data:     call printout(nsteps,freqaray,levaray)
1210    ! Unlock all instruments on the bus.
1220      Wbyte ren(0),ren(1)
1230      End
1300 Sub riaaveri(freqstrt,freqstop,nsteps var freqaray,riaa) local steps,stepsize,index,count
1310      Integer index,steps
1320      Steps=nsteps-1
1330      Stepsize=(lgt(freqstop)-lgt(freqstrt))/steps
1340      T1sq=(7.5E-5*2*pi*1000.0)^2
1350      T2sq=(3.184E-4*2*pi*1000.0)^2
1360      T3sq=(0.003184*2*pi*1000.0)^2
1370      Ref=sqr((1+t2sq)/((1+t1sq)*(1+t3sq)))
1380      Index=0
1390      For count=lgt(freqstrt) to lgt(freqstop) step stepsize
1400        Index=index+1
1410        Freqaray(index)=10^count
```

Fig. 3-11 (cont). AA 5001 program example (4041).

Scan by Zenith


```
1420        T1sq=(7.5E-5*2*pi*10^count)^2
1430        T2sq=(3.184E-4*2*pi*10^count)^2
1440        T3sq=(0.003184*2*pi*10^count)^2
1450        Temp=sqr((1+t2sq)/((1+t1sq)*(1+t3sq)))
1460        Riaa(index)=10*temp
1470        Next count
1480      Return
1490      End
1600 Sub printout(nsteps,freqaray,levaray)
1610      Print using "FA2XFA" #2000:"FREQUENCY","DEVIATION"
1620      Print using "20A" #2000:"--------------------"
1630      For count=1 to nsteps
1640        Print using "7J2AX7.2G2A" #2000:freqaray(count),"Hz",levaray(count),"dB"
1650        Next count
1660      Return
1670      End
1700 Sub handler local e$
1710      Dim e$ to 60
1720      Eflag=0
1730      Poll stabyt,addr
1740      Input prompt "ID?;ERR?" #addr:e$
1750      If seg$(e$,8,6)="AA5001" and valc(e$,pos(e$,"ERR",1))=601 then eflag=1
1760      If seg$(e$,8,6)="AA5001" and valc(e$,pos(e$,"ERR",1))=701 then eflag=2
1770      If seg$(e$,8,6)="AA5001" and valc(e$,pos(e$,"ERR",1))=703 then eflag=3
1780      If seg$(e$,8,6)="AA5001" and valc(e$,pos(e$,"ERR",1))=704 then eflag=4
1790      If eflag=1 then e$=e$&"Display Overrange"
1800      If eflag=2 then e$=e$&"Insufficient Input Level"
1810      If eflag=3 then e$=e$&"Excessive Input Level"
1820      If eflag=4 then e$=e$&"Unsettled Reading"
1830      Print using "FAL=FA2DL=FA3DL" #2000:e$,"ADDRESS = ",addr,"STATUS = ",stabyt
1840      Resume
1850      End
```

Fig. 3-11 (cont). AA 5001 program example (4041).

Scan by Zenith


```
100   ! ************************************************************
110   ! ****** TOTAL HARMONIC DISTORTION VERSUS OUTPUT POWER *******
120   ! ************************************************************
130   !
140   ! For 4050A Series: July 22, 1983     Revised: September 28, 1983
150   !
160   ! Copyright (c) 1983 Tektronix, Inc.  All rights reserved.  This
170   ! software is provided on an "as is" basis without warranty of
180   ! any kind.  It is not supported.
190   !
200   ! This program may be reproduced without prior permission, in
210   ! whole or in part, by the original purchaser.  Copies must
220   ! include the above copyright and warranty notice.
230   !
240   ! PURPOSE:
250   ! Records the total harmonic distortion of a system to a
260   ! logarithmically increasing input signal at a frequency
270   ! determined by variable testfreq.
280   ! The voltage is increased from the value of the variable
290   ! voltstrt to the value of the variable voltstop until the
300   ! distortion is greater than or equal to the value of the
310   ! variable maxdist. When this point is reached, the output of
320   ! the SG 5010 is changed to the previous output and a
330   ! new increment size is used. This technique allows for the
340   ! definition of the knee of the curve. In order for the
350   ! algorithm to produce useful results, the value of variable
360   ! voltstop must produce a distortion equal to or greater
370   ! than the value of the variable maxdist.
380   ! The results are then plotted on  the 4050A Series screen.
390   ! The total number of points is 21.
400   !
410   ! REQUIRED EQUIPMENT:
420   ! AA 5001 Programmable Distortion Analyzer.
430   ! SG 5010 Programmable 160 KHz Oscillator.
440   ! 4050A Series Controller
450   !
460   ! PROGRAM SEGMENT VARIABLES:
470   ! aaprim        AA 5001 primary address. Factory set to 28.
480   ! ssprim        SG 5010 primary address. Factory set to 25.
490   ! nsteps        number of voltage steps.
500   ! amparay       array of programmed output levels.
510   ! thdaray       array of measured total harmonic distortion.
520   ! outaray       array of measured output.
530   ! testfreq      frequency at which Device Under Test is tested.
540   ! voltstrt      starting voltage of sweep.
550   ! voltstop      sweep stop voltage.
560   ! _toleran      tolerance for Delay Until Settled algorithm.
570   ! counts        number of counts for DUS algorithm in AA 5001.
580   ! _points       number of readings to be within tolerance
590   !               and counts.
600   ! maxdist       maximum distortion allowed to define knee.
610   ! rload         load impedance of DUT.
620   !
630   ! OPERATING INSTRUCTIONS:
640   ! Connect output of SG 5010 to input of Device Under Test.
650   ! Connect output of DUT to input of AA 5001. Address of AA 5001
660   ! must be set to 28 and address of SG 5010 must be set to 25. If
670   ! addresses are different from these factory set addresses,
680   ! variables aaprim ( AA 5001 primary address ) and ssprim
690   ! SG 5010 primary address ) must be changed accordingly.
700   !
710   ! ERRORS:
720   ! AA 5001 and SG 5010 addresses must be set to 28 and 25
```

Fig. 3-12. AA 5001 program example (4050A series).

Scan by Zenith


```
730   ! respectively or program assignment of variables aaprim
740   ! and ssprim changed in program.
750   !
760   ! INSTRUMENT CONTROL:
770   ! Polls instruments on assigned addresses (AA 5001 and SG 5010).
780   !
790   ! ******************************************************
800   ! Begin main program segment
810 INIT
820 PAGE
830 Aaprim=28
840 Ssprim=25
850 Nsteps=21
860 DIM Amparay(Nsteps),Thdaray(Nsteps),Outaray(Nsteps)
870 Voltstrt=0.02
880 Voltstop=0.2
890 _toleran=0.1
900 Counts=1
910 _points=6
920 _maxdist=1
930 Testfreq=1000
940 Rload=100000
950 Title$="THD VERSUS OUTPUT POWER"
960 Xtitle$="Output Power in Watts"
970 Ytitle$="THD in Percent"
980 ON SRQ THEN 2530
990   !
1000   ! Initialize Instruments
1010 WBYTE @Aaprim+32,Ssprim+32:73,78,73,-84
1020 WBYTE @95,63:
1030   ! Lock out the AA 5001 and the SG 5010 front panels.
1040 WBYTE @17:
1050   ! Set up AA 5001 for THD Function in percent, filters off, RMS.
1060 PRINT @Aaprim:"FUNC THDP;FILT OFF;RESP RMS"
1070   ! Set up AA 5001 to delay sending a reading until settled.
1080   ! Set tolerance, number of counts, and number of points.
1090 PRINT @Aaprim:"DUS ON;TOL ";_toleran;";COUNTS ";Counts
1100 PRINT @Aaprim:"POINTS ";_points
1110   ! Set up SG 5010 for test frequency, balanced output,
1120   ! out on, display volts RMS.
1130 PRINT @Ssprim:"FREQ ";Testfreq;";BAL ON;OUT ON;DISP VRMS"
1140 _stepsize=(LGT(Voltstop)-LGT(Voltstrt))/(Nsteps-1)
1150 PRINT @Ssprim;"VRMS ";Voltstrt
1160 Amparay(1)=Voltstrt
1170   !PRINT@AAPRIM:"FUNC VOLT;SEND"
1180 INPUT @Aaprim:Outaray(1)
1190 PRINT @Aaprim:"FUNC THDP;SEND"
1200 INPUT @Aaprim:Thdaray(1)
1210 Index=1
1220 FOR Count=LGT(Voltstrt)+_stepsize TO LGT(Voltstop) STEP _stepsize
1230    Index=Index+1
1240    PRINT @Ssprim:"VRMS ";10^Count
1250    Amparay(Index)=10^Count
1260    PRINT @Aaprim:"FUNC VOLT;SEND"
1270    INPUT @Aaprim:Outaray(Index)
1280    PRINT @Aaprim:"FUNC THDP;SEND"
1290    INPUT @Aaprim:Thdaray(Index)
1300    IF Thdaray(Index)=>_maxdist THEN 1340
1310 NEXT Count
1320 IF Index=>Nsteps THEN 1550
1330   !Resolve: Step back one step.
1340 IF Index<=2 THEN
1350    Voltstrt=Amparay(1)
```

Fig. 3-12 (cont). AA 5001 program example (4050A series).

Scan by Zenith


```
1360 ELSE
1370    Voltstrt=Amparay(Index-1)
1380 END IF
1390 Voltstop=Amparay(Index)
1400 Index=Index-1
1410 _remain=Nsteps-Index
1420 _stepsize=(LGT(Voltstop)-LGT(Voltstrt))/_remain
1430 FOR Count=LGT(Voltstrt)+_stepsize TO LGT(Voltstop) STEP _stepsize
1440    Index=Index+1
1450    PRINT @Ssprim:"VRMS ";10^Count
1460    Amparay(Index)=10^Count
1470    PRINT @Aaprim:"FUNC VOLT;SEND"
1480    INPUT @Aaprim:Outaray(Index)
1490    PRINT @Aaprim:"FUNC THDP;SEND"
1500    INPUT @Aaprim:Thdaray(Index)
1510 NEXT Count
1520 Outaray=Outaray^2
1530 Outaray=Outaray/Rload
1540   !Finish: Test done.
1550 CALL Plotloop(Nsteps,Outaray,Thdaray,Title$,Xtitle$,Ytitle$)
1560   ! Unlock all instruments on the bus.
1570 CALL "RENOFF"
1580 CALL "RENON"
1590 OFF SRQ
1600 END
1610 SUB Plotloop(Nsteps,Outaray,Thdaray,Title$,Xtitle$,Ytitle$)
1620    PAGE
1630    WINDOW 0,130,0,100
1640    VIEWPORT 0,130,0,100
1650    PRINT "I       ";Title$
1660    PRINT "J"
1670    FOR I=1 TO LEN(Ytitle$)
1680       S$=SEG(Ytitle$,I,1)
1690       PRINT USING 1700:S$
1700       IMAGE A/
1710    NEXT I
1720    MOVE 0,4
1730    PRINT "I              ";Xtitle$
1740    VIEWPORT 20,120,20,85
1750    Loy=Thdaray(1)
1760    FOR Index=1 TO Nsteps
1770       IF Thdaray(Index)<Loy THEN
1780          Loy=Thdaray(Index)
1790       END IF
1800    NEXT Index
1810    Hiy=Thdaray(1)
1820    FOR Index=1 TO Nsteps
1830       IF Thdaray(Index)>Hiy THEN
1840          Hiy=Thdaray(Index)
1850       END IF
1860    NEXT Index
1870    Hiy=INT(10*Hiy+1)/10
1880    Loy=INT(10*Loy-1)/10
1890    IF Loy<=0 THEN
1900       Loy=0
1910    END IF
1920    Dif=Hiy-Loy
1930    Lox=LGT(Outaray(1))
1940    FOR Index=1 TO Nsteps
1950       IF LGT(Outaray(Index))<Lox THEN
1960          Lox=LGT(Outaray(Index))
1970       END IF
1980    NEXT Index
```

Fig. 3-12 (cont). AA 5001 program example (4050A series).

Scan by Zenith


```
1990    Flag=0
2000    J=-1
2010    DO
2020       J=J-1
2030       IF Lox<J AND Lox=>J-1 THEN
2040          Lox=J-1
2050          Flag=1
2060       END IF
2070    EXIT IF Flag
2080    LOOP
2090    Decade=3
2100    WINDOW Lox*10,Lox*10+Decade*10,Loy,Hiy
2110    MOVE Lox*10,Hiy
2120    DRAW Lox*10,Loy
2130    DRAW Lox*10+Decade*10,Loy
2140    DRAW Lox*10+Decade*10,Hiy
2150    DRAW Lox*10,Hiy
2160    FOR P=Lox TO Lox+Decade-1
2170       FOR Q=2 TO 10
2180          T=10*LGT(Q*10^P)
2190          MOVE T,Loy
2200          FOR Tic=Loy TO Hiy STEP 0.1*Dif
2210             RMOVE 0,-0.01*Dif
2220             RDRAW 0,0.02*Dif
2230             MOVE T,Tic
2240          NEXT Tic
2250       NEXT Q
2260       MOVE P*10-0.75,Loy-0.1*Dif
2270       PRINT "10"
2280       RMOVE 0.7,0.05*Dif
2290       PRINT P
2300       MOVE T,Loy
2310       DRAW T,Hiy
2320    NEXT P
2330    MOVE P*10-0.75,Loy-0.1*Dif
2340    PRINT "10"
2350    RMOVE 0.7,0.05*Dif
2360    PRINT P
2370    FOR Hor=Loy TO Hiy STEP 0.1*Dif
2380       MOVE Lox*10-4,Hor-0.01*Dif
2390       IF Hor=0 THEN 2420
2400       PRINT USING "2D.2D2A";Hor;"%"
2410       GO TO 2430
2420       PRINT USING "2A2D";"  ";Hor
2430       MOVE Lox*10,Hor
2440       DRAW Lox*10+Decade*10,Hor
2450    NEXT Hor
2460    MOVE 10*LGT(Outaray(1)),Thdaray(1)
2470    FOR Count=2 TO Nsteps
2480       DRAW 10*LGT(Outaray(Count)),Thdaray(Count)
2490    NEXT Count
2500    HOME
2510 END SUB
2520   ! SRQ Handler
2530 DIM E$(60)
2540 Eflag=0
2550 POLL Addr,Stabyt;Aaprim;Ssprim
2560 GOSUB Addr OF 2580,2620
2570 GO TO 2940
2580 PRINT @Aaprim;"ID?;ERR?"
2590 INPUT @Aaprim;E$
2600 Addr=Aaprim
2610 GO TO 2650
```

Fig. 3-12 (cont). AA 5001 program example (4050A series).

Scan by Zenith


```
2620 PRINT @Ssprim:"ID?;ERR?"
2630 INPUT @Ssprim:E$
2640 Addr=Ssprim
2650 L=POS(E$,"ERR",1)
2660 Error$=SEG(E$,L,10)
2670 Error=VAL(Error$)
2680 S$=SEG(E$,8,6)
2690 IF S$="AA5001" AND Error=601 THEN
2700    Eflag=1
2710 END IF
2720 IF S$="AA5001" AND Error=701 THEN
2730    Eflag=2
2740 END IF
2750 IF S$="AA5001" AND Error=703 THEN
2760    Eflag=3
2770 END IF
2780 IF S$="AA5001" AND Error=704 THEN
2790    Eflag=4
2800 END IF
2810 IF Eflag=1 THEN
2820    E$=E$&"Display Overrange"
2830 END IF
2840 IF Eflag=2 THEN
2850    E$=E$&"Insufficient Input Level"
2860 END IF
2870 IF Eflag=3 THEN
2880    E$=E$&"Excessive Input Level"
2890 END IF
2900 IF Eflag=4 THEN
2910    E$=E$&"Unsettled Reading"
2920 END IF
2930 PRINT E$,"ADDRESS = ";Addr,"STATUS = ";Stabyt
2940 RETURN
2950 END
```

Fig. 3-12 (cont). AA 5001 program example (4050A series).

Scan by Zenith


```
100   ! ******************************************************************
110   ! *********** TOTAL HARMONIC DISTORTION VERSUS OUTPUT POWER ***********
120   ! ******************************************************************
130   !
140   ! For 4041: July 22, 1983     Revised: September 28, 1983
150   !
160   ! Copyright (c) 1983 Tektronix, Inc.  All rights reserved.  This
170   ! software is provided on an "as is" basis without warranty of
180   ! any kind.  It is not supported.
190   !
200   ! This program may be reproduced without prior permission, in whole
210   ! or in part, by the original purchaser.  Copies must include the
220   ! above copyright and warranty notice.
230   !
240   ! PURPOSE:
250   ! Records the total harmonic distortion of a system to a logarithmically
260   ! increasing input signal at a frequency determined by variable testfreq.
270   ! The voltage is increased from the value of the variable voltstrt to
280   ! the value of the variable voltstop until the distortion is greater than
290   ! or equal to the value of the variable maxdist. When this point is
300   ! reached, the output of the SG 5010 is changed to the previous and a
310   ! new increment size is used. This technique allows the definition of
320   ! the knee of the curve. In order for the algorithm to produce useful
330   ! results, the value of variable voltstop must produce a distortion
340   ! equal to or slightly greater than the value of the variable maxdist.
350   ! The results are then printed out on the 4041 printer. The total number
360   ! of points is 21.
370   !
380   ! REQUIRED EQUIPMENT:
390   ! AA 5001 Programmable Distortion Analyzer.
400   ! SG 5010 Programmable 160 KHz Oscillator.
410   ! 4041 Controller (V2.0)
420   !
430   ! PROGRAM SEGMENT VARIABLES:
440   ! aaprim        AA 5001 primary address. Factory set to 28.
450   ! ssprim        SG 5010 primary address. Factory set to 25.
460   ! aa            AA 5001 logical unit number.
470   ! ss            SG 5010 logical unit number.
480   ! nsteps        number of voltage steps.
490   ! amparay       array of programmed output levels.
500   ! thdaray       array of measured total harmonic distortion.
510   ! outaray       array of measured output.
520   ! testfreq      frequency at which Device Under Test is tested.
530   ! voltstrt      starting voltage of sweep.
540   ! voltstop      sweep stop voltage.
550   ! toleran       tolerance for Delay Until Settled algorithm in AA 5001.
560   ! counts        number of counts for DUS algorithm in AA 5001.
570   ! points        number of readings to be within tolerance and points.
580   ! maxdist       maximum distortion allowed to define knee of curve.
590   ! rload         load impedance of DUT.
600   !
610   ! OPERATING INSTRUCTIONS:
620   ! Connect output of SG 5010 to input of Device Under Test.
630   ! Connect output of DUT to input of AA 5001. Address of AA 5001
640   ! must be set to 28 and address of SG 5010 must be set to 25. If
650   ! addresses are different from these factory set addresses, then
660   ! variables aaprim ( AA 5001 primary address ) and ssprim (SG 5010
670   ! primary address ) must be changed accordingly.
680   !
690   ! ERRORS:
700   ! No GPIB or tape error handlers are linked so 4041 prints default system
710   ! error messages and stops if such errors occur (instrument power is off
720   ! or tape capacity exceeded, etc.).
```

Fig. 3-13. AA 5001 program example (4041).

Scan by Zenith


```
 730   !
 740   ! INSTRUMENT CONTROL:
 750   ! Polls all instruments on selected port.
 760   !
 770   ! ****************************************************************
 780   ! Begin main program segment
 790     Init all
 800     Select "gpib0:"
 810     On srq then call handler
 820     Long stepsize,count,voltstrt,voltstop
 830     Integer aaprim,ssprim,aa,ss,nsteps
 840     Set fuzz 7,1.0E-14,15,1.0E-64
 850     Aaprim=28
 860     Ssprim=25
 870     Aa=280
 880     Ss=250
 890     Nsteps=21
 900     Dim amparay(nsteps),thdaray(nsteps),outaray(nsteps)
 910     Long stepsize
 920     Voltstrt=0.02
 930     Voltstop=0.2
 940     Toleran=0.1
 950     Counts=1
 960     Points=6
 970     Maxdist=1
 980     Testfreq=1000.0
 990     Rload=1.0E+5
1000     Title$="THD VERSUS OUTPUT POWER"
1010     Xtitle$="Output Power in Watts"
1020     Ytitle$="THD in Percent"
1030     Open #aa:"gpib0(pri="&str$(aaprim)&"):"
1040     Open #ss:"gpib0(pri="&str$(ssprim)&"):"
1050     Open #2000:"prin:"
1060     Enable srq
1070   !
1080   ! Initialize Instruments
1090     Wbyte atn(mta,aaprim+32,ssprim+32),"INIT",eoi,atn(unt,unl)
1100   ! Lock out the AA 5001 and the SG 5010 front panels.
1110     Wbyte llo
1120   ! Set up AA 5001 for THD Function in percent, filters off, RMS Response.
1130     Print #aa:"FUNC THDP;FILT OFF;RESP RMS"
1140   ! Set up AA 5001 to delay sending a reading until settled.
1150   ! Set tolerance, number of counts, and number of points for DUS algorithm.
1160     Print #aa:"DUS ON;TOL";toleran,"COUNTS";counts,"POINTS";points
1170   ! Set up SG 5010 for test frequency, balanced output, out on, display volts RMS.
1180     Print #ss:"FREQ";testfreq,"BAL ON;OUT ON;DISP VRMS"
1190     Stepsize=(lgt(voltstop)-lgt(voltstrt))/(nsteps-1)
1200     Print #ss:"VRMS";voltstrt
1210     Amparay(1)=voltstrt
1220     Input prompt "FUNC VOLT;SEND" #aa:outaray(1)
1230     Input prompt "FUNC THDP;SEND" #aa:thdaray(1)
1240     Index=1
1250     For count=lgt(voltstrt)+stepsize to lgt(voltstop) step stepsize
1260       Index=index+1
1270       Print #ss:"VRMS";10^count
1280       Amparay(index)=10^count
1290       Input prompt "FUNC VOLT;SEND" #aa:outaray(index)
1300       Input prompt "FUNC THDP;SEND" #aa:thdaray(index)
1310       If thdaray(index)>=maxdist then exit to resolve
1320       Next count
1330     If index>=nsteps then goto finish
1340 Resolve:   ! Step back one steps.
1350     If index<=2 then voltstrt=amparay(1) else voltstrt=amparay(index-1)
```

Fig. 3-13 (cont). AA 5001 program example (4041).

Scan by Zenith


```
1360      Voltstop=amparay(index)
1370      Index=index-1
1380      Remain=nsteps-index
1390      Stepsize=(lst(voltstop)-lst(voltstrt))/(remain)
1400      For count=lst(voltstrt)+stepsize to lst(voltstop) step stepsize
1410        Index=index+1
1420        Print #ss:"VRMS";10^count
1430        Amparay(index)=10^count
1440        Input prompt "FUNC VOLT;SEND" #aa:outaray(index)
1450        Input prompt "FUNC THDP;SEND" #aa:thdaray(index)
1460        Next count
1470      Outaray=outaray^2/rload
1480 Finish:    ! Test done.
1490 Out_data:      call printout(nsteps,outaray,thdaray)
1500    ! Unlock all instruments on the bus.
1510      Wbyte ren(0),ren(1)
1520      End
1600 Sub printout(nsteps,outaray,thdaray) local count
1610      Print using "FA4XFA" #2000:"OUTPUT POWER","THD"
1620      Print using "20A" #2000:"--------------------"
1630      For count=1 to nsteps
1640        Print using "7JA3X7.4GA" #2000:outaray(count),"W",thdaray(count),"%"
1650        Next count
1660      Return
1670      End
1700 Sub handler local e$,stabyt,addr,eflag
1710      Dim e$ to 60
1720      Eflag=0
1730      Poll stabyt,addr
1740      Input prompt "ID?;ERR?" #addr:e$
1750      If seg$(e$,8,6)="AA5001" and valc(e$,pos(e$,"ERR",1))=601 then eflag=1
1760      If seg$(e$,8,6)="AA5001" and valc(e$,pos(e$,"ERR",1))=701 then eflag=2
1770      If seg$(e$,8,6)="AA5001" and valc(e$,pos(e$,"ERR",1))=703 then eflag=3
1780      If seg$(e$,8,6)="AA5001" and valc(e$,pos(e$,"ERR",1))=704 then eflag=4
1790      If eflag=1 then e$=e$&"Display Overrange"
1800      If eflag=2 then e$=e$&"Insufficient Input Level"
1810      If eflag=3 then e$=e$&"Excessive Input Level"
1820      If eflag=4 then e$=e$&"Unsettled Reading"
1830      Print using "FAL=FA2DL=FA3DL" #2000:e$,"ADDRESS = ",addr,"STATUS = ",stabyt
1840      Resume
1850      End
```

Fig. 3-13 (cont). AA 5001 program example (4041).

Scan by Zenith

THEORY OF OPERATION

Introduction

Refer to the block diagram located in the foldout pages of this manual for a brief description and overall view of the AA 5001 operation. A detailed circuit description follows.

Input Amplifier ◇1

The input amplifier is designed for low noise and distortion. The input configuration is differential with single-ended output. This circuit provides good common mode rejection for suppression of ground loop currents and other unwanted signals which may be present on both input leads. The input stage is also protected to withstand at least 200 V rms on any input range.

The input amplifier gain is set by the logic circuitry at 0 dB (unity), +10 dB or +20 dB. The logic circuitry controls the gain so that the signal voltage at the output of the amplifier remains between 0.75 V and 3.0 V rms. An attenuator, prior to the amplifier, provides additional gain settings from −10 dB to −40 dB in 10 dB steps. The actual gain or attenuation selected depends on the input voltage level (or the setting of the INPUT RANGE switch if not in AUTO RANGE). For example, the 200 V Input Range corresponds to 40 dB of attenuation and amplifier unity gain.

The input signal, from the front panel connections or the rear interface input (selected by front panel switch S6181) enters the input amplifier through P4070/J4070. Each input is ac coupled through C6070 or C4070. The signal then passes to the differential input attenuator hybrid, R2052. These resistors are laser trimmed and ratioed to maintain gain accuracy and common mode rejection. Relays K2052, K2060, K2061, K2070 and K2071 select attenuation from 10 dB steps. Frequency compensation of the attenuator is provided by C2061, C2051, and R2051.

When there is no attenuation (0 dB), DS3050 and DS3060 limit the input current under overload conditions. The current passing through the lamps warms their filaments, increasing their resistance. These lamps will sustain 120 Vac indefinitely and 200 Vac for at least 30 minutes. If the AA 5001 is subjected to greater overloads in the 0 dB attenuator position, the lamps act as fuses. When any attenuation other than 0 dB is selected, the resistance in the hybrid network provides current limiting. The inputs are clamped by Zener diodes VR4071 and VR4070 through four diode connected transistors Q4060, Q4061, Q4070 and Q4071 and four diodes CR4072 through CR4075. When the post attenuator voltage on any scale exceeds about ±10 V, one set of transistors turns on to limit the voltage at diode connected U4050A and B. The effect of the nonlinear capacitance of clamp diodes CR4072, CR4073, CR4074 and CR4075 is eliminated by maintaining a constant voltage across the diodes via a bootstrap arrangement from the outputs of U4050A and B.

The input signal is buffered by low noise amplifiers U4050A and U4050B. On the 0 dB through 40 dB attenuation ranges, these buffers provide unity gain. Relays K2050 and K2051 change the gain to +20 dB or +10 dB, respectively, by adding resistors R4056D or R4056E. Capacitors C4053 and C4062 provide frequency compensation.

The buffer outputs are combined into a single-ended output signal by U4061 (gain=1.5). This signal is then routed to the automatic gain control circuitry (agc) and input amplifier level detector.

The gains of the combining stage and the buffers are controlled by hybrid resistor R4056. These resistors are laser trimmed and ratioed to insure gain accuracy and common mode rejection.

The signal level at the output of the input amplifier is detected by active rectifier U4041, in conjunction with CR4041 and CR4042. This full wave rectified signal is filtered by U4042A with C3045 and routed to the logic circuitry through J1060, pin 1. Recovery from overload is provided by VR3041. Resistor R4040 sets the filter gain so that, with 2 V rms into the AA 5001 input on the 2 V scale (3 V at pin 6 of U4061) the output at pin 1 of U4042 is 6 Vdc.

The gain setting driver relays, K2052 through K2071, are driven by the inverting amplifiers within U1060. Control signals from the logic circuitry enter the input board through P1060-J1060, pins 2 through 9, with one line at a time high (about +12 V). This logic high causes a low at the output of the inverting amplifier and closes the relay. When either 0 dB, +10 dB or +20 dB (pins 6, 7 or 8) is activated, K2052 activates directly or by Q1070 and U1050B. In AUTORANGE, the logic circuitry selects the proper input attenuation or gain to maintain 0.75 V to 3.0 V at U4061 pin 6, for inputs greater than approximately 50 mV.

Scan by Zenith

Automatic Gain Control ◇2◇

The output of the input amplifier feeds the agc circuitry at levels between 0.75 V and 3.0 V for inputs greater than approximately 50 mV, and the agc automatically adjusts the signal to a constant 1.61 Vac. This is the reference level for the distortion measuring circuits.

The agc circuitry is composed of attenuator R4053, U5041, U5051, R4055, and amplifier U4051. The control element in the agc is a pair of light-dependent resistors (LDRs), U5041 and U5051. These devices consist of a light emitting diode and a semiconductor resistance cell in one package. As more control current is forced through the LEDs, the cells are illuminated more brightly and their cells resistance decreases. This causes more signal to shunt to ground.

The control circuitry for the agc consists of active rectifier, U4042B with diodes CR4052 and CR4051. The filters are composed of U4062A and U4062B and associated components. This circuitry seeks to keep the voltage at the output, pin 6 of low noise operational amplifier U4051, to approximately 1.61 V. This output voltage is varied to calibrate the THD measurements by adjusting R1051, the THD CAL control.

The output of U4051 is fullwave rectified by U4042B with diodes CR4051, CR4052 and integrated by U4062A and C5061 with the reference current from R5041 and R4042. Amplifier U4062B in conjunction with C5060, C5062, R5063, R5064 and C5063 with R5065 provides additional filtering of the rectified voltage to reduce distortion introduced by the agc action. Transistor Q5071 provides the current drive necessary for the LDRs, while VR5051 linearizes the open loop gain of the agc loop to optimize transient response at all signal amplitudes.

Notch Filter ◇2◇

The leveled output from the agc (U4051) provides the input for the notch filter. The notch is formed by summing the output of an inverting band pass filter with the input signal. See Fig. 4-1. Operational amplifier U4020, and associated resistors and capacitors comprises a multiple feedback path inverting band pass filter. Amplifier U3010A is an

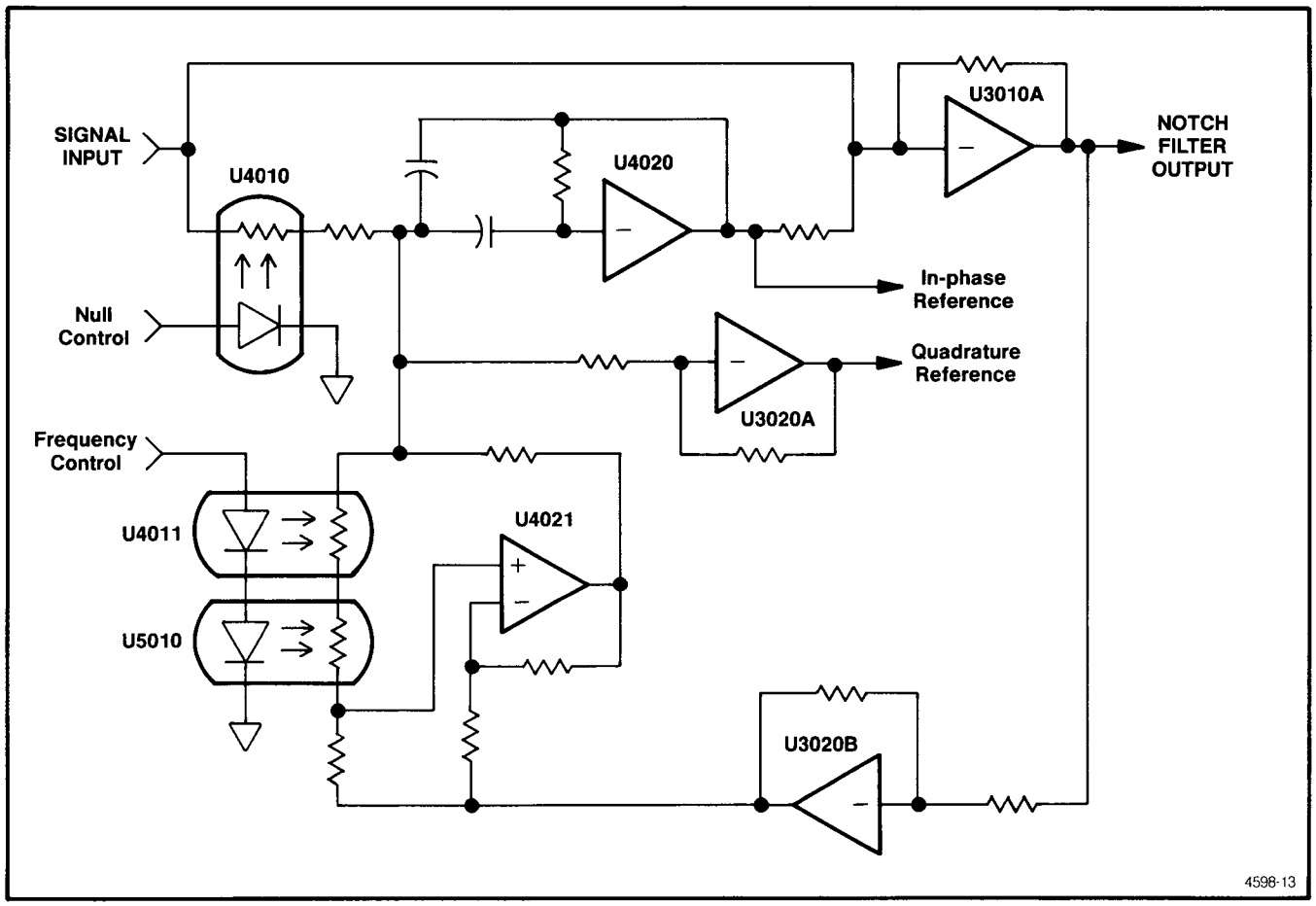

Fig. 4-1. Simplified notch filter.

Scan by Zenith

inverting summer. Filter tuning is accomplished in half decade bands by switching both resistors and capacitors. Capacitors are switched each decade. Relay K4031 is energized for input frequencies below approximately 10 kHz. When below approximately 1 kHz, K4032 is also activated, while below approximately 100 Hz, K5030, K4032, and K4031 are used. K4030 is energized in the upper half of each decade reducing the tuning resistances by a factor of 3.2 thus scaling up the frequency range by a factor of 3.2. Continuous tuning within each half decade is achieved by adjusting the impedance of an electronic resistor (U4021A and B) with LDR opto isolators U4011 and U5010. As the LDR resistance rises, the electronic resistor value decreases, at the junctions of the outputs of R3026 and R5033, raising the filter frequency.

This circuit technique, although unusual, provides a good compromise between residual noise and distortion sources inherent in U4021, and LDR's U4011 and U5010.

U3020B feeds back a portion of the notch output to the electronic resistor keeping the Q of the bandpass filter nearly constant, as it is tuned.

Minor variations in the gain of the band pass filter (which causes incomplete cancellation of the fundamental) are compensated by a third LDR, U4010. Components C4021, R5032 and C5031 provide additional gain compensation. Drive signals for the LDRs come from the control loop circuitry. Synchronization signals, to run the control loops, come from the outputs of U4020 and U3020A.

Frequency Band Discriminator ⟨5⟩

The signal from the junction of R2026 and R3021 located on schematic 2 is squared by a Schmitt trigger, composed of Q1041 and Q1042. The frequency band is determined by measuring the period of the resulting squarewave. When the input goes high, the outputs of U2050 change state. Assuming the Q outputs are high, the capacitors in the four rc networks (that are connected to the Q outputs of U2050) start to charge. The capacitor voltage on each network is compared via U2051 to a reference voltage developed across R2065, R3060, and R3061. When the input signal again goes high, the outputs of the comparators are latched in U2042. Simultaneously, the outputs of U2050 go low to discharge the capacitors in the rc networks in preparation for the next cycle.

If the period of the input is more than half the RC time constant, the capacitor voltage will be above the threshold and the comparator output is high at the transition. See Fig. 4-2. Discrimination of half decades is obtained by selecting the appropriate RC network via a CMOS switch (U2060) and comparing it to a higher reference voltage at pin 6 of U2051B. The last column in Table 4-1 shows the inputs for U2060. If the input frequency is below the band switch point of the selected decade (about 2.8 kHz for the 1 kHz to 10 kHz band) the output of U2051 is low. Resistors R2054, R3052, R2052, and R2050 provide a slight hysteresis at each decade edge, while R1515 provides hysteresis at half decade points. This hysteresis prevents random band switching when measuring signals close to the transition frequencies.

A bounce eliminator, U2041, prevents random band changes caused by grossly non-periodic signals. Capacitor C1041 sets the internal clock frequency of U2041 to approximately 100 Hz. The input state to U1400 must be stable for four clock cycles or 0.04 seconds for any change in output to occur.

Scan by Zenith

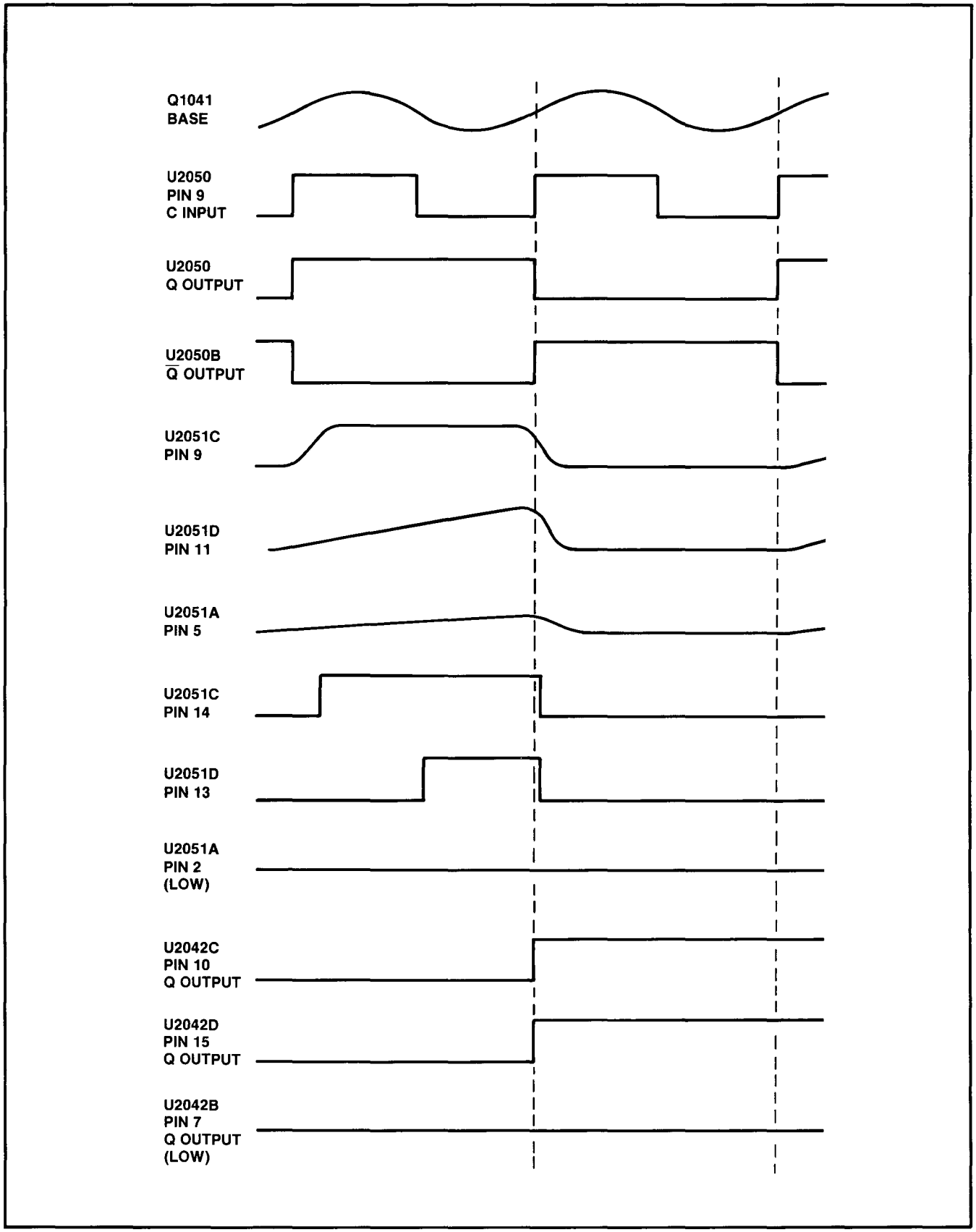

Fig. 4-2. Frequency band discriminator.

Scan by Zenith

Table 4-1
TRUTH TABLE FOR U2042 OUTPUTS

Fin (Hz)	Q 2042A pin 3	Q U2042C pin 10	Q U2042D pin 15	Q U2042B pin 7	U2060 input pin no.
10-28	L	H	H	H	4
28-95	H	H	H	H	4
95-280	L	H	H	L	12
280-950	H	H	H	L	12
950-2.8k	L	H	L	L	14
2.8k-9.5k	H	H	L	L	14
9.5k-28k	L	L	L	L	13
28k-100k	H	L	L	L	13

Notch Filter Control ◇4

The notch filter is controlled by demodulating the in-phase and quadrature phase (shifted 90 degrees) components of the notch filter output referenced to the input fundamental signal. See Fig. 4-1. The in-phase reference inputs to pin 2 of U1020A, and the quadrature phase reference inputs to pin 6 of U1020B. When the notch frequency is correctly tuned, there is no quadrature phase component at the notch filter output. When the fundamental null (maximum amplitude rejection) is adjusted correctly, there is no in-phase component in the notch filter output.

The notch filter output is amplified by U3010B and U1011B. A total of 50 dB of gain is provided by these amplifiers. Differential input to the demodulators (U1010) is provided by U1011A. The output of this amplifier stage is rectified by CR1010 and CR1011. This signal is amplified by Q2010 and filtered by C2011 to control the resistance of FET Q2011, thus providing automatic gain control. This loop serves to optimize and level the input to the demodulators that generate the tuning and nulling error voltages. The amplifier gain is raised by Q2012 in all but the lowest fundamental frequency decade.

As stated earlier, the in-phase component of the fundamental derived from the output of the bandpass filter U4020 (located on diagram 2) feeds pin 2 of U1020A. This circuitry forms a CMOS compatible logic signal to drive the CMOS multiplexer, U1010. The quadrature component of the fundamental derived from U3020A (diagram 2) similarly feeds pin 6 of U1010B. The switching arrangements of U2020 are shown in Table 4-2. The input to U2020A is switched between the inverted (pins 1 and 13) and the normal (pins 2 and 12) output of the notched filter at rate and phase determined by the in-phase signal at pin 10. The input to U2020B is also switched between the normal and inverted inputs to U1010 at a rate and phase determined by the quadrature signal at pin 11. The outputs of U1010 represent the synchronously demodulated in-phase and quadrature components of the fundamental, present in the notch output signal.

These outputs are integrated by U2020A, for the amplitude control loop and U2020B for the frequency control loop, buffered by Q2021 and Q2024, to drive the respective LDR opto-isolators in the notch filter. The net dc polarity of the signals at pins 15 and 14 determine, after passing through integrators U2020A and U2020B, the direction of frequency change and amplitude change necessary to properly set the notch frequency and null the fundamental. Adjustments R1023 and R1031 trim out the effects of offsets in the operational amplifiers enabling adjustment of the loops for best nulling of the fundamental frequency. When stabilized, the dc signal at pins 14 and 15 of U1010 is essentially 0 V.

The gain of the frequency control integrator is increased by Q2023 in all but the lowest frequency decade. Components VR2022, VR2023, R2018, C2010, CR2024, and CR2025 help speed the frequency control integrator for large control errors. VR4010 linearizes the open loop gain of the frequency control loop.

Table 4-2
INTERNAL CONNECTIONS IN U1010 DEPENDING ON LOGIC STATES OF PINS 10 AND 11

Logic Level Pins 11, 10	Internal Connections Pins
0 0	12 to 14 & 2 to 15
1 0	13 to 14 & 2 to 15
0 1	12 to 14 & 1 to 15
1 1	13 to 14 & 1 to 15

Scan by Zenith

Distortion Amplifier ④

This circuitry amplifies the distortion components from the THD notch filter or the IMD section, as well as providing additional gain for the three lowest input ranges in level function.

Multiplexer U2040, selects the input source for the distortion amplifier. The four sources are: input stage pins 5 and 15, input stage less 10 dB pins 1 and 13 (through R2033 and R2032), THD notch filter pins 2 and 4, and IMD pins 12 and 15. Control of U2040 is through the level and IMD switches, as well as the output of U3021A as shown on the schematic. In the IMD mode, Q2042 turns on. This action shorts the THD input to U2040 to prevent possible crosstalk. In both the THD and IMD, Q2041 also turns off, to prevent crosstalk.

The distortion amplifier gain is controlled by multiplexer U2031. The input to U2030B, attenuated by R2036, R2037 or R2041 is supplied from U2031. See Table 4-3. A gain of +46 dB is provided by U2030A and B. The output of U2030A supplies a 4 V rms full scale signal to the filters.

Filters and AC-DC Converters (Standard Instruments Only) ⑥

The output of the distortion amplifier enters the main board through J1042 driving the weighting filters and the distortion amplifier ranging level detector. The detector, composed of U4030A and U4030B, full wave rectifies and filters the distortion amplifier output. This dc signal goes to the logic board to control auto-ranging of the distortion amplifier.

The weighting filters consist of U2023A, U2023B, U3021B, U3021A and associated resistors and capacitors. The signal from the distortion amplifier passes through the 330 kHz filter before passing to the remaining filters. Output from the filters is multiplexed by U1021 to the input of buffer, U4020A. Table 4-4 is a truth table for U1021.

Table 4-4
TRUTH TABLE FOR U1021

B	A	ON CHANNELS		
0	0	X0	Y0	WEIGHTING
0	1	X1	Y1	BANDPASS
1	0	X2	Y2	80 kHz LOWPASS
1	1	X3	Y3	330 kHz LOWPASS

The highpass filter (three pole 400 Hz Butterworth) is composed of U4020B, C4012, C4011, C4010, R4012, R4010, and R4011. This filter is driven by U4020A. When the highpass filter is disabled, U3020 connects pins 1, 13, 14, and 15 thus shorting the output of U4020A directly to the input of U4020B. R4013, R4014, and C4013 provide 10 Hz response compensation for low frequency accuracy.

Output from the highpass filter, U4020B, connects to the front panel Function output connector and the Cy channel of U3020. The AUXILIARY INPUT on the front panel connects to the Cx input through protection components R3022, CR4020, and CR4021. U2030B connects to either the AUXILIARY INPUT or the output from U4020B depending upon the state of the EXT control signal.

After filtering, the signal is converted to a dc voltage by both rms and average techniques. Rms conversion is accomplished in U3031 (pin 10 out) using an implicit computing approach. The averaging capacitor is C3032. A low pass filter, U2040A, reduces readout jitter due to low frequency noise or ripple.

The averaging rectifier is U2030A with diodes CR2031 and CR2032. The rectified output is smoothed and filtered by U2040B, C1040, and associated components. The average detector output connects to U2040A via Q3040 in the average response mode, overriding the rms converter.

Table 4-3
GAIN AND SWITCHING THROUGH U2031

Logic Level Pins 9	10	Total Gain Through Dist Amp	U2041 Gain	Internal Connections pins
0	0	+6 dB	0 dB	13 to 12 and 3 to 1
0	1	+26 dB	0 dB	13 to 14 and 3 to 5
1	0	+46 dB	0 dB	13 to 15 and 3 to 2
1	1	+66 dB	+20 dB	13 to 11 and 3 to 4

Scan by Zenith

Filters and AC-DC Converters (Option 02 Instruments Only) 6a

The output of the distortion amplifier enters the main board through J1042 to drive the filters and the distortion amplifier ranging level detector. This detector, composed of U4030A and U4030B, full wave rectifies and filters the distortion amplifier output. This dc signal goes to the logic board to control the distortion amplifier autoranging.

The filters consist of U2023A, U2023B, U2021B, U2040A, U2040C, and U2040D with associated resistors and capacitors. The signal from the distortion amplifier passes through the 330 kHz filter before passing to the 80 kHz LO PASS and AUDIO BAND PASS filters. The weighting filter input is taken directly from the distortion amplifier output. R2035 provides gain calibration adjustment for the CCIR weighting filter. Output from the filters are multiplexed by U1021 to the input of buffer U4020A. Table 4-4 is a truth table for U1021.

The high pass filter (three pole 400 Hz Butterworth) is composed of U4020B, C4012, C4011, C4010, R4012, R4010, and R4011. This filter is driven by U4020A. When the high pass filter is disabled, U3020 connects pins 1, 13, 14, and 15, shorting the output of U4020B directly to the input of U4020B. Components R4013, R4014, and C4013 provide 10 Hz response compensation for low frequency accuracy.

Output from the high pass filter, U4020B connects to the front panel FUNCTION OUTPUT connector and the Cy channel of U3020. The AUXILIARY INPUT, on the front panel, connects to the Cx input through protecting components R3022, CR4020, and CR4021. U2030B connects to either the AUXILIARY INPUT or the output from U4020B, depending upon the state of the EXT control signal.

After filtering, the signal is converted to a dc voltage by both rms and quasi-peak techniques. Rms conversion is accomplished in U3031 (pin 10 out) using an implicit computing approach. The averaging capacitor is C3032. A low pass filter, U2021A, reduces readout jitter due to low frequency noise or ripple.

The quasi-peak convertor consists of full wave rectifier U2040B, peak detector U4031 and U3030A, and averager U3030B and their related circuitry. The input to the full wave rectifier is normally connected through R2022, except for the special case of simultaneous CCIR weighting filter and quasi-peak response selections. In this case, Q2021 turns on directly connecting the output of the CCIR weighting filter from U2040A to the full wave rectifier. This causes a gain calibration shift of the weighting filter, depending upon the response selection. With RMS response, the 0 dB frequency is nominally 2.0 kHz. However, with quasi-peak response, it shifts to 1.0 kHz.

The output from the full wave rectifier, U2040B, passes to pin 2 of U4031. This circuitry rapidly charges C3053 to the peak value of the input waveform. This peak voltage is referenced to the input through U3030A with R4055, providing gain calibration adjustment. U3030B, C3052, and R3033 low-pass filter the charged peaks on C3053 and pass the signal on to the peak hold circuit, composed of U3030D and U3030C.

The purpose of the peak hold circuit is to allow short peak pulses to be accurately measured and displayed on the digital readout. Capacitor C3038 is charged to positive peaks through CR4033 until U3030D inputs at pins 12 and 13 are nearly equal. C4031 is also charged through CR4034. When the peak disappears, CR4033 reverse biases, and C3038 maintains the peak voltage which is buffered through U3030C and connected to the convertor output through Q3040 and U2021A. The voltage across C4031 decays through R4035 generating approximately 1 second time delay. The voltage across C3038 remains constant until the voltage across C4031 drops to about 7 V below the level on C3038. C3038 then discharges through Q4030, operating as a low leakage zener diode. The quasi-peak detector output connects to U2021A via Q3040, in the quasi-peak response mode, overriding the rms converter.

dB Converter 8

The dB section is fed by the dc output voltage from the selected detector. Shown on this schematic are the dB converter, dB/Volts switch, offset generator, dB ratio circuit, and a voltage reference.

The dB converter consists of quad operational amplifier U4111, transistor array U5101 and associated circuitry. The input to the converter is a 0-4 V dc signal from the selected detector and a 6 V reference. The output is a dc signal at U4111 pin 1. This signal is proportional to the log of the ratio of the dc input signal to the reference voltage as described in the relationship:

$$E = K \times \log \frac{Ic \text{ for } U5101A}{Ic \text{ for } U5101B}$$

K is a constant and Ic is the noted collector current. The converter output is zero when the input voltage is 1.549 V, with a scale factor of −100 mV/dB.

Operational amplifier U4111D provides a constant collector current in U5101B while holding the collector voltage at 0. The collector voltage of U5101A is held at 0 V by the action of U4111C. The collector current in U5101A varies with the input voltage. When the two collector currents are

Scan by Zenith

equal (at Vin = 1.549 Volts), U5101A pin 2 is at 0 V and U4111C pin 8 is at 0 V. The offset voltage of the differential pair and U4111A is adjusted by R8101 (0 dB Adjust), which sets the 0 dB output level. Compensation for the offset voltage of U4111C (−40 dB Adjust) is provided by R8091. This provides correct log conformity at low input voltages. Inversion of the dB output is provided by U4111A. Pin 1 of U4111A also provides the dB voltage to the bar graph display.

The three remaining transistors in U5101 serve as heaters to maintain the differential pair (U5101A and B) at a constant junction temperature. The voltage at U5101 pin 3 is proportional to the internal temperature of U5101. This voltage is compared with the reference voltage and any error is amplified by U4111B. The amplified error signal drives Q3111 which supplies current to the heater transistors. The −20 dB Adjust, R2161, sets the internal junction temperature of the differential pair for the correct scale factor.

dB Offset Generator ⟨7⟩

The offset generator consists of U4121, U7101 and R7101. This circuitry provides a dc offset voltage that is added to the log converter output at the input of operational amplifier U4121C. This voltage is set by input from the logic section and corrects dB measurements for the overall gain in the signal path.

The reference voltage is divided by R7101 into six offset voltages. Multiplexer U7101 selects one of these six voltages (or ground) and supplies it to U4121D. The gain setting resistor for U4121D, as well as a resistor in series with its output, is included in R7101. The offset output is supplied to U4121C through R8111.

This signal is routed to U2151, a multiplexer, which selects the dB-processed voltage (+10 mV/dB) or the voltage directly from the selected detector. This voltage is supplied to the DVM section. In the distortion modes, R3173 provides a small offset so that the 0 dB reference is changed from 0.775 V (0 dBm) to 1 V corresponding to 100%. In the dB ratio mode, U4121C also adds the stored reference voltage from the dBr section supplied via pin 5 of U2151.

dB Ratio Circuitry ⟨7⟩

The dB ratio circuitry allows selection of any input voltage as the 0 dB reference. This is accomplished by adding a dc offset voltage from pin 15 of R7121 to pin 9 of U4121 through multiplexer U2151C. This causes 0 V at pin 8 of U4121C at the desired reference input voltage.

Amplifiers U6121C and D with resistor network R7121 form a digital-to-analog converter which supplies the dc offset to the input of U4121C. This converter is driven by an 11 bit binary counter composed of U6111 and U7111. This counter is controlled by dual flip-flop U7161B which is supplied with a clock signal from the gated oscillator composed of U7151A and B.

When the dB ratio button is pushed (grounded), a debounce circuit, composed of U7151C and D, causes pin 3 of U7161A to go high. A short time later, determined by R8131 and C8135, pin 4 of U7161A goes high, terminating the high at pin 1. A positive pulse appears at U7161 pin 1, resetting counters U6111 and U7111 and flip-flop U7161B. This allows the oscillator to start. The oscillator increments the counters changing the voltage offset. When the 0 dB reference button is pushed, the counter starts with the most negative voltage offset and increments in the positive direction. The output of U4121C connects to comparator U6121B. When the output of U4121C is 0 V, U6121B pin 7 goes high, causing U7161B pin 12 to go low at the next clock pulse. This action stops the oscillator. Future dBr readings are referenced to this voltage. Pin 1 of U6121A goes positive a short time before U6121B pin 7. This switches the oscillator to a lower frequency through Q8161 and C7135 to prevent the circuits from overshooting the correct value.

6 V Reference ⟨7⟩

A 6 V reference voltage to the dB converter, offset generator, dBr section, and dvm is provided by U4121A and VR2143.

DVM ⟨8⟩

The DVM section accepts the dc voltage from the dB converter or directly from the ac selected to dc converter and drives the digital display. The dvm input is proportional to the input signal voltage, the percent distortion or the log (dB) of the selected function. An LSI analog-to-digital converter with display drivers, U2050, drives the respective segments in LED display. Overrange indication is supplied internally in U2050. Reference voltage adjustment for the correct full scale reading is provided by R2064. Other external components support the internal operation of U2050.

The most significant LED module, DS1022, is controlled by U1060D and Q1060. This digit displays blank, 1 or 0. The 0 is displayed only in the 0.2% distortion range.

If a decimal point is needed in LED display DS1021, pin 2 of U1060A is low. This assures that pin 11 of U1060D is also low and illuminates the two segments comprising the one (1) in the most significant digit module, DS1022. Pin 19 of U2050 is high when a 0 is required and low when a 1 is required. The one is changed to a zero by illuminating an additional four segments of DS1022. The minus sign to the

Scan by Zenith

left of the most significant digit 15 of R1333 to pin 9 of U1313C. This causes 0 V at pin 8 of U1313C at the desired reference input voltage.

The ten operational amplifiers, U3050A, B, U3051 and U3062 comprise the drivers for the bar graph display. The analog signal from the dB converter is applied to the negative inputs of these amplifiers. The input resistance dividers are selected so that only one operational amplifier at a time is operating in the linear region. There is approximately 2.5 dB between each segment, with a slight overlap from one segment to the next.

Display Board ⟨9⟩

The four LED digit display modules and the sign module are illuminated by lowering the cathode voltages. The display module anodes and the state LEDs are operated from +5 V.

Pins 11 through 20 of DS1010, the bar graph display, are connected to −15 V. Pins 1 through 10 are driven by operational amplifiers in conformance with the analog signal strength.

Logic Circuitry ⟨10⟩ ⟨11⟩ ⟨12⟩

The input signals to the logic section come from the front panel switches, the input stage level detector, GPIB circuitry and the distortion amplifier level detector. The logic circuitry controls the gain of the input stage and distortion amplifier, the dB offset generator, location of the decimal points and the function annunicator LEDs.

Diagram 10 shows the logic switching circuitry.

On diagram 11 a presettable up-down counter, U7011, controls the gain of the input stage. In the manual ranges, the preset inputs are enabled by S4171-4. The proper input level range signals are supplied by S4171-1, 2, and 3. In the auto range position, the counter accepts clock inputs from level comparators U5081A and B. These signals pass from U7011 to U3011. They are decoded in U3011, a bcd-to-decimal decoder, to drive the input stage gain control lines.

A dc signal, proportional to the input signal amplitude, appears at pin 4 of U5081A. The bias voltages on pins 5 and 6 of U5081A and B are such that pin 2 of U5081A goes low when the input signal is higher than the range the input stage is presently in. This low appears at pin 10 of U7011 which causes the binary up-down counter to count down. If the input attenuator is in the least sensitive range, a high exists on pin 1 of U7021A. A low then exists on pin 3 of U7021A which prevents the underrange LED from being illuminated. Pin 1 of U5081B is low when the input signal is lower than the input attenuator range. Pin 6 of U7021B is high in the most sensitive range. The up-down counter counts only when pin 5 is low. This occurs when the input signal level is higher than the attenuator range and the unit is not in the least sensitive position, or when the input signal is lower than the input attenuator range and the unit is not in the most sensitive range. The overrange and underrange LEDs are illuminated through Q2181 and Q2183 respectively. When the bases of these transistors are high, through the outputs of U7021A and U7021B, the lights are illuminated. The increase range and decrease range lights are also controlled by the distortion amplifier gain in the level mode.

U3021 decodes the odd 10 dB steps in the input stage gain and supplies this information to the distortion amplifier control and to U5011 for decimal point and offset formatting purposes.

Distortion amplifier gain is controlled in a manner similar to the input circuitry gain. U5081C, and U5081D are the level comparator and U7071A, U7071B, and U7071D perform the enable gating function.

The gain control input for the distortion amplifier is selected by U7041, a 4 bit and/or selector. In the level mode pin 9 is high, pin 14 is low, and pins 6, 4, and 2 are routed to the outputs. This selects the Input Level Range Switch, S4171, as the gain control input. In the distortion modes, pin 14 is high, 9 is low and 7, 5, and 3 are connected to the output. The distortion range switches now control the gain.

The signals from and to U7021C control the switching of U7041. A dc voltage proportional to the output of the distortion amplifier connects to pin 11 of U5081D. The operation of U5081 and U7071 are identical as described for the input stage up/down counter. These gates control up/down counter, U7061, for the distortion amplifier gain. A three-to-eight decoder driver, U5071, supplies decimal output for the distortion amplifier gain control circuitry.

A binary adder, U5011, shown on schematic 12, sums the gain of the input stage and the distortion amplifier. Pins 7, 5, 3 and 6 provide input stage gain information. Pins 4 and 2 provide distortion amplifier gain information. This sum is decoded by U5021, and passes through CR5031, CR5033 and CR5037. These diodes drive U3021B and U4061 to operate the μV, mV, and Volts annunicator LEDs. The control source for the decimal points is selected by U3041, a 4 bit and/or selector which operates as a multiplexer. In the volts mode, the decimal points are controlled by the decoded decimal information from U5021 and the

Scan by Zenith

diodes. In the distortion modes, the decimal points are controlled by the distortion amplifier gain. Gain information from the distortion amplifier appears at 1, 3, 5 and 7. In the dB modes, U3041 is disabled, and Q2063 is turned on by U4071A or U4071B. This illuminates the proper decimal point for all dB displays.

A 4 bit and/or selector (U5061) operating as a multiplexer, selects the control source for the dB offset generator. In the lever mode, the offset is controlled by the sum at the output of U5011. In the distortion modes, U5061 is controlled by the distortion amplifier gain.

Power Supplies 13

There are three operating voltages in the AA 5001: + and −15 V dc and +5 V dc. The ±15 V supplies the operational amplifiers, linear circuitry and CMOS, while +5 V is used for the logic and display circuitry.

The +5 V dc supply is derived from the +8 V dc supply in the mainframe. A three terminal voltage regulator, U4040, provides +5 V and includes built-in current limiting. Additional overcurrent protection is provided by F4062. R3047 provides adjustment of the voltage to a nominal value of +5.25 V measured at TP3041.

The +15 V dc supply is regulated from the +26 V dc mainframe supply. The reference voltage, against which the regulator output, divided down by R3043 and R3044 is compared, is supplied by VR3041. Errors between the reference voltage and divided output are amplified by U4041B and Q4050. The mainframe NPN transistor and Q3051 form a Darlington series-pass transistor. Frequency compensation for stability is provided by R4050 and C4050. Current limiting is accomplished by Q3050 which senses the voltage across R3053. When the current delivered by the +15 V supply exceeds about 500 mA, Q3050 turns on. This shunts base drive current from Q3051 lowering the output voltage. Fuse F4060 provides additional protection.

The −15 V is supplied from the −26 V dc in the mainframe. Amplifier U4041A compares the regulated +15 V supply with the −15 V through R4041 and R4042. Voltage differences are amplified by U4041 and Q4051. The mainframe PNP transistor and Q4052 form a Darlington series-pass transistor. Frequency compensation for stability is provided by R4054 and C4051. Current limiting is accomplished by Q4044 which senses the current through R4053. When the current delivered by the −15 V supply exceeds about 500 mA, Q4053 turns on. This shunts base drive current away from Q4052 and lowers the output voltage of the power supply. Fuse F4061 provides additional protection.

Interface 13

This circuitry provides an interface between the microprocessor and the Logic Switches shown on schematic 10.

Data on the state of the filter switches as well as the Mode Defeat, Response Drive, IMD Drive and Level Drive input at inputs D0 through D7 on U3010. This integrated circuit is a data selector-multiplexer. The input to be read is selected by lines A, B and C. Data output to the processor is via pin 5.

The filters are controlled via the front panel or the GPIB. The four lines mentioned earlier under this heading are controlled via the processor. This control from the processor passes through U1010, an eight bit addressable latch. The output lines are selected by input lines connected to A, B or C. The status of the output line selected to the latch at pin 13. The output of U1010 can override the front panel filter switches as 20 kΩ resistors are connected between the switches and the level shifters.

Level shifters U2020 and U1020 provide logic compatible voltage levels for the driven circuitry.

IM Analyzer 14

The IMD Analyzer is block diagrammed in Fig. 4-3. In the difference frequency distortion mode (CCIF) the analyzer is a 1.1 kHz 9-pole Butterworth low pass filter. Two poles of this filter are provided by U3081B and associated components. The CCIF signal then passes to the level sensor composed of Q7071, CR5083 and C6071. Depending on the position of jumper P1053 and the amplitude of low frequency components at the anode of CR5083, multiplexer U8051 selects the output from the SMPTE/DIN demodulator at pin 2 or the partially filtered CCIF signal at pin 3. If approximately 1 V or more of low frequency signal is present at the anode of CR5083, Q7071 turns on. If the jumper is in the automatic position, the collector of U7071 goes low. This lowers pins 9, 10, and 11 of U1240 and connects pin 2 to pin 14, the output. In the CCIF mode, there is little power below 1.0 kHz. Under these conditions Q7071 is off, and pin 3 is connected to pin 14 of U8051.

The output of U8051 feeds buffer U6051B. The signals then pass through the remaining 7 poles of the 1.1 kHz low pass filter, comprised of U6051A, U6041A and U6041B, to the distortion amplifier.

In the SMPTE/DIN mode, the input signal passes through 7 poles of a 2 kHz high pass filter to remove the low

Scan by Zenith

frequency tone. This filter is composed of U3081A, U3061B and U3061A. The signal is full-wave rectified by U3041A and applied to the input of a voltage controlled amplifier U3041B. To maintain a constant signal amplitude of 3.6 V dc, U3031A integrates the difference between this signal and a dc reference voltage. The current through the LED in gain control resistor U2041 maintains the gain of U3041B so that the output is at 3.6 Vdc. The rectifier signal contains the demodulated SMPTE/DIN IM distortion product and passes through a 30 Hz two pole high pass filter comprised of C2021, C2011, R3021 and R3023 to the input of U3031B. This amplifier, along with C5021, C5023, C3031, and C3033 forms the first two poles of the 9-pole 1.1 kHz low pass filter. Pin 7 of U3031B connects to multiplexer U8051. From this point, the signal is processed exactly the same as the CCIF signal.

GPIB Circuitry (15)

The microprocessor, U4020, is an eight bit parallel processor with a 16 bit address bus. Two 1024 X 4 RAMS, U3034 and U3043, and one 8192 X 8 ROM, U4030, comprise the microprocessor external memory. The GPIB address switch, S3013, connects to the data bus via U3023, a tri-state buffer. When pins 19 and 1 are low the logic appearing on the A inputs output to the data bus.

The decimal point illuminated appears as a low on the A1 through A4 inputs of U1044. A5 is not used at present. A6 and A7 is the output from the eight channel decoders, U2045 and U2046 that read the illuminated display segments. U2035A and U2035B serve as level shifters from the eight line display segment decoders. Address decoding is accomplished by U2034.

The data bus connects to U3041, an octal flip-flop. The output from this flip-flop drives open collector inverter U3040. The output from this inverter drives the Logic Switch (schematic 10) and Autorange Control Logic (schematic 11) circuitry.

Various displays data input to the microprocessor via buffer U1031. GPIB communications are controlled by U2022, U2021 and U1020. Bidirectional buffers U2021 and U1020 provide drive capability for U2022, the GPIB interface. The IEEE 488-1978 standard protocol is handled automatically in both talker and listener modes by U2022.

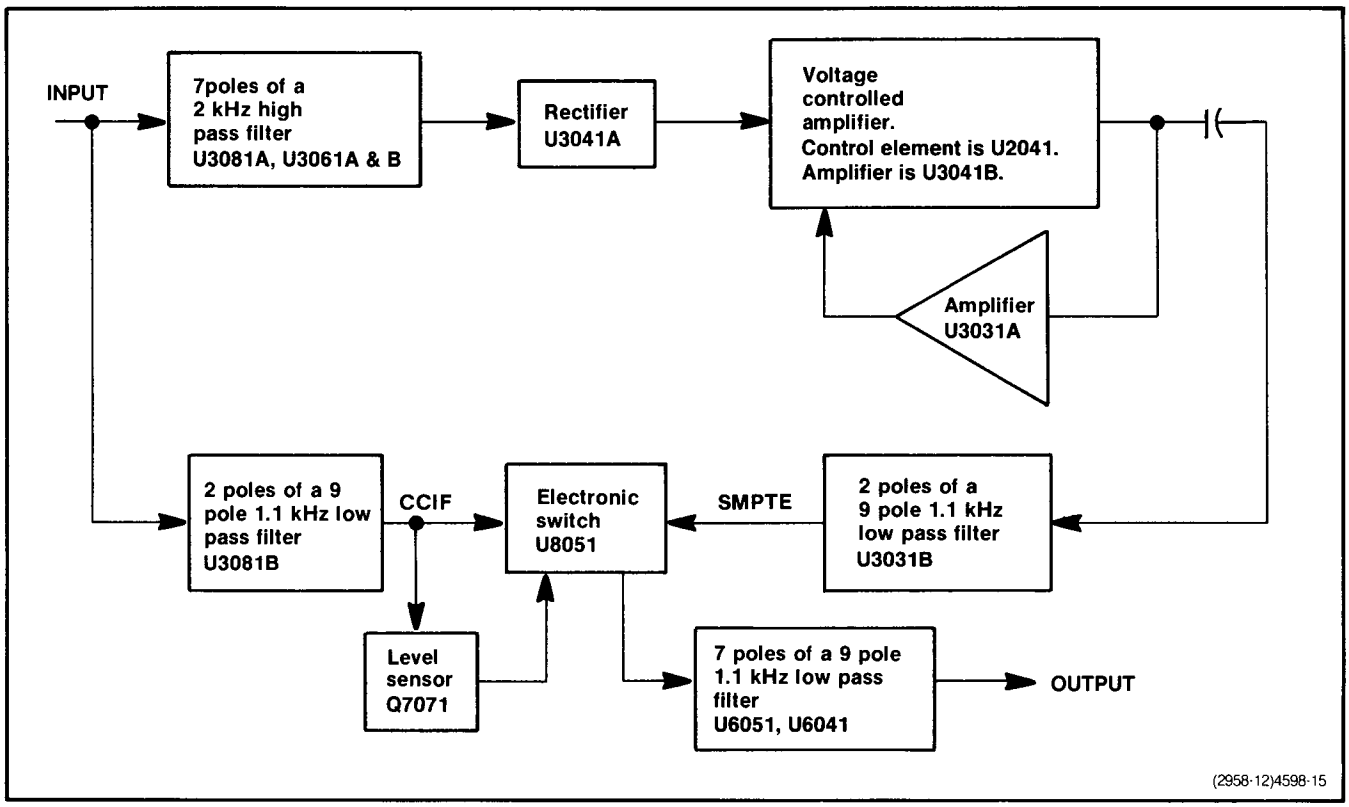

Fig. 4-3. Intermodulation distortion analyzer block diagram.

Scan by Zenith

CALIBRATION
PERFORMANCE CHECK

Introduction

This procedure checks the electrical performance requirements as listed in the Specifications section of this manual and may be used in an incoming inspection facility to determine acceptability of performance. If the instrument fails to meet the requirements given in this Performance Check section, the Adjustments Procedure section should be performed. Refer to the Parts Location Grid in the pull-out pages for the following Checks and Procedures. This procedure can be performed at any ambient temperature between 0°C to 50°C.

Performance Check Interval

The performance check should be performed at the following intervals:

- At incoming inspection
- After 2000 hours of operation or every 12 months, if used infrequently
- After repair or accidental abuse.

Services Available

Tektronix, Inc. provides complete instrument repair facilities at local field service centers and at the factory service center. Contact your local Tektronix Field Office or representative for more information.

Test Equipment Required

The test equipment, or equivalent (except as noted) listed in Table 5-1 is suggested to perform the Performance Check and the Adjustment Procedure in this manual.

Table 5-1
Suggested Test Equipment

Description	Minimum Requirements	Example
Low distortion Sinewave oscillator	0.001% THD, 20 Hz to 20 KHz; 0.01% THD 10 Hz to 100 KHz; 60 mV to 6 V RMS;IM test signal capability	Tektronix SG 5010 programmable oscillator or two SG 505 oscillators (one must have Option 01)
Function generator	10 Hz to 500 KHz sinewave, triggerable tone burst capability	Tektronix FG 501A or FG 504
Controller	GPIB compatibile	TEKTRONIX 4052A or 4041
AC Voltage Calibrator	100 μV to 180 V; 10 Hz to 100 KHz	[a]Fluke 5200A and 5205A
General Purpose Digital Multimeter	0.5% AC volts at 1 KHz, 0.2% dc volts and ohms	Tektronix DM 501A
General Purpose Counter	10 Hz to 500 KHz, 0.01%	Tektronix DC 509 or DC 504A
Adapter, BNC female to dual Banana adapter		Tektronix Part No. 103-0090-00
BNC T-adapter		Tektronix Part No. 103-0030-00
BNC connectors, 50 Ω coaxal cables 42 inch, 2 ea.		Tektronix Part No. 012-0057-01
6 inch banana-to-banana Patch Cord		Tektronix Part No. 012-0024-00
50 Ω Feedthrough Termination		Tektronix Part No. 011-0049-01
50 Ω 10X Attenuator, 3 ea.		Tektronix Part No. 011-0059-01
1 MΩ/20 pF input Normalizer		Tektronix Part No. 067-0538-00

[a]Model 5101B-03 may be substituted for the 5200A; however its specified accuracy derates to 2.0% at 1 mV (20 Hz to 20 KHz). Amplitude accuracy should be independently verified.

Scan by Zenith

Performance Check Steps

1. Check Input Impedance
2. Check Common Mode Rejection
3. Check Volts Accuracy
4. Check dBm Accuracy and Flatness
5. Check Bandwidth
6. Check Filters Response Accuracy
7. Check Residual Noise
8. Check THD+N Accuracy
9. Check SMPTE/DIN IM Accuracy
10. Check CCIF IM Accuracy
11. Check Residual THD+N
12. Check Residual SMPTE/DIN IMD
13. Check Residual CCIF IMD
14. Check Q-PK Response Dynamic Characteristic (Opt. 02 only)
15. Check Input Monitor
16. Check Function Output
17. Check Auxiliary Input
18. Check GPIB Operation

NOTE

The AA 5001 has selectable measurement response. Unless specifically noted, all performance specifications and checks are valid using rms response only.

AA 5001 Performance Check Summary

Serial Number: _____ **Notes:** _____

Date: _____ _____

STEP #	CHECK	ALLOWABLE LIMITS	ACTUAL VALUE
1.	**Input Impedance**		
	+ Input	98.0 to 102.0 kΩ	
	− Input	98.0 to 102.0 kΩ	
2.	**Common Mode Rejection**		
	50 mV (200 μV range)	≤1.58 V	
	50 mV (2 mV range)	≤158 mV	
	50 mV (20 mV range)	≤15.8 mV	
	100 mV (200 mV range)	≤3.2 mV	
	300 mV (600 mV range)	≤1.0 mV	
	1 V (2 V range)	≤3.2 mV	
	3 V (6 V range)	≤1.0 mV	
	10 V (20 V range)	≤3.2 mV	
	30 V (60 V range)	≤1.0 mV	
	100 V (200 V range)	≤3.2 mV	

Scan by Zenith

STEP #	CHECK	ALLOWABLE LIMITS	ACTUAL VALUE
3.	**Volts Accuracy**		
	A. 20 Hz to 20 kHz band	20 Hz 1 kHz 20 kHz	
	100 μV (200 μV range)	97.9 to 102.1 μV	
	1.8 mV (2 mV range)	1.763 to 1.837 mV	
	18 mV (20 mV range)	17.63 to 18.37 mV	
	180 mV (200 mV range)	176.3 to 183.7 mV	
	500 mV (600 mV range)	489 to 511 mV	
	1.800 V (2 V range)	1.763 to 1.837 V	
	5.00 V (6 V range)	4.89 to 5.11	
	18.00 V (20 V range)	17.63 to 18.37	
	50.0 V (60 V range)	48.9 to 51.1	
	80.0 V (200 V range)	176.3 to 183.7	
	B. 10 Hz to 100 kHz	10 Hz 100 kHz	
	100 μV (200 μV range)	95.8 to 104.2 μV	
	1.8 mV (2 mV range)	1.727 to 1.873 mV	
	18 mV (20 mV range)	17.27 to 18.73 mV	
	180 mV (200 mV range)	172.7 to 187.3 mV	
	500 mV (600 mV range)	479 to 521 mV	
	1.800 V (2 V range)	1.727 to 1.873 V	
	5.00 V (6 V range)	4.79 to 5.21	
	18.00 V (20 V range)	17.27 to 18.73	
	50.00 V (60 V range)	47.9 to 52.1	
	180.00 V (200 V range)	172.7 to 187.3	
4.	**dBm Accuracy and Flatness**		
	A. 0.7746 V, 1 kHz	−0.2 to +0.2 dBm	
	24.50 mV, 1 kHz	−30.3 to −29.7 dBm	
	B. Flatness		
	10 Hz	−0.3 to +0.3 dB	
	20 Hz	−0.1 to +0.1 dB	
	20 kHz	−0.1 to +0.1 dB	
	100 kHz	−0.3 to +0.3 dB	
	C. 100 dB Ratio Accuracy	−100.4 to −99.6 dB	
5.	**Bandwidth**	⩾300 kHz	

Scan by Zenith

STEP #	CHECK	ALLOWABLE LIMITS	ACTUAL VALUE
6.	**Filters Response Accuracy**		
	A. 400 Hz HI PASS −3 dB	380 to 420 Hz	
	60 Hz rejection	≤ −40 dB	
	B. 80 KHz LO PASS −3 dB	76 to 84 kHz	
	C. AUDIO BANDPASS		
	Upper −3 dB	21.28 to 23.52 kHz	
	Lower −3 dB	21.28 to 23.52 Hz	
	D. A WTG (std only)		
	100 Hz	−20.1 to −18.1 dB	
	1 kHz	−1.0 to +1.0 dB	
	10 kHz	−6.5 to −0.5 dB	
	E. CCIR WTG (Opt 02 only)		
	100 Hz	−20.8 to −18.8 dB	
	1 kHz	−0.5 to +0.5 dB	
	10 KHz	+7.3 to +8.9 dB	
	20 KHz	−24.2 to −20.2 dB	
	Q-PK 1 kHz cal	−0.2 to +0.2 dB	
	RMS 2 kHz cal	−0.3 to +0.3 dB	
7.	**Residual Noise**		
	400 Hz −80 kHz	≤3.0 μV	
	A WTG (std only)	≤1.5 μV	
	CCIR WTG (Opt 02 only with Q-PK response)	≤5.0 μV	
8.	**Total Harmonic Distortion Accuracy**		
	A. 20 Hz fundamental		
	40 Hz	0.900 to 1.100%	
	60 Hz	0.900 to 1.100%	
	80 Hz	0.900 to 1.100%	
	1 kHz	0.900 to 1.100%	
	B. 1 kHz fundamental		
	2 kHz	0.900 to 1.100%	
	3 kHz	0.900 to 1.100%	
	4 kHz	0.900 to 1.100%	
	10 kHz	0.900 to 1.100%	

Scan by Zenith

STEP #	CHECK	ALLOWABLE LIMITS	ACTUAL VALUE
8.	**Total Harmonic Distortion Accuracy (cont)**		
	C. 20 kHz fundamental		
	40 kHz	0.900 to 1.100%	
	60 kHz	0.900 to 1.100%	
	80 kHz	0.900 to 1.100%	
	100 kHz	0.900 to 1.100%	
	D. 10 Hz fundamental		
	20 Hz	0.800 to 1.200%	
	100 Hz	0.800 to 1.200%	
	E. 100 kHz fundamental		
	200 kHz	0.800 to 1.200%	
	300 kHz	0.800 to 1.200%	
9.	**SMPTE/DIN IM Distortion**		
	Accuracy	0.900 to 1.100%	
10.	**CCIF IM Distortion**		
	Accuracy	0.900 to 1.100%	
11.	**Residual THD+N** (with SG 5010)		**−Input Grounded** **+Input Grounded**
	10 Hz	≤0.010%	
	20 Hz	≤0.0032%	
	1 kHz	≤0.0032%	
	20 kHz	≤0.0032%	
	50 kHz	≤0.010%	
	100 kHz	≤0.010%	
12.	**Residual SMPTE/DIN IMD** (with SG5010)		
	A. 4 to 1 Ratio		
	−Input Grounded	≤0.0032%	
	+Input Grounded	≤0.0032%	
	B. 1 to 1 Ratio		
	−Input Grounded	≤0.0032%	
	+Input Grounded	≤0.0032%	
13.	**Residual CCIF IMD** (with SG5010)		
	−Input Grounded	≤0.0018%	
	+Input Grounded	≤0.0018%	

Scan by Zenith

STEP #	CHECK	ALLOWABLE LIMITS	ACTUAL VALUE
14.	**Q-PK Response (Opt 02 only)**		
	Single cycle 200 Hz tone burst with 10 Hz repetition rate relative response	−2.7 to −1.9 dB	
15.	**Input Monitor**		
	Amplitude	0.90 to 1.10 V	
	Output Impedance	950 to 1050 Ω	
16.	**Function Output**		
	Accuracy	0.97 to 1.03 V	
	Output Impedance	950 to 1050 Ω	
17.	**Auxiliary Input**		
	Accuracy	0.97 to 1.03 V	
	Input Impedance	95 to 105 kΩ	

PROCEDURE

1. Check Input Impedance

AA 5001 Control Settings

FUNCTION	Level-Volts
INPUT RANGE	200 mV
FILTERS	None
RESPONSE	RMS

a. Connect the ac voltage calibrator to the input terminals of the AA 5001. Also connect a patch cord from the low or grounded side of the banana plug adapter to the ground terminal of the AA 5001 so that it grounds out the −Input. Refer to Fig. 5-1.

b. Set the ac calibrator for an output frequency of 400 Hz and an amplitude of 110 mV. Adjust calibrator amplitude until the AA 5001 display reads exactly 110.0 mV.

c. Insert the 1MΩ/20 pF Normalizer in series with the BNC to banana plug adapter and set the ac calibrator range for an output amplitude equal to 10 times the amount as determined in part b.

d. CHECK—That the AA 5001 display readout is 98.0 to 102.0 mV, corresponding to an Input impedance of 98.0 to 102.0 kΩ.

e. Reverse the banana plug connections to the AA 5001 so that the grounding connection shorts out the +Input.

f. CHECK—That the AA 5001 display readout is 98.0 to 102.0 mV corresponding to an input impedance of 98.0 to 102.0 kΩ.

2. Check Common Mode Rejection

a. Connect the ac calibrator to the input terminal of the AA 5001 as shown in Fig. 5-2.

b. Connect the digital multimeter to the AA 5001 Function Output and adjust it to measure AC volts.

c. Set the ac calibrator for an output frequency of 50 Hz (or 60 Hz) and an amplitude of 50 mV.

d. Set the AA 5001 INPUT RANGE switch to 200 μV.

e. CHECK—that the digital multimeter display readout is 1.580 volts or less.

NOTE

The internal gain from the AA 5001 INPUT to the FUNCTION OUTPUT is 80 dB (x 10,000) on the 200 μV range. With 50 mV of common mode signal, 50 dB rejection would correspond to an equivalent input signal of 158 μV. This is amplified by 80 dB to 1.58 V. Other input ranges decrease this gain in inverse proportion to their value.

Scan by Zenith

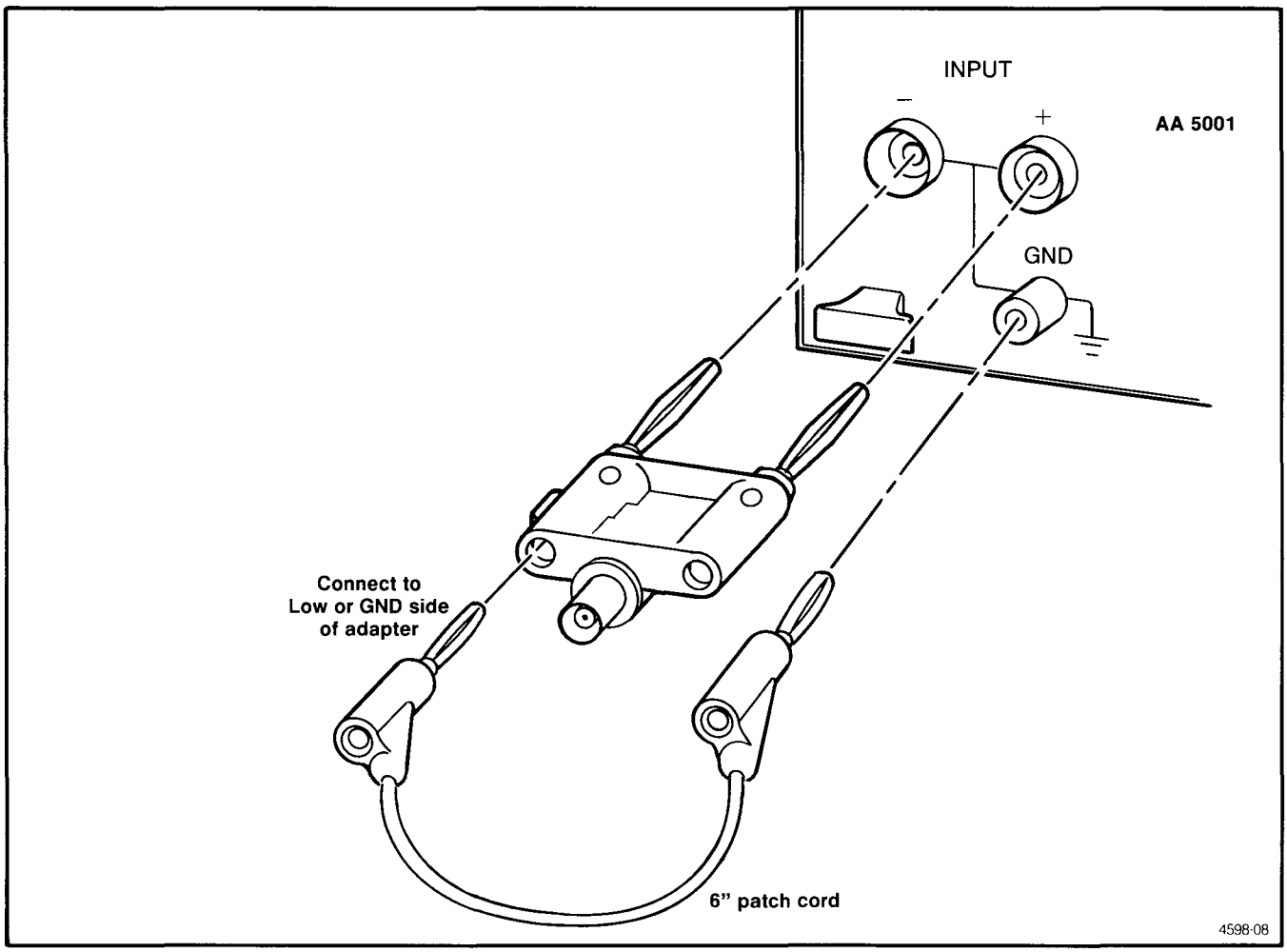

Fig. 5-1. AA 5001 grounded unbalanced input connection.

f. CHECK—that when using Table 5-2, the digital multimeter readings are acceptable for the listed input conditions.

3. Check Level Function Volts Accuracy

a. Connect an ac calibrator to the AA 5001 INPUT. Also connect a patch cord from the low side of the banana plug adapter to the ground terminal referring to Fig. 5-1 (same setup as in step 1).

b. Set the voltage output of the ac calibrator and the AA 5001 INPUT RANGE switch as shown in Table 5-2.

c. CHECK—that the displayed voltage readings are within the limits shown in the following table using 10 Hz, 20 Hz, 1 kHz, 20 kHz, and 100 kHz frequencies.

Table 5-2
Common Mode Rejection CHECK

AA 5001 Input Range	Input Common Mode Voltage	Maximum DVM Reading
200 μV	50 mV	1.58 V
2 mV	50 mV	158 mV
20 mV	50 mV	15.8 mV
200 mV	0.1 V	3.2 mV
600 mV	0.3 V	1.0 mV
2 V	1 V	3.2 V
6 V	3 V	1.0 mV
20 V	10 V	3.2 mV
60 V	30 V	1.0 mV
200 V	100 V	3.2 mV

Scan by Zenith

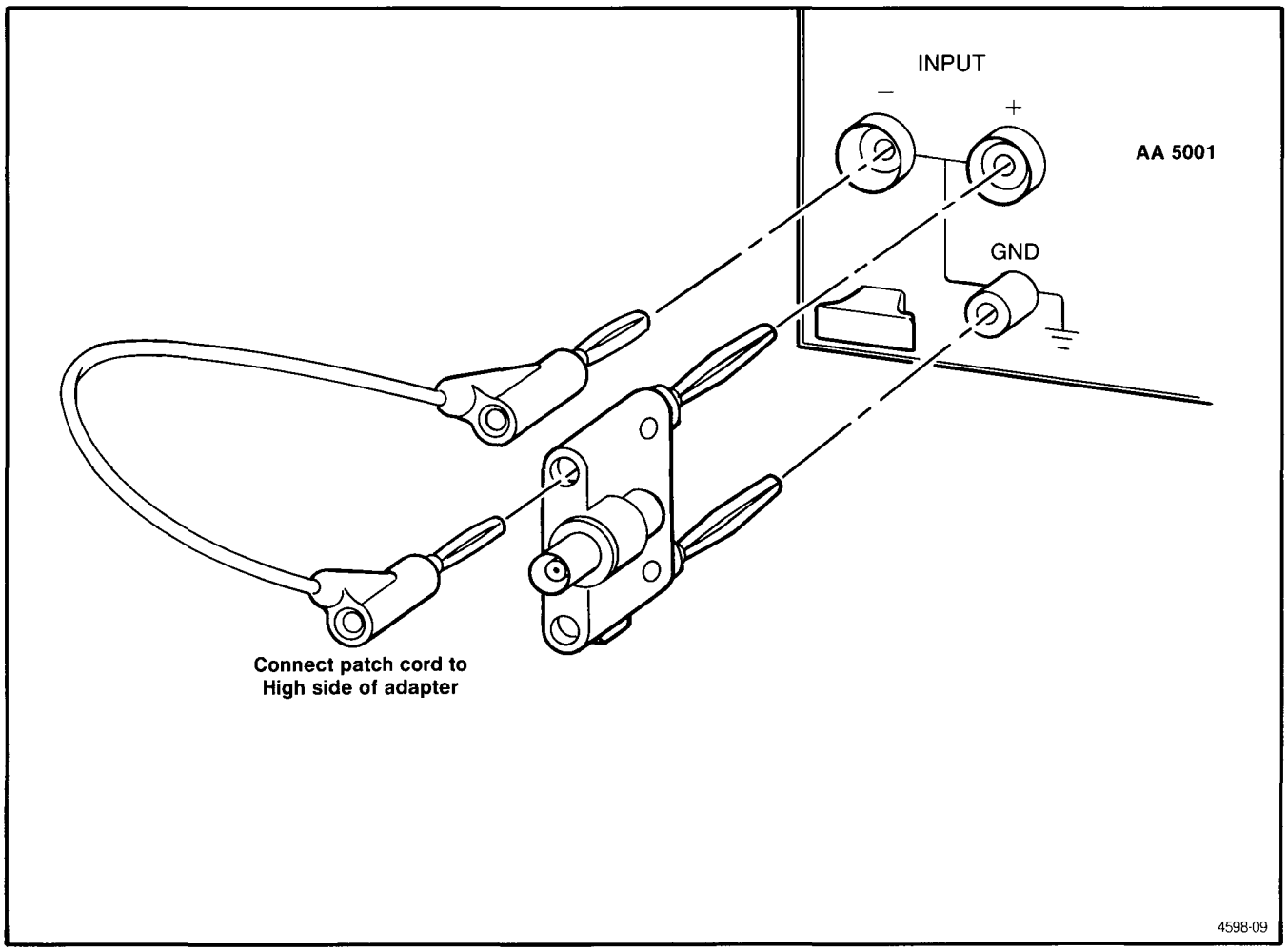

Fig. 5-2. AA 5001 common mode input connection.

NOTE

The operational range and/or specified accuracy of most commercially available ac calibrators is not adequate to directly check the AA 5001 performance at 100 μV. If desired, an accurate 100 μV signal may be obtained by connecting a 1 kΩ 0.1% resistor shunting the AA 5001 INPUT and a 100 kΩ, 0.1% resistor in series with the ac calibrator set for 10.20 mV. The resistor divider ratio (including AA 5001 input impedance effects) will be 102 to 1 causing the required 100 μV at the input terminals.

d. Maintain test setup for next check.

4. Check dBm Accuracy and Flatness

a. Connect an ac calibrator to the AA 5001 as shown in step 3 (referring to Fig. 5-1).

b. Set the ac calibrator output frequency to 1 kHz with an amplitude of 0.7746 V.

c. Change the AA 5001 INPUT RANGE switch to AUTO RANGE and the LEVEL FUNCTION to dBm 600 Ω.

d. CHECK—that the dBm reading is −0.2 to +0.2.

e. Set the ac calibrator for an output frequency of 1 kHz and any valid voltage ⩾100 μV and 1 kHz. Calculate the dBm equivalent of this voltage using the formula:

$$\text{dBm} = 20 \times \log_{10} \frac{\text{Input V}}{0.7746}$$

For example 24.50 mV would correspond to −30.0 dBm.

Scan by Zenith

f. Select the dBm 600 Ω display mode.

g. CHECK—that the dBm reading is within ±(0.2 dB +0.5% x Reading) of the calculated result in part 4e.

Using the same example of 24.50 mV corresponding to −30.0 dBm, the tolerance would be ±(0.3 + 0.06) = ±0.3 dB rounded off the the nearest 0.1 dB of displayed resolution.

h. Select dB RATIO display mode and PUSH TO SET 0dB REFerence set button.

i. CHECK—that the dB reading is −0.1 to +0.1 at 20 Hz and 20 kHz, and −0.3 to +0.3 at 10 Hz and 100 kHz frequency settings of the ac calibrator.

j. Set the ac calibrator to 100.0 V and 1 kHz and PUSH TO SET 0 dB REFerence set button.

k. Set the ac calibrator to 1.000 mV.

l. CHECK—that the dB reading is −99.3 to −100.7.

5. Check Bandwidth

a. Connect function generator to AA 5001 input using a 50 Ω terminator and BNC-to-dual banana plug adapter. Also connect the digital counter to the AA 5001 Input Monitor or the function generator, if desired, and adjust for a stable frequency readout.

b. Set function generator output to 1 kHz and any convenient amplitude, such as 1 V.

c. Select the dB RATIO display mode and PUSH TO SET 0 dB REFerence set button.

d. Increase the frequency of the function generator until the display readout indicates −3.0 dB.

e. CHECK—that the digital counter frequency readout indicates ⩾300 kHz.

6. Check Filters Response Accuracy

a. Connect the sinewave oscillator to the AA 5001 INPUT.

b. Set the oscillator frequency to 1 KHz and any convenient amplitude, such as 1 V.

c. Select dB RATIO display mode and PUSH TO SET 0 dB REFerence set button.

d. Press the 400 Hz HI PASS filter button.

Table 5-3
Level Function Volts Accuracy

AA 5001 Input Range	Calibrator Setting	Reading Limits	
		20 kHz – 20 kHz	10 Hz – 100 kHz
200 μV	100.0 μV	97.9 to 102.1	95.8 to 104.2
2 mV	1.800 mV	1.763 to 1.837	1.727 to 1.873
20 mV	18 mV	17.63 to 18.37	17.27 to 18.73
200 mV	180 mV	176.3 to 183.7	172.7 to 187.3
600 mV	500 mv	489 to 511	479 to 521
2 V	1.800 V	1.763 to 1.837	1.727 to 1.873
6 V	5.00 V	4.89 to 5.11	4.79 to 5.21
20 V	18.00 V	17.63 to 18.37	17.27 to 18.73
60 V	50.0 V	48.9 to 51.1	47.9 to 52.1
200 V	180.0 V	176.3 to 183.7	172.7 to 187.3

Scan by Zenith

e. Decrease the frequency of the sinewave oscillator until the display readout indicates −3.0 dB.

f. CHECK—that the counter readout indicates between 380 Hz and 420 Hz.

g. Decrease the frequency of the generator to 60 Hz.

h. CHECK—that the AA 5001 display readout indicates 40 dB or more attenuation.

i. Release the 400 Hz HI PASS filter and select the 80 kHz LO PASS filter.

j. Increase the frequency of the oscillator until the display readout indicates −3.0 dB.

k. CHECK—that the counter reads 76 kHz to 84 kHz.

l. Release the 80 kHz LO PASS filter and select the AUDIO BAND PASS filter.

m. Decrease the frequency of the oscillator until the display readout indicates −3.0 dB at the upper cutoff frequency.

n. CHECK—that the counter reads 21.28 kHz to 23.52 kHz.

o. Decrease the frequency of the oscillator until the display readout indicates −3.0 dB at the lower cutoff frequency.

p. CHECK—that the counter display readout is 21.28 Hz to 23.52 Hz.

NOTE

Follow steps 6q through 6w for standard instruments only. Perform steps 6x and following for Option 02 instruments only. Steps 6q through 6w spot check the response of the A weighting filter. For more information, refer to ANSI S 1.4 1971 (revised 1976) or IEC Recommendation 179 for type 1 sound level meters.

q. Release the AUDIO BANDPASS filter and select the A WTG filter.

r. Set frequency of the oscillator to 100 Hz.

s. CHECK—that the AA 5001 display readout indicates −20.1 dB to −18.1 dB.

t. Set oscillator frequency to 1 kHz.

u. CHECK—that the AA 5001 display readout indicates −1.0 dB to +1.0 dB.

v. Set oscillator frequency to 10 kHz.

w. CHECK—that the AA 5001 display readout indicates −6.5 dB to −0.5 dB.

NOTE

The following steps spot check the response of the CCIR WTG filter (Option 02 instruments only). For more information, refer to CCIR Recommendation 468-2 or DIN 45405. The CCIR weighting characteristic exhibits a very sharp rolloff at high frequencies. Exercise care to avoid small errors in setting frequency that can translate to significant amplitude (response) errors.

x. Release all previously selected filters and select the CCIR WTG filter to check the Option 02 instruments.

y. Set the oscillator output frequency to 1.0 kHz and the output amplitude to approximately 0.8 V.

z. Select dB RATIO mode and PUSH TO SET 0 dB REFerence set button.

aa. Increase oscillator output frequency to 6.30 kHz and readjust the output amplitude to obtain an AA 5001 display readout of exactly +12.2 dB. (CCIR response accuracy is referenced to +12.2 dB at 6.3 kHz.)

bb. Set the oscillator output frequency to 100 Hz.

cc. CHECK—that the AA 5001 display readout indicates −20.8 dB to −18.8 dB.

dd. Set the oscillator output frequency to 1.00 kHz.

Scan by Zenith

ee. CHECK—that the AA 5001 display readout indicates −0.5 dB to +0.5 dB.

ff. Set the oscillator output frequency to 10.0 kHz.

gg. CHECK—that the AA 5001 display readout indicates +7.3 dB to +8.9 dB.

hh. Set the oscillator output frequency to 20.0 kHz.

ii. CHECK—that the AA 5001 display readout indicates −24.2 dB to −20.2 dB.

NOTE

The following steps check the overall gain calibration of the CCIR WTG filter with both quasi-peak and rms detector responses. These gain calibrations are intentionally different with the 0 dB reference frequencies being 1.00 kHz and 2.00 kHz respectively.

jj. Release CCIR WTG filter (flat response) and select Q-PK response.

kk. Set the oscillator output frequency to 1.00 kHz and the amplitude to approximately 0.8 V.

ll. Select dB RATIO mode and PUSH TO SET 0 dB REFerence set button.

mm. Select CCIR WTG filter.

nn. CHECK—that the AA 5001 display readout indicates −0.2 dB to +0.2 dB.

oo. Release the CCIR WTG filter (flat response) and select RMS response.

pp. Set the oscillator output frequency to 2.00 kHz.

qq. PUSH TO SET 0 dB REFerence set button.

rr. Select CCIR WTG filter.

ss. CHECK—that the AA 5001 display readout indicates −0.3 dB to +0.3 dB.

7. Check Residual Noise

a. Disconnect all cables from the AA 5001. Connect a shorting bar across the + and − Input terminals.

b. Set the AA 5001 INPUT RANGE to 200 μV or the Auto Range position. Select VOLTS display, RMS RESPONSE and both 400 Hz HI PASS and 80 kHz LO PASS filters.

c. CHECK—that the display readout indicates ≤3.0 μV.

d. Release the 400 Hz HI PASS and 80 kHz LO PASS filters.

NOTE

For standard instruments perform steps 7e and 7f only. For Option 02 instruments, perform steps 7g and 7h only.

e. Select the A Wgt filter.

f. CHECK—that the display readout indicates ≤1.5 μV.

g. Select CCIR WTG filter and Q-PK response.

h. CHECK—that the display readout indicates ≤5.0 μV.

8. Check Total Harmonic Distortion Accuracy

a. Connect test equipment as shown in Fig. 5-3.

b. Select Input AUTO RANGE, LEVEL FUNCTION (VOLTS display mode), with no FILTERS.

c. Turn the oscillator output off.

d. Set the function generator output frequency to 7.00 kHz and adjust its output amplitude for an AA 5001 display readout of approximately 3.00 mV.

e. Turn on the oscillator output and set its frequency to 400 Hz and amplitude for an AA 5001 display readout of 300 mV (or exactly 100 times the value set in part 8d).

Scan by Zenith

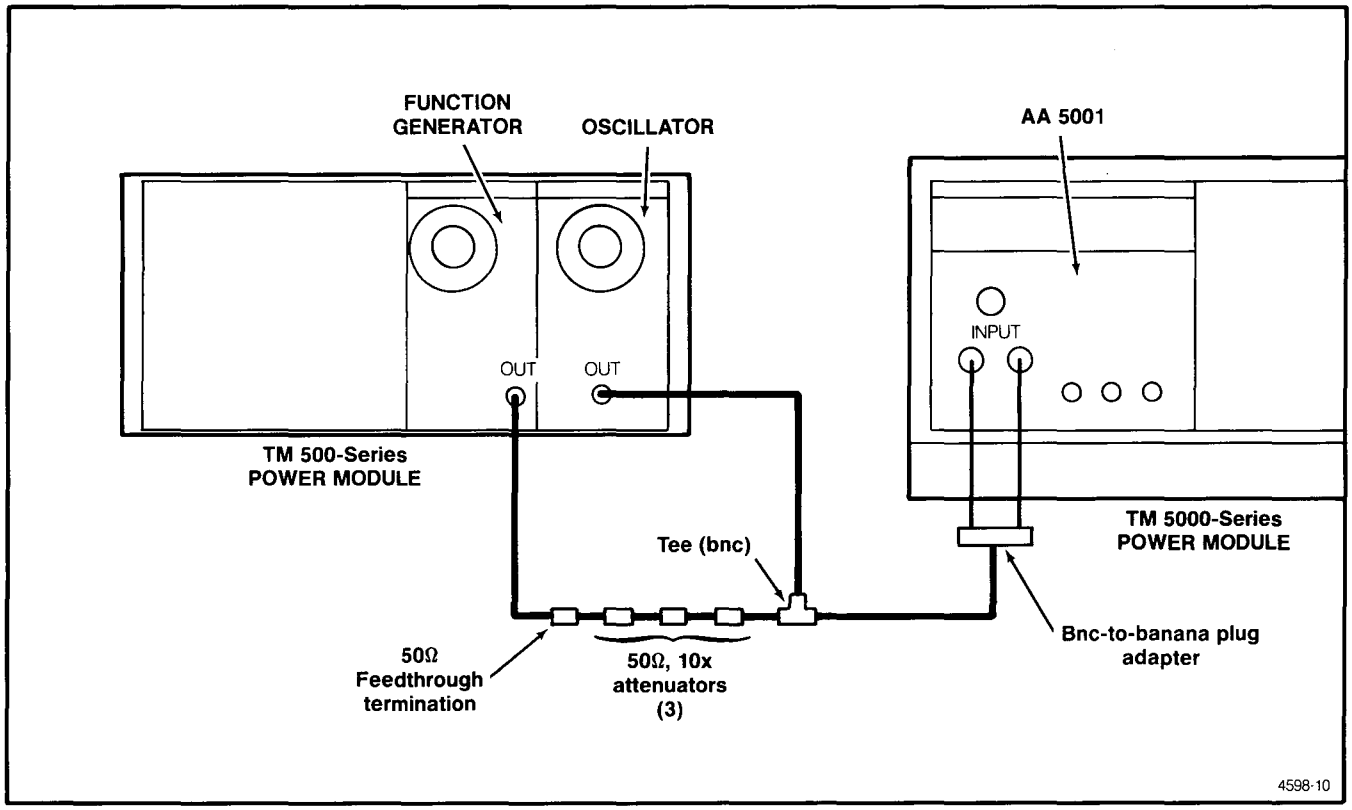

Fig. 5-3. AA 5001 check/adjust step.

NOTE

Do not disturb the oscillator or function generator output amplitudes for the remainder of this step. The resultant composite two tone signal comprises a calibrated 1.00% distortion source.

f. Select THD+N FUNCTION and AUTO RANGE.

g. CHECK—that the displayed distortion readout is within the limits at the various suggested frequency combinations as shown in Table 5-4.

NOTE

When checking measurement accuracy, carefully set the test frequency as close to an exact harmonic ratio with the fundamental frequency. Beat frequency related display jitter can occur if the test frequency is offset by 0.1 Hz to 5 Hz from an exact harmonic. This is caused by the AA 5001 automatic tuning operation and nulling control loops and the relatively fast response of the response detectors. A Lissajous waveform, formed by an X-Y display of the Input Monitor and Function Output signals may be helpful in setting the frequencies for exact harmonic ratios.

Table 5-4
Total Harmonic Distortion Accuracy CHECK

Fundamental (Oscillator)	Test Frequency (Function Generator)	Reading Limits
20 Hz	40 Hz 60 Hz 80 Hz 1 kHz	0.900% to 1.100%
1 kHz	2 kHz 3 kHz 4 kHz 10 kHz	
20 kHz	40 kHz 60 kHz 80 kHz 100 kHz	0.900% to 1.100%
10 Hz	20 Hz 100 Hz	0.800% to 1.200%
100 KHz	200 kHz 300 kHz	

Scan by Zenith

h. Maintain test setup for next check.

9. Check SMPTE/DIN IM Distortion Accuracy

a. Select Input AUTO RANGE LEVEL FUNCTION, VOLTS display mode, using no FILTERS.

b. Turn the oscillator output off.

c. Set the function generator output frequency to 7.00 kHz and adjust its output amplitude for an AA 5001 display readout of .800 mV.

d. Turn on the oscillator output, select the 60 Hz IM test signal, and set the output frequency to 7.20 kHz.

e. Select the 400 Hz HI PASS FILTER to reject the 60 Hz component of the IM test signal and adjust the oscillator output amplitude for an AA 5001 displayed readout of 80.0 mV.

f. Select the IMD FUNCTION and AUTO RANGE % mode, then release the 400 Hz HI PASS Filter.

g. CHECK—that the AA 5001 display readout indicates 0.900% to 1.100%.

h. Leave test equipment setup for next step.

10. Check CCIF IM Distortion Accuracy

a. Select the AA 5001 LEVEL (VOLTS and release any FILTERS previously selected (flat response).

b. Turn the oscillator output off.

c. Set the function generator output frequency to 250 Hz and adjust its output amplitude for an AA 5001 display readout of 3.00 mV.

NOTE

CCIF distortion is referenced to the level of either component of two equal amplitude test tones. This procedure simplifies test instrumentation requirements by omitting one of the two test tones. Subsequently, the averaging response of the automatic set-level circuitry of the AA 5001 will cause readings to be high by a factor of exactly ($4/\pi$) or 1.273. To compensate for this effect, the 250 Hz test tone amplitude is increased proportionately from 300 mV to 382 mV.

d. Turn on the oscillator output and set its frequency to 14 kHz and amplitude for an AA 5001 display readout of 382 mV.

e. Select IMD FUNCTION.

f. CHECK—that the AA 5001 display readout indicates 0.900% to 1.100%.

11. Check Residual THD+N (System Specification using the SG 5010 Programmable Oscillator)

NOTE

The SG 505 oscillator may be substituted for the SG 5010 for this step.

a. Connect the programmable oscillator output to AA 5001 Input with the grounded connection to the −Input (refer to Fig. 5-1) and perform the following settings:

SG 5010 Control Settings

Function	SINE
Vrms	any setting ⩾250 mV, e.g., 3.00 V
UNBAL-BAL	UNBAL
GND-FLTG	FLTG
ON-OFF	ON

AA 5001 Control Settings

INPUT RANGE	AUTO
FUNCTION	THD+N
%	Auto Range

b. CHECK—that the AA 5001 displayed readout does not exceed the limits as shown in the following table for the frequencies specified and for the AA 5001 filter used.

Scan by Zenith

SG 5010 Freq.	AA 5001 Filter	AA 5001 THD+N Reading Limit
10 Hz	None	0.010%
20 Hz	80 kHz	0.0032%
1 kHz	80 kHz	0.0032%
20 kHz	80 kHz	0.0032%
50 kHz	None	0.010%
100 kHz	None	0.010%

c. Reverse the polarity connection to the AA 5001 Input so that the grounding connection shorts out the +Input.

d. CHECK—(repeat step 11b).

e. Maintain test setup for next check.

12. Check Residual SMPTE/DIN IMD (System Specification using the SG 5010 Programmable Oscillator)

NOTE

Two SG 505 oscillators passively summed together may be substituted for the SG 5010, if desired. Make certain both outputs are floating to prevent the possibility of a ground loop.

a. Change the SG 5010 Function to SMPTE/DIN and select 7 kHz (or 8 kHz) Frequency and 60 Hz (or 250 Hz) IM Frequency. Make certain the output configuration is unbalanced and floating.

b. Change the AA 5001 Function to IMD and turn off any selected filters.

c. CHECK—that the AA 5001 display readout does not exceed 0.0032%.

d. Reverse the polarity of the connection to the AA 5001 Input, so that the grounding connection shorts out the other input.

e. CHECK—that the AA 5001 display readout does not exceed 0.0032%.

f. Press the SG 5010 Recall button and SMPTE/DIN button to select the special function 1:1 ratio test signal.

g. CHECK—that the AA 5001 display readout does not exceed 0.0032%.

h. Reverse the polarity of the connection to the AA 5001 Input.

i. CHECK—that the AA 5001 display readout does not exceed 0.0032%.

j. Maintain the test setup for the next check.

13. Check Residual CCIF IMD (System Specification using the SG 5010 Programmable Oscillator)

NOTE

Two SG 505 oscillators passively summed together may be substituted for the SG 5010, if desired. Make certain both outputs are floating to prevent the possibility of a ground loop.

a. Change the SG 5010 Function to CCIF and select 14.5 kHz Frequency and 500 Hz IM Frequency (14 kHz and 15 kHz equal amplitude twin tones if using two SG 505 oscillators).

b. CHECK—that the AA 5001 display readout does not exceed 0.0018%.

c. Reverse the polarity of the connection to the AA 5001 Input.

d. CHECK—AA 5001 reading does not exceed 0.0018%.

14. Check Q-PK Response Dynamic Characteristic (Option 02 only)

NOTE

The following procedure is optional and spot checks the peak hold dynamic characteristic of the Q-PK detector circuitry. It verifies proper operation and is

Scan by Zenith

provided in lieu of the complex and lengthy procedures defined in CCIR Recommendation 468-2 or DIN 45405. This procedure checks the relative response of the Q-PK detector to a single cycle 200 Hz tone burst with a 10 Hz repetition rate. If desired, the SG 5010 Programmable Oscillator may be substituted for the suggested triggerable function generator and SG 505 using ON cycles = 1 and OFF cycles = 19 to obtain the required tone burst.

a. Select the AA 5001 2 V INPUT RANGE, LEVEL FUNCTION (volts mode) and Q-PK Response. Make certain all FILTERS are off.

b. Connect the output of the triggerable function generator to the input of the AA 5001. Connect the output of the SG 505 oscillator to the trigger input of the function generator.

c. Set the output of the function generator for a 200 Hz sinewave in its free run mode.

d. Adjust the function generator output amplitude for an AA 5001 display readout of approximately 1.60 V.

e. Select dB RATIO mode and PUSH TO SET 0 dB REFerence button. Note the display readout indicates 0.0 dB.

f. Set the output frequency of the SG 505 to 10 Hz with maximum output amplitude (approximately 6 V rms).

g. Change the function generator to triggered mode and make certain the phase control setting is near 0°. (The output signal should now be a single cycle 200 Hz burst starting at 0° phase with a 10 Hz repetition rate.)

h. CHECK—that the AA 5001 display readout is −2.7 dB to −1.9 dB.

15. Check Input Monitor

a. Connect the SG 505 oscillator to the AA 5001 INPUT and the digital multimeter to INPUT MONITOR.

b. Set the SG 505 output frequency to 1.00 kHz and approximately 1 V rms.

c. Select the 2 V INPUT RANGE and LEVEL FUNCTION.

d. Set the digital multimeter to measure AC volts.

e. CHECK—that the digital multimeter display readout is 0.90 to 1.10 V rms.

f. Turn the SG 505 oscillator output off.

g. Set the digital multimeter to measure Ω.

h. CHECK—that the digital multimeter display readout is 950 to 1050 Ω.

NOTE

A slight dc offset may be present at the Input Monitor and will affect an ohm reading. To prevent measurement error, take the average of two readings reversing the digital multimeter connections between readings.

16. Check Function Output

a. Adjust the test setup so that the digital multimeter is connected to the FUNCTION OUTPUT.

b. Set the digital multimeter to measure AC volts.

c. Turn on the SG 505 oscillator output and adjust its amplitude for an AA 5001 display readout of 0.998 V to 1.002 V.

d. CHECK—that the digital multimeter display readout is 0.97 to 1.03 V.

e. Turn the SG 505 oscillator output off.

f. Set the digital multimeter to measure Ω.

g. CHECK—that the digital multimeter display readout is 950 to 1050 Ω.

NOTE

A slight dc offset may be present at the FUNCTION OUTPUT and will affect an ohm reading. To prevent measurement error, take the average of two readings reversing the digital multimeter connections between readings.

Scan by Zenith

17. Check Auxiliary Input

a. Connect an ac calibrator to the AA 5001 AUXILIARY INPUT. Set the calibrator output frequency to 400 Hz and 1.000 V amplitude.

b. Select 2 V INPUT RANGE, LEVEL FUNCTION (VOLTS mode), and Auxiliary FILTER (Input).

c. CHECK—that the AA 5001 display readout is 0.970 to 1.030.

d. Adjust calibrator amplitude until the AA 5001 display readout indicates exactly 1.100 V.

e. Insert the 1 MΩ/20 pF Normalizer in series with the Auxiliary Input.

f. CHECK—that the AA 5001 display readout is 0.095 to 0.105 V, corresponding to an input impedance of 95 to 105 kΩ.

18. Check the GPIB Bus through Controller

Refer to the Talker/Listener sample programs in the Programming section of this manual.

a. Connect the controller to the TM 5000-Series power module.

b. RUN the sample program for your selected controller using settings and queries commands.

c. CHECK—the controller display for AA 5001 returned query data.

This completes the Performance Check.

Scan by Zenith

ADJUSTMENT PROCEDURE

Introduction

This procedure need not be performed unless the instrument fails to meet the performance requirements of the electrical characteristics listed in the Specification section of this manual. To ensure instrument accuracy, perform the adjustment of the instrument every 2000 hours of operation or every 12 months if used infrequently. Adjustment may be required after a repair has been made. If adjustment of internal controls does not bring the instrument performance within the limits listed in the Specification section, troubleshooting is indicated. Adjustments should be made with the instrument operating at an ambient temperature of +20°C to +30°C.

Test Equipment Required

Test equipment used for adjustment of the AA 5001 is listed at the beginning of the Performance Check section of this manual.

Preparation

To gain access to the test points and adjustable components, remove the instrument side covers (refer to the Maintenance section for instructions). Some adjustments are accessible through the top and bottom covers. See Fig. 5-4.

Connect the AA 5001 to the power module via the extender cable. Connect the test equipment and the power module to a suitable line voltage source.

Turn on the power module and test equipment; allow at least 30 minutes warm-up time for the AA 5001.

Fig. 5-4. AA 5001 top cover adjustments access.

PROCEDURE

1. + 5.25 V (R3047) ADJUST

a. Connect a test cable from the digital voltmeter with the positive lead to the +5.25 V test point (TP 3041) and the negative lead connected to ground (TP 3044).

b. ADJUST—R3047, located on the Main board, for a digital readout of 5.25 V, ±0.1 V.

c. Remove all cable connections.

2. Distortion Amp Offset (R1050) ADJUST

AA 5001 Settings

FUNCTION	THD+N
AUTO RANGE	0.2%
FILTERS	80 kHz LO PASS
INPUT RANGE	2 V

a. Short the AA 5001 INPUT terminals using the dual banana shorting bar.

Scan by Zenith

b. Connect a test cable from the oscilloscope vertical plug-in to the AA 5001 FUNCTION OUTPUT connector.

c. Set the oscilloscope system for 200 mV/div, dc coupling (vertical) and 200 ms/div (horizontal). Adust timebase for auto trigger and position the displayed baseline near center screen.

d. Press the AA 5001 AUTO RANGE 2% button and note the jump and recovery of the displayed waveform baseline.

e. ADJUST—R1050, accessible through a hole in the top cover (see Fig. 5-4) and located on the Input/Notch Filter board, while alternately pressing the 0.2% and 2% AUTO RANGE buttons for a jump amplitude of less than 100 mV.

f. Remove all connections.

3. Rms Zero (R1030), Avg Zero (R1035) or Q-PK Zero (R4037) ADJUSTS

a. Press the AA 5001 FUNCTION LEVEL and VOLTS buttons.

b. Connect a test cable from the calibrator output to the AA 5001 INPUT terminals. Set the AC Calibrator for a 15.00 mV, 1 kHz (sinewave) output.

c. Press the AA 5001 RESPONSE button (RMS position).

d. ADJUST—R1030, located on the Main board, for a display readout of .014; then slowly adjust R1030 until .015 reading is attained.

e. Press the FUNCTION dBm 600 Ω button, and note the display readout.

f. Release the RESPONSE button.

g. ADJUST—R1035 in standard instruments, or R4037 in Option 02 instruments (located on the Main board), for the same reading as noted in step 3e.

h. Maintain same test setup.

4. Rms Cal (R2064), Avg Cal (R1040) or Q-PK Cal (R4055) ADJUSTS

a. Change the AA 5001 FUNCTION to LEVEL and VOLTS, and make certain the INPUT RANGE switch is set to 2 V.

b. Press the RESPONSE button (RMS position).

c. Set the AC Calibrator for a 1.500 V rms output.

d. ADJUST—R2064, located on the GPIB board, for a display readout of 1.500, ±0.001.

e. Release the RESPONSE button.

f. ADJUST—R1040 in standard instruments, or R4055 in Option 02 intruments (located on the Main board), for a display readout of 1.500, ±0.001.

g. Maintain same test setup.

5. Attn Comp (C2061) ADJUST

a. Make certain the FUNCTION LEVEL, VOLTS, and RESPONSE (RMS position) buttons are pressed and all FILTER buttons are out (off).

b. Make certain the INPUT RANGE switch is set to 2 V.

c. Set the AC Calibrator for a 1.00 V, 60 kHz (sinewave) output.

d. Note the display readout.

e. Change the INPUT RANGE switch to 20 V.

f. Change the AC Calibrator to 10.00 V (60 kHz).

g. ADJUST—C2061, accessible through hole in the top cover (see Fig. 5-4) and located on the Input/Notch Filter board, (using an insulated low capacitance screwdriver) for a display readout equal to exactly ten times the reading noted in step 5d.

h. Maintain same test setup.

Scan by Zenith

6. 0 dB (R8101), −20 dB (R2161), and −40 dB (R8091) ADJUSTS

a. Make certain the FUNCTION LEVEL button is pressed.

b. Press the FUNCTION dBm 600 Ω button.

c. Change the INPUT RANGE switch to 2 V.

d. Press the RESPONSE (RMS position) button.

e. Change the AC Calibrator for a 0.7746 V rms, 1 kHz output.

f. ADJUST—R8101, located on the Logic board, for a display readout of exactly 00.0.

g. Reduce the calibrator amplitude to 77.46 mV rms.

h. ADJUST—R2161, accessible through a hole in the top cover (see Fig. 5-4) and located on the Logic board, for a display readout of exactly −20.0.

i. Reduce the calibrator amplitude to 7.746 mV rms.

j. ADJUST—R8091, located on the Logic board, for a display readout of −40.0, ±0.2.

k. INTERACTION—Repeat steps 6e through 6j, until the display readouts are correct.

l. Maintain same test setup.

7. Offset Gain (R8111) ADJUST

a. Change the INPUT RANGE switch to 20 mV.

b. Change the calibrator output signal to 7.746 mV rms.

c. ADJUST—R8111, located on the Logic board, for a display readout of exactly −40.0.

d. Maintain same test setup.

8. dBr Zero (R8153) ADJUST

a. Press the AA 5001 FUNCTION dB Ratio button and change the Input Range switch to 2 V.

b. Set the calibrator output for 0.7746 V rms at 1 kHz.

c. Press and release the PUSH TO SET 0 dB REF button.

d. ADJUST—R8153, located on the Logic board, if the display readout is not exactly 00.0. To correct for a − error, adjust (slightly) R8153 clockwise; for a + error correction, adjust counterclockwise.

e. Interaction—Repeat steps 8c and 8d until the display readout indicates 00.0.

f. Remove all connections.

9. Null (R1030), Freq Trim (R1023), and Ldr Balance (R5025) ADJUSTS

NOTE

In these steps, although unnecessary, a dual channel oscilloscope system may be used. Connect the channel 1 to the AA 5001 INPUT MONITOR, and the channel 2 to the FUNCTION OUTPUT (triggering on channel 1 signal). Channel 1 indicates the fundamental frequency. R1030 and R1023 are adjusted for minimum fundamental at the FUNCTION OUTPUT, while R5025 adjusts for minimum harmonics.

a. Change the INPUT RANGE switch to 2 V and press the THD+N, 0.2%, and AUDIO BAND PASS buttons.

b. Connect the SG 505 oscillator to the AA 5001 INPUT through a BNC to banana plug adapter as shown in Fig. 5-1. Make certain the SG 505 output is floating.

c. Set the SG 505 oscillator output frequency to 400 Hz at approximately 0 dBm (1.55 V rms) amplitude.

d. ADJUST—R1030, accessible through a hole in the top rail (see Fig. 5-4) and located on the Input/Notch Filter board, for the lowest display readout.

Scan by Zenith

e. ADJUST—R1023, accessible through the top cover hole (Input/Notch Filter board), for the lowest display readout.

f. INTERACTION—Repeat steps 9d and 9e to obtain the lowest display reading.

g. Change the oscillator frequency to 800 Hz.

h. ADJUST—R5025, accessible through hole in the bottom cover (Input/Notch Filter board), for the lowest display readout.

NOTE

If R5025 has no effect on the display readout, leave the adjustment in the center position. If U4011 or U5010 have been replaced, this adjustment should be performed or rechecked after 24 hours of operation.

i. Disconnect the oscillator.

10. Dist Cal (R4042) ADJUST

a. Change the INPUT RANGE switch to AUTO RANGE.

b. Press the FUNCTION LEVEL, VOLTS, RESPONSE and AUTO RANGE buttons. All other buttons are out (position).

c. Connect the test equipment as shown in Fig. 5-3.

d. Turn off the SG 505 oscillator output and make certain it is floating.

e. Adjust the function generator for an output frequency of 7 kHz and a AA 5001 display of approximately 3.00 mV.

f. Turn on the SG 505 oscillator output and set the frequency to 400 Hz. Adjust the output level to 300 mV or exactly 100 times the level set in part 10e (as displayed on the AA 5001) and press the THD+N button.

g. ADJUST—R1051, accessible through the top cover hole (see Fig. 5-4) located on the Input/Notch Filter board, for a display readout of 1.000%.

h. Maintain same test setup.

11. SMPTE Cal (R1011) ADJUST

a. Press the LEVEL button.

b. Turn off the SG 505 oscillator output.

c. Set the function generator output frequency to 7.00 kHz and adjust its output amplitude for an AA 5001 display of .800 mV.

d. Turn on the SG 505 oscillator output, select the 60 Hz IM test signal mode, and set the output frequency to 7.20 kHz.

e. Press the 400 Hz HI PASS FILTER button to reject the 60 Hz component of the IM test signal and adjust the oscillator output amplitude for an AA 5001 display of 80.0 mV.

f. Release the 400 Hz HI PASS Filter and press the IMD button.

g. ADJUST—R1011, accessible through the top cover hole (see Fig. 5-4) located on the IMD board, for a display readout of 1.000%.

h. Maintain the same test setup.

12. CCIF Cal (R1101) ADJUST

a. Press the AA 5001 LEVEL button and release any FILTERS previously selected.

b. Turn off the oscillator output.

c. Set the function generator output frequency to 250 Hz and adjust its output amplitude for an AA 5001 display readout of 3.00 mV.

NOTE

CCIF distortion is referenced to the level of either component of two equal amplitude test tones. This procedure simplifies test instrumentation requirements by omitting one of the two test tones. Subsequently, the averaging response of the automatic set-level circuitry of the AA 5001 will cause readings

Scan by Zenith

to be high by a factor of exactly (4÷π) or 1.273. To compensate for this effect, high frequency test tone amplitude is increased proportionally from 300 mV to 382 mV.

d. Turn on the SG 505 oscillator output and set its frequency to 14 kHz and amplitude for an AA 5001 display readout of 382 mV.

e. Press the IMD button.

f. ADJUST—R1101, accessible through the top cover (see Fig. 5-4) located on the IMD board, for a display readout of 1.000%.

g. Remove all connections.

13. CCIR Cal (Option 02 Instruments Only)

a. Connect SG 505 oscillator to AA 5001 INPUT.

b. Select Level Function, Volts, and Q-PK response. Make sure all FILTERS are off.

c. Adjust oscillator output frequency to 1.000 kHz ±1 Hz and amplitude for an AA 5001 display readout of approximately 1.000 V.

d. Press the CCIR WTG button.

e. ADJUST—R2035, CCIR Cal located on the main board, for a display readout equal to that observed in step 13c.

f. Disconnect all test equipment.

This completes the Adjustment Procedure.

Scan by Zenith

MAINTENANCE

Introduction

This section of the manual describes on-board jumpers and rear interface information and provides general maintenance and troubleshooting information.

CAUTION

To prevent damage to the AA 5001, turn off the power module before installing or removing the instrument. Do not use excessive force to install or remove.

Preparation For Use

On-board Jumpers

Refer to the Parts Location Grids located in the pull-out pages of this manual.

GPIB board:

J1010 — μCom (AA 5001/SG 5010 Serial Interface)—Used to enable or disable communication between the AA 5001 and SG 5010 during sweep mode.

J3020 — SA/NORM—Used to enable signature analysis routine internal to the AA 5001.

J3023 — RUN/FORCE Instruction Mode Test—Used to initiate forced instruction mode test.

IMD board:

J1053 — CCIF/AUTO/SMPTE—Used to set IMD mode. An internal jumper (J1053) has been provided to defeat the automatic IMD selection feature if desired. To change the jumper position, remove the top cover (see Circuit Board Removal). With the jumper positioned on the back two pins, the instrument is locked in the CCIF IMD mode. With the jumper positioned on the center two pins, the instrument automatically selects either CCIF or SMPTE/DIN modes as determined by the input signals. With the jumper positioned on the front two pins, the unit is locked in the SMPTE/DIN mode.

Scan by Zenith

REAR INTERFACE INFORMATION

FUNCTIONS AVAILABLE AT REAR CONNECTOR

Refer to Fig. 6-1 for the MAIN board assignments and Fig. 6-2 for the GPIB assignments.

Slots exist between pins 17 and 18 and 6 and 7 on the rear interface connector. The slot between pins 6 and 7 identifies the AA 5001 as a member of the TM 5000 family. Signal inputs, outputs, or other specialized connections may be made to the rear interface connectors as shown in the input output assignments illustration (Fig. 6-1). A description of these connections follows.

+ and − Input Connectors (28B, 28A)

These terminals are connected to the input of the AA 5001 when the REAR INTFC INPUT button on the front panel is pressed. The front panel INPUT connectors are disconnected in this mode. The characteristics of these terminals are identical with the front panel INPUT connectors except the maximum input voltage is limited to 42 V peak or 30 V rms. Due to the possibility of crosstalk at the rear interface, noise and distortion performance may be degraded.

Input Common (27B, 27A)

These are the common (ground) connections for the rear interface input.

Auxiliary Input (25B)

This terminal is connected in parallel with the front panel AUXILIARY INPUT connector. Maximum input voltage is 15 V and limited to 6 V peak for linear operation.

Auxiliary Input Ground (26B)

Use this connection as a ground return for the auxiliary input.

Function Output (23B)

This connector is in parallel with the front panel FUNCTION OUTPUT connector.

Function Output Ground (24B)

Use this connector for the return circuit for the function output.

Input Monitor (24A)

This terminal is in parallel with the front panel INPUT MONITOR connector.

Input Monitor Ground (23A)

Use this connector as the return circuit for the INPUT MONITOR.

Converter Output (20A)

This connector provides a dc output from the ac to dc converter. This level corresponds to the average or rms output as selected on the front panel. The output level is 1 V, ±5% for a 1000 count display. The source resistance is 500 Ω, ±5%.

dB Converter Output (19B)

This connector provides a dc output from the logarithmic dB converter. The output voltage is 10 mV, ±5 % for each 1 dB on the display. The source resistance is 1kΩ, ±5 %. Changes in input level range or distortion range will cause brief ac transients.

dB Converter Output Ground (20B)

Use this connector as the ground return for the dB converter output.

GENERAL MAINTENANCE INFORMATION

Troubleshooting Aids

Diagrams. Complete circuit diagrams are located in the pullout pages in the Diagrams and Circuit Board Illustrations Section of this manual. The portions of the circuit mounted on the circuit boards is enclosed by a solid line. The circuit number of each component in this instrument is shown on a diagram. See the first page of the Diagrams and Circuit Board Illustrations section for definitions of the symbols and reference designators used on the diagrams.

Circuit Board Illustrations. Circuit board illustrations are provided in conjunction with the circuit diagrams. Each board-mounted component shown on a diagram is also identified on the circuit board illustration by circuit number. A table is provided with each diagram, listing components by assembly and circuit number. The table also lists the component grid locations on both the associated diagram and the circuit board illustration.

Scan by Zenith

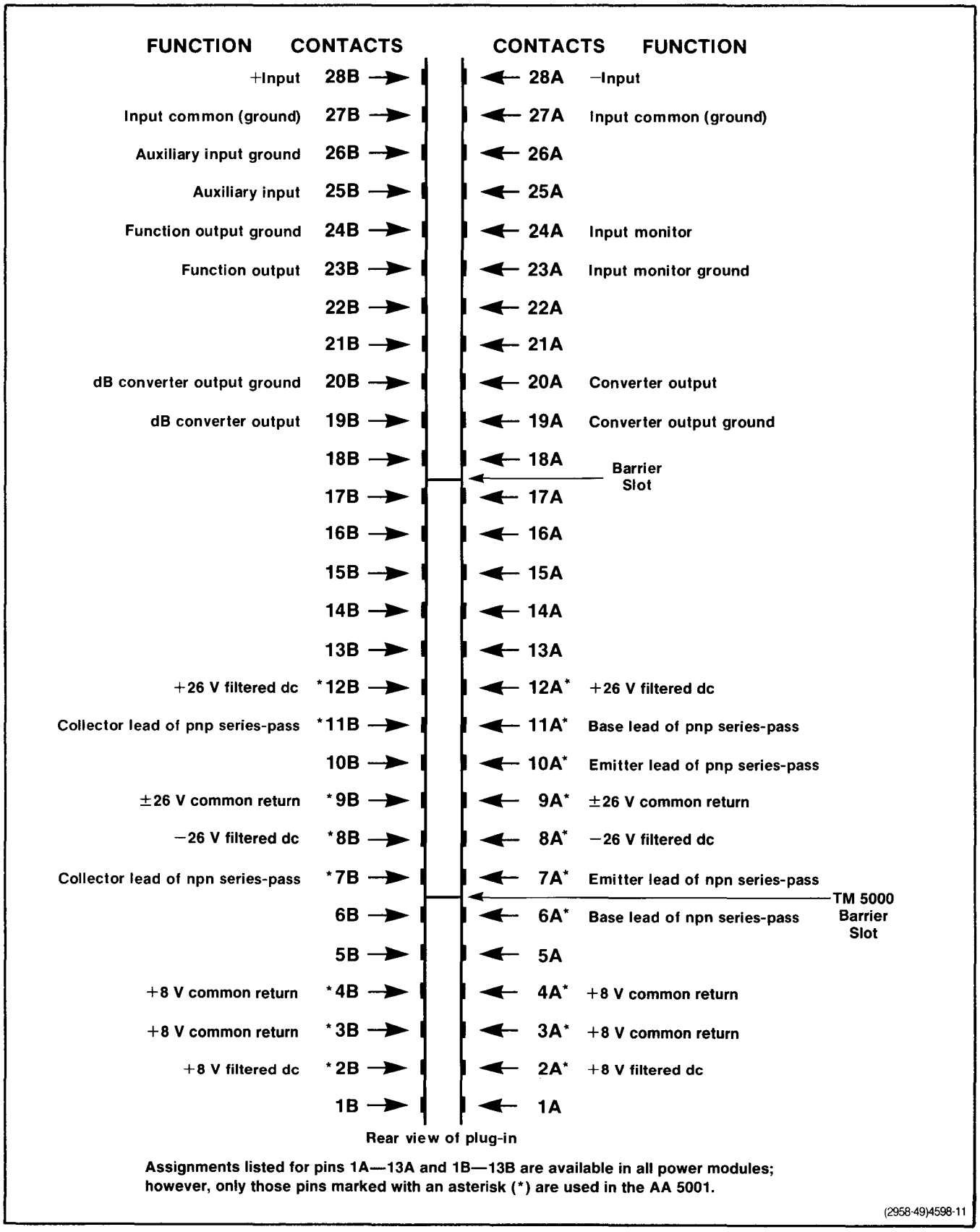

Fig. 6-1. Main board rear interface connector assignments.

Scan by Zenith

REAR INTERFACE GPIB CONNECTOR

GPIB BOARD (A14)

FUNCTION	PIN		PIN	FUNCTION
DIO1	1		2	DIO5
DIO2	3		4	DIO6
DIO3	5		6	DIO7
DIO4	7		8	DIO8
	9		10	
EOI	11		12	IFC
DAV	13		14	SRQ
NRFD	15		16	ATN
NDAC	17		18	REN
	19		20	

PLUG-IN REAR VIEW

Fig. 6-2. GPIB board rear interface connector assignments.

Calibration Fixtures

Several calibration fixtures are available from Tektronix, Inc. that are helpful in troubleshooting the AA 5001.

067-0645-02	Plug-in Extender
067-0996-00	GPIB Extender
067-1156-00	Extender Cable Kit

Contact your nearest Tektronix, Inc. Field Office or representative for ordering information.

Troubleshooting Equipment

Before using any test equipment to make measurements on static-sensitive components or assemblies, be certain that any voltage or current supplied by the test equipment does not exceed the limits of the component to be tested.

Static-Sensitive Components

CAUTION

Static discharge can damage any semiconductor component in this instrument.

This instrument contains electrical components that are susceptible to damage from static discharge. See Table 6-1 for relative susceptibility of various classes of semiconductors. Static voltages of 1 kV to 30 kV are common in unprotected environments.

Observe the following precautions to avoid damage:

1. Minimize handling of static-sensitive components.
2. Transport and store static-sensitive components or assemblies in their original containers, on a metal rail, or on conductive foam. Label any package that contains static-sensitive assemblies or components.
3. Discharge the static voltage from your body by wearing a wrist strap while handling these components. Servicing static-sensitive assemblies or components should be performed only at a static-free work station by qualified service personnel.
4. Nothing capable of generating or holding a static charge should be allowed on the work station surface.
5. Keep the component leads shorted together whenever possible.
6. Pick up components by the body, never by the leads.
7. Do not slide the components over any surface.

Scan by Zenith

8. Avoid handling components in areas that have a floor or work surface covering capable of generating a static charge.
9. Use a soldering iron that is connected to earth ground.
10. Use only special antistatic suction type or wick type desoldering tools.

Table 6-1
RELATIVE SUSCEPTIBILITY TO STATIC DISCHARGE DAMAGE

Semiconductor Classes	Relative Susceptibility Levels[a]
MOS or CMOS microcircuits or discretes, or linear microcircuits with MOS inputs. (Most Sensitive)	1
ECL	2
Schottky signal diodes	3
Schottky TTL	4
High-frequency bipolar transistors	5
JFETs	6
Linear microcircuits	7
Low-power Schottky TTL	8
TTL (Least Sensitive)	9

[a]Voltage equivalent for levels:

1 = 100 to 500 V 4 = 500 V 7 = 400 to 1000 V (est.)
2 = 200 to 500 V 5 = 400 to 600 V 8 = 900 V
3 = 250 V 6 = 600 to 800 V 9 = 1200 V

(Voltage discharged from a 100 pF capacitor through a resistance of 100 Ω.)

Obtaining Replacement Parts

Electrical and mechanical parts can be obtained through your local Tektronix Field Office or representative. However, it may be possible to obtain many of the standard electronic components from a local commercial source. Before purchasing or ordering a part from a source other than Tektronix, Inc., check the Replaceable Electrical Parts list for the proper value, rating, tolerance, and description.

NOTE

When selecting replacement parts, remember that the physical size and shape of a component may affect its performance in the instrument.

Some parts are manufactured or selected by Tektronix, Inc., to satisfy particular requirements or are manufactured for Tektronix, Inc., to our specifications. Most of the mechanical parts used in this instrument have been manufactured by Tektronix, Inc. To determine the manufacturer, refer to the Replaceable Parts list and the Cross Reference index, Mfr. Code Number to Manufacturer.

When ordering replacement parts from Tektronix, Inc., include the following information:

1. Instrument type and option number.
2. Instrument serial number.
3. A description of the part (if electrical, include complete circuit number).
4. Tektronix part number.

Circuit Board Removal

Refer to the following procedure and Fig. 6-3 for circuit board removal by qualified service personnel.

1. Top Cover Removal

a. Remove the two side covers (four 1/4 turn fasteners).

b. Remove the top cover screws (2).

c. Remove screws (2) attaching the back cover to top cover.

d. Carefully pull the top cover up to remove.

2. Bottom and Back Covers Removal

a. Remove top cover.

b. Remove shield ground screw (1) on bottom.

c. Remove the latch assembly using the following procedure. Refer to Fig. 6-4.

Use a small screwdriver to push forward slightly on the rear latch just in front of the spring. Press down on the latch knob to raise the latch knob extension at the point where the two latch pieces engage. While holding the latch knob down, push up on the front panel latch piece at the point of engagement to disengage the two pieces. Then, pull the latch knob out.

Scan by Zenith

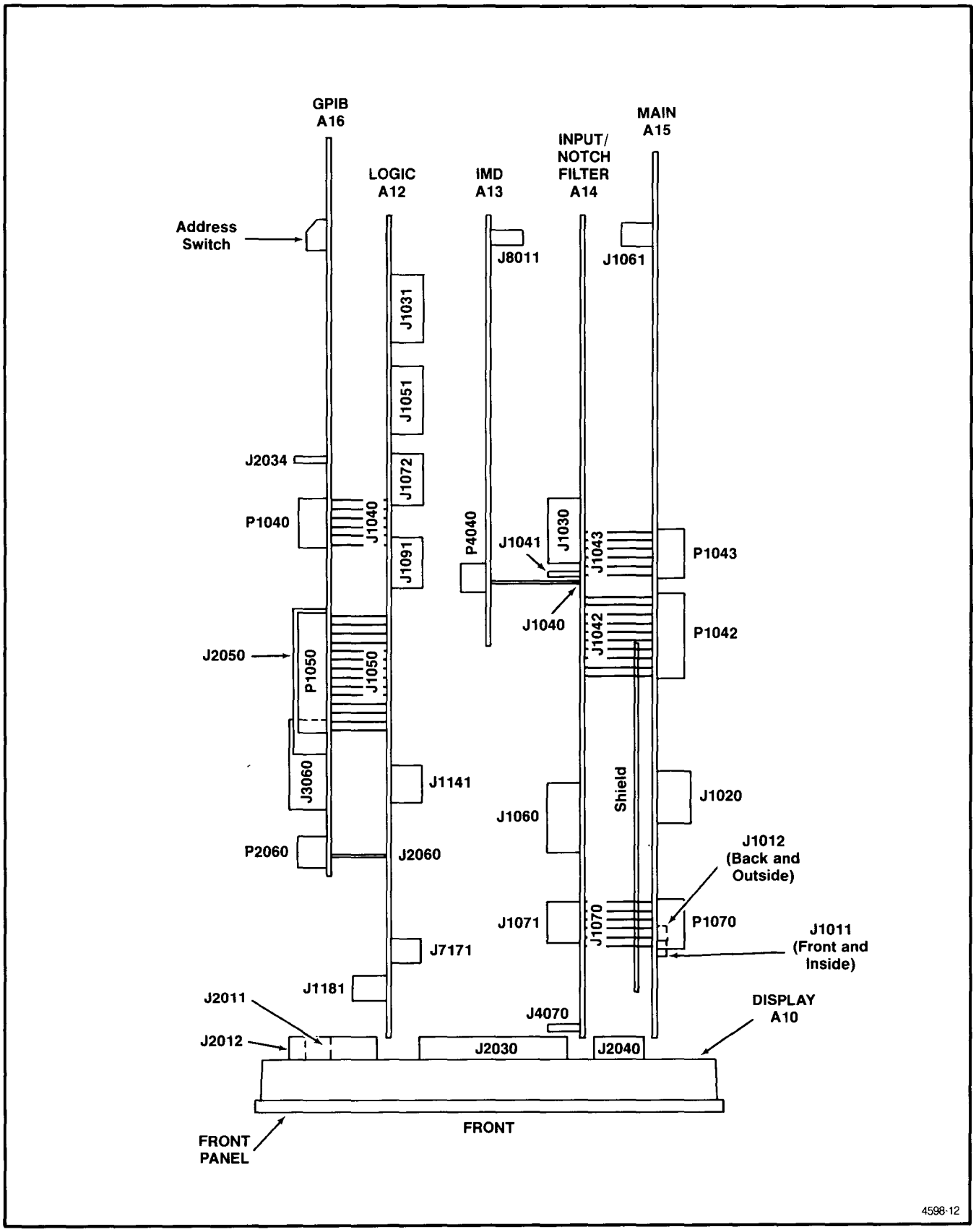

Fig. 6-3. Circuit boards and connectors pictorial (top view).

Scan by Zenith

CAUTION

Do not install the plug-in in the power module while the latch is disassembled. Removal of the plug-in without use of the latch can be extremely difficult.

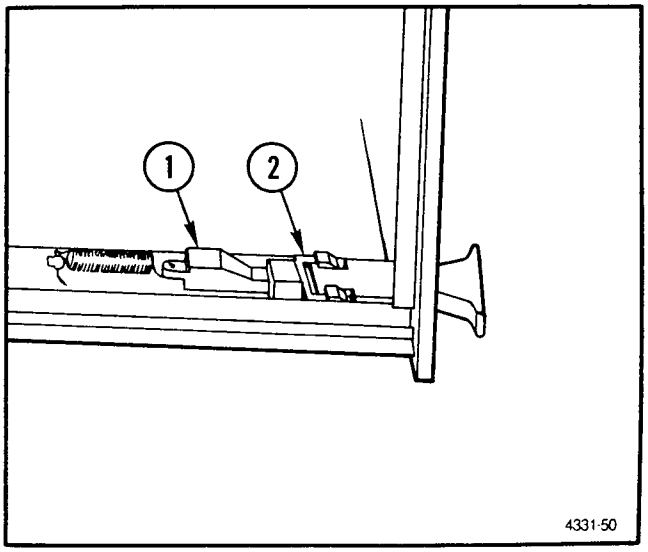

Fig. 6-4. Latch assembly pictorial.

d. Remove screws (2) attaching the bottom cover to front panel.

CAUTION

The spacers used on the front panel screws are necessary to prevent damage to the front panel. Make sure these spacers are in place when the screws are reinstalled.

e. Carefully pull the covers down and back to remove.

3. Main (A15), Input/Notch (A14), and IMD (A13) Boards Removal

a. Remove the top, bottom and back covers.

b. Remove the Cable Assembly from J1020 on the Main Board.

c. Position the AA 5001 bottom side up, and remove the cables from J7171 on the Logic Board and J4070 on the Input/Notch Board.

d. Remove the screws (2) that secure the Main Board to the Front panel.

e. Slide the boards back to disengage the pushbutton switches from the front panel and fold out the boards as an assembly.

NOTE

This position may be used for troubleshooting most of the AA 5001 with an input signal applied to J4070 on the Input/Notch Board. If further disassembly is required, continue this procedure.

f. Remove the screws (3) that secure the IMD Board, disconnect the cable from J8011 on the IMD Board and carefully pull up the board to separate.

g. Disconnect all cables attaching the board assembly to the rest of the instrument.

h. Remove the screws (2) and posts (2) on the Input/-Notch Board that secure the Input/Notch Board to the Main Board and carefully pull the boards apart.

j. Remove the shield from the Main Board by first removing the spacers (2) from the shield then the screws (3) that secure the shield to the Main Board.

NOTE

On reassembly, the shield should be secured to the Main Board by the screws (3) before the spacers (2) are added.

4. Control Logic (A12) and GPIB (A16) Boards Removal

a. Remove the top, bottom and back covers.

b. Carefully unsolder resistors (2) R530 and R540 from the Input connector solder lugs.

c. Remove the Input Range knob.

d. Disconnect all ribbon cables from the Control Logic and GPIB Boards.

e. Remove the screw (1) that secures the Control Logic Board to the Front Panel.

Scan by Zenith

f. Slide the boards back to disengage the pushbutton switches from the front panel.

g. Remove the screws (5) on the GPIB Board that secure the GPIB Board to the Control Logic Board and carefully pull the boards apart.

5. Display Board (A10) Removal

a. Remove the top, bottom and back covers.

b. Remove the Main (A15), Input/Notch (A14), and IMD (A13) Boards.

c. Remove the Control Logic (A12) and GPIB (A16) Boards.

d. Disconnect all ribbon cables from the Display Board.

e. Remove the screws (2) that secure the Display Board to the Front Panel.

f. Pull the Display Board away from the Front Panel.

Magnetic Shield

The shield attached to the rear plate of the AA 5001 is heat treated to enhance its magnetic shielding properties. The benefits of this treatment will be destroyed by mechanical stresses applied to this part. As such, care should be taken not to drop or mechanically deform or bend this shield during service operations. Also, this shield uses a single point ground (center mounting screw) to prevent ground loop currents that would decrease its effectiveness. Note that the top and bottom mounting screws use insulating washers.

Soldering Techniques

WARNING

To avoid electric-shock hazard, disconnect the instrument from the power source before soldering.

The reliability and accuracy of this instrument can be maintained only if proper soldering techniques are used when repairing or replacing parts. General soldering techniques which apply to maintenance of any precision electronic equipment should be used when working on this instrument. Use only 60/40 rosin-core, electronic grade solder. The choice of soldering iron is determined by the repair to be made.

CAUTION

Some of the circuit boards in the AA 5001 are of the multilayer type with conductive paths laminated between the top and bottom board layers. All soldering on these boards should be done with extreme care to prevent breaking the connections to these conductive paths. Only experienced maintenance personnel should attempt to repair these boards. Do not allow solder or solder flux to flow under printed curcuit board switches. The printed circuit board is part of the switch contacts; intermittent switch operation can occur if the contacts are contaminated.

When soldering on circuit boards or small wiring, use only a 15 watt, pencil type soldering iron. A higher wattage soldering iron can cause the etched circuit wiring to separate from the board base material and melt the insulation from small wiring. Always keep the soldering iron tip properly tinned to ensure the best head transfer to the solder joint. Apply only enough heat to remove the component or to make a good solder joint. To protect heat sensitive components, hold the component lead with a pair of long-nose pliers between the component body and the solder joint. Use a solder removing wick to remove excess solder from connections or to clean circuit board pads.

Semiconductors

To remove in-line integrated circuits use an extracting tool. This tool is available from Tektronix, Inc.; order Tektronix Part Number 003-0619-00. If an extracting tool is not available, use care to avoid damaging the pins. Pull slowly and evenly on both ends of the integrated circuit. Try to avoid disengaging one end before the other end.

Coaxial Cables

If the coaxial cable to the FUNCTION OUTPUT front panel connector is damaged, replace the entire cable assembly. Other coaxial cables in the AA 5001 can be replaced or repaired as necessary.

Exterior Cleaning

Chassis. Accumulated dust on the instrument chassis can be removed with a soft cloth or small brush. Remove dirt that remains with a soft cloth dampened in a mild detergent and water solution; then remove the detergent with a

Scan by Zenith

cloth dampened in clean water. Do not use abrasive cleaners.

Front Panel. Use only a cotton swab or soft cloth, dampened in isopropyl alcohol or water.

CAUTION

To avoid damage, use only isopropyl alcohol or water. Do not use petroleum based cleansing agents. Before using any other type of cleaner, consult your Tektronix Service Center or representative for information.

Interior Cleaning

Clean circuit boards only when required for operation to specified performance. Dust in the interior of the instrument should be removed occasionally due to its electrical conductivity under high humidity conditions.

The best way to clean the interior is to blow off the accumulated dust with dry, low-velocity air (approximately 5 lb/in^2). Then use a soft brush.

Do not scrape or use an eraser to clean the edge connector contacts. Abrasive cleaning can remove the gold plating.

Isopropyl alcohol can be used to clean major repairs to the circuit board; however, flush the board well with clean, isopropyl alcohol. Make certain that resin or dirt is carefully removed from board areas having high impedance circuitry.

CAUTION

Circuit boards and components must be dry before applying power.

GPIB ADDRESS AND MESSAGE TERMINATOR SWITCHES

Setting the GPIB Address Switches

A single bank of six switches is located on the GPIB circuit board and are accessable through the rear panel. See Fig. 6-5.

Five of these switches (A5 through A1) set the desired value of the lower five bits of the listen and talk addresses for the AA 5001. The decimal value of these switches is called the instrument"s primary address which corresponds to the listen and talk addresses. See Table 6-2.

The AA 5001 microprocessor reads these switches only at each power-up event.

The address byte sent by the controller is actually eight bits wide. Bits 5 through 1 are for the primary address set according to Table 6-2, while bits 7 and 6 determine whether the byte is a listen address (32 + primary address) or a talk address (64 + primary address). Secondary address bytes (where bits 7 and 6 are both logical 1) are not used by the AA 5001, so they are ignored.

Before power-up, set switches A1 through A5 (see Table 6-2) as desired. Do not set primary address 0 when using TEKTRONIX 4050-Series controllers. They reserve primary address 0 for themselves. Setting the primary address to 31 logically removes the AA 5001 from the GPIB. It does not respond to any GPIB addresses or commands and remains both unlistened (UNL) and untalked (UNT).

The AA 5001 is factory set to primary address 28 and EOI ONLY.

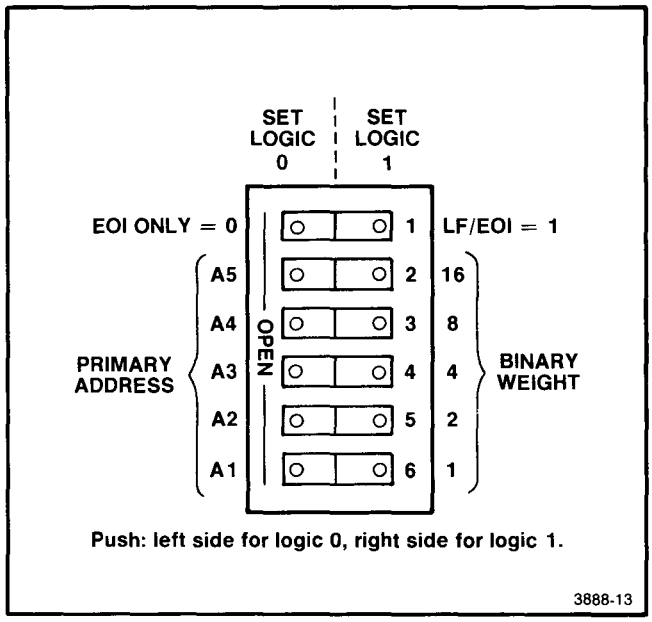

Fig. 6-5. GPIB address and message terminator switches.

Scan by Zenith

Table 6-2
IEEE 488 (GPIB)
PRIMARY ADDRESSES

Switches					Primary Address
A5	A4	A3	A2	A1	
0	0	0	0	0	0
0	0	0	0	1	1
0	0	0	1	0	2
0	0	0	1	1	3
0	0	1	0	0	4
0	0	1	0	1	5
0	0	1	1	0	6
0	0	1	1	1	7
0	1	0	0	0	8
0	1	0	0	1	9
0	1	0	1	0	10
0	1	0	1	1	11
0	1	1	0	0	12
0	1	1	0	1	13
0	1	1	1	0	14
0	1	1	1	1	15
1	0	0	0	0	16
1	0	0	0	1	17
1	0	0	1	0	18
1	0	0	1	1	19
1	0	1	0	0	20
1	0	1	0	1	21
1	0	1	1	0	22
1	0	1	1	1	23
1	1	0	0	0	24
1	1	0	0	1	25
1	1	0	1	0	26
1	1	0	1	1	27
1	1	1	0	0	28
1	1	1	0	1	29
1	1	1	1	0	30
1	1	1	1	1	31

Setting the Message Terminator Switch

The top switch (number 1), illustrated in Fig. 6-5, is used to select the terminator of both input and output messages on the GPIB.

With EOI ONLY selected as the terminator, the instrument interprets a data byte received with EOI asserted as the end of an input message string. It also asserts EOI concurrently with the last byte of an output message.

With LF/EOI selected as the terminator, the instrument interprets the line feed (LF) character or the assertion of EOI concurrently with a data byte as the end of an input message. The AA 5001 also transmits the carriage return (CR) and line feed (LF), with EOI asserted along with LF, to terminate output messages.

The AA 5001 is factory set to primary address 28 and EOI ONLY.

TROUBLESHOOTING INFORMATION

Introduction

Troubleshooting information for the AA 5001 includes hardware tests, troubleshooting tables, and signature analysis for selected digital circuits.

If an error code is returned to the controller in response to an ERR? query, refer to the error code definitions in the Programming section of this manual. The only error codes that indicate instrument malfunction are those classified as Internal Errors in the error code list.

Hardware Tests

The hardware is tested by the AA 5001 firmware in two ways:

- Power-on Self Tests
- Test Query

Power-on Self Test

The power-on self tests run each hardware test once. If an error occurs, the AA 5001 front panel display is set to the code of the first error detected. The AA 5001 will not perform any other functions if an error has occurred.

The tests performed and their corresponding error displays are listed in Table 6-3.

Scan by Zenith

Table 6-3
FRONT PANEL ERROR DISPLAY
POWER-ON SELF TESTS

ERROR	DISPLAY LEDS			
	REM	ADRS	dBm	dB
Bad RAM (high nibble) U3043	OFF	ON	FLASHING	FLASHING
Bad RAM (low nibble) U3034	OFF	OFF	FLASHING	FLASHING
Bad ROM U4030	ON	OFF	FLASHING	FLASHING

The Test Query

The second test method is the TEST? (TEST query). This performs only the ROM test. TEST? is sent to the AA 5001 over the GPIB. When received, the AA 5001 will:

1. Save the current state of the machine.
2. Perform the ROM test.
3. Reports the error, if any, in the form:
   TEST 394;

   If no errors are detected, the response is:
   TEST 0;
4. The AA 5001 is returned to its settings prior to the TEST? execution.

Signature Analysis

To enable the signature analysis mode:

1. Remove the AA 5001 left panel (refer to Circuit Board Removal).

2. Locate the GPIB board jumper, J3021 (refer to the Parts Location Grids located in the pull-out pages) and connect it to the SA position.

3. Insert the AA 5001 into a TM 5000-Series Power Module, using an extender cable, and turn on the power module.

NOTE

The AA 5001 will not perform other functions, while in the signature analysis mode.

Signature analysis information for troubleshooting some AA 5001 digital circuitry is provided in the pullout pages in the back of this manual.

NOTE

After repositioning the jumper to enable or disable the signature analysis mode, turn the power module off and then back on to re-initialize the AA 5001 microprocessor.

Troubleshooting High Residual Distortion Problems

Refer to Table 6-4 and the following.

Because of the ultra-low distortion and noise levels in the AA 5001, the following precautions and suggestions will save considerable time and minimize erroneous diagnosis.

1. Use only the recommmended SG 5010 or SG 505 (preferred) oscillators as signal sources. An AA 5001 residual distortion reading will include the effects of noise and distortion contributions from both oscillator and analyzer. Using other oscillators may give inferior results.
2. Perform servicing only in a "quiet" environment, free from excessive electromagnetic interference. Without its shielding, a disassembled AA 5001 is susceptable to stray fields from power transformers, flourescent lights, and particularly raster-scan monitors. Monitors of this type should be turned off, or located at least 5 meters away during troubleshooting.
3. Avoid the use of general purpose bnc connector terminators. Many terminators have voltage coefficients that cause excessive distortion, compared to that of the AA 5001.
4. Connect an oscilloscope system to the FUNCTION OUTPUT, for observation of the residual products actually being measured. Some problems, with high residual readings do not involve distortion but are caused by excessive noise or incomplete fundamental nulling.

Slightly high (or just marginal) residual distortion performance is usually caused by a degradation of a single component in the main signal path.

Scan by Zenith

Semi-conductor devices should be investigated first in the following order of probability: LDRs (light dependent resistors), op-amps (operational amplifiers), and transistors or diodes. Table 6-4 lists some of the more common distortion/noise behavior symptoms along with the most probable defective components.

During disassembly, repair, and reassembly, use good static control measures. Even small static discharges can induce soft failures in the LDRs or op-amps resulting in substantially higher distortion or noise contribution. Also, exercise care when soldering LDRs and op-amps to minimize the chance of heat damage, which can have a similar degrading effect.

Unusually high residual distortion readings (0.1% to 100%) are often the result of band or range selection malfunctions. Check the appropriate relays, as suggested by the symptoms first. Other possible causes may be found in the band discriminator or ranging logic circuitry.

Table 6-4
HIGH DISTORTION/NOISE SYMPTOMS AND PROBABLE CAUSES

SYMPTOM	CHECK OR REPLACE
1. High THD near tops of internal frequency bands (e.g., 250-270 Hz; 750-950 Hz)	• Misadjustment of R5025 (LDR Balance to compensate for aging and characteristics mismatch) • U4011, U5010 LDRs
2. High THD at all frequencies but varies with input level within a given range	• U5051, U5051 LDRs
3. High 100 kHz THD with either input polarity	• U4051 or U4021 op-amps • (More rarely) U4020 or U4061 op-amps • Also check op-amp compensation elements
4. High 100 kHz THD with one input polarity only	• Q4060, Q4071 or Q4061, Q4070 diode connected clamps • U4051 or U4021 op-amps
5. High or elevated 10 kHz THD but, 20 kHz is useable (30 kHz THD may also be relatively high)	• U4021 op-amp
6. High 30 Hz THD but, 20-25 Hz is useable	• U1011 op-amp (excessive offsets will cause control voltage ripple)
7. High THD readings at all frequencies but, dominant component is noise	• U4051 op-amp
8. High THD readings at all frequencies but, dominant component is fundamental	• Misadjustment of R1023 or R1030 • U2020 • (Rarely) C2020 or C2021 is leaky
9. Unusually high THD readings at lower band edge frequencies (e.g., 100 Hz, 2.8 kHz). Dominant component is fundamental	• U4011, U5010 LDRs • U2024 and related drive components
10. High CCIF IMD but, SMPTE IMD is usable (will often occur with symptom #2)	• U5041, U5051 LDRs • U4051 op-amp • (Rarely) C2032 or C1010 is open
11. High SMPTE IMD but, CCIF IMD is usable	• U8051 multiplexer (on IMD board) • U3031A and related control loop components

Scan by Zenith

OPTIONS

There are no options for the AA 5001 at this time.

Scan by Zenith

REPLACEABLE ELECTRICAL PARTS

PARTS ORDERING INFORMATION

Replacement parts are available from or through your local Tektronix, Inc. Field Office or representative.

Changes to Tektronix instruments are sometimes made to accommodate improved components as they become available, and to give you the benefit of the latest circuit improvements developed in our engineering department. It is therefore important, when ordering parts, to include the following information in your order: Part number, instrument type or number, serial number, and modification number if applicable.

If a part you have ordered has been replaced with a new or improved part, your local Tektronix, Inc. Field Office or representative will contact you concerning any change in part number.

Change information, if any, is located at the rear of this manual.

LIST OF ASSEMBLIES

A list of assemblies can be found at the beginning of the Electrical Parts List. The assemblies are listed in numerical order. When the complete component number of a part is known, this list will identify the assembly in which the part is located.

CROSS INDEX-MFR. CODE NUMBER TO MANUFACTURER

The Mfr. Code Number to Manufacturer index for the Electrical Parts List is located immediately after this page. The Cross Index provides codes, names and addresses of manufacturers of components listed in the Electrical Parts List.

ABBREVIATIONS

Abbreviations conform to American National Standard Y1.1.

COMPONENT NUMBER (column one of the Electrical Parts List)

A numbering method has been used to identify assemblies, subassemblies and parts. Examples of this numbering method and typical expansions are illustrated by the following:

Example a.

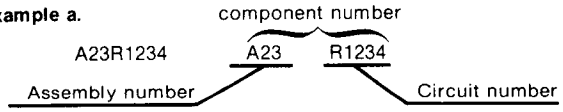

Read: Resistor 1234 of Assembly 23

Example b.

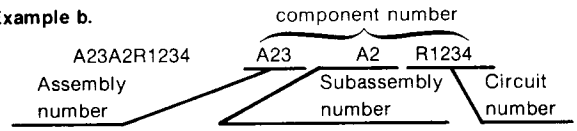

Read: Resistor 1234 of Subassembly 2 of Assembly 23

Only the circuit number will appear on the diagrams and circuit board illustrations. Each diagram and circuit board illustration is clearly marked with the assembly number. Assembly numbers are also marked on the mechanical exploded views located in the Mechanical Parts List. The component number is obtained by adding the assembly number prefix to the circuit number.

The Electrical Parts List is divided and arranged by assemblies in numerical sequence (e.g., assembly A1 with its subassemblies and parts, precedes assembly A2 with its subassemblies and parts).

Chassis-mounted parts have no assembly number prefix and are located at the end of the Electrical Parts List.

TEKTRONIX PART NO. (column two of the Electrical Parts List)

Indicates part number to be used when ordering replacement part from Tektronix.

SERIAL/MODEL NO. (columns three and four of the Electrical Parts List)

Column three (3) indicates the serial number at which the part was first used. Column four (4) indicates the serial number at which the part was removed. No serial number entered indicates part is good for all serial numbers.

NAME & DESCRIPTION (column five of the Electrical Parts List)

In the Parts List, an Item Name is separated from the description by a colon (:). Because of space limitations, an Item Name may sometimes appear as incomplete. For further Item Name identification, the U.S. Federal Cataloging Handbook H6-1 can be utilized where possible.

MFR. CODE (column six of the Electrical Parts List)

Indicates the code number of the actual manufacturer of the part. (Code to name and address cross reference can be found immediately after this page.)

MFR. PART NUMBER (column seven of the Electrical Parts List)

Indicates actual manufacturers part number.

Scan by Zenith

CROSS INDEX—MFR. CODE NUMBER TO MANUFACTURER

Mfr. Code	Manufacturer	Address	City, State, Zip
000GS	A P PRODUCTS, INC.	BOX 110	PAINESVILLE, OHIO 44077
00779	AMP, INC.	P.O. BOX 3608	HARRISBURG, PA 17105
00853	SANGAMO ELECTRIC CO., S. CAROLINA DIV.	P.O. BOX 128	PICKENS, SC 29671
01121	ALLEN-BRADLEY COMPANY	1201 2ND STREET SOUTH	MILWAUKEE, WI 53204
01295	TEXAS INSTRUMENTS, INC. SEMICONDUCTOR GROUP	P.O. BOX 5012	DALLAS, TX 75222
02735	RCA CORPORATION, SOLID STATE DIVISION	ROUTE 202	SOMERVILLE, NY 08876
03508	GENERAL ELECTRIC COMPANY, SEMI-CONDUCTOR PRODUCTS DEPARTMENT	ELECTRONICS PARK	SYRACUSE, NY 13201
04222	AVX CERAMICS, DIVISION OF AVX CORP.	P O BOX 867	MYRTLE BEACH, SC 29577
04713	MOTOROLA, INC., SEMICONDUCTOR PROD. DIV.	5005 E MCDOWELL RD,PO BOX 20923	PHOENIX, AZ 85036
05397	UNION CARBIDE CORPORATION, MATERIALS SYSTEMS DIVISION	11901 MADISON AVENUE	CLEVELAND, OH 44101
07263	FAIRCHILD SEMICONDUCTOR, A DIV. OF FAIRCHILD CAMERA AND INSTRUMENT CORP.	464 ELLIS STREET	MOUNTAIN VIEW, CA 94042
08806	GENERAL ELECTRIC CO., MINIATURE LAMP PRODUCTS DEPARTMENT	NELA PARK	CLEVELAND, OH 44112
12969	UNITRODE CORPORATION	580 PLEASANT STREET	WATERTOWN, MA 02172
13511	AMPHENOL CARDRE DIV., BUNKER RAMO CORP.		LOS GATOS, CA 95030
14433	ITT SEMICONDUCTORS	3301 ELECTRONICS WAY P O BOX 3049	WEST PALM BEACH, FL 33402
14552	MICRO SEMICONDUCTOR CORP.	2830 E FAIRVIEW ST.	SANTA ANA, CA 92704
14752	ELECTRO CUBE INC.	1710 S. DEL MAR AVE.	SAN GABRIEL, CA 91776
17856	SILICONIX, INC.	2201 LAURELWOOD DRIVE	SANTA CLARA, CA 95054
18178	VACTEC, INC.	2423 NORTHLINE INDUSTRIAL BLVD.	MARYLAND HEIGHTS, MO 63043
18324	SIGNETICS CORP.	811 E. ARQUES	SUNNYVALE, CA 94086
19396	ILLINOIS TOOL WORKS, INC. PAKTRON DIV.	900 FOLLIN LANE, SE	VIENNA, VA 22180
21317	ELECTRONIC APPLICATIONS COMPANY	2213 EDWARDS AVENUE	SOUTH EL MONTE, CA 91733
22526	BERG ELECTRONICS, INC.	YOUK EXPRESSWAY	NEW CUMBERLAND, PA 17070
24211	GRIGSBY-BARTON INC.	3800 INDUSTRIAL DRIVE	ROLLING MEADOWS, IL 60008
24355	ANALOG DEVICES INC.	RT 1 INDUSTRIAL PK,P O BOX 280	NORWOOD, MA 02062
24546	CORNING GLASS WORKS, ELECTRONIC COMPONENTS DIVISION	550 HIGH STREET	BRADFORD, PA 16701
24931	SPECIALITY CONNECTOR CO., INC.	2620 ENDRESS PLACE	GREENWOOD, IN 46142
27014	NATIONAL SEMICONDUCTOR CORP.	2900 SEMICONDUCTOR DR.	SANTA CLARA, CA 95051
32293	INTERSIL, INC.	10900 N. TANTAU AVE.	CUPERTINO, CA 95014
32997	BOURNS, INC., TRIMPOT PRODUCTS DIV.	1200 COLUMBIA AVE.	RIVERSIDE, CA 92507
34630	TYCO FILTERS DIV., INC.	3940 W. MONTECITO	PHOENIX, AZ 85019
50157	MIDWEST COMPONENTS INC.	P. O. BOX 787 1981 PORT CITY BLVD.	MUSKEGON, MI 49443
50434	HEWLETT-PACKARD COMPANY	640 PAGE MILL ROAD	PALO ALTO, CA 94304
50558	ELECTRONIC CONCEPTS, INC.	526 INDUSTRIAL WAY WEST	EATONTOWN, NJ 07724
51642	CENTRE ENGINEERING INC.	2820 E COLLEGE AVENUE	STATE COLLEGE, PA 16801
54473	MATSUSHITA ELECTRIC, CORP. OF AMERICA	1 PANASONIC WAY	SECAUCUS, NJ 07094
55680	NICHICON/AMERICA/CORP.	6435 N PROESEL AVENUE	CHICAGO, IL 60645
56289	SPRAGUE ELECTRIC CO.	87 MARSHALL ST.	NORTH ADAMS, MA 01247
57668	R-OHM CORP.	16931 MILLIKEN AVE.	IRVINE, CA 92713
58361	GENERAL INSTRUMENT CORP. OPTO ELECTRONICS DIV.	3400 HILLVIEW AVE	PALO ALTO, CA 94304
59660	TUSONIX INC.	2155 N FORBES BLVD	TUCSON, AZ 85705
71400	BUSSMAN MFG., DIVISION OF MCGRAW-EDISON CO.	2536 W. UNIVERSITY ST.	ST. LOUIS, MO 63107
71590	CENTRALAB ELECTRONICS, DIV. OF GLOBE-UNION, INC.	P O BOX 858	FORT DODGE, IA 50501
71744	CHICAGO MINIATURE LAMP WORKS	4433 RAVENSWOOD AVE.	CHICAGO, IL 60640
72982	ERIE TECHNOLOGICAL PRODUCTS, INC.	644 W. 12TH ST.	ERIE, PA 16512
73138	BECKMAN INSTRUMENTS, INC., HELIPOT DIV.	2500 HARBOR BLVD.	FULLERTON, CA 92634
74970	JOHNSON, E. F., CO.	299 10TH AVE. S. W.	WASECA, MN 56093
76493	BELL INDUSTRIES, INC., MILLER, J. W., DIV.	19070 REYES AVE., P O BOX 5825	COMPTON, CA 90224
80009	TEKTRONIX, INC.	P O BOX 500	BEAVERTON, OR 97077
81073	GRAYHILL, INC.	561 HILLGROVE AVE., PO BOX 373	LA GRANGE, IL 60525
84411	TRW ELECTRONIC COMPONENTS, TRW CAPACITORS	112 W. FIRST ST.	OGALLALA, NE 69153
90201	MALLORY CAPACITOR CO., DIV. OF P. R. MALLORY AND CO., INC.	3029 E. WASHINGTON STREET P. O. BOX 372	INDIANAPOLIS, IN 46206
91637	DALE ELECTRONICS, INC.	P. O. BOX 609	COLUMBUS, NE 68601
95348	GORDOS CORPORATION	250 GLENWOOD AVENUE	BLOOMFIELD, NJ 07003
96733	SAN FERNANDO ELECTRIC MFG CO	1501 FIRST ST	SAN FERNANDO, CA 91341

Scan by Zenith

CROSS INDEX—MFR. CODE NUMBER TO MANUFACTURER

Mfr. Code	Manufacturer	Address	City, State, Zip
T0900	UNITED CHEMI-CON	9801 W. HIGGINS ROAD	ROSEMONT,IL 60018

Scan by Zenith

Component No.	Tektronix Part No.	Serial/Model No. Eff	Dscont	Name & Description	Mfr Code	Mfr Part Number
A10	670-7992-00			CKT BOARD ASSY:DISPLAY	80009	670-7992-00
A12	670-7994-00			CKT BOARD ASSY:LOGIC	80009	670-7994-00
A13	670-8104-00			CKT BOARD ASSY:IMD	80009	670-8104-00
A14	670-7995-00			CKT BOARD ASSY:INPUT & NOTCH	80009	670-7995-00
A15	670-7996-00			CKT BOARD ASSY:MAIN	80009	670-7996-00
A15	----- -----			(STANDARD ONLY)		
A15	670-8319-00			CKT BOARD ASSY:MAIN	80009	670-8319-00
A15	----- -----			(OPTION 02 ONLY)		
A16	670-7993-00			CKT BOARD ASSY:GPIB	80009	670-7993-00
.						
.						
A10	670-7992-00			CKT BOARD ASSY:DISPLAY	80009	670-7992-00
.						
A10DS1010	150-1083-00			LAMP,LED RDOUT:RED,10 ELEM BAR GRAPH	50434	HDSP-4820
A10DS1021	150-1053-00			LAMP,LED RDOUT:ORANGE,7 SEG,0.4 DIGIT	58361	Q3411
A10DS1022	150-1053-00			LAMP,LED RDOUT:ORANGE,7 SEG,0.4 DIGIT	58361	Q3411
A10DS1023	150-1053-00			LAMP,LED RDOUT:ORANGE,7 SEG,0.4 DIGIT	58361	Q3411
A10DS1030	150-1053-00			LAMP,LED RDOUT:ORANGE,7 SEG,0.4 DIGIT	58361	Q3411
A10DS1031	150-1053-00			LAMP,LED RDOUT:ORANGE,7 SEG,0.4 DIGIT	58361	Q3411
A10DS1041	150-1112-00			LT EMITTING DIO:RED 635NM,60MA	50434	HLMP-2620
A10DS1042	150-1112-00			LT EMITTING DIO:RED 635NM,60MA	50434	HLMP-2620
A10DS2010	150-1061-00			LT EMITTING DIO:RED,660NM,50MA MAX	50434	HLMP-1301
A10DS2011	150-1061-00			LT EMITTING DIO:RED,660NM,50MA MAX	50434	HLMP-1301
A10J2011	131-1857-00			TERM. SET,PIN:36/0.025 SQ PIN,ON 0.1 CTRS	22526	65500136
A10J2012	131-1857-00			TERM. SET,PIN:36/0.025 SQ PIN,ON 0.1 CTRS	22526	65500136
A10J2030	131-2238-00			CONN,RCPT,ELEC:CKT BD,2 X 20,MALE	000GS	OBD
A10J2040	131-1857-00			TERM. SET,PIN:36/0.025 SQ PIN,ON 0.1 CTRS	22526	65500136
A10R1010	315-0431-00			RES.,FXD,CMPSN:430 OHM,5%,0.25W	01121	CB4315
A10R1011	315-0431-00			RES.,FXD,CMPSN:430 OHM,5%,0.25W	01121	CB4315
A10R1012	315-0431-00			RES.,FXD,CMPSN:430 OHM,5%,0.25W	01121	CB4315
A10R1013	315-0431-00			RES.,FXD,CMPSN:430 OHM,5%,0.25W	01121	CB4315
A10R1031	315-0331-00			RES.,FXD,CMPSN:330 OHM,5%,0.25W	01121	CB3315
A10R1032	315-0331-00			RES.,FXD,CMPSN:330 OHM,5%,0.25W	01121	CB3315
A10R2010	315-0681-00			RES.,FXD,CMPSN:680 OHM,5%,0.25W	01121	CB6815
A10R2021	315-0431-00			RES.,FXD,CMPSN:430 OHM,5%,0.25W	01121	CB4315
A10R2022	315-0431-00			RES.,FXD,CMPSN:430 OHM,5%,0.25W	01121	CB4315
A10R2031	315-0331-00			RES.,FXD,CMPSN:330 OHM,5%,0.25W	01121	CB3315

Scan by Zenith

Component No.	Tektronix Part No.	Serial/Model No. Eff	Dscont	Name & Description	Mfr Code	Mfr Part Number
A12	670-7994-00			CKT BOARD ASSY:LOGIC	80009	670-7994-00
A12C2091	290-0748-00			CAP.,FXD,ELCTLT:10UF,+50-10%,25V	T0900	SL25T10(T)TP
A12C3101	281-0775-00			CAP.,FXD,CER DI:0.1UF,20%,50V	04222	MA205E104MAA
A12C4103	281-0775-00			CAP.,FXD,CER DI:0.1UF,20%,50V	04222	MA205E104MAA
A12C4121	281-0775-00			CAP.,FXD,CER DI:0.1UF,20%,50V	04222	MA205E104MAA
A12C7051	281-0775-00			CAP.,FXD,CER DI:0.1UF,20%,50V	04222	MA205E104MAA
A12C7133	281-0814-00			CAP.,FXD,CER DI:100PF,10%,100V	04222	GC101A101K
A12C7135	281-0772-00			CAP.,FXD,CER DI:0.0047UF,10%,100V	04222	GC701C472K
A12C8135	281-0773-00			CAP.,FXD,CER DI:0.01UF,10%,100V	04222	MA201C103KAA
A12CR1111	152-0141-02			SEMICOND DEVICE:SILICON,30V,150MA	01295	1N4152R
A12CR2131	152-0141-02			SEMICOND DEVICE:SILICON,30V,150MA	01295	1N4152R
A12CR2133	152-0141-02			SEMICOND DEVICE:SILICON,30V,150MA	01295	1N4152R
A12CR4031	152-0141-02			SEMICOND DEVICE:SILICON,30V,150MA	01295	1N4152R
A12CR4051	152-0141-02			SEMICOND DEVICE:SILICON,30V,150MA	01295	1N4152R
A12CR5031	152-0141-02			SEMICOND DEVICE:SILICON,30V,150MA	01295	1N4152R
A12CR5033	152-0141-02			SEMICOND DEVICE:SILICON,30V,150MA	01295	1N4152R
A12CR5035	152-0141-02			SEMICOND DEVICE:SILICON,30V,150MA	01295	1N4152R
A12CR5037	152-0141-02			SEMICOND DEVICE:SILICON,30V,150MA	01295	1N4152R
A12CR5039	152-0141-02			SEMICOND DEVICE:SILICON,30V,150MA	01295	1N4152R
A12CR5081	152-0141-02			SEMICOND DEVICE:SILICON,30V,150MA	01295	1N4152R
A12CR5131	152-0141-02			SEMICOND DEVICE:SILICON,30V,150MA	01295	1N4152R
A12CR5133	152-0141-02			SEMICOND DEVICE:SILICON,30V,150MA	01295	1N4152R
A12CR6031	152-0141-02			SEMICOND DEVICE:SILICON,30V,150MA	01295	1N4152R
A12CR6033	152-0141-02			SEMICOND DEVICE:SILICON,30V,150MA	01295	1N4152R
A12CR6035	152-0141-02			SEMICOND DEVICE:SILICON,30V,150MA	01295	1N4152R
A12CR6131	152-0141-02			SEMICOND DEVICE:SILICON,30V,150MA	01295	1N4152R
A12J1031	131-1426-00			TERM SET,PIN:(36) 0.025 SQ RTANG,0.25L	22526	65524-136
A12J1040	131-1934-00			TERM. SET,PIN:1 X 36,0.1 CTR,0.9 L	22526	65539-001
A12J1050	131-1934-00			TERM. SET,PIN:1 X 36,0.1 CTR,0.9 L	22526	65539-001
A12J1051	131-1426-00			TERM SET,PIN:(36) 0.025 SQ RTANG,0.25L	22526	65524-136
A12J1072	131-1426-00			TERM SET,PIN:(36) 0.025 SQ RTANG,0.25L	22526	65524-136
A12J1091	131-1426-00			TERM SET,PIN:(36) 0.025 SQ RTANG,0.25L	22526	65524-136
A12J1141	131-1857-00			TERM. SET,PIN:36/0.025 SQ PIN,ON 0.1 CTRS	22526	65500136
A12J1181	131-1857-00			TERM. SET,PIN:36/0.025 SQ PIN,ON 0.1 CTRS	22526	65500136
A12J2060	131-1934-00			TERM. SET,PIN:1 X 36,0.1 CTR,0.9 L	22526	65539-001
A12J7171	131-1857-00			TERM. SET,PIN:36/0.025 SQ PIN,ON 0.1 CTRS	22526	65500136
A12Q2041	151-0190-00			TRANSISTOR:SILICON,NPN	07263	S032677
A12Q2043	151-0190-00			TRANSISTOR:SILICON,NPN	07263	S032677
A12Q2051	151-0190-00			TRANSISTOR:SILICON,NPN	07263	S032677
A12Q2053	151-0190-00			TRANSISTOR:SILICON,NPN	07263	S032677
A12Q2055	151-0190-00			TRANSISTOR:SILICON,NPN	07263	S032677
A12Q2061	151-0190-00			TRANSISTOR:SILICON,NPN	07263	S032677
A12Q2063	151-0190-00			TRANSISTOR:SILICON,NPN	07263	S032677
A12Q2071	151-0190-00			TRANSISTOR:SILICON,NPN	07263	S032677
A12Q2081	151-0190-00			TRANSISTOR:SILICON,NPN	07263	S032677
A12Q2181	151-0302-00			TRANSISTOR:SILICON,NPN	07263	S038487
A12Q2183	151-0302-00			TRANSISTOR:SILICON,NPN	07263	S038487
A12Q3081	151-0190-00			TRANSISTOR:SILICON,NPN	07263	S032677
A12Q3111	151-0301-00			TRANSISTOR:SILICON,PNP	27014	2N2907A
A12Q7091	151-0190-00			TRANSISTOR:SILICON,NPN	07263	S032677
A12Q8161	151-1025-00			TRANSISTOR:SILICON,JFE,N-CHANNEL	01295	SFB8129
A12R1121	315-0511-00			RES.,FXD,CMPSN:510 OHM,5%,0.25W	01121	CB5115
A12R1141	315-0513-00			RES.,FXD,CMPSN:51K OHM,5%,0.25W	01121	CB5135

Scan by Zenith

Component No.	Tektronix Part No.	Serial/Model No. Eff	Dscont	Name & Description	Mfr Code	Mfr Part Number
A12R1143	315-0104-00			RES.,FXD,CMPSN:100K OHM,5%,0.25W	01121	CB1045
A12R1151	321-0323-00			RES.,FXD,FILM:22.6K OHM,1%,0.125W	91637	MFF1816G22601F
A12R1171	321-0960-07			RES.,FXD,FILM:513 OHM,0.1%,0.125W	24546	NE55E5130B
A12R1173	321-0397-00			RES.,FXD,FILM:133K OHM,1%,0.125W	91637	CMF55116G13302F
A12R2021	315-0513-00			RES.,FXD,CMPSN:51K OHM,5%,0.25W	01121	CB5135
A12R2031	315-0223-00			RES.,FXD,CMPSN:22K OHM,5%,0.25W	01121	CB2235
A12R2061	315-0513-00			RES.,FXD,CMPSN:51K OHM,5%,0.25W	01121	CB5135
A12R2071	315-0223-00			RES.,FXD,CMPSN:22K OHM,5%,0.25W	01121	CB2235
A12R2111	321-0753-06			RES.,FXD,FILM:9K OHM,0.25%,0.125W	91637	MFF1816C90000C
A12R2113	321-0318-07			RES.,FXD,FILM:20K OHM,0.1%,0.125W	24546	NE55E2002B
A12R2133	321-0614-00			RES.,FXD,FILM:10.1K OHM,1%,0.125W	91637	MFF1816G10101F
A12R2141	321-0208-00			RES.,FXD,FILM:1.43K OHM,1%,0.125W	91637	MFF1816G14300F
A12R2143	321-0193-01			RES.,FXD,FILM:1K OHM,0.5%,0.125W	91637	MFF1816G10000D
A12R2145	315-0122-00			RES.,FXD,CMPSN:1.2K OHM,5%,0.25W	01121	CB1225
A12R2161	311-1339-00			RES.,VAR,NONWIR:5K OHM,10%,0.50W	73138	89-131-1
A12R2171	315-0392-00			RES.,FXD,CMPSN:3.9K OHM,5%,0.25W	01121	CB3925
A12R2173	315-0362-00			RES.,FXD,CMPSN:3.6K OHM,5%,0.25W	01121	CB3625
A12R2175	315-0362-00			RES.,FXD,CMPSN:3.6K OHM,5%,0.25W	01121	CB3625
A12R3051	315-0513-00			RES.,FXD,CMPSN:51K OHM,5%,0.25W	01121	CB5135
A12R3053	315-0223-00			RES.,FXD,CMPSN:22K OHM,5%,0.25W	01121	CB2235
A12R3055	315-0223-00			RES.,FXD,CMPSN:22K OHM,5%,0.25W	01121	CB2235
A12R3057	315-0223-00			RES.,FXD,CMPSN:22K OHM,5%,0.25W	01121	CB2235
A12R3061	315-0223-00			RES.,FXD,CMPSN:22K OHM,5%,0.25W	01121	CB2235
A12R3063	315-0223-00			RES.,FXD,CMPSN:22K OHM,5%,0.25W	01121	CB2235
A12R3065	315-0513-00			RES.,FXD,CMPSN:51K OHM,5%,0.25W	01121	CB5135
A12R3071	315-0223-00			RES.,FXD,CMPSN:22K OHM,5%,0.25W	01121	CB2235
A12R3073	315-0223-00			RES.,FXD,CMPSN:22K OHM,5%,0.25W	01121	CB2235
A12R3081	321-0205-00			RES.,FXD,FILM:1.33K OHM,1%,0.125W	91637	MFF1816G13300F
A12R3083	321-0222-00			RES.,FXD,FILM:2K OHM,1%,0.125W	91637	MFF1816G20000F
A12R3085	321-0324-00			RES.,FXD,FILM:23.2K OHM,1%,0.125W	91637	MFF1816G23201F
A12R3091	321-0336-00			RES.,FXD,FILM:30.9K OHM,1%,0.125W	91637	CMF55116G30901F
A12R3101	315-0103-00			RES.,FXD,CMPSN:10K OHM,5%,0.25W	01121	CB1035
A12R3102	321-0638-00			RES.,FXD,FILM:7.96K OHM,1%,0.125W	24546	NA55D7961F
A12R3103	315-0360-00			RES.,FXD,CMPSN:36 OHM,5%,0.25W	01121	CB3605
A12R3104	315-0475-00			RES.,FXD,CMPSN:4.7M OHM,5%,0.25W	01121	CB4755
A12R3105	321-0023-01			RES.,FXD,FILM:16.9 OHM,0.5%,0.125W	91637	MFF1816G16R90D
A12R3141	321-0193-01			RES.,FXD,FILM:1K OHM,0.5%,0.125W	91637	MFF1816G10000D
A12R3143	321-0816-03			RES.,FXD,FILM:5K OHM,0.25%,0.125W	91637	MFF1816D50000C
A12R3151	315-0392-00			RES.,FXD,CMPSN:3.9K OHM,5%,0.25W	01121	CB3925
A12R3171	321-0294-00			RES.,FXD,FILM:11.3K OHM,1%,0.125W	91637	CMF55116G11301F
A12R3173	321-0995-00			RES.,FXD,FILM:549K OHM,1%,0.125W	24546	NA55D5493F
A12R3181	315-0513-00			RES.,FXD,CMPSN:51K OHM,5%,0.25W	01121	CB5135
A12R3183	315-0513-00			RES.,FXD,CMPSN:51K OHM,5%,0.25W	01121	CB5135
A12R3185	315-0513-00			RES.,FXD,CMPSN:51K OHM,5%,0.25W	01121	CB5135
A12R3187	315-0513-00			RES.,FXD,CMPSN:51K OHM,5%,0.25W	01121	CB5135
A12R350	315-0470-00			RES.,FXD,CMPSN:47 OHM,5%,0.25W	01121	CB4705
A12R4051	315-0513-00			RES.,FXD,CMPSN:51K OHM,5%,0.25W	01121	CB5135
A12R4053	315-0513-00			RES.,FXD,CMPSN:51K OHM,5%,0.25W	01121	CB5135
A12R4055	315-0513-00			RES.,FXD,CMPSN:51K OHM,5%,0.25W	01121	CB5135
A12R4081	315-0202-00			RES.,FXD,CMPSN:2K OHM,5%,0.25W	01121	CB2025
A12R4083	315-0103-00			RES.,FXD,CMPSN:10K OHM,5%,0.25W	01121	CB1035
A12R4085	315-0103-00			RES.,FXD,CMPSN:10K OHM,5%,0.25W	01121	CB1035
A12R4087	315-0103-00			RES.,FXD,CMPSN:10K OHM,5%,0.25W	01121	CB1035
A12R4089	315-0103-00			RES.,FXD,CMPSN:10K OHM,5%,0.25W	01121	CB1035

Scan by Zenith

Component No.	Tektronix Part No.	Serial/Model No. Eff	Dscont	Name & Description	Mfr Code	Mfr Part Number
A12R4091	315-0363-00			RES.,FXD,CMPSN:36K OHM,5%,0.25W	01121	CB3635
A12R4101	321-0609-07			RES.,FXD,FILM:480 OHM,0.1%,0.125W	91637	MFF1816C480R0B
A12R4103	315-0202-00			RES.,FXD,CMPSN:2K OHM,5%,0.25W	01121	CB2025
A12R4121	315-0103-00			RES.,FXD,CMPSN:10K OHM,5%,0.25W	01121	CB1035
A12R4131	321-0318-07			RES.,FXD,FILM:20K OHM,0.1%,0.125W	24546	NE55E2002B
A12R4133	321-0312-00			RES.,FXD,FILM:17.4K OHM,1%,0.125W	91637	MFF1816G17401F
A12R4135	321-0318-07			RES.,FXD,FILM:20K OHM,0.1%,0.125W	24546	NE55E2002B
A12R4151	315-0104-00			RES.,FXD,CMPSN:100K OHM,5%,0.25W	01121	CB1045
A12R5111	315-0511-00			RES.,FXD,CMPSN:510 OHM,5%,0.25W	01121	CB5115
A12R5133	315-0513-00			RES.,FXD,CMPSN:51K OHM,5%,0.25W	01121	CB5135
A12R540	315-0470-00			RES.,FXD,CMPSN:47 OHM,5%.0.25W	01121	CB4705
A12R6101	315-0511-00			RES.,FXD,CMPSN:510 OHM,5%,0.25W	01121	CB5115
A12R6103	315-0511-00			RES.,FXD,CMPSN:510 OHM,5%,0.25W	01121	CB5115
A12R6105	315-0103-00			RES.,FXD,CMPSN:10K OHM,5%,0.25W	01121	CB1035
A12R6130	321-0316-00			RES.,FXD,FILM:19.1K OHM,1%,0.125W	91637	MFF1816G19101F
A12R6131	315-0513-00			RES.,FXD,CMPSN:51K OHM,5%,0.25W	01121	CB5135
A12R7041	315-0513-00			RES.,FXD,CMPSN:51K OHM,5%,0.25W	01121	CB5135
A12R7042	315-0513-00			RES.,FXD,CMPSN:51K OHM,5%,0.25W	01121	CB5135
A12R7043	315-0513-00			RES.,FXD,CMPSN:51K OHM,5%,0.25W	01121	CB5135
A12R7044	315-0513-00			RES.,FXD,CMPSN:51K OHM,5%,0.25W	01121	CB5135
A12R7046	315-0513-00			RES.,FXD,CMPSN:51K OHM,5%,0.25W	01121	CB5135
A12R7051	315-0474-00			RES.,FXD,CMPSN:470K OHM,5%,0.25W	01121	CB4745
A12R7052	315-0513-00			RES.,FXD,CMPSN:51K OHM,5%,0.25W	01121	CB5135
A12R7053	315-0513-00			RES.,FXD,CMPSN:51K OHM,5%,0.25W	01121	CB5135
A12R7055	315-0474-00			RES.,FXD,CMPSN:470K OHM,5%,0.25W	01121	CB4745
A12R7081	315-0202-00			RES.,FXD,CMPSN:2K OHM,5%,0.25W	01121	CB2025
A12R7083	315-0513-00			RES.,FXD,CMPSN:51K OHM,5%,0.25W	01121	CB5135
A12R7085	315-0513-00			RES.,FXD,CMPSN:51K OHM,5%,0.25W	01121	CB5135
A12R7087	321-0153-00			RES.,FXD,FILM:383 OHM,1%,0.125W	91637	MFF1816G383R0F
A12R7101	307-0685-00			RES NTWK,FXD,FI:OFFSET	80009	307-0685-00
A12R7121	307-0686-00			RES NTWK,FXD,FI:DBR	80009	307-0686-00
A12R7122	315-0153-00			RES.,FXD,CMPSN:15K OHM,5%,0.25W	01121	CB1535
A12R7123	315-0241-00			RES.,FXD,CMPSN:240 OHM,5%,0.25W	01121	CB2415
A12R7131	315-0104-00			RES.,FXD,CMPSN:100K OHM,5%,0.25W	01121	CB1045
A12R7133	315-0104-00			RES.,FXD,CMPSN:100K OHM,5%,0.25W	01121	CB1045
A12R7137	315-0224-00			RES.,FXD,CMPSN:220K OHM,5%,0.25W	01121	CB2245
A12R8021	315-0513-00			RES.,FXD,CMPSN:51K OHM,5%,0.25W	01121	CB5135
A12R8023	315-0513-00			RES.,FXD,CMPSN:51K OHM,5%,0.25W	01121	CB5135
A12R8025	315-0513-00			RES.,FXD,CMPSN:51K OHM,5%,0.25W	01121	CB5135
A12R8027	315-0103-00			RES.,FXD,CMPSN:10K OHM,5%,0.25W	01121	CB1035
A12R8031	315-0103-00			RES.,FXD,CMPSN:10K OHM,5%,0.25W	01121	CB1035
A12R8081	321-0777-00			RES.,FXD,FILM:5.14K OHM,1%,0.125W	24546	NA55D5141F
A12R8083	321-0222-00			RES.,FXD,FILM:2K OHM,1%,0.125W	91637	MFF1816G20000F
A12R8085	315-0513-00			RES.,FXD,CMPSN:51K OHM,5%,0.25W	01121	CB5135
A12R8091	311-1232-00			RES.,VAR,NONWIR:50K OHM,20%,0.50W	32997	3386F-T04-503
A12R8101	311-1232-00			RES.,VAR,NONWIR:50K OHM,20%,0.50W	32997	3386F-T04-503
A12R8111	311-1466-00			RES.,VAR,NONWIR:2K OHM,20%,0.5OW	73138	72-39-0
A12R8131	315-0104-00			RES.,FXD,CMPSN:100K OHM,5%,0.25W	01121	CB1045
A12R8133	315-0131-00			RES.,FXD,CMPSN:130 OHM,5%,0.25W	01121	CB1315
A12R8135	315-0104-00			RES.,FXD,CMPSN:100K OHM,5%,0.25W	01121	CB1045
A12R8151	315-0104-00			RES.,FXD,CMPSN:100K OHM,5%,0.25W	01121	CB1045
A12R8153	311-1232-00			RES.,VAR,NONWIR:50K OHM,20%,0.50W	32997	3386F-T04-503
A12S3141	260-2160-00			SWITCH,PUSH:4 BUTTON,2 POLE		
A12S4171	263-1187-00			SW CAM ACTR AS:LEVEL RANGE	80009	263-1187-00

Scan by Zenith

Component No.	Tektronix Part No.	Serial/Model No. Eff	Dscont	Name & Description	Mfr Code	Mfr Part Number
A12S6181	260-1996-00			SWITCH,PUSH:1 BUTTON,4 POLE	71590	2KAB0010001169
A12TP3131	214-0579-00			TERM,TEST POINT:BRS CD PL	80009	214-0579-00
A12TP8161	214-0579-00			TERM,TEST POINT:BRS CD PL	80009	214-0579-00
A12U2151	156-0515-00			MICROCIRCUIT,DI:TRIPLE 3-CHAN MUX	80009	156-0515-00
A12U3011	156-0756-01			MICROCIRCUIT,DI:BCD DECIMAL DECODER,SCRN	04713	MC14028BCLD
A12U3021	156-0575-03			MICROCIRCUIT,DI:3 INPUT NOR GATE,SELECTED	80009	156-0575-03
A12U3041	156-0505-00			MICROCIRCUIT,DI:4 BIT AND/OR SEL	04713	MC14519BCL
A12U4061	156-0577-02			MICROCIRCUIT,DI:QUAD 2-INP AND GATE,SEL	27014	DM74C08
A12U4071	156-0350-01			MICROCIRCUIT,DI:QUAD 2-INPUT NAND GATE	80009	156-0350-01
A12U4111	156-1200-00			MICROCIRCUIT,LI:OPERATIONAL AMPL	01295	TL074CN
A12U4121	156-1200-00			MICROCIRCUIT,LI:OPERATIONAL AMPL	01295	TL074CN
A12U5011	156-0502-02			MICROCIRCUIT,DI:4 BIT ADDER,SELECTED	80009	156-0502-02
A12U5021	156-0756-01			MICROCIRCUIT,DI:BCD DECIMAL DECODER,SCRN	04713	MC14028BCLD
A12U5051	156-0349-01			MICROCIRCUIT,DI:QUAD 2-INPUT NOR GATE	80009	156-0349-01
A12U5061	156-0505-00			MICROCIRCUIT,DI:4 BIT AND/OR SEL	04713	MC14519BCL
A12U5071	156-0756-01			MICROCIRCUIT,DI:BCD DECIMAL DECODER,SCRN	04713	MC14028BCLD
A12U5081	156-0411-00			MICROCIRCUIT,LI:QUAD-COMP,SGL SUPPLY	27014	LM339N
A12U5101	156-0048-00			MICROCIRCUIT,LI:FIVE NPN TRANSISTOR ARRAY	02735	CA3046
A12U6111	156-0579-02			MICROCIRCUIT,DI:DUAL 4 BIT BIN COUNTER,SEL	80009	156-0579-02
A12U6121	156-1200-00			MICROCIRCUIT,LI:OPERATIONAL AMPL	01295	TL074CN
A12U7011	156-0582-03			MICROCIRCUIT,DI:BINARY UP/DOWN CNTR,SCRN	04713	MC14516BCLDS
A12U7021	156-0349-01			MICROCIRCUIT,DI:QUAD 2-INPUT NOR GATE	80009	156-0349-01
A12U7041	156-0505-00			MICROCIRCUIT,DI:4 BIT AND/OR SEL	04713	MC14519BCL
A12U7061	156-0582-03			MICROCIRCUIT,DI:BINARY UP/DOWN CNTR,SCRN	04713	MC14516BCLDS
A12U7071	156-0349-01			MICROCIRCUIT,DI:QUAD 2-INPUT NOR GATE	80009	156-0349-01
A12U7101	156-0513-00			MICROCIRCUIT,DI:8-CHAN MUX	80009	156-0513-00
A12U7111	156-0579-02			MICROCIRCUIT,DI:DUAL 4 BIT BIN COUNTER,SEL	80009	156-0579-02
A12U7151	156-0961-00			MICROCIRCUIT,DI:QUAD 2-INP NAND ST	80009	156-0961-00
A12U7161	156-0366-02			MICROCIRCUIT,DI:DUAL D FLIP-FLOP,CHK	80009	156-0366-02
A12VR1091	152-0278-00			SEMICOND DEVICE:ZENER,0.4W,3V,5%	04713	SZG35009K20
A12VR2143	152-0486-00			SEMICOND DEVICE:ZENER,0.25W,6.2V,5%	80009	152-0486-00
A12W800	198-4302-00			WIRE SET,ELEC:	80009	198-4302-00

Scan by Zenith

Component No.	Tektronix Part No.	Serial/Model No. Eff	Dscont	Name & Description	Mfr Code	Mfr Part Number
A13	670-8104-00			CKT BOARD ASSY:IMD	80009	670-8104-00
A13C2011	285-1056-00			CAP.,FXD,PLSTC:1UF,2%,50V	14752	650B1A105G
A13C2021	285-1056-00			CAP.,FXD,PLSTC:1UF,2%,50V	14752	650B1A105G
A13C2051	285-0643-00			CAP.,FXD,PLSTC:0.0047UF,5%,100V	84411	TEK-180 47251
A13C2061	285-0889-00			CAP.,FXD,PLSTC:0.0027UF,5%,100V	84411	TEK180-27251
A13C2063	285-0643-00			CAP.,FXD,PLSTC:0.0047UF,5%,100V	84411	TEK-180 47251
A13C2071	285-0643-00			CAP.,FXD,PLSTC:0.0047UF,5%,100V	84411	TEK-180 47251
A13C2073	285-0643-00			CAP.,FXD,PLSTC:0.0047UF,5%,100V	84411	TEK-180 47251
A13C2081	285-1100-00			CAP.,FXD,PLSTC:0.022UF,5%,200V	19396	223J02PT485
A13C2091	285-0643-00			CAP.,FXD,PLSTC:0.0047UF,5%,100V	84411	TEK-180 47251
A13C3011	290-0804-00			CAP.,FXD,ELCTLT:10UF,+50-10%,25V	55680	ULA1E100TEA
A13C3071	281-0763-00			CAP.,FXD,CER DI:47PF,10%,100V	04222	GA101A470KAA
A13C4081	281-0763-00			CAP.,FXD,CER DI:47PF,10%,100V	04222	GA101A470KAA
A13C5011	281-0775-00			CAP.,FXD,CER DI:0.1UF,20%,50V	04222	MA205E104MAA
A13C5013	281-0775-00			CAP.,FXD,CER DI:0.1UF,20%,50V	04222	MA205E104MAA
A13C5021	285-0598-00			CAP.,FXD,PLSTC:0.01UF,5%,100V	19396	DU490B103J
A13C5023	285-0598-00			CAP.,FXD,PLSTC:0.01UF,5%,100V	19396	DU490B103J
A13C5031	283-0067-00			CAP.,FXD,CER DI:0.001UF,10%,200V	59660	835-515-Z5D0102K
A13C5045	285-1066-00			CAP.,FXD,PLSTC:0.05UF,1%,200V	14752	230B1C503F
A13C5051	285-1130-00			CAP.,FXD,PLSTC:0.22UF,1%,100V	50558	MH12D224F
A13C5053	285-0643-00			CAP.,FXD,PLSTC:0.0047UF,5%,100V	84411	TEK-180 47251
A13C5061	285-0643-00			CAP.,FXD,PLSTC:0.0047UF,5%,100V	84411	TEK-180 47251
A13C5071	285-0643-00			CAP.,FXD,PLSTC:0.0047UF,5%,100V	84411	TEK-180 47251
A13C6011	290-0524-00			CAP.,FXD,ELCTLT:4.7UF,20%,10V	90201	TDC475M010EL
A13C6071	290-0804-00			CAP.,FXD,ELCTLT:10UF,+50-10%,25V	55680	ULA1E100TEA
A13C7021	285-1056-00			CAP.,FXD,PLSTC:1UF,2%,50V	14752	650B1A105G
A13C7023	285-1100-00			CAP.,FXD,PLSTC:0.022UF,5%,200V	19396	223J02PT485
A13C7031	285-1130-00			CAP.,FXD,PLSTC:0.22UF,1%,100V	50558	MH12D224F
A13C7061	285-1050-00			CAP.,FXD,PLSTC:0.1UF,1%,200V	14752	230B1C104F
A13C8021	285-1050-00			CAP.,FXD,PLSTC:0.1UF,1%,200V	14752	230B1C104F
A13C8033	281-0775-00			CAP.,FXD,CER DI:0.1UF,20%,50V	04222	MA205E104MAA
A13C8041	281-0775-00			CAP.,FXD,CER DI:0.1UF,20%,50V	04222	MA205E104MAA
A13C8081	290-0950-00			CAP.,FXD,ELCTLT:100UF,+50-10%,50V	55680	ULB1H101TJAANA
A13CR2033	152-0141-02			SEMICOND DEVICE:SILICON,30V,150MA	01295	1N4152R
A13CR3051	152-0322-00			SEMICOND DEVICE:SILICON,15V,HOT CARRIER	50434	5082-2672
A13CR5083	152-0141-02			SEMICOND DEVICE:SILICON,30V,150MA	01295	1N4152R
A13J1053	131-1857-00			TERM. SET,PIN:36/0.025 SQ PIN,ON 0.1 CTRS	22526	65500136
A13J8011	131-1426-00			TERM SET,PIN:(36) 0.025 SQ RTANG,0.25L	22526	65524-136
A13P1053	131-0993-00			BUS,CONDUCTOR:2 WIRE BLACK	00779	850100-01
A13P4040	136-0558-00			SOCKET,PLUG-IN:6 CONTACT	00779	5-380949-6
A13Q4011	151-0190-00			TRANSISTOR:SILICON,NPN	07263	S032677
A13Q7071	151-0190-00			TRANSISTOR:SILICON,NPN	07263	S032677
A13R1011	311-1240-00			RES.,VAR,NONWIR:25K OHM,10%,0.50W	73138	72-30-0
A13R1041	315-0820-00			RES.,FXD,CMPSN:82 OHM,5%,0.25W	01121	CB8205
A13R1101	311-1237-00			RES.,VAR,NONWIR:1K OHM,10%,0.50W	32997	3386X-T07-102
A13R2021	321-0314-01			RES.,FXD,FILM:18.2K OHM,0.5%,0.125W	91637	MFF1816G18201D
A13R2031	321-0379-00			RES.,FXD,FILM:86.6K OHM,1%,0.125W	91637	MFF1816G86601F
A13R2033	301-0754-00			RES.,FXD,CMPSN:750K OHM,5%,0.50W	01121	EB7545
A13R2035	301-0361-00			RES.,FXD,CMPSN:360 OHM,5%,0.5W	01121	EB3615
A13R2041	315-0433-00			RES.,FXD,CMPSN:43K OHM,5%,0.25W	01121	CB4335
A13R2051	321-0331-00			RES.,FXD,FILM:27.4K OHM,1%,0.125W	91637	MFF1816G27401F
A13R2053	321-0291-00			RES.,FXD,FILM:10.5K OHM,1%,0.125W	91637	MFF1816G10501F
A13R2061	321-0329-00			RES.,FXD,FILM:26.1K OHM,1%,0.125W	91637	MFF1816G26101F

Scan by Zenith

Component No.	Tektronix Part No.	Serial/Model No. Eff	Dscont	Name & Description	Mfr Code	Mfr Part Number
A13R2081	321-0341-00			RES.,FXD,FILM:34.8K OHM,1%,0.125W	91637	CMF55116G34801F
A13R2091	321-0292-00			RES.,FXD,FILM:10.7K OHM,1%,0.125W	91637	MFF1816G10701F
A13R2101	315-0101-00			RES.,FXD,CMPSN:100 OHM<5%,0.25W	01121	CB1015
A13R3021	321-0241-00			RES.,FXD,FILM:3.16K OHM,1%,0.125W	91637	MFF1816G31600F
A13R3023	321-0293-00			RES.,FXD,FILM:11K OHM,1%,0.125W	91637	MFF1816G11001F
A13R3031	321-0673-00			RES.,FXD,FILM:17K OHM,0.5%,0.125W	91637	MFF1816D17001D
A13R3033	321-0724-03			RES.,FXD,FILM:13.6K OHM,0.25W,0.125W	24546	NC55C1362C
A13R3051	321-0193-00			RES.,FXD,FILM:1K OHM,1%,0.125W	91637	MFF1816G10000F
A13R3061	321-0373-00			RES.,FXD,FILM:75K OHM, 1%,0.125W	91637	MFF1816G75001F
A13R3063	321-0249-00			RES.,FXD,FILM:3.83K OHM,1%,0.125W	91637	MFF1816G38300F
A13R3081	321-0295-00			RES.,FXD,FILM:11.5K OHM,1%,0.125W	91637	MFF1816G11501F
A13R3091	321-0317-00			RES.,FXD,FILM:19.6K OHM,1%,0.125W	91637	MFF1816G19601F
A13R3093	321-0282-00			RES.,FXD,FILM:8.45K OHM,1%,0.125W	91637	MFF1816G84500F
A13R5013	315-0102-00			RES.,FXD,CMPSN:1K OHM,5%,0.25W	01121	CB1025
A13R5031	321-0926-07			RES.,FXD,FILM:4K OHM,0.1%,0.125W	91637	MFF1816C40000B
A13R5041	321-0929-07			RES.,FXD,FILM:2.5K OHM,0.10%,0.125W	91637	CMF55116C25000B
A13R5043	321-0222-07			RES.,FXD,FILM:2K OHM,0.1%,0.125W	91637	CMFF55116C20000B
A13R5045	321-0929-07			RES.,FXD,FILM:2.5K OHM,0.10%,0.125W	91637	CMF55116C25000B
A13R5061	315-0152-00			RES.,FXD,CMPSN:1.5K OHM,5%,0.25W	01121	CB1525
A13R5071	301-0242-00			RES.,FXD,CMPSN:2.4K OHM,5%,0.5W	01121	EB2425
A13R5073	315-0223-00			RES.,FXD,CMPSN:22K OHM,5%,0.25W	01121	CB2235
A13R5081	315-0332-00			RES.,FXD,CMPSN:3.3K OHM,5%,0.25W	01121	CB3325
A13R5083	315-0104-00			RES.,FXD,CMPSN:100K OHM,5%,0.25W	01121	CB1045
A13R5821	315-0102-00			RES.,FXD,CMPSN:1K OHM,5%,0.25W	01121	CB1025
A13R6031	321-0169-00			RES.,FXD,FILM:562 OHM,1%,0.125W	91637	MFF1816G562R0F
A13R6033	321-0215-00			RES.,FXD,FILM:1.69K OHM,1%,0.125W	91637	MFF1816G16900F
A13R6041	321-0192-00			RES.,FXD,FILM:976 OHM,1%,0.125W	91637	MFF1816G976R0F
A13R6043	321-0219-00			RES.,FXD,FILM:1.87K OHM,1%,0.125W	91637	MFF1816G18700F
A13R6061	321-0213-00			RES.,FXD,FILM:1.62K OHM,1%,0.125W	91637	MFF1816G16200F
A13R6063	321-0171-00			RES.,FXD,FILM:590 OHM,1%,0.125W	91637	MFF1816G590R0F
A13R7011	321-0216-00			RES.,FXD,FILM:1.74K OHM,1%,0.125W	91637	MFF1816G17400F
A13R7013	321-0237-00			RES.,FXD,FILM:2.87K OHM,1%,0.125W	91637	MFF1816G28700F
A13R7015	321-0237-00			RES.,FXD,FILM:2.87K OHM,1%,0.125W	91637	MFF1816G28700F
A13R8031	315-0102-00			RES.,FXD,CMPSN:1K OHM,5%,0.25W	01121	CB1025
A13R8051	315-0473-00			RES.,FXD,CMPSN:47K OHM,5%,0.25W	01121	CB4735
A13R8061	315-0102-00			RES.,FXD,CMPSN:1K OHM,5%,0.25W	01121	CB1025
A13U2041	307-0700-00			CPLR,OPTOELECTR:140 OHM,40MA	18178	VTL5C4
A13U3031	156-1191-00			MICROCIRCUIT,LI:BI-FET OPNL AMPL	01295	TL072ACP
A13U3041	156-1272-00			MICROCIRCUIT,LI:DUAL OPERATIONAL AMPLIFIER	18324	NE5532 FE-IIB
A13U3061	156-1272-00			MICROCIRCUIT,LI:DUAL OPERATIONAL AMPLIFIER	18324	NE5532 FE-IIB
A13U3081	156-1446-00			MICROCIRCUIT,LI:OPNL AMPL,DUAL	18324	NE5533N
A13U6041	156-1272-00			MICROCIRCUIT,LI:DUAL OPERATIONAL AMPLIFIER	18324	NE5532 FE-IIB
A13U6051	156-1272-00			MICROCIRCUIT,LI:DUAL OPERATIONAL AMPLIFIER	18324	NE5532 FE-IIB
A13U8051	156-0515-00			MICROCIRCUIT,DI:TRIPLE 3-CHAN MUX	80009	156-0515-00
A13VR8031	152-0127-00			SEMICOND DEVICE:ZENER,0.4W,7.5V,5%	04713	SZG35009K2
A13VR8033	152-0127-00			SEMICOND DEVICE:ZENER,0.4W,7.5V,5%	04713	SZG35009K2

Scan by Zenith

Component No.	Tektronix Part No.	Serial/Model No. Eff	Dscont	Name & Description	Mfr Code	Mfr Part Number
A14	670-7995-00			CKT BOARD ASSY:INPUT & NOTCH	80009	670-7995-00
A14C1010	290-0529-00			CAP.,FXD,ELCTLT:47UF,20%,20V	05397	T362C476M020AS
A14C1013	281-0820-00			CAP.,FXD,CER DI:680PF,10%,50V	05397	C114K681K1X5CA
A14C1020	290-0573-00			CAP.,FXD,ELCTLT:2.7UF,20%,50V	56289	196D275X0050JA1
A14C1021	290-0573-00			CAP.,FXD,ELCTLT:2.7UF,20%,50V	56289	196D275X0050JA1
A14C1030	290-0720-00			CAP.,FXD,ELCTLT:68UF,20%,15V	56289	196D686X0015PE3
A14C1031	283-0779-00			CAP.,FXD,MICA D:27PF,2%,500V	00853	D155E270G0
A14C1033	281-0775-00			CAP.,FXD,CER DI:0.1UF,20%,50V	04222	MA205E104MAA
A14C2010	290-0974-00			CAP.,FXD,ELCTLT:10UF,20%,50VDC	55680	ULB1H100MEA
A14C2011	290-0534-00			CAP.,FXD,ELCTLT:1UF,20%,35V	56289	196D105X0035HA1
A14C2012	290-0512-00			CAP.,FXD,ELCTLT:22UF,20%,15V	56289	196D226X0015KA1
A14C2014	281-0819-00			CAP.,FXD,CER DI:33PF,5%,50V	72982	8035BC0G330
A14C2020	290-0536-00			CAP.,FXD,ELCTLT:10UF,20%,25V	90201	TDC106M025FL
A14C2021	290-0718-00			CAP.,FXD,ELCTLT:22UF,20%,35V	56289	196D226X0035PE4
A14C2022	290-0718-00			CAP.,FXD,ELCTLT:22UF,20%,35V	56289	196D226X0035PE4
A14C2031	281-0775-00			CAP.,FXD,CER DI:0.1UF,20%,50V	04222	MA205E104MAA
A14C2032	290-0529-00			CAP.,FXD,ELCTLT:47UF,20%,20V	05397	T362C476M020AS
A14C2040	281-0759-00			CAP.,FXD,CER DI:22PF,10%,100V	96733	R2735
A14C2041	281-0763-00			CAP.,FXD,CER DI:47PF,10%,100V	04222	GA101A470KAA
A14C2050	283-0728-00			CAP.,FXD,MICA D:120PF,1%,500V	00853	D155F121F0
A14C2051	283-0642-00			CAP.,FXD,MICA D:33PF,+/-0.5PF,300V	00853	D10-5E330G
A14C2060	283-0672-00			CAP.,FXD,MICA D:200PF,1%,500V	00853	D155F2010F0
A14C2061	281-0096-00			CAP.,VAR,AIR DI:5.5-18PF,350V	59660	538-006-A5.5-18
A14C3014	281-0772-00			CAP.,FXD,CER DI:0.0047UF,10%,100V	04222	GC701C472K
A14C3021	281-0775-00			CAP.,FXD,CER DI:0.1UF,20%,50V	04222	MA205E104MAA
A14C3023	281-0775-00			CAP.,FXD,CER DI:0.1UF,20%,50V	04222	MA205E104MAA
A14C3031	285-1142-00			CAP.,FXD,PLSTC:0.01UF,1%,200VDC	19396	103F02PP580
A14C3032	285-1056-00			CAP.,FXD,PLSTC:1UF,2%,50V	14752	650B1A105G
A14C3033	285-1221-00			CAP.,FXD,MTLZD:0.1UF,2%,100V	14752	650D1B104G
A14C3040	290-0974-00			CAP.,FXD,ELCTLT:10UF,20%,50VDC	55680	ULB1H100MEA
A14C3041	285-1142-00			CAP.,FXD,PLSTC:0.01UF,1%,200VDC	19396	103F02PP580
A14C3042	285-1056-00			CAP.,FXD,PLSTC:1UF,2%,50V	14752	650B1A105G
A14C3044	285-1221-00			CAP.,FXD,MTLZD:0.1UF,2%,100V	14752	650D1B104G
A14C3045	290-0525-00			CAP.,FXD,ELCTLT:4.7UF,20%,50V	56289	196D475X0050KA1
A14C3050	283-0728-00			CAP.,FXD,MICA D:120PF,1%,500V	00853	D155F121F0
A14C3051	290-0920-00			CAP.,FXD,ELCTLT:33UF,+50-10%,35V	55680	ULB1V330TEAANA
A14C3060	283-0672-00			CAP.,FXD,MICA D:200PF,1%,500V	00853	D155F2010F0
A14C4010	290-0573-00			CAP.,FXD,ELCTLT:2.7UF,20%,50V	56289	196D275X0050JA1
A14C4020	290-0808-00			CAP.,FXD,ELCTLT:2.7UF,10%,20V	05397	T3228275K020AS
A14C4021	283-0168-00			CAP.,FXD,CER DI:12PF,5%,100V	72982	8101B121C0G0120J
A14C4022	281-0763-00			CAP.,FXD,CER DI:47PF,10%,100V	04222	GA101A470KAA
A14C4023	281-0819-00			CAP.,FXD,CER DI:33PF,5%,50V	72982	8035BC0G330
A14C4024	283-0631-00			CAP.,FXD,MICA D:95PF,1%,500V	00853	D155F950F0
A14C4031	283-0594-00			CAP.,FXD,MICA D:0.001UF,1%,100V	00853	D151F102F0
A14C4032	283-0594-00			CAP.,FXD,MICA D:0.001UF,1%,100V	00853	D151F102F0
A14C4041	281-0823-00			CAP.,FXD,CER DI:470PF,10%,50V	12969	CGB471KDN
A14C4051	281-0775-00			CAP.,FXD,CER DI:0.1UF,20%,50V	04222	MA205E104MAA
A14C4052	281-0759-00			CAP.,FXD,CER DI:22PF,10%,100V	96733	R2735
A14C4053	281-0819-00			CAP.,FXD,CER DI:33PF,5%,50V	72982	8035BC0G330
A14C4054	283-0680-00			CAP.,FXD,MICA D:330PF,1%,500V	00853	D155F331F0
A14C4055	283-0638-00			CAP.,FXD,MICA D:130PF,1%,100V	00853	D151F131F0
A14C4061	281-0759-00			CAP.,FXD,CER DI:22PF,10%,100V	96733	R2735
A14C4062	281-0819-00			CAP.,FXD,CER DI:33PF,5%,50V	72982	8035BC0G330

Scan by Zenith

Component No.	Tektronix Part No.	Serial/Model No. Eff	Dscont	Name & Description	Mfr Code	Mfr Part Number
A14C4063	281-0775-00			CAP.,FXD,CER DI:0.1UF,20%,50V	04222	MA205E104MAA
A14C4064	281-0823-00			CAP.,FXD,CER DI:470PF,10%,50V	12969	CGB471KDN
A14C4065	281-0775-00			CAP.,FXD,CER DI:0.1UF,20%,50V	04222	MA205E104MAA
A14C4070	285-1219-00			CAP.,FXD,MTLZD:1UF,5%,400V	14752	230D1E105J
A14C5020	290-0808-00			CAP.,FXD,ELCTLT:2.7UF,10%,20V	05397	T3228275K020AS
A14C5021	281-0812-00			CAP.,FXD,CER DI:1000PF,10%,100V	04222	MA101C102KAA
A14C5024	281-0823-00			CAP.,FXD,CER DI:470PF,10%,50V	12969	CGB471KDN
A14C5025	283-0186-00			CAP.,FXD,CER DI:27PF,5%,50V	59660	811A058C0G0270J
A14C5031	281-0823-00			CAP.,FXD,CER DI:470PF,10%,50V	12969	CGB471KDN
A14C5041	290-0512-00			CAP.,FXD,ELCTLT:22UF,20%,15V	56289	196D226X0015KA1
A14C5060	290-0525-00			CAP.,FXD,ELCTLT:4.7UF,20%,50V	56289	196D475X0050KA1
A14C5061	290-0573-00			CAP.,FXD,ELCTLT:2.7UF,20%,50V	56289	196D275X0050JA1
A14C5062	290-0534-00			CAP.,FXD,ELCTLT:1UF,20%,35V	56289	196D105X0035HA1
A14C5063	290-0512-00			CAP.,FXD,ELCTLT:22UF,20%,15V	56289	196D226X0015KA1
A14C5069	283-0220-00			CAP.,FXD,CER DI:0.01UF,20%,50V	72982	8121N075X7R0103M
A14C5070	285-1219-00			CAP.,FXD,MTLZD:1UF,5%,400V	14752	230D1E105J
A14CR1010	152-0141-02			SEMICOND DEVICE:SILICON,30V,150MA	01295	1N4152R
A14CR1011	152-0141-02			SEMICOND DEVICE:SILICON,30V,150MA	01295	1N4152R
A14CR1060	152-0141-02			SEMICOND DEVICE:SILICON,30V,150MA	01295	1N4152R
A14CR1061	152-0141-02			SEMICOND DEVICE:SILICON,30V,150MA	01295	1N4152R
A14CR1070	152-0141-02			SEMICOND DEVICE:SILICON,30V,150MA	01295	1N4152R
A14CR2020	152-0246-00			SEMICOND DEVICE:SW,SI,40V,200MA	03508	DE140
A14CR2021	152-0246-00			SEMICOND DEVICE:SW,SI,40V,200MA	03508	DE140
A14CR2024	152-0322-00			SEMICOND DEVICE:SILICON,15V,HOT CARRIER	50434	5082-2672
A14CR2025	152-0322-00			SEMICOND DEVICE:SILICON,15V,HOT CARRIER	50434	5082-2672
A14CR2041	152-0141-02			SEMICOND DEVICE:SILICON,30V,150MA	01295	1N4152R
A14CR4041	152-0322-00			SEMICOND DEVICE:SILICON,15V,HOT CARRIER	50434	5082-2672
A14CR4042	152-0322-00			SEMICOND DEVICE:SILICON,15V,HOT CARRIER	50434	5082-2672
A14CR4051	152-0322-00			SEMICOND DEVICE:SILICON,15V,HOT CARRIER	50434	5082-2672
A14CR4052	152-0322-00			SEMICOND DEVICE:SILICON,15V,HOT CARRIER	50434	5082-2672
A14CR4072	152-0066-00			SEMICOND DEVICE:SILICON,400V,750MA	14433	LG4016
A14CR4073	152-0066-00			SEMICOND DEVICE:SILICON,400V,750MA	14433	LG4016
A14CR4074	152-0066-00			SEMICOND DEVICE:SILICON,400V,750MA	14433	LG4016
A14CR4075	152-0066-00			SEMICOND DEVICE:SILICON,400V,750MA	14433	LG4016
A14CR5025	152-0141-02			SEMICOND DEVICE:SILICON,30V,150MA	01295	1N4152R
A14CR5061	152-0141-02			SEMICOND DEVICE:SILICON,30V,150MA	01295	1N4152R
A14DS3050	150-0131-00			LAMP,INCAND:120V,0.025A	71744	120PS
A14DS3060	150-0131-00			LAMP,INCAND:120V,0.025A	71744	120PS
A14J1030	131-0608-00			TERMINAL,PIN:0.365 L X 0.025 PH BRZ GOLD	22526	47357
A14J1041	131-0608-00			TERMINAL,PIN:0.365 L X 0.025 PH BRZ GOLD	22526	47357
A14J1042	131-2132-01			CONN,RCPT,ELEC:HEADER,1 X 36,01 CTR	22526	65506-436
A14J1043	131-2132-01			CONN,RCPT,ELEC:HEADER,1 X 36,01 CTR	22526	65506-436
A14J1060	131-0608-00			TERMINAL,PIN:0.365 L X 0.025 PH BRZ GOLD	22526	47357
A14J1070	131-2132-01			CONN,RCPT,ELEC:HEADER,1 X 36,01 CTR	22526	65506-436
A14J1071	131-0608-00			TERMINAL,PIN:0.365 L X 0.025 PH BRZ GOLD	22526	47357
A14J4040	131-2132-01			CONN,RCPT,ELEC:HEADER,1 X 36,01 CTR	22526	65506-436
A14J4070	131-0589-00			TERMINAL,PIN:0.46 L X 0.025 SQ	22526	48283-029
A14K2050	148-0122-00			RELAY,REED:FORM A,5A,200VDC,COIL 5VDC	95348	F81-1050-4
A14K2051	148-0122-00			RELAY,REED:FORM A,5A,200VDC,COIL 5VDC	95348	F81-1050-4
A14K2052	148-0134-00			RELAY,REED:2 FORM A,5VDC COIL,100MA AT	21317	2A05X250BIAA
A14K2060	148-0134-00			RELAY,REED:2 FORM A,5VDC COIL,100MA AT	21317	2A05X250BIAA
A14K2061	148-0134-00			RELAY,REED:2 FORM A,5VDC COIL,100MA AT	21317	2A05X250BIAA
A14K2070	148-0134-00			RELAY,REED:2 FORM A,5VDC COIL,100MA AT	21317	2A05X250BIAA
A14K2071	148-0134-00			RELAY,REED:2 FORM A,5VDC COIL,100MA AT	21317	2A05X250BIAA

Scan by Zenith

Component No.	Tektronix Part No.	Serial/Model No. Eff	Dscont	Name & Description	Mfr Code	Mfr Part Number
A14K4030	148-0079-00			RELAY,REED:200 OHM,5V	24211	GB-832A-20
A14K4031	148-0079-00			RELAY,REED:200 OHM,5V	24211	GB-832A-20
A14K4032	148-0079-00			RELAY,REED:200 OHM,5V	24211	GB-832A-20
A14K5030	148-0079-00			RELAY,REED:200 OHM,5V	24211	GB-832A-20
A14Q1031	151-0220-00			TRANSISTOR:SILICON,PNP	07263	S036228
A14Q1070	151-0190-00			TRANSISTOR:SILICON,NPN	07263	S032677
A14Q2010	151-0220-00			TRANSISTOR:SILICON,PNP	07263	S036228
A14Q2011	151-1021-00			TRANSISTOR:SILICON,JFE	17856	FN815
A14Q2012	151-1025-00			TRANSISTOR:SILICON,JFE,N-CHANNEL	01295	SFB8129
A14Q2021	151-0190-00			TRANSISTOR:SILICON,NPN	07263	S032677
A14Q2023	151-1025-00			TRANSISTOR:SILICON,JFE,N-CHANNEL	01295	SFB8129
A14Q2024	151-0190-00			TRANSISTOR:SILICON,NPN	07263	S032677
A14Q2041	151-1059-00			TRANSISTOR:SILICON,FE,N-CHANNEL	80009	151-1059-00
A14Q2042	151-1059-00			TRANSISTOR:SILICON,FE,N-CHANNEL	80009	151-1059-00
A14Q4060	151-0198-00			TRANSISTOR:SILICON,NPN,SEL FROM MPS918	04713	SPS8802-1
A14Q4061	151-0198-00			TRANSISTOR:SILICON,NPN,SEL FROM MPS918	04713	SPS8802-1
A14Q4070	151-0198-00			TRANSISTOR:SILICON,NPN,SEL FROM MPS918	04713	SPS8802-1
A14Q4071	151-0198-00			TRANSISTOR:SILICON,NPN,SEL FROM MPS918	04713	SPS8802-1
A14Q5071	151-0342-00			TRANSISTOR:SILICON,PNP	07263	S035928
A14R1010	315-0204-00			RES.,FXD,CMPSN:200K OHM,5%,0.25W	01121	CB2045
A14R1011	315-0274-00			RES.,FXD,CMPSN:270K OHM,5%,0.25W	01121	CB2745
A14R1012	315-0243-00			RES.,FXD,CMPSN:24K OHM,5%,0.25W	01121	CB2435
A14R1013	315-0683-00			RES.,FXD,CMPSN:68K OHM,5%,0.25W	01121	CB6835
A14R1020	315-0103-00			RES.,FXD,CMPSN:10K OHM,5%,0.25W	01121	CB1035
A14R1021	315-0103-00			RES.,FXD,CMPSN:10K OHM,5%,0.25W	01121	CB1035
A14R1022	315-0333-00			RES.,FXD,CMPSN:33K OHM,5%,0.25W	01121	CB3335
A14R1023	311-1240-00			RES.,VAR,NONWIR:25K OHM,10%,0.50W	73138	72-30-0
A14R1024	315-0473-00			RES.,FXD,CMPSN:47K OHM,5%,0.25W	01121	CB4735
A14R1025	315-0510-00			RES.,FXD,CMPSN:51 OHM,5%,0.25W	01121	CB5105
A14R1026	315-0473-00			RES.,FXD,CMPSN:47K OHM,5%,0.25W	01121	CB4735
A14R1027	315-0510-00			RES.,FXD,CMPSN:51 OHM,5%,0.25W	01121	CB5105
A14R1030	311-1240-00			RES.,VAR,NONWIR:25K OHM,10%,0.50W	73138	72-30-0
A14R1031	321-0754-07			RES.,FXD,FILM:900 OHM,0.1%,0.125W	91637	MFF1816C900R0B
A14R1032	321-0991-03			RES.,FXD,FILM:18K OHM,0.25%,0.125W	24546	NC55C1802C
A14R1033	315-0102-00			RES.,FXD,CMPSN:1K OHM,5%,0.25W	01121	CB1025
A14R1034	315-0103-00			RES.,FXD,CMPSN:10K OHM,5%,0.25W	01121	CB1035
A14R1035	315-0104-00			RES.,FXD,CMPSN:100K OHM,5%,0.25W	01121	CB1045
A14R1036	315-0104-00			RES.,FXD,CMPSN:100K OHM,5%,0.25W	01121	CB1045
A14R1040	315-0104-00			RES.,FXD,CMPSN:100K OHM,5%,0.25W	01121	CB1045
A14R1041	315-0104-00			RES.,FXD,CMPSN:100K OHM,5%,0.25W	01121	CB1045
A14R1042	315-0103-00			RES.,FXD,CMPSN:10K OHM,5%,0.25W	01121	CB1035
A14R1043	315-0103-00			RES.,FXD,CMPSN:10K OHM,5%,0.25W	01121	CB1035
A14R1044	315-0162-00			RES.,FXD,CMPSN:1.6K OHM,5%,0.25W	01121	CB1625
A14R1050	311-1240-00			RES.,VAR,NONWIR:25K OHM,10%,0.50W	73138	72-30-0
A14R1051	311-1240-00			RES.,VAR,NONWIR:25K OHM,10%,0.50W	73138	72-30-0
A14R1052	315-0223-00			RES.,FXD,CMPSN:22K OHM,5%,0.25W	01121	CB2235
A14R1053	315-0104-00			RES.,FXD,CMPSN:100K OHM,5%,0.25W	01121	CB1045
A14R1062	315-0513-00			RES.,FXD,CMPSN:51K OHM,5%,0.25W	01121	CB5135
A14R1070	315-0243-00			RES.,FXD,CMPSN:24K OHM,5%,0.25W	01121	CB2435
A14R1071	315-0203-00			RES.,FXD,CMPSN:20K OHM,5%,0.25W	01121	CB2035
A14R1072	315-0332-00			RES.,FXD,CMPSN:3.3K OHM,5%,0.25W	01121	CB3325
A14R1073	315-0163-00			RES.,FXD,CMPSN:16K OHM,5%,0.25W	01121	CB1635
A14R1074	315-0163-00			RES.,FXD,CMPSN:16K OHM,5%,0.25W	01121	CB1635
A14R1075	315-0203-00			RES.,FXD,CMPSN:20K OHM,5%,0.25W	01121	CB2035

Scan by Zenith

Component No.	Tektronix Part No.	Serial/Model No. Eff	Dscont	Name & Description	Mfr Code	Mfr Part Number
A14R1076	315-0472-00			RES.,FXD,CMPSN:4.7K OHM,5%,0.25W	01121	CB4725
A14R1077	315-0123-00			RES.,FXD,CMPSN:12K OHM,5%,0.25W	01121	CB1235
A14R2010	315-0103-00			RES.,FXD,CMPSN:10K OHM,5%,0.25W	01121	CB1035
A14R2011	315-0103-00			RES.,FXD,CMPSN:10K OHM,5%,0.25W	01121	CB1035
A14R2013	315-0393-00			RES.,FXD,CMPSN:39K OHM,5%,0.25W	01121	CB3935
A14R2014	315-0332-00			RES.,FXD,CMPSN:3.3K OHM,5%,0.25W	01121	CB3325
A14R2015	315-0243-00			RES.,FXD,CMPSN:24K OHM,5%,0.25W	01121	CB2435
A14R2016	315-0226-00			RES.,FXD,CMPSN:22M OHM,5%,0.25W	01121	CB2265
A14R2017	315-0332-00			RES.,FXD,CMPSN:3.3K OHM,5%,0.25W	01121	CB3325
A14R2018	315-0182-00			RES.,FXD,CMPSN:1.8K OHM,5%,0.25W	01121	CB1825
A14R2020	315-0242-00			RES.,FXD,CMPSN:2.4K OHM,5%,0.25W	01121	CB2425
A14R2022	315-0182-00			RES.,FXD,CMPSN:1.8K OHM,5%,0.25W	01121	CB1825
A14R2023	315-0332-00			RES.,FXD,CMPSN:3.3K OHM,5%,0.25W	01121	CB3325
A14R2024	315-0104-00			RES.,FXD,CMPSN:100K OHM,5%,0.25W	01121	CB1045
A14R2025	315-0561-00			RES.,FXD,CMPSN:560 OHM,5%,0.25W	01121	CB5615
A14R2026	315-0103-00			RES.,FXD,CMPSN:10K OHM,5%,0.25W	01121	CB1035
A14R2030	321-0774-03			RES.,FXD,FILM:4.5K OHM,0.25%,0.125W	91637	MFF1816D45000C
A14R2031	321-0612-03			RES.,FXD,FILM:500 OHM,0.25%,0.125W	91637	MFF1816D500R0C
A14R2032	321-1600-07			RES.,FXD,FILM:1.851K OHM,0.1%,0.125W	24546	NE55E18150B
A14R2033	321-0926-07			RES.,FXD,FILM:4K OHM,0.1%,0.125W	91637	MFF1816C40000B
A14R2034	315-0105-00			RES.,FXD,CMPSN:1M OHM,5%,0.25W	01121	CB1055
A14R2035	315-0361-00			RES.,FXD,CMPSN:360 OHM,5%,0.25W	01121	CB3615
A14R2036	321-0771-03			RES.,FXD,FILM:50 OHM,0.25%,0.125W	91637	MFF1816D50R00C
A14R2037	321-0749-06			RES.,FXD,FILM:450 OHM,0.25%,0.125W	91637	MFF1816C450R0C
A14R2041	321-0774-03			RES.,FXD,FILM:4.5K OHM,0.25%,0.125W	91637	MFF1816D45000C
A14R2042	315-0511-00			RES.,FXD,CMPSN:510 OHM,5%,0.25W	01121	CB5115
A14R2051	321-0409-00			RES.,FXD,FILM:178K OHM,1%,0.125W	91637	MFF1816G17802F
A14R2052	307-0684-00			RES NTWK,FXD,FI:INPUT ATTENUATOR	80009	307-0684-00
A14R3010	315-0102-00			RES.,FXD,CMPSN:1K OHM,5%,0.25W	01121	CB1025
A14R3011	315-0303-00			RES.,FXD,CMPSN:30K OHM,5%,0.25W	01121	CB3035
A14R3012	315-0272-00			RES.,FXD,CMPSN:2.7K OHM,5%,0.25W	01121	CB2725
A14R3013	315-0105-00			RES.,FXD,CMPSN:1M OHM,5%,0.25W	01121	CB1055
A14R3014	315-0201-00			RES.,FXD,CMPSN:200 OHM,5%,0.25W	01121	CB2015
A14R3015	315-0102-00			RES.,FXD,CMPSN:1K OHM,5%,0.25W	01121	CB1025
A14R3017	315-0510-00			RES.,FXD,CMPSN:51 OHM,5%,0.25W	01121	CB5105
A14R3020	315-0202-00			RES.,FXD,CMPSN:2K OHM,5%,0.25W	01121	CB2025
A14R3021	315-0103-00			RES.,FXD,CMPSN:10K OHM,5%,0.25W	01121	CB1035
A14R3022	321-0202-00			RES.,FXD,FILM:1.24K OHM,1%,0.125W	91637	MFF1816G12400F
A14R3023	315-0301-00			RES.,FXD,CMPSN:300 OHM,5%,0.25W	01121	CB3015
A14R3024	301-0431-00			RES.,FXD,CMPSN:430 OHM,5%,0.5W	01121	EB4315
A14R3025	315-0433-00			RES.,FXD,CMPSN:43K OHM,5%,0.25W	01121	CB4335
A14R3026	315-0153-00			RES.,FXD,CMPSN:15K OHM,5%,0.25W	01121	CB1535
A14R3030	315-0361-00			RES.,FXD,CMPSN:360 OHM,5%,0.25W	01121	CB3615
A14R3041	315-0331-00			RES.,FXD,CMPSN:330 OHM,5%,0.25W	01121	CB3315
A14R3042	315-0182-00			RES.,FXD,CMPSN:1.8K OHM,5%,0.25W	01121	CB1825
A14R3043	321-0238-00			RES.,FXD,FILM:2.94K OHM,1%,0.125W	91637	MFF1816G29400F
A14R3044	315-0105-00			RES.,FXD,CMPSN:1M OHM,5%,0.25W	01121	CB1055
A14R4010	307-0700-00			CPLR,OPTOELECTR:140 OHM,40MA	18178	VTL5C4
A14R4010	315-0751-00			RES.,FXD,CMPSN:750 OHM,5%,0.25W	01121	CB7515
A14R4011	307-0700-00			CPLR,OPTOELECTR:140 OHM,40MA	18178	VTL5C4
A14R4011	315-0201-00			RES.,FXD,CMPSN:200 OHM,5%,0.25W	01121	CB2015
A14R4012	315-0391-00			RES.,FXD,CMPSN:390 OHM,5%,0.25W	01121	CB3915
A14R4015	321-0222-07			RES.,FXD,FILM:2K OHM,0.1%,0.125W	91637	CMFF55116C20000B
A14R4020	321-0259-03			RES.,FXD,FILM:4.87K OHM,0.25%,0.125W	91637	MFF1816D48700C

Scan by Zenith

Component No.	Tektronix Part No.	Serial/Model No. Eff	Dscont	Name & Description	Mfr Code	Mfr Part Number
A14R4021	315-0222-00			RES.,FXD,CMPSN:2.2K OHM,5%,0.25W	01121	CB2225
A14R4022	321-0299-00			RES.,FXD,FILM:12.7K OHM,1%,0.125W	91637	MFF1816G12701F
A14R4023	321-1617-06			RES.,FXD,FILM:5.85K OHM,0.25%,0.125W	91637	MFF1816C58500C
A14R4024	321-0229-00			RES.,FXD,FILM:2.37K OHM,1%,0.125W	91637	MFF1816G23700F
A14R4025	321-0174-00			RES.,FXD,FILM:634 OHM,1%,0.125W	91637	MFF1816G634R0F
A14R4026	315-0101-00			RES.,FXD,CMPSN:100 OHM<5%,0.25W	01121	CB1015
A14R4027	315-0101-00			RES.,FXD,CMPSN:100 OHM<5%,0.25W	01121	CB1015
A14R4031	321-0336-00			RES.,FXD,FILM:30.9K OHM,1%,0.125W	91637	CMF55116G30901F
A14R4032	321-0368-00			RES.,FXD,FILM:66.5K OHM,1%,0.125W	91637	MFF1816G66501F
A14R4040	321-0322-00			RES.,FXD,FILM:22.1K OHM,1%,0.125W	91637	MFF1816G22101F
A14R4041	321-0260-00			RES.,FXD,FILM:4.99K OHM,1%,0.125W	91637	MFF1816G49900F
A14R4042	315-0225-00			RES.,FXD,CMPSN:2.2M OHM,5%,0.25W	01121	CB2255
A14R4050	321-0289-00			RES.,FXD,FILM:10K OHM,1%,0.125W	91637	MFF1816G10001F
A14R4051	321-0289-00			RES.,FXD,FILM:10K OHM,1%,0.125W	91637	MFF1816G10001F
A14R4052	321-0289-00			RES.,FXD,FILM:10K OHM,1%,0.125W	91637	MFF1816G10001F
A14R4053	321-0249-07			RES.,FXD,FILM:3.83K OHM,0.1%,0.125W	24546	NE55E383
A14R4054	321-0286-00			RES.,FXD,FILM:9.31K OHM,1%,0.125W	91637	MFF1816G93100F
A14R4055	321-0183-00			RES.,FXD,FILM:787 OHM,1%,0.125W	91637	MFF1816G787R0F
A14R4056	307-0683-00			RES NTWK,FXD,FI:GAIN SET	80009	307-0683-00
A14R4061	315-0270-00			RES.,FXD,CMPSN:27 OHM,5%,0.25W	01121	CB2705
A14R4062	315-0164-00			RES.,FXD,CMPSN:160K OHM,5%,0.25W	01121	CB1645
A14R4071	315-0102-00			RES.,FXD,CMPSN:1K OHM,5%,0.25W	01121	CB1025
A14R4072	315-0102-00			RES.,FXD,CMPSN:1K OHM,5%,0.25W	01121	CB1025
A14R4073	315-0470-00			RES.,FXD,CMPSN:47 OHM,5%,0.25W	01121	CB4705
A14R4074	315-0470-00			RES.,FXD,CMPSN:47 OHM,5%,0.25W	01121	CB4705
A14R5010	307-0700-00			CPLR,OPTOELECTR:140 OHM,40MA	18178	VTL5C4
A14R5011	315-0392-00			RES.,FXD,CMPSN:3.9K OHM,5%,0.25W	01121	CB3925
A14R5012	315-0392-00			RES.,FXD,CMPSN:3.9K OHM,5%,0.25W	01121	CB3925
A14R5020	321-0119-00			RES.,FXD,FILM:169 OHM,1%,0.125W	91637	MFF1816G169R0F
A14R5021	315-0270-00			RES.,FXD,CMPSN:27 OHM,5%,0.25W	01121	CB2705
A14R5022	315-0270-00			RES.,FXD,CMPSN:27 OHM,5%,0.25W	01121	CB2705
A14R5024	315-0222-00			RES.,FXD,CMPSN:2.2K OHM,5%,0.25W	01121	CB2225
A14R5025	311-1238-00			RES.,VAR,NONWIR:5K OHM,10%,0.50W	73138	72-27-0
A14R5031	315-0431-00			RES.,FXD,CMPSN:430 OHM,5%,0.25W	01121	CB4315
A14R5032	315-0221-00			RES.,FXD,CMPSN:220 OHM,5%,0.25W	01121	CB2215
A14R5033	321-0136-00			RES.,FXD,FILM:255 OHM,1%,0.125W	91637	MFF1816G255R0F
A14R5034	321-0197-00			RES.,FXD,FILM:1.1K OHM,1%,0.125W	91637	MFF1816G11000F
A14R5035	321-0099-00			RES.,FXD,FILM:105 OHM,1%,0.125W	91637	MFF1816G105R0F
A14R5041	307-0700-00			CPLR,OPTOELECTR:140 OHM,40MA	18178	VTL5C4
A14R5041	321-0416-00			RES.,FXD,FILM:210K OHM,1%,0.125W	91637	MFF1816G21002F
A14R5042	321-0239-00			RES.,FXD,FILM:3.01K OHM,1%,0.125W	91637	MFF1816G30100F
A14R5043	321-0318-00			RES.,FXD,FILM:20K OHM,1%,0.125W	91637	MFF1816G20001F
A14R5044	321-0289-00			RES.,FXD,FILM:10K OHM,1%,0.125W	91637	MFF1816G10001F
A14R5045	321-0239-00			RES.,FXD,FILM:3.01K OHM,1%,0.125W	91637	MFF1816G30100F
A14R5046	315-0270-00			RES.,FXD,CMPSN:27 OHM,5%,0.25W	01121	CB2705
A14R5051	307-0700-00			CPLR,OPTOELECTR:140 OHM,40MA	18178	VTL5C4
A14R5051	315-0151-00			RES.,FXD,CMPSN:150 OHM,5%,0.25W	01121	CB1515
A14R5052	315-0201-00			RES.,FXD,CMPSN:200 OHM,5%,0.25W	01121	CB2015
A14R5061	315-0151-00			RES.,FXD,CMPSN:150 OHM,5%,0.25W	01121	CB1515
A14R5062	315-0132-00			RES.,FXD,CMPSN:1.3K OHM,5%,0.25W	01121	CB1325
A14R5063	315-0273-00			RES.,FXD,CMPSN:27K OHM,5%,0.25W	01121	CB2735
A14R5064	315-0223-00			RES.,FXD,CMPSN:22K OHM,5%,0.25W	01121	CB2235
A14R5065	315-0202-00			RES.,FXD,CMPSN:2K OHM,5%,0.25W	01121	CB2025
A14R5066	315-0134-00			RES.,FXD,CMPSN:130K OHM,5%,0.25W	01121	CB1345

Scan by Zenith

Component No.	Tektronix Part No.	Serial/Model No. Eff	Dscont	Name & Description	Mfr Code	Mfr Part Number
A14RT5010	307-0124-00			RES.,THERMAL:5K OHM,10%	50157	1D1618
A14S2070	260-1998-00			SWITCH,PUSH:4 BUTTON,2 & 4 POLE	71590	2KBM0400001303
A14TP1030	214-0579-00			TERM,TEST POINT:BRS CD PL	80009	214-0579-00
A14U1010	156-0515-00			MICROCIRCUIT,DI:TRIPLE 3-CHAN MUX	80009	156-0515-00
A14U1011	156-1191-00			MICROCIRCUIT,LI:BI-FET OPNL AMPL	01295	TL072ACP
A14U1020	156-1191-00			MICROCIRCUIT,LI:BI-FET OPNL AMPL	01295	TL072ACP
A14U1050	156-1245-00			MICROCIRCUIT,LI:7 XSTR,HV/HIGH CUR	04713	MC1413PDS
A14U1060	156-1810-00			MICROCIRCUIT,LI:BIPOLAY,PERIPHERAL DRIVER	04713	MC1416P
A14U1070	156-1225-01			MICROCIRCUIT,LI:DUAL COMPARATOR,SCREENED	27014	LM393N/A+
A14U1072	156-1191-00			MICROCIRCUIT,LI:BI-FET OPNL AMPL	01295	TL072ACP
A14U2020	156-1191-00			MICROCIRCUIT,LI:BI-FET OPNL AMPL	01295	TL072ACP
A14U2030	156-1446-00			MICROCIRCUIT,LI:OPNL AMPL,DUAL	18324	NE5533N
A14U2031	156-0514-00			MICROCIRCUIT,DI:DIFF 4-CHAN MUX	80009	156-0514-00
A14U2040	156-0513-00			MICROCIRCUIT,DI:8-CHAN MUX	80009	156-0513-00
A14U2041	156-1338-00			MICROCIRCUIT,LI:OPERATIONAL AMPLIFIER	18324	NE5534N
A14U3010	156-1272-00			MICROCIRCUIT,LI:DUAL OPERATIONAL AMPLIFIER	18324	NE5532 FE-IIB
A14U3020	156-1272-00			MICROCIRCUIT,LI:DUAL OPERATIONAL AMPLIFIER	18324	NE5532 FE-IIB
A14U4020	156-1338-00			MICROCIRCUIT,LI:OPERATIONAL AMPLIFIER	18324	NE5534N
A14U4021	156-1446-01			MICROCIRCUIT,LI:OPERATIONAL AMP,SCREENED	18324	NE5533AN
A14U4041	156-0742-00			MICROCIRCUIT,LI:OPERATIONAL AMPLIFIER	27014	LM318N
A14U4042	156-1191-00			MICROCIRCUIT,LI:BI-FET OPNL AMPL	01295	TL072ACP
A14U4050	156-1446-01			MICROCIRCUIT,LI:OPERATIONAL AMP,SCREENED	18324	NE5533AN
A14U4051	156-1338-01			MICROCIRCUIT,LI:OPNL AMPL,SELECTED	18324	NE5534AN
A14U4061	156-1338-01			MICROCIRCUIT,LI:OPNL AMPL,SELECTED	18324	NE5534AN
A14U4062	156-0158-00			MICROCIRCUIT,LI:DUAL OPERATIONAL AMPLIFIER	18324	MC1458N
A14VR2022	152-0688-00			SEMICOND DEVICE:ZENER,2.4V,5%,0.4W	04713	1N4370A
A14VR2023	152-0688-00			SEMICOND DEVICE:ZENER,2.4V,5%,0.4W	04713	1N4370A
A14VR2031	152-0127-00			SEMICOND DEVICE:ZENER,0.4W,7.5V,5%	04713	SZG35009K2
A14VR3030	152-0127-00			SEMICOND DEVICE:ZENER,0.4W,7.5V,5%	04713	SZG35009K2
A14VR3041	152-0647-00			SEMICOND DEVICE:ZENER,0.4W,6.8V,5%	04713	SZG35014K3RL
A14VR4010	152-0395-00			SEMICOND DEVICE:ZENER,0.4W,4.3V,5%	14552	TD332317
A14VR4070	152-0149-00			SEMICOND DEVICE:ZENER,0.4W,10V,5%	04713	SZG35009K3
A14VR4071	152-0149-00			SEMICOND DEVICE:ZENER,0.4W,10V,5%	04713	SZG35009K3
A14VR5051	152-0395-00			SEMICOND DEVICE:ZENER,0.4W,4.3V,5%	14552	TD332317

Scan by Zenith

Component No.	Tektronix Part No.	Serial/Model No. Eff	Dscont	Name & Description	Mfr Code	Mfr Part Number
A15	670-7996-00			CKT BOARD ASSY:MAIN	80009	670-7996-00
A15	----- -----			(STANDARD ONLY)		
A15	670-8319-00			CKT BOARD ASSY:MAIN	80009	670-8319-00
A15	----- -----			(OPTION 02 ONLY)		
A15C1010	281-0775-00			CAP.,FXD,CER DI:0.1UF,20%,50V	04222	MA205E104MAA
A15C1020	290-0974-00			CAP.,FXD,ELCTLT:10UF,20%,50VDC	55680	ULB1H100MEA
A15C1021	283-0635-00			CAP.,FXD,MICA D:51PF,1%,100V	00853	D151E510F0
A15C1021	----- -----			(STANDARD ONLY)		
A15C1021	283-0636-00			CAP.,FXD,MICA D:36PF,1.4%,100V	00853	D155E360G0
A15C1021	----- -----			(OPTION 02 ONLY)		
A15C1022	283-0730-00			CAP.,FXD,MICA D:274PF,1%,500V	00853	D155F1250F0
A15C1023	290-0846-00			CAP.,FXD,ELCTLT:47UF,-10+75%,35 WVDC	54473	ECE-A35V47LU
A15C1023	----- -----			(OPTION 02 ONLY)		
A15C1030	281-0797-00			CAP.,FXD,CER DI:15PF,10%,100V	72982	8035D9AADC0G150K
A15C1030	----- -----			(STANDARD ONLY)		
A15C1040	290-0517-00			CAP.,FXD,ELCTLT:6.8UF,20%,35V	56289	196D685X0035KA1
A15C1040	----- -----			(STANDARD ONLY)		
A15C1041	281-0111-00			CAP.,VAR,AIR DI:2-27PF,650V	74970	193-8-5
A15C1041	----- -----			(STANDARD ONLY)		
A15C1041	283-0775-00			CAP.,FXD,MICA D:1764 PF,1%,500V	00853	D19-5F17640F0
A15C1041	----- -----			(OPTION 02 ONLY)		
A15C1042	290-0974-00			CAP.,FXD,ELCTLT:10UF,20%,50VDC	55680	ULB1H100MEA
A15C1042	----- -----			(OPTION 02 ONLY)		
A15C1050	285-1050-00			CAP.,FXD,PLSTC:0.1UF,1%,200V	14752	230B1C104F
A15C1060	283-0594-00			CAP.,FXD,MICA D:0.001UF,1%,100V	00853	D151F102F0
A15C2030	290-0974-00			CAP.,FXD,ELCTLT:10UF,20%,50VDC	55680	ULB1H100MEA
A15C2031	290-0517-00			CAP.,FXD,ELCTLT:6.8UF,20%,35V	56289	196D685X0035KA1
A15C2031	----- -----			(STANDARD ONLY)		
A15C2031	281-0797-00			CAP.,FXD,CER DI:15PF,10%,100V	72982	8035D9AADC0G150K
A15C2031	----- -----			(OPTION 02 ONLY)		
A15C2032	290-0517-00			CAP.,FXD,ELCTLT:6.8UF,20%,35V	56289	196D685X0035KA1
A15C2032	----- -----			(STANDARD ONLY)		
A15C2032	283-0696-00			CAP.,FXD,MICA D:2300PF,1%,500V	00853	D195F232F0
A15C2032	----- -----			(OPTION 02 ONLY)		
A15C2033	283-0193-00			CAP.,FXD,CER DI:510PF,2%,100V	51642	200-100-NP0-511G
A15C2033	----- -----			(OPTION 02 ONLY)		
A15C2040	283-0696-00			CAP.,FXD,MICA D:2300PF,1%,500V	00853	D195F232F0
A15C2040	----- -----			(OPTION 02 ONLY)		
A15C2041	283-0696-00			CAP.,FXD,MICA D:2300PF,1%,500V	00853	D195F232F0
A15C2041	----- -----			(OPTION 02 ONLY)		
A15C2042	283-0696-00			CAP.,FXD,MICA D:2300PF,1%,500V	00853	D195F232F0
A15C2042	----- -----			(OPTION 02 ONLY)		
A15C2050	285-1049-00			CAP.,FXD,PLSTC:0.01UF,1%,200V	14752	230B1C103F
A15C2051	283-0594-00			CAP.,FXD,MICA D:0.001UF,1%,100V	00853	D151F102F0
A15C2061	290-0974-00			CAP.,FXD,ELCTLT:10UF,20%,50VDC	55680	ULB1H100MEA
A15C3010	281-0775-00			CAP.,FXD,CER DI:0.1UF,20%,50V	04222	MA205E104MAA
A15C3021	283-0639-00			CAP.,FXD,MICA D:56PF,1%,100V	00853	D151E560F0
A15C3021	----- -----			(STANDARD ONLY)		
A15C3021	283-0635-00			CAP.,FXD,MICA D:51PF,1%,100V	00853	D151E510F0
A15C3021	----- -----			(OPTION 02 ONLY)		
A15C3022	283-0596-00			CAP.,FXD,MICA D:528PF,1%,300V	00853	D153F5280F0
A15C3031	290-0808-00			CAP.,FXD,ELCTLT:2.7UF,10%,20V	05397	T3228275K020AS
A15C3032	290-0808-00			CAP.,FXD,ELCTLT:2.7UF,10%,20V	05397	T3228275K020AS

Scan by Zenith

Component No.	Tektronix Part No.	Serial/Model No. Eff	Dscont	Name & Description	Mfr Code	Mfr Part Number
A15C3033	283-0629-00			CAP.,FXD,MICA D:62PF,1%,500V	00853	D105E620F0
A15C3033	----- -----			(STANDARD ONLY)		
A15C3034	283-0620-00			CAP.,FXD,MICA D:470PF,1%,300V	00853	D155F4771FO
A15C3035	283-0623-00			CAP.,FXD,MICA D:1200PF,1%,100V	00853	D195F122F0
A15C3036	290-0974-00			CAP.,FXD,ELCTLT:10UF,20%,50VDC	55680	ULB1H100MEA
A15C3037	281-0775-00			CAP.,FXD,CER DI:0.1UF,20%,50V	04222	MA205E104MAA
A15C3038	281-0775-00			CAP.,FXD,CER DI:0.1UF,20%,50V	04222	MA205E104MAA
A15C3038	----- -----			(STANDARD ONLY)		
A15C3038	290-0891-00			CAP.,FXD,ELCTLT:1UF,+75-10%,50V	55680	ULA1H010TEA
A15C3038	----- -----			(OPTION 02 ONLY)		
A15C3040	290-0534-00			CAP.,FXD,ELCTLT:1UF,20%,35V	56289	196D105X0035HA1
A15C3041	281-0775-00			CAP.,FXD,CER DI:0.1UF,20%,50V	04222	MA205E104MAA
A15C3042	290-0974-00			CAP.,FXD,ELCTLT:10UF,20%,50VDC	55680	ULB1H100MEA
A15C3043	290-0782-00			CAP.,FXD,ELCTLT:4.7UF,+75-10%,35V	55680	ULA1V4R7TEA
A15C3046	281-0775-00			CAP.,FXD,CER DI:0.1UF,20%,50V	04222	MA205E104MAA
A15C3047	281-0813-00			CAP.,FXD CER DI:0.047UF,20%,50V	04222	GC705-E-473M
A15C3048	290-0846-00			CAP.,FXD,ELCTLT:47UF,-10+75%,35 WVDC	54473	ECE-A35V47LU
A15C3049	283-0696-00			CAP.,FXD,MICA D:2300PF,1%,500V	00853	D195F232F0
A15C3049	----- -----			(OPTION 02 ONLY)		
A15C3050	283-0696-00			CAP.,FXD,MICA D:2300PF,1%,500V	00853	D195F232F0
A15C3050	----- -----			(OPTION 02 ONLY)		
A15C3051	283-0696-00			CAP.,FXD,MICA D:2300PF,1%,500V	00853	D195F232F0
A15C3051	----- -----			(OPTION 02 ONLY)		
A15C3052	290-0244-00			CAP.,FXD,ELCTLT:0.47UF,5%,35V	56289	173D474X5035U
A15C3052	----- -----			(OPTION 02 ONLY)		
A15C3053	290-0246-00			CAP.,FXD,ELCTLT:3.3UF,10%,15V	56289	173D335X9015V
A15C3054	290-0974-00			CAP.,FXD,ELCTLT:10UF,20%,50VDC	55680	ULB1H100MEA
A15C3054	----- -----			(OPTION 02 ONLY)		
A15C3060	281-0775-00			CAP.,FXD,CER DI:0.1UF,20%,50V	04222	MA205E104MAA
A15C4010	285-0702-00			CAP.,FXD,PLSTC:0.033UF,5%,100V	84411	TEK44-33351
A15C4011	285-0702-00			CAP.,FXD,PLSTC:0.033UF,5%,100V	84411	TEK44-33351
A15C4012	285-0702-00			CAP.,FXD,PLSTC:0.033UF,5%,100V	84411	TEK44-33351
A15C4013	285-1056-00			CAP.,FXD,PLSTC:1UF,2%,50V	14752	650B1A105G
A15C4014	290-0974-00			CAP.,FXD,ELCTLT:10UF,20%,50VDC	55680	ULB1H100MEA
A15C4020	290-0974-00			CAP.,FXD,ELCTLT:10UF,20%,50VDC	55680	ULB1H100MEA
A15C4021	290-0974-00			CAP.,FXD,ELCTLT:10UF,20%,50VDC	55680	ULB1H100MEA
A15C4022	283-0639-00			CAP.,FXD,MICA D:56PF,1%,100V	00853	D151E560F0
A15C4022	----- -----			(OPTION 02 ONLY)		
A15C4022	283-0693-00			CAP.,FXD,MICA D:1730PF,1%,500V	00853	D19-5F1731F0
A15C4023	285-1056-00			CAP.,FXD,PLSTC:1UF,2%,50V	14752	650B1A105G
A15C4024	285-1056-00			CAP.,FXD,PLSTC:1UF,2%,50V	14752	650B1A105G
A15C4025	281-0775-00			CAP.,FXD,CER DI:0.1UF,20%,50V	04222	MA205E104MAA
A15C4025	----- -----			(OPTION 02 ONLY)		
A15C4030	285-0598-00			CAP.,FXD,PLSTC:0.01UF,5%,100V	19396	DU490B103J
A15C4030	----- -----			(STANDARD ONLY)		
A15C4030	281-0775-00			CAP.,FXD,CER DI:0.1UF,20%,50V	04222	MA205E104MAA
A15C4030	----- -----			(OPTION 02 ONLY)		
A15C4031	285-0683-00			CAP.,FXD,PLSTC:0.022UF,5%,100V	56289	192P22352
A15C4031	----- -----			(STANDARD ONLY)		
A15C4031	290-0782-00			CAP.,FXD,ELCTLT:4.7UF,+75-10%,35V	55680	ULA1V4R7TEA
A15C4031	----- -----			(OPTION 02 ONLY)		
A15C4032	285-0683-00			CAP.,FXD,PLSTC:0.022UF,5%,100V	56289	192P22352
A15C4032	----- -----			(STANDARD ONLY)		
A15C4032	281-0541-00			CAP.,FXD,CER DI:6.8PF,10%,500V	59660	301-000C0H0689D
A15C4032	----- -----			(OPTION 02 ONLY)		

Scan by Zenith

Component No.	Tektronix Part No.	Serial/Model No. Eff	Dscont	Name & Description	Mfr Code	Mfr Part Number
A15C4033	285-0650-00			CAP.,FXD,PLSTC:0.027UF,5%,100V	56289	192P27352M447
A15C4033	----- -----			(STANDARD ONLY)		
A15C4033	281-0775-00			CAP.,FXD,CER DI:0.1UF,20%,50V	04222	MA205E104MAA
A15C4033	----- -----			(OPTION 02 ONLY)		
A15C4034	281-0775-00			CAP.,FXD,CER DI:0.1UF,20%,50V	04222	MA205E104MAA
A15C4034	----- -----			(STANDARD ONLY)		
A15C4034	281-0786-00			CAP.,FXD,CER DI:150PF,10%,100V	04222	MA106A569D
A15C4034	----- -----			(OPTION 02 ONLY)		
A15C4041	281-0813-00			CAP.,FXD CER DI:0.047UF,20%,50V	04222	GC705-E-473M
A15C4042	290-0846-00			CAP.,FXD,ELCTLT:47UF,-10+75%,35 WVDC	54473	ECE-A35V47LU
A15C4044	290-0267-00			CAP.,FXD,ELCTLT:1UF,20%,35V	56289	173D105X0035V
A15C4045	281-0775-00			CAP.,FXD,CER DI:0.1UF,20%,50V	04222	MA205E104MAA
A15C4050	281-0813-00			CAP.,FXD CER DI:0.047UF,20%,50V	04222	GC705-E-473M
A15C4051	281-0813-00			CAP.,FXD CER DI:0.047UF,20%,50V	04222	GC705-E-473M
A15C4060	281-0775-00			CAP.,FXD,CER DI:0.1UF,20%,50V	04222	MA205E104MAA
A15CR1040	152-0141-02			SEMICOND DEVICE:SILICON,30V,150MA	01295	1N4152R
A15CR1040	----- -----			(OPTION 02 ONLY)		
A15CR1041	152-0141-02			SEMICOND DEVICE:SILICON,30V,150MA	01295	1N4152R
A15CR1041	----- -----			(OPTION 02 ONLY)		
A15CR2021	152-0141-02			SEMICOND DEVICE:SILICON,30V,150MA	01295	1N4152R
A15CR2031	152-0141-02			SEMICOND DEVICE:SILICON,30V,150MA	01295	1N4152R
A15CR2031	----- -----			(STANDARD ONLY)		
A15CR2032	152-0141-02			SEMICOND DEVICE:SILICON,30V,150MA	01295	1N4152R
A15CR2032	----- -----			(STANDARD ONLY)		
A15CR2050	152-0141-02			SEMICOND DEVICE:SILICON,30V,150MA	01295	1N4152R
A15CR2052	152-0141-02			SEMICOND DEVICE:SILICON,30V,150MA	01295	1N4152R
A15CR2053	152-0141-02			SEMICOND DEVICE:SILICON,30V,150MA	01295	1N4152R
A15CR3040	152-0141-02			SEMICOND DEVICE:SILICON,30V,150MA	01295	1N4152R
A15CR3041	152-0141-02			SEMICOND DEVICE:SILICON,30V,150MA	01295	1N4152R
A15CR3042	152-0141-02			SEMICOND DEVICE:SILICON,30V,150MA	01295	1N4152R
A15CR3043	152-0141-02			SEMICOND DEVICE:SILICON,30V,150MA	01295	1N4152R
A15CR3044	152-0141-02			SEMICOND DEVICE:SILICON,30V,150MA	01295	1N4152R
A15CR3045	152-0141-02			SEMICOND DEVICE:SILICON,30V,150MA	01295	1N4152R
A15CR3046	152-0141-02			SEMICOND DEVICE:SILICON,30V,150MA	01295	1N4152R
A15CR3046	----- -----			(STANDARD ONLY)		
A15CR3050	152-0141-02			SEMICOND DEVICE:SILICON,30V,150MA	01295	1N4152R
A15CR3061	152-0066-00			SEMICOND DEVICE:SILICON,400V,750MA	14433	LG4016
A15CR4020	152-0141-02			SEMICOND DEVICE:SILICON,30V,150MA	01295	1N4152R
A15CR4021	152-0141-02			SEMICOND DEVICE:SILICON,30V,150MA	01295	1N4152R
A15CR4022	152-0141-02			SEMICOND DEVICE:SILICON,30V,150MA	01295	1N4152R
A15CR4031	152-0141-02			SEMICOND DEVICE:SILICON,30V,150MA	01295	1N4152R
A15CR4032	152-0141-02			SEMICOND DEVICE:SILICON,30V,150MA	01295	1N4152R
A15CR4033	152-0246-00			SEMICOND DEVICE:SW,SI,40V,200MA	03508	DE140
A15CR4033	----- -----			(OPTION 02 ONLY)		
A15CR4034	152-0141-02			SEMICOND DEVICE:SILICON,30V,150MA	01295	1N4152R
A15CR4034	----- -----			(OPTION 02 ONLY)		
A15CR4035	152-0322-00			SEMICOND DEVICE:SILICON,15V,HOT CARRIER	50434	5082-2672
A15CR4035	----- -----			(OPTION 02 ONLY)		
A15CR4036	152-0322-00			SEMICOND DEVICE:SILICON,15V,HOT CARRIER	50434	5082-2672
A15CR4036	----- -----			(OPTION 02 ONLY)		
A15CR4050	152-0141-02			SEMICOND DEVICE:SILICON,30V,150MA	01295	1N4152R
A15CR4061	152-0066-00			SEMICOND DEVICE:SILICON,400V,750MA	14433	LG4016
A15DS3060	150-0077-01			LAMP,INCAND:14V,0.08A	08806	2182D
A15DS3061	150-0077-01			LAMP,INCAND:14V,0.08A	08806	2182D

Scan by Zenith

Component No.	Tektronix Part No.	Serial/Model No. Eff	Dscont	Name & Description	Mfr Code	Mfr Part Number
A15F4060	159-0022-00			FUSE,CARTRIDGE:3AG,1A,250V,FAST-BLOW	71400	AGC 1
A15F4061	159-0022-00			FUSE,CARTRIDGE:3AG,1A,250V,FAST-BLOW	71400	AGC 1
A15F4062	159-0016-00			FUSE,CARTRIDGE:3AG,1.5A,250V,FAST-BLOW	71400	AGC 1 1/2
A15J1011	131-1425-00			TERM SET,PIN:(36) 0.025 SQ RTANG,0.15L	22526	65521-136
A15J1011	----- -----			(STANDARD ONLY)		
A15J1011	131-1426-00			TERM SET,PIN:(36) 0.025 SQ RTANG,0.25L	22526	65524-136
A15J1011	----- -----			(OPTION 02 ONLY)		
A15J1012	131-1426-00			TERM SET,PIN:(36) 0.025 SQ RTANG,0.25L	22526	65524-136
A15J1020	131-1426-00			TERM SET,PIN:(36) 0.025 SQ RTANG,0.25L	22526	65524-136
A15J1020	----- -----			(STANDARD ONLY)		
A15J1020	131-1425-00			TERM SET,PIN:(36) 0.025 SQ RTANG,0.15L	22526	65521-136
A15J1020	----- -----			(OPTION 02 ONLY)		
A15J1061	131-1426-00			TERM SET,PIN:(36) 0.025 SQ RTANG,0.25L	22526	65524-136
A15P1042	136-0499-10			CONNECTOR,RCPT,:10 CONTACT	00779	4-380949-0
A15P1043	136-0499-06			CONN,RCPT,ELEC:CIRCUIT BD,6 CONTACTS	00779	3-380949-6
A15P1070	136-0499-06			CONN,RCPT,ELEC:CIRCUIT BD,6 CONTACTS	00779	3-380949-6
A15Q1041	151-0190-00			TRANSISTOR:SILICON,NPN	07263	S032677
A15Q1042	151-0254-00			TRANSISTOR:SILICON,NPN	03508	X38L3118
A15Q2020	151-0190-00			TRANSISTOR:SILICON,NPN	07263	S032677
A15Q2020	----- -----			(OPTION 02 ONLY)		
A15Q2021	151-1110-00			TRANSISTOR:SI,FE,N-CHANNEL	32293	ITS30974
A15Q2021	----- -----			(OPTION 02 ONLY)		
A15Q3040	151-1025-00			TRANSISTOR:SILICON,JFE,N-CHANNEL	01295	SFB8129
A15Q3040	----- -----			(STANDARD ONLY)		
A15Q3040	151-1110-00			TRANSISTOR:SI,FE,N-CHANNEL	32293	ITS30974
A15Q3040	----- -----			(OPTION 02 ONLY)		
A15Q3040	151-1025-00			TRANSISTOR:SILICON,JFE,N-CHANNEL	01295	SFB8129
A15Q3050	151-0190-00			TRANSISTOR:SILICON,NPN	07263	S032677
A15Q3051	151-0302-00			TRANSISTOR:SILICON,NPN	07263	S038487
A15Q4030	151-0192-00			TRANSISTOR:SILICON,NPN,SEL FROM MPS652	04713	SPS8801
A15Q4030	----- -----			(OPTION 02 ONLY)		
A15Q4050	151-0190-00			TRANSISTOR:SILICON,NPN	07263	S032677
A15Q4051	151-0188-00			TRANSISTOR:SILICON,PNP	04713	SPS6868
A15Q4052	151-0301-00			TRANSISTOR:SILICON,PNP	27014	2N2907A
A15Q4053	151-0188-00			TRANSISTOR:SILICON,PNP	04713	SPS6868
A15R1020	315-0203-00			RES.,FXD,CMPSN:20K OHM,5%,0.25W	01121	CB2035
A15R1021	315-0203-00			RES.,FXD,CMPSN:20K OHM,5%,0.25W	01121	CB2035
A15R1022	315-0272-00			RES.,FXD,CMPSN:2.7K OHM,5%,0.25W	01121	CB2725
A15R1023	321-0268-00			RES.,FXD,FILM:6.04K OHM,1%,0.125W	91637	MFF1816G60400F
A15R1024	321-0268-00			RES.,FXD,FILM:6.04K OHM,1%,0.125W	91637	MFF1816G60400F
A15R1030	311-1232-00			RES.,VAR,NONWIR:50K OHM,20%,0.50W	32997	3386F-T04-503
A15R1030	----- -----			(STANDARD ONLY)		
A15R1030	311-1231-00			RES.,VAR,NONWIR:25K OHM,20%,0.50W	32997	3386F-T04-253
A15R1030	----- -----			(OPTION 02 ONLY)		
A15R1031	315-0510-00			RES.,FXD,CMPSN:51 OHM,5%,0.25W	01121	CB5105
A15R1032	315-0473-00			RES.,FXD,CMPSN:47K OHM,5%,0.25W	01121	CB4735
A15R1033	321-0222-07			RES.,FXD,FILM:2K OHM,0.1%,0.125W	91637	CMFF55116C20000B
A15R1034	321-0222-07			RES.,FXD,FILM:2K OHM,0.1%,0.125W	91637	CMFF55116C20000B
A15R1035	311-1232-00			RES.,VAR,NONWIR:50K OHM,20%,0.50W	32997	3386F-T04-503
A15R1035	----- -----			(STANDARD ONLY)		
A15R1035	321-0297-00			RES.,FXD,FILM:12.1K OHM,1%,0.125W	91637	MFF1816G12101F
A15R1035	----- -----			(OPTION 02 ONLY)		
A15R1036	321-0289-07			RES.,FXD,FILM:10K OHM,0.1%,0.125W	91637	CMF55116C10001B
A15R1036	----- -----			(STANDARD ONLY)		

Scan by Zenith

Component No.	Tektronix Part No.	Serial/Model No. Eff	Dscont	Name & Description	Mfr Code	Mfr Part Number
A15R1036	321-0344-00			RES.,FXD,FILM:37.4K OHM,1%,0.125W	91637	MFF1816G37401F
A15R1036	----- -----			(OPTION 02 ONLY)		
A15R1037	321-0259-00			RES.,FXD,FILM:4.87K OHM,1%,0.125W	91637	MFF1816G48700F
A15R1037	----- -----			(OPTION 02 ONLY)		
A15R1040	311-1225-00			RES.,VAR,NONWIR:1K OHM,20%,0.50W	32997	3386F-T04-102
A15R1040	----- -----			(STANDARD ONLY)		
A15R1040	315-0102-00			RES.,FXD,CMPSN:1K OHM,5%,0.25W	01121	CB1025
A15R1040	----- -----			(OPTION 02 ONLY)		
A15R1041	315-0153-00			RES.,FXD,CMPSN:15K OHM,5%,0.25W	01121	CB1535
A15R1042	315-0103-00			RES.,FXD,CMPSN:10K OHM,5%,0.25W	01121	CB1035
A15R1043	315-0104-00			RES.,FXD,CMPSN:100K OHM,5%,0.25W	01121	CB1045
A15R1044	315-0432-00			RES.,FXD,CMPSN:4.3K OHM,5%,0.25W	01121	CB4325
A15R1045	315-0203-00			RES.,FXD,CMPSN:20K OHM,5%,0.25W	01121	CB2035
A15R1046	321-0277-00			RES.,FXD,FILM:7.5K OHM,1%,0.125W	91637	MFF1816G75000F
A15R1046	----- -----			(OPTION 02 ONLY)		
A15R1047	321-0289-07			RES.,FXD,FILM:10K OHM,0.1%,0.125W	91637	CMF55116C10001B
A15R1047	----- -----			(OPTION 02 ONLY)		
A15R1048	321-0289-07			RES.,FXD,FILM:10K OHM,0.1%,0.125W	91637	CMF55116C10001B
A15R1048	----- -----			(OPTION 02 ONLY)		
A15R2010	315-0203-00			RES.,FXD,CMPSN:20K OHM,5%,0.25W	01121	CB2035
A15R2011	315-0203-00			RES.,FXD,CMPSN:20K OHM,5%,0.25W	01121	CB2035
A15R2012	315-0274-00			RES.,FXD,CMPSN:270K OHM,5%,0.25W	01121	CB2745
A15R2012	----- -----			(OPTION 02 ONLY)		
A15R2012	315-0203-00			RES.,FXD,CMPSN:20K OHM,5%,0.25W	01121	CB2035
A15R2013	315-0203-00			RES.,FXD,CMPSN:20K OHM,5%,0.25W	01121	CB2035
A15R2020	315-0472-00			RES.,FXD,CMPSN:4.7K OHM,5%,0.25W	01121	CB4725
A15R2021	321-0289-00			RES.,FXD,FILM:10K OHM,1%,0.125W	91637	MFF1816G10001F
A15R2021	----- -----			(STANDARD ONLY)		
A15R2022	321-0673-07			RES.,FXD,FILM:17K OHM,0.1%,0.125W	91637	MFF1816C17001B
A15R2022	----- -----			(OPTION 02 ONLY)		
A15R2023	321-0318-00			RES.,FXD,FILM:20K OHM,1%,0.125W	91637	MFF1816G20001F
A15R2023	----- -----			(STANDARD ONLY)		
A15R2023	315-0153-00			RES.,FXD,CMPSN:15K OHM,5%,0.25W	01121	CB1535
A15R2023	----- -----			(OPTION 02 ONLY)		
A15R2024	321-0240-00			RES.,FXD,FILM:3.09K OHM,1%,0.125W	91637	MFF1816G30900F
A15R2025	315-0271-00			RES.,FXD,CMPSN:270 OHM,5%,0.25W	01121	CB2715
A15R2026	315-0153-00			RES.,FXD,CMPSN:15K OHM,5%,0.25W	01121	CB1535
A15R2026	----- -----			(OPTION 02 ONLY)		
A15R2027	315-0243-00			RES.,FXD,CMPSN:24K OHM,5%,0.25W	01121	CB2435
A15R2027	----- -----			(OPTION 02 ONLY)		
A15R2028	315-0102-00			RES.,FXD,CMPSN:1K OHM,5%,0.25W	01121	CB1025
A15R2028	----- -----			(OPTION 02 ONLY)		
A15R2031	321-0289-00			RES.,FXD,FILM:10K OHM,1%,0.125W	91637	MFF1816G10001F
A15R2031	----- -----			(STANDARD ONLY)		
A15R2031	321-0293-00			RES.,FXD,FILM:11K OHM,1%,0.125W	91637	MFF1816G11001F
A15R2031	----- -----			(OPTION 02 ONLY)		
A15R2032	321-0289-07			RES.,FXD,FILM:10K OHM,0.1%,0.125W	91637	CMF55116C10001B
A15R2032	----- -----			(STANDARD ONLY)		
A15R2032	321-0291-00			RES.,FXD,FILM:10.5K OHM,1%,0.125W	91637	MFF1816G10501F
A15R2032	----- -----			(OPTION 02 ONLY)		
A15R2033	321-0260-00			RES.,FXD,FILM:4.99K OHM,1%,0.125W	91637	MFF1816G49900F
A15R2033	----- -----			(STANDARD ONLY)		
A15R2033	321-0260-00			RES.,FXD,FILM:4.99K OHM,1%,0.125W	91637	MFF1816G49900F
A15R2033	----- -----			(OPTION 02 ONLY)		

Scan by Zenith

Component No.	Tektronix Part No.	Serial/Model No. Eff	Dscont	Name & Description	Mfr Code	Mfr Part Number
A15R2034	315-0102-00			RES.,FXD,CMPSN:1K OHM,5%,0.25W	01121	CB1025
A15R2035	311-1231-00			RES.,VAR,NONWIR:25K OHM,20%,0.50W	32997	3386F-T04-253
A15R2035	----- -----			(OPTION 02 ONLY)		
A15R2040	321-0291-00			RES.,FXD,FILM:10.5K OHM,1%,0.125W	91637	MFF1816G10501F
A15R2040	----- -----			(STANDARD ONLY)		
A15R2040	321-0238-00			RES.,FXD,FILM:2.94K OHM,1%,0.125W	91637	MFF1816G29400F
A15R2040	----- -----			(OPTION 02 ONLY)		
A15R2041	315-0473-00			RES.,FXD,CMPSN:47K OHM,5%,0.25W	01121	CB4735
A15R2041	----- -----			(STANDARD ONLY)		
A15R2041	321-0291-00			RES.,FXD,FILM:10.5K OHM,1%,0.125W	91637	MFF1816G10501F
A15R2041	----- -----			(OPTION 02 ONLY)		
A15R2042	315-0101-00			RES.,FXD,CMPSN:100 OHM<5%,0.25W	01121	CB1015
A15R2042	----- -----			(STANDARD ONLY)		
A15R2042	321-0222-07			RES.,FXD,FILM:2K OHM,0.1%,0.125W	91637	CMFF55116C20000B
A15R2042	----- -----			(OPTION 02 ONLY)		
A15R2043	315-0684-00			RES.,FXD,CMPSN:680K OHM,5%,0.25W	01121	CB6845
A15R2044	315-0153-00			RES.,FXD,CMPSN:15K OHM,5%,0.25W	01121	CB1535
A15R2045	315-0203-00			RES.,FXD,CMPSN:20K OHM,5%,0.25W	01121	CB2035
A15R2046	315-0203-00			RES.,FXD,CMPSN:20K OHM,5%,0.25W	01121	CB2035
A15R2047	315-0203-00			RES.,FXD,CMPSN:20K OHM,5%,0.25W	01121	CB2035
A15R2048	321-0222-07			RES.,FXD,FILM:2K OHM,0.1%,0.125W	91637	CMFF55116C20000B
A15R2048	----- -----			(OPTION 02 ONLY)		
A15R2049	321-0222-07			RES.,FXD,FILM:2K OHM,0.1%,0.125W	91637	CMFF55116C20000B
A15R2049	----- -----			(OPTION 02 ONLY)		
A15R2050	315-0245-00			RES.,FXD,CMPSN:2.4M OHM,5%,0.25W	01121	CB2455
A15R2051	321-0312-00			RES.,FXD,FILM:17.4K OHM,1%,0.125W	91637	MFF1816G17401F
A15R2052	315-0106-00			RES.,FXD,CMPSN:10M OHM,5%,0.25W	01121	CB1065
A15R2053	321-0414-00			RES.,FXD,FILM:200K OHM,1%,0.125W	91637	MFF1816G20002F
A15R2054	315-0106-00			RES.,FXD,CMPSN:10M OHM,5%,0.25W	01121	CB1065
A15R2060	315-0226-00			RES.,FXD,CMPSN:22M OHM,5%,0.25W	01121	CB2265
A15R2061	315-0102-00			RES.,FXD,CMPSN:1K OHM,5%,0.25W	01121	CB1025
A15R2062	315-0102-00			RES.,FXD,CMPSN:1K OHM,5%,0.25W	01121	CB1025
A15R2063	321-0256-00			RES.,FXD,FILM:4.53K OHM,1%,0.125W	91637	MFF1816G45300F
A15R2064	315-0132-00			RES.,FXD,CMPSN:1.3K OHM,5%,0.25W	01121	CB1325
A15R2065	321-0131-00			RES.,FXD,FILM:226 OHM,1%,0.125W	91637	MFF1816G226R0F
A15R3020	315-0123-00			RES.,FXD,CMPSN:12K OHM,5%,0.25W	01121	CB1235
A15R3021	315-0101-00			RES.,FXD,CMPSN:100 OHM<5%,0.25W	01121	CB1015
A15R3022	315-0102-00			RES.,FXD,CMPSN:1K OHM,5%,0.25W	01121	CB1025
A15R3023	321-0316-00			RES.,FXD,FILM:19.1K OHM,1%,0.125W	91637	MFF1816G19101F
A15R3024	321-0316-00			RES.,FXD,FILM:19.1K OHM,1%,0.125W	91637	MFF1816G19101F
A15R3025	321-0316-00			RES.,FXD,FILM:19.1K OHM,1%,0.125W	91637	MFF1816G19101F
A15R3026	315-0271-00			RES.,FXD,CMPSN:270 OHM,5%,0.25W	01121	CB2715
A15R3027	321-0265-00			RES.,FXD,FILM:5.62K OHM,1%,0.125W	91637	MFF1816G56200F
A15R3028	321-0265-00			RES.,FXD,FILM:5.62K OHM,1%,0.125W	91637	MFF1816G56200F
A15R3029	321-0265-00			RES.,FXD,FILM:5.62K OHM,1%,0.125W	91637	MFF1816G56200F
A15R3030	315-0101-00			RES.,FXD,CMPSN:100 OHM<5%,0.25W	01121	CB1015
A15R3031	321-0260-00			RES.,FXD,FILM:4.99K OHM,1%,0.125W	91637	MFF1816G49900F
A15R3032	321-0326-00			RES.,FXD,FILM:24.3K OHM,1%,0.125W	91637	CMF55116G24301F
A15R3033	321-0423-00			RES.,FXD,FILM:249K OHM,1%,0.125W	91637	CMF55116G24902F
A15R3033	----- -----			(OPTION 02 ONLY)		
A15R3034	321-0293-00			RES.,FXD,FILM:11K OHM,1%,0.125W	91637	MFF1816G11001F
A15R3034	----- -----			(OPTION 02 ONLY)		
A15R3035	315-0101-00			RES.,FXD,CMPSN:100 OHM<5%,0.25W	01121	CB1015
A15R3035	----- -----			(OPTION 02 ONLY)		

Scan by Zenith

Component No.	Tektronix Part No.	Serial/Model No. Eff	Dscont	Name & Description	Mfr Code	Mfr Part Number
A15R3036	321-0291-00			RES.,FXD,FILM:10.5K OHM,1%,0.125W	91637	MFF1816G10501F
A15R3036	----- -----			(STANDARD ONLY)		
A15R3036	321-0291-00			RES.,FXD,FILM:10.5K OHM,1%,0.125W	91637	MFF1816G10501F
A15R3036	----- -----			(OPTION 02 ONLY)		
A15R3040	315-0123-00			RES.,FXD,CMPSN:12K OHM,5%,0.25W	01121	CB1235
A15R3041	315-0243-00			RES.,FXD,CMPSN:24K OHM,5%,0.25W	01121	CB2435
A15R3042	315-0100-00			RES.,FXD,CMPSN:10 OHM,5%,0.25W	01121	CB1005
A15R3043	321-0283-00			RES.,FXD,FILM:8.66K OHM,1%,0.125W	91637	CMF55116G86600F
A15R3044	321-0268-00			RES.,FXD,FILM:6.04K OHM,1%,0.125W	91637	MFF1816G60400F
A15R3045	315-0122-00			RES.,FXD,CMPSN:1.2K OHM,5%,0.25W	01121	CB1225
A15R3046	321-0222-07			RES.,FXD,FILM:2K OHM,0.1%,0.125W	91637	CMFF55116C20000B
A15R3046	----- -----			(OPTION 02 ONLY)		
A15R3047	311-1423-00			RES.,VAR,NONWIR:20 OHM,20%,0.50W	73138	72PM R20-1A
A15R3048	321-0382-00			RES.,FXD,FILM:93.1K OHM,1%,0.125W	91637	MFF1816G93101F
A15R3048	----- -----			(OPTION 02 ONLY)		
A15R3049	321-0156-00			RES.,FXD,FILM:412 OHM,1%,0.125W	91637	MFF1816G412R0F
A15R3049	----- -----			(OPTION 02 ONLY)		
A15R3050	321-0414-00			RES.,FXD,FILM:200K OHM,1%,0.125W	91637	MFF1816G20002F
A15R3051	321-0416-00			RES.,FXD,FILM:210K OHM,1%,0.125W	91637	MFF1816G21002F
A15R3052	315-0106-00			RES.,FXD,CMPSN:10M OHM,5%,0.25W	01121	CB1065
A15R3053	307-0093-00			RES.,FXD,CMPSN:1.2 OHM,5%,0.50W	01121	EB12G5
A15R3054	315-0102-00			RES.,FXD,CMPSN:1K OHM,5%,0.25W	01121	CB1025
A15R3055	315-0102-00			RES.,FXD,CMPSN:1K OHM,5%,0.25W	01121	CB1025
A15R3056	315-0201-00			RES.,FXD,CMPSN:200 OHM,5%,0.25W	01121	CB2015
A15R3057	315-0472-00			RES.,FXD,CMPSN:4.7K OHM,5%,0.25W	01121	CB4725
A15R3058	315-0472-00			RES.,FXD,CMPSN:4.7K OHM,5%,0.25W	01121	CB4725
A15R3060	321-0174-00			RES.,FXD,FILM:634 OHM,1%,0.125W	91637	MFF1816G634R0F
A15R3061	321-0661-00			RES.,FXD,FILM:600 OHM,1%,0.125W	91637	MFF1816G600R0F
A15R4010	321-0244-00			RES.,FXD,FILM:3.4K OHM,1%,0.125W	91637	MFF1816G34000F
A15R4011	321-0363-00			RES.,FXD,FILM:59K OHM,1%,0.125W	91637	MFF1816G59001F
A15R4012	321-0283-00			RES.,FXD,FILM:8.66K OHM,1%,0.125W	91637	CMF55116G86600F
A15R4013	321-0326-00			RES.,FXD,FILM:24.3K OHM,1%,0.125W	91637	CMF55116G24301F
A15R4013	----- -----			(STANDARD ONLY)		
A15R4013	321-0326-00			RES.,FXD,FILM:24.3K OHM,1%,0.125W	91637	CMF55116G24301F
A15R4013	----- -----			(OPTION 02 ONLY)		
A15R4014	321-0385-00			RES.,FXD,FILM:100K OHM,1%,0.125W	91637	MFF1816G10002F
A15R4014	----- -----			(STANDARD ONLY)		
A15R4014	321-0385-00			RES.,FXD,FILM:100K OHM,1%,0.125W	91637	MFF1816G10002F
A15R4014	----- -----			(OPTION 02 ONLY)		
A15R4020	315-0102-00			RES.,FXD,CMPSN:1K OHM,5%,0.25W	01121	CB1025
A15R4021	315-0104-00			RES.,FXD,CMPSN:100K OHM,5%,0.25W	01121	CB1045
A15R4022	321-0291-00			RES.,FXD,FILM:10.5K OHM,1%,0.125W	91637	MFF1816G10501F
A15R4023	321-0249-00			RES.,FXD,FILM:3.83K OHM,1%,0.125W	91637	MFF1816G38300F
A15R4024	321-0432-00			RES.,FXD,FILM:309K OHM,1%,0.125W	91637	MFF1816G30902F
A15R4024	----- -----			(STANDARD ONLY)		
A15R4025	321-0197-00			RES.,FXD,FILM:1.1K OHM,1%,0.125W	91637	MFF1816G11000F
A15R4025	----- -----			(STANDARD ONLY)		
A15R4026	321-0289-00			RES.,FXD,FILM:10K OHM,1%,0.125W	91637	MFF1816G10001F
A15R4026	----- -----			(STANDARD ONLY)		
A15R4027	321-0374-00			RES.,FXD,FILM:76.8K OHM,1%,0.125W	91637	MFF1816G76801F
A15R4027	----- -----			(STANDARD ONLY)		
A15R4031	321-0289-00			RES.,FXD,FILM:10K OHM,1%,0.125W	91637	MFF1816G10001F
A15R4032	321-0289-00			RES.,FXD,FILM:10K OHM,1%,0.125W	91637	MFF1816G10001F
A15R4033	321-0289-00			RES.,FXD,FILM:10K OHM,1%,0.125W	91637	MFF1816G10001F

Scan by Zenith

Component No.	Tektronix Part No.	Serial/Model No. Eff	Dscont	Name & Description	Mfr Code	Mfr Part Number
A15R4034	315-0302-00			RES.,FXD,CMPSN:3K OHM,5%,0.25W	01121	CB3025
A15R4034	----- -----			(OPTION 02 ONLY)		
A15R4035	315-0474-00			RES.,FXD,CMPSN:470K OHM,5%,0.25W	01121	CB4745
A15R4035	----- -----			(OPTION 02 ONLY)		
A15R4037	311-1231-00			RES.,VAR,NONWIR:25K OHM,20%,0.50W	32997	3386F-T04-253
A15R4037	----- -----			(OPTION 02 ONLY)		
A15R4038	315-0473-00			RES.,FXD,CMPSN:47K OHM,5%,0.25W	01121	CB4735
A15R4038	----- -----			(OPTION 02 ONLY)		
A15R4040	315-0225-00			RES.,FXD,CMPSN:2.2M OHM,5%,0.25W	01121	CB2255
A15R4040	----- -----			(OPTION 02 ONLY)		
A15R4041	321-0289-07			RES.,FXD,FILM:10K OHM,0.1%,0.125W	91637	CMF55116C10001B
A15R4042	321-0289-07			RES.,FXD,FILM:10K OHM,0.1%,0.125W	91637	CMF55116C10001B
A15R4043	315-0102-00			RES.,FXD,CMPSN:1K OHM,5%,0.25W	01121	CB1025
A15R4044	307-0093-00			RES.,FXD,CMPSN:1.2 OHM,5%,0.50W	01121	EB12G5
A15R4045	321-0306-00			RES.,FXD,FILM:15K OHM,1%,0.125W	91637	MFF1816G15001F
A15R4045	----- -----			(OPTION 02 ONLY)		
A15R4046	315-0221-00			RES.,FXD,CMPSN:220 OHM,5%,0.25W	01121	CB2215
A15R4047	315-0472-00			RES.,FXD,CMPSN:4.7K OHM,5%,0.25W	01121	CB4725
A15R4048	321-0400-00			RES.,FXD,FILM:143K OHM,1%,0.125W	91637	CMF55116G14302F
A15R4048	----- -----			(OPTION 02 ONLY)		
A15R4049	321-1310-03			RES.,FXD,FILM:16.7K OHM,0.25%,0.125W	91637	MFF1816D16701C
A15R4049	----- -----			(OPTION 02 ONLY)		
A15R4050	315-0101-00			RES.,FXD,CMPSN:100 OHM<5%,0.25W	01121	CB1015
A15R4051	315-0201-00			RES.,FXD,CMPSN:200 OHM,5%,0.25W	01121	CB2015
A15R4052	315-0102-00			RES.,FXD,CMPSN:1K OHM,5%,0.25W	01121	CB1025
A15R4053	315-0472-00			RES.,FXD,CMPSN:4.7K OHM,5%,0.25W	01121	CB4725
A15R4054	315-0101-00			RES.,FXD,CMPSN:100 OHM<5%,0.25W	01121	CB1015
A15R4055	311-1231-00			RES.,VAR,NONWIR:25K OHM,20%,0.50W	32997	3386F-T04-253
A15R4055	----- -----			(OPTION 02 ONLY)		
A15S1010	260-2000-00			SWITCH,PUSH:5 BUTTON,2 & 4 POLE	71590	2KBB0500001305
A15S1011	260-2159-00			SWITCH,PUSH:5 BUTTON,2 POLE		
A15TP3041	214-0579-00			TERM,TEST POINT:BRS CD PL	80009	214-0579-00
A15TP3042	214-0579-00			TERM,TEST POINT:BRS CD PL	80009	214-0579-00
A15TP3043	214-0579-00			TERM,TEST POINT:BRS CD PL	80009	214-0579-00
A15TP3044	214-0579-00			TERM,TEST POINT:BRS CD PL	80009	214-0579-00
A15U1010	156-0874-02			MICROCIRCUIT,DI:8 BIT ADDRESSABLE LCH	04713	SN74LS259
A15U1020	156-1225-01			MICROCIRCUIT,LI:DUAL COMPARATOR,SCREENED	27014	LM393N/A+
A15U1021	156-0514-01			MICROCIRCUIT,DI:DIFF 4-CHANNEL MUX,SEL	80009	156-0514-01
A15U2020	156-0495-02			MICROCIRCUIT,LI:QUAD OPNL AMPL,SELECTED	01295	LM324J4
A15U2021	156-1191-00			MICROCIRCUIT,LI:BI-FET OPNL AMPL	01295	TL072ACP
A15U2021	----- -----			(OPTION 02 ONLY)		
A15U2023	156-1191-00			MICROCIRCUIT,LI:BI-FET OPNL AMPL	01295	TL072ACP
A15U2030	156-1272-00			MICROCIRCUIT,LI:DUAL OPERATIONAL AMPLIFIER	18324	NE5532 FE-IIB
A15U2040	156-1191-00			MICROCIRCUIT,LI:BI-FET OPNL AMPL	01295	TL072ACP
A15U2040	----- -----			(STANDARD ONLY)		
A15U2040	156-1200-00			MICROCIRCUIT,LI:OPERATIONAL AMPL	01295	TL074CN
A15U2040	----- -----			(OPTION 02 ONLY)		
A15U2041	156-0763-02			MICROCIRCUIT,DI:HEX CONT BOUNCE ELIMINATOR	04713	MC14490BCLD
A15U2042	156-0931-00			MICROCIRCUIT,DI:QUAD D FF	80009	156-0931-00
A15U2050	156-0931-00			MICROCIRCUIT,DI:QUAD D FF	80009	156-0931-00
A15U2051	156-0411-00			MICROCIRCUIT,LI:QUAD-COMP,SGL SUPPLY	27014	LM339N
A15U2060	156-0513-00			MICROCIRCUIT,DI:8-CHAN MUX	80009	156-0513-00
A15U3010	156-0994-02			MICROCIRCUIT,DI:8 INPUT DATA SEL/MUX	01295	SN74LS151NP3
A15U3020	156-0515-02			MICROCIRCUIT,DI:TRIPLE 3-CHAN MUX,SEL	80009	156-0515-02

Scan by Zenith

Component No.	Tektronix Part No.	Serial/Model No. Eff	Dscont	Name & Description	Mfr Code	Mfr Part Number
A15U3021	156-1191-00			MICROCIRCUIT,LI:BI-FET OPNL AMPL	01295	TL072ACP
A15U3021	----- -----			(STANDARD ONLY)		
A15U3030	156-1200-00			MICROCIRCUIT,LI:OPERATIONAL AMPL	01295	TL074CN
A15U3030	----- -----			(OPTION 02 ONLY)		
A15U3031	156-1457-00			MICROCIRCUIT,LI:TRUE RMS CONVERTER	24355	AD41127
A15U4020	156-1191-00			MICROCIRCUIT,LI:BI-FET OPNL AMPL	01295	TL072ACP
A15U4030	156-1191-00			MICROCIRCUIT,LI:BI-FET OPNL AMPL	01295	TL072ACP
A15U4040	156-0277-00			MICROCIRCUIT,LI:VOLTAGE REGULATOR	07263	MICROA7805UC
A15U4041	156-0158-00			MICROCIRCUIT,LI:DUAL OPERATIONAL AMPLIFIER	18324	MC1458N
A15VR1020	152-0127-00			SEMICOND DEVICE:ZENER,0.4W,7.5V,5%	04713	SZG35009K2
A15VR2020	152-0127-00			SEMICOND DEVICE:ZENER,0.4W,7.5V,5%	04713	SZG35009K2
A15VR3031	152-0647-00			SEMICOND DEVICE:ZENER,0.4W,6.8V,5%	04713	SZG35014K3RL
A15VR3041	152-0486-00			SEMICOND DEVICE:ZENER,0.25W,6.2V,5%	80009	152-0486-00
A15VR3051	152-0590-00			SEMICOND DEVICE:ZENER,18V,5% AT 7MA	04713	SZG35014K2
A15VR4060	152-0590-00			SEMICOND DEVICE:ZENER,18V,5% AT 7MA	04713	SZG35014K2
A15W1060	131-0566-00			BUS CONDUCTOR:DUMMY RES,2.375,22 AWG	57668	JWW-0200E0

Scan by Zenith

Component No.	Tektronix Part No.	Serial/Model No. Eff	Dscont	Name & Description	Mfr Code	Mfr Part Number
A16	670-7993-00			CKT BOARD ASSY:GPIB	80009	670-7993-00
A16C1010	281-0775-00			CAP.,FXD,CER DI:0.1UF,20%,50V	04222	MA205E104MAA
A16C1041	290-0944-00			CAP.,FXD,ELCTLT:220UF,+50-10%,10V	55680	ULB1A221TPAANA
A16C2021	281-0775-00			CAP.,FXD,CER DI:0.1UF,20%,50V	04222	MA205E104MAA
A16C2036	281-0775-00			CAP.,FXD,CER DI:0.1UF,20%,50V	04222	MA205E104MAA
A16C2037	281-0775-00			CAP.,FXD,CER DI:0.1UF,20%,50V	04222	MA205E104MAA
A16C2051	281-0775-00			CAP.,FXD,CER DI:0.1UF,20%,50V	04222	MA205E104MAA
A16C2052	281-0775-00			CAP.,FXD,CER DI:0.1UF,20%,50V	04222	MA205E104MAA
A16C2053	281-0809-00			CAP.,FXD,CER DI:200PF,5%,100V	04222	GC101A201J
A16C3012	290-0944-00			CAP.,FXD,ELCTLT:220UF,+50-10%,10V	55680	ULB1A221TPAANA
A16C3022	281-0775-00			CAP.,FXD,CER DI:0.1UF,20%,50V	04222	MA205E104MAA
A16C3025	281-0762-00			CAP.,FXD,CER DI:27PF,20%,100V	04222	GC101A270M
A16C3026	281-0762-00			CAP.,FXD,CER DI:27PF,20%,100V	04222	GC101A270M
A16C3031	283-0203-00			CAP.,FXD,CER DI:0.47UF,20%,50V	04222	5R305SE474MAA
A16C3033	281-0775-00			CAP.,FXD,CER DI:0.1UF,20%,50V	04222	MA205E104MAA
A16C3041	281-0775-00			CAP.,FXD,CER DI:0.1UF,20%,50V	04222	MA205E104MAA
A16C3053	285-1098-00			CAP.,FXD,PLSTC:0.22UF,10%,80V	56289	192P2249R8
A16C4012	281-0775-00			CAP.,FXD,CER DI:0.1UF,20%,50V	04222	MA205E104MAA
A16C4013	281-0775-00			CAP.,FXD,CER DI:0.1UF,20%,50V	04222	MA205E104MAA
A16CR1031	152-0141-02			SEMICOND DEVICE:SILICON,30V,150MA	01295	1N4152R
A16CR1032	152-0141-02			SEMICOND DEVICE:SILICON,30V,150MA	01295	1N4152R
A16CR2064	152-0141-02			SEMICOND DEVICE:SILICON,30V,150MA	01295	1N4152R
A16CR4014	152-0141-02			SEMICOND DEVICE:SILICON,30V,150MA	01295	1N4152R
A16J1010	131-0608-00			TERMINAL,PIN:0.365 L X 0.025 PH BRZ GOLD	22526	47357
A16J2034	131-0608-00			TERMINAL,PIN:0.365 L X 0.025 PH BRZ GOLD	22526	47357
A16J2050	131-2238-00			CONN,RCPT,ELEC:CKT BD,2 X 20,MALE	000GS	OBD
A16J3021	131-0608-00			TERMINAL,PIN:0.365 L X 0.025 PH BRZ GOLD	22526	47357
A16J3023	131-0608-00			TERMINAL,PIN:0.365 L X 0.025 PH BRZ GOLD	22526	47357
A16J3060	131-0608-00			TERMINAL,PIN:0.365 L X 0.025 PH BRZ GOLD	22526	47357
A16L3011	108-0538-00			COIL,RF:2.7UH	76493	JWM#B7059
A16P1010	131-0993-00			BUS,CONDUCTOR:2 WIRE BLACK	00779	850100-01
A16P1040	136-0499-06			CONN,RCPT,ELEC:CIRCUIT BD,6 CONTACTS	00779	3-380949-6
A16P1050	136-0499-14			CONNECTOR,RCPT,:14 CONTACT	00779	4-380949-4
A16P2060	136-0499-04			CONNECTOR,RCPT,:4 CONTACT	00779	3-380949-4
A16P3021	131-0993-00			BUS,CONDUCTOR:2 WIRE BLACK	00779	850100-01
A16P3023	131-0993-00			BUS,CONDUCTOR:2 WIRE BLACK	00779	850100-01
A16Q1042	151-0188-00			TRANSISTOR:SILICON,PNP	04713	SPS6868
A16Q1060	151-0302-00			TRANSISTOR:SILICON,NPN	07263	S038487
A16R1031	307-0696-00			RES NTWK,FXD,FI:7,10K OHM,2%,0.15W	01121	208A103
A16R1032	315-0101-00			RES.,FXD,CMPSN:100 OHM<5%,0.25W	01121	CB1015
A16R1042	315-0153-00			RES.,FXD,CMPSN:15K OHM,5%,0.25W	01121	CB1535
A16R1044	307-0696-00			RES NTWK,FXD,FI:7,10K OHM,2%,0.15W	01121	208A103
A16R1053	315-0821-00			RES.,FXD,CMPSN:820 OHM,5%,0.25W	01121	CB8215
A16R1054	315-0821-00			RES.,FXD,CMPSN:820 OHM,5%,0.25W	01121	CB8215
A16R1055	315-0821-00			RES.,FXD,CMPSN:820 OHM,5%,0.25W	01121	CB8215
A16R1056	315-0821-00			RES.,FXD,CMPSN:820 OHM,5%,0.25W	01121	CB8215
A16R1060	315-0203-00			RES.,FXD,CMPSN:20K OHM,5%,0.25W	01121	CB2035
A16R2032	307-0542-00			RES,NTWK,FXD,FI:10K OHM,5%,0.125W	01121	106A103
A16R2035	315-0432-00			RES.,FXD,CMPSN:4.3K OHM,5%,0.25W	01121	CB4325
A16R2036	315-0102-00			RES.,FXD,CMPSN:1K OHM,5%,0.25W	01121	CB1025
A16R2046	315-0511-00			RES.,FXD,CMPSN:510 OHM,5%,0.25W	01121	CB5115
A16R2047	315-0102-00			RES.,FXD,CMPSN:1K OHM,5%,0.25W	01121	CB1025
A16R2051	315-0274-00			RES.,FXD,CMPSN:270K OHM,5%,0.25W	01121	CB2745

Scan by Zenith

Component No.	Tektronix Part No.	Serial/Model No. Eff	Dscont	Name & Description	Mfr Code	Mfr Part Number
A16R2052	315-0203-00			RES.,FXD,CMPSN:20K OHM,5%,0.25W	01121	CB2035
A16R2053	315-0513-00			RES.,FXD,CMPSN:51K OHM,5%,0.25W	01121	CB5135
A16R2061	315-0512-00			RES.,FXD,CMPSN:5.1K OHM,5%,0.25W	01121	CB5125
A16R2062	321-0269-00			RES.,FXD,FILM:6.19K OHM,1%,0.125W	91637	MFF1816G61900F
A16R2063	321-0199-00			RES.,FXD,FILM:1.15K OHM,1%,0.125W	91637	MFF1816G11500F
A16R2064	311-2082-00			RES.,VAR,NONWIR:TRMR,200 OHM,10%,0.5W	73138	72-256-0
A16R3024	307-0446-00			RES,NTWK,FXD FI:10K OHM,20%,(9) RES	91637	MSP10A01-103M
A16R3025	315-0332-00			RES.,FXD,CMPSN:3.3K OHM,5%,0.25W	01121	CB3325
A16R3031	307-1137-00			RES NTWK,FXD,FI:8.5M OHM,50%,0.125W	00779	435704-8
A16R3032	315-0105-00			RES.,FXD,CMPSN:1M OHM,5%,0.25W	01121	CB1055
A16R3041	315-0514-00			RES.,FXD,CMPSN:510K OHM,5%,0.25W	01121	CB5145
A16R3042	315-0332-00			RES.,FXD,CMPSN:3.3K OHM,5%,0.25W	01121	CB3325
A16R3043	315-0332-00			RES.,FXD,CMPSN:3.3K OHM,5%,0.25W	01121	CB3325
A16R3044	315-0335-00			RES.,FXD,CMPSN:3.3M OHM,5%,0.25W	01121	CB3355
A16R3045	315-0513-00			RES.,FXD,CMPSN:51K OHM,5%,0.25W	01121	CB5135
A16R3051	315-0332-00			RES.,FXD,CMPSN:3.3K OHM,5%,0.25W	01121	CB3325
A16R3052	315-0332-00			RES.,FXD,CMPSN:3.3K OHM,5%,0.25W	01121	CB3325
A16R3053	315-0332-00			RES.,FXD,CMPSN:3.3K OHM,5%,0.25W	01121	CB3325
A16R3054	315-0332-00			RES.,FXD,CMPSN:3.3K OHM,5%,0.25W	01121	CB3325
A16R3055	315-0335-00			RES.,FXD,CMPSN:3.3M OHM,5%,0.25W	01121	CB3355
A16R3056	315-0335-00			RES.,FXD,CMPSN:3.3M OHM,5%,0.25W	01121	CB3355
A16R3061	315-0332-00			RES.,FXD,CMPSN:3.3K OHM,5%,0.25W	01121	CB3325
A16R3062	315-0332-00			RES.,FXD,CMPSN:3.3K OHM,5%,0.25W	01121	CB3325
A16R3063	315-0332-00			RES.,FXD,CMPSN:3.3K OHM,5%,0.25W	01121	CB3325
A16R3064	315-0332-00			RES.,FXD,CMPSN:3.3K OHM,5%,0.25W	01121	CB3325
A16R3065	315-0335-00			RES.,FXD,CMPSN:3.3M OHM,5%,0.25W	01121	CB3355
A16R3066	315-0335-00			RES.,FXD,CMPSN:3.3M OHM,5%,0.25W	01121	CB3355
A16R3067	315-0225-00			RES.,FXD,CMPSN:2.2M OHM,5%,0.25W	01121	CB2255
A16R3068	315-0305-00			RES.,FXD,CMPSN:3M OHM,5%,0.25W	01121	CB3055
A16R3069	315-0135-00			RES.,FXD,CMPSN:1.3M OHM,5%,0.25W	01121	CB1355
A16R4015	315-0105-00			RES.,FXD,CMPSN:1M OHM,5%,0.25W	01121	CB1055
A16R4025	315-0302-00			RES.,FXD,CMPSN:3K OHM,5%,0.25W	01121	CB3025
A16R4041	315-0335-00			RES.,FXD,CMPSN:3.3M OHM,5%,0.25W	01121	CB3355
A16R4042	315-0474-00			RES.,FXD,CMPSN:470K OHM,5%,0.25W	01121	CB4745
A16R4043	315-0513-00			RES.,FXD,CMPSN:51K OHM,5%,0.25W	01121	CB5135
A16R4044	315-0513-00			RES.,FXD,CMPSN:51K OHM,5%,0.25W	01121	CB5135
A16R4051	315-0335-00			RES.,FXD,CMPSN:3.3M OHM,5%,0.25W	01121	CB3355
A16R4052	315-0335-00			RES.,FXD,CMPSN:3.3M OHM,5%,0.25W	01121	CB3355
A16R4053	315-0624-00			RES.,FXD,CMPSN:620K OHM,5%,0.25W	01121	CB6245
A16R4054	315-0125-00			RES.,FXD,CMPSN:1.2M OHM,5%,0.25W	01121	CB1255
A16R4055	315-0513-00			RES.,FXD,CMPSN:51K OHM,5%,0.25W	01121	CB5135
A16R4056	315-0513-00			RES.,FXD,CMPSN:51K OHM,5%,0.25W	01121	CB5135
A16R4057	315-0824-00			RES.,FXD,CMPSN:820K OHM,5%,0.25W	01121	CB8245
A16R4058	315-0513-00			RES.,FXD,CMPSN:51K OHM,5%,0.25W	01121	CB5135
A16R4061	315-0335-00			RES.,FXD,CMPSN:3.3M OHM,5%,0.25W	01121	CB3355
A16R4062	315-0335-00			RES.,FXD,CMPSN:3.3M OHM,5%,0.25W	01121	CB3355
A16R4063	316-0156-00			RES.,FXD,CMPSN:15M OHM,10%,0.25W	01121	CB1561
A16R4064	315-0513-00			RES.,FXD,CMPSN:51K OHM,5%,0.25W	01121	CB5135
A16R4065	315-0513-00			RES.,FXD,CMPSN:51K OHM,5%,0.25W	01121	CB5135
A16R4066	315-0914-00			RES.,FXD,CMPSN:910K OHM,5%,0.25W	01121	CB9145
A16R4067	315-0513-00			RES.,FXD,CMPSN:51K OHM,5%,0.25W	01121	CB5135
A16R4068	315-0513-00			RES.,FXD,CMPSN:51K OHM,5%,0.25W	01121	CB5135
A16S3013	260-2064-00			SWITCH,ROCKER:(6)SPST,125MA,30VDC	81073	76YY2759S
A16TP2010	214-0579-00			TERM,TEST POINT:BRS CD PL	80009	214-0579-00

Scan by Zenith

Component No.	Tektronix Part No.	Serial/Model No. Eff	Dscont	Name & Description	Mfr Code	Mfr Part Number
A16TP3031	214-0579-00			TERM,TEST POINT:BRS CD PL	80009	214-0579-00
A16TP3032	214-0579-00			TERM,TEST POINT:BRS CD PL	80009	214-0579-00
A16TP3033	214-0579-00			TERM,TEST POINT:BRS CD PL	80009	214-0579-00
A16U1020	156-1415-01			MICROCIRCUIT,DI: OCTAL GPIB XCVR-MANAGEMENT	27014	DS75161A
A16U1031	156-1277-00			MICROCIRCUIT,DI:3 STATE OCTAL BFR	27014	DM81LS95
A16U1044	156-1277-00			MICROCIRCUIT,DI:3 STATE OCTAL BFR	27014	DM81LS95
A16U1060	156-0030-03			MICROCIRCUIT,DI:QUAD 2-INP NAND GATE,SCRN	01295	SN7400(NP3 OR JP
A16U2021	156-1414-02			MICROCIRCUIT,DI: OCTAL GPIB BUS XCVR	27014	DS75160A
A16U2022	156-1444-01			MICROCIRCUIT,DI:NMOS,GPIB ADAPTER	01295	TMS9914NL
A16U2032	156-0913-02			MICROCIRCUIT,DI:OCTAL D FF,BURN-IN	04713	SN74LS377NDS
A16U2034	156-0469-02			MICROCIRCUIT,DI:3/8 LINE DCDR	01295	SN74LS138NP3
A16U2035	156-1225-01			MICROCIRCUIT,LI:DUAL COMPARATOR,SCREENED	27014	LM393N/A+
A16U2045	156-0513-00			MICROCIRCUIT,DI:8-CHAN MUX	80009	156-0513-00
A16U2046	156-0513-00			MICROCIRCUIT,DI:8-CHAN MUX	80009	156-0513-00
A16U2050	156-1435-00			MICROCIRCUIT,LI:A/D CONV,3.5 DIGIT	32293	ICL7107CPL
A16U3023	156-1277-00			MICROCIRCUIT,DI:3 STATE OCTAL BFR	27014	DM81LS95
A16U3030	156-0385-02			MICROCIRCUIT,DI:HEX INVERTER	01295	SN74LS04
A16U3033	156-1408-01			MICROCIRCUIT,LI:TIMER,SCREENED	32293	ICM7555/883-B 1P
A16U3034	156-1461-01			MICROCIRCUIT,DI:1024 X 4 SCRAM,SCRN	80009	156-1461-01
A16U3040	156-1245-00			MICROCIRCUIT,LI:7 XSTR,HV/HIGH CUR	04713	MC1413PDS
A16U3041	156-0913-02			MICROCIRCUIT,DI:OCTAL D FF,BURN-IN	04713	SN74LS377NDS
A16U3043	156-1461-01			MICROCIRCUIT,DI:1024 X 4 SCRAM,SCRN	80009	156-1461-01
A16U3050	156-0495-02			MICROCIRCUIT,LI:QUAD OPNL AMPL,SELECTED	01295	LM324J4
A16U3051	156-0495-02			MICROCIRCUIT,LI:QUAD OPNL AMPL,SELECTED	01295	LM324J4
A16U3062	156-0495-02			MICROCIRCUIT,LI:QUAD OPNL AMPL,SELECTED	01295	LM324J4
A16U4020	156-1342-01			MICROCIRCUIT,DI:MPU,8 BIT W/CLK	07263	F68A08(P OR D)
A16U4030	160-2000-00			MICROCIRCUIT,DI:8192 X 8 EPROM	80009	160-2000-00
A16Y3024	158-0224-00			XTAL UNIT,QTZ:4.0MHZ,0.1%	34630	OBD

Scan by Zenith

Component No.	Tektronix Part No.	Serial/Model No. Eff	Dscont	Name & Description	Mfr Code	Mfr Part Number
				CHASSIS PARTS		
C500	283-0077-00			CAP.,FXD,CER DI:330PF,5%,500V	59660	831-500B331J
C530	283-0076-00			CAP.,FXD,CER DI:27PF,10%,500V	59660	831-500S2L27OK
C540	283-0076-00			CAP.,FXD,CER DI:27PF,10%,500V	59660	831-500S2L27OK
J500	131-1315-01			CONN,RCPT,ELEC:BNC,FEMALE	24931	28JR 306-1
J510	131-0955-00			CONN,RCPT,ELEC:BNC,FEMALE	13511	31-279
J520	131-0955-00			CONN,RCPT,ELEC:BNC,FEMALE	13511	31-279
W500	175-3261-00			CA ASSY,SP,ELEC:9,26 AWG,10.0 L,RIBBON	80009	175-3261-00
W500	----- -----			(FROM A12J1031 TO A14J1060)		
W510	175-3262-00			CA ASSY,SP,ELEC:9,26 AWG,8.0 L,RIBBON	80009	175-3262-00
W510	----- -----			(FROM A10J2040 TO A12J1091)		
W520	175-3262-00			CA ASSY,SP,ELEC:9,26 AWG,8.0 L,RIBBON	80009	175-3262-00
W520	----- -----			(FROM A12J1072 TO A15J1011)		
W530	175-3264-00			CA ASSY,SP,ELEC:5,26 AWG,7.0 L,RIBBON	80009	175-3264-00
W530	----- -----			(FROM A10J2011 TO A12J1181)		
W540	175-3374-01			CABLE ASSY,RF:50 OHM COAX,6.0 L	80009	175-3374-01
W540	----- -----			(FROM A13J8011 TO A14J1041)		
W550	175-7212-00			CA ASSY,SP,ELEC:5,26 AWG,4.0 L	80009	175-7212-00
W550	----- -----			(FROM A12J1141 TO A14J1071)		
W560	175-3636-01			CA ASSY,SP,ELEC:2,26 AWG,14.0 L	80009	175-3636-01
W560	----- -----			(FROM A12J7171 TO A15J1061)		
W570	175-5136-00			CA ASSY,SP,ELEC:10,26 AWG,5.0 L,RIBBON	80009	175-5136-00
W570	----- -----			(FROM A10J2012 TO A16J3060)		
W580	175-5137-00			CA ASSY,SP,ELEC:34,28 AWG,8.5 L,RIBBON	22526	OBD
W580	----- -----			(FROM A10J2030 TO A16J2050)		
W585	175-6025-00			CA ASSY,SP,ELEC:6,26 AWG,13.0 L,RIBBON	80009	175-6025-00
W585	----- -----			(FROM A15J1012 TO A16J2034)		
W590	198-4299-01			WIRE SET, ELEC:	80009	198-4299-01
W590	----- -----			(FROM A15J1020 TO J500,J510 & J520)		
W600	175-3261-00			CA ASSY,SP,ELEC:9,26 AWG,10.0 L,RIBBON	80009	175-3261-00
W600	----- -----			(FROM A12J1051 TO A14J1030)		

Scan by Zenith

DIAGRAMS AND CIRCUIT BOARD ILLUSTRATIONS

Symbols

Graphic symbols and class designation letters are based on ANSI Standard Y32.2-1975.

Logic symbology is based on ANSI Y32.14-1973 in terms of positive logic. Logic symbols depict the logic function performed and may differ from the manufacturer's data.

The overline on a signal name indicates that the signal performs its intended function when it is in the low state.

Abbreviations are based on ANSI Y1.1-1972.

Other ANSI standards that are used in the preparation of diagrams by Tektronix, Inc. are:

Y14.15, 1966	Drafting Practices.
Y14.2, 1973	Line Conventions and Lettering.
Y10.5, 1968	Letter Symbols for Quantities Used in Electrical Science and Electrical Engineering.

American National Standard Institute
1430 Broadway
New York, New York 10018

Component Values

Electrical components shown on the diagrams are in the following units unless noted otherwise:

Capacitors = Values one or greater are in picofarads (pF). Values less than one are in microfarads (μF).
Resistors = Ohms (Ω).

The information and special symbols below may appear in this manual.

Assembly Numbers and Grid Coordinates

Each assembly in the instrument is assigned an assembly number (e.g., A20). The assembly number appears on the circuit board outline on the diagram, in the title for the circuit board component location illustration, and in the lookup table for the schematic diagram and corresponding component locator illustration. The Replaceable Electrical Parts list is arranged by assemblies in numerical sequence; the components are listed by component number *(see following illustration for constructing a component number).

The schematic diagram and circuit board component location illustration have grids. A lookup table with the grid coordinates is provided for ease of locating the component. Only the components illustrated on the facing diagram are listed in the lookup table. When more than one schematic diagram is used to illustrate the circuitry on a circuit board, the circuit board illustration may only appear opposite the first diagram on which it was illustrated; the lookup table will list the diagram number of other diagrams that the circuitry of the circuit board appears on.

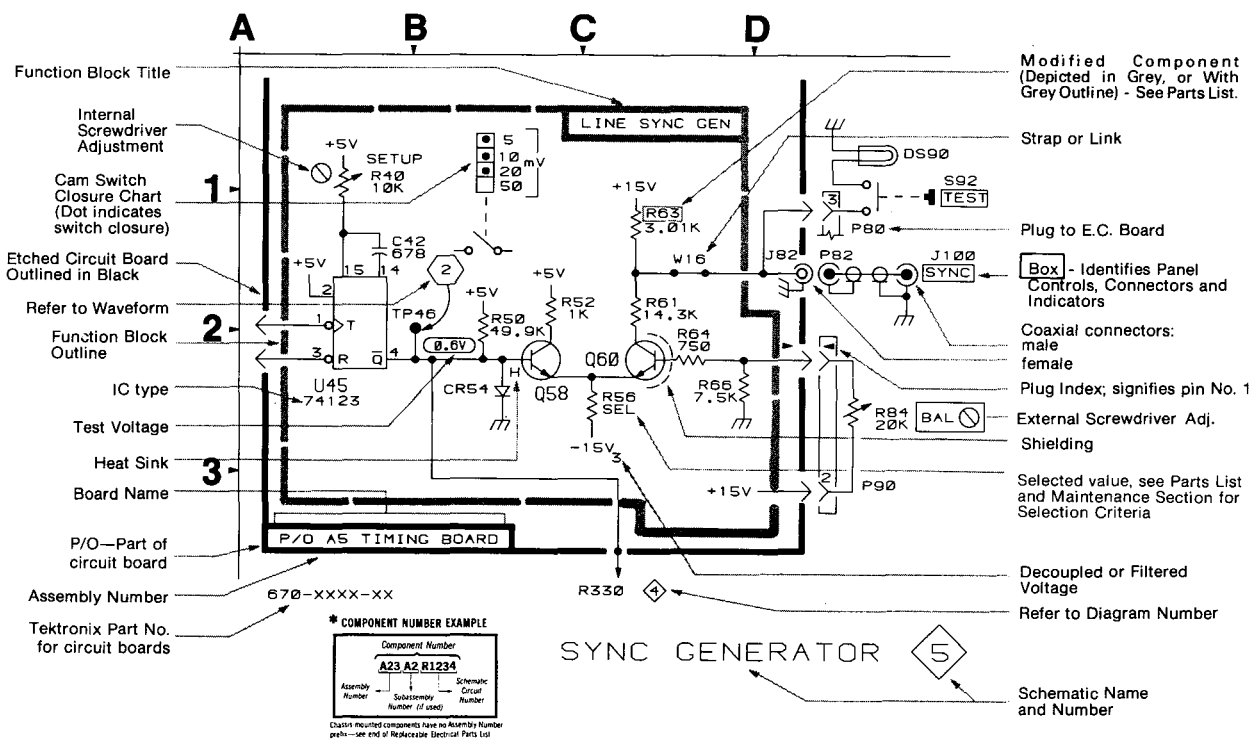

Scan by Zenith

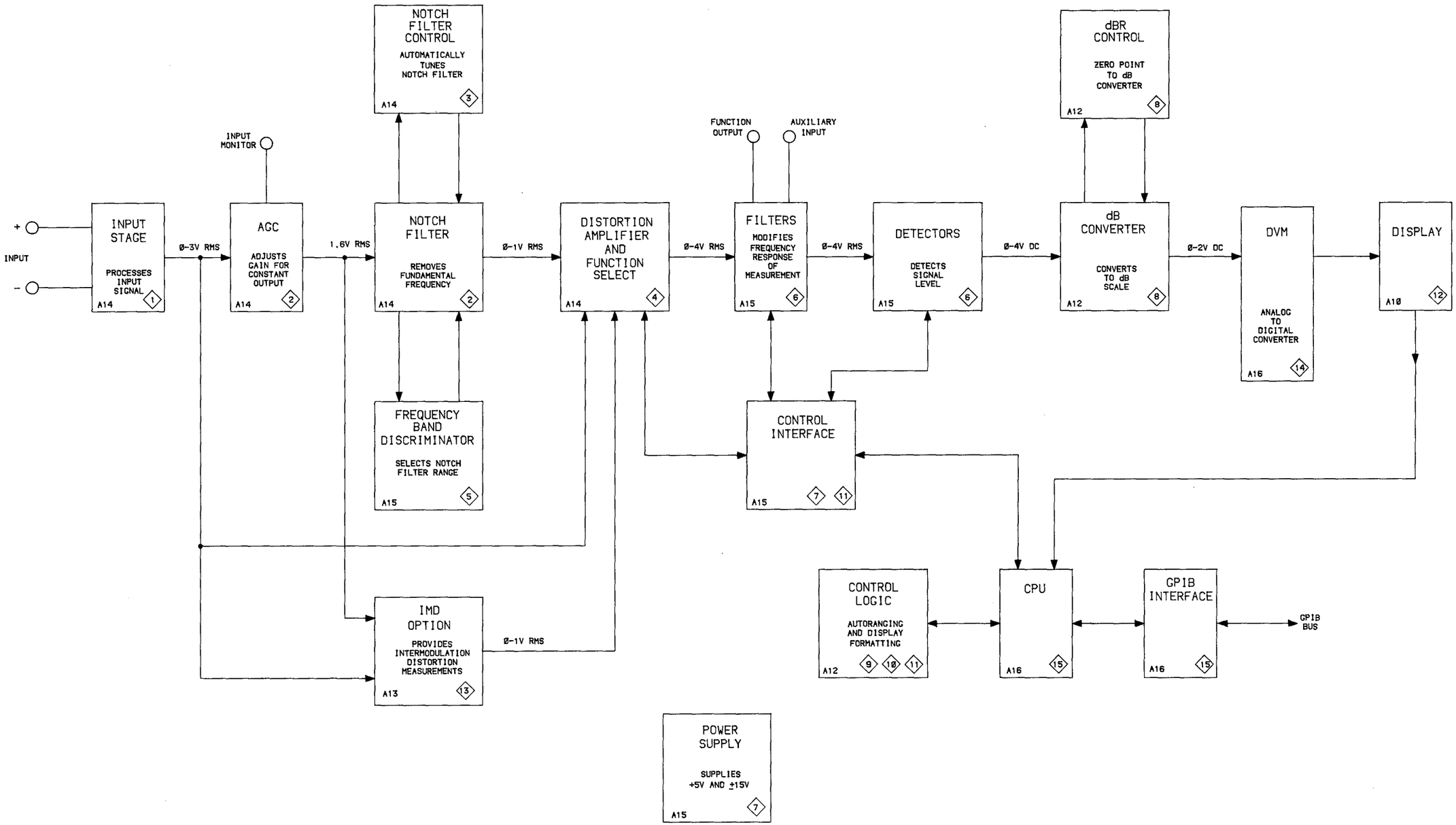

BLOCK DIAGRAM

AA 5001

4598-71

BLOCK DIAGRAM

Scan by Zenith

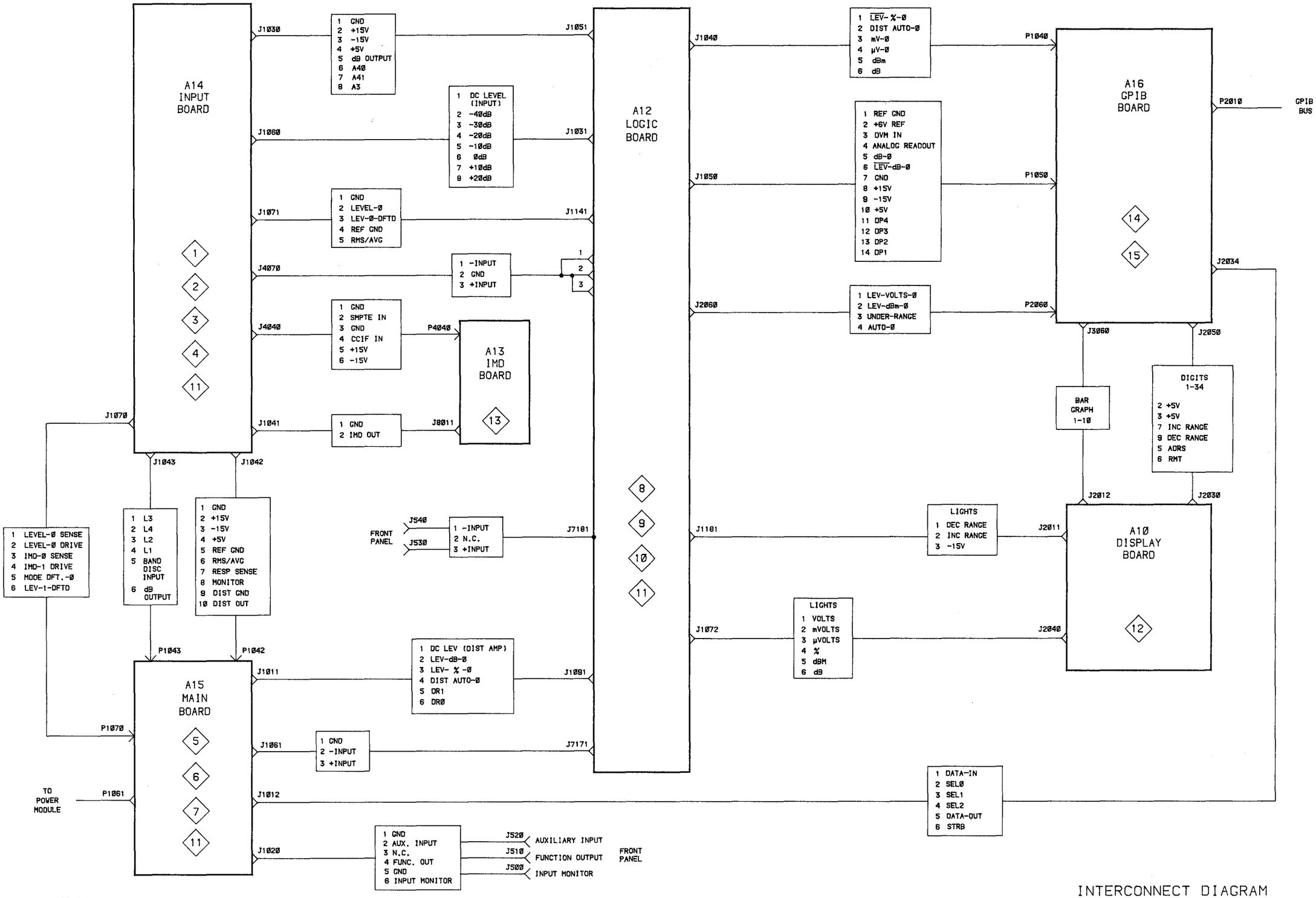

AA 5001

INTERCONNECT DIAGRAM

4598-72

INTERCONNECT DIAGRAM

Scan by Zenith

PARTS LOCATION GRID

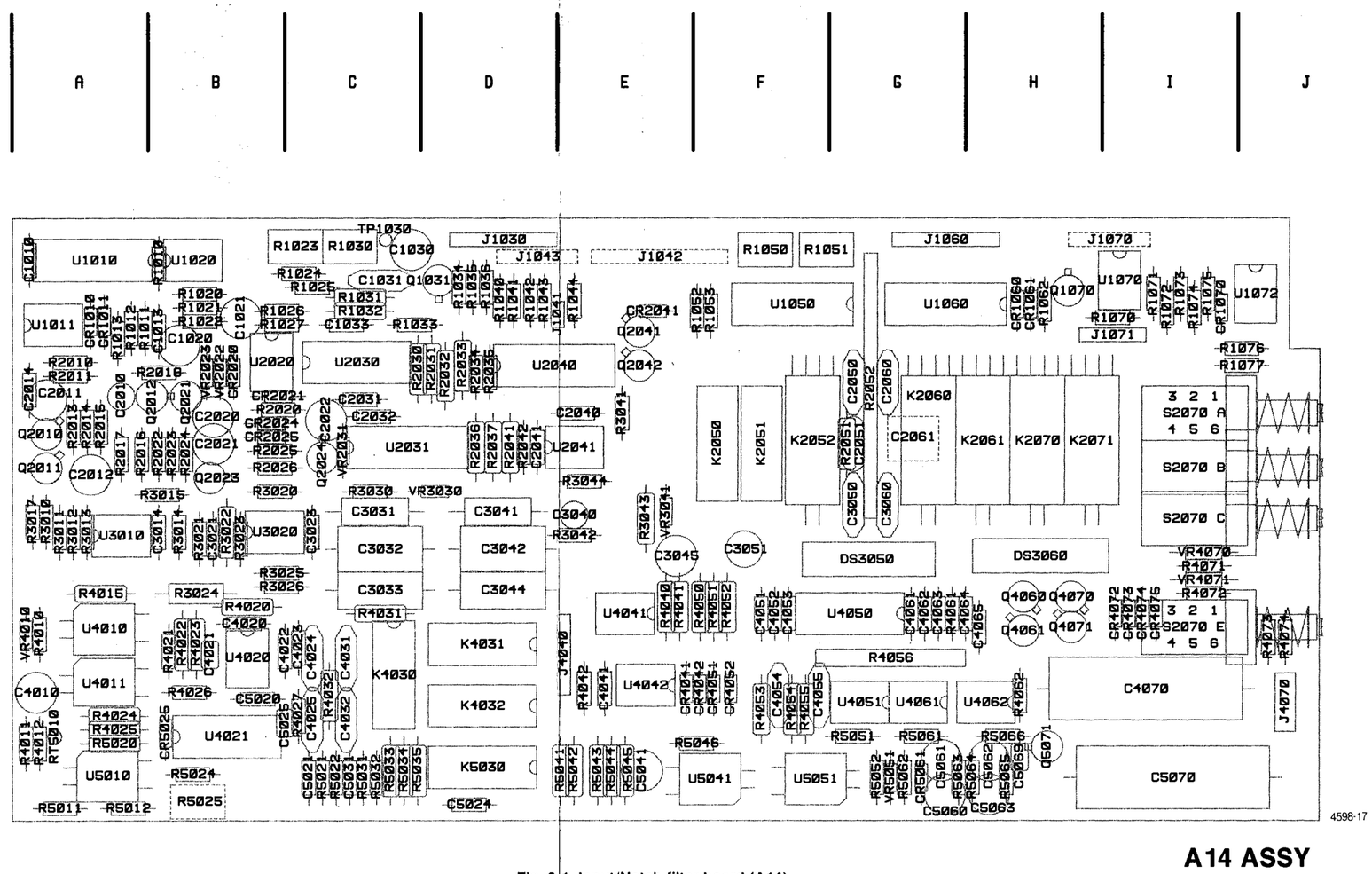

Fig. 9-1. Input/Notch filter board (A14).

INPUT/NOTCH FILTER BD. (A14)
COMPONENT LOCATIONS

Static Sensitive Devices
See Maintenance Section

COMPONENT NUMBER EXAMPLE

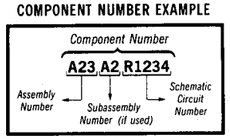

Chassis-mounted components have no Assembly Number prefix—see end of Replaceable Electrical Parts List.

Scan by Zenith

Table 9-1
COMPONENT REFERENCE CHART

P/O A14 ASSY — INPUT AMPLIFIER (1)

CIRCUIT NUMBER	SCHEMATIC LOCATION	BOARD LOCATION
C2050	C4	G2
C2051	C2	G2
C2060	C4	G2
C2061	C3	G2
C3045	M3	E3
C3050	C1	G3
C3051	L1	F3
C3060	C1	G3
C4051	L6	F4
C4052	J1	F4
C4053	I2	F4
C4061	K2	G4
C4062	I4	G4
C4063	J7	G4
C4064	K2	H4
C4065	L7	H4
C4070	C4	I4
C5070	C1	I5
CR1060	D8	H1
CR1061	D7	H1
CR4041	M3	E4
CR4042	L3	F4
CR4072	G1	I4
CR4073	G1	I4
CR4074	G4	I4
CR4075	G4	I4
DS3050	D1	G3
DS3060	D4	H3
J1042	N4	E1
J1060	B5	G1
J1060	N2	G1
J4070	B1	J4
K2050	I7	F2
K2051	H7	F2
K2052	F6	F2
K2060	E6	G2
K2061	E6	H2
K2070	E6	H2
K2071	D5	H2
P1060	B5	G1
P1060	N2	G1
P4070	B1	J4
Q1070	D7	H4
Q4060	G3	H3
Q4061	G3	H4
Q4070	G3	H3
Q4071	G3	H4
R1062	D7	H1
R2051	C2	G2
R2052A	D1	G2
R2052B	D1	G2
R2052C	D2	G2
R2052D	D2	G2
R2052E	D2	G2
R2052F	D3	G2
R2052G	D3	G2
R2052H	D3	G2
R2052I	D4	G2
R2052J	D4	G2
R4040	M3	E3
R4041	M3	E4
R4050	L2	E3
R4051	L3	F4
R4052	K3	F4
R4056A	K2	E4
R4056B	J4	E4
R4056C	I4	E4
R4056D	I2	E4
R4056E	H2	E4
R4056F	I2	E4
R4056H	J1	E4
R4056J	J1	E4
R4061	K1	G4
R4071	H3	I3
R4072	F3	I3
R4073	C1	J4
R4074	C4	J4
R5061	K1	G4
U1050B	E8	F1
U1060	C5	G1
U4041	L3	E3
U4042A	M2	E4
U4050A	I5	F3
U4050B	I1	F3
U4061	K1	G4
VR3041	M4	E3
VR4070	H3	I3
VR4071	F3	I3
W500	B5	CHASSIS
W500	O2	CHASSIS
W800	B1	CHASSIS

P/O A14 ASSY also shown on (2) (4) (5) (10)

Scan by Zenith

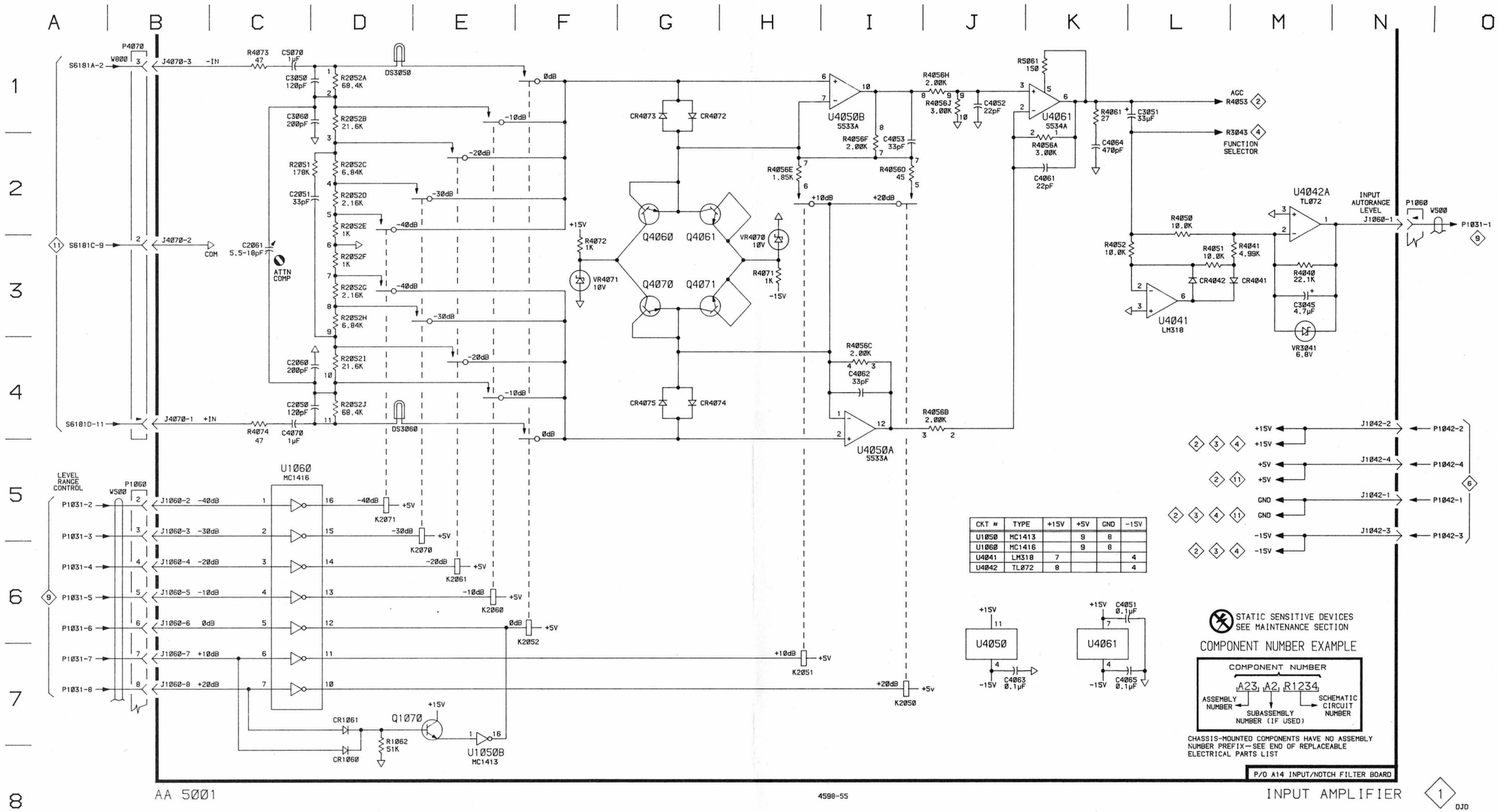

CKT #	TYPE	+15V	+5V	GND	-15V
U1050	MC1413		9	8	
U1060	MC1416		9	8	
U4041	LM318	7			4
U4042	TL072	8			4

Scan by Zenith

Table 9-2
COMPONENT REFERENCE CHART

P/O A14 ASSY — AGC & NOTCH FILTER (2)

CIRCUIT NUMBER	SCHEMATIC LOCATION	BOARD LOCATION	CIRCUIT NUMBER	SCHEMATIC LOCATION	BOARD LOCATION
C3021	K10	B3	R4022	D4	B4
C3031	F3	C3	R4023	D5	B4
C3032	F3	C3	R4024	H8	A4
C3033	F3	C3	R4025	H8	A4
C3041	E3	D3	R4026	G7	B4
C3042	E4	D3	R4027	H5	C4
C3044	E4	D3	R4031	G4	C3
C4020	K10	B4	R4032	G4	C4
C4021	E5	B4	R4042	G10	E4
C4022	H5	C4	R4053	C8	F4
C4023	G5	C4	R4054	D7	F4
C4024	E4	C4	R4055	C8	F4
C4025	F2	C4	R4062	F9	H4
C4031	E5	C4	R5011	H7	A5
C4032	F3	C4	R5012	H7	A5
C4041	D8	E4	R5020	G8	A4
C4054	C7	F4	R5021	F7	C5
C4055	D7	F4	R5022	I5	C5
C5020	K9	B4	R5024	I7	B5
C5021	F7	C5	R5025	J7	B5
C5024	I5	D5	R5031	H5	C5
C5025	G7	C4	R5032	E7	C5
C5031	F7	C5	R5033	F6	C5
C5041	E8	E5	R5034	F8	C5
C5060	E10	G5	R5035	F7	D5
C5061	F10	G5	R5041	G10	E5
C5062	E10	H5	R5042	F9	E5
C5063	C10	H5	R5043	E8	E5
C5069	C9	H5	R5044	E9	E5
			R5045	F9	E5
CR4051	F9	F4	R5046	D8	E4
CR4052	F9	F4	R5051	D7	G4
CR5061	F9	G5	R5052	B9	G5
			R5062	C9	G5
J1042	B7	E1	R5063	F10	G5
J1043	B1	D1	R5064	E10	H5
J1043	L6	D1	R5065	D10	H5
J4040	B5	E4	R5066	F10	H4
K4030	G1	C4	RT5010	H8	A4
K4031	E2	D4			
K4032	E2	D4	U1050A	C1	F1
K5030	F1	D5	U3010A	J4	A3
			U3020A	K6	B3
Q5071	C10	H4	U3020B	K8	B3
			U4010	B5	A4
R1044	C7	E1	U4011	I7	A4
R1051	H10	F1	U4020	H4	B4
R2026	J6	B2	U4021A	G7	B4
R3020	L8	B3	U4021B	G8	B4
R3021	I6	B3	U4042B	E9	E4
R3022	I5	B3	U4051	D8	G4
R3023	K8	B3	U4062A	F10	H4
R3025	J7	B3	U4062B	D10	H4
R3026	I6	B3	U5010	I7	A5
R4012	H8	A5	U5041	C8	F5
R4015	I6	A3	U5051	C8	F5
R4020	I5	B3			
R4021	C5	B4	VR5051	B10	G5

P/O A14 ASSY also shown on (1) (4) (5) (10)

Scan by Zenith

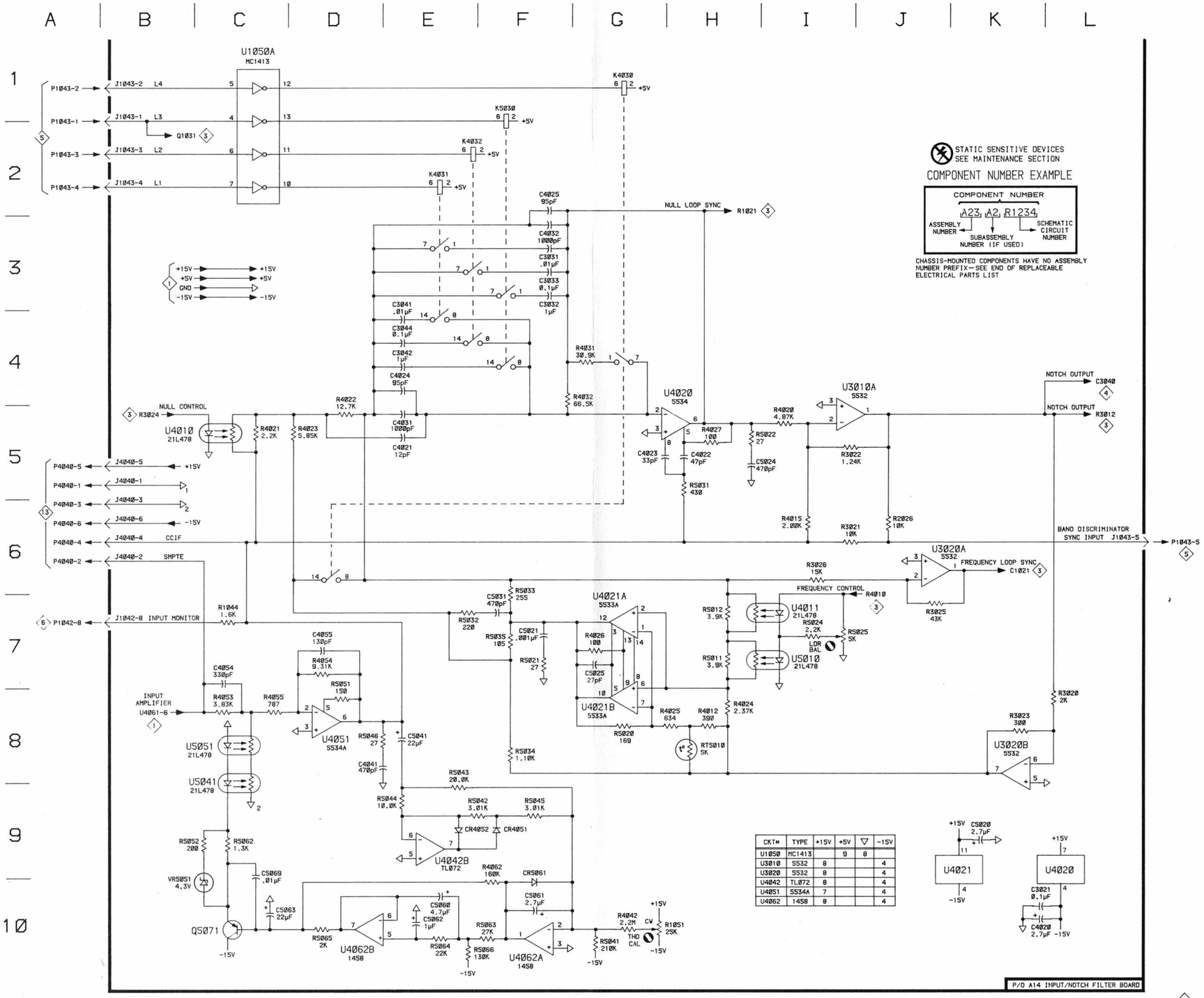

CKT#	TYPE	+15V	+5V	▽	-15V
U1050	MC1413		9	8	
U3010	5532	8			4
U3020	5532	8			4
U4042	TL072	8			4
U4051	5534A	7			4
U4062	1458	8			4

Scan by Zenith

Table 9-3
COMPONENT REFERENCE CHART

P/O A14 ASSY — NOTCH FILTER CONTROL 3

CIRCUIT NUMBER	SCHEMATIC LOCATION	BOARD LOCATION	CIRCUIT NUMBER	SCHEMATIC LOCATION	BOARD LOCATION
C1010	G1	A1	R1026	I3	B1
C1013	I4	B1	R1027	I3	B1
C1020	E3	B1	R1030	H3	C1
C1021	E2	B2	R1034	C4	D1
C2010	H5	A2	R1043	C4	D1
C2011	C6	A2	R2010	F5	A2
C2012	D6	A2	R2011	E5	A2
C2014	E5	A2	R2013	E6	A2
C2020	J3	B2	R2014	C6	A2
C2021	K5	B2	R2015	E5	A2
C2022	K4	C2	R2016	D5	A2
C3014	C5	B3	R2017	C5	A2
C3023	L5	C3	R2018	I5	A2
C4010	K6	A4	R2020	J4	B2
			R2022	K5	B2
CR1010	G6	A1	R2023	C5	B2
CR1011	F6	A1	R2024	C4	B2
CR2020	J2	B2	R2025	K6	B2
CR2021	J5	B2	R3010	B5	A3
CR2024	K4	B2	R3011	C5	A3
CR2025	K4	B2	R3012	B6	A3
CR5025	M7	B4	R3013	C7	A3
			R3014	K6	B3
Q1031	C4	D1	R3015	K4	A3
Q2010	D7	A2	R3017	C6	A3
Q2011	B6	A2	R3024	K3	B3
Q2012	D5	A2	R4010	L7	A4
Q2021	J3	B2	R4011	K7	A5
Q2023	L4	B2			
Q2024	L6	C2	U1010	G1	A1
			U1011A	F5	A1
R1010	F3	B1	U1011B	E6	A1
R1011	I5	B1	U1020A	F3	B1
R1012	I3	A1	U1020B	F2	B1
R1013	I4	A2	U2020A	J3	B2
R1020	E2	B1	U2020B	J6	B2
R1021	E3	B1	U3010B	C6	A3
R1022	F4	B1			
R1023	I6	B1	VR2022	I5	B2
R1024	I6	B1	VR2023	J5	B2
R1025	J6	C1	VR4010	L7	A4

P/O A14 ASSY also shown on 1 2 5 10

Scan by Zenith

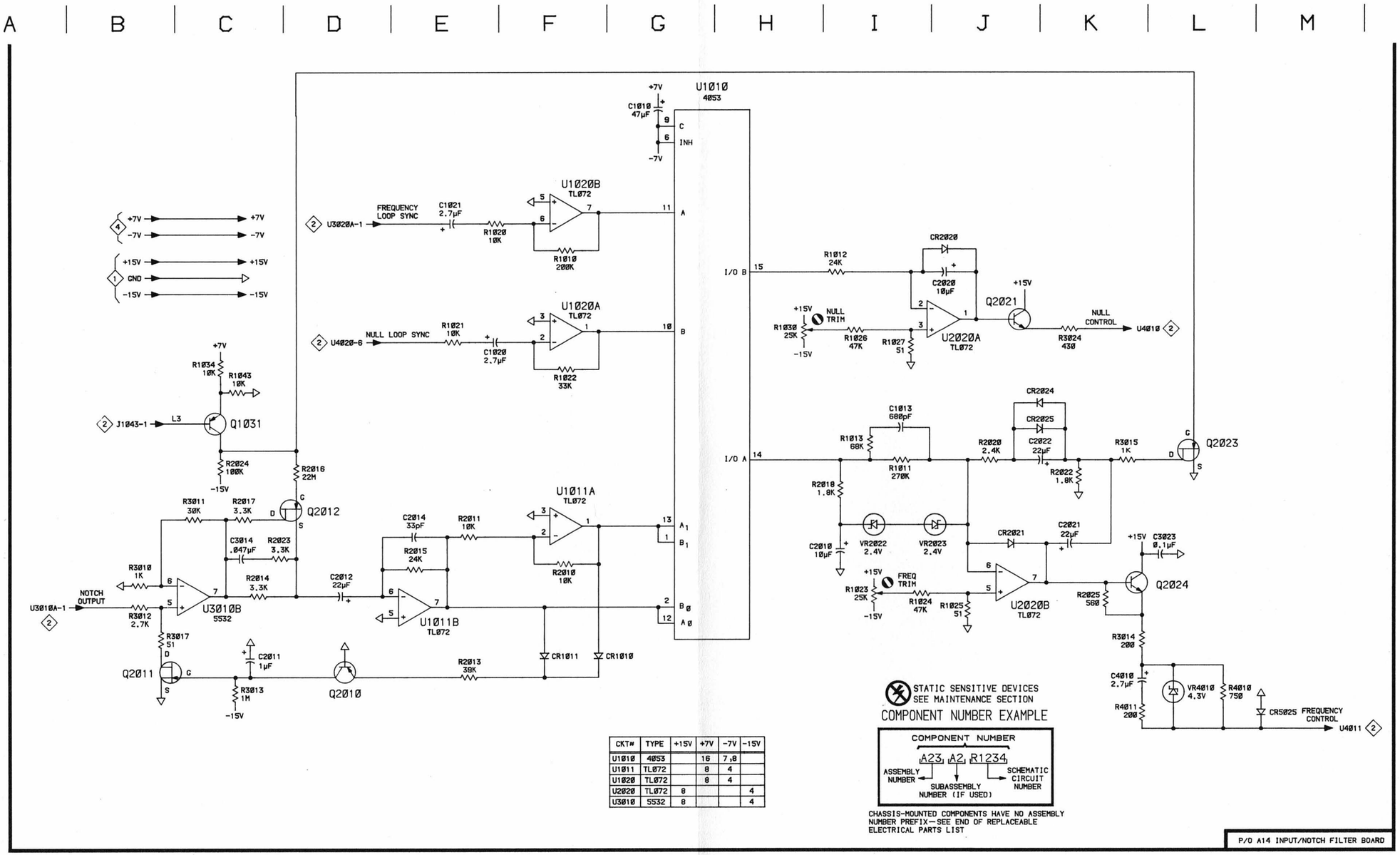

CKT#	TYPE	+15V	+7V	-7V	-15V
U1010	4053		16	7,8	
U1011	TL072		8	4	
U1020	TL072		8	4	
U2020	TL072	8			4
U3010	5532	8			4

AA 5001

4598-57
REV MAY 1984

NOTCH FILTER CONTROL 3 DJD

NOTCH FILTER CONTROL 3

Scan by Zenith

Table 9-4
COMPONENT REFERENCE CHART

P/O A14 ASSY — FUNCTION SELECTION & DISTORTION AMPLIFIER ◇4

CIRCUIT NUMBER	SCHEMATIC LOCATION	BOARD LOCATION	CIRCUIT NUMBER	SCHEMATIC LOCATION	BOARD LOCATION
C1030	K3	C1	R1052	D3	F1
C1031	L4	C1	R1053	D4	F1
C1033	H6	C1	R2030	J4	D2
C2031	H7	C2	R2031	J4	D2
C2032	E6	C2	R2032	E2	D2
C2040	G1	D2	R2033	E2	D2
C2041	H1	D2	R2034	E1	D2
C3040	D3	D3	R2035	D6	D2
			R2036	H3	D2
CR2041	D1	E1	R2037	H2	D2
			R2041	H2	D2
J1030	B5	D1	R2042	H1	D2
J1041	B2	E1	R3030	D7	C3
J1042	M3	E1	R3041	D3	E2
J1043	C8	D1	R3042	D3	D3
J1070	B4	I1	R3043	D2	E3
			R3044	G3	E2
P1030	B5	D1			
P1041	B2	E1	TP1030	K3	C1
Q2041	E2	E1	U2030A	L3	C2
Q2042	E3	E2	U2030B	J3	C2
			U2031	I1	C2
R1031	K3	C1	U2040	F1	D2
R1032	L4	C1	U2041	G2	D2
R1033	K3	C1			
R1035	H5	D1	VR2031	D6	C2
R1036	H5	D1	VR3030	D7	D2
R1040	D4	D1			
R1041	D5	D1	W540	B2	CHASSIS
R1042	C3	D1	W600	B5	CHASSIS
R1050	F3	F1			

P/O A14 ASSY also shown on ◇1 ◇2 ◇4 ◇10

Scan by Zenith

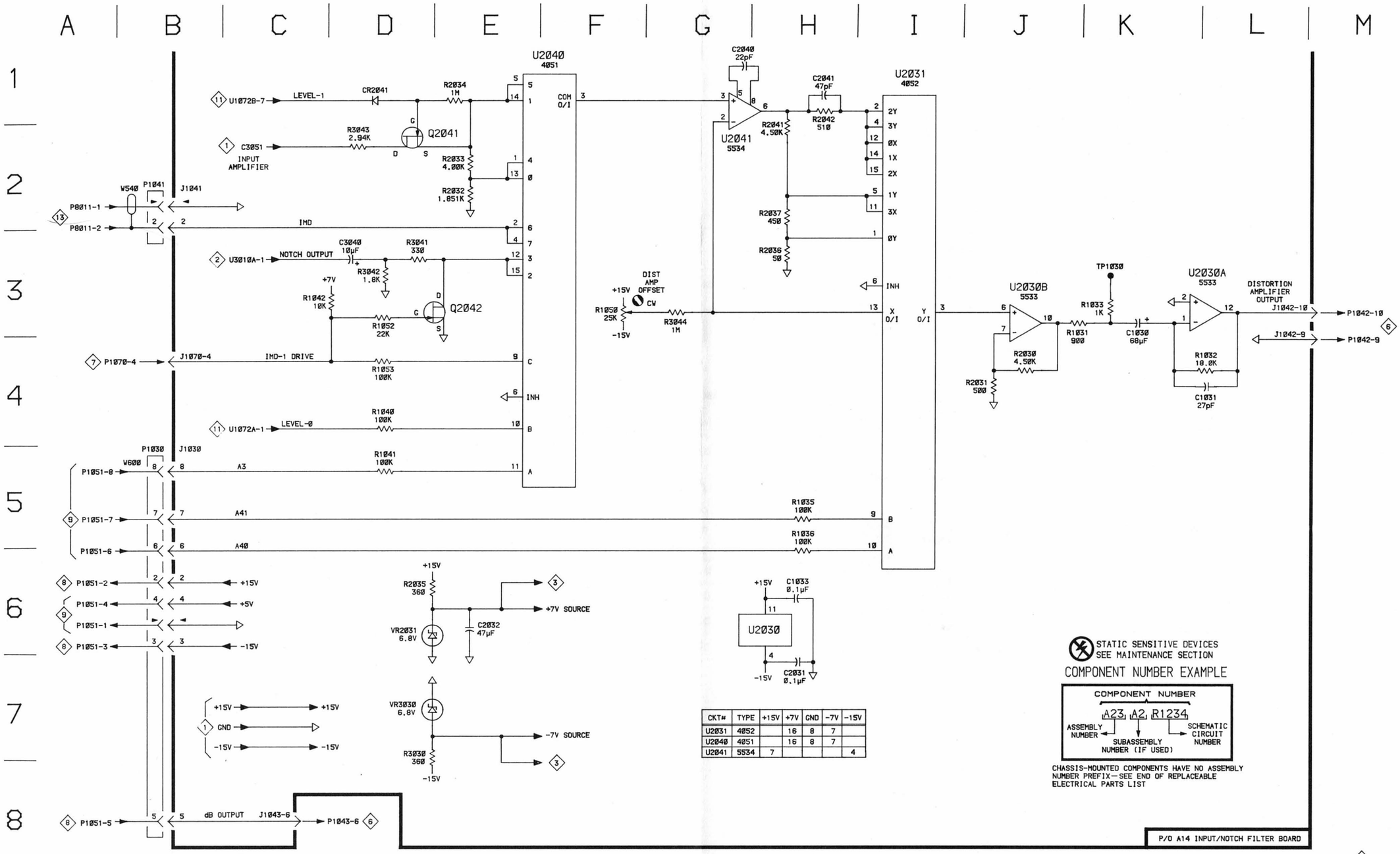

CKT#	TYPE	+15V	+7V	GND	-7V	-15V
U2031	4052		16	8	7	
U2040	4051		16	8	7	
U2041	5534	7				4

AA 5001

4598-58

FUNCTION SELECTOR & DISTORTION AMPLIFIER

4

DJD

FUNCTION SELECTOR & DISTORTION AMPLIFIER

4

Scan by Zenith

PARTS LOCATION GRID

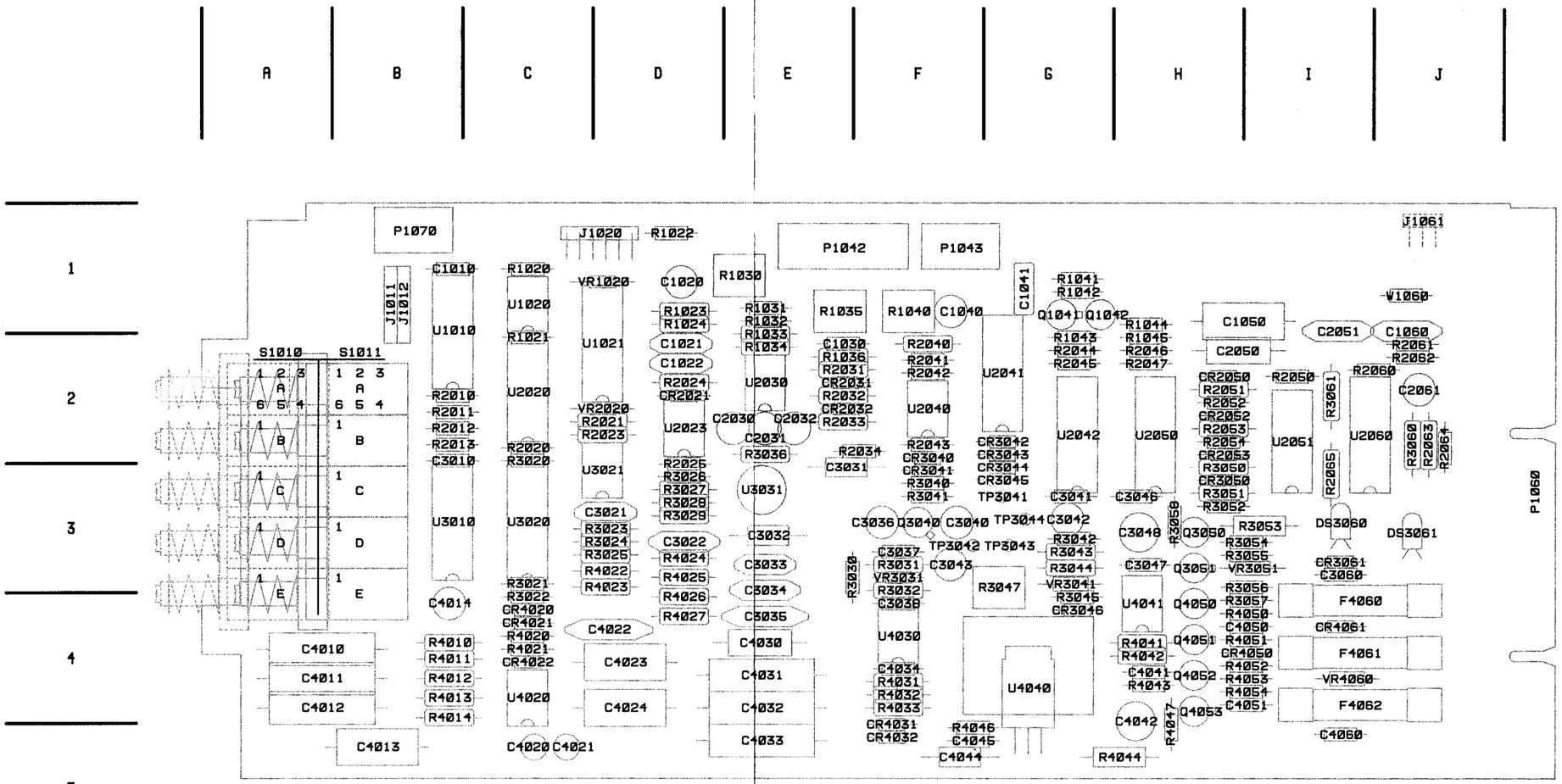

MAIN BOARD (A15)
COMPONENT LOCATIONS

Fig. 9-2. Main board (A15).

A15 ASSY

Static Sensitive Devices
See Maintenance Section

COMPONENT NUMBER EXAMPLE

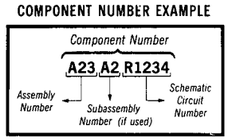

Chassis-mounted components have no Assembly Number prefix—see end of Replaceable Electrical Parts List.

Scan by Zenith

Table 9-5
COMPONENT REFERENCE CHART

P/O A15 ASSY — FREQUENCY BAND DISCRIMINATOR 5

CIRCUIT NUMBER	SCHEMATIC LOCATION	BOARD LOCATION	CIRCUIT NUMBER	SCHEMATIC LOCATION	BOARD LOCATION
C1041	K6	G1	R2045	J3	G2
C1050	F7	H1	R2046	J7	H2
C1060	F3	J2	R2047	J1	H2
C2050	F5	H2	R2050	F1	I2
C2051	F1	I2	R2051	F1	H2
C2061	C1	J2	R2052	I7	H2
C3041	C4	G3	R2053	F7	H2
C3046	D4	H3	R2054	I5	H2
			R2060	H1	I2
CR2050	F1	H2	R2065	I2	I3
CR2052	F7	H2	R3050	F5	H3
CR2053	F5	H2	R3051	F3	H3
CR3042	K2	F2	R3052	I4	H3
CR3043	K3	F2	R3060	I2	J3
CR3044	K5	F3	R3061	I7	I2
CR3045	K7	F3			
CR3050	F3	H3	U2041	L1	G2
			U2042A	J1	G2
P1043	B2	F1	U2042B	J6	G2
P1043	M2	F1	U2042C	J3	G2
			U2042D	J5	G2
Q1041	C2	G1	U2050A	E5	H2
Q1042	C2	G1	U2050B	E7	H2
			U2050C	E1	H2
R1041	C2	G1	U2050D	E3	H2
R1042	B2	G1	U2051A	I7	I2
R1043	D2	G2	U2051B	I2	I2
R1044	D2	H1	U2051C	I3	I2
R1045	J5	H2	U2051D	I5	I2
R2044	C1	G2	U2060	H1	I2

P/O A15 ASSY also shown on 6 10 13

Scan by Zenith

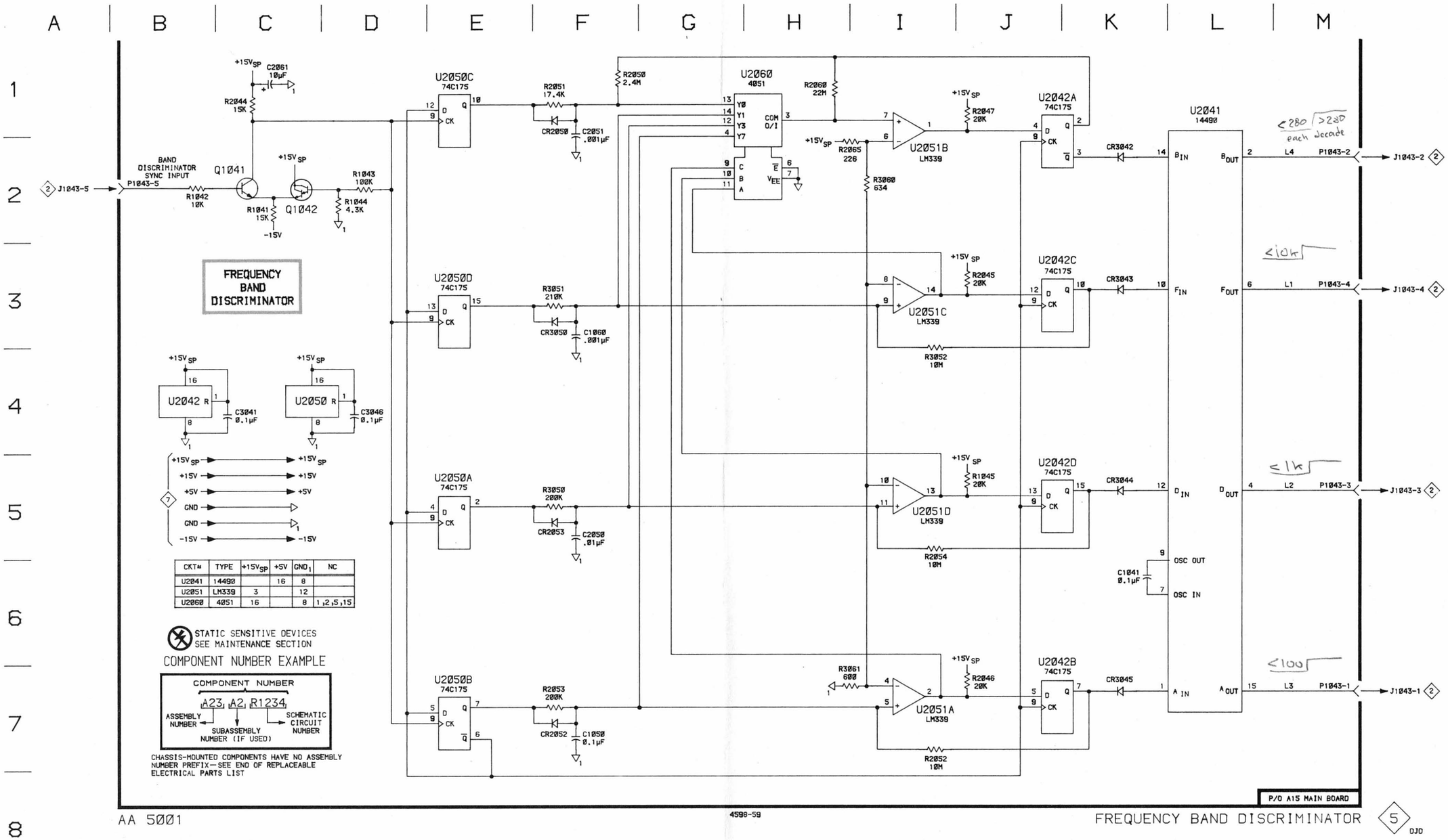

CKT#	TYPE	+15V SP	+5V	GND 1	NC
U2041	14490		16	8	
U2051	LM339	3		12	
U2060	4051	16		8	1,2,5,15

STATIC SENSITIVE DEVICES
SEE MAINTENANCE SECTION

COMPONENT NUMBER EXAMPLE

COMPONENT NUMBER
A23 A2 R1234
ASSEMBLY NUMBER
SUBASSEMBLY NUMBER (IF USED)
SCHEMATIC CIRCUIT NUMBER

CHASSIS-MOUNTED COMPONENTS HAVE NO ASSEMBLY NUMBER PREFIX—SEE END OF REPLACEABLE ELECTRICAL PARTS LIST

AA 5001

4598-59

FREQUENCY BAND DISCRIMINATOR 5 DJD

FREQUENCY BAND DISCRIMINATOR 5

Scan by Zenith

Table 9-6
COMPONENT REFERENCE CHART

P/O A15 ASSY — FILTERS & AC/DC CONVERTERS ◇6

CIRCUIT NUMBER	SCHEMATIC LOCATION	BOARD LOCATION	CIRCUIT NUMBER	SCHEMATIC LOCATION	BOARD LOCATION	CIRCUIT NUMBER	SCHEMATIC LOCATION	BOARD LOCATION
C500	M6	CHASSIS	J1011	G4	B1	R3027	C6	D3
C1020	C5	D1	J1020	L6	D1	R3028	D6	D3
C1021	D6	D2	J1061	C9	J1	R3029	D6	D3
C1022	D6	D2				R3030	E5	F4
C1030	J5	E2	P1011	G4	B1	R3031	E4	F3
C1040	K4	F1	P1020	M6	D1	R3032	F5	F3
C2030	I3	D2	P1042	B5	E1	R3036	I3	E2
C2031	I4	E2	P1042	L5	E1	R3040	K2	F3
C2032	I5	E2	P1042	M1	E1	R3041	L3	F3
C3021	D7	C3	P1043	G3	F1	R4010	H7	B4
C3022	C7	D3	P1060	F2	K3	R4011	I7	B4
C3031	J3	E3	P1060	B9	K3	R4012	H7	B4
C3032	I1	E3	P1060	M1	K3	R4013	I8	B4
C3033	D7	E3	P1060	M6	K3	R4014	I8	B4
C3034	C7	E4	P1060	M8	K3	R4020	L7	C4
C3035	D7	E4	P1061	C9	J1	R4021	K7	C4
C3036	J2	E3				R4022	C7	C3
C3037	E5	F3	Q3040	L3	F3	R4023	B7	C3
C3038	H8	F4				R4024	D8	D3
C3040	L2	F3	R1022	L6	D1	R4025	C8	D3
C3042	E2	G3	R1023	C6	D1	R4026	C8	D4
C3043	F5	F3	R1024	C6	D1	R4027	D8	D4
C4010	H7	A4	R1030	H2	D1	R4031	E5	F4
C4011	H7	A1	R1031	I2	E1	R4032	E4	F4
C4012	H7	A4	R1032	I1	E1	R4033	C4	F4
C4013	I8	B5	R1033	I6	E2			
C4014	K7	B4	R1034	I6	E2	U1021	F6	D2
C4020	B2	C5	R1035	L5	E1	U2023A	E6	D2
C4021	D3	C5	R1036	J5	E2	U2023B	E6	D2
C4022	D7	C4	R1040	L4	F1	U2030A	J5	E2
C4023	C7	D4	R2021	E8	D2	U2030B	J6	E2
C4024	C7	D4	R2023	E8	C2	U2040A	M3	F2
C4030	D8	E4	R2024	D6	D2	U2040B	L4	F2
C4031	D8	E4	R2025	C2	D3	U3020	H5	C3
C4032	C8	E4	R2031	J4	E2	U3021A	E8	C3
C4033	C8	E5	R2032	K5	E2	U3021B	E7	C3
C4034	H8	F4	R2033	K4	E2	U3031	J1	E3
			R2034	J3	E2	U4020A	G7	C4
CR2021	D3	D2	R2040	K4	F2	U4020B	I7	C4
CR2031	K5	E2	R2041	L5	F2	U4030A	F3	F4
CR2032	J5	E2	R2042	L5	F2	U4030B	D5	F4
CR3040	K2	F2	R2043	L2	F2			
CR3041	K2	F3	R2061	L1	J2	VR1020	D2	D1
CR4020	K7	C4	R2062	L1	J2	VR2020	B3	C2
CR4021	K6	C4	R2063	F2	J3	VR3031	F4	F3
CR4022	C3	C4	R2064	F3	J3			
CR4031	D4	F5	R3021	J7	C3	W520	G4	CHASSIS
CR4032	E4	F5	R3022	K7	C4	W560	C9	CHASSIS
			R3023	D7	C3	W590	M6	CHASSIS
J500	N6	CHASSIS	R3024	D7	C3	W590	M7	CHASSIS
J510	N7	CHASSIS	R3025	C7	C3	W1060	L8	J1
J520	N7	CHASSIS	R3026	D3	D3			

P/O A15 ASSY also shown on ◇3 ◇10 ◇13

Scan by Zenith

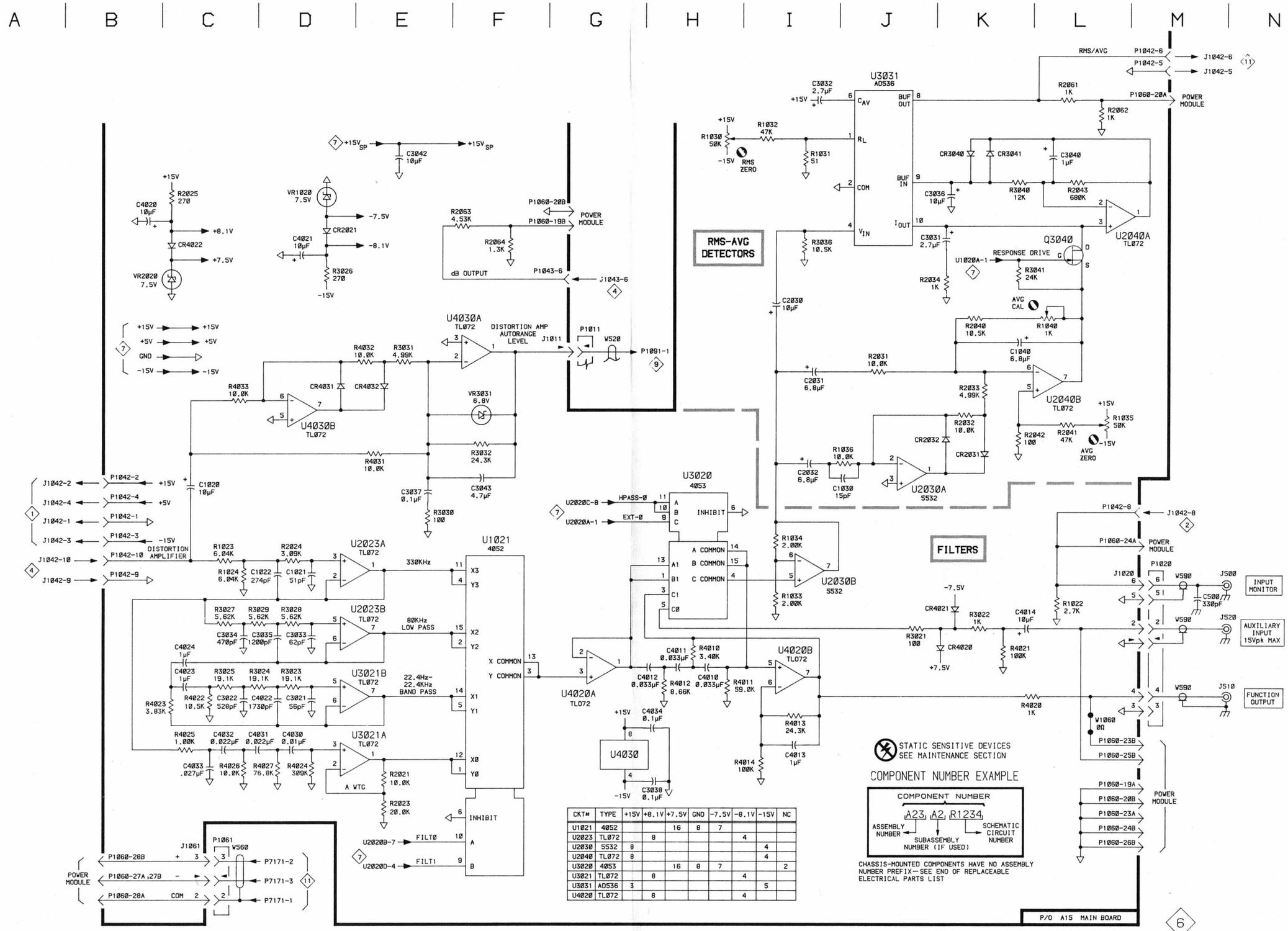

CKT#	TYPE	+15V	+8.1V	+7.5V	GND	-7.5V	-8.1V	-15V	NC
U1021	4052			16	8	7			
U2023	TL072		8				4		
U2030	5532	8						4	
U2040	TL072	8						4	
U3020	4053			16	8	7			2
U3021	TL072		8				4		
U3031	AD536	3						5	
U4020	TL072		8				4		

Scan by Zenith

PARTS LOCATION GRID

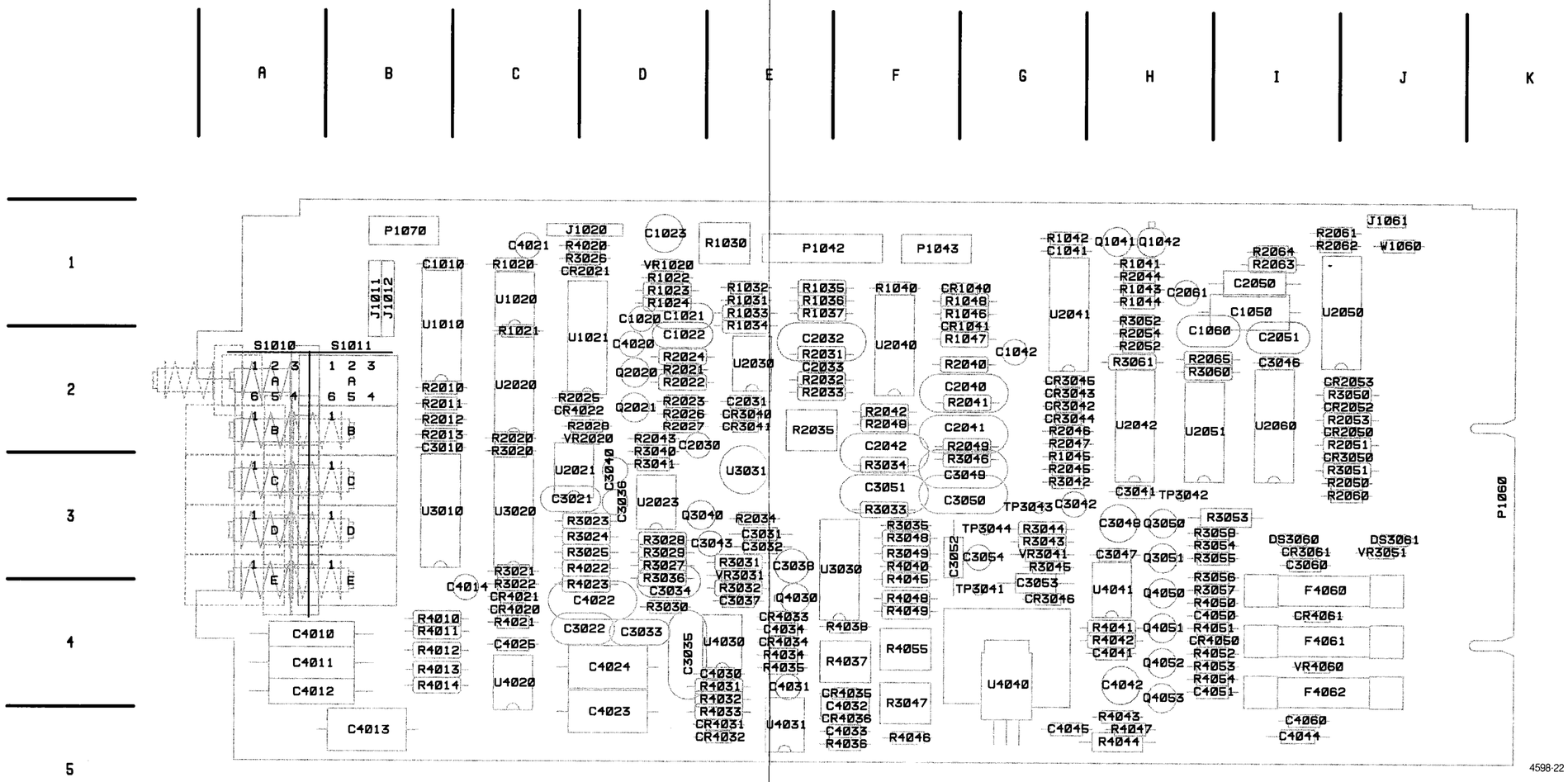

4598-22

Fig. 9-3. Main board, Option 2 (A15).

A15 ASSY

Static Sensitive Devices
See Maintenance Section

COMPONENT NUMBER EXAMPLE

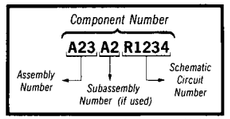

Chassis-mounted components have no Assembly Number prefix—see end of Replaceable Electrical Parts List.

Scan by Zenith

Table 9-7
COMPONENT REFERENCE CHART

P/O A15 ASSY — FILTERS & AC/DC CONVERTERS 6a

CIRCUIT NUMBER	SCHEMATIC LOCATION	BOARD LOCATION
C1020	C4	D1
C1021	D5	D1
C1022	D5	D2
C1023	C1	D1
C1042	H9	G2
C2030	I2	D2
C2031	H7	E2
C2032	B7	E2
C2033	C7	E2
C2040	G8	F2
C2041	G8	F2
C2042	E8	F2
C3021	D6	C3
C3022	C6	C4
C3031	J2	E3
C3032	I1	E3
C3033	D6	D4
C3034	C6	D4
C3035	D6	D4
C3036	K2	D3
C3037	E4	E4
C3038	K3	E3
C3040	L1	D3
C3042	F1	G3
C3043	F4	D3
C3049	F8	F3
C3050	E8	F3
C3051	D8	F3
C3052	L7	G3
C3053	L8	G4
C3054	I8	G3
C4010	H6	B4
C4011	G6	B4
C4012	G6	B4
C4013	H6	B5
C4014	K5	B4
C4020	C1	D2
C4021	D1	C1
C4022	D6	C4
C4023	C6	D5
C4024	C6	D4
C4025	E2	C4
C4030	H10	D4
C4031	K4	E4
C4032	K7	E5
C4033	J9	E5
C4034	J3	E4
CR1040	I10	F1
CR1041	I10	F2
CR2021	E1	C1
CR3040	K1	E2
CR3041	L1	E2
CR4020	K5	C4
CR4021	K5	C4
CR4022	C2	C2
CR4031	D3	D5
CR4032	E3	D5
CR4033	J3	E4
CR4034	J3	E4
CR4035	K8	E4
CR4036	K8	E5
J500	M5	CHASSIS
J510	M6	CHASSIS
J520	M5	CHASSIS
J1011	G3	B1
J1020	L5	D1
J1061	C9	J1
P1011	G3	B1
P1020	M5	D1
P1042	B4	E1
P1042	L4	E1
P1042	M1	E1
P1043	G2	F1
P1060	B10	K2
P1060	F2	K2
P1060	L4	K2
P1060	L6	K2
P1060	M1	K2
P1060	M3	K2
P1061	C9	J1
Q2020	H7	D2
Q2021	H8	D2
Q3040	L2	E3
Q4030	K4	E3
R1022	L5	D1
R1023	C5	D1
R1024	C5	D1
R1030	H1	E1
R1031	I2	E1
R1032	I1	E1
R1033	H5	E1
R1034	I4	E2
R1035	C7	E1
R1036	C8	E1
R1037	C7	E1
R1040	D7	F1
R1046	J9	F1
R1047	H9	F2
R1048	I9	F1
R2021	H8	D2
R2022	I7	D2
R2023	F7	D2
R2024	D5	D2
R2025	C1	C2
R2026	G7	D2
R2027	H8	D2
R2028	G7	C2
R2031	D8	E2
R2032	D8	E2
R2033	D8	E2
R2034	J2	E3
R2035	C8	E2
R2040	G8	F2
R2041	F8	F2
R2042	F9	F2
R2043	M1	D2
R2048	F8	F2
R2049	H8	F2
R2061	K1	I1
R2062	K1	I1
R2063	F2	I1
R2064	F2	I1
R3021	J5	C3
R3022	K5	C4
R3023	D6	C3
R3024	D6	C3
R3025	C6	D3
R3026	D2	C1
R3027	C5	D3
R3028	D5	D3
R3029	D5	D3
R3030	E4	D4
R3031	E3	E3
R3032	F4	E4
R3033	L8	F3
R3034	F8	F3
R3035	L9	F3
R3036	J2	D4
R3040	L2	D3
R3041	L2	D3
R3046	H9	F3
R3048	L8	F3
R3049	K8	F3
R4010	H5	B4
R4011	H6	B4
R4012	G6	B4
R4013	H6	B4
R4014	H6	B4
R4020	L6	C1
R4021	K5	C4
R4022	C6	D3
R4023	C6	C4
R4031	E4	D4
R4032	E3	E4
R4033	C3	D5
R4034	J4	E4
R4035	J4	E4
R4036	J9	E5
R4037	K9	E4
R4038	L9	F4
R4040	K9	F3
R4045	J8	F4
R4048	J10	F4
R4049	J9	F3
R4055	J10	F4
U1021	F5	C2
U2021A	M2	C3
U2021B	E6	C3
U2023A	E5	D3
U2023B	E5	D3
U2030B	I4	E2
U2040A	G8	F2
U2040B	I10	F2
U2040C	C8	F2
U2040D	E8	F2
U3020	G4	C3
U3030A	K10	E3
U3030B	L8	E3
U3030C	L3	E3
U3030D	J3	E3
U3031	J1	E3
U4020A	F5	C4
U4020B	H6	C4
U4030A	F2	E4
U4030B	D4	E4
U4031	J8	E5
VR1020	D1	D1
VR2020	B2	D2
VR3031	F3	E3
W520	G3	CHASSIS
W560	C9	CHASSIS
W590	M5	CHASSIS
W590	M6	CHASSIS
W1060	L6	J1

P/O A15 ASSY also shown on 3 10 13

Scan by Zenith

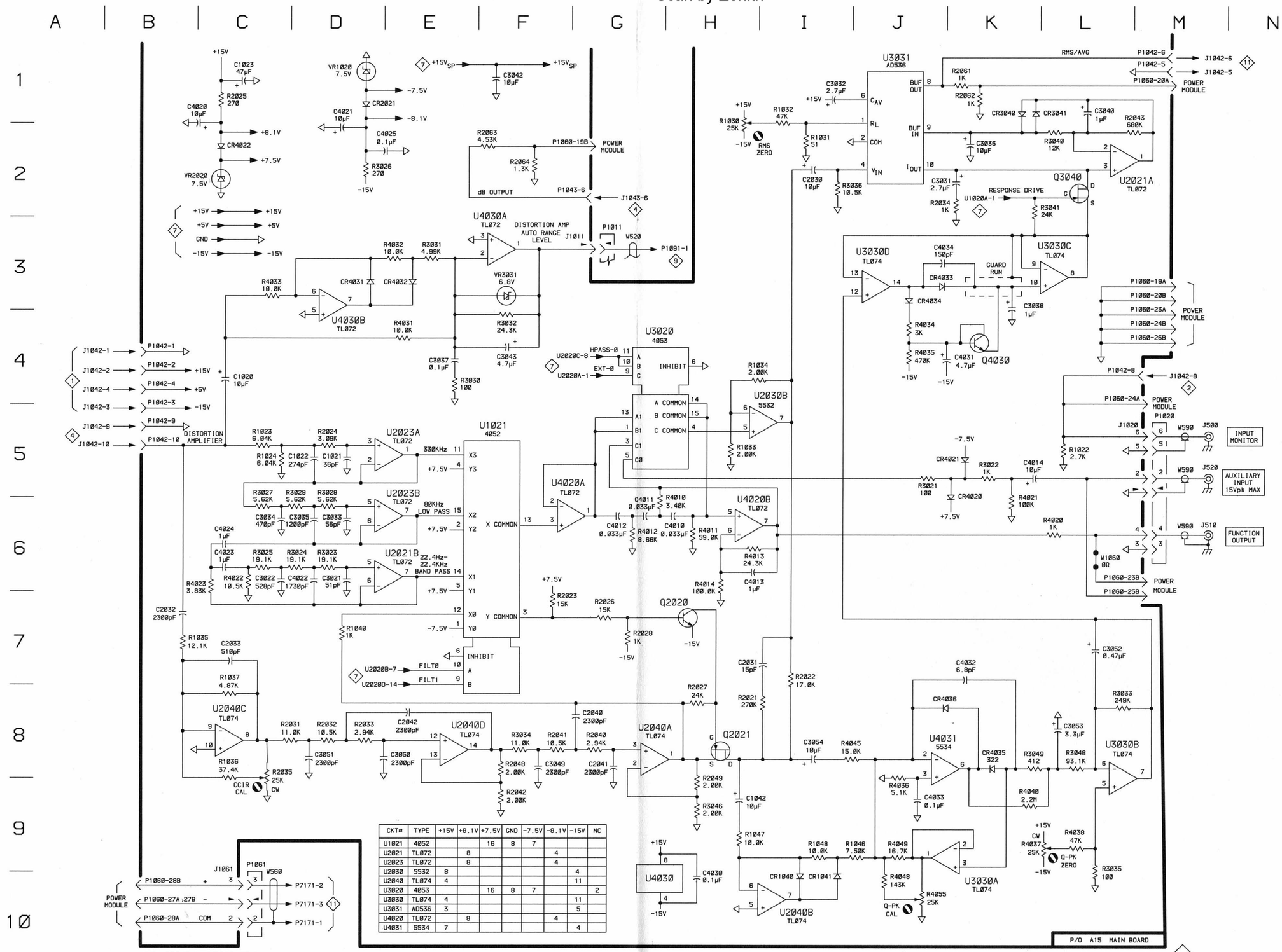

CKT#	TYPE	+15V	+8.1V	+7.5V	GND	-7.5V	-8.1V	-15V	NC
U1021	4052			16	8	7			
U2021	TL072		8				4		
U2023	TL072		8				4		
U2030	5532	8						4	
U2040	TL074	4						11	
U3020	4053			16	8	7			2
U3030	TL074	4						11	
U3031	AD536	3						5	
U4020	TL072		8				4		
U4031	5534	7						4	

AA 5001 OPT 02

4598-70
REV MAY 1984

FILTERS & AC/DC CONVERTERS 6

FILTERS & AC/DC CONVERTERS 6a

Scan by Zenith

Table 9-8
COMPONENT REFERENCE CHART

P/O A15 ASSY — POWER SUPPLY & INTERFACE 7

CIRCUIT NUMBER	SCHEMATIC LOCATION	BOARD LOCATION	CIRCUIT NUMBER	SCHEMATIC LOCATION	BOARD LOCATION
C1010	K9	B1	R2020	L8	C2
C3010	K8	B2	R3020	L4	C3
C3047	F3	H3	R3042	F3	G3
C3048	F3	H3	R3043	E4	G3
C3060	C1	I3	R3044	F4	G3
C4041	E7	H4	R3045	F4	G4
C4042	F7	H5	R3047	D6	G3
C4044	C5	F5	R3053	F3	H3
C4045	E5	F5	R3054	E2	H3
C4050	C3	H4	R3055	D3	H3
C4051	C8	H4	R3056	C5	H3
C4060	B9	I5	R3057	C2	H4
			R3058	F2	H3
CR3046	D4	G4	R4041	E6	H4
CR3060	D3	I3	R4042	E6	H4
CR4050	C7	H4	R4043	E9	H4
CR4061	D7	I4	R4044	F7	G5
			R4046	D5	F5
DS3060	D2	I3	R4047	F9	H5
DS3061	D8	J3	R4050	C2	H4
			R4051	C6	H4
F4060	B1	I4	R4052	D8	H4
F4061	B9	I4	R4053	C9	H4
F4062	B5	I4	R4054	C8	H4
J1012	I6	B1	S1011A	J5	B2
			S1011B	J4	B2
P1012	H6	B1	S1011C	J4	B2
P1042	N6	E1	S1011C	J5	B2
P1060	B1	K3	S1011D	I4	B2
P1060	B5	K3	S1011E	J6	B2
P1060	B6	K3			
P1060	B9	K3	TP3041	E5	G3
P1060	D3	K3	TP3042	F7	F3
P1060	D8	K3	TP3043	F3	G3
P1060	E2	K3	TP3044	B6	G3
P1060	E3	K3			
P1060	E7	K3	U1010	J8	B2
P1060	E9	K3	U1020A	M7	C1
P1070	N7	B1	U1020B	M8	C1
			U2020A	M6	C2
Q3050	E1	H3	U2020B	M4	C2
Q3051	C2	H3	U2020C	M5	C2
Q4050	C4	H4	U2020D	M4	C2
Q4051	C6	H4	U3010	J6	B3
Q4052	D8	H4	U4040	D5	G4
Q4053	E9	H4	U4041A	D6	H4
			U4041B	D4	H4
R1020	L7	C1			
R1021	L8	C2	VR3041	F5	G3
R2010	K5	B2	VR3051	D4	H3
R2011	K4	B2	VR4060	D7	I4
R2012	K4	B2			
R2013	K6	B2	W585	H6	CHASSIS

P/O A15 ASSY also shown on 3 6 10

Scan by Zenith

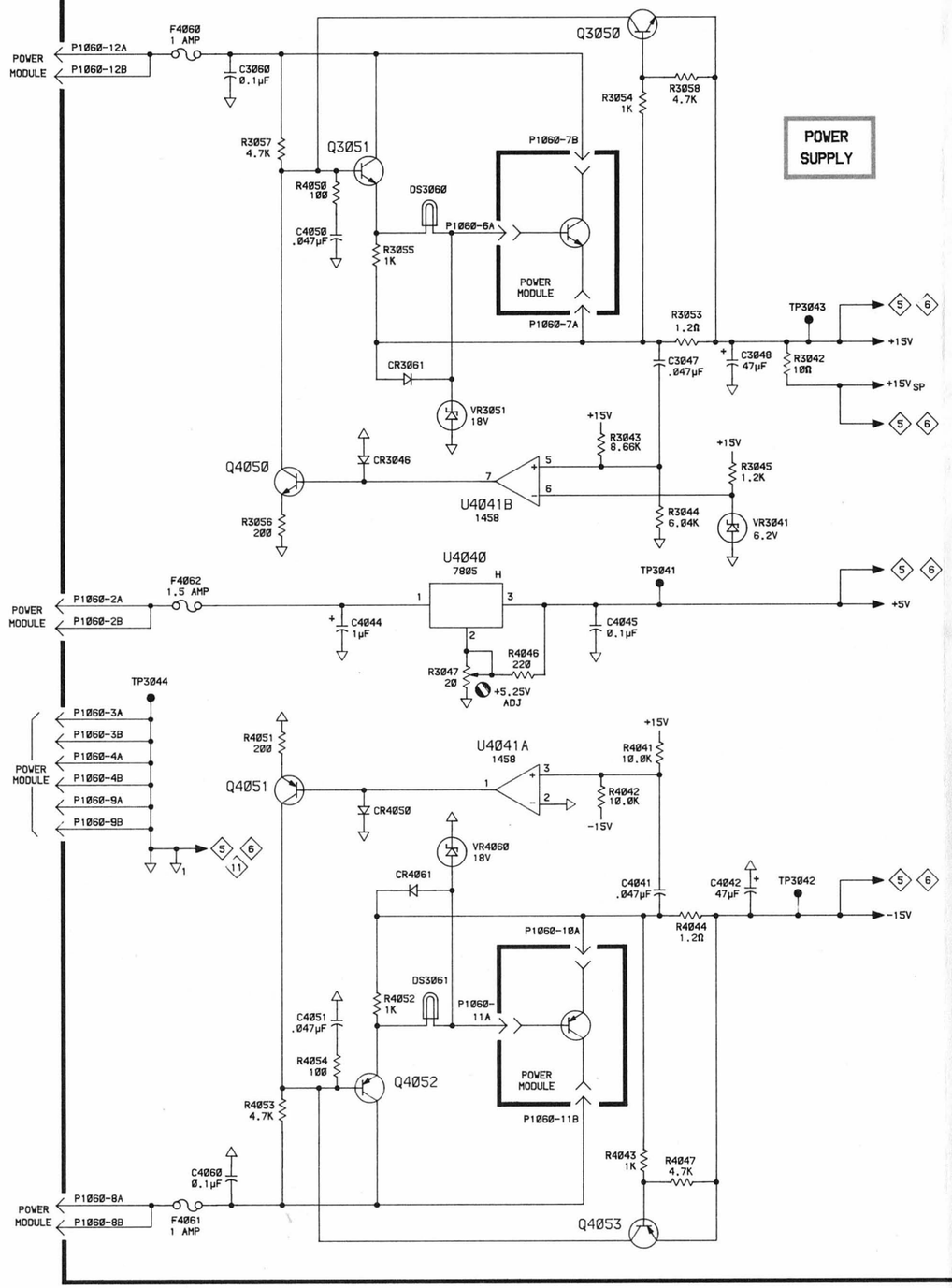

CKT#	TYPE	+15V	+7.5V	+5V	GND	-15V	NC
U1010	74LS259			16	8		
U1020	LM393	8				4	
U2020	LM324		4		11		
U3010	74LS151			16	8		6,12
U4041	1458	8				4	

NOTES:

*U3010-12 AA 5001 OPT2 IS GROUNDED.

STATIC SENSITIVE DEVICES
SEE MAINTENANCE SECTION

COMPONENT NUMBER EXAMPLE

COMPONENT NUMBER: A23 A2 R1234
ASSEMBLY NUMBER — SUBASSEMBLY NUMBER (IF USED) — SCHEMATIC CIRCUIT NUMBER

CHASSIS-MOUNTED COMPONENTS HAVE NO ASSEMBLY NUMBER PREFIX--SEE END OF REPLACEABLE ELECTRICAL PARTS LIST

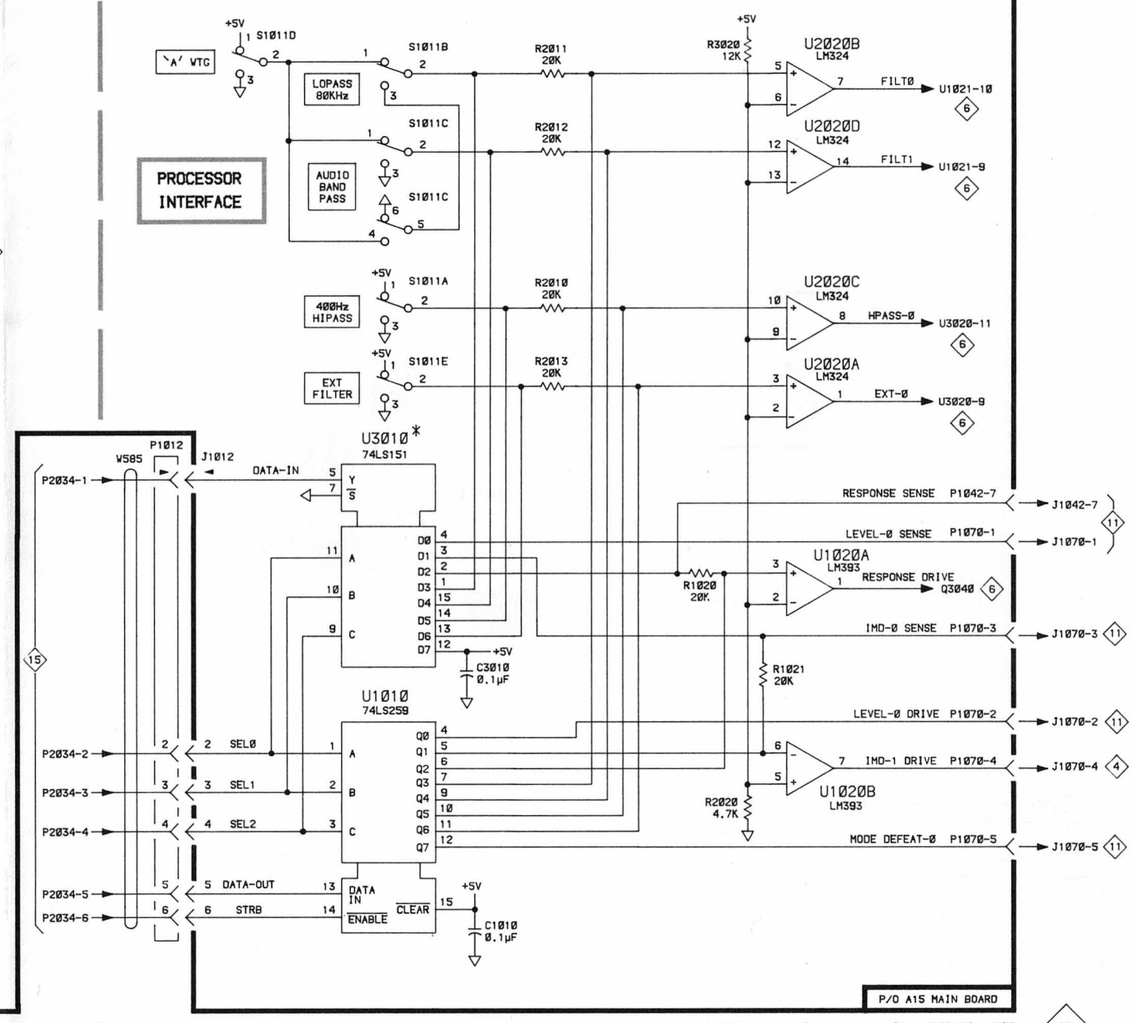

AA 5001

4598-61

POWER SUPPLY & INTERFACE 7

DJD

POWER SUPPLY & INTERFACE 7

Scan by Zenith

PARTS LOCATION GRID

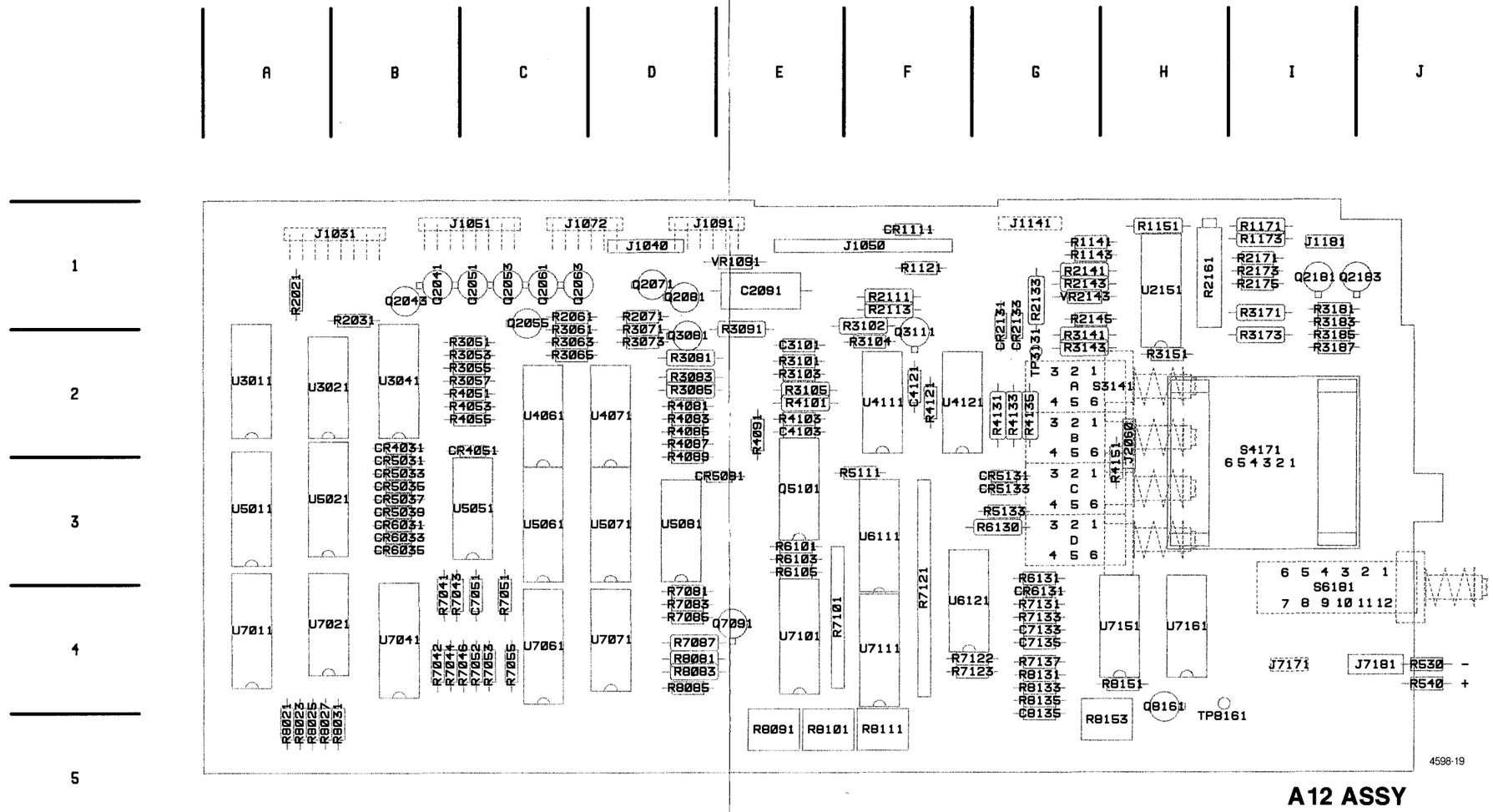

A12 ASSY

Fig. 9-4. Logic board (A12).

LOGIC BOARD (A12)
COMPONENT LOCATIONS

Static Sensitive Devices
See Maintenance Section

COMPONENT NUMBER EXAMPLE

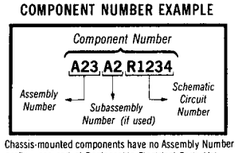

Chassis-mounted components have no Assembly Number prefix—see end of Replaceable Electrical Parts List.

Scan by Zenith

Table 9-9
COMPONENT REFERENCE CHART

P/O A12 ASSY — db CONVERTER 8

CIRCUIT NUMBER	SCHEMATIC LOCATION	BOARD LOCATION	CIRCUIT NUMBER	SCHEMATIC LOCATION	BOARD LOCATION
C3101	D4	E2	R4151	J3	H3
C4103	F3	E2	R5111	H5	E3
C4121	H3	F2	R5133	H6	G3
C7133	M8	G4	R6101	H4	E3
C7135	M8	G4	R6103	H5	E3
C8135	E10	G5	R6105	G4	E3
			R6130	G6	G3
CR2131	H1	G2	R6131	J8	G3
CR2133	I3	G2	R7101	E8	E4
CR5081	H4	D3	R7121	I7	F4
CR6131	K7	G4	R7122	I7	F4
			R7123	I7	F4
J1050	M1	E1	R7131	D11	G4
J1051	B5	C1	R7133	L8	G4
J1051	M7	C1	R7137	L8	G4
J1141	B3	G1	R8085	C4	D4
			R8091	B4	E5
P1051	B5	C1	R8101	D3	E5
P1051	N7	C1	R8111	F6	F5
P1141	B3	G1	R8131	E11	G4
			R8133	I9	G4
Q3111	H5	F2	R8135	I8	G4
Q5101	F4	E3	R8151	L7	H4
Q8161	M7	H4	R8153	I8	G5
R1121	E6	F1	TP3131	I2	G2
R1143	I6	G1	TP8161	M5	H4
R1151	C8	H1			
R1171	D8	I1	U2151	J1	H1
R1173	G2	I1	U4111A	D6	F2
R2111	I6	F1	U4111B	H2	F2
R2113	E5	F1	U4111C	C4	F2
R2133	G1	G1	U4111D	F2	F2
R2141	J6	G1	U4121A	D9	G2
R2143	H2	G1	U4121B	H1	G2
R2145	C9	G1	U4121C	I5	G2
R2161	G3	H1	U4121D	E8	G2
R2171	I2	I1	U6111	F8	F3
R2173	I1	I1	U6121A	J7	F4
R2175	K2	I1	U6121B	J8	F4
R3091	F2	E2	U6121C	G6	F4
R3102	C3	E2	U6121D	G7	F4
R3103	C4	E2	U7101	D6	E4
R3104	E2	F2	U7111	G10	F4
R3105	D4	E2	U7151A	L9	H4
R3141	H2	G2	U7151B	L9	H4
R3143	J5	G2	U7151C	D11	H4
R3151	K1	H2	U7151D	D10	H4
R3171	G3	I1	U7161A	F10	H4
R3173	J2	I2	U7161B	K9	H4
R4091	D3	E2			
R4101	D4	E2	VR2143	C9	G1
R4103	G3	E2			
R4121	H3	F2	W550	B3	CHASSIS
R4131	D5	G2	W600	B5	CHASSIS
R4133	G1	G2	W610	N7	CHASSIS
R4135	D4	G2			

P/O A12 ASSY also shown on 10 11 12

Scan by Zenith

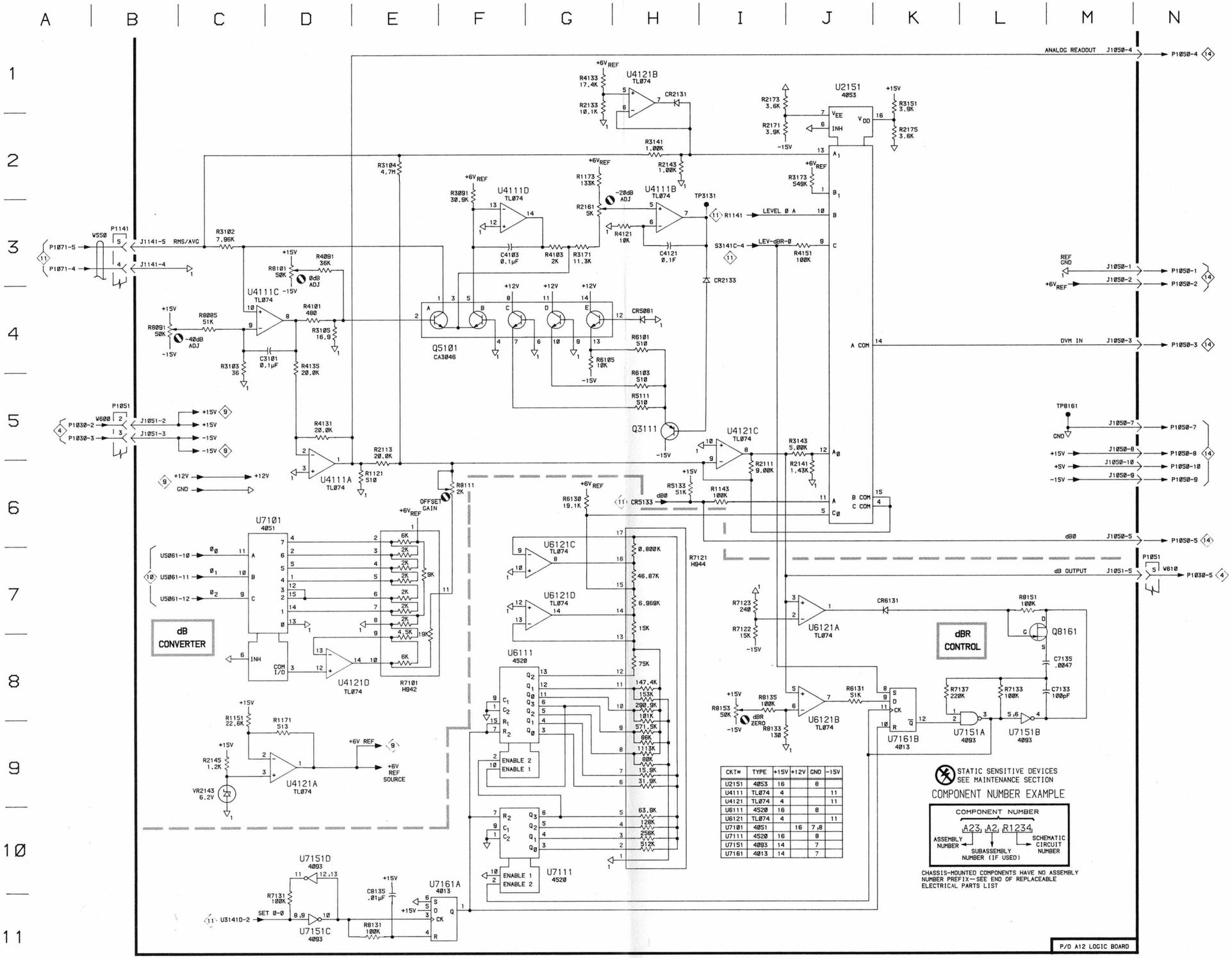

CKT#	TYPE	+15V	+12V	GND	-15V
U2151	4053	16		8	
U4111	TL074	4			11
U4121	TL074	4			11
U6111	4520	16		8	
U6121	TL074	4			11
U7101	4051		16	7,8	
U7111	4520	16		8	
U7151	4093	14		7	
U7161	4013	14		7	

Scan by Zenith

Table 9-10
COMPONENT REFERENCE CHART

P/O A12 ASSY — AUTORANGE CONTROL LOGIC ◇9◇

CIRCUIT NUMBER	SCHEMATIC LOCATION	BOARD LOCATION	CIRCUIT NUMBER	SCHEMATIC LOCATION	BOARD LOCATION
C2091	H1	E1	R7083	D5	D4
C7051	D6	C4	R7085	D5	D4
			R7087	C4	D4
J1031	B4	B1	R8021	H2	A5
J1031	M2	B1	R8023	H3	A5
J1031	M3	B1	R8025	H3	A5
J1051	B5	C1	R8027	D5	A5
J1051	M2	C1	R8031	D5	B5
J1051	M6	C1	R8081	C4	D4
J1091	B9	D1	R8083	C5	D4
J1181	M5	I1			
J2060	B7	H3	S4171	D2	I2
J2060	M5	H3			
			U3011	J2	A2
P1031	B4	B1	U3021A	K2	A2
P1031	M2	B1	U3021C	H7	A2
P1031	M3	B1	U4061B	D6	C2
P1051	B5	C1	U5071	L7	D3
P1051	M2	C1	U5081A	C4	D3
P1051	M6	C1	U5081B	C5	D3
P1091	B9	D1	U5081C	H8	D3
P1181	M5	I1	U5081D	H8	D3
			U7011	H2	A4
Q2181	L6	I1	U7021A	G4	A4
Q2183	L5	J1	U7021B	G5	A4
Q7091	D5	E4	U7021C	E8	A4
			U7021D	G4	A4
R3081	G7	D2	U7041	G7	B4
R3083	G9	D2	U7061	J6	C4
R3085	G8	D2	U7071A	I7	D4
R3181	G5	I1	U7071B	I8	D4
R3183	G6	I1	U7071C	D6	D4
R3185	K5	I2	U7071D	J7	D4
R3187	K5	I2			
R4083	H7	D2	VR1091	H1	D1
R4085	H8	D2			
R7042	H3	B4	W500	B4	CHASSIS
R7043	E7	C4	W500	N2	CHASSIS
R7044	F6	B4	W500	N3	CHASSIS
R7046	E8	C4	W520	B9	CHASSIS
R7051	D6	C4	W530	N5	CHASSIS
R7052	E6	C4	W600	B6	CHASSIS
R7053	E7	C4	W600	N2	CHASSIS
R7055	D6	C4	W600	N6	CHASSIS

P/O A12 ASSY also shown on ◇7◇ ◇10◇ ◇12◇

Scan by Zenith

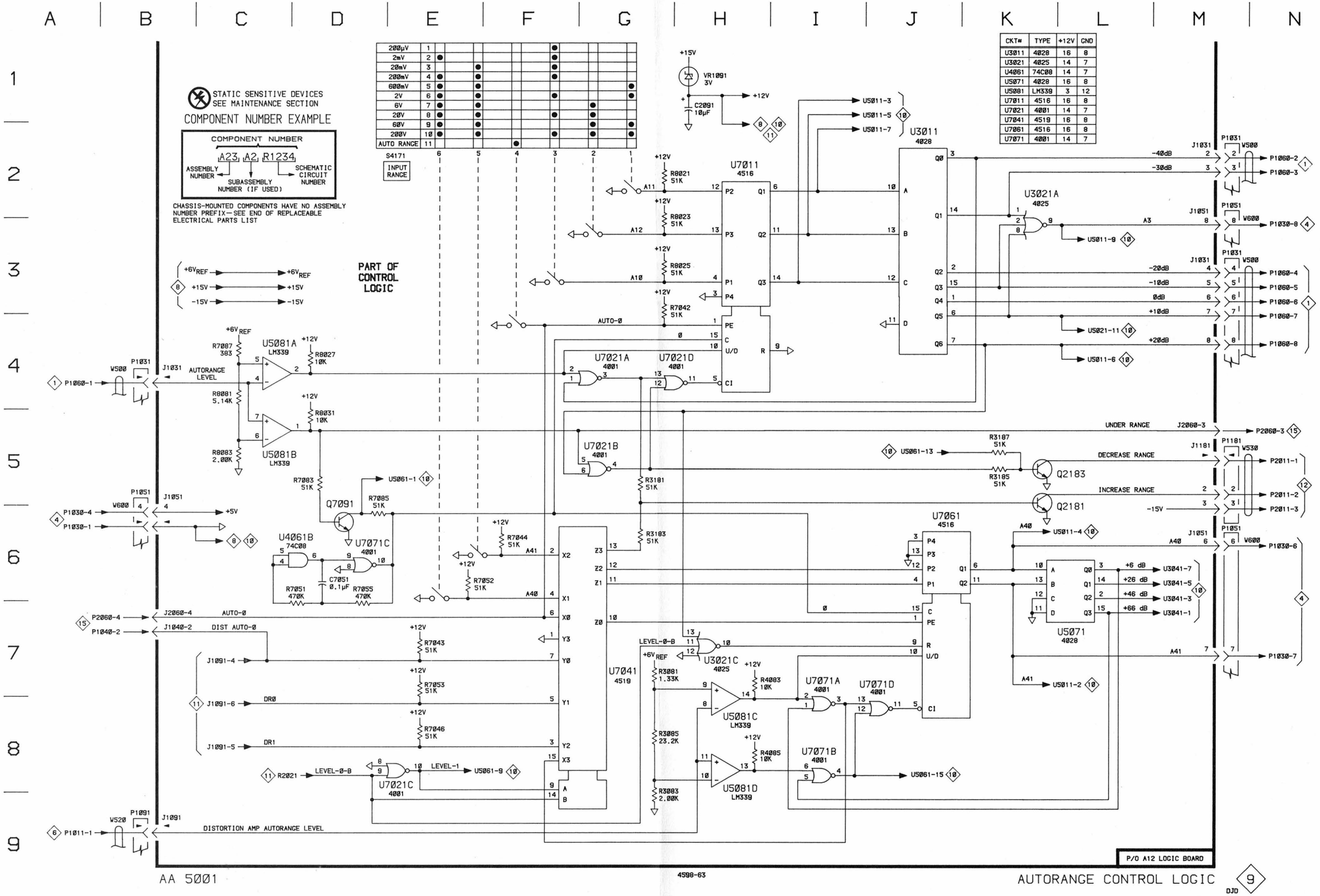

CKT#	TYPE	+12V	GND
U3011	4028	16	8
U3021	4025	14	7
U4061	74C08	14	7
U5071	4028	16	8
U5081	LM339	3	12
U7011	4516	16	8
U7021	4001	14	7
U7041	4519	16	8
U7061	4516	16	8
U7071	4001	14	7

Scan by Zenith

Table 9-11
COMPONENT REFERENCE CHART

P/O A12 ASSY — INDICATOR LIGHT & DECIMAL POINT CONTROL (10)

CIRCUIT NUMBER	SCHEMATIC LOCATION	BOARD LOCATION	CIRCUIT NUMBER	SCHEMATIC LOCATION	BOARD LOCATION
CR4031	G5	B2	R3055	I2	B2
CR4051	G5	B2	R3057	I2	B2
CR5031	F3	B3	R3061	I7	C2
CR5033	G3	B3	R3063	I7	C2
CR5035	G4	B3	R3065	I7	C2
CR5037	F3	B3	R3071	I5	D2
CR5039	G4	B3	R3073	I5	D2
CR6031	G4	B3	R3101	H7	E2
CR6033	F3	B3	R4051	G5	B2
CR6035	G4	B3	R4053	G4	B2
			R4055	G5	B2
J1040	K3	D1	R4081	H7	D2
J1040	K6	D1	R4087	G7	D2
J1050	K4	E1	R4089	D2	D3
J1072	K1	C1	R7041	F3	B4
J1072	K7	C1	R7081	D2	D4
P1072	K1	C1	U3021B	G1	A2
P1072	K7	C1	U3041	H3	B2
			U4061A	I2	C2
Q2041	J3	B1	U4061C	I2	C2
Q2043	J7	B1	U4061D	I2	C2
Q2051	J2	C1	U4071A	H7	D2
Q2053	J2	C1	U4071B	H7	D2
Q2055	J7	C1	U4071D	E2	D2
Q2061	J2	C1	U5011	C4	A3
Q2063	J4	C1	U5021	E3	A3
Q2071	J4	D1	U5051A	E3	B3
Q2081	J5	D1	U5051B	C7	B3
Q3081	J5	D2	U5051C	C7	B3
			U5051D	C7	B3
R2031	I2	B1	U5061	E6	C3
R2061	I6	C1			
R2071	I4	D1	W510	K1	CHASSIS
R3051	I3	B2	W510	K7	CHASSIS
R3053	I1	B2			

P/O A12 ASSY also shown on (7) (10) (11)

Scan by Zenith

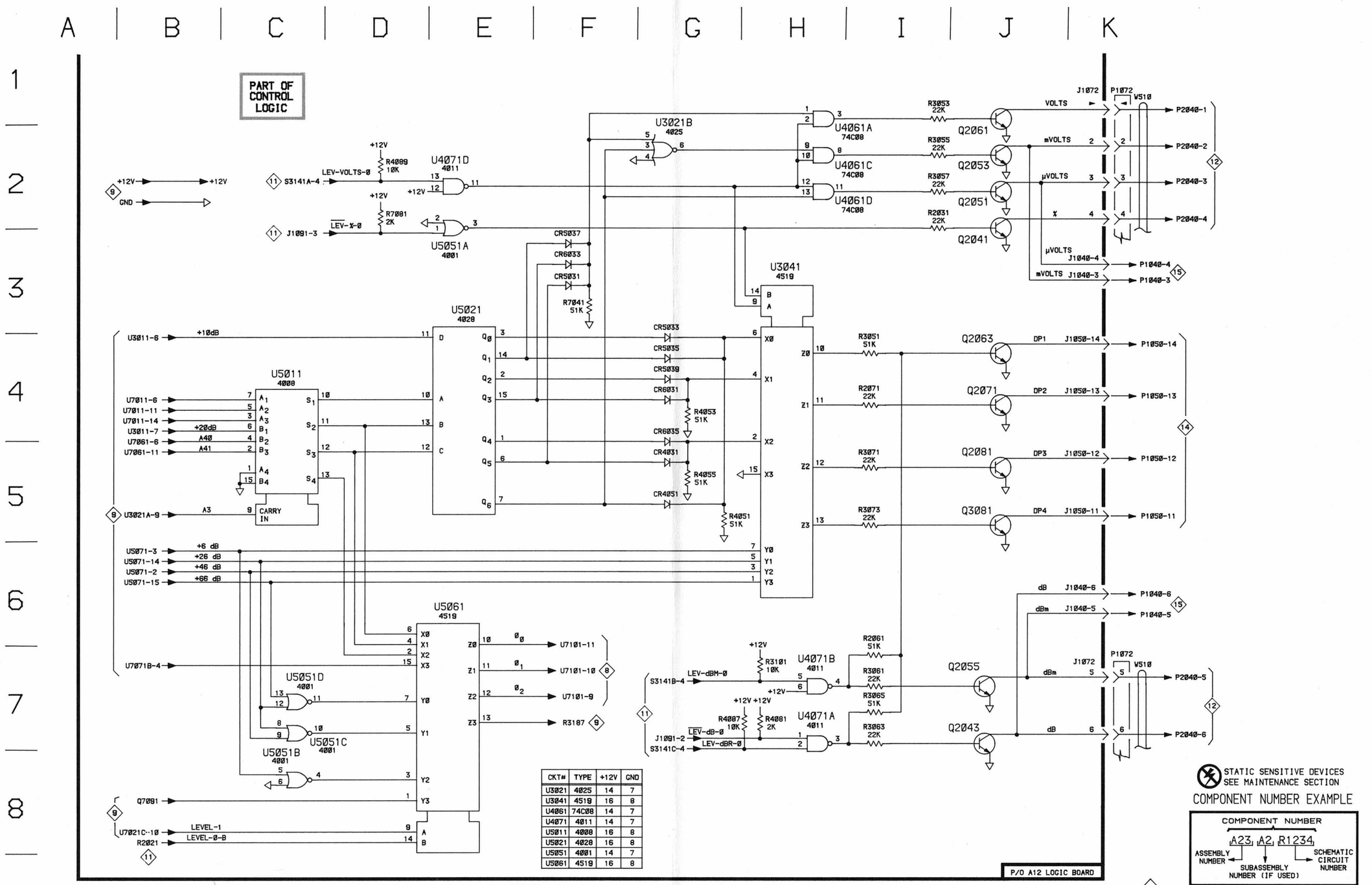

CKT#	TYPE	+12V	GND
U3021	4025	14	7
U3041	4519	16	8
U4061	74C08	14	7
U4071	4011	14	7
U5011	4008	16	8
U5021	4028	16	8
U5051	4001	14	7
U5061	4519	16	8

STATIC SENSITIVE DEVICES SEE MAINTENANCE SECTION

COMPONENT NUMBER EXAMPLE

COMPONENT NUMBER

A23 A2 R1234

ASSEMBLY NUMBER — SUBASSEMBLY NUMBER (IF USED) — SCHEMATIC CIRCUIT NUMBER

CHASSIS-MOUNTED COMPONENTS HAVE NO ASSEMBLY NUMBER PREFIX—SEE END OF REPLACEABLE ELECTRICAL PARTS LIST

AA 5001

4598-64

INDICATOR LIGHT AND DECIMAL POINT CONTROL

10

DJD

INDICATOR LIGHT & DECIMAL POINT CONTROL 10

Scan by Zenith

Table 9-12
COMPONENT REFERENCE CHART

P/O A12 ASSY — **LOGIC SWITCHES** 11

CIRCUIT NUMBER	SCHEMATIC LOCATION	BOARD LOCATION	CIRCUIT NUMBER	SCHEMATIC LOCATION	BOARD LOCATION
C530	B7	CHASSIS	P1141	F3	G1
C540	B7	CHASSIS	P7171	C8	I4
CR1111	I5	F1	R530	B7	J4
CR5131	H5	G3	R540	B7	J4
CR5133	I5	G3	R1141	G8	G1
			R2021	G8	A1
J530	B7	CHASSIS			
J540	B7	CHASSIS	S3141A	H6	G2
J550	B7	CHASSIS	S3141B	H7	G2
J1040	K2	D1	S3141C	H7	G2
J1050	K5	E1	S3141D	I8	G2
J1091	I1	D1	S6181A	D7	I3
J1141	F3	G1	S6181B	D8	I3
J2060	K6	H3	S6181C	C8	I3
J7171	C8	I4	S6181D	D7	I3
J7181	C7	I4			
			W560	B8	CHASSIS
P1091	H1	D1	W800	E7	CHASSIS

P/O A12 ASSY also shown on 7 11 12

P/O A14 ASSY — **LOGIC SWITCHES** 11

CIRCUIT NUMBER	SCHEMATIC LOCATION	BOARD LOCATION	CIRCUIT NUMBER	SCHEMATIC LOCATION	BOARD LOCATION
CR1070	C5	I1	R1075	B4	I1
			R1076	B5	I1
J1042	B1	E1	R1077	B4	I2
J1070	B3	I1			
J1070	E2	I1	S2070A	B4	I2
J1071	D1	H1	S2070B	C2	I2
J1071	E3	H1	S2070C	C3	I3
			S2070E	C1	I4
P1071	E1	H1			
P1071	E3	H1	U1070A	D3	H1
			U1070B	D2	H1
R1070	C3	H1	U1072A	C4	I1
R1071	C3	I1	U1072B	C5	I1
R1072	C2	I1			
R1073	D4	I1	W550	E1	CHASSIS
R1074	C4	I1	W550	E3	CHASSIS

P/O A14 ASSY also shown on 1 2 4 5

P/O A15 ASSY — **LOGIC SWITCHES** 11

CIRCUIT NUMBER	SCHEMATIC LOCATION	BOARD LOCATION	CIRCUIT NUMBER	SCHEMATIC LOCATION	BOARD LOCATION
J1011	H1	B1	S1010B	G1	A2
			S1010C	G2	A2
P1011	H1	B1	S1010D	G2	A2
P1070	F2	B1	S1010E	G3	A2
S1010A	F1	A2	W520	H1	CHASSIS

P/O A15 ASSY also shown on 3 6 13

Scan by Zenith

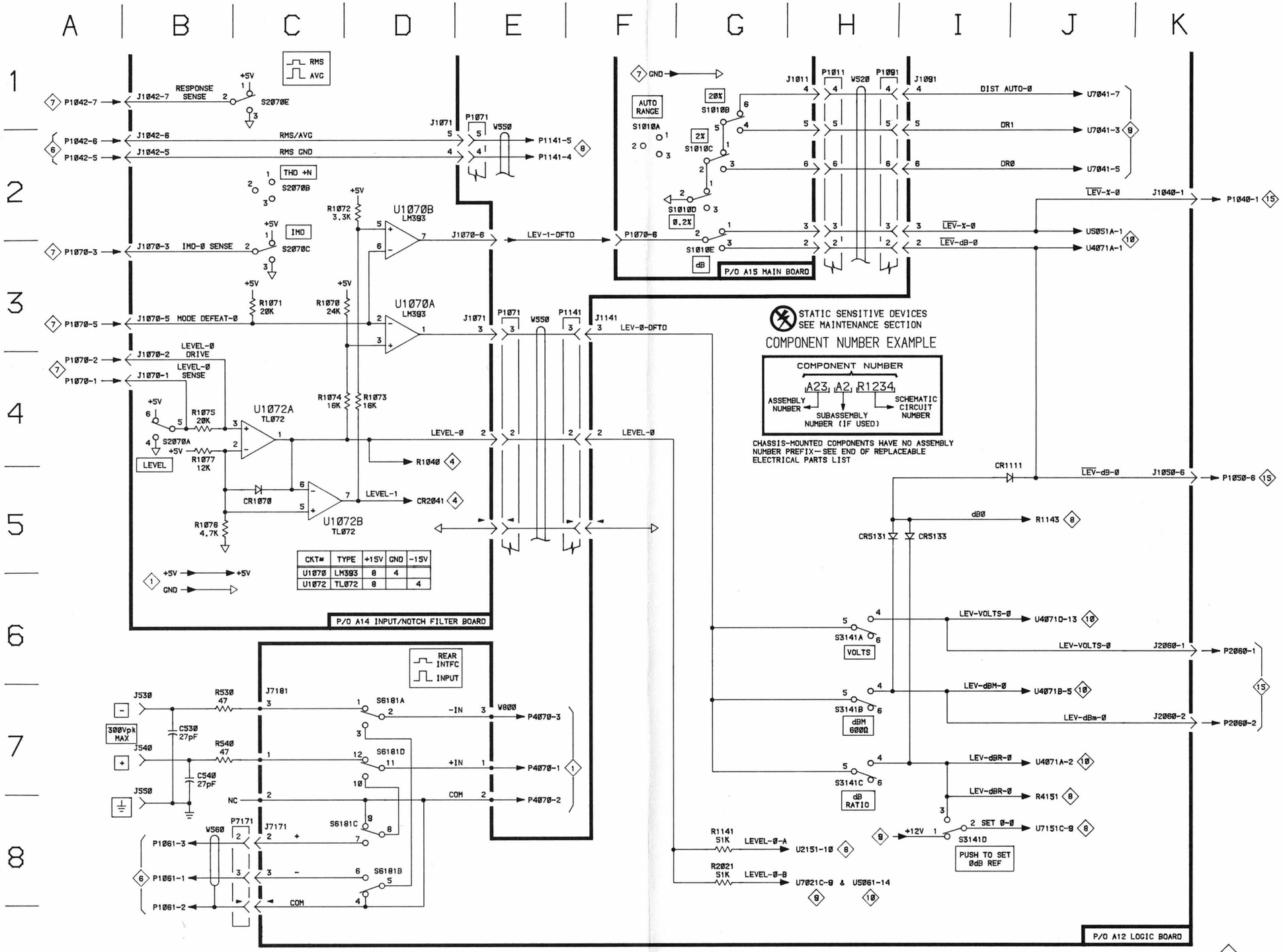

AA 5001

4598-65

LOGIC SWITCHES 11

DJD

Scan by Zenith

PARTS LOCATION GRID

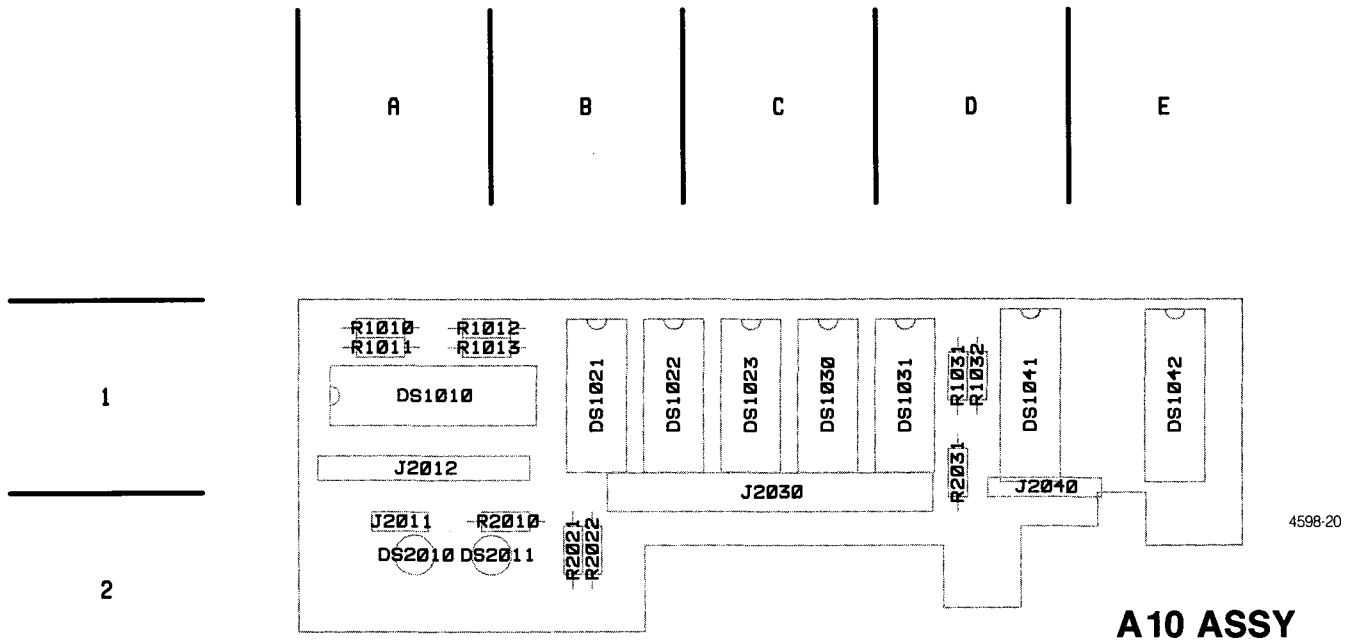

Fig. 9-5. Display board (A10).

DISPLAY BOARD (A10)
COMPONENT LOCATIONS

Static Sensitive Devices
See Maintenance Section

COMPONENT NUMBER EXAMPLE

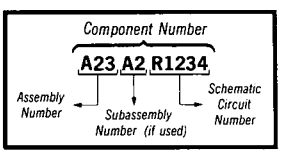

Chassis-mounted components have no Assembly Number prefix—see end of Replaceable Electrical Parts List.

Scan by Zenith

Table 9-13
COMPONENT REFERENCE CHART

P/O A10 ASSY — DISPLAY 12

CIRCUIT NUMBER	SCHEMATIC LOCATION	BOARD LOCATION	CIRCUIT NUMBER	SCHEMATIC LOCATION	BOARD LOCATION
DS1010	C2	A1	P2011	B1	A2
DS1021	D5	B1	P2011	K3	A2
DS1022	E4	B1	P2012	B2	A1
DS1023	F4	C1	P2030	B4	C2
DS1030	G4	C1	P2030	I7	C2
DS1031	H4	D1	P2030	K2	C2
DS1041A	J4	D1	P2040	K4	D2
DS1041B	J5	D1			
DS1041C	J5	D1	R1010	D5	A1
DS1041D	J5	D1	R1011	D7	A1
DS1042A	J2	E1	R1012	D6	A1
DS1042B	J2	E1	R1013	D6	A1
DS1042C	J6	E1	R1031	I4	D1
DS1042D	J6	E1	R1032	J2	D1
DS2010	J3	A2	R2010	I3	A2
DS2011	J4	A2	R2021	D6	B2
			R2022	D6	B2
J2011	B1	A2	R2031	J2	D2
J2011	J3	A2			
J2012	B2	A1	W510	K4	CHASSIS
J2030	B4	C2	W530	B1	CHASSIS
J2030	I7	C2	W530	K3	CHASSIS
J2030	J2	C2	W570	B2	CHASSIS
J2040	J4	D2	W580	B4	CHASSIS
			W580	F7	CHASSIS
			W580	K2	CHASSIS

Scan by Zenith

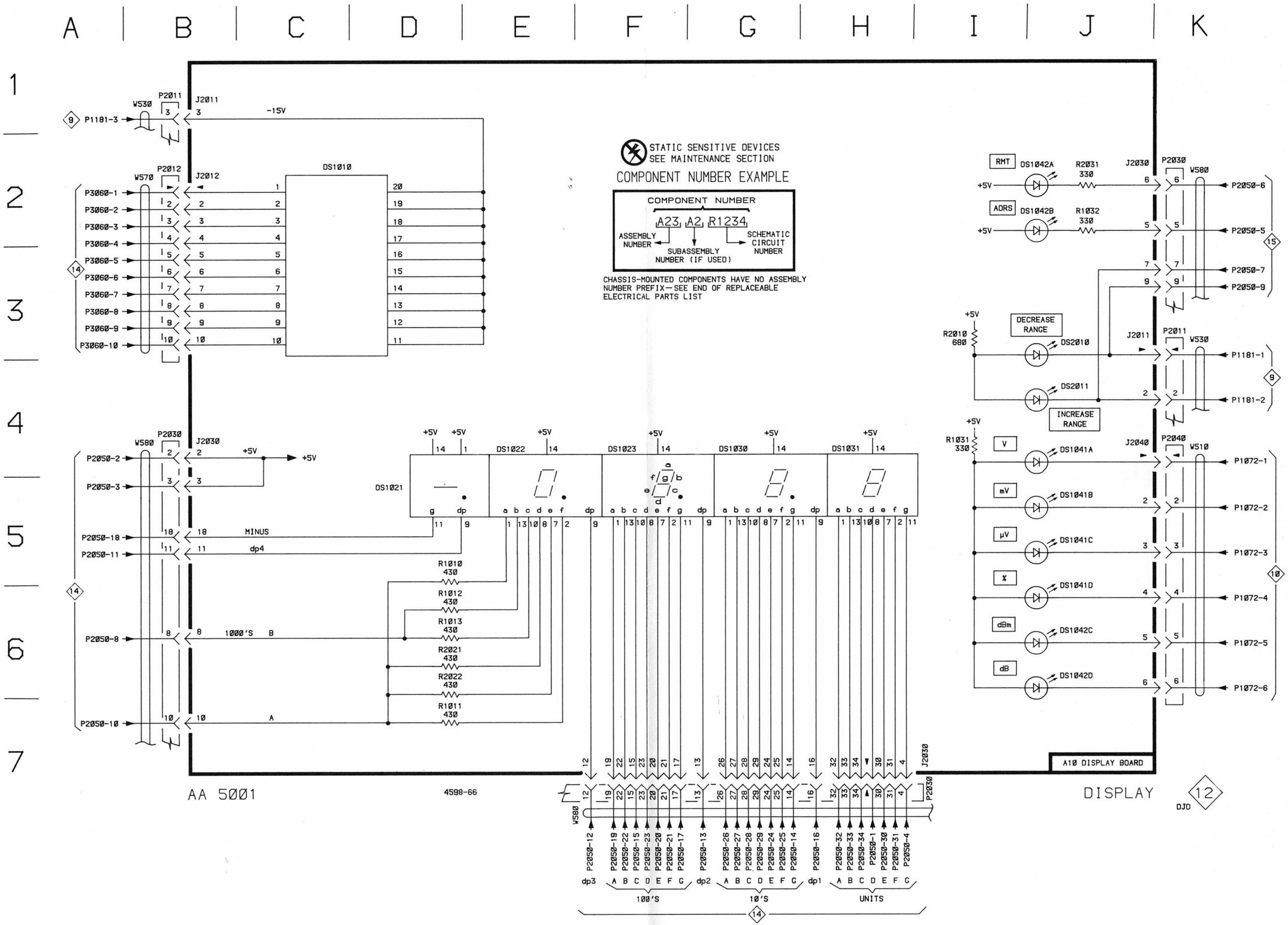

Scan by Zenith

PARTS LOCATION GRID

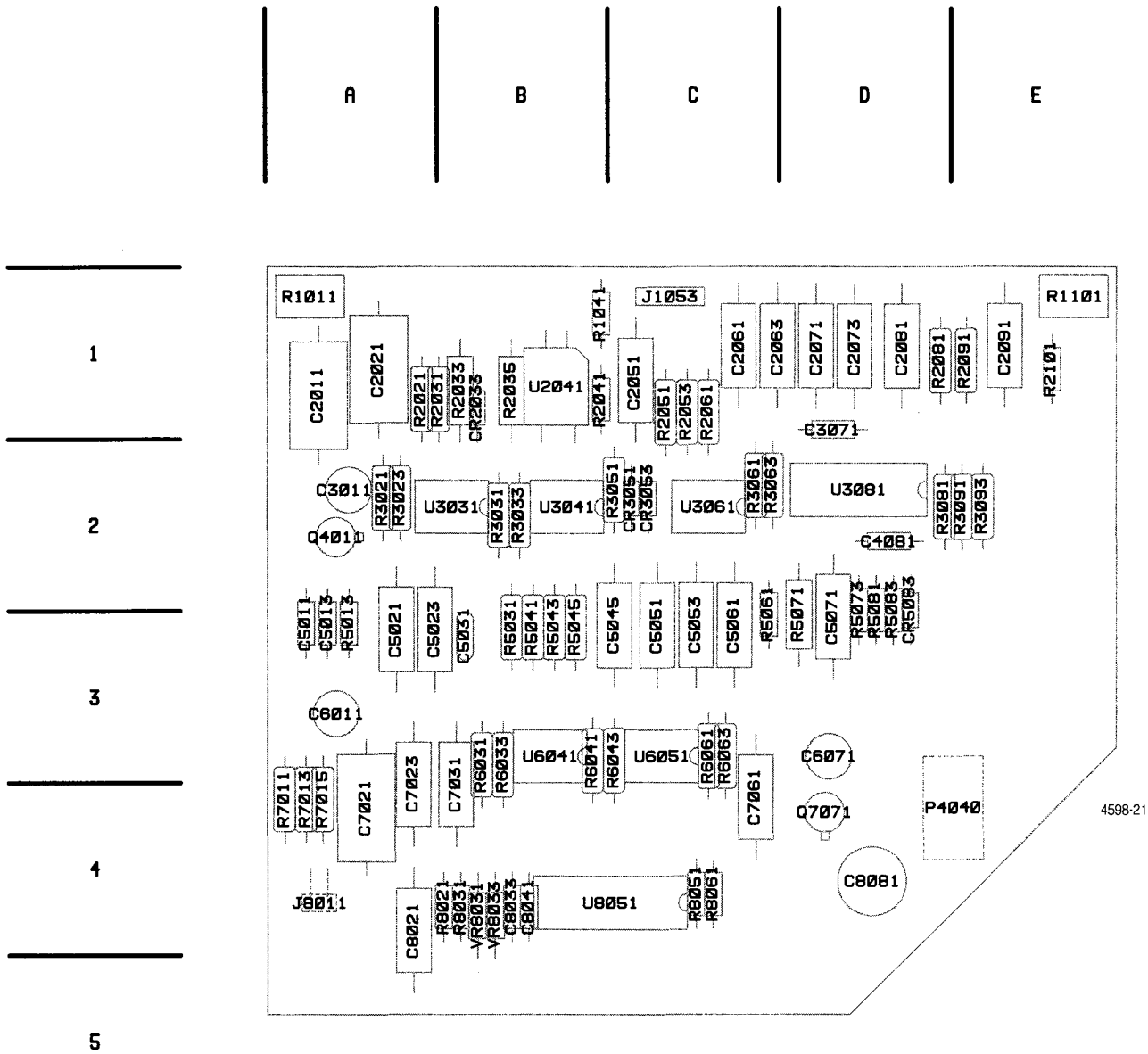

Fig. 9-6. IMD board (A13).

A13 ASSY

IMD BOARD (A13) COMPONENT LOCATIONS

Static Sensitive Devices
See Maintenance Section

COMPONENT NUMBER EXAMPLE

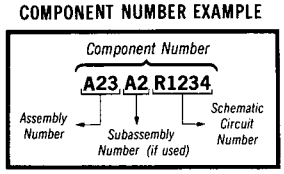

Chassis-mounted components have no Assembly Number prefix—see end of Replaceable Electrical Parts List.

Scan by Zenith

Table 9-14
COMPONENT REFERENCE CHART

P/O A13 ASSY — IMD 13

CIRCUIT NUMBER	SCHEMATIC LOCATION	BOARD LOCATION	CIRCUIT NUMBER	SCHEMATIC LOCATION	BOARD LOCATION
C2011	J5	A1	R2061	C2	C2
C2021	J4	A1	R2081	D1	D1
C2051	E2	C1	R2091	C2	E1
C2061	D1	C1	R2101	C2	E1
C2063	E2	D1	R3021	I5	A2
C2071	D2	D1	R3023	J5	A2
C2073	C1	D1	R3031	I5	B2
C2081	C3	D1	R3033	H5	B2
C2091	C1	E1	R3051	I2	C2
C3011	I1	A2	R3061	F3	C2
C3071	D3	D1	R3063	F3	C2
C4081	E2	D2	R3081	C2	D2
C5011	C7	A3	R3091	C3	E2
C5013	C8	A3	R3093	C3	E2
C5021	H5	A3	R5013	F5	A3
C5023	I5	B3	R5031	H3	B3
C5031	I5	B3	R5041	H3	B3
C5045	H7	C3	R5043	I3.B3	
C5051	G6	C3	R5045	H4	B3
C5053	F2	C3	R5061	F2	C3
C5061	F3	C3	R5071	E3	D3
C5071	D3	D3	R5073	D6	D3
C6011	J7	A3	R5081	E3	D3
C6071	D6	D3	R5083	E6	D3
C7021	I7	A4	R6031	I7	B4
C7023	I8	A4	R6033	I7	B4
C7031	H7	B4	R6041	H7	B4
C7061	G7	C4	R6043	H6	C4
C8021	K8	A5	R6061	G6	C4
C8033	E7	B4	R6063	G6	C4
C8041	E8	B4	R7011	J8	A4
C8081	C8	D4	R7013	J7	A4
			R7015	K8	A4
CR2033	I1	B2	R8021	D8	B4
CR3051	H3	C2	R8031	D7	B4
CR3053	H4	C2	R8051	E7	C4
CR5083	D6	D3	R8061	D5	C4
J1053	E6	C1	U2041	H2	B1
J8011	K7	A4	U3031A	J2	A2
			U3031B	G5	A2
P1053	E6	C1	U3041A	H4	B2
P4040	B1	E4	U3041B	I4	B2
P8011	L7	A4	U3061A	G3	C2
			U3061B	F3	C2
Q4011	H1	A2	U3081A	E1	D2
Q7071	E6	D4	U3081B	D3	D2
			U6041A	H7	B3
R1011	K2	A1	U6041B	I8	B3
R1041	I2	B1	U6051A	G7	C3
R1101	D3	E1	U6051B	F6	C3
R2021	J2	A1	U8051	F7	B4
R2031	J1	B1			
R2033	J2	B1	VR8031	D8	B4
R2035	H2	B1	VR8033	D7	B4
R2041	I3	B1			
R2051	E3	C2	W540	L7	CHASSIS
R2053	E2	C2			

Scan by Zenith

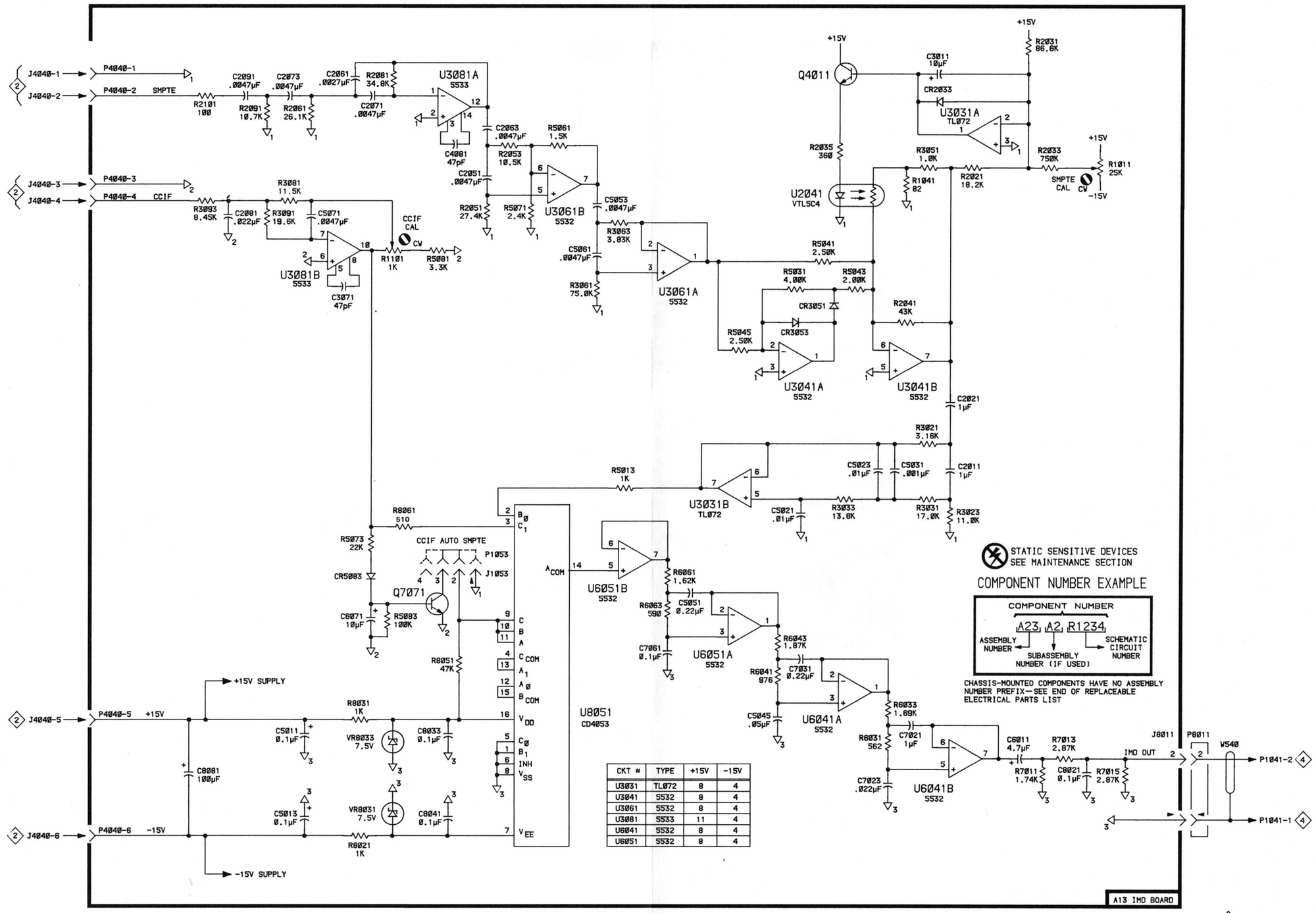

CKT #	TYPE	+15V	-15V
U3031	TL072	8	4
U3041	5532	8	4
U3061	5532	8	4
U3081	5533	11	4
U6041	5532	8	4
U6051	5532	8	4

Scan by Zenith

PARTS LOCATION GRID

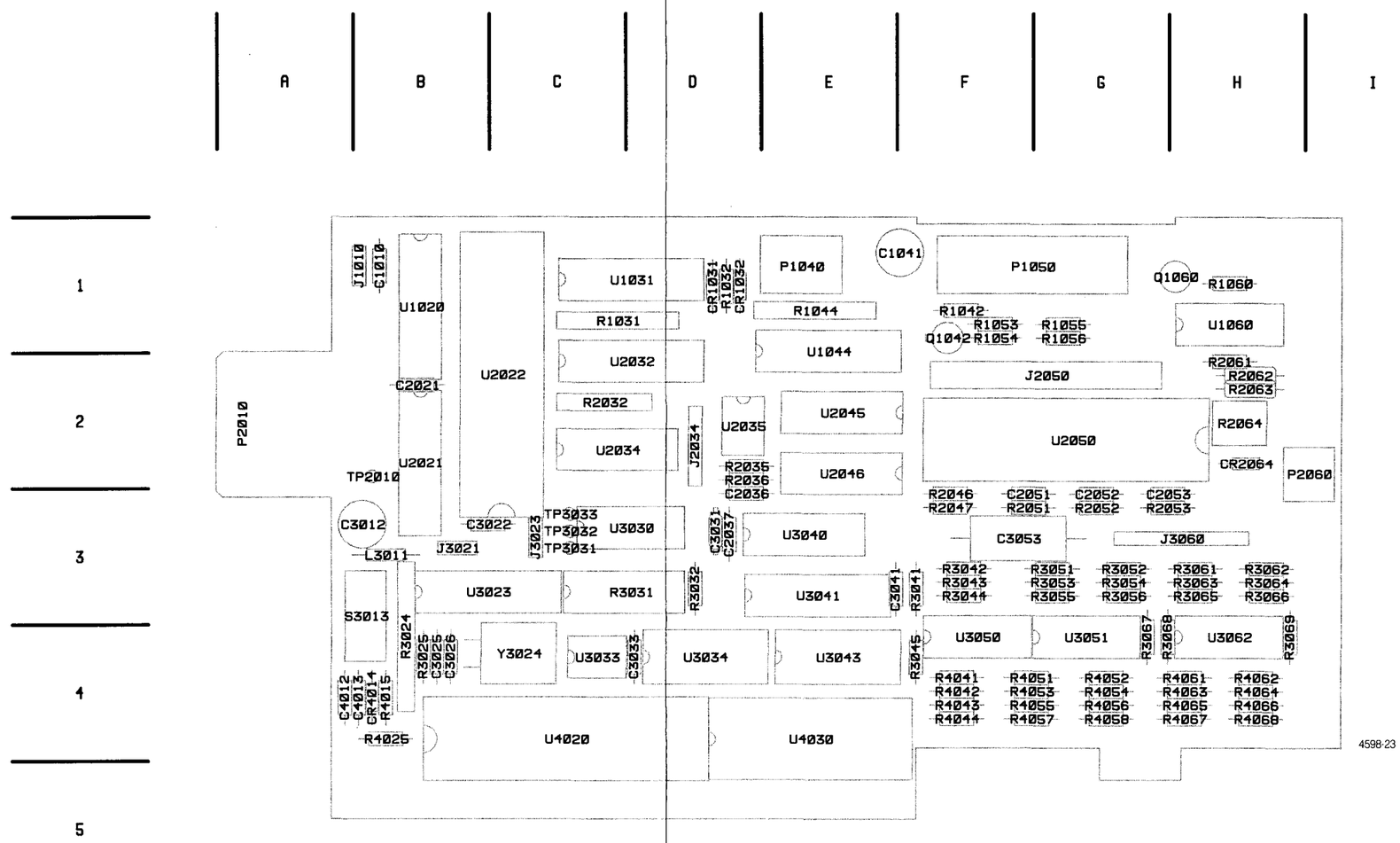

Fig. 9-7. GPIB board (A16).

A16 ASSY

Static Sensitive Devices
See Maintenance Section

COMPONENT NUMBER EXAMPLE

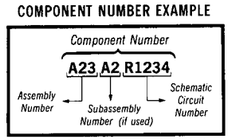

Chassis-mounted components have no Assembly Number prefix—see end of Replaceable Electrical Parts List.

Scan by Zenith

Table 9-15
COMPONENT REFERENCE CHART

P/O A16 ASSY — DVM READOUT CONTROL (14)

CIRCUIT NUMBER	SCHEMATIC LOCATION	BOARD LOCATION	CIRCUIT NUMBER	SCHEMATIC LOCATION	BOARD LOCATION
C2051	F4	F3	R3065	D8	H3
C2052	F5	G3	R3066	D9	H3
C2053	F2	G3	R3067	C7	G4
C3053	F3	F3	R3068	C8	H4
			R3069	C9	H4
J2050	L2	G2	R4041	D4	F4
J3060	I8	G3	R4042	C4	F4
			R4043	C4	F4
P1050	B1	F1	R4044	C5	F4
P2050	M1	G2	R4051	D5	F4
P3060	I8	G3	R4052	D7	G4
			R4053	C5	F4
Q1042	H2	F1	R4054	C6	G4
Q1060	K6	H1	R4055	C5	F4
			R4056	C6	G4
R1042	H1	F1	R4057	C6	F4
R1053	K7	F1	R4058	C7	G4
R1054	K7	F1	R4061	D7	G4
R1055	K6	G1	R4062	D9	H4
R1056	K7	G1	R4063	C8	G4
R1060	K6	H1	R4064	C9	H4
R2046	F4	F3	R4065	C7	G4
R2047	F4	F3	R4066	C9	H4
R2051	G4	F3	R4067	C8	G4
R2052	E4	G3	R4068	C9	H4
R2053	F2	G3			
R2061	H6	H2	U1060A	I6	H1
R2062	F2	H2	U1060B	I5	H1
R2063	F3	H2	U1060C	J5	H1
R2064	F2	H2	U1060D	J6	H1
R3041	C4	F3	U2050	H1	G2
R3042	D4	F3	U3050A	D4	F4
R3043	D4	F3	U3050B	D4	F4
R3044	D4	F3	U3051A	D6	G4
R3045	C4	F4	U3051B	D7	G4
R3051	D5	F3	U3051C	D6	G4
R3052	D7	G3	U3051D	D5	G4
R3053	D5	F3	U3062A	D8	H4
R3054	D6	G3	U3062B	D10	H4
R3055	D5	F3	U3062C	D9	H4
R3056	D6	G3	U3062D	D8	H4
R3061	D8	H3			
R3062	D9	H3	W570	J8	CHASSIS
R3063	D7	H3	W580	M1	CHASSIS
R3064	D9	H3			

P/O A16 ASSY also shown on (15)

Scan by Zenith

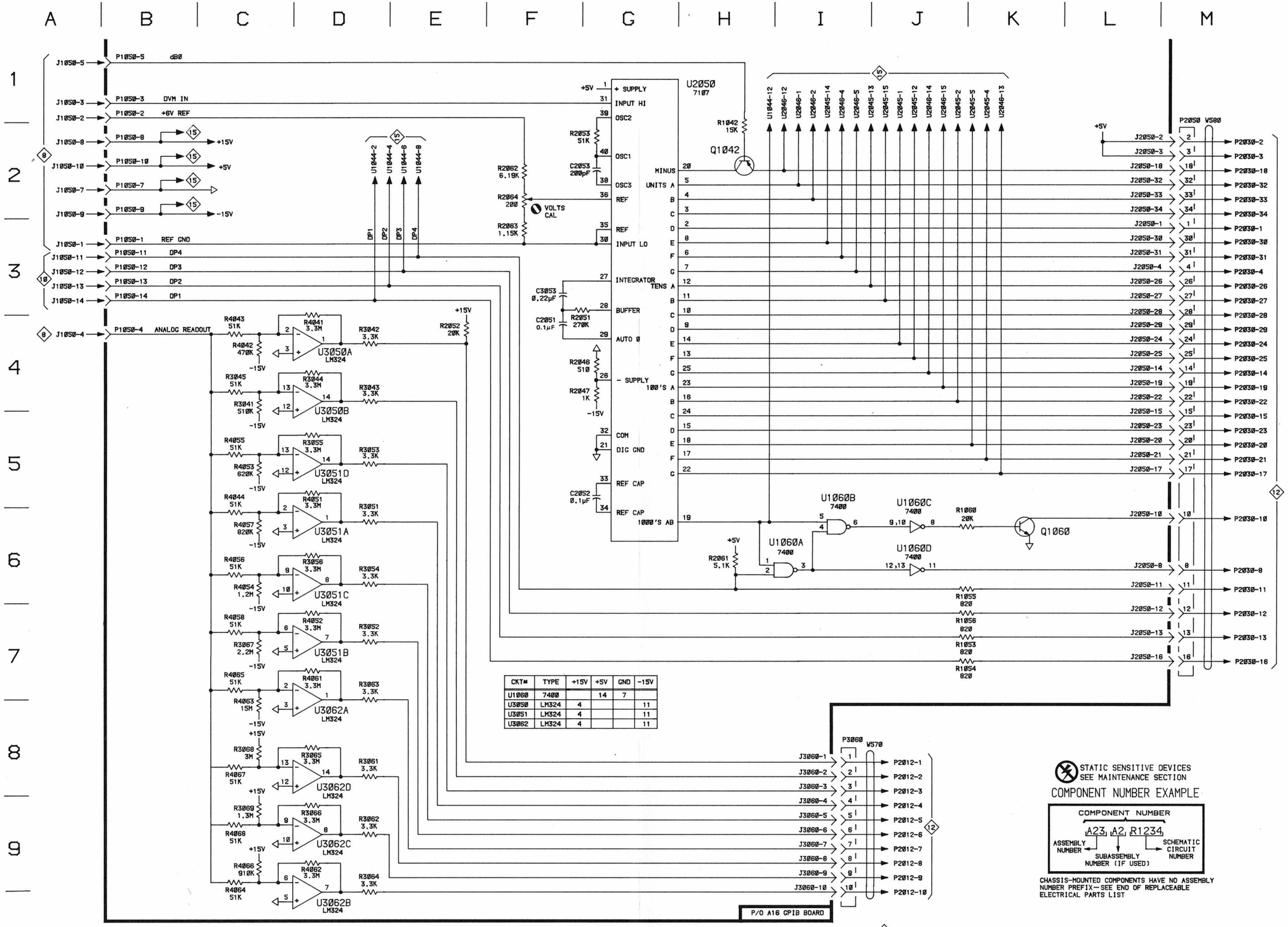

CKT#	TYPE	+15V	+5V	GND	-15V
U1060	7400		14	7	
U3050	LM324	4			11
U3051	LM324	4			11
U3062	LM324	4			11

Scan by Zenith

Table 9-16
COMPONENT REFERENCE CHART

P/O A16 ASSY — GPIB 15

CIRCUIT NUMBER	SCHEMATIC LOCATION	BOARD LOCATION
C1010	I8	B1
C1041	B3	E1
C2021	H9	B2
C2036	B3	D3
C2037	H10	D3
C3012	A4	A3
C3022	H10	B3
C3025	C3	B4
C3026	C4	B4
C3031	A5	D3
C3033	I10	D4
C3041	I10	F3
C4012	C1	A4
C4013	B6	B4
CR1031	N8	D1
CR1032	N8	D1
CR2064	O7	H2
CR4014	A6	B4
J1010	O8	B1
J2034	C10	D2
J2050	K10	G2
J2050	O8	G2
J3021	I4	B3
J3023	K5	C3
L3011	B4	B3
P1010	N7	B1
P1040	O6	E1
P1040	O9	E1
P1040	O10	E1
P1050	O10	F1
P2010	O2	A2
P2010	O4	A2
P2010	O8	A2
P2034	C10	D2
P2050	L10	G2
P2050	O8	G2
P2060	O7	I2
P2060	O9	I2
R1031A	N6	C1
R1031B	N7	C1
R1032	N8	D1
R1044	E6	E1
R2032	E8	C2
R2032A	O6	C2
R2035	C8	D2
R2036	C8	D2
R3024	G2	B4
R3025	C5	B4
R3031	F1	C3
R3032	A5	D3
R4015	B6	B4
R4025	E5	B4
S3013	H3	A3
TP2010	B5	B2
TP3031	H5	C3
TP3032	J7	C3
TP3033	J7	C3
U1020	N6	B1
U1031	L7	C1
U1044	F6	E2
U2021	N2	B2
U2022	M1	C2
U2032	F8	D2
U2034	H7	C2
U2035A	D7	D2
U2035B	D8	D2
U2045	B7	E2
U2046	B9	E2
U3023	F3	B3
U3030A	C5	C3
U3030B	F5	C3
U3030C	G5	C3
U3030D	F5	C3
U3030E	G8	C3
U3030F	G9	C3
U3033	B5	C4
U3034	K2	D4
U3040	K9	E3
U3041	J10	E3
U3043	K4	E4
U4020	D1	C4
U4030	J2	E4
W580	L11	CHASSIS
W580	P8	CHASSIS
W585	C11	CHASSIS
Y3024	C4	C4

P/O A16 ASSY also shown on 8

Scan by Zenith

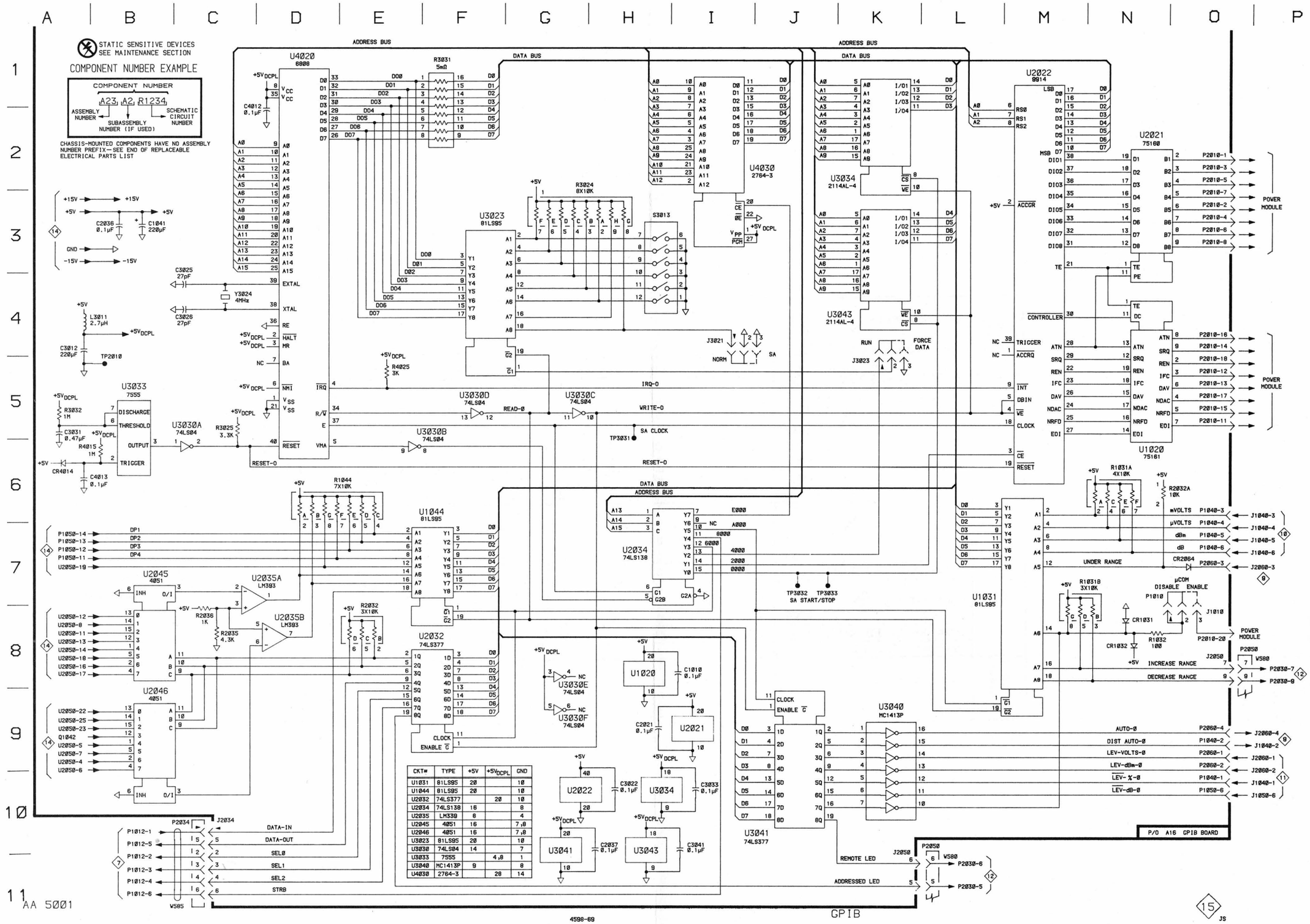

CKT#	TYPE	+5V	+5VDCPL	GND
U1031	81LS95	20		10
U1044	81LS95	20		10
U2032	74LS377		20	10
U2034	74LS138	16		8
U2035	LM339	8		4
U2045	4051	16		7,8
U2046	4051	16		7,8
U3023	81LS95	20		10
U3030	74LS04	14		7
U3033	7555		4,8	1
U3040	MC1413P	9		8
U4030	2764-3		28	14

Scan by Zenith

Table 9-17
LOGIC AND CONTROL STATES TROUBLESHOOTING CHART LEVEL VOLTS FUNCTION

			SELECTED INPUT RANGE									
			200 V	60 V	20 V	6 V	2 V	600 mV	200 mV	20 mV	2 mV	200 μV
INPUT AMP GAIN CONTROL	U7011 OUTPUTS (9)	Q1	0	1	0	1	0	1	0	0	0	0
		Q2	0	0	1	1	0	0	1	1	1	1
		Q3	0	0	0	0	1	1	1	1	1	1
	INPUT AMPLIFIER GAIN (corresponding to U3011 outputs) (9)		−40 dB	−30 dB	−20 dB	−10 dB	0 dB	+10 dB	+20 dB	+20 dB	+20 dB	+20 dB
DISTORTION AMP GAIN CONTROL	U3021A OUTPUT (9)	A3	1	0	1	0	1	0	1	1	1	1
	U2040 ATTENUATION (4)		0	−10 dB	0	−10 dB	0	−10 dB	0	0	0	0
	U7041 OUTPUTS (9)	Z1	0	0	0	0	0	0	0	1	0	1
		Z2	0	0	0	0	0	0	0	0	1	1
	U7061 OUTPUTS (9)	Q1	0	0	0	0	0	0	0	1	0	1
		Q2	0	0	0	0	0	0	0	0	1	1
	DISTORTION AMP GAIN (corresponding to U5071 outputs) (9)		+6 dB	+6 dB	+6 dB	+6 dB	+6 dB	+6 dB	+6 dB	+26 dB	+46 dB	+66 dB
INDICATOR CONTROL	U5011 OUTPUTS (10)	S0	1	1	1	1	1	1	0	0	0	0
		S1	0	0	1	1	0	0	0	1	0	1
		S2	0	0	0	0	1	1	0	0	1	1
		S3	0	0	0	0	0	0	1	1	1	1
	U5021 SELECTED OUTPUT (Hi)		1	1	3	3	5	0	0	2	4	6
	U3041 INPUTS (10)	X0	1	1	0	0	0	0	0	0	0	1
		X1	0	0	1	1	0	0	0	1	0	0
		X2	0	0	0	0	1	0	0	0	1	0
	U3041 SELECTED OUTPUT (Hi)		Z0	Z0	Z1	Z1	Z2	NONE	Z0	Z1	Z2	Z1
	DISPLAY UNIT LEDS		V	V	V	V	V	mV	mV	mV	mV	μV
dB OFFSET CONTROL	U5061 OUTPUTS (10)	Z0	0	0	1	1	0	0	0	1	0	1
		Z1	0	0	0	0	1	1	0	0	1	1
		Z2	0	0	0	0	0	0	1	1	1	1
	dB OFFSET VOLTS (8)		−4 V	−4 V	−2 V	−2 V	0	0	+2 V	+4 V	+6 V	+8 V

Scan by Zenith

Table 9-18
LOGIC AND CONTROL STATES TROUBLESHOOTING CHART THD + N FUNCTION

			SELECTED DISTORTION RANGE			
			200% (AUTO ONLY)	20%	2%	0.2%
DIST. AMP GAIN CONTROL	U7061 OUTPUTS 9	Q1	0	1	0	1
		Q2	0	0	1	1
	U7041 OUTPUTS 9	Z1	0	1	0	1
		Z2	0	0	1	1
	DISTORTION AMP GAIN (corresponding to U5071 outputs) 9		+6 dB	+26 dB	+46 dB	+66 dB
dB OFFSET CONTROL	U5061 INPUTS 10	Y0	0	1	0	1
		Y1	0	1	1	0
		Y2	1	0	0	0
	U5061 OUTPUTS 10	Z0	0	1	0	1
		Z1	0	0	1	1
		Z2	1	1	1	1
	dB OFFSET VOLTS 8		+2 V	+4 V	+6 V	+8 V
	U3041 SELECTED OUTPUT (Hi)		Z0	Z1	Z2	Z3

Scan by Zenith

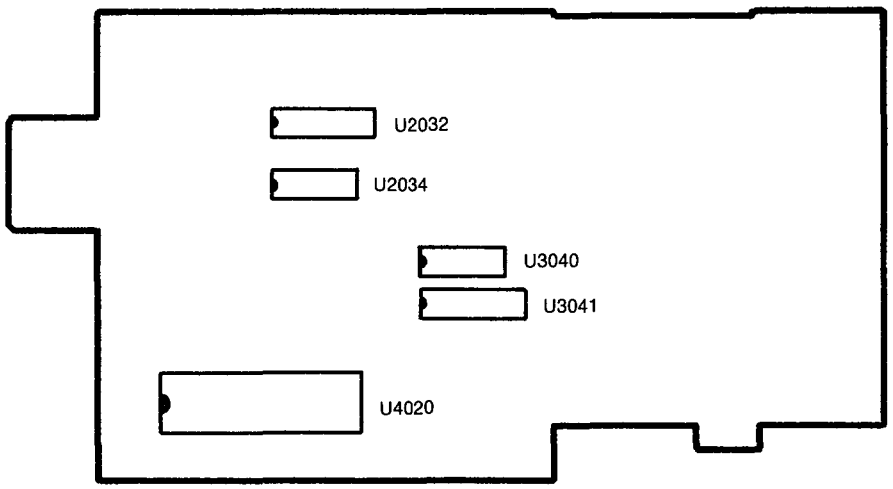

GPIB board (A16)

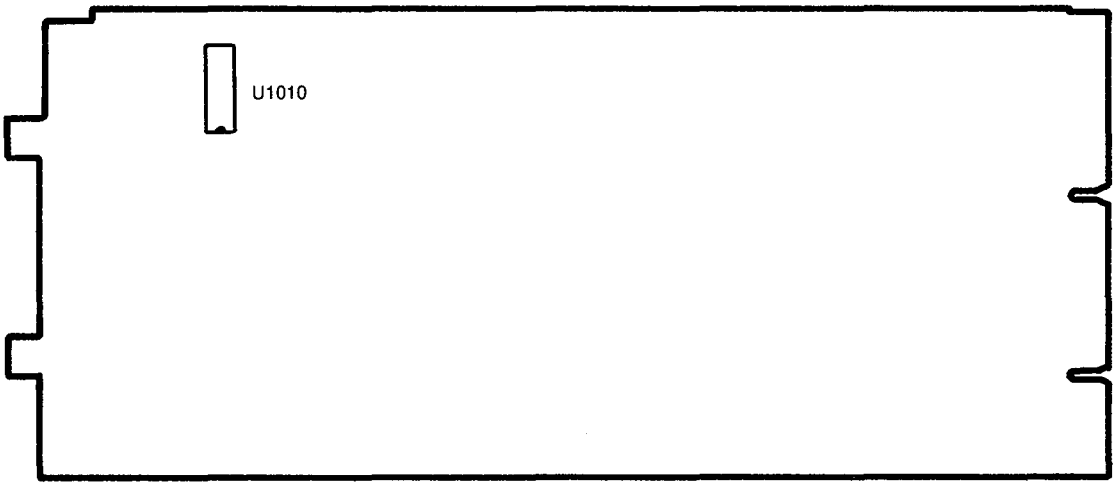

Main board (A15)

Scan by Zenith

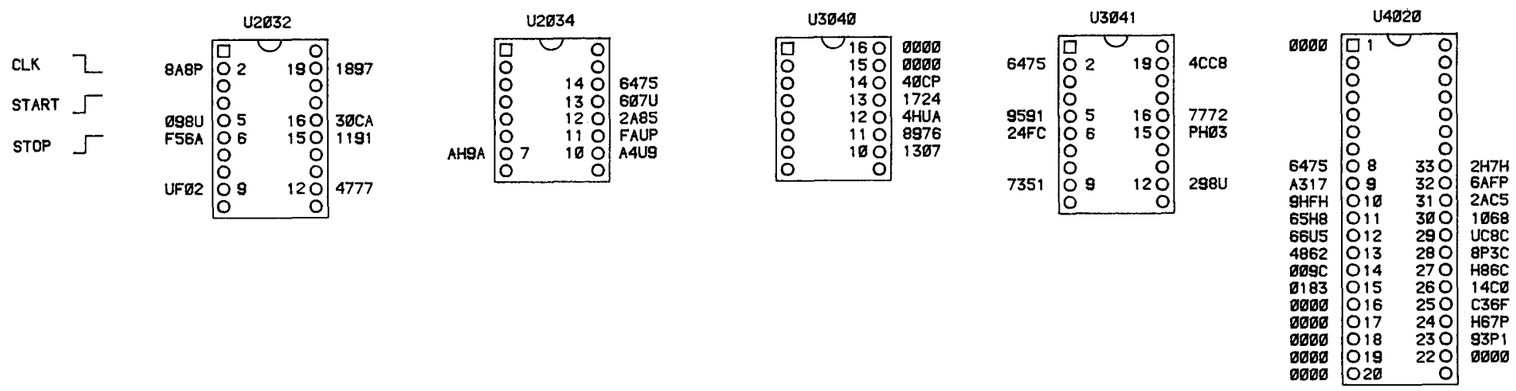

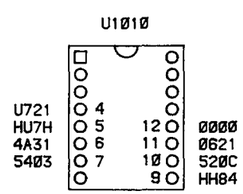

4598-24

Fig. 9-8. Signature analysis chart.

Scan by Zenith

REPLACEABLE MECHANICAL PARTS

PARTS ORDERING INFORMATION

Replacement parts are available from or through your local Tektronix, Inc. Field Office or representative.

Changes to Tektronix instruments are sometimes made to accommodate improved components as they become available, and to give you the benefit of the latest circuit improvements developed in our engineering department. It is therefore important, when ordering parts, to include the following information in your order: Part number, instrument type or number, serial number, and modification number if applicable.

If a part you have ordered has been replaced with a new or improved part, your local Tektronix, Inc. Field Office or representative will contact you concerning any change in part number.

Change information, if any, is located at the rear of this manual.

ITEM NAME

In the Parts List, an Item Name is separated from the description by a colon (:). Because of space limitations, an Item Name may sometimes appear as incomplete. For further Item Name identification, the U.S. Federal Cataloging Handbook H6-1 can be utilized where possible.

FIGURE AND INDEX NUMBERS

Items in this section are referenced by figure and index numbers to the illustrations.

INDENTATION SYSTEM

This mechanical parts list is indented to indicate item relationships. Following is an example of the indentation system used in the description column.

1 2 3 4 5 Name & Description

Assembly and/or Component
Attaching parts for Assembly and/or Component
- - - * - - -
Detail Part of Assembly and/or Component
Attaching parts for Detail Part
- - - * - - -
Parts of Detail Part
Attaching parts for Parts of Detail Part
- - - * - - -

Attaching Parts always appear in the same indentation as the item it mounts while the detail parts are indented to the right. Indented items are part of, and included with, the next higher indentation. The separation symbol - - - * - - - indicates the end of attaching parts.

Attaching parts must be purchased separately, unless otherwise specified.

ABBREVIATIONS

"	INCH
#	NUMBER SIZE
ACTR	ACTUATOR
ADPTR	ADAPTER
ALIGN	ALIGNMENT
AL	ALUMINUM
ASSEM	ASSEMBLED
ASSY	ASSEMBLY
ATTEN	ATTENUATOR
AWG	AMERICAN WIRE GAGE
BD	BOARD
BRKT	BRACKET
BRS	BRASS
BRZ	BRONZE
BSHG	BUSHING
CAB	CABINET
CAP	CAPACITOR
CER	CERAMIC
CHAS	CHASSIS
CKT	CIRCUIT
COMP	COMPOSITION
CONN	CONNECTOR
COV	COVER
CPLG	COUPLING
CRT	CATHODE RAY TUBE
DEG	DEGREE
DWR	DRAWER
ELCTRN	ELECTRON
ELEC	ELECTRICAL
ELCTLT	ELECTROLYTIC
ELEM	ELEMENT
EPL	ELECTRICAL PARTS LIST
EQPT	EQUIPMENT
EXT	EXTERNAL
FIL	FILLISTER HEAD
FLEX	FLEXIBLE
FLH	FLAT HEAD
FLTR	FILTER
FR	FRAME or FRONT
FSTNR	FASTENER
FT	FOOT
FXD	FIXED
GSKT	GASKET
HDL	HANDLE
HEX	HEXAGON
HEX HD	HEXAGONAL HEAD
HEX SOC	HEXAGONAL SOCKET
HLCPS	HELICAL COMPRESSION
HLEXT	HELICAL EXTENSION
HV	HIGH VOLTAGE
IC	INTEGRATED CIRCUIT
ID	INSIDE DIAMETER
IDENT	IDENTIFICATION
IMPLR	IMPELLER
IN	INCH
INCAND	INCANDESCENT
INSUL	INSULATOR
INTL	INTERNAL
LPHLDR	LAMPHOLDER
MACH	MACHINE
MECH	MECHANICAL
MTG	MOUNTING
NIP	NIPPLE
NON WIRE	NOT WIRE WOUND
OBD	ORDER BY DESCRIPTION
OD	OUTSIDE DIAMETER
OVH	OVAL HEAD
PH BRZ	PHOSPHOR BRONZE
PL	PLAIN or PLATE
PLSTC	PLASTIC
PN	PART NUMBER
PNH	PAN HEAD
PWR	POWER
RCPT	RECEPTACLE
RES	RESISTOR
RGD	RIGID
RLF	RELIEF
RTNR	RETAINER
SCH	SOCKET HEAD
SCOPE	OSCILLOSCOPE
SCR	SCREW
SE	SINGLE END
SECT	SECTION
SEMICOND	SEMICONDUCTOR
SHLD	SHIELD
SHLDR	SHOULDERED
SKT	SOCKET
SL	SLIDE
SLFLKG	SELF-LOCKING
SLVG	SLEEVING
SPR	SPRING
SQ	SQUARE
SST	STAINLESS STEEL
STL	STEEL
SW	SWITCH
T	TUBE
TERM	TERMINAL
THD	THREAD
THK	THICK
TNSN	TENSION
TPG	TAPPING
TRH	TRUSS HEAD
V	VOLTAGE
VAR	VARIABLE
W/	WITH
WSHR	WASHER
XFMR	TRANSFORMER
XSTR	TRANSISTOR

Scan by Zenith

CROSS INDEX—MFR. CODE NUMBER TO MANUFACTURER

Mfr. Code	Manufacturer	Address	City, State, Zip
000BH	FAB-TEK	17 SUGAR HALLOW ROAD	DANBURY, CT 06810
000CY	NORTHWEST FASTENER SALES, INC.	7923 SW CIRRUS DRIVE	BEAVERTON, OR 97005
000EX	O'HARA METAL PRODUCT COMPANY	542 BRANNAN STREET	SAN FRANCISCO, CA 94107
04963	MINNESOTA MINING AND MFG. CO., ADHESIVES COATINGS AND SEALERS DIVISION	3M CENTER	ST. PAUL, MN 55101
06915	RICHCO PLASTIC CO.	5825 N. TRIPP AVE.	CHICAGO, IL 60646
09922	BURNDY CORPORATION	RICHARDS AVENUE	NORWALK, CT 06852
13511	AMPHENOL CARDRE DIV., BUNKER RAMO CORP.		LOS GATOS, CA 95030
22526	BERG ELECTRONICS, INC.	YOUK EXPRESSWAY	NEW CUMBERLAND, PA 17070
22670	G.M. NAMEPLATE, INC.	2040 15TH AVENUE WEST	SEATTLE, WA 98119
23740	AMUNEAL MFG., CORP.	4737 DARRAH	PHILADELPHIA, PA 19124
24931	SPECIALITY CONNECTOR CO., INC.	2620 ENDRESS PLACE	GREENWOOD, IN 46142
49671	RCA CORPORATION	30 ROCKEFELLER PLAZA	NEW YORK, NY 10020
71785	TRW, CINCH CONNECTORS	1501 MORSE AVENUE	ELK GROVE VILLAGE, IL 60007
73743	FISCHER SPECIAL MFG. CO.	446 MORGAN ST.	CINCINNATI, OH 45206
78189	ILLINOIS TOOL WORKS, INC. SHAKEPROOF DIVISION	ST. CHARLES ROAD	ELGIN, IL 60120
78471	TILLEY MFG. CO.	900 INDUSTRIAL RD.	SAN CARLOS, CA 94070
79136	WALDES, KOHINOOR, INC.	47-16 AUSTEL PLACE	LONG ISLAND CITY, NY 11101
80009	TEKTRONIX, INC.	P O BOX 500	BEAVERTON, OR 97077
82465	MACLEAN FOGG LOCKNUT CO.	1000 ALLANSON ROAD	MUNDELEIN, IL 60060
83385	CENTRAL SCREW CO.	2530 CRESCENT DR.	BROADVIEW, IL 60153
86928	SEASTROM MFG. COMPANY, INC.	701 SONORA AVENUE	GLENDALE, CA 91201
93907	TEXTRON INC. CAMCAR DIV	600 18TH AVE	ROCKFORD, IL 61101
98159	RUBBER TECK, INC.	19115 HAMILTON AVE., P O BOX 389	GARDENA, CA 90247

Scan by Zenith

Fig. & Index No.	Tektronix Part No.	Serial/Model No. Eff	Dscont	Qty	1 2 3 4 5 Name & Description	Mfr Code	Mfr Part Number
1-1	214-3364-00			4	FASTENER,LATCH:ACETAL,SIL GRAY	80009	214-3364-00
-2	105-0932-00			4	LATCH,PANEL:SIDE	80009	105-0932-00
-3	342-0540-00			2	INSULATOR,PLATE:SHIELD	80009	342-0540-00
-4	337-2807-01			2	SHIELD,ELEC:SIDE,PLUG-IN UNIT W/INSUL	80009	337-2807-01
-5	334-5129-00			1	MARKER,IDENT:		
	----- -----				(STANDARD ONLY)		
	334-1377-00			1	MARKER,IDENT:MKD IDENTIFICATION NO.	80009	334-1377-00
	----- -----				(OPTION 02 ONLY)		
-6	378-0159-00			1	LENS,LED DSPL:	80009	378-0159-00
-7	366-1190-02			1	KNOB:0.252 ID X0.706 OD,0.6H	80009	366-1190-02
	213-0153-00			2	.SETSCREW:5-40 X 0.125,STL BK OXD,HEX	000CY	ORD BY DESCR
-8	344-0195-01			1	CLIP,ELECTRICAL:CAM SHAFT	80009	344-0195-01
-9	358-0029-00			1	BSHG,MACH.THD:HEX,0.375-32 X 0.438"LONG	80009	358-0029-00
					**********(ATTACHING PARTS)**********		
-10	210-0590-00			1	NUT,PLAIN,HEX.:0.375-32 X 0.438" BRS	73743	2X28269-402
-11	210-0978-00			1	WASHER,FLAT:0.375 ID X 0.50 INCH OD,STL	78471	ORD BY DESCR
					**********(END ATTACHING PARTS)*********		
-12	136-0731-00			2	JACK,TIP:BLACK	80009	136-0731-00
					**********(ATTACHING PARTS)**********		
-13	210-0465-00			4	NUT,PLAIN,HEX.:0.25-32 X 0.375 INCH BRS	73743	3095-402
-14	210-0223-00			1	TERMINAL,LUG:0.25 INCH DIA,SE	86928	5441-37
-15	342-0137-00			2	WASHER,NONMETAL:0.266 ID X0.50 OD	80009	342-0137-00
-16	210-0978-00			2	WASHER,FLAT:0.375 ID X 0.50 INCH OD,STL	78471	ORD BY DESCR
					**********(END ATTACHING PARTS)*********		
-17	366-1851-01			1	KNOB,LATCH:IVORY,GY,0.625 X 0.25 X 1.0	80009	366-1851-01
-18	105-0865-00			1	BAR,LATCH RLSE:	80009	105-0865-00
-19	105-0866-00			1	LATCH,RETAINING:SAFETY	80009	105-0866-00
-20	214-3143-00			1	SPRING,HLEXT:0.125 OD X 0.545 L, X LOOP	80009	214-3143-00
-21	200-0103-00			1	NUT,PLAIN,KNURL:0.25-28 X 0.375" OD,BRASS	80009	200-0103-00
-22	355-0507-00			1	STUD,SHOULDERED:BINDING POST	80009	355-0507-00
					**********(ATTACHING PARTS)**********		
-23	210-0455-00			1	NUT,PLAIN,HEX.:0.25-28 X 0.375 INCH,BRASS	73743	3089-402
-24	210-0223-00			1	TERMINAL,LUG:0.25 INCH DIA,SE	86928	5441-37
					**********(END ATTACHING PARTS)*********		
-25	131-0955-00			2	CONN,RCPT,ELEC:BNC,FEMALE	13511	31-279
					**********(ATTACHING PARTS)**********		
-26	210-0255-00			1	TERMINAL,LUG:0.391 ID,LOCKING,BRS CD PL	80009	210-0255-00
					**********(END ATTACHING PARTS)*********		
-27	131-1315-01			1	CONN,RCPT,ELEC:BNC,FEMALE	24931	28JR 306-1
-28	333-3059-00			1	FRONT PNL ASSY:	80009	333-3059-00
	----- -----				(STANDARD ONLY)		
	333-3097-00			1	FRONT PNL ASSY:	80009	333-3097-00
	----- -----				(OPTION 02 ONLY)		
					**********(ATTACHING PARTS)**********		
-29	213-0875-00			2	SCR ASSEM WSHR:6-32 X 0.5,TAPTITE,PNH	93907	ORD BY DESCR
-30	210-1365-00			2	WASHER,FLAT:0.141 ID X 0.5 THK,AL,0.266	80009	210-1365-00
					**********(END ATTACHING PARTS)*********		
-31	407-3084-00			1	BRACKET,ANGLE:CKT BOARD	80009	407-3084-00
					**********(ATTACHING PARTS)**********		
-32	211-0534-00			1	SCR,ASSEM,WSHR:6-32 X 0.312 INCH,PNH STL	83385	ORD BY DESCR
-33	210-0586-00			2	NUT,PL,ASSEM WA:4-40 X 0.25,STL,CD PL	78189	211-041800-00
					**********(END ATTACHING PARTS)*********		
-34	407-3085-00			1	BRACKET,ANGLE:CKT BOARD	80009	407-3085-00
					**********(ATTACHING PARTS)**********		
-35	211-0661-00			2	SCREW,MACHINE:4-40 X 0.25 INCH,PNH,STL	78189	ORD BY DESCR
-36	210-0586-00			1	NUT,PL,ASSEM WA:4-40 X 0.25,STL,CD PL	78189	211-041800-00
					**********(END ATTACHING PARTS)*********		
-37	----- -----			1	CKT BOARD ASSY:DISPLSY(SEE A10 REPL)		
					**********(ATTACHING PARTS)**********		
-38	211-0661-00			2	SCREW,MACHINE:4-40 X 0.25 INCH,PNH,STL	78189	ORD BY DESCR
					**********(END ATTACHING PARTS)*********		
	----- -----				CKT BOARD ASSY INCLUDES:		
-39	378-0890-00			1	.LENS,LIGHT:CLEAR	22670	ORD BY DESCR

Scan by Zenith

Fig. & Index No.	Tektronix Part No.	Serial/Model No. Eff	Dscont	Qty	1 2 3 4 5 Name & Description	Mfr Code	Mfr Part Number
1-					.**********(ATTACHING PARTS)**********		
-40	211-0051-00			2	.SCREW,MACHINE: 4-40 X 0.188 L,FLH	82465	ORD BY DESCR
					.**********(END ATTACHING PARTS)*********		
-41	220-0706-00			2	.NUT,SLEEVE:4-40 X 0.188 HEX,BRS,CU-SN	80009	220-0706-00
					.**********(ATTACHING PARTS)**********		
-42	211-0007-00			2	.SCREW,MACHINE:4-40 X 0.188,PNH STL,CD PL	83385	ORD BY DESCR
-43	210-0054-00			2	.WASHER,LOCK:SPLIT,0.118 ID X 0.212"OD	83385	ORD BY DESCR
					.**********(END ATTACHING PARTS)*********		
-44	----- -----			1	.TERM SET,PIN:(SEE A10J2011,J2012,		
	----- -----				.J2012 & J2040 REPL)		
-45	----- -----			1	.CONN,RCPT,ELEC:(SEE A10J2030 REPL)		
-46	214-3089-00			1	LOCKOUT,PLUG-IN:PLASTIC	80009	214-3089-00
-47	214-1061-00			2	SPRING,GROUND:FLAT	80009	214-1061-00
-48	426-1997-00			1	FR SECT,PLUG-IN:TOP		
					**********(ATTACHING PARTS)**********		
-49	211-0541-00			2	SCREW,MACHINE:6-32 X 0.25"100 DEG,FLH STL	83385	ORD BY DESCR
					**********(END ATTACHING PARTS)*********		
-50	----- -----			1	CKT BOARD ASSY:GPIB(SEE A16 REPL)		
					**********(ATTACHING PARTS)**********		
-51	211-0661-00			5	SCREW,MACHINE:4-40 X 0.25 INCH,PNH,STL	78189	ORD BY DESCR
					**********(END ATTACHING PARTS)*********		
	----- -----				CKT BOARD ASSY INCLUDES:		
-52	----- -----			1	.CONN,RCPT,ELEC:(SEE A16P2060 REPL)		
-53	136-0755-00			1	.SKT,PL-IN ELEK:MICROCIRCUIT,28 DIP	09922	DILB28P-108
-54	----- -----			1	.CONN,RCPT,ELEC:(SEE A16J2050 REPL)		
-55	136-0757-00			3	.SKT,PL-IN ELEK:MICROCKT,40 PIN	09922	DILB40P-108
-56	----- -----			1	.CONN,RCPT,ELEC:(SEE A16P1050 REPL)		
-57	136-0729-00			1	.SKT,PL-IN ELEK:MICROCKT,16 CONTACT	09922	DILB16P-108T
-58	----- -----			1	.CONN,RCPT,ELEC:(SEE A16P1040 REPL)		
-59	----- -----			4	.TERM,TEST POINT:(SEE A16TP2010,TP3031,		
	----- -----				.TP3032 & TP3033 REPL)		
-60	136-0752-00			2	.SKT,PL-IN ELEK:MICROCIRCUIT,20 DIP	09922	DILB20P-108
-61	----- -----			3	.BUS,COND:(SEE A16P1010,P3021,P3023 REPL)		
-62	----- -----			25	.TERM,PIN:(SEE A16J1010,J2034,J3021,		
	----- -----				.J3023,J3060 REPL)		
-63	129-0420-00			5	POST,ELEC-MECH:0.575 LONG X 0.188 I HEX	80009	129-0420-00
-64	----- -----			1	CKT BOARD ASSY:LOGIC(SEE A12 REPL)		
					**********(ATTACHING PARTS)**********		
-65	211-0292-00			4	SCR,ASSEM WSHR:4-40 X 0.29,BRS NI PL	78189	ORD BY DESCR
-66	211-0661-00			5	SCREW,MACHINE:4-40 X 0.25 INCH,PNH,STL	78189	ORD BY DESCR
					**********(END ATTACHING PARTS)*********		
	----- -----				CKT BOARD ASSY INCLUDES:		
-67	----- -----			1	.SWITCH,PUSH:(SEE A12S3141 REPL)		
-68	361-0385-00			4	.SPACER,PB SW:0.164 INCH LONG	80009	361-0385-00
-69	361-0382-00			4	.SPACER,PB SW:BROWN,0.275 INCH LONG	80009	361-0382-00
-70	----- -----			1	.SWITCH,PUSH:(SEE A12S6181 REPL)		
-71	361-0385-00			4	.SPACER,PB SW:0.164 INCH LONG	80009	361-0385-00
-72	361-0382-00			4	.SPACER,PB SW:BROWN,0.275 INCH LONG	80009	361-0382-00
-73	131-0604-00			6	.CONTACT,ELEC:CKT BD SW,SPR,CU BE	80009	131-0604-00
-74	131-0963-00			1	.CONTACT,ELEC:GROUNDING	000EX	ORD BY DESCR
	----- -----			1	.SWITCH,CAM:(SEE A12S4171 REPL)		
-75	200-2488-00			1	..COVER,CAM SW:ALUMINUM	80009	200-2488-00
					..**********(ATTACHING PARTS)**********		
-76	211-0292-00			4	..SCR,ASSEM WSHR:4-40 X 0.29,BRS NI PL	78189	ORD BY DESCR
					..*********(END ATTACHING PARTS)*********		
-77	354-0390-00			1	..RING,RETAINING:0.338 ID X 0.025" THK,STL	79136	5100-37MD
-78	131-0963-00			1	..CONTACT,ELEC:GROUNDING	000EX	ORD BY DESCR
-79	210-0406-00			2	..NUT,PLAIN,HEX:4-40 X 0.188,BRS,CD PL	73743	12161-50
-80	401-0178-01			1	..BEARING,CAM SW:CENTER/REAR	80009	401-0178-01
-81	214-1139-02			2	..SPRING,FLAT:GREEN COLORED	80009	214-1139-02
-82	214-1752-00			2	..ROLLER,DETENT:	80009	214-1752-00
-83	384-0878-30			1	..SHAFT,CA SW:OUTER CONCENTRIC W/DR	80009	384-0878-30
-84	105-0850-00			1	..ACTUATOR,CAM SW:LEVEL RANGE	80009	105-0850-00
-85	210-0406-00			2	..NUT,PLAIN,HEX:4-40 X 0.188,BRS,CD PL	73743	12161-50

Scan by Zenith

Fig. & Index No.	Tektronix Part No.	Serial/Model No. Eff	Dscont	Qty	1 2 3 4 5 Name & Description	Mfr Code	Mfr Part Number
1-86	401-0180-00			1	..BEARING,CAM SW:FRONT & REAR	80009	401-0180-00
-87	----- -----			2	.TERM,TEST POINT:(SEE A12TP3131,TP8161		
	----- -----				.REPL)		
-88	131-1857-00			1	.TERM. SET,PIN:36/0.025 SQ PIN,ON 0.1 CTRS	22526	65500136
-89	131-1934-00			1	.TERM. SET,PIN:1 X 36,0.1 CTR,0.9 L	22526	65539-001
-90	131-1426-00			1	.TERM SET,PIN:(36) 0.025 SQ RTANG,0.25L	22526	65524-136
-91	366-1559-01			1	PUSH BUTTON:GRAY,0.43 L X 0.18 W X 0.18	80009	366-1559-01
-92	366-1512-00			4	PUSH BUTTON:GRAY,0.18 SQ X 0.83 INCH LG	80009	366-1512-00
-93	384-1341-00			4	EXTENSION SHAFT:2.183 INCH LONG,OFFSET	80009	384-1341-00
-94	----- -----			1	CKT BOARD ASSY:IMD(SEE A13 REPL)		
					**********(ATTACHING PARTS)**********		
-95	211-0661-00			3	SCREW,MACHINE:4-40 X 0.25 INCH,PNH,STL	78189	ORD BY DESCR
					**********(END ATTACHING PARTS)*********		
	----- -----				CKT BOARD ASSY INCLUDES:		
-96	----- -----			1	.SKT,PL-IN ELEK:(SEE A13P4040 REPL)		
-97	----- -----			1	.BUS,COND:(SEE A13P1053 REPL)		
-98	----- -----			1	.TERM SET,PIN:(SEE A13J1053 REPL)		
-99	----- -----			1	.TERM SET,PIN:(SEE A13J8011 REPL)		
-100	----- -----			1	CKT BOARD ASSY:INPUT&NOTCH(SEE A14 REPL)		
					**********(ATTACHING PARTS)**********		
-101	211-0661-00			2	SCREW,MACHINE:4-40 X 0.25 INCH,PNH,STL	78189	ORD BY DESCR
-102	210-0586-00			1	NUT,PL,ASSEM WA:4-40 X 0.25,STL,CD PL	78189	211-041800-00
					**********(END ATTACHING PARTS)*********		
	----- -----				CKT BOARD ASSY INCLUDES:		
-103	----- -----			3	.TERM,PIN:(SEE A14J4070 REPL)		
-104	----- -----			1	.SWITCH,PUSH:(SEE A14S2070 REPL)		
-105	361-0385-00			4	.SPACER,PB SW:0.164 INCH LONG	80009	361-0385-00
-106	361-0383-00			4	.SPACER,PB SW:CHARCOAL,0.33 INCH LONG	80009	361-0383-00
-107	136-0727-00			1	.SKT,PL-IN ELEK:MICROCKT,8 CONTACT	09922	DILB8P-108
-108	136-0728-00			2	.SKT,PL-IN ELEK:MICROCKT,14 CONTACT	09922	DILB14P-108
-109	346-0032-00			4	.STRAP,RTNING:0.075 DIA X 4.0 L,MLD RBR	98159	2859-75-4
-110	----- -----			23	.TERM,PIN:(SEE A14J1030,J1041,J1060,		
	----- -----				.J1021 REPL)		
-111	337-2139-00			3	.SHIELD,ELEC:INPUT COUPLING SWITCH	80009	337-2139-00
-112	----- -----			1	.CONN,RCPT,ELEC:(SEE A14J1042,J1043,		
	----- -----				.J1070 REPL)		
-113	----- -----			1	TERM,TEST PIONT:(SEE A14TP1030 REPL)		
-114	136-0252-07			12	.SOCKET,PIN CONN:W/O DIMPLE	22526	75060-012
-115	366-1512-00			2	PUSH BUTTON:GRAY,0.18 SQ X 0.83 INCH LG	80009	366-1512-00
-116	366-1512-01			2	PUSH BUTTON:CHARCOAL GY,0.18 SQ X 0.8	80009	366-1512-01
-117	129-0457-00			3	SPACER,POST:1.07L,W/4-40 TAP 1 END	80009	129-0457-00
-118	129-0765-00			2	SPACER,POST:0.545 L,W/4-40 THD BOTH END	80009	129-0765-00
-119	385-0107-00			2	SPACER,POST:0.75 L W/4-40 THD THRU,NYL	80009	385-0107-00
-120	337-3140-00			1	SHIELD,ELEC:MAIN BOARD	80009	337-3140-00
-121	----- -----			1	CKT BOARD ASSY:MAIN(SEE A15 REPL)		
					**********(ATTACHING PARTS)**********		
-122	211-0121-00			5	SCR,ASSEM WSHR:4-40 X 0.438 INCH,PNH BRS	83385	ORD BY DESCR
					**********(END ATTACHING PARTS)*********		
	----- -----				CKT BOARD ASSY INCLUDES:		
-123	----- -----			1	.SWITCH,PUSH:(SEE A15S1010 REPL)		
-124	361-0573-00			4	.SPACER,SLEEVE:0.234 L,BLACK PP	80009	361-0573-00
-125	----- -----			1	.SWITCH,PUSH:(SEE A15S1011 REPL)		
-126	361-0385-00			4	.SPACER,PB SW:0.164 INCH LONG	80009	361-0385-00
-127	131-1425-00			1	.TERM SET,PIN:(36) 0.025 SQ RTANG,0.15L	22526	65521-136
	131-1426-00			1	.TERM SET,PIN:(36) 0.025 SQ RTANG,0.25L	22526	65524-136
-128	136-0729-00			1	.SKT,PL-IN ELEK:MICROCKT,16 CONTACT	09922	DILB16P-108T
-129	----- -----			2	.CONN,RCPT,ELEC:(SEE A15P1043,P1070 REPL)		
-130	131-1426-00			1	.TERM SET,PIN:(36) 0.025 SQ RTANG,0.25L	22526	65524-136
-131	136-0241-00			1	.SKT,PL-IN ELEK:MICROCIRCUIT,10 CONT,PCB M	71785	133-99-12-064
-132	214-2518-00			1	.HEAT SINK,XSTR:T0-220 OR T0-202	000BH	106B-B-HT
-133	344-0154-03			6	.CLIP,ELECTRICAL:FUSE,CKT BD MT	80009	344-0154-03
-134	----- -----			4	.TERM,TEST POINT:(SEE A15TP3041,TP3042,		
	----- -----				.TP3043,TP3044 REPL)		
-135	253-0135-00			FT	.PLASTIC STRIP:PRESS,SENS,ADH CTD BS	04963	ORD BY DESCR

Scan by Zenith

Fig. & Index No.	Tektronix Part No.	Serial/Model No. Eff	Dscont	Qty	1 2 3 4 5 Name & Description	Mfr Code	Mfr Part Number
1-136	----- -----			1	CONN,RCPT,ELEC:(SEE A15P1042 REPL)		
-137	366-1559-00			5	PUSH BUTTON:SIL GY,0.18 SQ X 0.43	80009	366-1559-00
-138	384-1136-00			5	EXTENSION SHAFT:0.95 INCH LONG	80009	384-1136-00
-139	366-1559-02			5	PUSH BUTTON:CHARCOAL,0.18 SQ X 0.43	80009	366-1559-02
-140	351-0672-00			4	GUIDE CKT BOARD:PLASTIC	80009	351-0672-00
-141	351-0604-00			4	GUIDE,CKT BD:PLASTIC	80009	351-0604-00
-142	214-3089-00			1	LOCKOUT,PLUG-IN:PLASTIC	80009	214-3089-00
-143	426-1999-01			1	FR SECT,PL-IN:BOTTOM W/LATCH	80009	426-1999-01
					**********(ATTACHING PARTS)**********		
-144	211-0101-00			1	SCREW,MACHINE:4-40 X 0.25,FLH,100 DEG,STL	83385	ORD BY DESCR
					**********(END ATTACHING PARTS)*********		
-145	337-2917-00			1	SHIELD,ELEC:TRANSFORMER	23740	OBD
					**********(ATTACHING PARTS)**********		
-146	211-0008-00			3	SCREW,MACHINE:4-40 X 0.250,PNH,STL,POZ	83385	ORD BY DESCR
-147	210-1178-00			2	WASHER,SHLDR:U/W T0-220 TRANSISTOR	49671	DF137A
-148	210-0586-00			3	NUT,PL,ASSEM WA:4-40 X 0.25,STL,CD PL	78189	211-041800-00
					**********(END ATTACHING PARTS)*********		
-149	342-0573-00			1	INSULATOR,SHLD:PLASTIC	80009	342-0573-00
-150	255-0581-00			FT	PLASTIC CHANNEL:0.156 X 0.156,POLYETHYLENE	06915	PGS-2
-151	333-0247-01			1	PANEL,REAR:W/INSULATOR	80009	333-0247-01
					**********(ATTACHING PARTS)**********		
-152	213-0868-00			2	SCREW,TPG,TF:6-32 X 0.375 L,FILM,STEEL	93907	ORD BY DESCR
-153	386-3657-01			2	SUPPORT,PLUG IN:	93907	OBD
					**********(END ATTACHING PARTS)*********		

Scan by Zenith

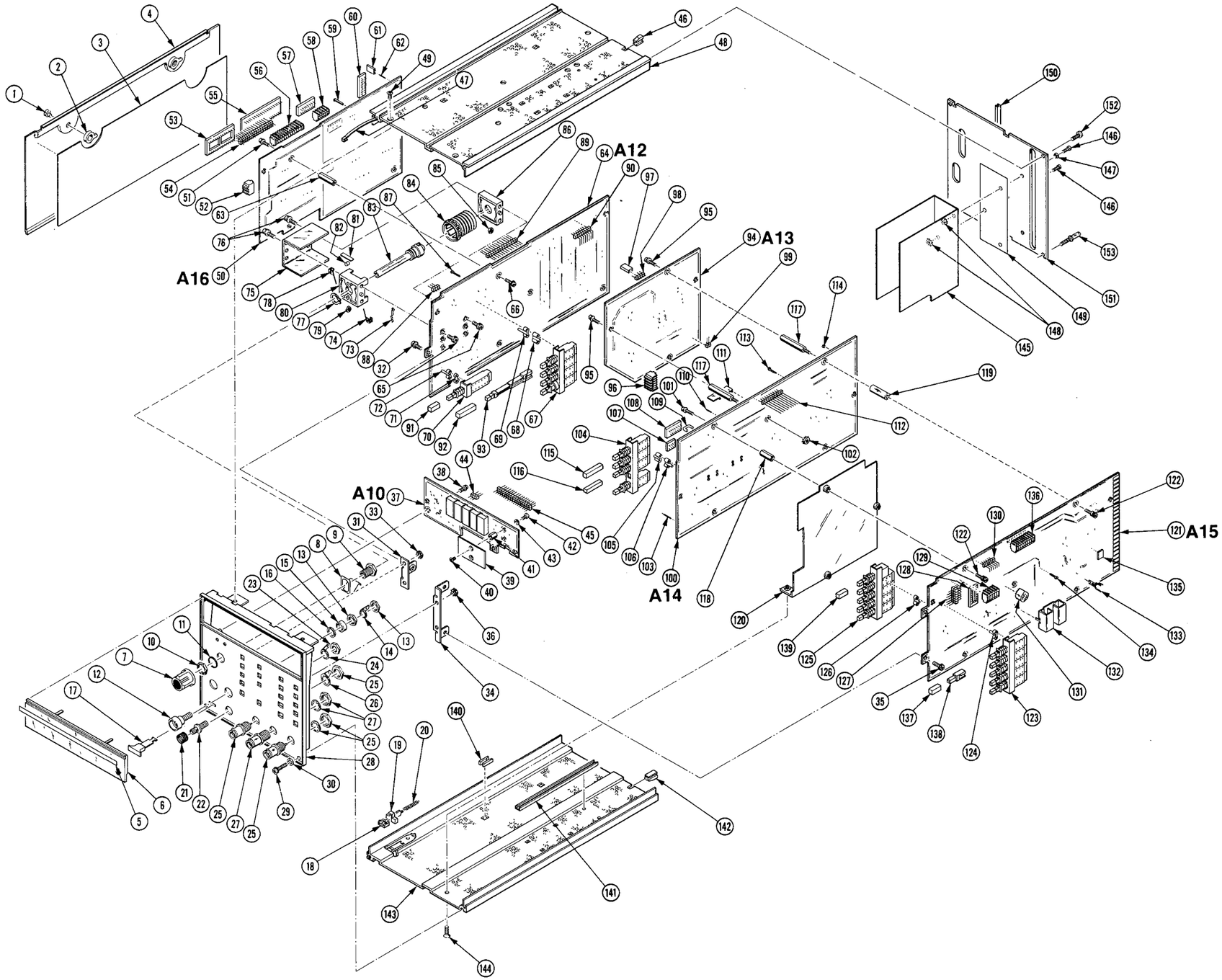

FIG. 1 EXPLODED

AA5001

Scan by Zenith

Fig. & Index No.	Tektronix Part No.	Serial/Model No. Eff	Dscont	Qty	1 2 3 4 5	Name & Description	Mfr Code	Mfr Part Number
.						STANDARD ACCESSORIES		
.								
	070-4597-00			1		MANUAL,TECH:REFERENCE	80009	070-4597-00
	070-4598-01			1		MANUAL,TECH:INSTRUCTION	80009	070-4598-01
	070-4788-00			1		MANUAL,TECH:INSTRUCTION	80009	070-4788-00

Scan by Zenith

MANUAL CHANGE INFORMATION

At Tektronix, we continually strive to keep up with latest electronic developments by adding circuit and component improvements to our instruments as soon as they are developed and tested.

Sometimes, due to printing and shipping requirements, we can't get these changes immediately into printed manuals. Hence, your manual may contain new change information on following pages.

A single change may affect several sections. Since the change information sheets are carried in the manual until all changes are permanently entered, some duplication may occur. If no such change pages appear following this page, your manual is correct as printed.

Scan by Zenith

Tektronix®
COMMITTED TO EXCELLENCE

MANUAL CHANGE INFORMATION

Date: 9-28-84 **Change Reference:** C4/0984

Product: AA 5001 Programmable Distortion Analyzer with Option 2 **Manual Part No.:** 070-4598-01

DESCRIPTION PG 76

REPLACEABLE ELECTRICAL PARTS LIST CORRECTION

DELETE:

Component No.	Tektronix Part No.	Serial Model No. Eff	Dscont	Name & Description
A14R4010	307-0700-00			CPLR,OPTOELECTR:140 OHM,40MA
A14R4011	307-0700-00			CPLR,OPTOELECTR:140 OHM,40MA
A14R5010	307-0700-00			CPLR,OPTOELECTR:140 OHM,40MA
A14R5041	307-0700-00			CPLR,OPTOELECTR:140 OHM,40MA
A14R5051	307-0700-00			CPLR,OPTOELECTR:140 OHM,40MA

ADD:

Component No.	Tektronix Part No.	Serial Model No. Eff	Dscont	Name & Description
A14U4010	307-0700-00			CPLR,OPTOELECTR:140 OHM,40MA
A14U4011	307-0700-00			CPLR,OPTOELECTR:140 OHM,40MA
A14U5010	307-0700-00			CPLR,OPTOELECTR:140 OHM,40MA
A14U5041	307-0700-00			CPLR,OPTOELECTR:140 OHM,40MA
A14U5051	307-0700-00			CPLR,OPTOELECTR:140 OHM,40MA

Scan by Zenith

Tektronix®
COMMITTED TO EXCELLENCE

MANUAL CHANGE INFORMATION

Date: 11-29-84 **Change Reference:** C5/1184

Product: AA 5001 Programmable Distotion Analyzer with Option 2 **Manual Part No.:** 070-4598-01

DESCRIPTION PG 76

SPECIFICATION CORRECTION

The specification for "Residual THD + N" under "TOTAL HARMONIC DISTORTION PLUS NOISE FUNCTION" on page 1-3 should read as follows:

Characteristics	Performance Requirement	Supplemental Information
Residual THD + N ($V_{in} \geqslant 250$ mV, $T \leqslant +40°C$)		System specification with any SG 5010 or SG 505 Oscillator; all distortion, noise, and nulling error sources combined.
20 Hz to 20 kHz with 80 kHz noise limiting filter	≤0.0032% (−90 dB)	
10 Hz to 100 kHz, no filter	≤0.010% (−80 dB)	