Tektronix®

COMMITTED TO EXCELLENCE

WARNING

THE FOLLOWING SERVICING INSTRUCTIONS ARE FOR USE BY QUALIFIED PERSONNEL ONLY. TO AVOID PERSONAL INJURY, DO NOT PERFORM ANY SERVICING OTHER THAN THAT CONTAINED IN OPERATING INSTRUCTIONS UNLESS YOU ARE QUALIFIED TO DO SO.

PLEASE CHECK FOR CHANGE INFORMATION AT THE REAR OF THIS MANUAL.

492/492P

SPECTRUM ANALYZER

PORTABLE/RACKMOUNT/BENCHTOP

(SN B029999 & BELOW)

SERVICE VOLUME 1

INSTRUCTION MANUAL

Tektronix, Inc.
P.O. Box 500
Beaverton, Oregon 97077

070-2727-03
Product Group 26

Serial Number _____

First Printing JUL 1979
Revised AUG 1981

TABLE OF CONTENTS

This manual is divided into two volumes as follows:

VOLUME 1

	Page
SERVICING SAFETY SUMMARY	viii
Section 1 GENERAL INFORMATION AND SPECIFICATION	
Introduction	1-1
Product Service	1-1
Instrument Construction	1-1
Elapsed Time Meter	1-2
Changing Power Input Range	1-2
Replacing Fuses	1-2
Selected Components	1-2
Component Circuit Numbering Scheme	1-2
Firmware Versions and Error Message Readout	1-3
Specification	1-3
Electrical Characteristics	1-3
Frequency Related	1-3
Amplitude Related	1-7
Input Signal Characteristics	1-9
Output Signal Characteristics	1-10
General Characteristics	1-11
Power Requirements	1-11
Environmental Characteristics	1-12
Physical Characteristics	1-13
ACCESSORIES	1-14
OPTIONS	1-14
Section 2 INSTALLATION AND REPACKAGING	
Introduction	2-1
Unpacking and Initial Inspection	2-1
Preparation for Use	2-1
Power Source and Power Requirements	2-1
Repackaging for Shipment	2-1

	Page
Section 3 CALIBRATION	
Introduction	3-1
History Information	3-1
Equipment Required	3-1
Removing the Cabinet	3-1
PERFORMANCE CHECK PROCEDURE	3-4
Introduction	3-4
Incoming Inspection Test	3-4
Preliminary Preparation	3-4
1. Check Operation of Front Panel Pushbuttons and Controls	3-4
2. Check Frequency Readout Accuracy	3-6
3. Check Calibrator	3-9
4. Check RF Attenuator	3-11
5. Check IF Gain Accuracy	3-12
6. Check Display Accuracy and Range	3-14
7. Amplitude Variation with Change in Resolution Bandwidth	3-14
8. Check Frequency Response	3-15
9. Check Preselector Ultimate Rejection	3-20
10. Check Frequency Span/Div Accuracy	3-20
11. Check Time/Div Accuracy	3-22
12. Check Pulse Stretcher	3-23
13. Check Resolution Bandwidth and Shape Factor	3-23
14. Check Sensitivity	3-24
15. Frequency Drift	3-25
16. Check Residual FM	3-26
17. Check Intermodulation Distortion	3-26
18. Check Harmonic Distortion	3-27

TABLE OF CONTENTS (cont)

Page

Section 3 CALIBRATION (cont)

19. Check Phase Lock Noise Sidebands 3-29
20. Check Residual Response . . . 3-29
21. Check LO Emission Out the RF INPUT 3-29
22. Check Digital Storage (Option 2) 3-29
23. Check Triggering Operation and Sensitivity 3-30
24. Check External Sweep Operation 3-31
25. Check Vertical Output 3-31
26. Check Horizontal Signal Output 3-33

ADJUSTMENT PROCEDURE 3-34

1. Adjust and Check Low Voltage Power Supply 3-35
2. Crt Display 3-35
3. Deflection Amplifier (gain and frequency response) 3-38
4. Adjust Sweep Timing 3-40
5. Calibrate 1st LO System and Center Frequency Control 3-41

6A. Check/Adjust the Cavity 2nd LO . . 3-45

6. Check 2nd LO Frequency and Tuning Range 3-46
7. Adjust 1st Converter Bias 3-49
8. Baseline Leveling 3-51
9. Log Amplifier Calibration 3-54
10. Calibrating Resolution Bandwidth and Shape Factor 3-56
11. Presetting Variable Resolution Gain and Band Leveling 3-59
12. Calibrator Output Level 3-60
13. IF Gain Calibration 3-60
14. Digital Storage Calibration 3-61
15. Setting B—SAVE A Reference Level 3-63
16. Band Leveling for Coaxial Bands (Bands 1—5) 3-64
17. Band Leveling for Waveguide Bands (Bands 6—11) 3-65
18. Preselector Driver (Option 1) Calibration 3-66
19. Phase Lock Calibration 3-68

Page

Section 4 MAINTENANCE

Introduction 4-1
Static Sensitive Components 4-1

PREVENTIVE MAINTENANCE 4-2

Elapsed Time Meter 4-2
Cleaning 4-2
Lubrication 4-2
Service Fixtures and Tools for Maintenance 4-2
Visual Inspection 4-3
Transistor and Integrated Circuit Checks 4-3
Performance Checks and Recalibration 4-3

TROUBLESHOOTING 4-3

Troubleshooting Aids 4-3
General Troubleshooting Techniques 4-6

CORRECTIVE MAINTENANCE 4-6

Obtaining Replacement Parts 4-6
Parts Repair and Return Program . . 4-7
Soldering Technique 4-7
Replacing the Square Pin for Multi-pin Connectors 4-7
Selected Components 4-7
Installing Matched Crystals for the VR Filters 4-7
Replacing EPROM's or ROM's 4-8
Firmware Version and Error Message Readout 4-8
Servicing the VR Module 4-8

REPLACING ASSEMBLIES AND SUBASSEMBLIES 4-8

Removing and Replacing Semi-rigid Coaxial Cables 4-8
Replacing the Dual Diode Assembly 4-8
Replacing the Crt 4-9
Repairing the Crt Trace Rotation Coil 4-12
Front Panel Assembly 4-12
Front Panel Board 4-12
Replacing Front Panel Push Button Switches 4-13
Main Power Supply Module 4-13
High Voltage Power Supply 4-13

TABLE OF CONTENTS (cont)

Page

Section 4 MAINTENANCE (cont)

Replacing the 1st (YIG) Local Oscillator Interface Board 4-13
Compliant Mounted Fan 4-14
MAINTENANCE ADJUSTMENTS 4-16
110 MHz IF Assembly Return Loss Calibration 4-16
2072 MHz 2nd Converter 4-17
Four Cavity Filter 4-17
Mixer 4-17
110 MHz Three Cavity Filter 4-17
829 MHZ CONVERTER MAINTENANCE 4-18
1. To gain access to the LO section 4-18
2. To gain access to the IF section 4-18
3. 719 MHz Oscillator Range Adjustment 4-18
4. 829 MHz Coaxial Bandpass Filter Adjustment 4-19
MICROCOMPUTER SYSTEM MAINTENANCE 4-23
Memory Board Option Switch 4-24
Power-Up Self-Test Mode 4-24
Microcomputer Test Mode 4-25
Instrument Bus Check Mode 4-26
Firmware Operating Notes 4-27

Section 5 THEORY OF OPERATION

Functional and General Description . . . 5-1
Detailed Description 5-3
1st Converter Circuits 5-3
RF Interface Circuits 5-3
RF Circuitry 5-4
2nd Converter 5-6
2072 MHz 2nd Converter 5-6
829 MHz 2nd Converter 5-9
110 MHz IF Amplifier and 3rd Converter 5-16
110 MHz IF Amplifier 5-16

Page

Section 5 THEORY OF OPERATION (cont)

110 MHz Bandpass Filter 5-18
3rd Converter 5-18
IF Section 5-19
Variable Resolution Section 5-19
Logarithmic Amplifier and Detector 5-25
Display Section 5-28
Functional and Block Description 5-28
Video Amplifier 5-29
Video Processor 5-31
Digital Storage 5-34
Deflection Amplifiers 5-40
Z-Axis Circuits 5-42
High Voltage Supply 5-42
Crt Readout 5-43
Frequency Control Section 5-50
Sweep Circuit 5-50
Span Attenuator 5-53
1st LO Driver 5-56
Preselector Driver 5-59
Sweep Shaper and Bias Circuits . 5-62
Center Frequency Control 5-62
Phase Lock System (Option 3) 5-67
Functional Description 5-67
Phaselock Control 5-68
Error Amplifier and Synthesizer . 5-70
Controlled Oscillator, Offset Mixer, and Strobe Driver 5-72
Digital Control 5-73
Processor 5-74
Memory Board 5-83
Front Panel 5-84
Accessories Interface Board 5-90
Main Power Supply and Fan Driver . 5-90
Main Power Supply 5-90
Fan Drive Circuit 5-94

APPENDIX A GLOSSARY

CHANGE INFORMATION

TABLE OF CONTENTS (cont)

VOLUME 2

SERVICING SAFETY SUMMARY

Section 6 REPLACEABLE ELECTRICAL PARTS

Section 7 DIAGRAMS

Section 8 REPLACEABLE MECHANICAL PARTS
- Digital Control
  - System Description
  - Processor
  - Memory Board
  - Front Panel
  - Accessories Interface Board
- Main Power Supply and Fan Driver
  - Main Power Supply
  - Fan Driver Board

LIST OF ILLUSTRATIONS

Fig. No.		Page
	The 492/492P Spectrum Analyzer	x
1-1	Dimensions	1-13
1-2	International power cord and plug configuration for the 492	1-19
3-1	Test equipment setup for checking frequency of the calibration and the accuracy of the frequency readout	3-7
3-2	Test equipment setup showing two methods that check calibrator output level	3-10
3-3	Test equipment setup for verifying attenuator and gain accuracy	3-11
3-4	Test equipment setup for checking the 0—10 MHz frequency response	3-16
3-5	Test equipment setup for measuring the .01—2.0 GHz frequency response	3-17
3-6	Typical display showing frequency response from a sweeping signal source	3-17
3-7	Test equipment setup for measuring 2.0—18.0 GHz frequency response	3-18
3-8	Test equipment setup for checking span and timing accuracy	3-21
3-9	Display to illustrate how timing accuracy is checked	3-22
3-10	Measuring resolution bandwidth and shape factor	3-23
3-11	Digital stored display showing drift	3-25
3-12	Measuring residual (incidental) FM	3-26
3-13	Test equipment setup for measuring intermodulation distortion	3-27
3-14	Intermodulation products	3-28
3-15	Test equipment setup to check harmonic distortion	3-28
3-16	Typical display of phase lock noise	3-29
3-17	Multiple exposure to illustrate how the differential between two signals can be measured	3-30
3-18	Test equipment setup for checking triggering requirements	3-30
3-19	Test equipment setup to check external triggering and horizontal input characteristics	3-32
3-20	Test oscilloscope display of a sinewa input signal to EXT TRIG connector (input 5 V peak at 1.0 V peak-to-peak)	3-32
3-21	Display of a full screen signal at the Vertical Output Connector	3-32
3-22	Low voltage power supply adjustments and test point locations	3-36
3-23	Adjustments and test points on the defelction amplifier, High Voltage module, and Z Axis/RF Interface board	3-37
3-24	Location of wire strap (W4036) on high voltage circuit board	3-37
3-25	Test equipment setup for calibrating the Deflection Amplifier	3-37
3-26	Location of TP1101 on Crt Readout	3-38
3-27	Test points and adjustments on the Deflection Amplifier board for gain and frequency response calibration	3-38
3-28	Test equipment setup for calibrating sweep timing	3-39
3-29	Location of timing adjustment R5105 and TP1061 on sweep board	3-40
3-30	Test equipment setup for calibrating sweep ramp for the 1st LO Driver	3-43
3-31	1st LO balance and span adjustments and test points	3-43
3-32	Test equipment setup for check and adjustment of 1st and 2nd LO frequency	3-48
3-33	Center Frequency Control adjustment locations	3-48
3-34	1st LO Driver adjustments and test point locations	3-49
3-35	Test equipment setup for adjusting baseline leveling	3-51
3-36	Adjustments and test points on the Video Processor board	3-52
3-37	Typical response displays when adjusting baseline leveling	3-53
3-38	Typical response displays when adjusting compensation of baseline leveling circuits	3-53
3-39	Equipment setup for calibrating log amplifier	3-54
3-40	Location of connectors and adjustments on the Log and Video Amplifier	3-55
3-41	Test equipment setup for calibrating the VR section	3-56
3-42	Response of the 100 kHz filter	3-57
3-43	Calibration adjustments on the VR #2 module	3-57
3-44	Calibration adjustments on VR #1 module	3-58
3-45	Typical response of 10 kHz, 100 kHz, and 1 MHz bandwidth filters	3-60
3-46	Test equipment setup for adjusting IF gain and the location of the calibrator level adjustment	3-61

LIST OF ILLUSTRATIONS (cont)

Fig. No.		Page
3-47	Digital Storage adjustment locations	3-62
3-48	Location of binary switch (S1014) for setting B–SAVE A reference level	3-64
3-49	Band leveling adjustments and gain diodes (when installed) on VR #2 module	3-64
3-50	Test equipment setup for calibrating band leveling of the external mixer bands	3-65
3-51	Test equipment setup for calibrating Preselector Driver	3-66
3-52	Preselector Driver adjustments and test points	3-67
3-53	Test equipment setup for calibrating Phase Lock assembly	3-69
3-54	Adjustments and test point locations in the Phase Lock module	3-70
4-1	Multipin (harmonica) connector configuration	4-3
4-2	Color code for some tantalum capacitors	4-4
4-3	Diode polarity markings	4-4
4-4	Electrode configuration for semiconductor components	4-5
4-5	Preparing the VR module for service showing how it is supported when on an extender	4-9
4-6	View of the 492 RF deck showing major assemblies and circuit boards	4-10
4-7	View of the 492 top deck showing major assemblies	4-11
4-8	Removing YIG oscillator interface circuit board	4-14
4-9	Exploded drawing of fan assembly	4-15
4-10	Test equipment setup for adjusting return loss for the 110 MHz IF assembly	4-16
4-11	Location of the 110 MHz IF return loss adjustments and IF Gain adjustment	4-17
4-12	LO section of 829 MHz converter showing test points and connectors	4-19
4-13	Location of test jack and jumper on the 829 MHz amplifier board	4-20
4-14	Test equipment setup for aligning the 829 MHz filter	4-21
4-15	Filter tune tabs in the 829 MHz converter	4-22
4-16	Typical response when the 1st and 2nd resonators of the 829 MHz filter are adjusted correctly	4-23
4-17	Typical response when the third and fourth resonators are tuned correctly	4-23
4-18	The Memory board option switch band S1033	4-24
4-19	A15 through A12 in microcomputer test mode	4-26
4-20	A15 and Y0 through Y2 of address decoder U2044	4-26
4-21	Enable and Y0 through Y2 of address decoder U1037B	4-26
4-22	A15 and Memory board address decoder outputs	4-27
4-23	Instrument bus check	4-28
5-1	Filter cross-section view	5-7
5-2	Filter equivalent circuit	5-8
5-3	2182.0 MHz Cavity LO equivalent circuits	5-9
5-4	Diplexer simplified schematic	5-10
5-5	Amplifier signal path	5-11
5-6	Amplifier signal path	5-12
5-7	Simplified block diagram of the phase lock circuits	5-13
5-8	Bridged T attenuator equivalent schematic	5-17
5-9	Three-stage log amplifier	5-26
5-10	Log amplifier gain curve showing breakpoint	5-27
5-11	Ends of logging range	5-27
5-12	Simplified detector circuit	5-28
5-13	Selection of display position on log scale	5-30
5-14	Video filter simplified schematic	5-33
5-15	Vertical control IC block diagram	5-36
5-16	Horizontal control IC block diagram	5-39
5-17	Simplified crt readout block diagram	5-43
5-18	Character on/off timing	5-44
5-19	Character scan	5-45
5-20	Character generator (U1028) block diagram	5-46
5-21	Character scan timing	5-47
5-22	Dot delay circuit timing	5-48
5-23	Frequency dot marker circuit and timing	5-49
5-24	Sweep "interrupt" circuits	5-53
5-25	Simplified digital-to-analog converter	5-55
5-26	Simplified span decade attenuator	5-56
5-27	DAC variance graph	5-63
5-28	Basic tune voltage converter	5-64

LIST OF ILLUSTRATIONS (cont)

Fig. No.		Page
5-29	Timing diagram for F ERROR count	5-70
5-30	Simple Logic diagram of processor clock	5-74
5-31	Block diagram of 6800 microprocessor	5-75
5-32	Read and write cycle timing on the microcomputer bus	5-77
5-33	Flow chart of the 6800 main decision paths	5-79
5-34	6821 PIA registers and control lines	5-80
5-35	A 6800 write to the instrument bus	5-83
5-36	Instrument bus POLL sequence	5-84
5-37	Scan by simplified keyboard encoder	5-85
5-38	Keyboard encoder	5-86
5-39	Switch matrix codes	5-88
5-40	Frequency control encoder timing	5-89
5-41	Primary regulator input and output waveforms (stylized)	5-92
5-42	Timing waveforms (stylized) for soft-start circuit	5-93

LIST OF TABLES

Table No.		Page
1-1	Sensitivity (Non-option instrument)	1-9
1-2	Sensitivity (Option 1)	1-16
1-3	Option 20 General Purpose Waveguide Mixers	1-18
1-4	Option 21 High Performance Waveguide Mixers	1-18
1-5	Option 22 High Performance Waveguide Mixers	1-19
2-1	Shipping Carton Strength	2-2
3-1	Equipment Required for Calibration	3-1
3-2	Harmonic Number (n) vs Frequency Range	3-7
3-2A	Correction Factor To Determine True Signal Level	3-12
3-3	Narrow and Wide Spans vs Frequency Band	3-20
3-4	Span/Div vs Time Markers	3-21
3-5	Sensitivity	3-24
3-6	Sensitivity (Option 1 492)	3-25
3-7	Adjustment Steps for Calibration	3-34
3-8	Power Supply Voltage Tolerances	3-35
3-9	Resolution and Sweep Rate as a Function of Span in Auto Mode	3-41
3-10	Ext Mixer Band Leveling Adjustments	3-65
4-1	Relative Susceptibility to Static Discharge Damage	4-1
5-1	RF Interface Lines	5-4
5-2	2nd Converter IF Selection	5-6
5-3	Switch and Amplifier Selection Summary	5-12
5-4	Bandwidth Selection	5-20
5-5	Gain Step Combinations	5-22
5-6	Progression of Gain Reduction	5-24
5-7	Filter Component Combinations	5-34
5-8	J2039 Truth Table	5-42
5-9	Control Port	5-48
5-10	Address/Data Port	5-48
5-11	Sweep Rate Selection Codes	5-52
5-12	Calibration Control Selection Codes	5-55
5-13	Attenuation Selection Codes	5-55
5-14	U4017 (U3027) Output Lines	5-57
5-15	U5031 Output Lines	5-60
5-16	Preselector Frequency Bands	5-61
5-17	ADDRESS 70 Formats	5-66
5-18	DAC Tuning Codes	5-66
5-19	U2025 Output Lines	5-71
5-20	Condition Codes	5-76
5-21	Address Select Lines	5-78
5-22	492 Microcomputer Address Space	5-78
5-23	PIA Register and Interface Select Codes	5-81
5-24	Instrument Bus Register Addresses	5-82
5-25	Parallel POLL Byte	5-83

SERVICING SAFETY SUMMARY

FOR QUALIFIED SERVICE PERSONNEL ONLY

Do Not Service Alone

Do not perform internal service or adjustment of this product unless another person capable of rendering first aid and resuscitation is present.

Use Care When Servicing With Power On

Dangerous voltages exist at several points in this product. To avoid personal injury, do not touch exposed connections and components while power is on.

Disconnect power before removing protective panels, soldering, or replacing components.

Power Source

This product is intended to operate from a power source that will not apply more than 250 volts rms between the supply conductors or between either supply conductor and ground. A protective ground connection by way of the grounding conductor in the power cord is essential for safe operation.

Grounding the Product

This product is grounded through the grounding conductor of the power cord. To avoid electrical shock, plug the power cord into a properly wired receptacle before connecting to the product input or output terminals. A protective ground connection by way of the grounding conductor in the power cord is essential for safe operation.

Danger Arising From Loss of Ground

Upon loss of the protective-ground connection, all accessible conductive parts (including knobs and controls that may appear to be insulating) can render an electric shock.

Use the Proper Power Cord

Use only the power cord and connector specified for your product.

Use only a power cord that is in good condition.

For detailed information on power cords and connectors, see the General Information and Specification section of this manual.

Refer cord and connector changes to qualified service personnel.

Use the Proper Fuse

To avoid fire hazard, use only the fuses specified in the parts list for your product which are identical in type, voltage, and current rating.

Refer fuse replacement to qualified service personnel.

Do Not Operate in Explosive Atmosphere

To avoid explosion, do not operate this product in an atmosphere of explosive gases.

TERMS

In This Manual

CAUTION statements identify conditions or practices that could result in damage to the equipment or other property.

WARNING statements identify conditions or practices that could result in personal injury or loss of life.

As Marked on Equipment

CAUTION indicates a personal injury hazard not immediately accessible as one reads the marking, or a hazard to property including the equipment itself.

DANGER indicates a personal injury hazard immediately accessible as one reads the marking.

SYMBOLS

In This Manual

⚠ This symbol indicates where applicable cautionary or other information is to be found.

As Marked on Equipment

⚡ DANGER — High voltage.

⏚ Protective ground (earth) terminal.

⚠ ATTENTION — refer to manual.

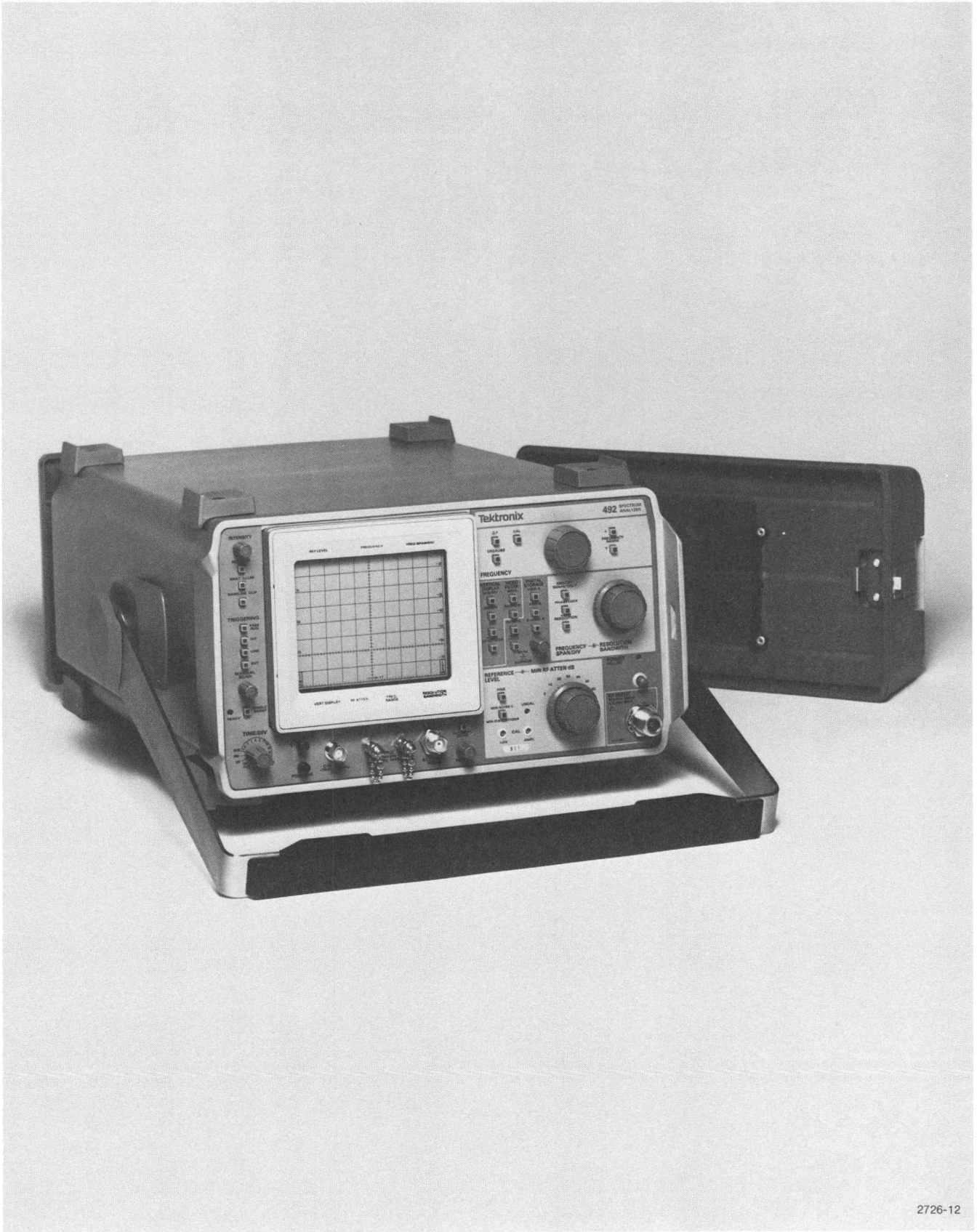

The 492 Spectrum Analyzer.

GENERAL INFORMATION AND SPECIFICATION

GENERAL INFORMATION

Introduction

The Service manual consists of two volumes that contain information necessary to test, adjust, and service the 492/492P Spectrum Analyzer. The intent is to provide as complete information as possible as an aid in servicing this instrument. The Table of Contents at the beginning of Volume 1 lists contents of each section contained within Volume 1.

Change information that involves manual corrections and/or additions pending manual reprint and bind, is located at the back of Volume 2 of the Service manual in the CHANGE INFORMATION section.

History information with the updated data is integrated into the text or diagrams when a page or diagram is updated. Original pages are identified by the symbol @, revised pages by a revision date in the lower inside corner of the page. The manual may contain revisions that do not apply to your instrument; however, history information with updated data, is integrated into the text or diagram when the page or diagram is revised.

The person using these instructions should be knowledgeable in digital and analog circuit theory. Circuit analysis is primarily functional. The intent is to provide sufficient information for the technician to isolate the majority of malfunctions to a block of circuitry. Those users with an understanding of logic and analog circuitry should then be able to further isolate the malfunction to a specific component or components.

Most terminology is in accordance with those standards adapted by IEEE. A glossary of terms is provided as an appendix. Abbreviations in the documentation are in accordance with ANSI Y1.1-1972, with exceptions and additions explained in parentheses after the abbreviation. Graphic symbols comply with ANSI Y32.2-1975. Logic symbology is based on ANSI Y32.14-1973 and the manufacturer's data description. A copy of ANSI standards may be obtained from the Institute of Electrical and Electronic Engineers, 345 47th Street, New York, NY 10017.

Product Service

To assure adequate product service and maintenance for our instruments, Tektronix has established Field Offices and Service Centers at strategic points throughout the United States and outside the United States in countries where our products are sold. Contact your local Service Center, representative, or sales engineer for details regarding: Warranty, Calibration, Emergency Repair, Repair Parts, Scheduled Maintenance, Maintenance Agreements, Pickup and Delivery, On-Site Service for fixed installations, and other services available through these centers.

Emergency Repair. This service provides immediate attention to instrument malfunction if you are in an emergency situation such as a field trip. Again, contact any Tektronix Service Center for assistance to get you on your way within a minimum of time.

Maintenance Agreements. Several types of maintenance or repair agreements are available. For example: for a fixed fee, a maintenance agreement program provides maintenance and re-calibration on a regular basis. Tektronix will remind you when a product is due for recalibration and perform the service within a specified time. Any Service Center can furnish complete information on costs and types of maintenance programs.

Instrument Construction

The modular construction of the 492 instrument provides ready access to the major circuits. Circuit boards that contain sensitive circuits are either mounted on metal extrusions, each of which provides shielding between adjacent modules, or they are mounted within honeycomb-like extrusions with a feedthrough connector through the wall of the compartment. Interconnection between boards and assemblies is provided by plugging these boards onto a main mother board. Most adjustments and test points are accessible while the instrument is operational and the modules or assemblies secured in their normal position. Extenders are provided with a Service Kit; see Maintenance section under Service Fixtures and Tools for Maintenance.

Any module can be removed without disturbing the structural or functional integrity of the other modules. The extenders allow most circuit board assemblies to function in an extended position for service or adjustment. The circuit boards mounted on the metal extrusion can be removed by removing the securing screws. All other circuit

boards (which should require minimal service) are accessible by removing a cover plate.

NOTE

Disassembly of some modules may require special tools and procedures. These procedures will be found in the Maintenance section.

In instruments that have phase lock, the phase lock assembly contributes to the 492 stability. Circuits are completely rf isolated to ensure spurious free response, yet the close proximity minimizes losses or interactions with other functions. All compartments are enclosed on both sides by metal plates and all interconnections between compartments are made by feedthrough terminals rather than cables. If the compartments are opened, be sure that the shields and covers are properly reinstalled before operating.

Elapsed Time Meter

A 5000 hour elapsed time indicator, graduated in 500 hour increments, is installed on the Z Axis/RF Interface circuit board. This provides a convenient way to check operating time. The meter on new instruments may indicate from 200 to 300 hours elapsed time. Most instruments go through a factory burn-in time to improve reliability. This is similar to using aged components to improve reliability and operating stability.

Changing Power Input Range

The following procedures describe how to set the input power range.

a. Disconnect the power plug and remove the cover.

b. Set the instrument on its face, and remove the four screws that hold the power supply module to the side rails. Lift the module off the instrument.

c. Remove the top and bottom screws, then the side screw that holds the two sections of the power supply module together. Separate the two sections to expose the power supply circuit board.

d. Shift plug P1029 (upper left corner) to the appropriate pins as indicated by the silk screen nomenclature.

e. Re-install the two sections and the power supply module.

f. Remove the input power specification plate over the input fuse on the back panel. Turn the plate over and re-install so the exposed information on power specifications is correct.

g. Change the input fuse to the new value specified on the information plate. (The fuse is part of the standard accessories.)

h. Replace the cover and the power cord; then connect the instrument to the appropriate power source.

NOTE

The power cord supplied with the instrument and instrument power voltage requirements depend on the available power source (see the Specification section for power cord options).

Replacing Fuses

Besides the input (back panel) fuse, the 492 power module has five fuses for the dc supplies (+300 V, F3014, +100 V, F1034, +17 V, F1014; +9 V, F1031, −7 V, F1011). Access to these fuses can be gained by removing the access plate at the upper left corner of the power module, or by separating the two sections as described for changing the input power range. Fuses are identified with stamped circuit numbers on the circuit board.

Selected Components

Some components, such as microcircuits, are selected to meet Tektronix specifications. These components are indicated in the parts list and carry a Tektronix Part Number under the Mfr. Part Number column.

Selected value components that compensate for parameter differences between active components are identified on the circuit diagram and in the parts list as a "SEL" value. The component description lists either the nominal value or a range of value. If the procedure for selection is not obvious, such as setting the gain or response of a stage, the criteria for selection is explained in the Calibration or Maintenance section of the manual. Where the selection procedure is obvious, such as establishing the frequency of an oscillator, no procedure is given.

Component Circuit Numbering Scheme

In this instrument, circuit numbers were assigned according to the components physical location on the board. For example, a component such as a resistor, located within row 2 column 08, is R2080. The fourth digit of the

number is an expander used to designate two or more common components within a given grid, such as R2080, R2082, etc.

Chassis mounted components are assigned a three digit number to help identify their location. Physical location will usually be shown on the back of the first pull-out diagram or along with the board illustration.

The Replaceable Electrical Parts list prefixes these circuit numbers with an assembly number. R2080, on assembly A20, becomes A20R2080. Assembly and sub-assembly numbers are assigned in numerical order by location within the instrument.

Firmware Version and Error Message Readout

This feature of the 492 provides readout of the firmware version when the power on/off is cycled. During initial power-up cycle, the firmware version flashes on screen for approximately two seconds. The Electrical Parts list section, under Memory Board (A54), lists the ROM's and their Tektronix part number for each firmware version.

An additional feature is error message readout. The following is a list of these messages and their meaning.

Error No.	Meaning
57	Tune routine failed in carry from lower DAC.
58	Failed to phase lock.
59	Lost lock.
60	Failed to recenter when phase lock cancelled or when going to an unlocked span.

SPECIFICATION

The following list of instrument characteristics and features apply to the basic 492 Spectrum Analyzer after a 30 minute warmup, except as noted. Changes to the basic specifications due to the addition of options follow the basic listings.

The Performance Requirement column describes the limits of the characteristic, and the Supplemental column describes features and typical values or information that may be useful to the user. Procedures to verify performance requirements are provided in the Calibration section of the Service instructions. The Performance Check procedures require sophisticated equipment as well as technical expertise to perform.

The Operators Manual contains a procedure that checks all functions of the 492. This check is recommended for incoming inspections to verify that the instrument is performing properly.

ELECTRICAL CHARACTERISTICS

FREQUENCY RELATED

Characteristic	Performance Requirement	Supplemental Information
Center Frequency		
Range (Internal Mixer)	100 kHz to 18 GHz.	Usable to 50 kHz and 21 GHz with reduced performance.
Accuracy (after 2 hour warmup)	±(5 MHz + 20% of span/div) or ±(0.2% of the center frequency + 20% of the span/div) whichever is greater.	

ELECTRICAL CHARACTERISTICS (cont)

FREQUENCY RELATED (cont)

Characteristic	Performance Requirement	Supplemental Information
TUNE command accuracy (492P only under remote control) after a 2 hour warmup. 1st LO Tuning Band Freq Span/Div 1-3 >50 kHz 4 >100 kHz 5-11 >200 kHz	(±7% of tune amount, or ±150 kHz) *n whichever is greater. See listing of IF frequency, LO range, and harmonic number in this section.)	
2nd LO Tuning 1-3 ≤50 kHz 4 ≤100 kHz 5-11 ≤200 kHz	(±7% of tune amount)	
Repeatability accuracy (return to a previous frequency setting) with an ambient temperature change ≤10°C. (492P only under remote control).		±(2 MHz +10% of Span/Div) or ±(0.1% of frequency +10% of Span/Div) whichever is greater
Readout Resolution		Within 1 MHz.
Residual FM (short term) after 2 hour warmup	≤(1 kHz peak-to-peak) n for a period of 20 ms. n is the 1st LO harmonic number used in the 1st mixer conversion, and related to the selected frequency range (band).	No video filter.
Frequency Drift after 2 hour warm-up at a fixed frequency	≤200 kHz/hour	A re-stabilization time of 10 minutes per GHz of frequency change must be allowed if the center frequency is retuned.
"Static" Resolution Bandwidth (6 dB down)	1 kHz to 1 MHz in decade steps, plus an automatic (AUTO position). Resolution bandwidth (6 dB down) is within 20% of the bandwidth selected.	In AUTO position the bandwidth is computed by an internal computer, based on the span/div, video filters, time/div, and vertical display selections. When both the TIME/DIV and RESOLUTION BANDWIDTH are in AUTO position, the resolution bandwidth is a function of the FREQUENCY SPAN/DIV selection.
Shape Factor (60 dB/6 dB)	7.5:1 or less.	
Noise Sidebands	At least 75 dBc at 30 times the resolution offset (70 dBc for 1 kHz resolution bandwidth) for fundamental mixing.	

ELECTRICAL CHARACTERISTICS (cont)

FREQUENCY RELATED (cont)

Characteristic	Performance Requirement	Supplemental Information		
Video Filter				
Narrow		Reduces video bandwidth to approximately 1/300th of the selected resolution bandwidth.		
Wide		Reduces video bandwidth to approximately 1/30th of the selected resolution bandwidth.		
Frequency Span/Div				
Range (in 1-2-5 sequence)		**Band**	**Narrow Span**	**Wide Span**
		1—3 (0—7.1 GHz)	10 kHz/Div	200 MHz/Div
		4—5 (5.4—21 GHz)	50 kHz/Div	500 MHz/Div
		6 (18—26 GHz)	50 kHz/Div	1 GHz/Div
		7—8 (26—60 GHz)	100 kHz/Div	2 GHz/Div
		9 (60—90 GHz)	200 kHz/Div	2 GHz/Div
		10 (90—140 GHz)	500 kHz/Div	5 GHz/Div
		11 (140—220 GHz)	500 kHz/Div	10 GHz/Div
		Two additional positions provide full band (MAX span) display or 0 Hz (time domain) display.		

ELECTRICAL CHARACTERISTICS (cont)

FREQUENCY RELATED (cont)

Characteristic	Performance Requirement		Supplemental Information
Accuracy	Within 5% of the span/div selected over the center eight divisions of a ten-division display.		
Frequency Response and Display Flatness			Frequency response is measured with RF attenuation ⩾10 dB and PEAKING optimized for each center frequency setting, when applicable. Response includes the effects of input vswr, mixing mode (n), gain variation, pre-selector, and mixer. Display flatness is typically 1 dB greater than the frequency response.
Coaxial (direct) Input	About mean average	Referenced to 100 MHz	
Band 1			
100 kHz — 4.2 GHz	±1.5 dB		
50 kHz — 4.2 GHz	±2.5 dB		
Band 2			
1.7 — 5.5 GHz	±1.5 dB	±2.5 dB	
Band 3			
3.0 — 7.1 GHz	±1.5 dB	±2.5 dB	
Band 4			
5.4 — 18.0 GHz	±2.5 dB	±3.5 dB	
Band 5			
15.0 — 21.0 GHz	±3.5 dB		
External High Performance Waveguide Mixers			TEKTRONIX High Performance Waveguide Mixers.
Band 6			
18.0 — 26 GHz	±3.0 dB		
Band 7			
26 — 40.0 GHz	±3.0 dB		
Band 8			
40 — 60 GHz	±3.0 dB		
Band 9			
60 — 90 GHz			Dependent on external mixer
Band 10			
90 — 140 GHz			Dependent on external mixer
Band 11			
140 — 220 GHz			Dependent on external mixer
IF Frequency, LO Range and Harmonic Number (n)			
Band and Freq Range			LO Range (MHz) and Harmonic (n) / 1st IF (MHz)
1 (0 — 4.2 GHz)			2072 — 6272 (1−) / 2072
2 (1.7 — 5.5 GHz)			2529 — 6329 (1−) / 829
3 (3.0 — 7.1 GHz)			2171 — 6271 (1+) / 829
4 (5.4 — 18.0 GHz)			2072 — 6276 (3−) / 829

ELECTRICAL CHARACTERISTICS (cont)

FREQUENCY RELATED (cont)

Characteristic	Performance Requirement	Supplemental Information	
5 (15 — 21 GHz)		4309 — 6309 (3+)	2072
6 (18 — 26 GHz)		2655 — 3988 (6+)	2072
7 (26 — 40 GHz)		2443 — 3793 (10+)	2072
8 (40 — 60 GHz)		3792 — 5790 (10+)	2072
9 (60 — 90 GHz)		3861 — 5862 (15+)	2072
10 (90 — 140 GHz)		3823 — 5997 (23+)	2072
11 (140 — 220 GHz)		3728 — 5890 (37+)	2072

AMPLITUDE RELATED

Characteristic	Performance Requirement	Supplemental Information
Display Modes		10 dB/Div, 2 dB/Div, Linear, and Delta A.
Display Reference Level		
Range		−123 dBm to +40 dBm (+40 dBm includes 10 dB of IF gain reduction, +30 dBm is the maximum safe input) for 10 dB/DIV and 2 dB/DIV log modes. 20 nV/Div to 2 V/Div (1 W maximum safe input) in linear mode.
Steps		10 dB, 1 dB, and 0.25 dB for relative (Δ) measurements in log mode. 1-2-5 sequence and 1 dB equivalent increments in LIN mode.
Accuracy		Accuracy is a function of the RF attenuation and reference level settings, resolution switching, frequency response, frequency band, and display mode. (See amplitude accuracies of these functions.) The attenuator is changed for reference levels above −30 dBm (−20 dBm in minimum noise) unless a MIN RF ATTEN setting greater than the nominal attenuation is specified.
Display Dynamic Range		80 dB at 10 dB/Div and 16 dB at 2 dB/Div. for log mode plus 8 divisions for linear mode.
Accuracy	±1.0 dB/10 dB to maximum cumulative error of ±2.0 dB over the 80 dB window and ±0.4 dB/2 dB to a maximum cumulative error of ±1.0 dB over the 16 dB window. LIN mode is ±5% of full screen.	

ELECTRICAL CHARACTERISTICS (cont)

AMPLITUDE RELATED (cont)

Characteristic	Performance Requirement	Supplemental Information
RF Attenuator		
Range		0 to 60 dB in 10 dB steps.
Accuracy		
Dc to 4 GHz	Within 0.3 dB/10 dB to a maximum of 0.7 dB over the 60 dB range.	
4 GHz to 18 GHz	Within 0.5 dB/10 dB to a maximum of 1.4 dB over the 60 dB range.	
IF Gain		
Range		83 dB of gain increase, 10 dB of gain decrease (MIN NOISE activated) in 10 dB and 1 dB steps.
Accuracy	Within 0.2 dB/1 dB except at the 10 dB reference level transition from −29 to −30 dBm, −39 to −40 dBm, −49 to −50 dBm, −59 to −60 dBm, and −69 to −70 dBm, where the accuracy is 0.5 dB; and within 0.5 dB/10 dB to a maximum of ±2 dB over the 90 dB range.	
Differential Amplitude		Delta A mode.
Measurement		
Accuracy		Within the reference level range of −123 dBm to +30 dBm.

dB Difference	Steps	Error
0.25 dB	1	0.05 dB
2 dB	8	0.4 dB
10 dB	40	1.0 dB
50 dB	200	2.0 dB

Range	From 10 dB above to 40 dB below the reference level established when the Delta A mode was activated.	Do not use Delta mode outside the −123 dBm to +30 dBm reference level range. Total range is at least 50 dB.
Signal Amplitude Variation With Resolution Switching	Less than 0.5 dB.	

Sensitivity

The following tabulation shows the equivalent maximum input noise for each resolution bandwidth, with the internal mixer for frequency bands 1—5 (100 kHz—18 GHz), and TEKTRONIX High Performance Waveguide Mixers for bands 6—10 (18 GHz—140 GHz). The NARROW video filter is activated, for narrow resolutions (1 kHz or less); WIDE filter for wide resolution.

Table 1-1

SENSITIVITY (NON-OPTION INSTRUMENT)

Frequency/Band	Equivalent Input Noise for Resolution Bandwidths			
	1 kHz	10 kHz	100 kHz	1 MHz
50 kHz—7.1 GHz (Bands 1—3)	−115 dBm	−105 dBm	−95 dBm	−85 dBm
5.4—18.0 GHz (Bands 4 and 5)	−100 dBm	−90 dBm	−80 dBm	−70 dBm
15—21.0 GHz	−95 dBm	−85 dBm	−75 dBm	−65 dBm
18.0—26 GHz (Band 6)[a]	−100 dBm	−90 dBm	−80 dBm	−70 dBm
26—40.0 GHz (Band 7)[a]	−95 dBm	−85 dBm	−55 dBm	−65 dBm
40.0—60.0 GHz (Band 8)[a]	−95 dBm	−85 dBm	−75 dBm	−65 dBm
60.0—90.0 GHz (Band 9)	External Mixer Dependent			
90.0—150.0 GHz (Band 10)	External Mixer Dependent			
140.0—220 GHz (Band 11)	External Mixer Dependent			

[a]TEKTRONIX High Performance Waveguide Mixers.

ELECTRICAL CHARACTERISTICS (cont)

AMPLITUDE RELATED (cont)

Characteristic	Performance Requirement	Supplemental Information
Spurious Response		
Residual (no input signal, referenced to mixer input, and fundamental mixing for bands 1, 2, and 3)	−100 dBm or less.	
Third order intermodulation products (MIN DISTORTION mode)	At least −70 dBc below any two on screen signals within any frequency span.	
Harmonic Distortion (cw signal, MIN DISTORTION mode)	At least −60 dBc for full screen signal.	
LO Emissions (referenced to input mixer)	−10 dBm or less.	

INPUT SIGNAL CHARACTERISTICS

Characteristic	Performance Requirement	Supplemental Information
RF INPUT		Type N female connector, specified to 18 GHz, usable to 21 GHz.
Input Impedance		50 ohm; vswr 1:45 maximum with 10 dB or more RF attenuation to 18 GHz and 3.5 to 21 GHz.

ELECTRICAL CHARACTERISTICS (cont)

INPUT SIGNAL CHARACTERISTICS (cont)

Characteristic	Performance Requirement	Supplemental Information
Input Level		
Optimum level for linear operation	−30 dBm referenced to input mixer.	This is achieved by being in MIN DISTORTION and not exceeding full screen.
1 dB compression point	−18 dBm, no RF attenuation.	
Maximum input level		
RF Attenuation at 0 dB	+13 dBm (Input mixer limit).	
With 20 dB or more RF Attenuation	+30 dBm (1 W) continuous, 75 W peak, pulse width 1 μs or less with a maximum duty factor of 0.001 (attenuation limit).	**Do Not apply dc voltage to the RF INPUT.**
External Mixer		Input for IF signal and the source of negative-going bias for external waveguide mixers. Bias range +1.0 to −2.0 V.
EXT IN HORIZ/TRIG		Dc coupled input for horizontal drive and ac coupled for trigger signal.
Input Voltage Range		
Sweep		0 to +10 V (dc + peak ac) for full screen deflection.
Trigger	0.5 V peak. Frequency 15 Hz to 1 MHz.	Must be terminated in 1 kΩ or less. Maximum input 50 V peak, pulse width 0.1 μs minimum.
ACCESSORY (J104)		This connector is for future applications.

OUTPUT SIGNAL CHARACTERISTICS

Characteristic	Performance Requirement	Supplemental Information
Calibrator (CAL OUT)	−20 dBm ±0.3 dB at 100 MHz ±0.01%.	100 MHz comb markers are provided for frequency and span calibration.
1st LO and 2nd LO		Provides access to the output of the respective local oscillators (1st LO +7.5 dBm minimum, 2nd LO −22 dBm minimum). These ports must be terminated in 50 Ω at all times.
Vertical	Provides 0.5 V ±5% of signal per division of video above and below the centerline.	Source impedance approximately 1 kΩ.
Horiz Out	Provides 0.5 V/Div either side of center. Full range −2.5 V to +2.5 V ±10%.	Source impedance approximately 1 kΩ.
Pen Lift		TTL compatible, nominal +5 volts to lift pen.

ELECTRICAL CHARACTERISTICS (cont)

OUTPUT SIGNAL CHARACTERISTICS (cont)

Characteristic	Performance Requirement	Supplemental Information
IF Out		Access to the 10 MHz IF. Output level is approximately −15 dBm for a full screen signal at −30 dBm reference level. Nominal impedance approximately 50 Ω.

GENERAL CHARACTERISTICS

Characteristic	Performance Requirement	Supplemental Information
Sweep		Triggered, auto, manual, and external.
Sweep Time	20 μs/Div to 5 s/Div in 1-2-5 sequence (10 s/Div in Auto).	
Accuracy	±5%.	
Triggering	⩾2.0 division of signal for internal, and 0.5 V peak minimum for external.	Internal, external, free run, and single sweep. Internal is ac coupled (15 Hz to 1 MHz).
Crt Readout		Displays: Reference level, frequency, vertical display mode, frequency span/div, frequency range, resolution bandwidth, and RF attenuation.

POWER REQUIREMENTS

Characteristic	Description
Input Voltage	90 to 132 Vac or 180 to 250 Vac, 48 to 440 Hz.
Power	
Power (Options 1, 2, 3)	At 115 V, 60 Hz; 210 watts maximum, 3.2 amperes.
Leakage Current	5 mA peak.

NOTE

If power to this instrument is interrupted, it may be necessary to re-initialize the microcomputer; when power is restored, turn the POWER switch Off for 5 seconds then back On.

ENVIRONMENTAL CHARACTERISTICS

Meets MIL T-28800B, type III class 3, style C specifications, comprised of the following:

Characteristic	Description
Temperature	
Operating and humidity	−15°C to +55°C/95% (+5%, −0%) relative humidity.
Non-operating	−62°C to +75°C.

NOTE

After storage at temperatures below the operating range, the microcomputer may not initialize on power-up. If so, allow the instrument to warm up for 15 minutes and re-initialize the microcomputer by turning the POWER Off for 5 seconds then back On.

Altitude		
Operating	15,000 feet.	
Non-operating	40,000 feet.	
Humidity (Non-operating)	Five cycles (120 hours) of MIL-Std-810.	
Vibration	Method 507 Procedure 4 (modified).	
Operating	Resonant searches along all three axes at 0.025 inch, frequency varied from 10—55 Hz, 15 minutes. All major resonances must be minimum per axis plus dwell at resonant frequency or 55 Hz for 10 minutes minimum per axis. Instrument secured to vibration platform during test. Total vibration time about 75 minutes.	
Shock (Operating and Non-operating)	Three shocks of 30 g, one-half sine, 11 ms duration, each direction along each major axis. Guillotine-type shocks. Total of 18 shocks.	
Transit drop (free fall)	12 inch, one per each of six faces and eight corners.	
Electromagnetic Interference (EMI)	Within limits described in MIL-Std-461.	
	Test Method	**Remarks**
Conducted emissions	CE01	10 kHz to 20 kHz only.
	CE03 20 kHz to 50 MHz power leads.	Except 30 kHz to 35 kHz, relaxed by 15 dB.
Conducted susceptibility	CS01 30 Hz to 50 kHz power leads.	Full limits.
	CS02 50 kHz to 400 kHz power leads.	Full limits.
	CS06 spike power leads.	Full limit.
Radiated emissions	RE01 30 Hz to 30 kHz magnetic field	Relaxed by 10 dB for fundamental, 2nd, and 3rd harmonic of power line.
	RE02 14±3kHz to 10 GHz.	
Radiated susceptibility	RS01 30 Hz to 30 kHz magnetic field.	Full limit.
	RS03 up to 10 GHz.	Full limit.

PHYSICAL CHARACTERISTICS

Characteristics	Description
Weight (standard accessories and cover except manuals)	44 pounds (21.78 kg) maximum.
Dimensions (Fig. 1-1)	
Without front cover and handle or feet	6.9 X 12.87 X 19.65 inches (17.5 X 32.69 X 49.91 centimeters).
With front cover, feet and handle	9.15 X 15.05 X 23.1 inches (handle folded back over instrument), 28.85 inches (handle fully extended).

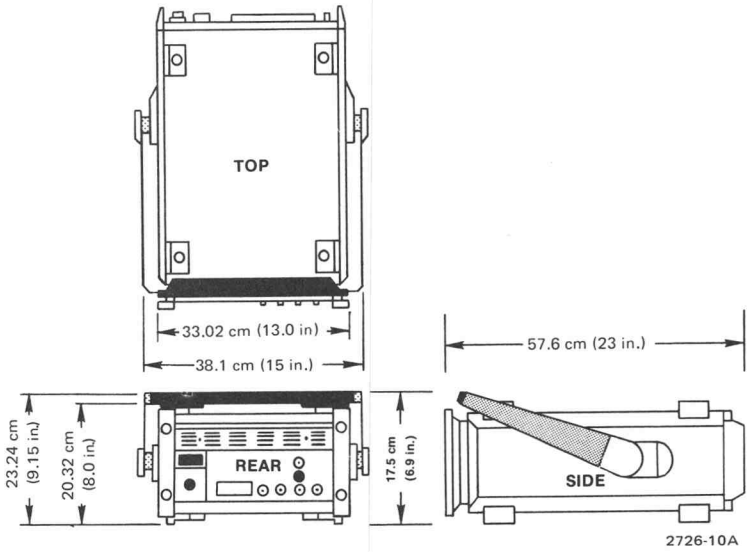

Fig. 1-1. 492 Dimensions.

ACCESSORIES

See Accessories page following Replaceable Mechanical Parts list, Volume 2.

OPTIONS

Options available for the 492 and their resultant changes to the specifications are listed below. Options are factory installed at the time of the initial order. Contact your local Tektronix Field Office for additional information.

OPTION 1

This option provides calibrated preselection to the first (1st) mixer for the 1.7 to 18 GHz frequency range and limiter protection below 1.8 GHz. Band 1 becomes 100 kHz to 1.8 GHz using an input low-pass filter; the preselector starts at Band 2 (1.7 GHz).

The following changes and additions in electrical characteristics apply:

ELECTRICAL CHARACTERISTICS

Characteristic	Performance Requirement	Supplemental Information
Spurious Responses		
Intermodulation Products		
1.8—18 GHz	At least −70 dBc from any two on-screen signals within any frequency span.	⩾−100 dBc when signals are separated 100 MHz or more.
1.7—1.8 GHz	At least −70 dBc from any two −40 dBm signals within any frequency span.	
Harmonic Distortion (cw signal 1.7—18 GHz)	−100 dBc or more for full screen signal (MIN DISTORTION mode).	
LO emission, referenced to input mixer and with zero RF attenuation	Less then −70 dBm to 18 GHz.	
Input Level		
Maximum Safe Input with zero RF attenuation		1 watt or +30 dBm.
1 dB Compression Point (minimum):		
1.7—2.0 GHz	−28 dBm.	
Otherwise	−10 dBm.	

ELECTRICAL CHARACTERISTICS (cont)

Characteristic	Performance Requirement		Supplemental Information
Frequency Response and Display Flatness			Frequency response is measured with RF attenuation ≥10 dB and PEAKING optimized for each center frequency setting, when applicable. Response includes the effects of input vswr, mixing mode (n), gain variation, preselector, and mixer. Display flatness is typically 1 dB greater than the frequency response.
Coaxial (direct) Input	About mean average	Referenced to 100 MHz	
Band 1 100 kHz — 1.8 GHz	±1.5 dB		
50 kHz — 1.8 GHz	±2.5 dB		
Band 2 1.7 — 5.5 GHz	±2.5 dB	±3.5 dB	
Band 3 3.0 — 7.1 GHz	±2.5 dB	±3.5 dB	
Band 4 5.4 — 18.0 GHz	±3.5 dB	±4.5 dB	
Band 5 15.0 — 21.0 GHz	±5.0 dB		
External High Performance Waveguide Mixers			TEKTRONIX High Performance Waveguide Mixers.
Band 6 18.0 — 26 GHz	±3.0 dB	±6.0 dB	
Band 7 26 — 40.0 GHz	±3.0 dB	±6.0 dB	
Band 8 40 — 60 GHz	±3.0 dB	±6.0 dB	
Band 9 60 — 90 GHz			Dependent on external mixer.
Band 10 90 — 140 GHz			Dependent on external mixer.
Band 11 140 — 220 GHz			Dependent on external mixer.

Sensitivity

The following tabulation shows the equivalent maximum input noise for each resolution bandwidth, with the internal mixer for frequency bands 1—5 (100 kHz—18 GHz), and TEKTRONIX High Performance Waveguide Mixers for bands 6—10 (18 GHz—140 GHz). The NARROW video filter is activated, for narrow resolutions (1 kHz or less); WIDE filter for wide resolution.

Table 1-2

OPTION 1 SENSITIVITY

Frequency/Band	Equivalent Input Noise for Resolution Bandwidths			
	1 kHz	10 kHz	100 kHz	1 MHz
100 kHz—7.1 GHz (Bands 1—3)	−110 dBm	−100 dBm	−90 dBm	−80 dBm
5.4—12.0 GHz (Band 4)	−95 dBm	−85 dBm	−75 dBm	−65 dBm
12.0—18.0 GHz (Band 4)	−90 dBm	−80 dBm	−70 dBm	−60 dBm
15.0—21.0 GHz (Band 5)	−85 dBm	–	–	–
18.0—26.5 GHz (Band 6)[a]	−100 dBm	−90 dBm	−80 dBm	−70 dBm
26.5—40.0 GHz (Band 7)[a]	−95 dBm	−85 dBm	−75 dBm	−65 dBm
40.0—60.0 GHz (Band 8)[a]	−95 dBm	−85 dBm	−75 dBm	−65 dBm
60.0—90.0 GHz (Band 9)	External Mixer Dependent			
90.0—140 GHz (Band 10)	External Mixer Dependent			
140—220 GHz (Band 11)	External Mixer Dependent			

[a]TEKTRONIX High Performance Waveguide Mixers.

OPTION 2

This option provides digital storage. The following are the changes and additions to the instrument:

Multiple memory (A & B) display storage is provided with: Save A, Max Hold, B memory minus Save A memory, digital display averaging, and storage bypass for non-store display.

When digital storage is used, an additional quantization error of 0.5% of full screen must be added to the measured amplitude characteristics (i.e., frequency response, sensitivity, etc.).

OPTION 3

This option provides first (1st) local oscillator stabilization by phase locking to an internal reference to reduce residual FM when narrow bands are selected. The microcomputer automatically selects phase lock for a span/division of 50 kHz or less in Bands 1 through 3, 100 kHz or less in Band 4, and 200 kHz or less in Bands 5 and above. This option also adds a 100 Hz resolution filter. The following electrical characteristics have been changed:

ELECTRICAL CHARACTERISTICS

Characteristic	Performance Requirement	Supplemental Information		
Frequency Span/Div Range		Band	Narrow Span	Wide Span
		1—3 (0—7.1 GHz)	500 Hz/Div	200 MHz/Div
		4—5 (5.4—21 GHz)	500 Hz/Div	500 MHz/Div
		6 (18—26 GHz)	500 Hz/Div	1 GHz/Div
		7—8 (26—60 GHz)	500 Hz/Div	2 GHz/Div
		9 (60—90 GHz)	500 Hz/Div	2 GHz/Div
		10 (90—140 GHz)	500 Hz/Div	5 GHz/Div
		11 (140—220 GHz)	500 Hz/Div	10 GHz/Div
		Two additional positions provide full band display (MAX span) or 0 Hz (time domain display.		
Accuracy	Within 5% of the span/div selected over the center eight divisions of a ten division display.			
Resolution	Additional resolution bandwidth of 100 Hz with 7.5:1 shape factor.			
Residual FM (short term) after 2 hour warmup	≤(50 Hz peak-to-peak) n, for a period of 20 ms. n is the 1st LO harmonic number used in the 1st mixer conversion, and related to the selected frequency range (band).	No video filter.		
Frequency Drift	25 kHz/hour, fundamental mixing, after 2 hour warmup.	A restabilization period of 10 minutes per GHz of frequency change must be allowed if the center frequency is returned.		
Sensitivity (100 Hz)	8 dB better than 1 kHz sensitivity.			

OPTION 8

Deletes External Mixer capability. Standard accessories do not include the Diplexer. Frequency range of the instrument is 50 kHz to 21 GHz.

OPTION 20

Includes: General Purpose Waveguide Mixers; 12.5 to 40 GHz as listed in Table 1-3. Tektronix Part No. 016-0640-00.

Table 1-3

Frequency Range	Part Number	Sensitivity: Equivalent Input Noise @ 1 kHz Bandwidth (Typical)
12.4—18 GHz	119-0097-00	−75 dBm
18.0—26.5 GHz	119-0098-00	−70 dBm
25.6—40 GHz	112-0099-00	−60 dBm

Cable: TNC to SMA male connectors, 012-0748-00

Storage Case: 004-1651-00

OPTION 21

Includes: High Performance Waveguide Mixers; 18 to 40 GHz as listed in Table 1-4. Tektronix Part No. 016-0662-00.

Table 1-4

Frequency Range	Part No.	Sensitivity: Equivalent Input Noise @ 1 kHz Bandwidth (Maximum)	Frequency Response	Referenced to 100 MHz
18.0—26.5 GHz	WM490K	−100 dBm	±3.0 dB	±6 dB
26.5—40 GHz	WM490A	−95 dBm	±3.0 dB	±6 dB

Cable: SMA to SMA connector, 012-0649-00

Storage Case: 004-1651-00

OPTION 22

Includes: High Performance Waveguide Mixers: 18 to 60 GHz as listed in Table 1-5. Tektronix Part No. 016-0657-00.

Table 1-5

Frequency Range	Part No.	Sensitivity: Equivalent Input Noise @ 1 kHz Bandwidth (Maximum)	Frequency Response	Referenced to 100 MHz
18.0—26.5 GHz	WM490K	−100 dBm	±3.0 dB	±6 dB
26.5—40 GHz	WM490A	−95 dBm	±3.0 dB	±6 dB
40—60 GHz	WM490U	−95 dBm	±3.0 dB	±6 dB

Cable: SMA to SMA male connector, 012-0649-00

Storage Case: 004-1651-00

NOTE

These characteristics assume that the waveguide mixer is connected to a cw signal source and that the PEAKING control is adjusted for maximum signal amplitude. The signal must be stable (not frequency modulated more than the resolution bandwidth); otherwise, frequency response specifications cannot be met.

OPTIONS FOR POWER CORD CONFIGURATION

Tektronix has implemented options that provide international approval power cord and plug configurations. These are shown and illustrated in Fig. 1-2.

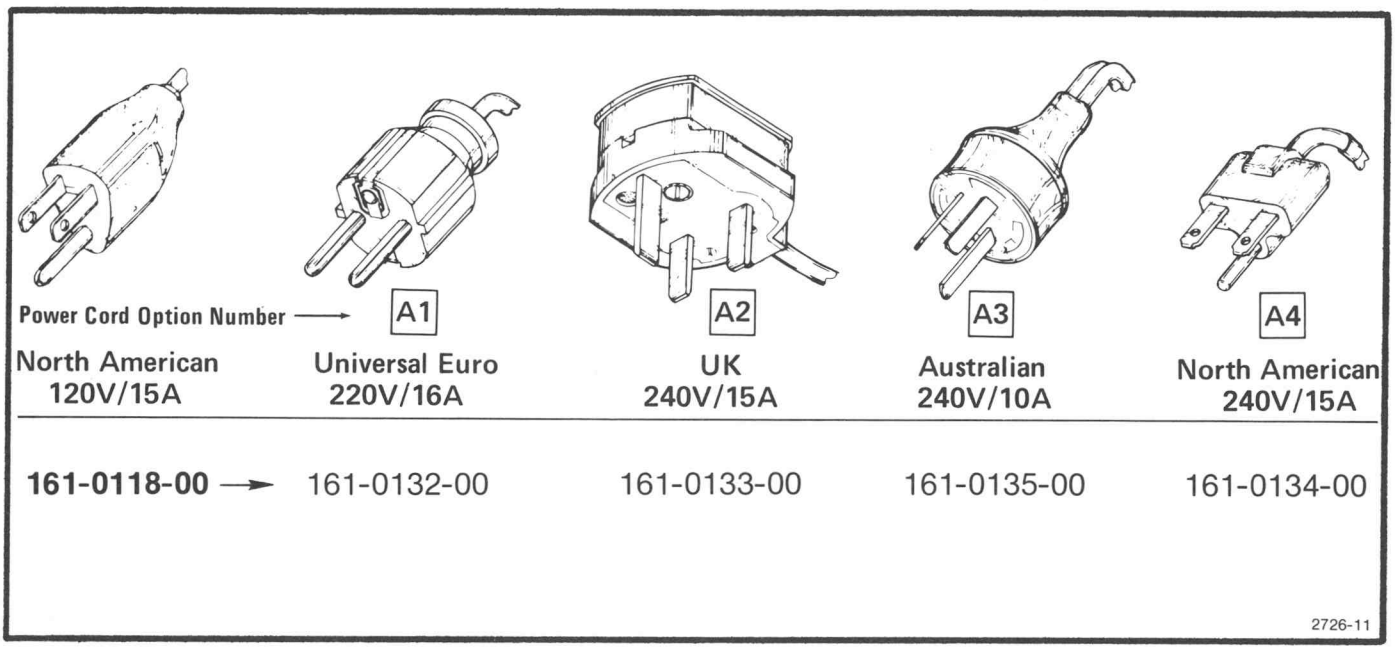

Fig. 1-2. International power cord and plug configuration for the 492.

INSTALLATION AND REPACKAGING

Introduction

This section describes unpacking, installation, power requirements, and repackaging information for the 492 Spectrum Analyzer.

Unpacking and Initial Inspection

Before unpacking the 492 from its shipping container or carton, inspect for signs of external damage. If the carton is damaged, notify the carrier as well as Tektronix, Inc. The shipping carton contains the basic instrument and its standard accessories. Optional accessories are shipped in separate containers. Refer to the Accessories listing in the Specification section in the 492 Service Volume 2 manual for a complete listing.

If the contents of the shipping container are incomplete, if there is mechanical damage or defect, or if the instrument does not meet operational check requirements, contact your local Tektronix Field Office or representative.

The instrument was inspected both mechanically and electrically before shipment. It should be free of mechanical damage and meet or exceed all electrical specifications. Procedures to check functional or operational performance are in the Operation section. The functional check procedure verifies proper instrument operation. This check should satisfy the requirements for most receiving or incoming inspections. The electrical performance check procedure is part of the Service instructions.

Preparation for Use

The 492 can be installed in any position that allows air flow in the bottom and out the rear of the instrument. Feet on the four corners allow ample clearance even if the instrument is stacked with other instruments. A fan draws air in through the bottom and expels air out the back. Avoid locating the 492 where paper, plastic, or like material might block the air intake.

The front panel cover for the 492 provides a dust-tight seal. Use the cover to protect the front panel when storing or transporting the instrument. The cover is also used to store accessories and external waveguide mixers. The cover is removed by first pulling up and in on the two release latches then pulling up on the cover. The accessories door is unlatched by pressing the latch to the side and lifting the cover.

The handle of the 492 can be positioned at several angles to serve as a tilt stand, or it can be positioned at the top rear of the instrument between the feet and the rear panel so that 492 instruments can be stacked. To position the handle, press in at both pivot points and rotate the handle to the desired position.

CAUTION

Removing or replacing the cabinet on the instrument can be hazardous. The cabinet should only be removed by qualified service personnel. See Removing the Cabinet at the beginning of the Calibration Procedure section.

Power Source and Power Requirements

The 492 is designed to operate from a single-phase power source that has one of its current-carrying conductors (neutral) at ground (earth) potential. Operating from power sources where both current-carrying conductors are isolated or above ground potential (such as phase-to-phase on a multi-phase system or across the legs of a 110—220 volt single-phase, three-wire system) is not recommended, since only the line conductor has over-current (fuse) protection within the unit. Refer to the Safety Summary at the front of this manual.

The ac power connector is a three-wire polarized plug with the ground (earth) lead connected directly to the instrument frame to provide electrical shock protection. If the unit is connected to any other power source, the unit frame must be connected to an earth ground.

Power and voltage requirements are printed on a back panel plate mounted below the power input jack. The 492 can be operated from either 115 Vac or 230 Vac nominal line voltage with a range of 90 to 132 or 180 to 250 Vac, at 48 to 440 Hz. A multipin (harmonica) type connector on the power supply etched circuit board can be positioned to accommodate either voltage range. When the power supply circuitry is changed to accommodate a different power source, the information plate on the back panel must also be changed to reflect the new power requirements. Refer to Maintenance section for procedure.

Repackaging for Shipment

When the 492 is to be shipped to a Tektronix Service Center for service or repair, attach a tag showing: owner and address, name of individual at your firm that can be contacted, complete serial number, and a description of the service required. If the original packaging is unfit for use or not available, repackage the equipment as follows:

1. Obtain a carton of corrugated cardboard having inside dimensions that are at least six inches more than the equipment dimensions, to allow for cushioning. Table 2-1 lists instrument weights and carton strength requirements.

2. Install the front cover on the 492 and surround the equipment with polyethylene sheeting to protect the finish.

3. Cushion the equipment on all sides with packing material or urethane foam between the carton and the sides of the equipment.

4. Seal with shipping tape or industrial stapler.

Table 2-1

SHIPPING CARTON TEST STRENGTH

Gross Weight		Carton Test Strength	
Pounds	Kilograms	Pounds	Kilograms
0—10	0—3.73	200	74.6
10—30	3.73—11.19	275	102.5
30—120[a]	11.9—44.76	375	140.0
120—140	44.76—52.22	500	186.5
140—160	52.22—59.68	600	223.8

[a]Applicable to the 492.

If you have any questions, contact your local Tektronix Field Office or representative.

CALIBRATION

INTRODUCTION

Calibration consists of a Performance Check and an Adjustment Procedure. The Performance Check describes procedures to verify that the instrument is performing properly and meets specifications listed in Section 1. All tests can be performed without access to the interior of the instrument. The Adjustment part provides instructional steps required to recalibrate the instrument circuits. After adjustment, the performance should be checked by the procedure described under the Performance Check part. We recommend adjusting only those circuits that do not meet performance criteria.

Since most instruments will have one or more options, procedures for these options are a sub-part of the step and integrated into this section.

The limits, tolerances, and waveform illustrations are aids to calibrate the instrument and are not intended as performance specifications.

HISTORY INFORMATION

The instrument and manual are periodically evaluated and updated. If modifications require changes in the calibration procedure, history information applicable to earlier instruments is included as a deviation within a step or as a sub-part to a step.

EQUIPMENT REQUIRED

Table 3-1 lists the test equipment and calibration fixtures recommended for the Performance Check and Adjustment Procedure. The characteristics specified are the minimum required for the checks. Substitute equipment must meet or exceed these characteristics. Special calibration fixtures that are listed facilitate the procedure. These are available from Tektronix, Inc., and may be ordered through your local Tektronix Field Office or representative.

Sophisticated test equipment and/or procedures are required to accurately measure some high tolerance characteristics. In these cases, a compromise may be made in the procedure. Any compromise is indicated by a footnote. Procedures to check these high tolerance specifications, when a compromise has been made, can be supplied by Tektronix Service Centers.

REMOVING THE CABINET

Set the 492 on its face and loosen the four screws through the two rubber feet. Pull the cover off the instrument.

Table 3-1

EQUIPMENT REQUIRED

Equipment or Test Fixture	Characteristics	Recommendation and Use
PERFORMANCE CHECK		
Test Oscilloscope	Vertical sensitivity, 50 mV/Div to 5 V/Div.	Any TEKTRONIX 7000-Series oscilloscope with plug-in units for real-time display such as: 7A11, 7B50A, and P6108 1X Probe (used to monitor signal and voltage levels).
Two Time Mark Generators	Marker output, 1 s to 1 μs; accuracy, 0.001%.	TEKTRONIX TG 501 and TM 500-Series Power Module (used to check time/div and span accuracy).
Digital Frequency Counter	10 Hz to 1 GHz, 20 mV rms sensitivity	TEKTRONIX DC 508 Digital Counter (used to measure calibrator frequency).

Table 3-1 (cont)

Equipment or Test Fixture	Characteristics	Recommendation and Use
Function or Sine-Wave Generator	1 Hz to 1 MHz; 0 to 20 V p-p.	TEKTRONIX FG 503 Function Generator (used to check external trigger and horizontal input requirements).
Signal Generator(s)	10 Hz to 10 MHz constant output.	Hewlett-Packard Model 654 (used to check frequency response).
	Two 500 kHz to 2.0 GHz generators calibrated and leveled. Output, +10 dBm to −100 dBm; spectral purity, ⩾60 dB below fundamental.	Hewlett-Packard Model 8640A/B Option 002 and two 8614A (used to check frequency response; also used as a signal source for IM and display accuracy checks).
Sweep Oscillator	100 kHz to 18 GHz; frequency response, ±1.0 dB.	Hewlett-Packard Model 8620C with Model 86290A Option 8 and 86222B Sweep Oscillators (used to check frequency response and flatness).
Power Divider		Hewlett-Packard Model 11667A.
Power Meter with Power Sensors	−60 dBm to −20 dBm full scale; 100 kHz to 18 GHz.	Hewlett-Packard Model 435A with 8482A and Power Sensors.
Vector Voltmeter or	Frequency to 100 MHz.	Hewlett-Packard Model 8405A (used to check CALibrator OUTput).
Power Meter with Low-Pass Filter	Measure −20 dBm within ±0.1 dB. The filter must have rolloff of 40 dB or more at 200 MHz.	Hewlett-Packard Model 435A with 8481A Sensor (used to check CALibrator OUTput). Filter: Texscan or Lark.
Comb Generator UHF	Provide comb line to 18 GHz; accuracy, 0.01%.	TEKTRONIX Calibration Fixture 067-0885-00 with TM 500 Power Module (used to check frequency readout accuracy).
Spectrum Analyzer	Frequency range, 2.0 — 3.0 GHz.	TEKTRONIX 7L18, 7L13 MOD 139U, or 492 (used to adjust 1st and 2nd LO frequency offset.
Attenuator (SMA connectors)	3 dB, 50 Ω; dc to 20 GHz.	Weinchel Model 4M. Tektronix Part No. 015-1053-00.
Attenuators (bnc connectors; 2 required)	20 dB, 50 Ω; dc to 2.0 GHz.	Tektronix Part No. 011-0059-02.
Coaxial Cable (50 Ω, 5 ns SMA connectors)		Tektronix Part No. 015-1006-00.
Adapter (N male-to-SMA male)		Tektronix Part No. 015-0369-00.
Adapter (N male-to-bnc female)		Tektronix Part No. 103-0045-00.
T Connector (bnc)		Tektronix Part No. 103-0030-00.

Table 3-1 (cont)

Equipment or Test Fixture	Characteristics	Recommendation and Use
Step Attenuators	Range, 0—110 dB in 10 dB and 1 dB steps; accuracy, ±0.1 dB; frequency range, dc to 18 GHz.	Step attenuator such as Hewlett-Packard 8494B and 8496B, calibrated by precision standard attenuators; such as Weinchel Model AS-6 attenuator.
Coaxial Cables (50 Ω; 2 required)		Tektronix Part No. 012-0482-00.
ADJUSTMENTS		
All the items listed above plus the following are required for the Adjustment procedure.		
Return Loss Bridge	10 MHz to 1 GHz, 50 Ω.	Wiltron VSWR Bridge Model 62BF50.
Attenuator (3 dB miniature)	Frequency, to 5 GHz; connectors, 5 mm.	NARDA Model 4479 with male-to-male connectors.
Autotransformer	Capable of varying line voltage from 90 to 130 Vac.	General Radio Variac Type W10MT3.
Digital Multimeter	⩽10 μV to ⩾350 Vdc	TEKTRONIX DM 501A or DM 502A
DC Block		Tektronix Part No. 015-0221-00.
Adapter (Sealectro male-to-male)		Tektronix Part No. 103-0098-00; Sealectro Part No. 51-072-0000.
Adapter (bnc female-to-Sealectro male)		Tektronix Part No. 103-0180-00.
Three Extension Cables (Sealectro female-to-Sealectro male)[a]		Tektronix Part No. 175-2902-00.
Adapter (bnc-to-Sealectro)		Tektronix Part No. 175-0419-00.
Adapter (bnc female-to-SMA male)		Tektronix Part No. 015-1018-00.
Cable (20"), Tip plugs to bnc		Tektronix Part No. 175-1178-00.
Coaxial cable (8")		Tektronix Part No. 012-0208-00.
Screwdriver, tuning		Tektronix Part No. 003-0675-00.
Screwdriver, flat	6" with 1/8" tip.	
Screwdriver, Phillips type		No. 1.
Allen wrenches (3)		3/32", 5/64", 7/64".
Service Kit (Extender boards)[a]		Tektronix Part No. 672-0865-00.

[a] **These fixtures are part of the Service Kit 006-3286-00, listed in the Maintenance Section.**

PERFORMANCE CHECK PROCEDURE

INTRODUCTION

As stated in the section introduction, the following procedure checks the 492 operation and performance requirements listed under electrical characteristics in the Specification section. The tests do not include any internal adjustments or checks. The checks should be performed in the sequence given because some tests rely on the satisfactory performance of related circuits. They are also arranged to minimize test equipment setup. If a performance measurement is marginal or below specification, an adjustment procedure to optimize the circuit performance will be found under a similar heading in the Adjustment part of this section. If adjustment fails to return the circuit to specified performance, refer to the Maintenance section for troubleshooting and repair procedures. After adjustment, return to the Performance Check to continue with the calibration process.

CAUTION

Refer to the safety warning page at the front of the manual before performing any adjustments.

INCOMING INSPECTION TEST

The Operators manual contains a functional check that checks all functions of the 492. This check is recommended for incoming inspections because it provides a reliable indication that the instrument is performing properly. This Performance Check procedure checks all instrument specifications and requires sophisticated equipment as well as technical expertise to perform.

PRELIMINARY PREPARATION

a. Perform the initial calibration described under Turn On Procedure in the Operators manual..

b. Set the front panel controls as follows:

BASELINE CLIP	Off
TRIGGERING	FREE RUN
TIME/DIV	AUTO
FREQUENCY RANGE	Band 1 (0—4.2 GHz, 0—1.8 GHz Option 1)
FREQUENCY	100 MHz
Vertical Display	10 dB/DIV
FREQ SPAN/DIV	100 kHz
AUTO RESOLUTION	On
RF LEVEL	−20 dBm
MIN RF ATTEN dB	0
MIN NOISE (pushbutton)	Off (MIN DISTORTION)
FINE (pushbutton)	Coarse (not illuminated)
Digital Storage (Option 2)	
VIEW A	On
VIEW B	On
MAX HOLD	Off
SAVE A	Off
B—SAVE A	Off
PEAK/AVERAGE	Fully cw

c. Allow the instrument to warm up for at least 2 hours before proceeding with this check.

1. Check Operation of Front Panel Pushbuttons and Controls

The following procedure checks functions activated by front panel pushbuttons and that the buttons illuminate when the function is active. Operation of the front panel controls is also checked.

With the CAL OUT signal applied to the RF INPUT, tune the 100 MHz, −20 dBm signal to center screen. Reduce the FREQ SPAN/DIV to 100 kHz keeping the signal centered on screen with the FREQUENCY control. Press or change the following pushbuttons and controls and note their effect.

INTENSITY. Rotate the control through its range and note crt beam brightness change.

READOUT. Inactive state, no crt readout. Active state, crt readout of REF LEVEL, FREQUENCY, FREQ SPAN/DIV, VERT DISPLAY, RF ATTEN, FREQ RANGE, and RESOLUTION BANDWIDTH. The INTENSITY control changes brightness.

GRAT ILLUM. Inactive state, no graticule lights. Active state, graticule lighted.

BASELINE CLIP. Inactive, no clipping of the display baseline. Active, display intensity at the baseline is clipped (subdued).

TRIGGERING. Triggering mode is activated by pressing one of four pushbuttons. Pressing any one of the buttons cancels or deactivates the other mode.

FREE RUN. Active, trace free runs.

INT. Active, trace displayed when signal or noise level at left edge is ≥1.0 division.

LINE. Active, trace triggered at power line frequency.

EXT. Active, trace runs when an external signal ≥0.5 volt peak terminated in 1 kΩ or less is applied to the back panel EXT IN connector.

SINGLE SWEEP. Pressing this button to activate single sweep aborts the recurrent sweep; pressing the button again arms the sweep generator and lights READY, which remains lighted until the sweep completes. The analyzer makes a single sweep of the selected spectrum when the conditions determined by TRIGGERING are met. Single sweep mode is cancelled when any TRIGGERING button is pressed. The effect of SINGLE SWEEP may be more apparent if VIEW A, VIEW B, and B—SAVE A are off.

TIME/DIV. Selects sweep rate and manual scan operation. In MNL position, MANUAL SCAN controls should vary the crt beam across the full horizontal axis of the crt graticule.

VERTICAL DISPLAY. Display modes are activated by three pushbuttons. Pressing any of these buttons cancels the other mode.

10 dB/DIV. Active, display is a calibrated 10 dB/division, 80 dB dynamic range. Calibration is checked later in this procedure.

2 dB/DIV. Active, display is calibrated 2 dB/division, 16 dB dynamic range. Calibration is checked later in this procedure.

LIN. Active, display is linear between the reference level (top of graticule) and zero volt (bottom of graticule); the crt VERT DISPLAY reads out in volts/division.

PULSE STRETCHER. Active, increases the fall time of video signals to make narrow pulses on the display easier to see. With FREQ SPAN/DIV at MAX, TIME/DIV at 5 ms and Digital Storage off, the markers should increase in brightness when PULSE STRETCHER is active.

VIDEO FILTER. Two filters, independently selected to provide WIDE (1/30th) or NARROW (1/300th) of the resolution bandwidth for noise reduction.

DIGITAL STORAGE (Option 2). Either or both sections of memory can be selected to provide digital storage. When either or both are activated, signal amplitude should remain constant. Vary the PEAK/AVERAGE control and note that noise level below the PEAK/AVERAGE cursor is averaged.

VIEW A/VIEW B. When SAVE A is off, either VIEW A or VIEW B will display all data (1024 bits) in memory. Both sections of memory are updated each sweep. When SAVE A is activated, VIEW A displays data saved in the A section of memory (512 bits) and VIEW B displays data (512 bits) in the B section of memory. B section is updated each sweep.

SAVE A. Active, contents in A memory are saved and not updated. Verify operation by changing REF LEVEL and observe that the VIEW A display does not change when VIEW B is inactive.

MAX HOLD. Active, stores maximum signal amplitude at each memory location. Verify operation by changing FREQUENCY or REF LEVEL and note that the maximum level at each location is retained.

B—SAVE A. Active, the difference between updated data in B section of memory and that saved in A is displayed. Verify by saving data in A, then changing the reference level and pressing B—SAVE A; only the difference can be observed by cancelling VIEW A and VIEW B. The reference (zero difference) level is normally set at graticule center, but can be internally adjusted by service personnel (see Adjustment Procedure, Step 12).

PEAK/AVERAGE. When digital storage is activated with VIEW A or VIEW B, this control positions a horizontal line or cursor on the display. Signals above the cursor are peak detected; signals below the cursor are averaged. The cursor should position anywhere within the graticule window.

IDENTIFY 500 kHz/ONLY. When active, the vertical position of the display alternately shifts about one division. Spurious signals shift horizontally on the alternate sweep, true signals do not shift. Reduce FREQ SPAN/DIV to 500 kHz with a signal tuned to center screen, reduce TIME/DIV to a slow sweep rate, and press the IDENTIFY button. Note the display of the calibrator signal.

PHASE LOCK (Option 3). Activated to reduce residual FM when narrow spans are selected. The button lights when active; pressing the button turns phase lock off. When active, the microcomputer automatically selects phase lock for a span/division of 50 kHz or below in bands 1 through 3, 100 kHz or below in band 4, and 200 kHz or below in bands 5 and above.

AUTO RESOLUTION. When activated, RESOLUTION BANDWIDTH changes so bandwidth is compatible with FREQ SPAN/DIV selection. Check by changing FREQ SPAN/DIV and noting that RESOLUTION BANDWIDTH changes. UNCAL indicator should not light over the FREQ SPAN/DIV range if TIME/DIV selector is in AUTO position.

FREQUENCY SPAN/DIV. As this control is rotated clockwise or counterclockwise FREQ SPAN/DIV should change from 0 to MAX in 1-2-5 sequence as the control is rotated counterclockwise. Display should indicate this change. Range of the Span/Div depends on Option (see Specification section).

RESOLUTION BANDWIDTH. As this control is rotated, resolution bandwidth should change in decade steps from 1 MHz to 1 kHz (100 Hz Option 3).

ΔF. When activated, center frequency readout initializes to 0 MHz. The frequency difference, to a desired signal or point on the display, can now be determined by tuning that point to center screen and noting the readout. Check by measuring the difference between calibrator markers. If the frequency is tuned below "0", the readout will indicate minus (−).

DEGAUSS. When pressed, residual magnetism build-up in the local oscillator system is reduced. Switch FREQ SPAN/DIV to 1 MHz and tune the calibrator marker to center screen. Note the signal position, then press the DEGAUSS button. The signal should shift horizontally and then return to a new location. Press again and the signal should return to the same new location. Return FREQ SPAN/DIV to 100 MHz.

FREQUENCY RANGE. Two pushbuttons that shift the 492 frequency bands. Press the Δ button and note the up shift of bands; then press the ∇ button and note that the bands shift down to the 0 to 4.2 GHz range (0 to 1.8 GHz Option 1).

CAL. Checked when performing Turn On Procedure.

REFERENCE LEVEL. Continuous control that requests the microcomputer to change the reference level one step for each detent. In the 10 dB/DIV Vertical Display mode, the steps are 10 dB. When FINE is activated, the steps are 1 dB. In the 2 dB/DIV mode, the steps are 1 dB or 0.25 dB for the FINE mode. When FINE is activated in the 2 dB/DIV mode, the ΔA mode is operational. The REFERENCE LEVEL goes to 0.00 dB then steps in 0.25 dB increments from an initial 0.00 dB reference level.

Set the MIN RF ATTEN to 0 dB. Vertical display to 10 dB/DIV, and rotate the REFERENCE LEVEL control counterclockwise to +30 dBm then clockwise to −120 dBm. Note the change in the display. Return the REF LEVEL to −20 dBm and note that 10 dB of RF ATTEN is switched in at −20 dBm.

MIN RF ATTEN. Sets the minimum amount of RF attenuation. Changing RF LEVEL will not decrease RF attenuation below that set by the MIN RF ATTEN selector.

FINE. When activated, REF LEVEL switches in 1 dB increments for 10 dB/DIV display mode, and 0.25 dB for 2 dB/DIV display mode. In the 2 dB/DIV display mode, FINE actuates ΔA mode. See Delta A Mode description in the Operators manual under General Operating Information.

MIN NOISE/MIN DISTORTION. One of two algorithms is selected to control attenuator and IF gain. MIN NOISE (button illuminated) reduces the noise level by reducing attenuation 10 dB and decreasing IF gain 10 dB. MIN DISTORTION reduces IM distortion due to input mixer overload. To observe any change, the RF ATTEN, displayed by the crt readout, must be 10 dB higher than that set by the MIN RF ATTEN selector.

UNCAL. This light comes on when the display is uncalibrated. Set the TIME/DIV to 50 ms, deactivate the AUTO RESOLUTION, and set the RESOLUTION BANDWIDTH to 10 kHz. UNCAL should light and remain lit until the FREQ SPAN/DIV is reduced to 200 kHz or the RESOLUTION BANDWIDTH is increased to 1 MHz. Return the TIME/DIV to AUTO and activate the AUTO RESOLUTION. Set the FREQ SPAN/DIV to 100 MHz.

EXTERNAL MIXER/PEAKING. In active mode, bias for external waveguide mixers is provided at the EXT MIXER connection. Activate the External Mixer mode by changing the FREQUENCY RANGE to 18—26 GHz and then measure the bias with a VOM between the center conductor and ground of the EXT MIXER port. Bias should range from about −2.0 to +1.0 volts as the PEAKING control is varied.

If the instrument has a preselector (Option 1), the control also varies the preselector tuning to augment tracking for the coaxial bands (0—21 GHz).

This completes the functional check of the front panel controls and pushbuttons.

2. Check Frequency Readout Accuracy

Readout accuracy ±(5 MHz + 20% Span/Div) x n or ±(0.2% of center frequency + 20% of the span/division),

whichever is greater. "n" is the harmonic number of the 1st LO that is used in the first conversion. Table 3-2 lists "n" and bands.

Table 3-2

HARMONIC NUMBER (n) vs FREQUENCY RANGE

Band	Frequency Range	n
1	0.0—4.2 GHz (0.0—1.8 GHz, Option 1)	1
2	1.7—5.5 GHz	1
3	3.0—7.1 GHz	1
4	5.4—18 GHz	3
5	15—21 GHz	3
6[a]	18.0—26.5 GHz	6
7[a]	26—40 GHz	10
8[a]	40—60 GHz	10
9[a]	60—90 GHz	15
10[a]	90—140 GHz	23
11[a]	140—220 GHz	37

[a]External Mixer required.

NOTE

Due to residual magnetism buildup in the 1st (YIG) oscillator tuning coils, accuracy of the frequency readout should be checked after the tuning coil has been degaussed by pressing the DEGAUSS button. Degauss when the FREQ SPAN/DIV is either 2 MHz or 1 MHz before reducing the FREQ SPAN/DIV to 500 kHz.

a. Test equipment setup is shown in Fig. 3-1. Set the front panel controls as follows, then apply the comb generator output to the RF INPUT.

FREQUENCY RANGE	0—4.2 GHz (0—1.8 GHz Option 1)
FREQUENCY	1.0 GHz
FREQ SPAN/DIV	200 MHz
AUTO RESOLUTION	On
MIN RF ATTEN	20 dB
Vertical Display	10 dB/DIV
Video Filter	WIDE
TIME/DIV	AUTO
Digital Storage (Option 2)	VIEW A/VIEW B

b. Tune the 1.0 GHz comb line to center screen. Decrease the FREQ SPAN/DIV to 2 MHz or 1 MHz, keeping the

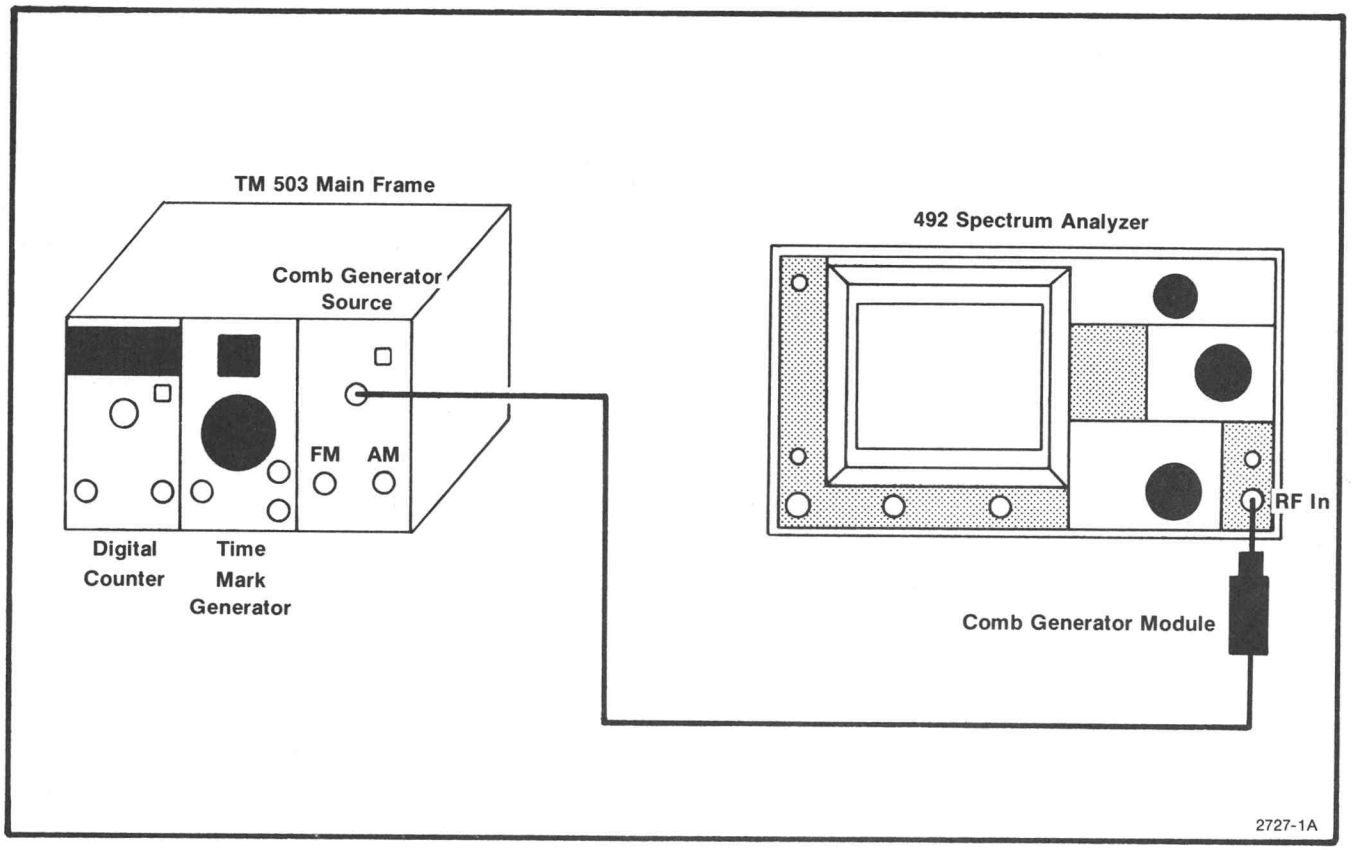

Fig. 3-1. Test equipment setup for checking frequency of the calibrator and the accuracy of the frequency readout.

1.0 GHz signal centered. Press the DEGAUSS button, decrease the FREQ SPAN/DIV to 500 kHz, and center the signal under the frequency dot.

c. Press the IDENTIFY 500 kHz/ONLY button to verify that the signal is a true response. Deactivate the identify feature. If the signal is true, activate the FREQUENCY CAL pushbutton.

d. Calibrate the frequency readout by adjusting the frequency control for a readout of 1.000 GHz. De-activate the CAL pushbutton.

e. Return the FREQ SPAN/DIV control to 200 MHz and tune the FREQUENCY to the next comb line (1.5 GHz). Decrease the FREQ SPAN/DIV to 2 MHz, degauss the tuning coils, then decrease the span to 500 kHz/div and center the comb line under the frequency dot. Press the IDENTIFY 500 kHz/ONLY pushbutton to verify that the signal is a true response. If true, check the frequency readout accuracy. If a spurious response, tune to the next marker and check. Readout must equal 1.500 GHz ±(5 MHz + 20% Span/Div) x n or; ±(0.2% of Center Frequency + 20% Span/Div) whichever is greater.

f. Repeat this process checking frequency readout accuracy in 1 GHz or 2 GHz increments for bands 1 through 3 (0 to 7.1 GHz).

Since the other bands operate on harmonics of the oscillator fundamental, accuracy or error will be the same as that measured for the fundamental bands multiplied by the harmonic number (n) of the band.

If you choose to check the higher bands, it may be necessary to increase the REF LEVEL to −10 dBm to locate true response of the 500 MHz comb. MIN RF ATTEN should not be decreased below 10 dB unless the instrument has the preselector (Option 1). When checking instruments with the preselector, adjust the PEAKING control for maximum signal response, when operating above band 1 (0 to 1.8 GHz), as each signal is tuned to center screen.

g. Leave the comb generator connected for 492P; disconnect the comb generator for the 492.

2.a. 492P only (Tune accuracy check ±7% *n or 150 kHz *n, whichever is greater, after a 2-hour warm-up, in bands 1 and 2).

a. Enter this short program on a 4050-Series controller:

```
100 REMARK TUNE CHECK
110 PRINT @1: "SAVEA OFF;TRIG FRERUN"
120 WBYTE @33,1:
130 INPUT T$
140 PRINT @1:"SIGSWP;SAVEA ON;TUNE ";T$;
    ";SIGSWP"
150 INPUT W$
160 GO TO 110
```

b. Connect the 4050-Series controller to the 492P with a GPIB cable (both should already be turned on). Set the 492P GPIB ADDRESS switches for address 1 (switch 1 up, all others in the switch bank down).

c. Change the front-panel controls for:

FREQUENCY RANGE	1.7-5.5 GHZ
FREQ SPAN/DIV	200 MHz
FREQUENCY	2.0 GHz
VIDEO FILTER	Off
PEAK/AVERAGE	Fully cw

d. Type Run and press RETURN on the controller. Line 110 of the program immediately sets the sweep and digital storage so you can change FREQUENCY and other local controls as required for the TUNE check. Line 120 restores local control with the GTL message.

e. Center the marker while spanning down to 10 MHz/div. Vary PEAKING as necessary and set REFERENCE LEVEL as desired to display the marker. For non-option 01 instruments, span down to 500 kHz and use IDENTIFY to make sure the analyzer is centered on a real signal, then return to 10 MHz/div.

f. Enter 500M (type 500M and press RETURN). If you make an error in this procedure, press BREAK twice and run the program again. If the 492P asserts SRQ (evident by message on controller screen and S in 492P lower readout), enter WBYTE @20: to clear the SRQ.

g. The analyzer tunes 500 MHz, takes a single sweep, and sets up a display of the marker signal you centered and the signal acquired after the TUNE command executed. Note the error between the two signals.

h. Press RETURN to continue. Change FREQ SPAN/DIV to 200 MHz and change FREQUENCY to 3.0 GHz; repeat parts e through g. Then repeat for 4.5 GHz.

i. No error should exceed 3.5 divisions (7% of 500 MHz tune or 35 MHz).

So far, you have checked performance related to the upper DAC of the 1st LO center frequency control. The next parts of this step concern the lower DAC for the 1st LO.

j. Press RETURN and change the following controls:

FREQUENCY RANGE	0-4.2 GHz (0-1.8 GHz, Option 01)
FREQ SPAN/DIV	200 MHz
FREQUENCY	Close to 1 MHz
REF LEVEL	+30 dBm

k. Disconnect the microwave comb generator and connect the time mark generator to the RF INPUT. Set the time mark generator for 1 μs output.

l. Change FREQUENCY (and REF LEVEL as necessary) while spanning down to 100 kHz/div to center a marker.

o. Type 1M and press RETURN on the controller. Note the difference in the displayed signals, then press RETURN again.

p. Repeat part o seven times. Reset FREQUENCY, after noting the error, if the accumulated TUNE error appears about to force the signal off the crt display. (The FREQUENCY control is active at the point where you note the TUNE error.) The largest error should not exceed 1.5 div (150 kHz).

This completes a check of TUNE command performance related to the 1st LO. The next parts of this step check the upper DAC of the pair that control 2nd LO center frequency.

q. Span up to 1 MHz/div and change FREQUENCY to center a marker at least three away from the zero-hertz marker.

r. Span down to 10 kHz/div, keeping the marker centered, and change time mark output to 10 μs. Change REFERENCE LEVEL as necessary to keep the marker above the noise.

s. Type 100K and press RETURN on the controller. Note the difference in the displayed signals, then press RETURN again.

t. Span back up to 50 kHz/div, restore time mark output to 1 μs, and tune FREQUENCY two markers to the left (−2 MHz). Repeat parts r and s.

u. Span back up to 50 kHz/div, restore time mark output to 1 μs, and tune FREQUENCY four markers to the right (+4 MHz). Repeat parts r and s.

v. The largest error noted should not exceed 0.7 div (7% of 100 kHz tune or 7 kHz).

This completes a check of the 2nd LO upper DAC. A check of the 2nd LO lower DAC follows. Perform the rest of this step for option 03 instruments only.

w. Keep the marker centered while reducing FREQ SPAN/DIV to 1 kHz (change REFERENCE LEVEL as necessary).

x. Change time mark output to 0.2 ms, keeping the marker centered.

y. Enter 5K at the controller and note the difference in the displayed signals. Since more than two time marks may be displayed, note the difference between the centered time mark and the nearest other time mark. The difference should not exceed 0.35 div (7% of 5 kHz tune or 350 Hz).

3. Check Calibrator (frequency 100 MHz ±0.001%, output level −20 dBm ±0.3 dB)

a. Check the calibrator frequency by connecting a frequency counter (e.g., TEKTRONIX DC 508 or Hewlett-Packard Model 5340-A Digital Counter) to the 492 CAL OUT connector and measure the frequency. Fundamental frequency is 100 MHz ±10 kHz.

b. Three procedures for measuring output level are given; vector voltmeter, power meter, and comparison method using an accurate −20 dBm source.

1. Vector Voltmeter Method

a. Terminate the voltmeter probe with a 50 Ω feedthrough termination and then connect the terminated probe to the 492 CAL OUT connector (Fig. 3-2).

b. Set the vector voltmeter frequency to 100 MHz.

c. Check—for an rms reading between 21.11 mV and 22.69 mV (−20 dBm is 22.36 mV rms across 50 Ω).

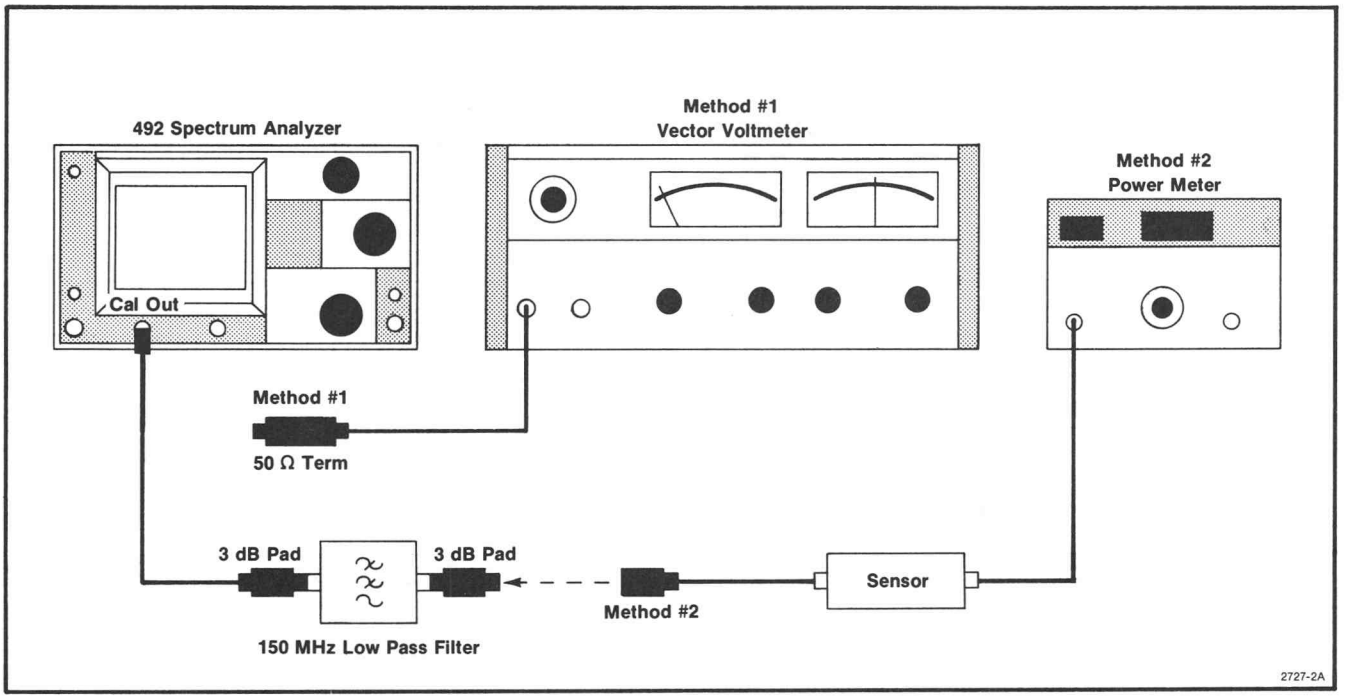

Fig. 3-2. Test equipment setup showing two methods that check calibrator output level.

2. Power Meter Measurement

   a. Test equipment setup is shown in Fig. 3-2.

   b. Connect the power meter sensor through a low-pass filter (≥40 dB at 200 MHz to remove harmonics of the fundamental) to the CAL OUT connector.

NOTE

Insertion loss of the filter with pads, measured at 100 MHz, must be determined to within ±0.05 dB. To ensure a 50 Ω match, use approximately 3 dB minimum-loss matching pads (attenuator) on both sides of the filter.

   c. Note the power reading. Reading, plus the loss through the filter and pads, must equal −20 dBm ±0.3 dB.

3. Signal Substitution Method

NOTE

A power meter is used to verify the output level of the reference signal. Harmonics of the signal source must be greater than 40 dB down.

   a. Apply a 100 MHz signal from a signal source (signal generator) through a 3 dB attenuator to the power meter. Adjust the output level for −20.0 dBm reading on the power meter.

   b. Set the front panel controls as follows:

FREQUENCY	100 MHz
FREQ SPAN/DIV	500 kHz
RESOLUTION	1 MHz
REF LEVEL	−10 dBm
TIME/DIV	AUTO
Video Filter	Off
Digital Storage (Option 2)	VIEW A/B
PEAK/AVERAGE	Fully cw

   c. Disconnect the meter and (using the same instrument cable and attenuator) apply the calibrated reference signal to the 492 RF INPUT.

   d. Switch to the 2 dB/DIV display mode and tune the reference signal to center screen. Select a REF LEVEL that positions the top of the signal to a graticule line (2nd or 3rd from the top of the screen). Select a span/div and resolution bandwidth to obtain a broad display for more accurate measurement. If the 492 has Option 2, store the reference display by activating SAVE A.

e. Remove the reference signal and apply the CAL OUT signal to the RF INPUT.

f. Note the displacement of the CAL signal from the reference. If the 492 has Option 2, activate B—SAVE A and note the displacement between the CAL signal and the reference. Displacement must not exceed 0.3 dB (1.0 minor divisions with a 2 dB/DIV display mode).

NOTE

If greater accuracy is desired, the vertical signal can be amplified through an external amplifier, such as the TEKTRONIX 7A15, to increase the vertical sensitivity. This is done by applying the vertical signal at the rear panel VERT connector of the 492 to the external amplifier input and selecting the vertical amplification and Time/Div values that provide the degree of accuracy desired.

4. Check RF Attenuator (within 0.3 dB/10 dB to a maximum of 0.7 dB over the 60 dB range to 4 GHz; within 0.5 dB/10 dB to a maximum of 1.4 dB over the 60 dB range to 18 GHz)

NOTE

The attenuator is factory checked to ensure accuracy. Any change in characteristics should be large enough to be readily noticed in operation. The Functional Check in the Operators manual provides a good indication of attenuator performance and would detect component failure. External 10 dB, 20 dB, or a 30 dB step attenuator (calibrated by the user or manufacturer to within 0.05 dB) must be used as a standard to check the RF attenuator in this procedure.

a. Test equipment is shown in Fig. 3-3. Apply a 0 dBm, 4 GHz signal, from a signal generator through 30 dB of calibrated attenuation to the RF INPUT of the 492. Set the front panel controls as follows:

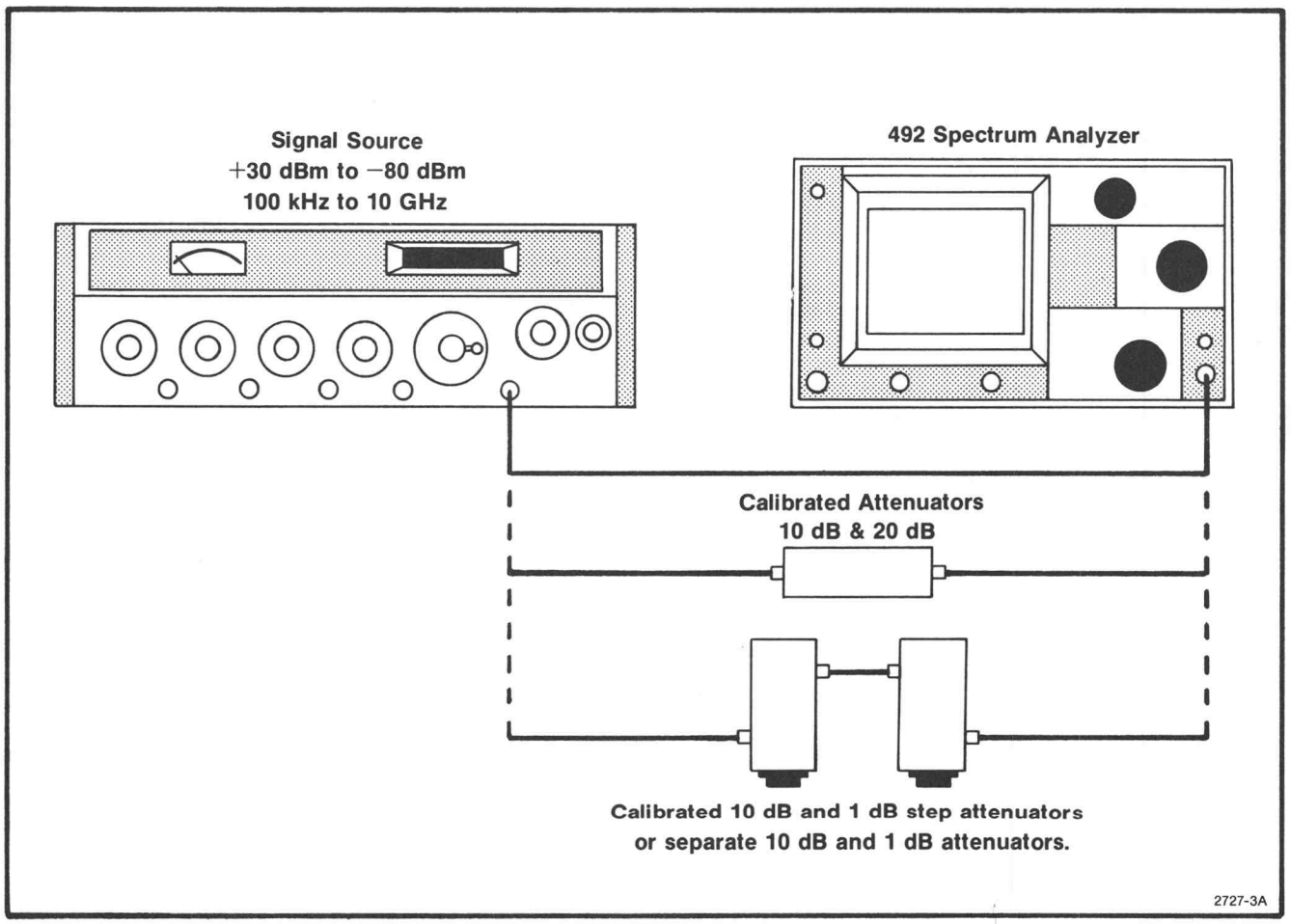

Fig. 3-3. Test equipment setup for verifying attenuator and gain accuracy.

FREQUENCY RANGE	Band 3 (3.0—7.1 GHz)
FREQ SPAN/DIV	200 MHz
AUTO RESOLUTION	On
REF LEVEL	−30 dBm
Vertical Display	10 dB/DIV
TIME/DIV	AUTO

b. Tune the signal to center screen as the FREQ SPAN/DIV is reduced to 20 kHz and change the RESOLUTION BANDWIDTH to 100 kHz. Activate the 2 dB/DIV Vertical Display mode and the NARROW Video Filter. Adjust the signal generator output so the signal peak is at some graticule reference level, such as seven divisions. If the instrument has Digital Storage, activate SAVE A.

c. Change the REFERENCE LEVEL 10 dB by switching to −20 dBm (this will add 10 dB of RF ATTENuation).

d. Remove 10 dB of external attenuation and compare the difference between the reference level and the new level. Variation plus the calibrated 10 dB external attenuator correction factor must not exceed 0.3 dB. (If Digital Storage is provided, activate B—SAVE A to obtain the differential. De-activate SAVE A and B—SAVE A.)

e. Re-adjust the signal generator output to establish a new reference level. Repeat the process to check the 20 dB attenuator by switching the REF LEVEL from −30 dBm to −10 dBm for 20 dB ATTEN, then remove 20 dB of external attenuation. Error must not exceed 0.6 dB.

f. Re-install the 30 dB of external attenuation and set the REF LEVEL to −30 dBm. Re-establish a signal reference level as described above.

g. Check the 30 dB attenuator against the external standard, by switching the REF LEVEL to 0 dBm, for 30 dB RF ATTEN, then remove 30 dB of external attenuation. Error must not exceed 0.7 dB. (Include the calibrated attenuator correction factor.)

h. Since the remaining 60 dB range of the RF ATTENuator is obtained by the combination of these three attenuators, this completes the check of the RF attenuator. Error of any combination must not exceed 0.7 dB.

5. Check IF Gain Accuracy (±0.2 dB/dB and 0.5 dB/10 dB to a maximum of ±2 dB over the full 90 dB range, 70 dB for a non-option 3 instrument)

NOTE

This check requires calibrated attenuators as the standard to check the 10 dB and 1 dB steps. When making signal measurements within 10 dB of the noise floor, a correction factor should be used to correct for the logarithmic addition of noise in the system and analyzer, as shown in Table 3-2A.

a. Test equipment setup is shown in Fig. 3-3. Apply a −20 dBm, 100 MHz signal, from the signal generator through 10 dB and 1 dB step attenuators (set at 0 dB), to the RF INPUT; or directly to the RF INPUT of the 492 if individual fixed attenuators are to be used as the standard. Set the front panel controls as follows:

FREQ SPAN/DIV	20 MHz
AUTO RESOLUTION	On
Vertical Display	10 dB/DIV
Video Filter	WIDE
REF LEVEL	−10 dBm
MIN RF ATTEN	10 dB

b. Tune the signal to center screen, then decrease the FREQ SPAN/DIV to 10 kHz. Now change the RESOLUTION BANDWIDTH to 10 kHz and again center the signal on screen.

c. Change the Vertical Display to 2 dB/DIV. Adjust the signal generator output so the signal amplitude is six divisions with the top of the signal positioned on the 6th graticule line.

d. Activate MIN NOISE and note signal level shift. Shift must not exceed ±0.8 dB, or 2 minor divisions (attenuator plus gain accuracies).

e. Re-position the signal level to the graticule reference line by adjusting the output of the signal generator.

Table 3-2A

CORRECTION FACTOR TO DETERMINE TRUE SIGNAL LEVEL

Ratio in dB of signal plus noise to noise	3.01	4.0	5.0	6.0	7.0	8.0	9.0	10.0	12.0	14.0
Subtract this correction factor for true signal level	3.01	2.20	1.65	1.26	0.97	0.75	0.58	0.46	0.28	0.18

f. Switch the REF LEVEL from −10 dBm to −20 dBm in 1 dB steps, adding 1 dB of external attenuation at each step and note incremental accuracy and the 10 dB gain accuracy. Incremental accuracy must be within 0.2 dB/dB (0.5 minor division). Maximum cumulative error must not exceed 0.5 dB (1.5 minor division) except when stepping from 9 dB to 10 dB increment, where the error could be an additional 0.5 dB.

g. De-activate MIN NOISE. Return the 1 dB step attenuator to 0 dB, decrease the signal generator output to 10 dB or add 10 dB of external attenuation with the 10 dB step attenuator. Re-adjust the generator output so the signal level is again at the reference line (6 division amplitude).

h. Change the REF LEVEL in 1 dB increments from −20 dBm to −30 dBm adding 1 dB increments of external attenuation with the 1 dB step attenuator and note incremental and 10 dB step accuracies.

i. Return the 1 dB step attenuator to 0 dB, decrease signal level 10 dB by adding 10 dB more of external attenuation or decreasing the signal generator output level then re-establish the signal reference amplitude.

j. Check the −30 dBm to −40 dBm gain accuracies as previously described.

k. Repeat the procedure checking gain accuracies to −70 dBm.

l. Establish a signal reference at −70 dBm, activate NARROW VIDEO FILTER, then check gain accuracy to −80 dBm.

m. Limitation to gain variation measurements over the remaining range, is imposed by noise and residual FM'ing. Without Option 3 (phaselock stabilization) oscillator FM'ing limits practical gain variation measurements to the 10 kHz resolution bandwidth position which further compounds the measurement problem with a 10 dB higher noise floor than the 1 kHz resolution bandwidth. The gain variation accuracy of the −80 dBm to −100 dBm REF LEVEL positions are closely related to the accuracy of the previous checks; therefore they are not validated in an instrument without Option 3.

If the instrument has Option 3 (phaselock) the 1 kHz resolution bandwidth is utilized. Proceed with the following:

1) Decrease the RESOLUTION BANDWIDTH and FREQ SPAN/DIV to 1 kHz and re-establish a signal reference level as described previously.

2) Check the −80 to −90 dBm gain accuracies by repeating the process previously described.

3) The remaining 10 dB of gain range cannot be checked accurately because of baseline noise. It is however, directly related to the −70 dBm to −80 dBm check.

6. Check Display Accuracy and Range (80 dB in 10 dB/DIV mode with an accuracy of ±0.5 dB/10 dB to a maximum cumulative error of ±2.0 dB over the 80 dB window; 16 dB in 2 dB/DIV mode with an accuracy of ±0.2 dB/dB to a maximum cumulative error of ±1.0 dB over the 16 dB window; Lin mode is ±5% of full scale)

a. Test equipment setup is shown in Fig. 3-3. Apply +10 dBm signal to the RF INPUT and set the front panel controls as follows:

REF LEVEL	+10 dBm
MIN RF ATTEN	0 dB
Video Filter	NARROW
Vertical Display	10 dB/DIV
FREQ SPAN/DIV	10 MHz
RESOLUTION BANDWIDTH	1 MHz

b. Tune the FREQUENCY to center the applied signal on screen. Reduce the FREQ SPAN/DIV and RESOLUTION BANDWIDTH to 10 kHz. Carefully adjust the generator output so the signal level is at the top graticule line.

c. Add external attenuation in 10 dB steps for a total of 80 dB and note that the signal steps down screen in 10 dB (±1.0 dB) steps. Maximum cumulative error should not exceed 2.0 dB over the display window.

d. Return the external attenuation to 0 dB and change the Vertical Display to 2 dB/DIV. Set the FREQ SPAN/DIV to 20 kHz and the RESOLUTION BANDWIDTH to 100 kHz. Adjust the signal amplitude to the top graticule line.

e. Repeat the procedure to check the accuracy of the 1 dB steps by adding external attenuation in 1 dB steps for a total of 16 dB. Deviation should not exceed ±0.4 dB/2 dB. Maximum cumulative deviation should not exceed ±1.0 dB over the 16 dB window.

f. Return the external attenuation to 0 dB. Change the Vertical Display to LIN. Adjust the signal generator output for a full screen display.

g. Change the REF LEVEL to 10 μV and add 6 dB of attenuation. Note that the signal amplitude decreases to 4, ±0.4 divisions.

h. Add an additional 6 dB of attenuation. Note signal amplitude decreases to 2, ±0.4 divisions.

i. Add another 6 dB of attenuation. Signal amplitude should decrease to 1.0, ±0.4 divisions.

j. Return the Vertical Display to 10 dB/DIV and disconnect the signal to the RF Input.

7. Amplitude Variation with Change in Resolution Bandwidth (±0.5 dB)

a. Apply the calibrator signal to the RF INPUT and set the front panel controls as follows:

FREQUENCY RANGE	0—4.2 GHz (0—1.8 GHz Option 1)
FREQUENCY	200 MHz
FREQ SPAN/DIV	20 MHz
RESOLUTION BANDWIDTH	1 MHz
Vertical Display	10 dB/DIV
REF LEVEL	−20 dBm
MIN RF ATTEN	0 dB

b. Tune the 200 MHz calibrator marker to center screen and reduce the FREQ SPAN/DIV to 500 kHz. Activate the FINE REFERENCE LEVEL function and adjust the REF LEVEL for a signal amplitude of six divisions.

c. Change the RESOLUTION BANDWIDTH to 100 kHz and the FREQ SPAN/DIV to 100 kHz. Check that the amplitude change is not more than 0.5 dB.

d. Repeat the procedure for 10 kHz resolution bandwidth with a FREQ SPAN/DIV of 10 kHz.

e. Repeat the procedure for the 1 kHz resolution bandwidth. (If the instrument has Option 3, reduce the SPAN/DIV to 1 kHz.)

f. If the 492 has Option 3, repeat the procedure to check amplitude variation for resolution bandwidths of 100 Hz with a FREQ SPAN/DIV of 500 Hz. (Video Filter must be off or WIDE to maintain a calibrated display at 100 Hz resolution.)

8. Check Frequency Response (±1.5 dB to 7.1 GHz, Bands 1, 2, and 3; and ±2.5 dB to 18 GHz, Band 4)

Frequency response is the amplitude deviation, over a given frequency range, of a constant level input signal measured at the analyzer center frequency. It includes input attenuation, mixer and preselector (when installed) response, plus mixing mode gain variations (band-to-band). Measurement requires many small incremental checks across the spectrum analyzer frequency range. Response at each check point must be optimized and separated from spurious responses that are prevalent in instruments without the preselector. Those instruments that have the preselector require re-adjusting the PEAKING control at each check point for frequencies above the range of band 1 (e.g., above 1.7 GHz). Because the frequency range of the 492 is very wide, measuring the response in small increments is a slow process. A more expeditious method using a sweep oscillator is described in this procedure.

The procedure for checking frequency response depends on the 492 configuration (options installed). Procedures for each configuration are described in four parts. *Refer to the appropriate part of this step to check your instrument.* Test equipment is the same for each procedure.

NOTE

Loss of signal through interconnecting cables becomes significant above 1 GHz; therefore, use short (25 inch or less) semi-rigid cable with precision fittings to interconnect the test equipment. Precision matching terminations and power dividers are used to minimize reflections.

Equipment	Recommended
Signal Generator 10 kHz—10 MHz	HP654
Signal Generator 10 MHz—18.0 GHz	HP8620C Sweeper with 86222B and HP86290A RF Plug-In Units
Power Meter 0 to −10 dBm, 10 MHz—18 GHz	HP435A with 8481A and 8482A Sensors
Power Divider	HP1167A
3 dB Attenuator, SMA Connectors	Weinschel Model 4M
High Performance 50 Ω Cable, SMA Connectors	See Equipment Required list
50 Ω Coaxial Cable, BNC Connectors	See Equipment Required list
Adapter N male-to-SMA male	See Equipment Required list

Part 1

Procedure for Instruments Without Options 1 or 2 (Preselector and Digital Storage)

a. Test equipment setup is shown in Fig. 3-4. Set the front panel controls as follows:

FREQUENCY RANGE	0—4.2 GHz (0—1.8 GHz Option 1)
FREQ SPAN/DIV	1 MHz
FREQUENCY	5 MHz
MIN RF ATTEN	30 dB
REF LEVEL	0 dBm
AUTO RESOLUTION	On
TIME/DIV	20 ms
Vertical Display	10 dB/DIV

b. Apply the output of a 100 kHz to 10 MHz signal generator, with an output monitor, to the RF INPUT of the 492. Set the generator frequency to 100 kHz and its output for −6 dBm to −10 dBm.

c. Change Vertical Display to 2 dB/Div and adjust the 492 REF LEVEL so the amplitude of the signal generator signal is about half screen.

d. Slowly tune the frequency of the signal generator across the 100 kHz to 10 MHz span, monitoring the output with the power meter to ensure a constant input signal level, and note amplitude variations. Response or variations must not deviate more than ±1.5 dB from the mean average.

e. Remove the 10 kHz to 10 MHz signal source and connect the test equipment as shown in Fig. 3-5. The output of the .01 to 2.4 GHz sweep generator is applied through a 3 dB attenuator and a semi-rigid high performance coaxial cable to a power divider. Connect one output of the power divider directly to the 492 RF INPUT and the other to the power sensor unit for the power meter. Ensure that all connections are snug.

f. With the FREQ SPAN/DIV at 200 MHz, tune the FREQUENCY to approximately 1.0 GHz. Adjust the generator cw frequency to 1.0 GHz and adjust the output for −6 dBm reading on the power meter.

g. With the Vertical Display at 2 dB/DIV, adjust the REF LEVEL so the amplitude of the signal is about half screen.

h. Set the sweep generator span so it sweeps from .01 to 2.2 GHz. Set the generator sweep mode for automatic internal sweep at its slowest sweep time (100 seconds). Monitor the power output as the generator sweeps across the span to ensure that the output remains constant. The frequency response (deviation from the mean average) must not exceed ±1.5 dB. A typical response for the frequency range of 3.6 to 5.6 GHz is shown in Fig. 3-6.

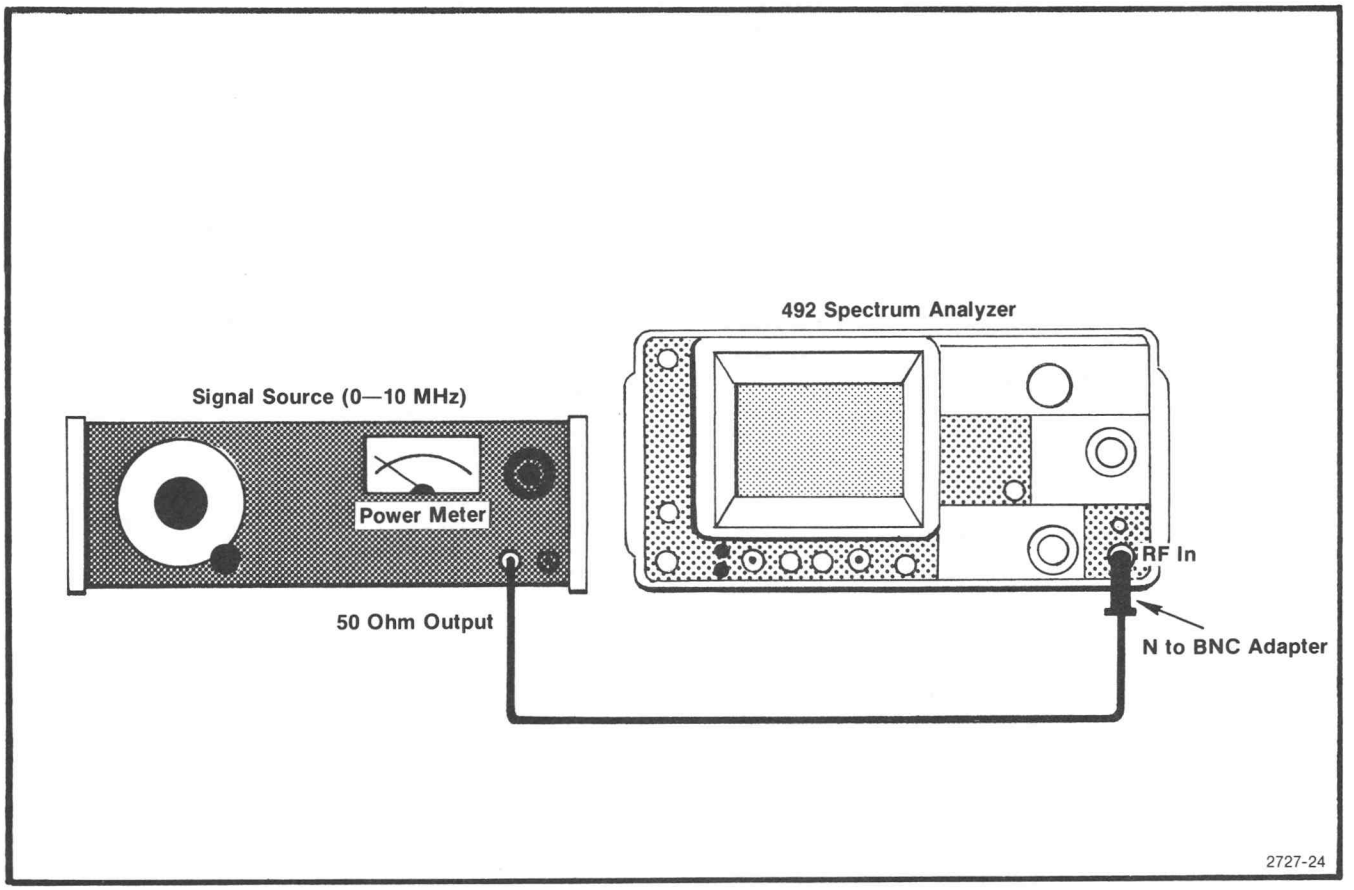

Fig. 3-4. Test equipment setup for checking the 0-10 MHz frequency response.

NOTE

If any part of the span is not within specification, tune to the center of the respective section and decrease the FREQ SPAN/DIV to display that portion. Decrease the sweep of the sweep oscillator accordingly and check flatness for the narrower portion. It may be necessary to tune the center frequency across the respective span in small increments, measuring response at each point to verify response flatness.

i. Increase the FREQUENCY RANGE to band 2 (1.7—5.5 GHz). Tune the FREQUENCY to approximately 2.0 GHz and set the FREQ SPAN/DIV to 100 MHz. For bands 2, 3, and 4 it is less confusing and easier to check frequency response in 1 GHz increments. Set the sweep generator start and stop range for 1.6 to 2.4 GHz and the 492 FREQUENCY to 2.0 GHz for the first check.

j. Check the frequency response for the 1.7 to 2.4 GHz portion of band 2. Amplitude deviation, from a mean average, must not exceed ±1.5 dB.

k. Replace the .01 to 2.4 GHz sweep source with a 2.0 to 18 GHz sweep oscillator and connect the test equipment as shown in Fig. 3-7. Switch the RF plug-in ALC to Mtr. Connect a coaxial cable between the Recorder Output of the power meter and the RF plug-in Ext ALC Input. Decrease the Power Level to approximately −6 dBm and adjust the Gain for stable operation (output stops oscillating).

l. Tune the 492 FREQUENCY to 3.0 GHz. Apply a cw marker of 3.0 GHz to the 492 input. Reestablish a signal amplitude of approximately half screen. Switch the Marker Sweeper on, then sweep the 2.5 to 3.5 GHz portion of band 2.

m. Check and note the frequency response of this portion. Increase the center FREQUENCY to 4.0 GHz and the sweep generator span range from 3.5 to 4.5 GHz. Check the next segment of the band 2 range.

n. Increase the sweep generator and 492 center FREQUENCY to the next 1 GHz segment and check frequency response for the upper portion of band 2.

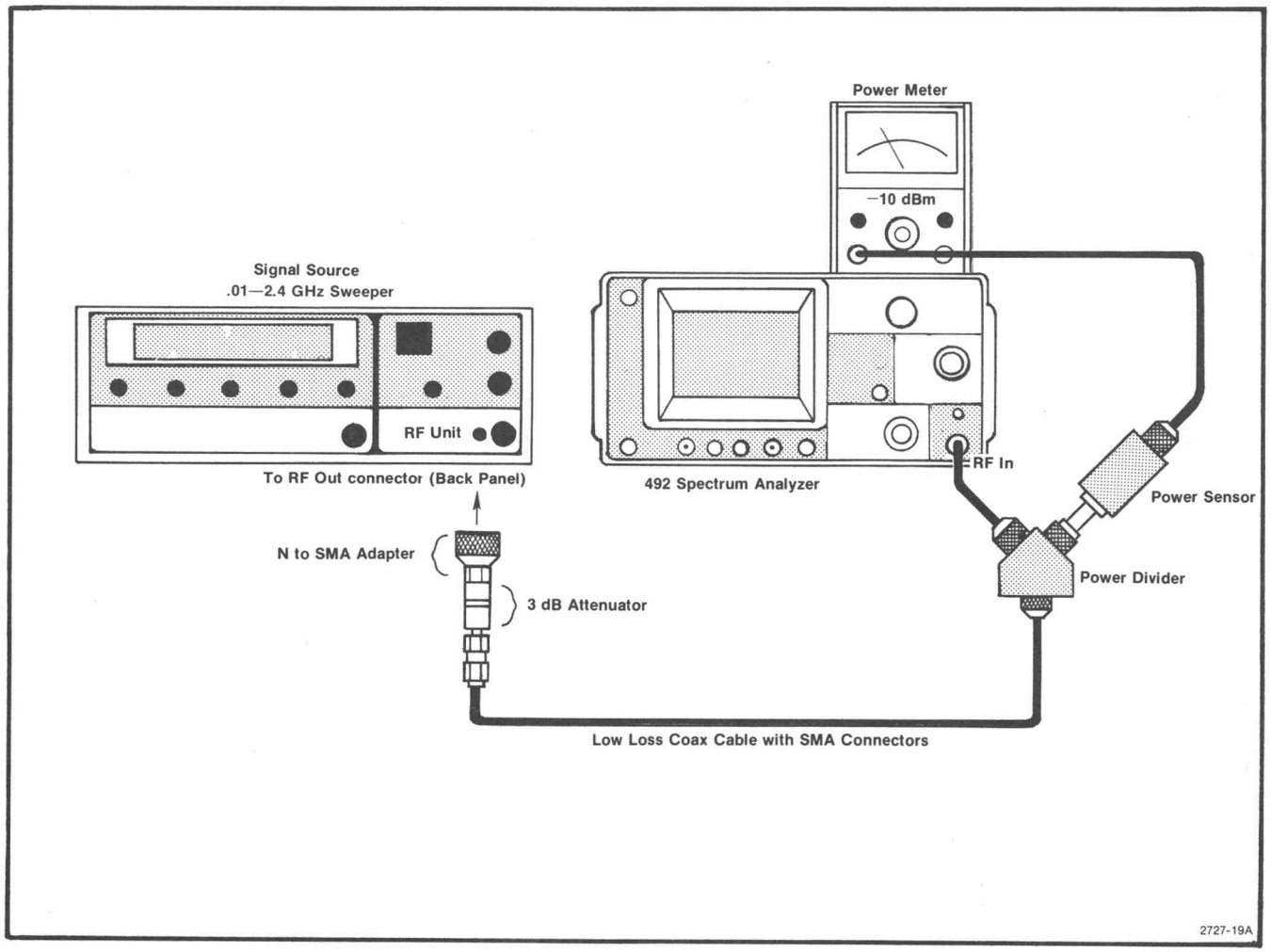

Fig. 3-5. Test equipment setup for measuring the .01-2.0 GHz frequency response.

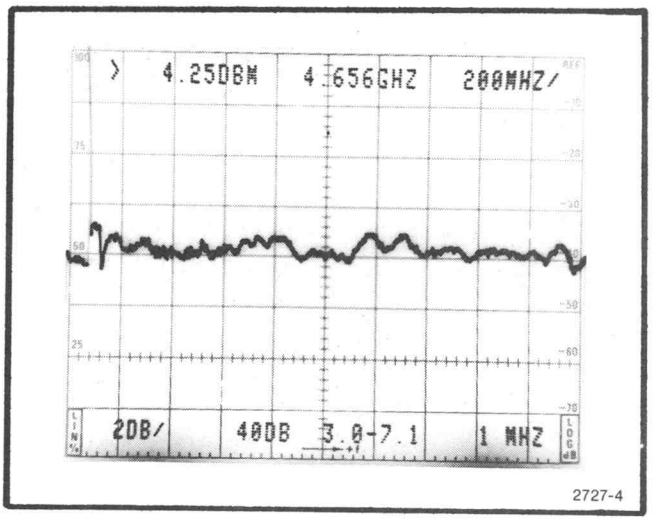

Fig. 3-6. Typical display showing frequency response from a sweeping signal source.

o. Return the 492 FREQUENCY RANGE to band 1 and the FREQ SPAN/DIV to 200 MHz.

p. Using the above procedure, check the frequency response of the upper portion of band 1. (Image response for band 1 is 4 GHz from the true signal; therefore, a wider span can be used without interference from the image.)

q. Switch the 492 FREQUENCY RANGE to band 3 (3.0 to 7.1 GHz). Tune the center FREQUENCY to 3.5 GHz and reduce the FREQ SPAN/DIV to 100 MHz. Set the sweep generator for a sweep output from 3.0 to 4.0 GHz.

r. Repeat the procedure, in 1 GHz increments, to check the frequency response for band 3 and the remaining bands to 21.0 GHz. Frequency response in band 4 (7.1—18 GHz) is ±2.5 dB and ±3.5 dB for band 5 (15—21.0 GHz).

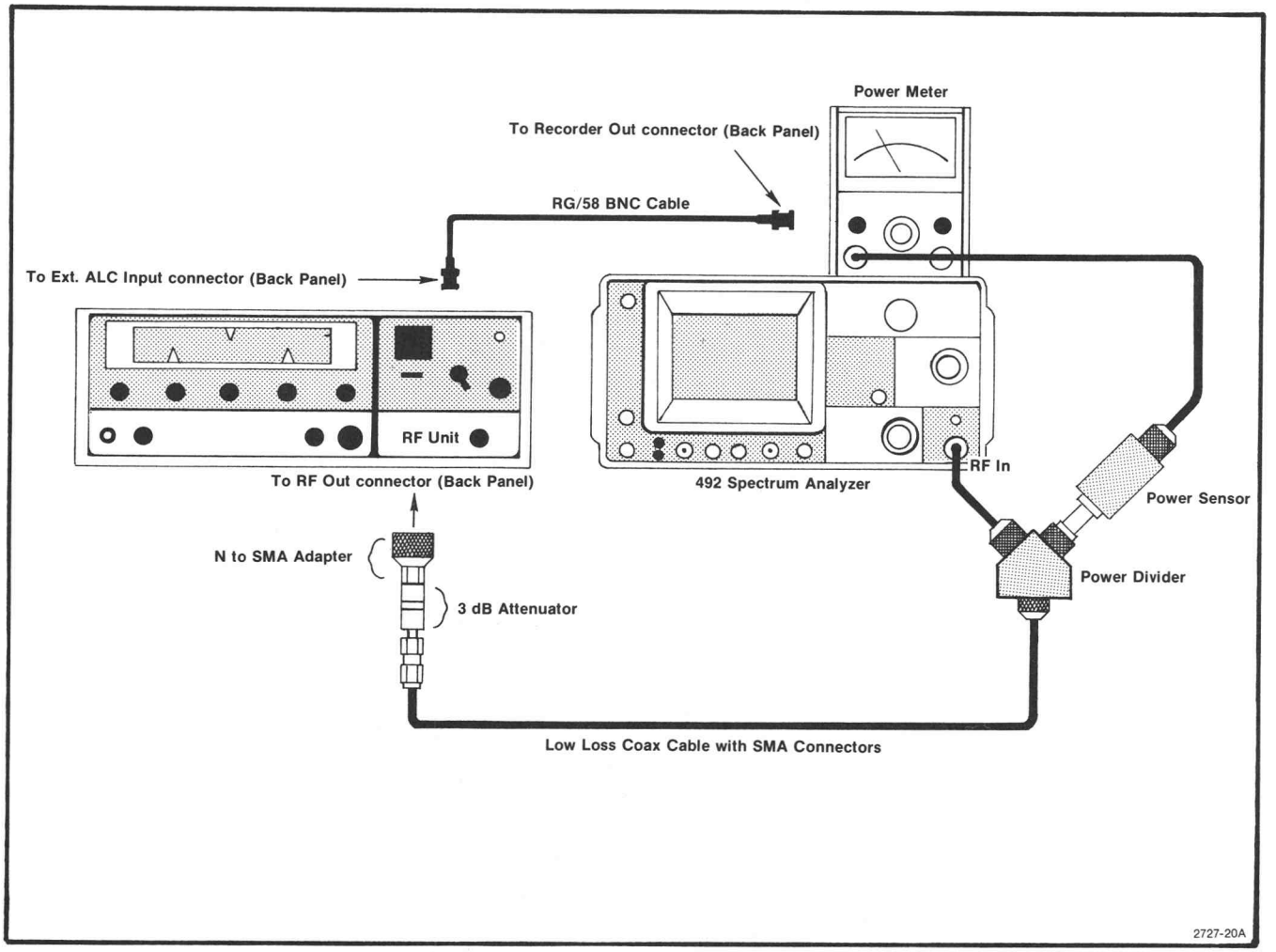

Fig. 3-7. Test equipment setup for measuring 2.0-18.0 GHz frequency response.

s. Procedure for checking frequency response, when using external mixers, is provided in the respective mixer instruction sheet.

Part 2

Procedure for Instruments with Digital Storage (Option 2)

The frequency response check for instruments with Digital Storage is the same as the procedure for Part 1 with the additional feature of a stored display. Activate VIEW B, SAVE A, and MAX HOLD. This will provide a stored display of the frequency response as the frequency range is swept. Between steps MAX HOLD must be de-activated and re-activated to clear storage for each sweep.

Part 3

Procedure for Instruments with Preselector (Option 1)

a. Test equipment setup is the same as the Part 1 procedure (Figs. 3-4 through 3-6). Set the front panel controls as follows:

FREQUENCY RANGE	Band 1 (0—1.8 GHz)
FREQUENCY	5 MHz
FREQ SPAN/DIV	1 MHz
MIN RF ATTEN	30 dB
REF LEVEL	0 dBm
AUTO RESOLUTION	On
TIME/DIV	20 ms
Vertical Display	10 dB/DIV

b. Apply the output of a constant level and calibrated 100 kHz to 10 MHz signal generator, to the RF INPUT of the 492. Set the generator frequency to 100 kHz and its output for about −10 dBm.

c. Adjust the REF LEVEL so the amplitude of the 100 kHz signal is about half screen, in the 2 dB/DIV mode.

d. Slowly tune the frequency of the signal generator from 100 kHz to 10 MHz, monitoring the output to ensure it remains constant. Note the frequency response (amplitude deviation above and below the average). Frequency response or amplitude deviation must not exceed ±1.5 dB. (See Fig. 3-6 for the average level.)

e. Replace the 100 kHz to 10 MHz signal source with a 0.01 to 2.4 GHz sweep oscillator and connect the test equipment as shown in Fig. 3-5. The output of the sweep generator is applied through a 3 dB attenuator and high performance coaxial cable to a power divider. Connect one output of the power divider directly to the RF INPUT and the other output to the sensor for the power meter.

f. Change the FREQ SPAN/DIV to 200 MHz and tune the FREQUENCY to approximately 1.0 GHz. On the sweep generator, select a 1 GHz cw marker and adjust the output for about −6 dBm reading on the power meter. With the 492 Vertical Display in the 2 dB/DIV mode, adjust the REF LEVEL so the signal amplitude is about half screen.

g. Change the sweep generator sweep mode to automatic internal sweep and set the sweep time to 100 seconds for its slowest sweep time.

h. Check the frequency response as the sweep generator scans across the 10 MHz to 2 GHz span. Deviation must not exceed ±1.5 dB. (See Fig. 3-6.)

i. Change the FREQUENCY RANGE to band 2 (1.7 to 5.5 GHz) and tune the FREQUENCY to about 2.0 GHz. Set the FREQ SPAN/DIV to 100 MHz, switch the sweep generator cw marker on and set it to 2.0 GHz. Adjust the 492 PEAKING control for maximum signal amplitude.

j. Return the sweep generator to its sweep mode and set the Start/Stop markers for 1.5 to 2.5 GHz. Sweep the 1.7 to 2.5 GHz span for band 2 and note the frequency response. Frequency response or deviation must not exceed ±2.5 dB.

NOTE

If any segment or portion of the span fails to meet the ±2.5 dB specification, tune the 492 FREQUENCY to the center of this portion, apply a cw marker at the center frequency and re-adjust the PEAKING for maximum response. Decrease the FREQ SPAN/DIV to display that portion and then recheck frequency response.

k. Replace the .01 to 2.4 GHz sweep source with a 2 to 18 GHz sweep oscillator. Connect the test equipment as shown in Fig. 3-7. Switch the RF plug-in ALC to Mtr position and connect a coaxial cable between the Recorder Output of the power meter and the Ext ALC Input of the plug-in unit. Decrease the Power Level to approximately −6 dBm; then adjust the Gain for stable operation (output stops oscillating).

l. Set the FREQ SPAN/DIV to 200 MHz and tune the FREQUENCY to 4.0 GHz. Repeat the PEAKING procedure with a 4.0 GHz marker and then sweep the upper portion of band 2 checking frequency response. If necessary, re-check those portions that do not meet specification after the PEAKING control has been adjusted for that frequency portion.

m. Increase the FREQUENCY RANGE to band 3 (3.0 to 7.1 GHz). Tune the center FREQUENCY to approximately 5.0 GHz. Apply a cw marker of 5.0 GHz so the PEAKING can be adjusted and then return the FREQ SPAN/DIV to MAX. Sweep the 3.0 to 7.1 GHz frequency range of band 3, checking frequency response. It may be necessary to check frequency response in smaller segments, with PEAKING adjusted for the shorter spans, if the response does not meet the ±2.5 dB specification.

n. Repeat the foregoing procedure to check the response of the remaining bands to 21 GHz. Frequency response for band 4 (5.4—18 GHz) is ±3.5 dB and ±5.0 dB for band 5 (15.0—21.0 GHz).

Part 4

Procedure for Instruments with Preselector and Digital Storage (Options 1 and 2)

The procedure is the same as the procedure in Part 3 with the additional feature of storage. Activate VIEW B, SAVE A, MAX HOLD and de-activate VIEW A. MAX HOLD must be re-activated for each sweep to update data stored for each sweep.

9. Check Preselector Ultimate Rejection (Option 1)

a. Apply a 3.5 GHz, −30 dBm, signal from a signal generator to the RF INPUT. Set the front panel controls as follows:

FREQUENCY RANGE	Band 2 (1.7—5.5 GHz)
FREQ SPAN/DIV	1 MHz
AUTO RESOLUTION	On
Vertical Display	10 dB/DIV
REF LEVEL	−30 dBm
MIN RF ATTEN	0 dB
TIME/DIV	AUTO
Digital Storage (Option 2)	VIEW A/VIEW B
Video Filter	WIDE

b. Tune the FREQUENCY to center the 3.5 GHz signal on screen and then reduce the FREQ SPAN/DIV to 10 kHz. Keep the signal centered on screen as the span is reduced. Adjust the signal generator output for a full screen display, adjusting PEAKING to maximize the signal amplitude.

c. Change the FREQUENCY to band 3 (3.0—7.1 GHz).

d. Increase the FREQ SPAN/DIV and check for any spurious response on the display. Any signal feedthrough must be down 70 dB or more from the level established in part b of this step. If this condition is not met, it is a good indication the YIG-tuned filter should be replaced.

10. Check Frequency Span/Div Accuracy (±5% of the selected span/div)

Span accuracy is checked by noting the displacement of calibrated markers from their respective graticule line over the center eight divisions of the screen. Range is in a 5-10-20 sequence and depends on the frequency band and option as shown in Table 3-3. The frequency span/div accuracy is checked for all FREQ SPAN/DIV settings on band 1 and at 500 MHz/Div on band 4.

Table 3-3

NARROW AND WIDE SPANS vs FREQUENCY BAND

Band	Narrow Span		Wide Span
	Standard	Option 3	All Instruments
1—3	10 kHz/Div	500 Hz/Div	200 MHz/Div
4—5	50 kHz/Div	500 Hz/Div	500 MHz/Div
6	50 kHz/Div	500 Hz/Div	1 GHz/Div
7—8	100 kHz/Div	500 Hz/Div	2 GHz/Div
9	200 kHz/Div	500 Hz/Div	2 GHz/Div
10	500 kHz/Div	500 Hz/Div	5 GHz/Div
11	500 kHz/Div	500 Hz/Div	10 GHz/Div

Accuracy: Within 5% of selected span/Div over center 8 divisions of display

a. Set the front panel controls as follows:

FREQUENCY RANGE	0—4.2 GHz (0—1.8 GHz Option 1)
RESOLUTION BANDWIDTH	1 MHz
FREQ SPAN/DIV	200 MHz
TIME/DIV	.1 s
Vertical Display	10 dB/DIV
REF LEVEL	−30 dBm
MIN RF ATTEN	0 dB
Digital Storage (Option 2)	VIEW A/VIEW B

b. Connect the CAL OUT to the RF INPUT and adjust the FREQUENCY to align the 100 MHz markers so the 200 MHz/div accuracy can be measured over the center eight divisions of the display (two markers per division). It may be necessary to change the REF LEVEL to obtain adequate markers. Maximum deviation must not exceed 10 MHz/div (0.25 minor divisions).

c. Change the FREQ SPAN/DIV to 100 MHz and check the span/div accuracy. Error must not exceed 5% of the span/div or 5 MHz/div.

d. Change the MIN RF ATTEN to 10 dB. Remove the CAL OUT signal to the RF INPUT and apply the microwave comb generator, as shown in Fig. 3-8. Change to band 4 (5.4 to 18 GHz) and switch the FREQ SPAN/DIV to 500 MHz. If the 492 has Option 1, adjust the PEAKING control for maximum marker amplitude. It may be necessary to adjust the FREQUENCY for best marker definition.

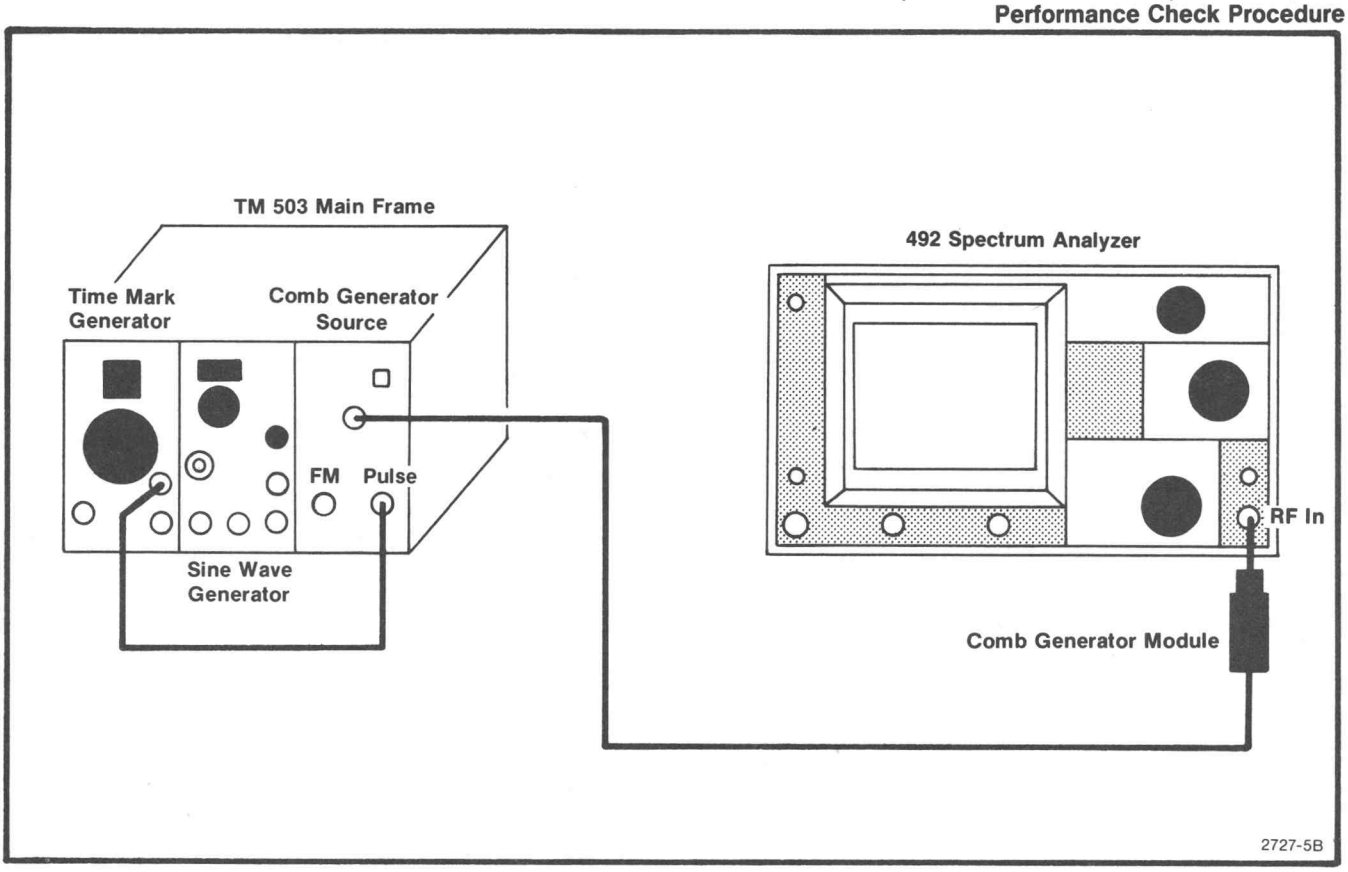

Fig. 3-8. Test equipment setup for checking span and timing accuracy.

e. Tune a marker to center screen then check the accuracy over the center eight divisions of the display. Deviation must not exceed 25 MHz/div.

f. The 1 GHz, 5 GHz, and 10 GHz SPAN/DIV selections on bands 6 through 11 cannot be checked, however their accuracy is directly related to the 100 MHz and 200 MHz selections.

g. Return the FREQUENCY RANGE to band 1 (0—4.2 GHz or 0—1.8 GHz Option 1). Re-establish a REF LEVEL of +20 dBm and tune the FREQUENCY to 500 MHz. Reduce the SPAN/DIV to 50 MHz and select a RESOLUTION BANDWIDTH of 1 MHz.

h. Remove the comb generator from the RF INPUT and connect the Marker Output of the time mark generator to the RF INPUT. Set the FREQ SPAN/DIV to 50 MHz, and apply 20 ns time markers to the 492 input.

i. Tune toward the lower frequency end of the band until 50 MHz markers are displayed over the center eight divisions (10 MHz markers will appear between each 50 MHz marker).

j. Check the accuracy of the 50 MHz/div span.

Table 3-4

SPAN/DIV vs TIME MARKERS

FREQUENCY SPAN/DIV	Time Mark Generator Marker Output
20 MHz	50 ns
10 MHz	.1 μs
5 MHz	.2 μs
2 MHz	.5 μs
1 MHz	1 μs
500 kHz	2 μs
200 kHz	5 μs
100 kHz	10 μs
50 kHz	20 μs
20 kHz	50 μs
10 kHz	.1 ms
5 kHz	.2 ms (Option 3)
2 kHz	.5 ms (Option 3)
1 kHz	1 ms (Option 3)
500 Hz	2 ms (Option 3)

k. Reduce the FREQ SPAN/DIV to 20 MHz and apply 50 ns (20 MHz) markers. Check the span/div accuracy.

l. Change the RESOLUTION BANDWIDTH to 10 kHz then repeat this procedure to check the FREQ SPAN/DIV accuracy from 10 MHz down to 1 MHz, using Table 3-4 as a guide to relate time markers to frequency span/div settings.

m. Remove the time mark generator signal and reconnect the comb generator to the RF INPUT. Modulate the 500 MHz comb generator with 2 μs (500 kHz) markers by applying the Marker Output to the Pulse Input of the comb generator. Change the REF LEVEL to −20 dBm and tune the FREQUENCY toward 500 MHz until 500 kHz markers are displayed over the center eight divisions of display.

n. Check the 500 kHz/div span accuracy.

o. Reduce the RESOLUTION BANDWIDTH to 1 kHz then reduce the FREQ SPAN/DIV setting and time marks (see Table 3-4) to check the accuracy for the remaining FREQ SPAN/DIV selections.

11. Check Time/Div Accuracy (accuracy within 5% of time selected)

a. Test equipment setup is the same as that required for Step 10.

b. Apply the Marker Output from the time mark generator directly to the RF INPUT and the Trigger output to the 492 EXT TRIG connector on the back panel. Set the controls as follows:

FREQUENCY	≈1 MHz
FREQ SPAN/DIV	100 kHz
RESOLUTION BANDWIDTH	10 kHz
REF LEVEL	−20 dBm
TIME/DIV	50 ms
Triggering	EXT
Min RF ATTEN	20 dB

c. Apply 50 ms time markers. Tune the FREQUENCY toward 0 Hz as the FREQ SPAN/DIV is reduced to zero, so time markers are displayed on the time domain display (see Fig. 3-9). Adjust FREQUENCY if necessary.

d. Use the horizontal position control to align a marker on the 1st graticule line; then check the displacement of markers from their respective positions over the center 8 divisions. Individual marker displacement must not exceed 5% or 2 minor divisions.

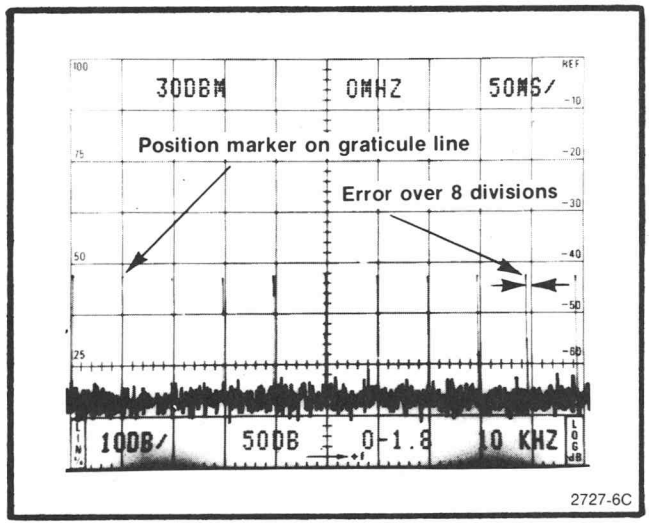

Fig. 3-9. Display to illustrate how timing accuracy is checked.

e. Check the accuracy of the 50 ms to 2 ms TIME/DIV settings by applying appropriate markers for each setting and note the displacement as described in part d of this step.

f. If the instrument has Digital Storage, de-activate the Digital Storage. Change the RESOLUTION BANDWIDTH to 1 MHz and adjust FREQUENCY for a satisfactory display of the time markers. Check the accuracy of the 1 ms and 20 μs TIME/DIV selections.

g. Remove the time mark generator output to the RF INPUT and EXT TRIG input of the 492. Connect the comb generator 500 MHz signal to the RF INPUT and modulate the comb generator with .1 s markers by applying the marker output from the time mark generator to the Pulse input of the comb generator.

h. Set the TIME/DIV to .1 s and activate INT Triggering. Change the FREQ SPAN/DIV to 50 MHz and adjust the FREQUENCY to center the 500 MHz comb signal. If the instrument has digital storage, activate VIEW A, VIEW B.

i. Change the REF LEVEL to −30 dBm then reduce the RESOLUTION BANDWIDTH to 1 kHz and the FREQ SPAN/DIV to 100 kHz while adjusting the FREQUENCY to optimize time markers on the display. Reduce the FREQ SPAN/DIV to zero.

j. Check the accuracy of the .1 s to 5 s sweep rates by applying appropriate markers to modulate the comb generator signal as the TIME/DIV selector is changed over this range.

12. Check Pulse Stretcher

a. Apply 1 ms time marks from the time mark generator to the RF INPUT of the 492. Set the TIME/DIV to 500 μs, RESOLUTION BANDWIDTH to 1 MHz, Vertical Display to 2 dB/DIV, and REFERENCE LEVEL to −10 dBm.

b. Tune the FREQUENCY to approximately 0 MHz so the amplitude of the markers is near full screen. If necessary change REF LEVEL. Digital Storage off, ZERO SPAN/DIV.

c. Activate PULSE STRETCHER and check that it extends the fall time of the markers.

13. Check Resolution Bandwidth and Shape Factor (bandwidth within 20% of that selected, shape factor 7.5:1 or less)

a. Apply the CAL OUT signal to the RF INPUT. Set the front panel controls as follows:

FREQUENCY RANGE	0—4.2 GHz (0—1.8 GHz, Option 1)
FREQUENCY	100 MHz
REF LEVEL	−20 dBm
Vertical Display	2 dB/DIV
FREQ SPAN/DIV	500 kHz
RESOLUTION BANDWIDTH	1 MHz
PEAK/AVERAGE	Fully cw
Digital Storage (Option 2)	VIEW A/VIEW B
TIME/DIV	AUTO
MIN NOISE	On

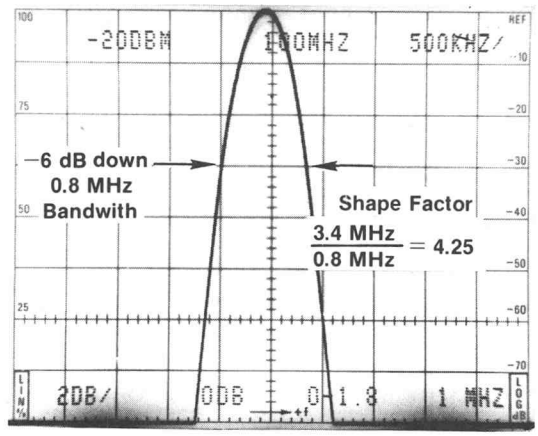

A. Measuring 6dB Bandwidth.

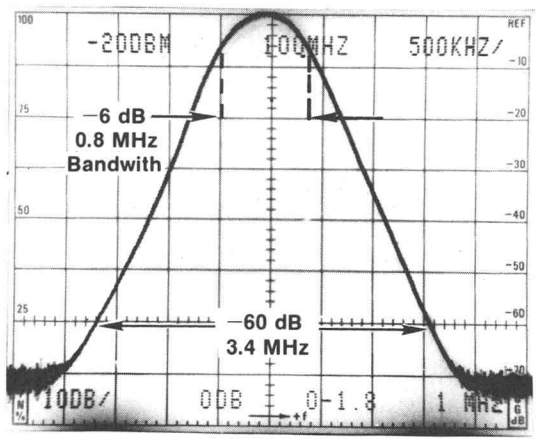

B. Measuring 60 dB down bandwidth to compute shape factor.

2726-1A

Fig. 3-10. Measuring resolution bandwidth and shape factor.

b. Adjust the FREQUENCY to center the calibrator signal on screen and measure the −6 dB bandwidth (see Fig. 3-10A). Bandwidth must equal 1 MHz ±200 kHz.

c. Change the Vertical Display mode to 10 dB/DIV.

d. Estimate the −60 dB bandwidth (see Fig. 3-10B). Calculate the shape factor (60/6 dB bandwidth ratio). Shape factor should equal 7.5:1 or less.

e. Switch the RESOLUTION BANDWIDTH to 100 kHz and the FREQ SPAN/DIV to 100 kHz. Check the bandwidth and shape factor of the 100 kHz filter by repeating the foregoing procedure.

f. Check the resolution bandwidth and shape factor for the remaining RESOLUTION BANDWIDTH selections. Decrease the FREQ SPAN/DIV as necessary to check each selection. Bandwidth must be within 20% of the bandwidth selected and the shape factor 7.5:1 or less.

g. De-activate MIN NOISE.

14. Check Sensitivity (Table 3-5 or Table 3-6)

NOTE

Sensitivity is specified according to the input or average noise level. The 492 calibrator is the reference used to calibrate the display.

a. Set the front panel controls as follows:

FREQUENCY RANGE	0—4.2 GHz (0—1.8 GHz, Option 1)
FREQUENCY	Within Band 1 (≈500 MHz)
Vertical Display	10 dB/DIV
MIN RF ATTEN	0 dB
REF LEVEL	−20 dBm
FREQ SPAN/DIV	10 kHz
RESOLUTION BANDWIDTH	1 MHz
Video Filter	WIDE
TIME/DIV	0.5 s
Digital Storage (Option 2)	VIEW A/VIEW B
PEAK/AVERAGE cursor	Top of screen (control fully cw)

b. Calibrate the reference level and display range as per Operating Instructions; then disconnect the calibrator signal from the RF INPUT. Change the REF LEVEL to −30 dBm.

c. Check the noise level below the −30 dBm reference level. Noise level must be −85 dBm or better (−80 dBm if your instrument has Option 1).

d. Check the noise level for 100 kHz and 10 kHz resolution bandwidths. Compare this level with characteristics listed in Table 3-5 or Table 3-6.

e. Change the REF LEVEL to −60 dBm and reduce TIME/DIV to 2 s.

f. Check the average noise level for 1 kHz resolution bandwidth against that listed in Table 3-5 or Table 3-6.

g. Repeat this procedure for the remaining coaxial input frequency range (100 kHz—21 GHz).

NOTE

On instruments without Digital Storage, it may be desirable with some RESOLUTION BANDWIDTH and REF LEVEL settings to activate the NARROW Video Filter. This procedure may be used to check sensitivity characteristics for optional external waveguide mixers if an accurate signal source has been used to establish the reference level.

Table 3-5

492 SENSITIVITY

Frequency Range	Average Noise Level dBm (Max)				
	Resolution Bandwidth				Option 3
	1 MHz	100 kHz	10 kHz	1 kHz	100 Hz
100 kHz—7.1 GHz (Bands 1—3)	−85	−95	−105	−115	−123
5.4—18.0 GHz (Band 4)	−70	−80	−90	−100	−108
15.0—21.0 GHz (Band 5)	−65	−75	−85	−95	−103
18.0—26.5 GHz (Band 6)[a]	−70	−80	−90	−100	−108
26.5—40.0 GHz (Band 7)[a]	−65	−75	−85	−95	−103
40.0—60 GHz (Band 8)[a]	−65	−75	−85	−95	−103
60—90 GHz (Band 9)	Depends on mixer				
90—140 GHz (Band 10)	Depends on mixer				
140—220 GHz (Band 11)	Depends on mixer				

[a]High performance Tektronix Waveguide mixers.

Table 3-6

492 (Option 1) SENSITIVITY

Frequency Range	Average Noise Level dBm (Max)				
	Resolution Bandwidth				Option 3
	1 MHz	100 kHz	10 kHz	1 kHz	100 Hz
100 kHz—7.1 GHz (Bands 1—3)	−80	−90	−100	−110	−118
5.4—12.0 GHz (Band 4)	−65	−75	−85	−95	−103
12.0—18 GHz (Band 4)	−60	−70	−80	−90	−98
15.0—21 GHz (Band 5)	—	—	—	−85	−93
18.0—26.5 GHz (Band 6)[a]	−70	−80	−90	−100	−108
26.5—40.0 GHz (Band 7)[a]	−65	−75	−85	−95	−103
40.0—60 GHz (Band 8)[a]	−65	−75	−85	−95	−103
60—90 GHz (Band 9)	Depends on mixer				
90—140 GHz (Band 10)	Depends on mixer				
140—220 GHz (Band 11)	Depends on mixer				

[a]High performance Tektronix Waveguide mixers.

15. Frequency Drift (within 200 kHz/hour without phase lock; within 25 kHz/hour with Option 3 phase lock)

NOTE

This measurement and residual FM are dependent on oscillator stability. Therefore, the instrument must have at least a two hour warm-up period and a re-stabilization time of at least 10 minutes per GHz of frequency change if the center frequency is retuned.

a. Select a Vertical Display of 10 dB/DIV, REF LEVEL −20 dBm, FREQUENCY RANGE 0—4.2 GHz (0—1.8 GHz Option 1), FREQ SPAN/DIV of 1 MHz, TIME/DIV at AUTO, and activate AUTO RESOLUTION.

b. Connect the CAL OUT signal to the RF INPUT. Tune one of the calibrator markers to center screen. Press the DEGAUSS button to remove any residual magnetism as the signal is centered and the FREQ SPAN/DIV is reduced to 2 MHz of 1 MHz. Allow 10 minutes or more of re-stabilization time for each GHz of frequency change before proceeding with this measurement.

c. Adjust REF LEVEL for signal amplitude of 7 divisions. Decrease the FREQ SPAN/DIV to 50 kHz keeping the signal centered as necessary with the FREQUENCY control.

d. If the instrument has Digital Storage (Option 2), activate VIEW A, VIEW B, and MAX HOLD.

e. Check the signal stability or drift over the specified time period. If the instrument has Digital Storage, drift will appear as the width of the response less the resolution bandwidth (see Fig. 3-11) after specified time period.

f. If the instrument has Phase Lock, activate PHASE LOCK and decrease the FREQ SPAN/DIV to 10 kHz.

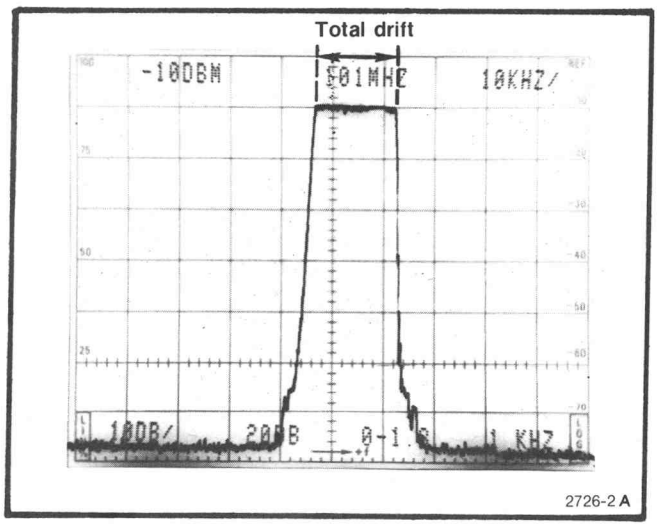

Fig. 3-11. Digital stored display showing drift.

g. Repeat parts d and e of this step to check stability.

16. Check Residual FM (within 1 kHz for 20 milliseconds without phase lock, and within 50 Hz for 20 milliseconds with Option 3 phase lock)

a. Set the FREQUENCY RANGE to Band 1 (0—7.1 GHz or 0—4.1 GHz Option 1). If the 492 has phase lock, cancel PHASE LOCK and center the calibrator signal with the FREQUENCY control. (Increase FREQ SPAN/DIV to locate signal if off screen, then return to 10 kHz/div.)

b. Set RESOLUTION BANDWIDTH to 10 kHz and the Vertical Display to LIN. Activate FINE and adjust REF LEVEL for a full screen display.

c. Position the marker signal with the FREQUENCY control so the slope (horizontal versus vertical excursion) of the response can be measured as illustrated in Fig. 3-12A. SINGLE SWEEP may be advantageous to freeze the display if the instrument has digital storage.

d. Switch FREQ SPAN/DIV to zero (time domain), TIME/DIV to 20 ms, and adjust FREQUENCY to position the display near center screen as shown in Fig. 3-12B. Note the peak-to-peak amplitude of the display within any horizontal division, scaling the vertical deflections according to the slope estimated in part c. Residual FM must not exceed 1 kHz for 20 ms.

e. If the instrument has phase lock, proceed as follows:

1. Switch TIME/DIV to AUTO and activate PHASE LOCK. Increase FREQ SPAN/DIV to bring the signal on screen, then reduce the span to 500 Hz/div and the RESOLUTION BANDWIDTH to 1 kHz. Keep the signal centered with the FREQUENCY control.

2. Calculate the slope as described in part c.

3. Switch to zero span and TIME/DIV to 20 ms/div; then measure residual FM using the same technique described above. Residual FM, for Option 3 instruments, must not exceed 50 Hz for a 20 ms period.

17. Check Intermodulation Distortion (third order is ⩾−70 dBc from any two on screen signals within any frequency span. Option 1, from 1.8 to 18 GHz, IM is ⩾−70 dBc within any frequency span, and from 1.7 to 1.8 GHz, IM is ⩾−70 dBc from any two −40 dBm signals within any frequency span)

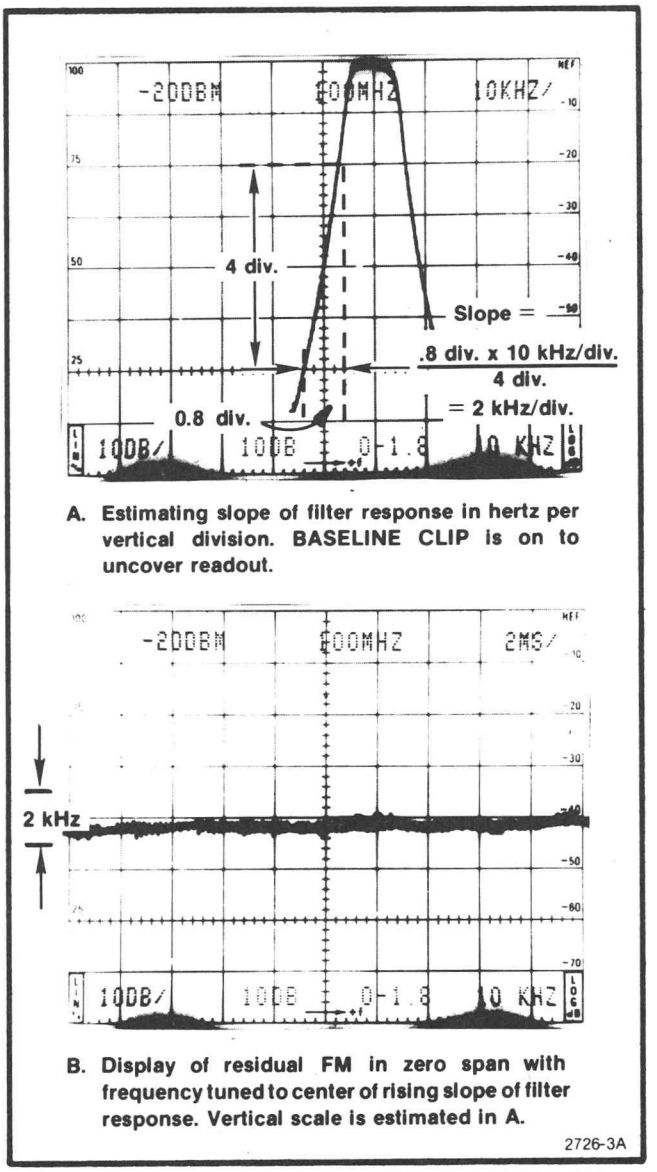

Fig. 3-12. Measuring residual (incidental) FM.

a. Set the front panel controls as follows:

Vertical Display	10 dB/DIV
FREQUENCY RANGE	Band 1
FREQ SPAN/DIV	5 MHz
RESOLUTION BANDWIDTH	100 kHz
TIME/DIV	AUTO
REF LEVEL	−30 dBm
MIN RF ATTEN	0 dB
MIN NOISE	Off
Digital Storage (Option 2)	VIEW A/VIEW B

b. Apply two signals from two 50 Ω sources, separated about 2 MHz and within the frequency range of band 1. Apply the signals through 20 dB attenuators (for isolation), a BNC "T" connector, and BNC-to-N adapter, to the 492 RF INPUT (test equipment setup is shown in Fig. 3-13).

c. Adjust the output of the signal generators for two −30 dBm, or full screen signals, on the 492 display. Decrease the signal frequency separation to 1 MHz and the FREQ SPAN/DIV to 500 kHz. Set the RESOLUTION BANDWIDTH to 10 kHz.

d. Check third order intermodulation products (see Fig. 3-14). Ensure that third order products are −70 dB or more down from the input signal level.

NOTE

Intermodulation products may not appear unless the input signal level is off screen. Use the VIDEO FILTER and very slow sweep rates to help resolve these sidebands.

e. Decrease signal separation and FREQ SPAN/DIV settings and check again for sidebands. Check IM distortion at other portions of the frequency range. IM distortion should be down at least 70 dBc.

f. If the instrument has Option 1, check IM distortion as follows:

1. Change the FREQUENCY RANGE to band 2 (1.8 GHz or higher), FREQ SPAN/DIV to 50 MHz, and RESOLUTION BANDWIDTH to 100 kHz. Apply two signals above 1.8 GHz. Establish a full screen reference level.

2. Reduce the FREQ SPAN/DIV and RESOLUTION BANDWIDTH so the noise floor is more than 70 dB down from the reference level. Check for IM products. Sidebands must be 70 dB or more below the signal level.

3. Change the frequencies of the signal generators to frequencies within the 1.6-to-1.8 GHz range and the level to −40 dBm.

4. Using the above procedure, measure IM distortion. IM products must be 70 dB or more down from the −40 dBm signal level.

18. Check Harmonic Distortion (−60 dBc or −100 dBc for Option 1, below level of a full screen signal in MIN DISTORTION mode)

a. Set the front panel controls as follows:

FREQUENCY RANGE	Band 1
FREQ SPAN/DIV	5 MHz
AUTO RESOLUTION	On
Vertical Display	10 dB/DIV
REF LEVEL	−30 dBm
MIN RF ATTEN	0 dB
Video Filter	WIDE
Digital Storage (Option 2)	VIEW A/VIEW B

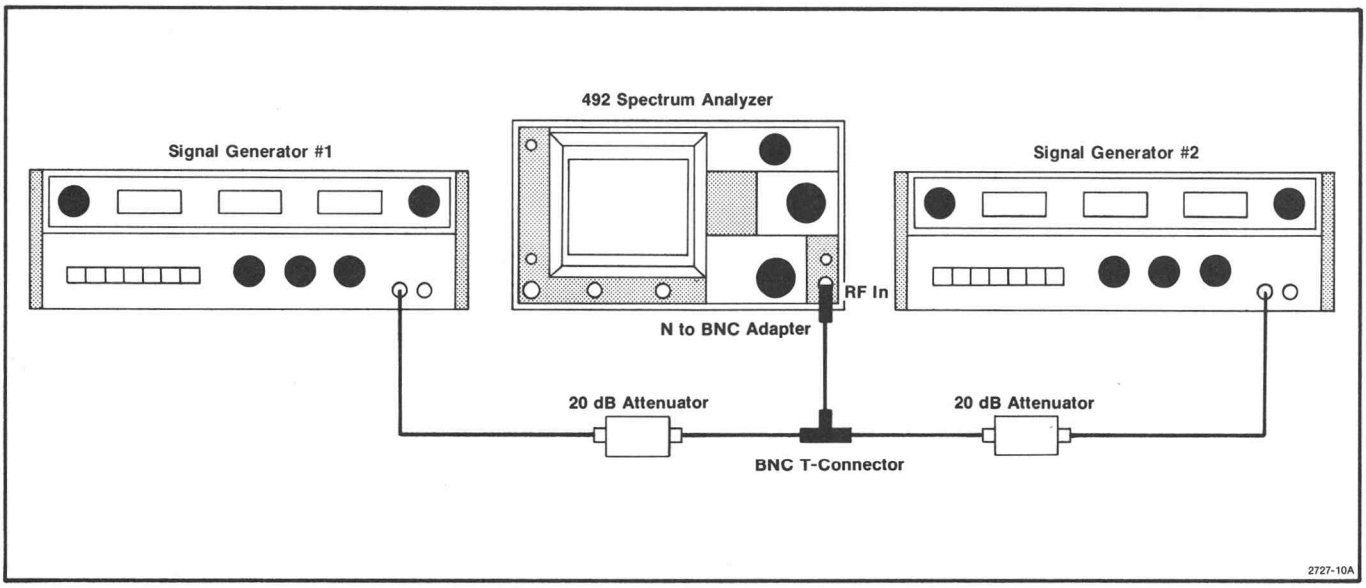

Fig. 3-13. Test equipment setup for measuring intermodulation distortion.

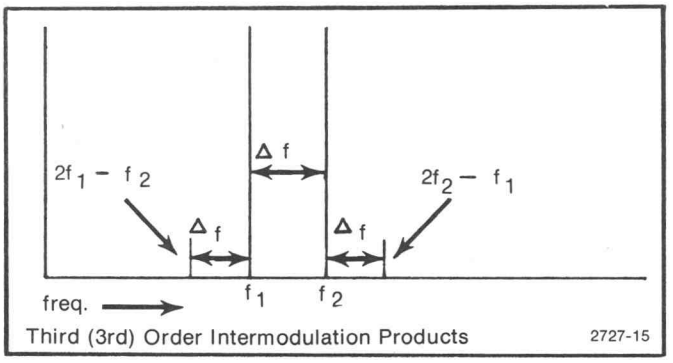

Fig. 3-14. Intermodulation products.

b. Apply the output of the signal generator, through a low-pass or bandpass filter (with a minimum of 40 dB rolloff to attenuate multiples of the generator frequency), to the 492 RF INPUT (see Fig. 3-15). Frequency of the signal generator depends on the frequency characteristics of the filter. Ensure that the REF LEVEL is in the MIN DISTORTION mode.

c. Tune the 492 FREQUENCY to the applied signal frequency. Adjust the generator output for a full screen (−30 dBm) signal.

d. Activate ΔF. Adjust the FREQUENCY so the 2nd multiple of the input frequency is centered. Increase the REF LEVEL to −50 dBm, decrease the FREQ SPAN/DIV to 500 kHz and the RESOLUTION BANDWIDTH to 10 kHz.

e. Check the display for harmonic spurii (spurious responses) of the input signal. Harmonic spurii must be down 60 dB or more from the −30 dBm carrier (−40 dB below top of screen).

f. Increase the FREQUENCY to the 3rd harmonic. Check for harmonic spurii. Again responses must be down 40 dB from the top of the screen (60 dBc).

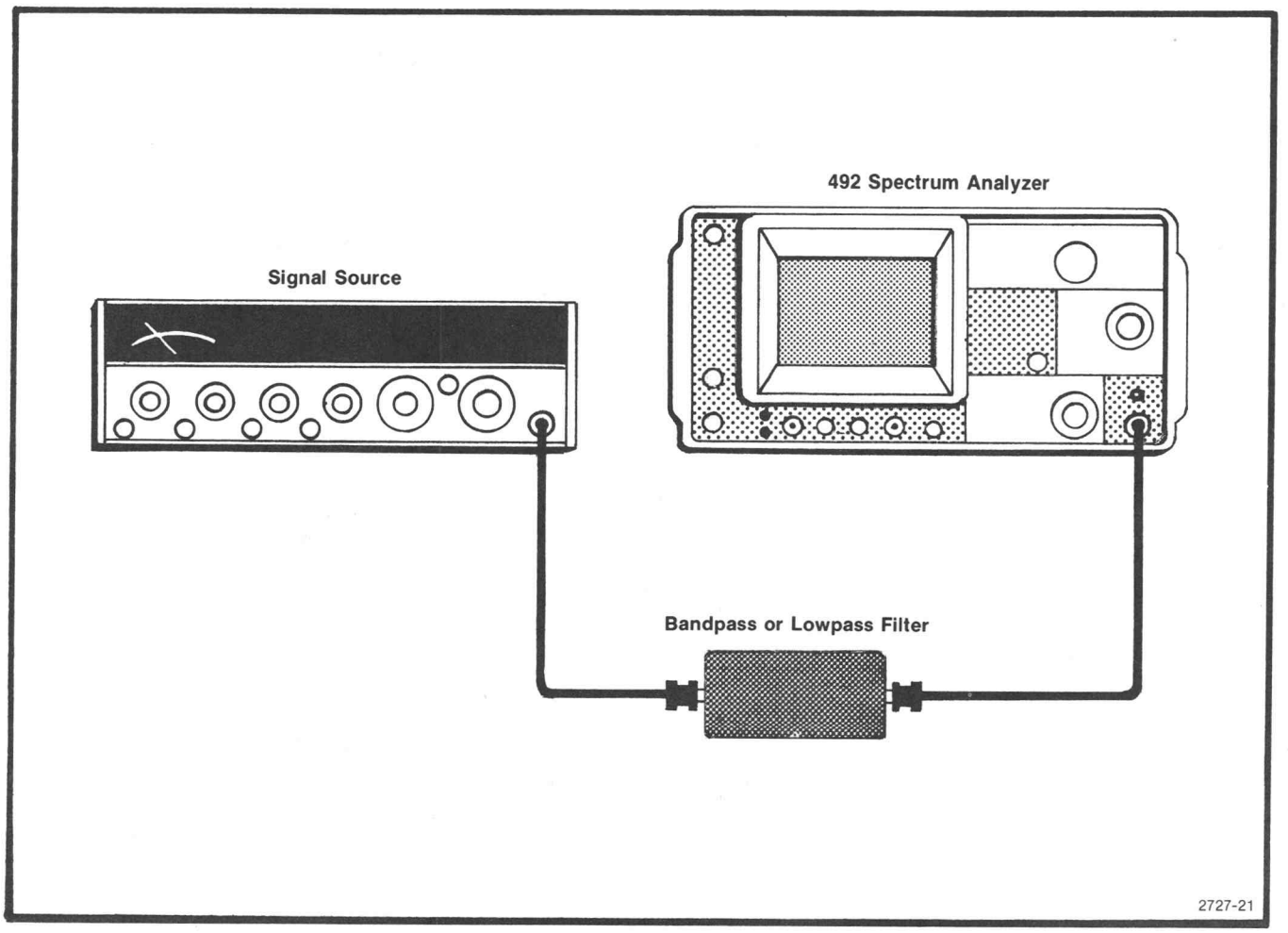

Fig. 3-15. Test equipment setup to check harmonic distortion.

g. If the instrument has Option 1 and Option 3, increase the REF LEVEL to −70 dBm, decrease the FREQ SPAN/DIV to 2 kHz and the RESOLUTION BANDWIDTH to 100 Hz. Deactivate the Video WIDE Filter. Check that harmonic spurii are 100 dB or more down from the −30 dBm carrier level.

19. Check Phase Lock Noise Sidebands, Option 3 only (70 dB or more down at 1 kHz resolution and 50 kHz away from a locked signal)

a. Set the front panel controls as follows:

Vertical Display	10 dB/DIV
FREQ SPAN/DIV	20 MHz
TIME/DIV	AUTO
REF LEVEL	−20 dBm
AUTO RESOLUTION	On
Digital Storage (Option 2)	VIEW A/VIEW B

b. Apply the CAL OUT to the RF INPUT. Center one of the markers on screen with the FREQUENCY control. Adjust the REF LEVEL for a full screen display.

c. Keep the calibrator marker centered as the FREQ SPAN/DIV is reduced to 50 kHz and the RESOLUTION BANDWIDTH is decreased to 1 kHz. Note that Phase lock is operative.

d. Increase REF LEVEL 20 dB to position the signal peak 20 dB above the reference line. Check the amplitude of noise sidebands 50 kHz away from the signal (Fig. 3-16). Phase lock noise sidebands should be 70 dB or more down from the signal level or 50 dB below the top of the screen.

20. Check Residual Response (≤−100 dBm)

a. Remove all signals to the RF INPUT and set the front panel controls as follows:

FREQUENCY	Bands 1—3 (100 kHz—7.1 GHz)
FREQ SPAN/DIV	10 MHz
REF LEVEL	−50 dBm
MIN RF ATTEN	0 dB
RESOLUTION BANDWIDTH	10 kHz
TIME/DIV	AUTO
Vertical Display	10 dB/DIV
Digital Storage (Option 2)	VIEW A/VIEW B

b. Scan the frequency range of bands 1, 2, or 3 in 100 MHz increments. Note the amplitude of any spurious response. Spurii amplitude must not exceed −100 dBm. (By activating ΔF after each increment, it is easier to determine 100 MHz increments.)

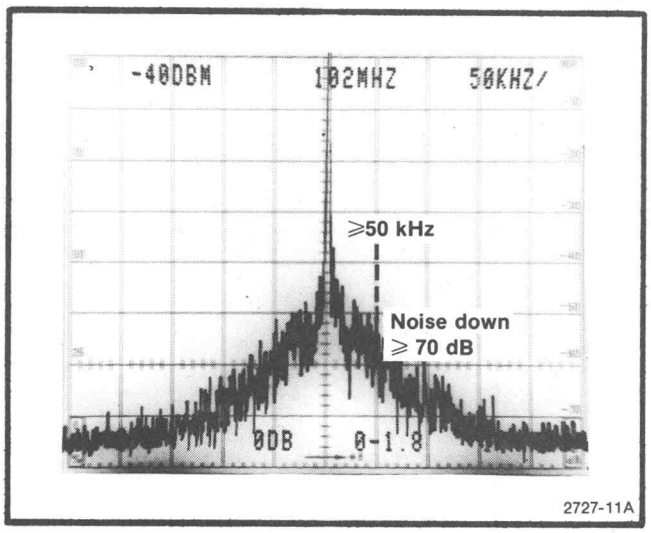

Fig. 3-16. Typical display of phase lock noise.

21. Check Lo Emission Out the RF INPUT (less than −10 dBm, or less than −70 dBm, for Option 1 instruments)

Two methods or procedures can be used to check EMI:

1. Connect a sensitive power meter (see equipment list) to the RF INPUT and directly measure tthe emitted signal level.

2. Use a high frequency spectrum analyzer with loop coupling probe to sniff or check around the front panel output ports for EMI radiation.

22. Check Digital Storage (Option 2)

a. Set the front panel controls as follows:

FREQUENCY	100 MHz
FREQ SPAN/DIV	10 MHz
RESOLUTION BANDWIDTH	1 MHz
Vertical Display	2 dB/DIV
REF LEVEL	−12 dBm
RF ATTEN	20 dB
Digital Storage (Option 2)	VIEW A

b. With the calibrator signal applied to the RF INPUT, tune the signal to center screen while reducing the FREQ SPAN/DIV to 200 kHz. Change the Vertical Display to 2 dB/DIV, then activate SAVE A.

c. Change the REF LEVEL to −10 dBm. Activate VIEW B. Display B should be 2 dB below display A.

d. Activate B—SAVE A. Check that B—SAVE A display is the algebraic difference between display B and Display A (see Fig. 3-17).

e. De-activate SAVE A and B—SAVE A.

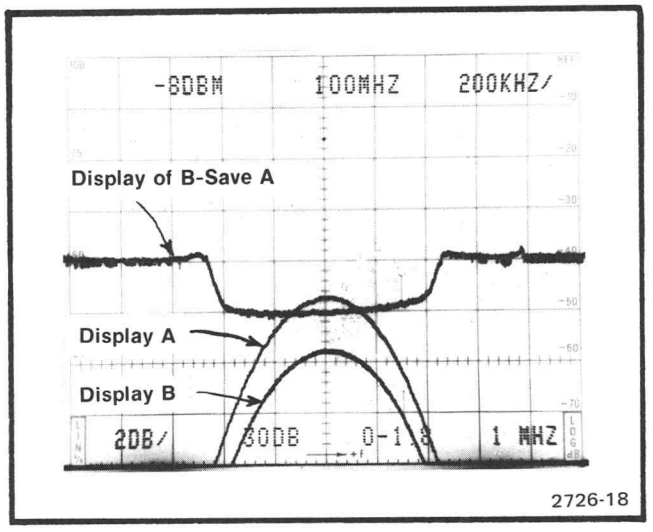

Fig. 3-17. Multiple exposure to illustrate how the differential between two signals can be measured.

23. Check Triggering Operation and Sensitivity (internal trigger sensitivity ≥1 division, external trigger ≥0.5 V, 15 Hz to 1 MHz)

a. Apply the output of a signal generator, modulated by a sine-wave generator, to the RF INPUT of the 492. Monitor the output of the sine-wave generator with a test oscilloscope (see Fig. 3-18).

b. Set the front panel controls as follows:

Vertical Display	LIN
FREQ SPAN/DIV	10 kHz
TIME/DIV	20 ms
RESOLUTION BANDWIDTH	1 MHz
REF LEVEL	−30 dBm
Digital Storage (Option 2)	VIEW A/VIEW B

c. Set the signal generator for a −30 dBm, 100 MHz signal and tune the 492 FREQUENCY to center the signal on screen.

d. Decrease the output of the signal generator so the display is half screen, then modulate the signal with a 1 kHz sine wave.

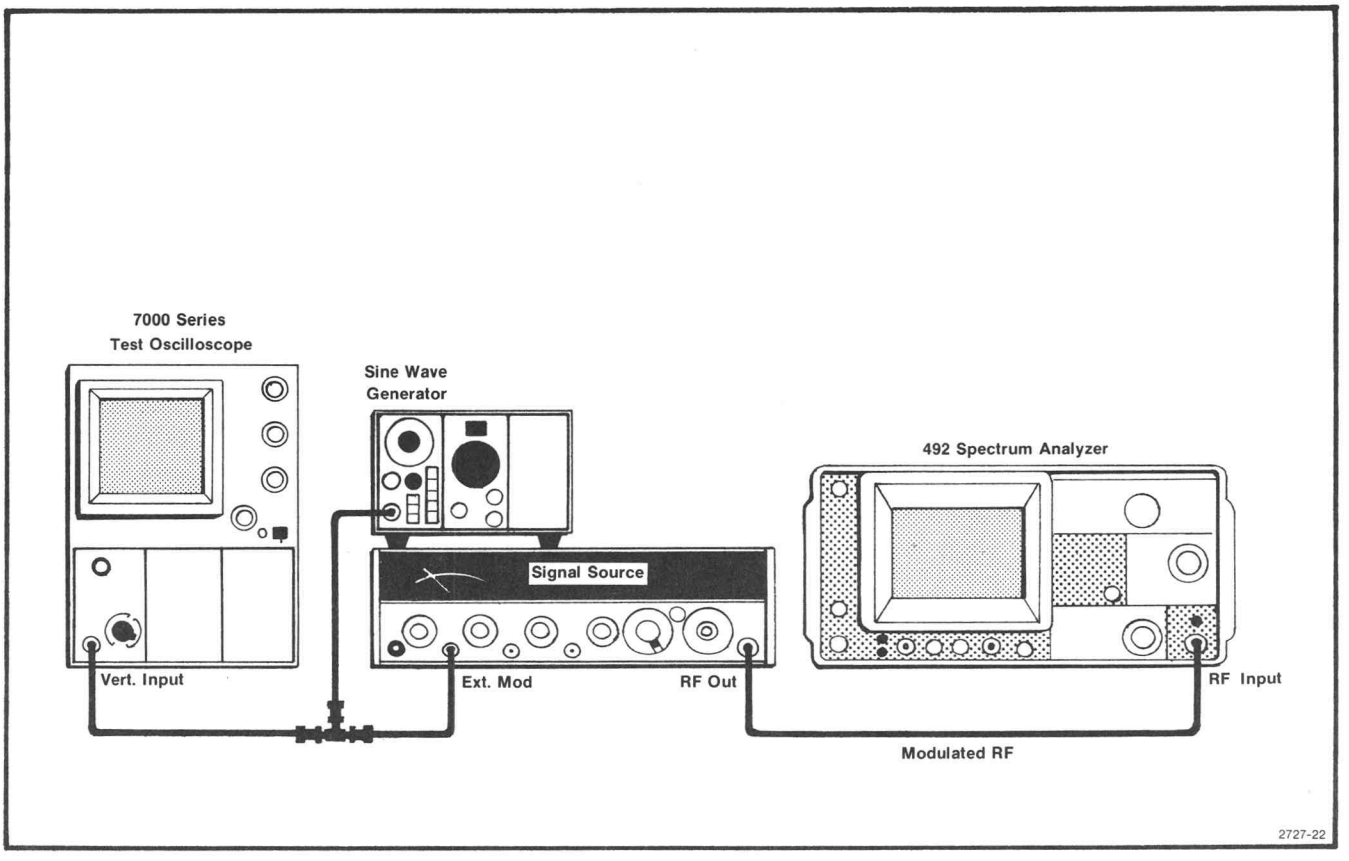

Fig. 3-18. Test equipment setup for checking triggering requirements.

e. Decrease the FREQ SPAN/DIV to 0. Adjust the FREQUENCY control if necessary to keep the signal centered.

f. Adjust the sine-wave generator output for a modulation amplitude of one division, then switch TRIGGERING to INT.

g. Check the internal trigger operation through the 15 Hz to 1 MHz frequency range.

NOTE

Because of deflection amplifier response the display amplitude will decrease at the high frequency end.

The triggering signal can also be applied, through a BNC-to-pin-jack cable, to pins 1 and 2 (see Fig. 3-25) of the rear panel ACCESSORIES connector (pin 2 is Video in, pin 1 Ext Video select).

h. Disconnect the test equipment. Apply, through a BNC "T" connector and coaxial cable, the sine-wave generator output to the EXT IN HORIZ/TRIG connector on the back panel of the 492 (see Fig. 3-19). Monitor the input signal amplitude with a test oscilloscope.

i. Set the sine-wave generator frequency to 1 kHz. Adjust its output level for 1 V peak-to-peak (0.5 V peak) as indicated on the test oscilloscope (see Fig. 3-20).

j. Change the 492 TIME/DIV to .2 s. Activate the EXT Triggering.

k. Check that sweep runs as the generator frequency is varied from 15 Hz to 1 MHz.

l. Return the TRIGGERING to FREE RUN and the input signal level to 0 volt.

24. Check External Sweep Operation (0 to 10 V ±1 V should provide a full sweep across the 10 division graticule span)

a. With the test equipment connected as directed for the previous step, change the TIME/DIV to EXT and deactivate VIEW A/VIEW B.

b. Change the Vertical Display to 2 dB/DIV and position the crt beam on the left graticule edge with the POSITION control. This establishes the 0 V reference.

c. Connect the output of the sine-wave generator, with a frequency of 1 kHz, to the back panel EXT IN connector. Increase the output for a full 10 division sweep.

d. Check the output peak-to-peak voltage level of the generator. Output should equal 20 V ±2 V peak-to-peak (10 V ±1 V peak).

NOTE

A variable voltage source can be used in lieu of the sine-wave generator to check external sweep operation.

e. Disconnect and remove the test equipment. Return TIME/DIV to AUTO.

25. Check Vertical Output (Provides 0.5 V ±5% of signal per division of display from the centerline)

a. Connect the VERT OUTPUT to the input of a dc-coupled test oscilloscope with a sensitivity of 1 V/DIV and sweep rate of 10 ms.

b. Set the 492 controls as follows:

FREQUENCY	100 MHz
Triggering	FREE RUN
TIME/DIV	AUTO
Vertical Display	2 dB/DIV
RESOLUTION BANDWIDTH	100 kHz
FREQ SPAN/DIV	100 kHz
REF LEVEL	−20 dBm
Digital Storage (Option 2)	Off

c. Apply the CAL OUT signal to the RF INPUT and tune the 100 MHz signal to center screen.

d. Activate the FINE step REF LEVEL function and adjust the REF LEVEL for an eight division display.

e. Check the vertical signal output level on the test oscilloscope. Output level should equal plus and minus 2 volts for a total of 4 volts ±0.2 volt (see Fig. 3-21).

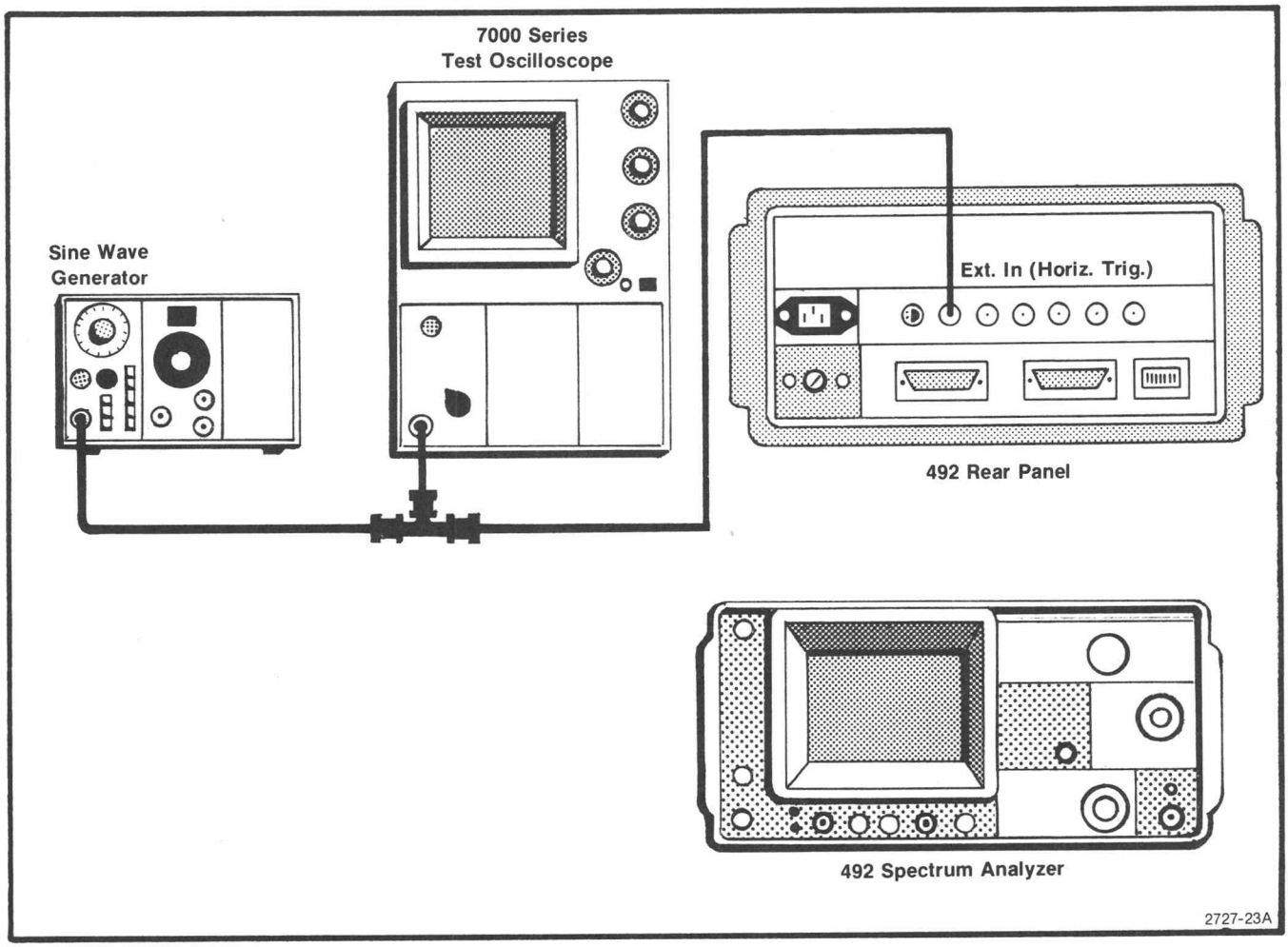

Fig. 3-19. Test equipment setup to check external triggering and horizontal input characteristics.

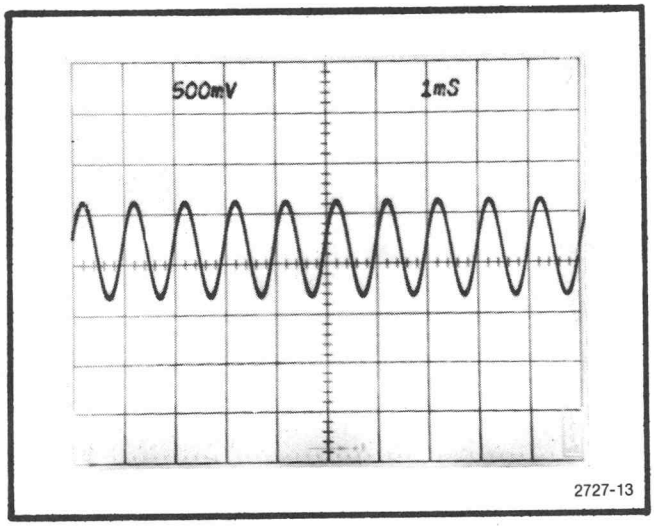

Fig. 3-20. Test oscilloscope display of a sinewave input signal to EXT TRIG connector (input 0.5 V peak or 1.0 V peak-to-peak).

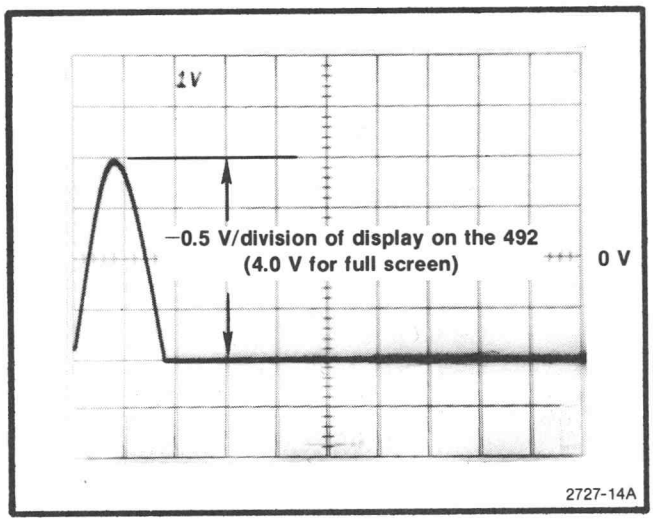

Fig. 3-21. Display of a full screen signal at the Vertical Output Connector.

26. Check Horizontal Signal Output (0.5 V ±5% either side of center screen with a full range of −2.5 V to +2.5 V ±10%)

a. Connect a dc-coupled test oscilloscope to the HORIZ OUTPUT connector. Set the 492 TIME/DIV to MNL position.

b. Adjust the crt beam five divisions either side of center screen with the MANUAL SCAN control. The output range should equal −2.5 V to +2.5 V ±10%.

c. Return the TIME/DIV to AUTO; disconnect and remove the test equipment.

This concludes the Performance Check part of the Calibration Procedure.

ADJUSTMENT PROCEDURE

If the 492 operation is out of tolerance for a particular specification, determine the cause, repair if necessary, then use the appropriate adjustment procedure to return the instrument operation to specification. After any adjustment, repeat that part of the Performance Check to verify operation.

Allow instrument to warm-up for at least 2 hours in ambient air of +20°C to +30°C before performing an adjustment.

Waveform illustrations used in these instructions may be idealized. They are not intended to be representative of specification tolerances.

Adjustment steps that interact are noted, and reference is made within the procedure to the affected circuit or steps.

CAUTION

STATIC DISCHARGE CAN DAMAGE MANY SEMICONDUCTOR COMPONENTS USED IN THIS INSTRUMENT.

Many semiconductor components, especially MOS types, can be damaged by static discharge. Damage may not be catastrophic, therefore, not immediately apparent. It usually appears as a "weakening" of the semiconductor characteristics. Devices that are particularly susceptible are: MOS, CMOS, JFETs, and high impedance operational amplifiers. Damage can be significantly reduced by observing the following precautions.

1. *Handle static-sensitive components or circuit assemblies at or on a static-free surface. Work station areas should contain a static-free bench cover or work plane such as conductive polyethylene sheeting and a grounding wrist strap. The work plane should be connected to earth ground.*
2. *All test equipment, accessories, and soldering tools should be connected to earth ground.*
3. *Minimize handling by keeping the components in their original containers until ready for use. Minimize the removal and installation of semiconductors from their circuit boards.*
4. *Hold the IC devices by their body rather than the terminals.*
5. *Use containers made of conductive material or filled with conductive material for storage and transportation. Avoid using ordinary plastic containers. Any static sensitive part or assembly (circuit board) that is to be returned to Tektronix, Inc., should be packaged in its original container or one with anti-static packaging material.*

Table 3-7

ADJUSTMENT STEPS FOR CALIBRATING THE 492

Adjustment Step	Page
1. Adjust and check low voltage supply	3-35
2. Adjust crt display	3-35
3. Adjust deflection amplifier gain and frequency response	3-38
4. Adjust sweep timing	3-40
5. Calibrate 1st LO system and center frequency control	3-41
6A. Check/Adjust the Cavity 2nd LO	3-45
6. Calibrate 2nd LO frequency and adjust tuning range	3-46
7. Adjust 1st converter bias	3-49
8. Baseline leveling	3-51
9. Log amplifier calibration	3-54
10. Calibrating resolution bandwidth and shape factor	3-56
11. Presetting the variable resolution gain and band leveling	3-59
12. Calibrator output level	3-60
13. IF gain calibration	3-60
14. Digital storage calibration	3-61
15. Setting B—SAVE A reference level	3-63
16. Band leveling for coaxial bands (1—5)	3-64
17. Band leveling for waveguide bands (6—11)	3-65
18. Preselector driver (Option 1) calibration	3-66
19. Phase lock calibration	3-68

Preparation

Remove the cabinet of the 492 as follows:

a. Set the 492 on its face or front panel.

b. Loosen the four screws through the back rubber feet.

c. Pull the cover up and off of the 492.

1. Adjust and Check Low Voltage Power Supply

a. Connect a Variac (line voltage regulator) in line with the 492 power input and set the Variac for 117 Vac.

b. Connect a digital voltmeter (DVM) to +15 V test point (Fig. 3-22B) on the Z Axis board to monitor the +15 V supply.

c. Remove the power supply cover screw located below the 10 MHz IF OUTPUT JACK on the rear panel (see Fig. 3-22A). This will provide access to the +15 V adjustment, R6028.

d. Insert a narrow bit screwdriver through the screw hole and engage adjustment R6028. Adjust for +15 volts on the DVM.

e. Vary the input voltage range from 90 to 132 Vac and note that the +15 V supply remains regulated.

f. Check the other supply voltages at test points indicated in Fig. 3-22B against tolerances listed in Table 3-8.

Table 3-8

POWER SUPPLY VOLTAGE TOLERANCES

Supply	Tolerance
+9 V	+9 V to +10 V
−5 V	−4.95 V to −5.05 V
−15 V	−14.90 V to −15.05 V
+5 V	+4.95 V to +5.05 V
+17 V	+17.0 V to +17.5 V
+100 V	+95 V to +105 V
+300 V	+295 V to +305 V

g. Remove the line voltage regulator (Variac) and reconnect the 492 directly to the power source.

2. CRT Display (Z Axis board)

a. Set the front panel controls as follows:

FREQ SPAN/DIV	MAX
AUTO RESOLUTION	On
TIME/DIV	5 ms
REF LEVEL	−50 dBm
Video Filter	NARROW
MIN RF ATTEN	0 dB
Vertical Display	10 dB/DIV
Digital Storage (Option 2)	Off

b. Adjust the REF LEVEL so the trace is mid-screen; then adjust Trace Rotation, R1021 (Fig. 3-23), so the trace aligns with the graticule line.

c. Change the REF LEVEL to −70 dBm and Vertical Display to 2 dB/DIV.

d. Alternately switch the Vertical Display between the 2 dB/DIV and 10 dB/DIV mode, increasing REF LEVEL to −80 dBm in the 10 dB/DIV mode, and adjust Geometry, R1051 (Fig. 3-23), for the straightest trace at the top and bottom of the screen.

If the 492 has Digital Storage, use the PEAK/AVERAGE cursor, positioned to the top and bottom as a reference, to adjust Geometry (R1051).

e. Change the FREQ SPAN/DIV to 200 MHz and activate 2 dB/DIV mode; then adjust Focus, R3033 (High Voltage module see Fig. 3-23), to defocus the frequency dot. Adjust Astigmatism, R1058 (Fig. 3-23), for a round dot. Re-adjust Focus for the sharpest dot.

f. Using the crt readout characters, adjust Auto Focus Gain, R1063 (Fig. 3-23), for the best edge focus at low intensity and the Auto Focus Tracking, R1067 (Fig. 3-23), for best focus at high intensity.

g. Lift one end of R4036 (wire strap) in HV Module (Fig. 3-24). Connect digital voltmeter (DVM) to TP4028 (Fig. 3-24). Set TIME/DIV to MNL and adjust MANUAL SCAN fully ccw.

h. Turn INTENSITY control fully cw and adjust beam current with R1027 (Fig. 3-23) for 0.90 volt.

i. Reinstall lifted end of R4036 and disconnect DVM.

j. Turn INTENSITY down until trace is just discernible. Adjust R1030 (Fig. 3-23) so the readout characters are just discernible.

k. Check the trace and readout tracking as the INTENSITY is varied; brightness of both should track.

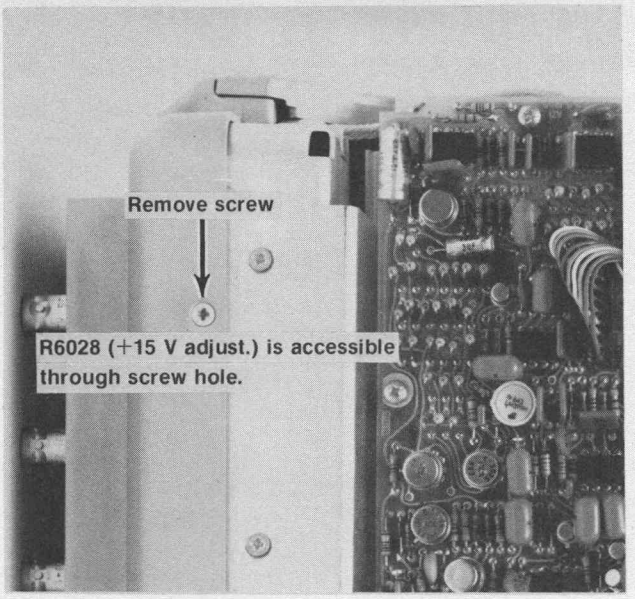

A. Location of +15 V adjustment.

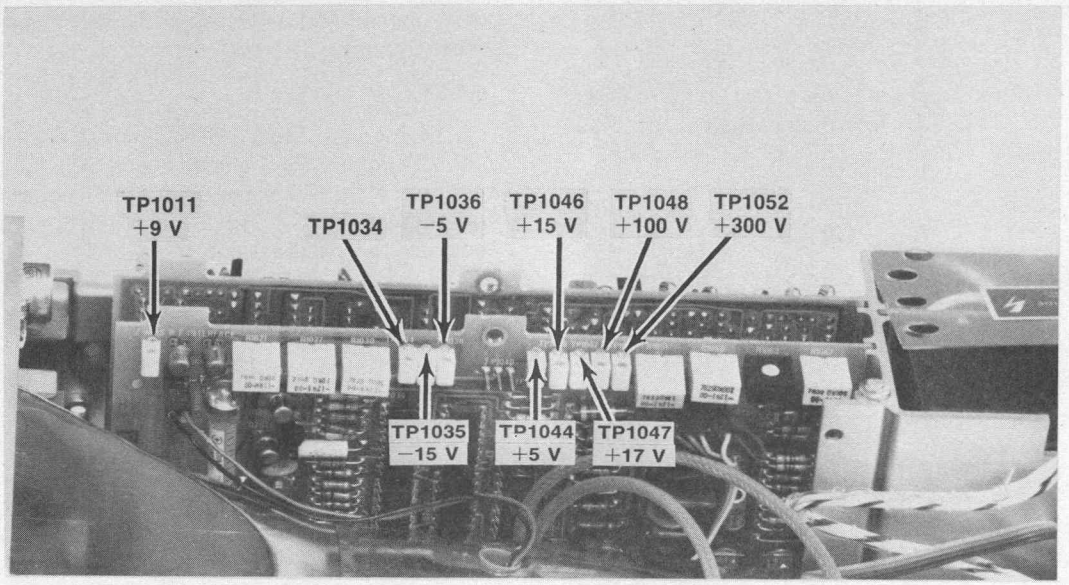

B. Voltage test points in Z-Axis circuit board.

2727-29A

Fig. 3-22. Low voltage power supply adjustments and test point locations.

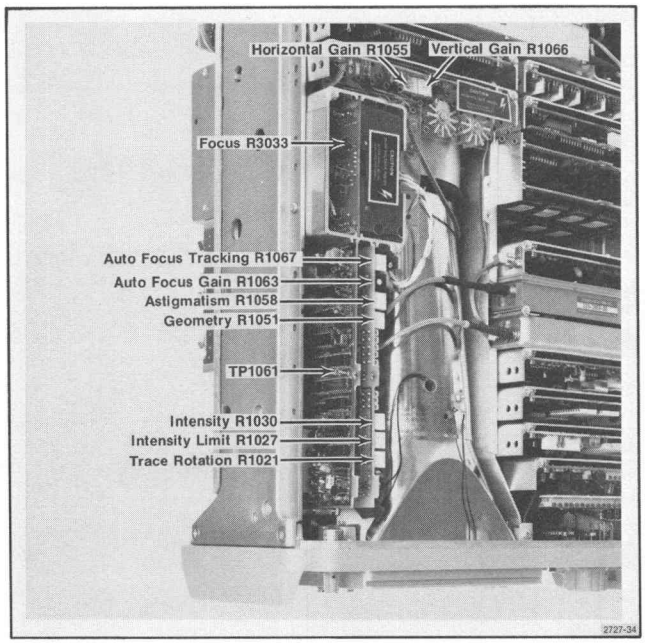

Fig. 3-23. Adjustments and test points on the deflection amplifier, High Voltage module, and Z Axis/RF Interface board.

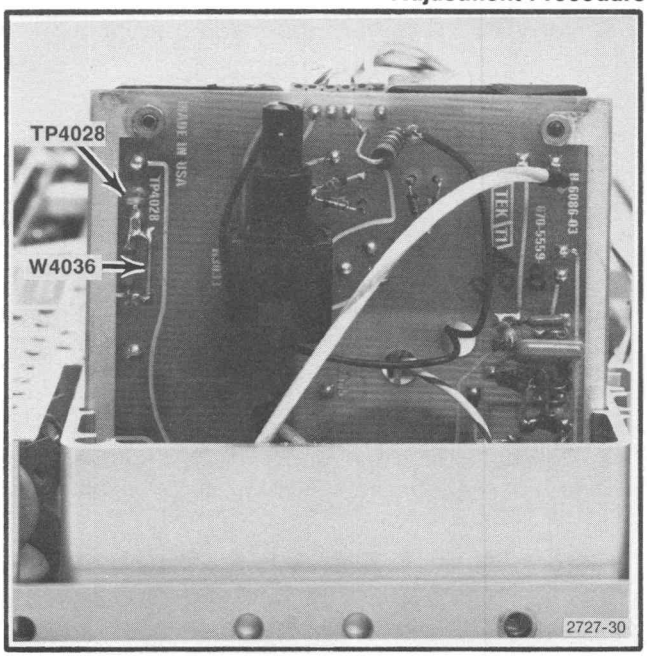

Fig. 3-24. Location of wire strap (W4036) on high voltage circuit board.

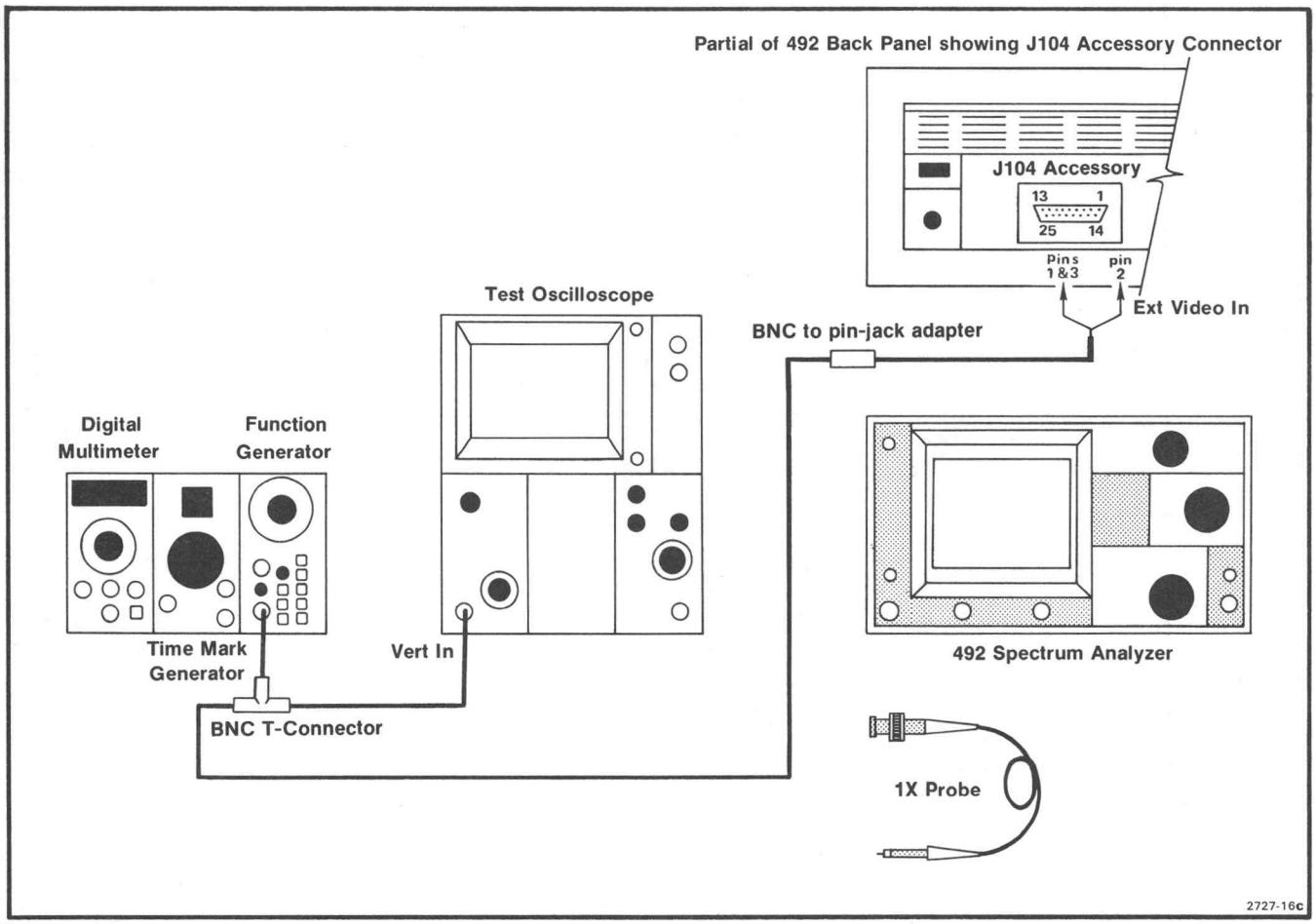

Fig. 3-25. Test equipment setup for calibrating the Deflection Amplifier.

3. Deflection Amplifier (gain and frequency response)

a. Test equipment setup is shown in Fig. 3-25. Set the TIME/DIV to 5 ms. Vertical Display to 2 dB/DIV, and switch Digital Storage off. Position the trace on the bottom graticule line.

b. Apply a 5 kHz, 0 to +4 V signal, from the sine-wave generator, through a BNC-to-pin-jack adapter, to the Ext Video input (pin 2) and Video Select (pin 1) of the ACCESSORIES jack (see Fig. 3-25).

c. Adjust Vert Gain, R1066 (Fig. 3-23), for a full screen display (0 to +4 V). Remove the 5 kHz signal from pin 2 of the ACCESSORIES jack.

d. Switch POWER off. Remove and install the Sweep board on an extender.

e. Switch POWER on; set TIME/DIV to MNL, and Vertical Display to 2 dB/DIV.

f. Connect a digital voltmeter (DVM) to TP1061 (Fig. 3-23) and adjust MANUAL SCAN for 0.0 volt at TP1061. Adjust horizontal Position to center MANUAL SCAN dot.

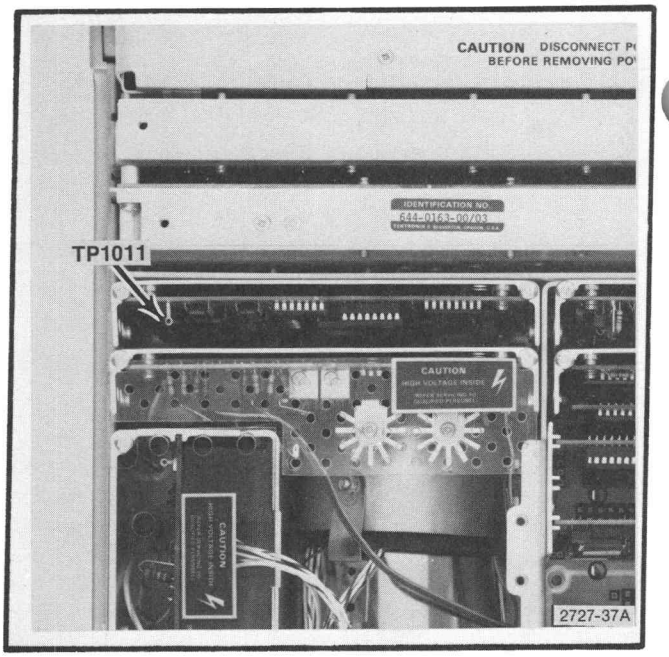

Fig. 3-26. Location of TP1101 on Crt Readout.

g. Adjust MANUAL SCAN for a reading of +5 volts at TP1061. Now adjust Horiz Gain, R1055 (Fig. 3-23), to position the crt beam to the right graticule edge (10th graticule line).

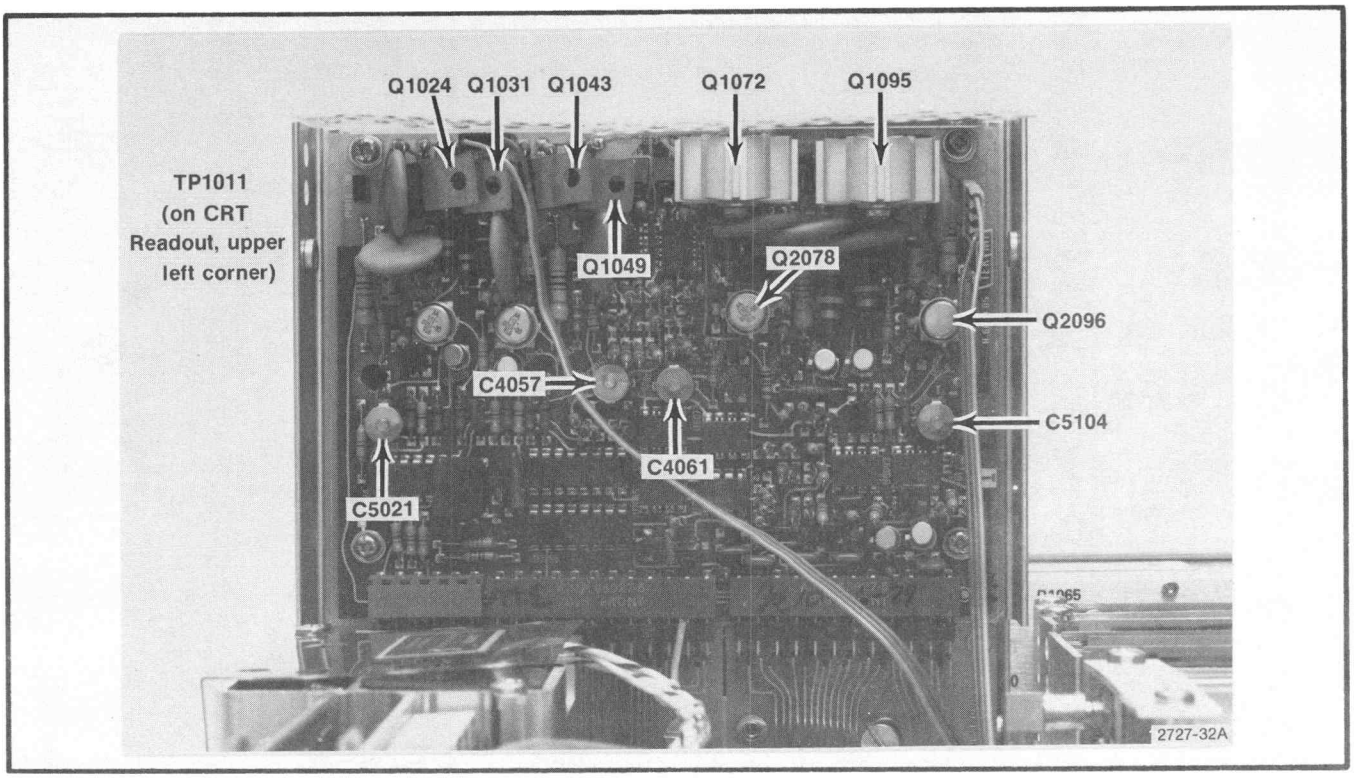

Fig. 3-27. Test points and adjustments on the Deflection Amplifier board for gain and frequency response calibration.

h. Adjust MANUAL SCAN so crt beam moves to the left edge of the graticule and check that the voltage at TP1061 is now approximately −5.0 volts.

i. Turn the POWER off, disconnect the DVM, and replace the Sweep board. Remove and install the Deflection Amplifier board on an extender.

j. Change the test oscilloscope to Ext Trigger. Apply the Readout Off signal at TP1011 (Fig. 3-26), in the upper left corner of the CRT readout board, to the test oscilloscope Ext Trigger input. Adjust the controls for a triggered sweep. Turn the 492 sweep off by activating SINGLE SWEEP, deactivate Digital Storage and ensure READOUT is on.

k. Connect the test oscilloscope probe to the collectors of Q1031 and Q1024. Adjust C5021 (Fig. 3-27) for the best frequency response (no overshoot or rolloff).

l. Connect the probe to the collectors of Q1043 and Q1049. Adjust C4057 (Fig. 3-27) for the best response.

m. Connect the probe to the collectors of Q1072, Q2078 (Fig. 3-27), and adjust C4061 for the best response.

n. Connect the probe to the collectors of Q1095, Q2096 (Fig. 3-27), and adjust C5104 for best response.

o. Remove the probe and Ext Trigger connection to TP1011.

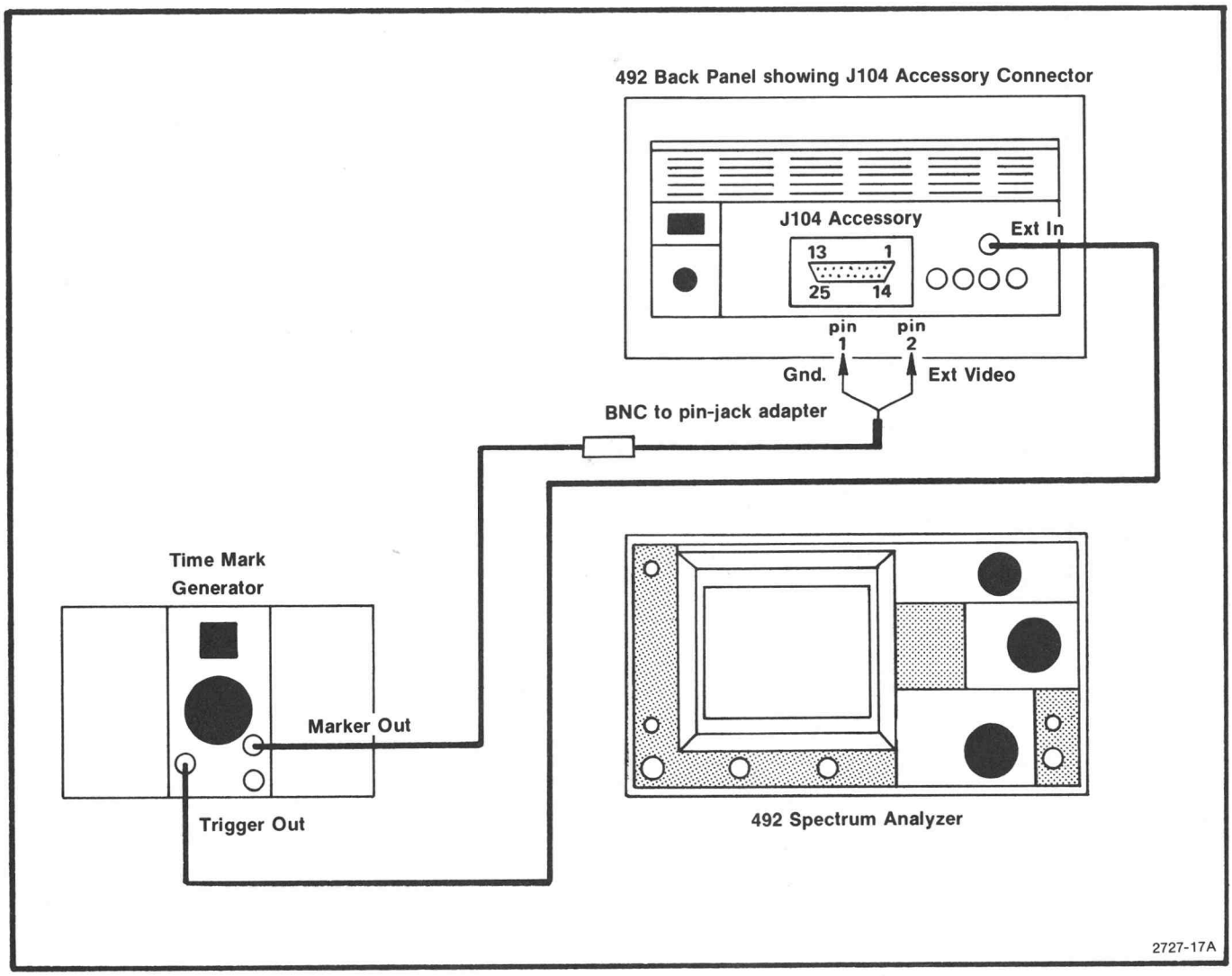

Fig. 3-28. Test equipment setup for calibrating sweep timing.

p. Check the appearance of "Z" in GHz of the frequency readout. If necessary, adjust C5104 and C4061 (vertical output) for the straightest top on the Z.

q. Set Vertical Display to LIN and adjust REF LEVEL for 100 μV/. Set TIME/DIV to MNL and adjust MANUAL SCAN fully clockwise.

r. Adjust C5021 and C4057 for best REF LEVEL readout (straight letters and numerals).

4. Adjust Sweep Timing

a. Turn the POWER off; remove and install the Sweep board on an extender, then switch the POWER on. Test equipment setup is shown in Fig. 3-28. Select EXT Triggering, TIME/DIV of 10 ms, and a FREQ SPAN/DIV of 10 MHz or less.

b. Apply 10 ms time marks from the time-mark generator to the EXT Video In (pin 2 and 1 of the ACCESSORIES jack, see Fig. 3-28) and the Trigger Output of the time-mark generator to the EXT TRIG input on the back panel of the 492. This should provide a display of 10 ms markers.

c. Adjust Sweep Timing, R5105 (see Fig. 3-29), for 1 marker/division. (Use POSITION adjustments to align markers.)

d. Check the remaining TIME/DIV selections for ±5% or less error over the center 8 divisions.

e. Set the TIME/DIV to AUTO, FREQ SPAN/DIV to MAX, and activate AUTO RESOLUTION.

f. Check the Time/Div versus Resolution Bandwidth as per Table 3-9 for the different FREQ SPAN/DIV settings.

g. Return Triggering to FREE RUN and remove the time-mark generator markers to the 492. Reposition the trace if moved in part c. Turn POWER off and remove the board extender. Replace the Sweep board in its Mother board location.

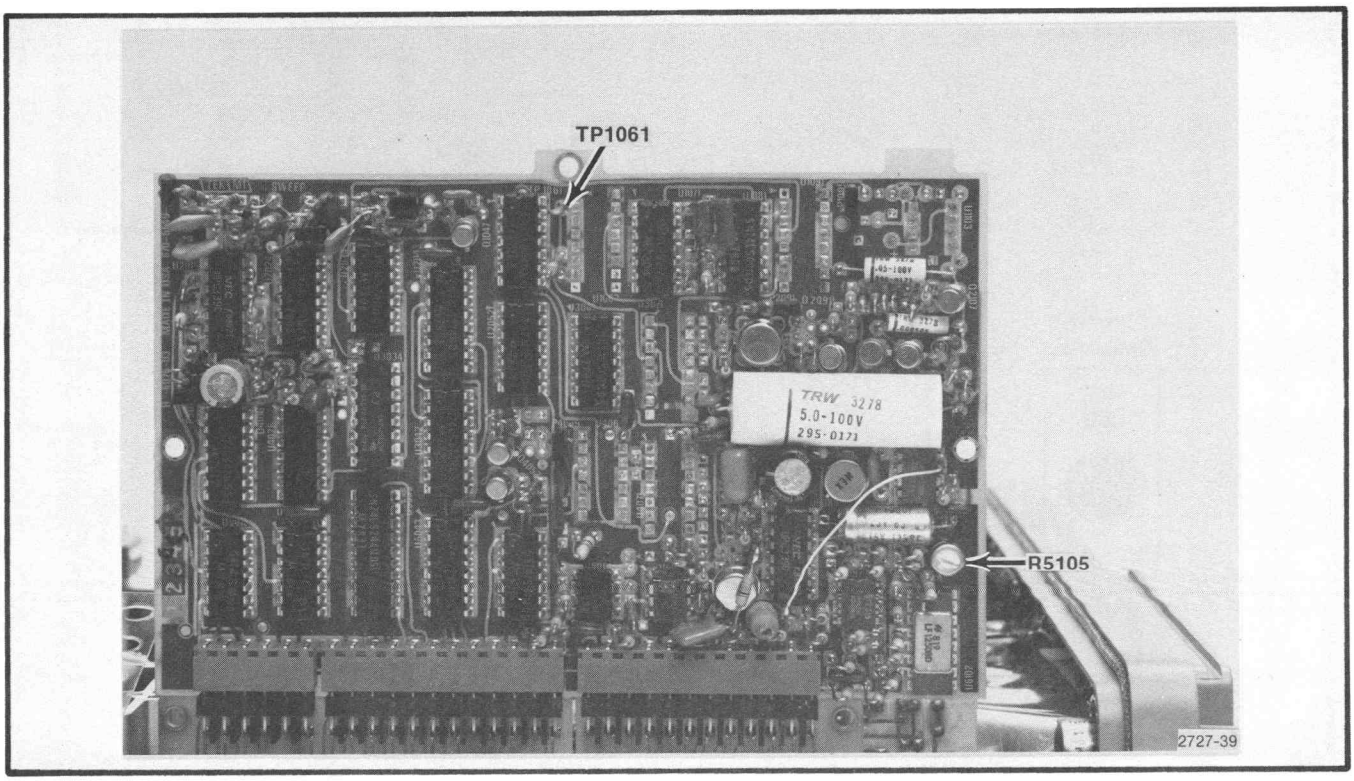

Fig. 3-29. Location of timing adjustment R5105 and TP1061 on sweep board.

Table 3-9

RESOLUTION AND SWEEP RATE
AS A FUNCTION OF SPAN IN THE AUTO MODE

FREQ SPAN/DIV	RESOLUTION	TIME/DIV
MAX	1 MHz	20 ms
200 MHz	1 MHz	10 ms
100 MHz	1 MHz	10 ms
50 MHz	1 MHz	10 ms
20 MHz	1 MHz	10 ms
10 MHz	1 MHz	10 ms
5 MHz	100 kHz	10 ms
2 MHz	100 kHz	10 ms
1 MHz	100 kHz	10 ms
500 kHz	100 kHz	10 ms
200 kHz	10 kHz	10 ms
100 kHz	10 kHz	10 ms
50 kHz	10 kHz	10 ms
20 kHz	10 kHz	10 ms
10 kHz	1 kHz	50 ms
OPTION 3 ONLY		
5 kHz	1 kHz	20 ns
2 kHz	1 kHz	10 ms
1 kHz	100 Hz	.5 s
500 Hz	100 Hz	1 s

5. Calibrate the 1st LO System and Center Frequency Control

This is a two part procedure. The first applies to 492 and 429P instruments with 1st LO Driver board 670-5551-03 and up. The second applies to 492 instruments with 1st LO Driver board 670-5551-00 through 670-5551-02. An alternate procedure for the 492P is also provided in part 1, using program control.

Before proceeding with this step, check sweep timing and amplitude accuracy.

a. Adjust Coarse Tune Range

PART 1

(1st LO Driver board 670-5551-03 and up)

1) Test equipment setup is shown in Fig. 3-30. Set the front panel controls as follows:

FREQUENCY RANGE	0-4.2 GHz (0-1.8 GHz Option 1 and activate EXTERNAL MIXER). If the 492 has Option 1 and Option 8 (External Mixer deleted), switch POWER off, remove Preselector Driver board, switch POWER on and select band 1.
FREQ SPAN/DIV	200 MHz
TIME/DIV	MNL
Triggering	FREE RUN
MANUAL SCAN	Midrange

2) Connect the digital voltmeter (DVM) set to the 200 V range between TP1058 of the 1st LO Driver and chassis ground (Fig. 3-31), so the voltage at the test point can be monitored. Adjust FREQUENCY for a readout of 0 MHz as the FREQ SPAN/DIV is reduced to 5 MHz. Note the DVM reading.

3) Tune the FREQUENCY for a readout of 4.278 GHz (switch FREQ SPAN/DIV to 200 MHz to facilitate tuning then reduce to 5 MHz and press DEGAUSS for the final adjustment).

4) Note the DVM reading.

5) If the differential between 0 MHz and 4.278 GHz is not 20.00 V, adjust Coarse Tune Range R1032, on the Center Frequency Control board (Fig. 3-31) until the difference between the two frequency points is 20.00 V.

PART 2

(1st LO Driver board 670-5551-00 through 670-5551-02)

1) Test equipment setup is shown in Fig. 3-30. Set the front panel controls as follows:

FREQUENCY RANGE	0-4.2 GHz (0-1.8 GHz Option 1 and activate EXTERNAL MIXER). If the 492 has Option 1 and Option 8 (Ext Mixer deleted), switch POWER off, remove Preselector Driver board, then switch POWER on, and select band 1.
FREQ SPAN/DIV	200 MHz
TIME/DIV	MNL
Triggering	FREE RUN
MANUAL SCAN	Midrange

2) Connect the digital voltmeter (DVM), set to the 200 V range, between TP1058 of the 1st LO Driver (Fig. 3-31) and chassis ground, so the voltage at the test point can be monitored; then adjust the FREQUENCY for a readout of 0 MHz. Reduce the FREQ SPAN/DIV to 5 MHz to obtain an accurate readout.

3) Note the DVM reading.

4) Tune the FREQUENCY to 4.278 GHz (switch the FREQ SPAN/DIV to 200 MHz to facilitate tuning, then reduce the span to 5 MHz and press DEGAUSS).

5) Note the DVM reading.

6) If the differential between 0 MHz and 4.278 GHz is not 20.00 V, adjust Coarse Tune Range R1032, on the Center Frequency Control board (Fig. 3-31), until the difference between the two frequency points is obtained.

b. Calibrate 10 V Supply

PART 1

(1st LO Driver board 670-5551-03 and up)

1) Connect the DVM to TP1059, on the 1st LO Driver (Fig. 3-31A).

2) Adjust R1034 (Fig. 3-31A for −10.00 V.

PART 2

(1st LO Driver board 670-5551-00 through 02)

1) Connect the DVM to TP1032, on the 1st LO Driver board (Fig. 3-31).

2) Adjust R1037 (Fig. 3-31) for −10.00 V.

c. Adjust Sweep Offset

(1st LO Driver boards 670-5551-00 through 03 and up)

1) Connect a shorting strap from TP1035, on the Span Attenuator board, to chassis ground (Fig. 3-31). Monitor the voltage on TP1073 (Fig. 3-31) with the DVM.

2) Adjust Sweep Offset R1063 for 0.00 V.

3) Remove shorting strap and switch EXTERNAL MIXER off.

d. Calibrate Frequency Span to Center Frequency Readout

PART 1

(1st LO Driver board 670-5551-03 and up)

1) Apply the Calibrator output to the RF INPUT. Set the FREQ SPAN/DIV to 100 MHz, activate FREQUENCY CAL, then set the readout calibration at the center of the CAL range (range is about ±15 MHz). Deactivate the FREQUENCY CAL function.

2) Initialize the front panel control settings by switching POWER off, then on. Set the FREQ SPAN/DIV to 200 MHz, TIME/DIV to AUTO, and REFERENCE LEVEL to −30 dBm (MIN RF ATTEN at 0 dB).

3) Adjust the FREQUENCY to tune the 18th marker of the Calibrator signal to the center of the screen, then reduce the FREQ SPAN/DIV to 2 MHz, activate DEGAUSS, and set the FREQUENCY readout to 1.800 GHz.

4) Adjust the 1st LO Offset R1032 (Fig. 3-31) on the 1st LO Driver board to center the 1.8 GHz marker.

5) Tune the FREQUENCY for a readout of 100 MHz (switch the SPAN/DIV to a higher setting to facilitate tuning then back to 2 MHz). Degauss by pressing DEGAUSS.

6) Adjust 1st LO Sensitivity R1031 (Fig. 3-31) on the 1st LO Driver board to center the 100 MHz marker.

7) Repeat these steps to correct for any interaction.

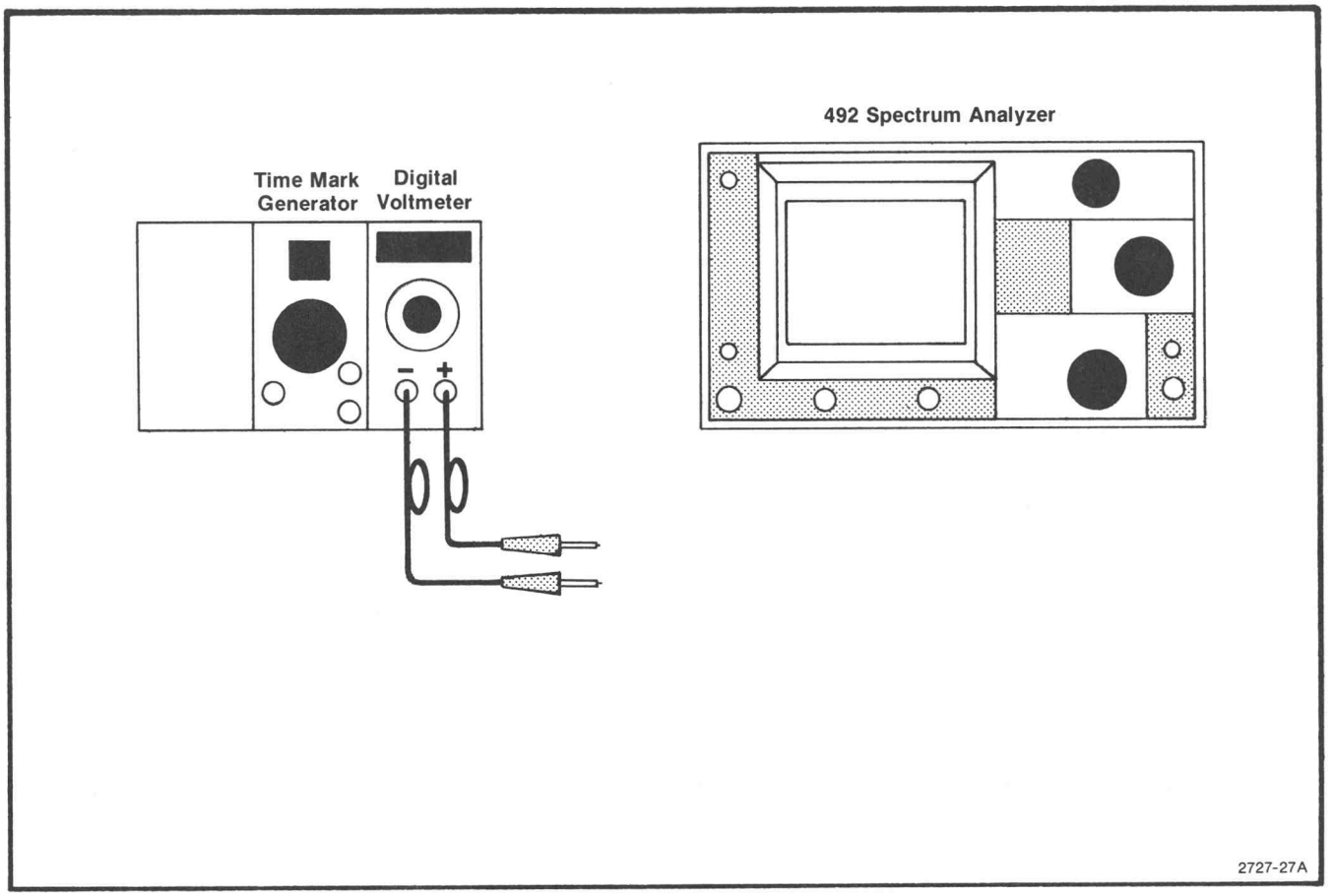

Fig. 3-30. Test equipment setup for calibrating sweep ramp for the 1st LO Driver.

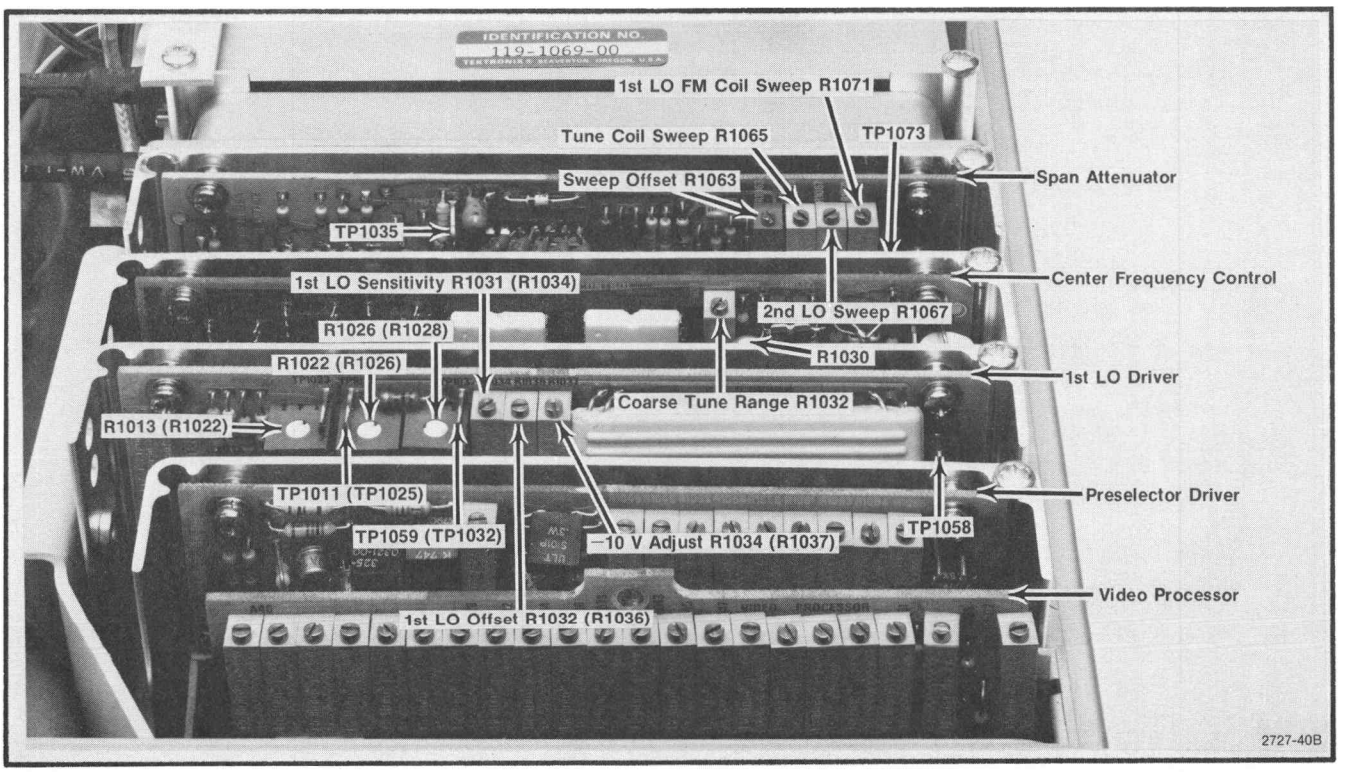

Fig. 3-31. 1st LO balance and span adjustments and test points. (Circuit numbers in parenthesis apply to earlier version boards.)

ALTERNATE PROCEDURE FOR 492P INSTRUMENTS

Instructions for the 405 program at the end of this step are given in parentheses.

1) Send:

"INIT;REF −20;SPAN 2M;SIG"
"FREQ 100M;DEG;SIG;WAIT;FREQ 1.8G; DEG; SIG; WAIT; REP 1200"

This will give an adjustment sequence for about two minutes. If necessary, re-send the command to complete the adjustment.

(Press USER key 3 to start the sequence and press the BREAK key to stop.)

2) If the adjustments are fairly close, two signals will appear on screen on alternate sweeps; a large and a small signal. The small signal is 1.8 GHz, the large at 100 MHz. Proceed with the following adjustments:

a) Adjust the 1st Lo Offset R1032 on the 1st LO Driver board, to bring the two signals to the same horizontal position.

b) Adjust 1st LO Sense R1031, on the 1st LO Driver board, to align the two signals with the vertical centerline of the graticule.

c) If one or no signals appear on screen, adjust R1031 until a signal comes on screen. Then adjust R1032 (1st LO Offset) while alternately adjusting the 1st LO Sense R1031 to keep the first signal on screen, until both signals are visible. Now proceed with the first two steps.

PART 2

(1st LO Driver boards 670-5551-00 through 02)

1) Apply the Calibrator output to the RF INPUT. Set the FREQ SPAN/DIV to 100 MHz, activate FREQUENCY CAL, then set the readout calibration at the center of the CAL range (range is about ±15 MHz). Deactivate the FREQUENCY CAL function.

2) Initialize the front panel control settings by switching POWER off, then on. Set the FREQ SPAN/DIV to 200 MHz, TIME/DIV to AUTO, and REFERENCE LEVEL to −30 dBm (MIN RF ATTEN at 0 dB).

3) Adjust the FREQUENCY to tune the 18th marker of the Calibrator to the center of the screen, then reduce the FREQ SPAN/DIV to 2 MHz, activate DEGAUSS, and set the FREQUENCY readout to 1.800 GHz.

4) Adjust the 1st LO Offset R1036 (Fig. 3-31) on the 1st LO Driver board to center the 1.8 GHz marker.

5) Tune the FREQUENCY for a readout of 100 MHz (switch the SPAN/DIV to a higher setting to facilitate tuning then back to 2 MHz). Degauss by pressing DEGAUSS.

6) Adjust 1st LO Sensitivity R1034 (Fig. 3-31) on the 1st LO Driver board to center the 100 MHz marker.

7) Repeat these steps to correct for any interaction.

e. Adjust 1st LO and 2nd LO Sweep

(Applicable to all 492 and 492P instruments)

1) With the Calibrator output applied to the RF INPUT, set the FREQ SPAN/DIV to 100 MHz and tune the FREQUENCY to about 500 MHz.

2) Adjust Tune Coil Swp R1065 (Fig. 3-31) on the Span Attenuator board so the 100 MHz harmonics of the Calibrator are spaced at one division intervals over the center eight divisions of the graticule. Adjust the FREQUENCY as necessary to align the markers.

3) Remove the Calibrator signal.

4) Set the FREQ SPAN/DIV to 2 MHz, REF LEVEL to +10 dBm, FREQUENCY about 15 MHz, then apply 0.5 μs markers from a time-mark generator to the RF INPUT.

5) Adjust the 1st LO FM Coil Swp R1071 (Fig. 3-31) for a 1 marker/division over the center eight divisions of the display.

6) Change the FREQ SPAN/DIV to 20 kHz, RESOLUTION BANDWIDTH to 1 kHz and apply 50 μs markers from the time-mark generator.

7) Adjust the 2nd LO Swp R1067 (Fig. 3-31) on the Span Attenuator board for 1 marker/division. Adjust FREQUENCY control as necessary to align markers.

8) Disconnect and remove the time-mark generator markers to the RF INPUT.

6A. Check/Adjust the Cavity 2nd LO

a. Set the FREQUENCY RANGE to band 1 and FREQ SPAN/DIV to MAX.

b. Connect a microwave frequency counter, such as Hewlett Packard 5342A, with a sensitivity of −20 dBm or better, to the 2nd LO OUTPUT connector.

c. Measure the 2nd LO frequency. Frequency should read 2182.0 MHz, ±0.5 MHz. Proceed with the next step if frequency is out of specifications.

d. Use a 5/16 inch open-end wrench and a 5/64 inch Allen wrench to loosen the lock nut and adjust the Fine Tune adjustment in the cavity for a counter reading of 2182.0 MHz.

CAUTION

Do not adjust the two slotted slugs. These are Varactor diode mounts.

e. Tighten the lock nut and recheck frequency to insure it is still within specifications.

6. Calibrate the 2nd LO Frequency and Tuning Range

This step is in two parts. The first applies to 492 and 492P instruments with Center Frequency Control board 670-5547-01 and up. The second applies to the 492 instruments with Center Frequency Control board 670-5547-00.

An alternate procedure is also provided to use over the GPIB bus of the 492P.

PART 1

(Center Frequency Control board 670-5547-01 and up)

a. Test equipment setup is shown in Fig. 3-30. Switch POWER off, remove the Center Frequency Control board, and install the board on an extender, then switch POWER on. Set the FREQUENCY to 5 MHz, FREQ SPAN/DIV to 100 kHz, REF LEVEL to 0 dBm and MIN RF ATTEN to 30 dB.

b. Apply 5 μs time markers to the RF INPUT and tune one of the marker signals to center screen.

c. Change the FREQ SPAN/DIV to 50 kHz then tune the FREQUENCY control counterclockwise until the display stops moving.

d. Note the location of a time marker near center screen then slowly turn the FREQUENCY control clockwise counting the number of markers that cross the noted location until the markers stop moving.

e. When properly adjusted, the tuning range of the 2nd LO should equal 4.5 MHz (22.5, 5 μs markers).

f. Adjust Fine Tune Range R4040, on the Center Frequency board (Fig. 3-33), to correct for one half the error and repeat the steps until the range is correct.

g. Adjust Identify Offset as follows:

1) Apply 1 μs markers to the RF INPUT and set the FREQ SPAN/DIV to 500 kHz.

2) Tune the FREQUENCY to 5 MHz then center one of the 1 μs markers on screen.

3) Activate the IDENTIFY 500 kHz/ONLY mode.

4) Adjust Coarse Tune Sensitivity R1042 (Fig. 3-33) on the Center Frequency Control board so the signal on alternate sweep aligns horizontally with the signal on even sweeps.

5) The Fine Tune Sensitivity adjustment R3040 should not be adjusted for the 492. If it has been distrubed, center the potentiometer in its range.

h. Switch POWER off, remove the extender board and re-install the Center Frequency Control board in the 492. Switch POWER on.

ALTERNATE PROCEDURE FOR 492P

NOTE

Instructions in parenthenses refers to the 4050-Series program as listed at the end of step 7. At the end of any programmed procedure press the RETURN TO LOCAL button.

a. Adjust the 1st LO Tune Sensitivity as follows:

1) Set the MIN RF ATTEN to 30 dB and apply 1 μs markers to the RF INPUT from the time mark generator. Set the FREQ SPAN/DIV to 500 kHz and adjust FREQUENCY to center the 10 MHz marker on screen.

2) Send "INIT;FREQ 10M;SPAN 100k" to the 492P over the GPIB bus.

3) Adjust the FREQUENCY control to center the marker on screen then send "TUNE 5M;SIG;WAIT; TUNE −5M;SIG;WAIT;RPT 1200". This will repeat the adjustment sequence for about 2 minutes. Send the instruction again if necessary to complete the adjustment. (Press USER DEFINABLE KEY #4, to start the sequence and press BREAK to stop the sequence.)

b. Adjust the Coarse Tune Sensitivity R1042 until the harmonics of alternate sweep are at the same horizontal position in the display as the regular sweep. It is not important where they are in the display, just so they are at the same horizontal location.

c. Adjust the 2nd LO Oscillator Range as follows:

1) Tune the FREQUENCY to about 10 MHz and center one of the 1 μs markers on screen.

2) Change the FREQ SPAN/DIV to 100 kHz.

3) Send: "TUNE 2M;WAIT;TUNE −2M; SIG; WAIT; REP 1200". This will repeat the adjustment sequence for about 2 minutes. Repeat the command if necessary. (Press USER DEFINABLE KEY #5 to start the sequence and BREAK to stop the sequence.)

d. Adjust Fine Tune Range R4040 until the harmonic signal in alternate sweep is at the same horizontal location on the display as the initial sweep. It is not important where in the display the two signals are as long as they are positioned together.

e. Adjust the 2nd LO Tune Sensitivity as follows:

1) Apply 0.5 ms markers to the RF INPUT, change the FREQ SPAN/DIV to 1 MHz, and tune FREQUENCY to about 0 MHz. Decrease the FREQ SPAN/DIV to 5 kHz and tune the zero spur to the left side of the display. Decrease the FREQ SPAN/DIV to 500 Hz.

2) Send: "TUNE 2K;SIG;WAIT;TUNE −2K; SIG; WAIT; REP 150". This will repeat the adjustment sequence for 5 minutes. Repeat the command if necessary. (Press USER DEFINABLE KEY #6 to start the sequence and press BREAK to stop the sequence.)

f. Adjust Fine Tune Sensitivity R3040 until the harmonics displayed in alternate sweep have the same horizontal location as the even sweep. Note: This may take some time because of the long sweep time and drift.

PART 2

(Center Frequency Control Board 670-5547-00)

a. Test equipment setup is shown in Fig. 3-32. Apply 10 ns and 0.1 μs markers from the time mark generators to the Input of the test spectrum analyzer (frequency range 2.0 GHz to 3.0 GHz). This should produce accurate frequency markers every 10 MHz around a center frequency of 2.2 GHz.

b. Tune the test spectrum analyzer to the 2180 MHz marker and reduce the Freq Span/Div to 1 MHz, keeping the 2180 MHz marker centered. 2182 MHz (correct 2nd LO frequency) signal should appear two divisions above 2180 MHz.

c. Remove the time markers from the test spectrum analyzer Input and connect the 2nd LO output to the test spectrum analyzer input.

d. Switch the 492 FREQUENCY RANGE to 0—4.2 GHz (0—1.8 GHz, Option 1) or band 1.

e. Check—that the 2nd LO frequency is 2182 MHz ±1 MHz (1 to 3 divisions above the 2180 center frequency with a span/div of 1 MHz). If the 2nd LO frequency is out of tolerance, repair or replace the assembly.

f. Turn POWER off and remove the Center Frequency Control board and install on the extender board.

g. Turn POWER on and reduce FREQ SPAN/DIV to 500 kHz.

h. Adjust test spectrum analyzer frequency to the frequency of the 2nd LO (2182 MHz). Set the Span/Div to 1 MHz.

i. Activate SINGLE SWEEP and IDENTIFY 500 kHz/ONLY. Adjust 2nd LO Fine Tune range with R4028 (see Fig. 3-33) so the 2nd LO frequency shifts 1 MHz each time SINGLE SWEEP button is pressed. If unable to get 1 MHz offset, replace 2nd LO assembly.

j. Disconnect the 2nd LO output from the test spectrum analyzer and replace 50 Ω termination. Return the 492 Triggering to FREE RUN.

k. Apply the calibrator signal to the 492 RF INPUT and adjust the controls to center the calibrator signal on screen (FREQ SPAN/DIV at 500 kHz).

l. Activate IDENTIFY 500 kHz/ONLY and adjust 1st LO Offset with R1030 (Fig. 3-33) so the display has no noticeable horizontal offset. If adjustment cannot be made replace D/A Converters U1028, U1024.

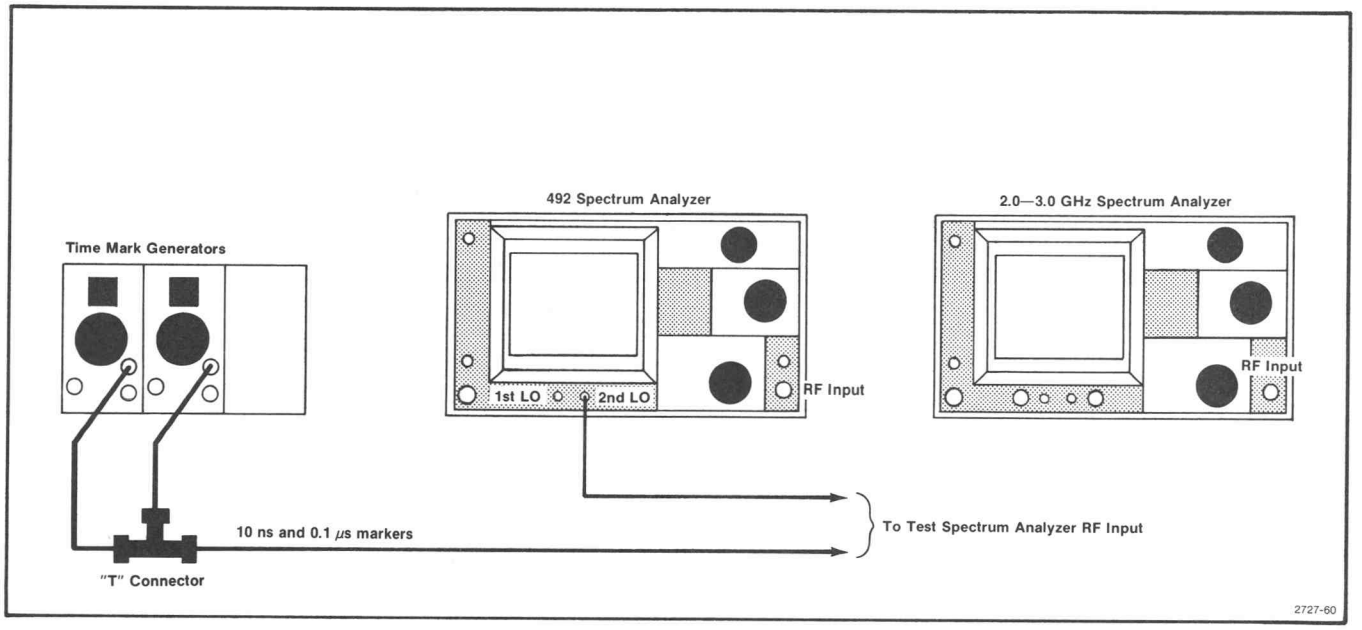

Fig. 3-32. Test equipment setup for check and adjustment of 1st and 2nd LO frequency.

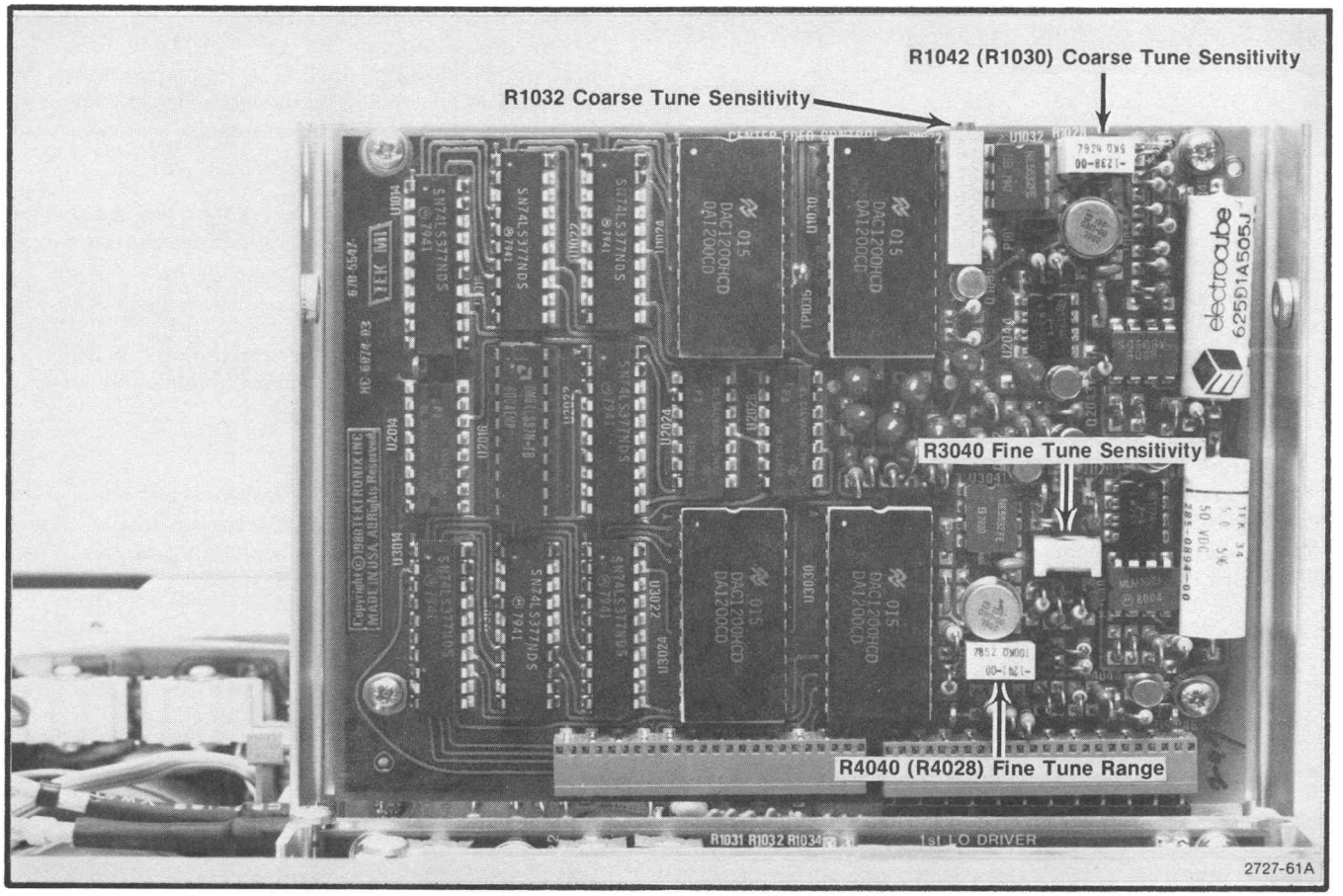

Fig. 3-33. Center frequency control adjustment locations. (Circuit numbers in parenthesis apply to earlier version boards.)

7. Adjust 1st Converter Bias

NOTE

This adjustment should only be necessary if frequency response problems are encountered.

This step is a two part procedure. The first applies to 492 instruments with 1st LO Driver board 670-5551-03 and up. The second applies to 492 instruments with 1st LO Drive board 670-5551-00 through 670-5551-02.

PART 1

(1st LO Driver board 670-5551-03 and up)

a. Switch the FREQUENCY RANGE to the 3.0—7.1 band. Adjust Bias 1 (R1013) on the 1st LO Driver (Fig. 3-34) for 0.25 V at TP1011.

b. Switch the FREQUENCY RANGE to the 5.4—18 GHz band. Adjust Bias 2 (R1022) for 0.25 V at TP1011.

c. Change the FREQUENCY RANGE to the 15—21 GHz band. Adjust Bias 3 (R1026) for −0.25 V at TP1011.

PART 2

(1st LO Driver board 670-5551-00 through 02)

a. Switch the FREQUENCY RANGE to 3.0—7.1 GHz band. Adjust Bias 1 R1022 on the 1st LO Driver board, Fig. 3-34 for −0.25 V at TP1025.

b. Change the FREQUENCY RANGE to the 5.4—18 GHz band. Adjust Bias 2 (R1026) for 0.25 V at TP1025.

c. Change the FREQUENCY RANGE to 15—21 GHz band. Adjust Bias 3 (R1029) for 0.25 V at TP1025.

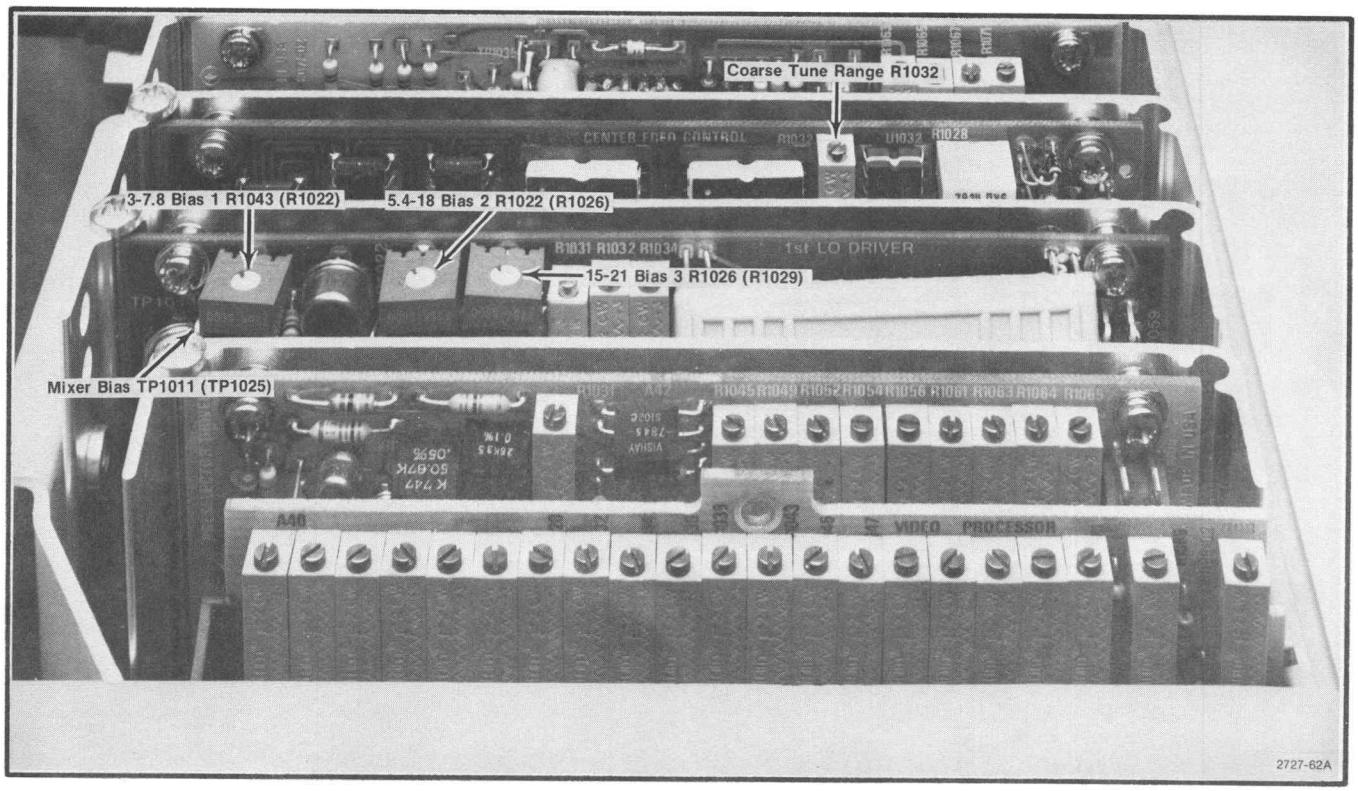

Fig. 3-34. 1st LO Driver adjustments and test point locations. (Circuit numbers in parenthesis apply to earlier version boards.)

PROGRAM TO FACILITATE CALIBRATING THE 1st LO DRIVER AND THE CENTER FREQUENCY CONTROL BOARDS OF THE 492P, USING TEKTRONIX 4050-SERIES COMPUTER TERMINAL.

```
1 ON SRQ THEN 700
2 GO TO 700
4 ON SRQ THEN 100
5 GO TO 210
8 ON SRQ THEN 100
9 GO TO 230
12 ON SRQ THEN 100
13 GO TO 300
16 ON SRQ THEN 100
17 GO TO 400
20 ON SRQ THEN 100
21 GO TO 500
24 ON SRQ THEN 100
25 GO TO 600
100 REM *** ERROR HANDLING ROUTINE ***
110 POLL Z8,Z9;A9
120 PRINT  A9:"ERR?"
130 INPUT  A9:Z$
140 PRINT Z$
150 RETURN
200 REM *** ADJUST COARSE TUNE RANGE R1032 CEN FRE CONTROL BRD ***
210 PRINT  A9:"FRE 0"
220 RETURN
230 PRINT  A9:"FRE 4278M"
240 RETURN
300 REM *** ADJUST 1ST LO SENSE (GAIN) AND OFFSET ***
310 PRINT  A9:"FRE 100M;DEG;SIG;WAI"
320 PRINT  A9:"FRE 1.8G;DEG;SIG;WAI"
330 GO TO 310
400 REM *** ADJUST COARSE TUNE SENSITIVITY R1042 CEN FRE CON BRD ***
410 PRINT  A9:"TUN 5M;SIG;WAI"
420 PRINT  A9:"TUN -5M;SIG;WAI"
430 GO TO 410
500 REM *** ADJUST FINE TUNE RANGE R4040 CEN FRE CON BRD ***
510 PRINT  A9:"TUN 2M;SIG;WAI"
520 PRINT  A9:"TUN -2M;SIG;WAI"
530 GO TO 510
600 REM *** ADJUST FINE TUNE SENSITIVITY R3040 CEN FRE CON BRD ***
610 PRINT  A9:"TUN 2K;SIG;WAI"
620 PRINT  A9:"TUN -2K;SIG;WAI"
630 GO TO 610
700 REM *** START UP PROCEDURE ***
710 PAGE
720 PRINT "ENTER THE 492P'S GPIB PRIMARY ADDRESS ";
730 INPUT A9
740 POLL Z8,Z9;A9
750 RETURN
```

8. Baseline Leveling (Video Processor)

This procedure adjusts the baseline so it offsets Band 4 response perturbations and levels the display.

a. Test equipment set-up is shown in Fig. 3-35. The output of the sweep generator is applied through a 3 dB attenuator and high performance coaxial cable to a power divider. Connect one output of the power divider directly to the RF INPUT of the 492 and the other to the sensor for the power meter. Switch the RF plug-in ALC to MTR position and connect a coaxial cable between Recorder Output of the power meter and the Ext ALC Input of the 2—15 GHz plug-in unit on the sweeper. Set the Power Level to approximately −10 dBm then adjust the Gain on the unit for stable operation (output stops oscillating).

b. Switch POWER off, pull the Video Processor board and install it on an extender board.

c. Pull Leveler Disable plug (P3035) on the Video Processor board (see Fig. 3-36).

d. Switch POWER on and set the controls as follows:

FREQUENCY RANGE	5.4—18.0 GHz (band 4)
FREQ SPAN/DIV	MAX
MIN RF ATTEN	10 dB
REF LEVEL	−10 dBm
FREQUENCY	10 GHz
Vertical Display mode	10 dB/DIV
RESOLUTION	AUTO
TIME/DIV	10 ms

e. On the sweep generator, select a 5.5 GHz cw marker and adjust the output for −10 dBm reading on the power meter.

f. Switch the Vertical Display to 2 dB/DIV and adjust the REF LEVEL so the signal amplitude is half screen. If the 492 has Option 1, adjust PEAKING for maximum response.

g. On the sweep generator, change to the automatic internal sweep (Marker Sweep) and set the sweep time for 100 s/sweep (its slowest sweep).

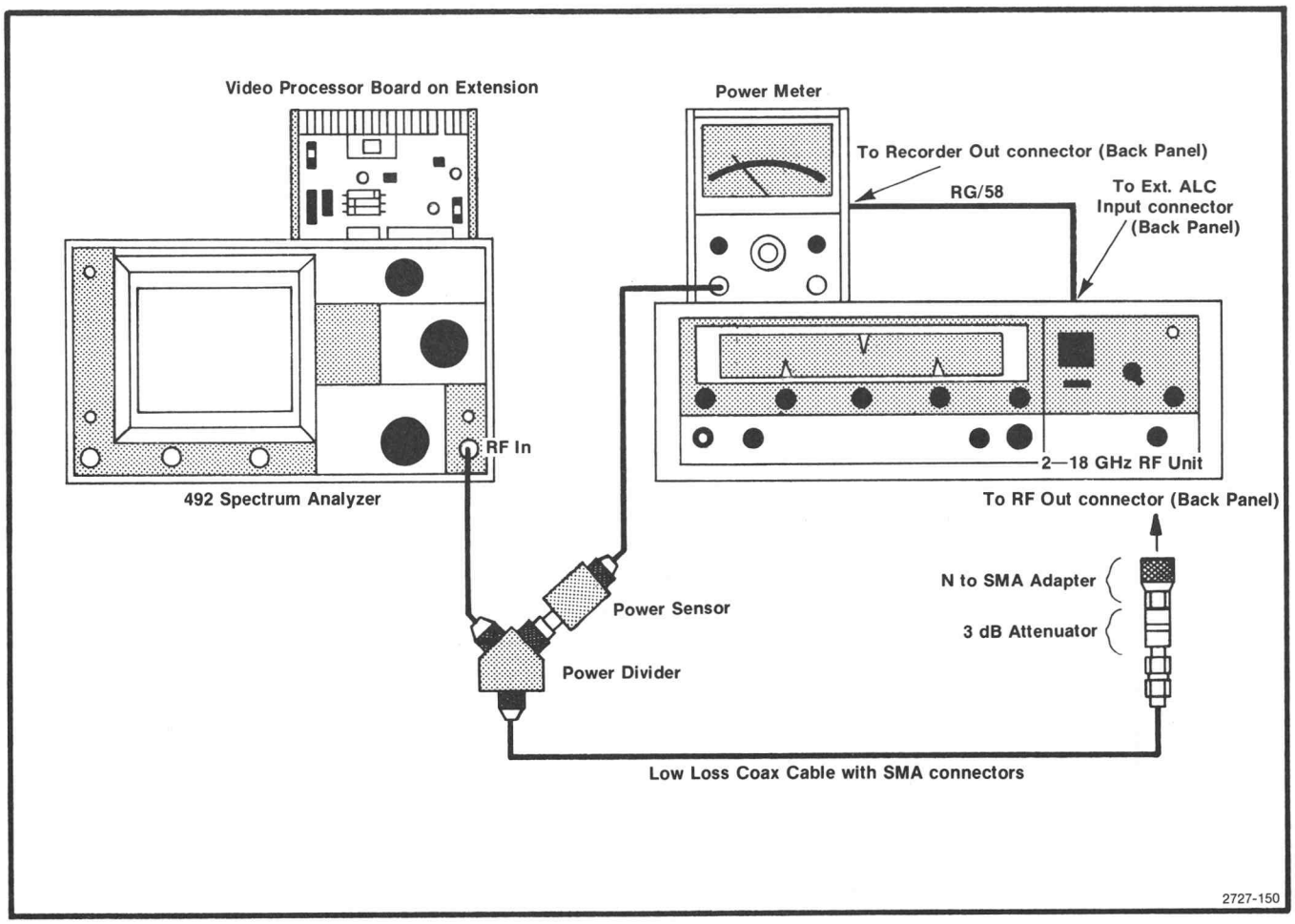

Fig. 3-35. Test equipment setup for adjusting baseline leveling.

h. Activate VIEW A and VIEW B then select a sweep time on the 492 so the stored display is solid (no breaks in the digitized display, see Fig. 3-37A).

i. Activate MAX HOLD and SAVE A. Trace and record the response of band 4.

j. De-activate VIEW A and MAX HOLD (SAVE A and VIEW B still active).

k. Switch the Vertical Display mode to 10 dB/DIV and note the baseline. Activate NARROW Video Filter and adjust the REF LEVEL so the baseline moves to the top of the screen.

l. Switch the Vertical Display mode to 2 dB/DIV. Activate VIEW A and adjust the REF LEVEL so SAVE A display and the baseline are at center screen.

m. Unplug P2060 (Fig. 3-36) and move it from Normal to Invert mode (one pin to the left). Replace Leveler Disable plug P3035.

n. Start with R1061 and adjust the leveling potentiometers sequentially, from R1061 through R1013, so the contour of the baseline is an average of the SAVE A display. In the process use Horiz adjust R1069 (Fig. 3-36) to shift the baseline to the right or left so the baseline aligns with the average contour of SAVE A display.

o. Replace P2060 to the Normal mode position (one pin to the right). The baseline will now be 180° or the inverse of its previous position.

p. De-activate and then activate VIEW A, VIEW B, SAVE A, and MAX HOLD. Retrace and check new response. Response should appear flat (see Fig. 3-37B).

q. Switch POWER off, and re-install the Video Processor board. Disconnect and remove the signal to the RF INPUT from the test equipment.

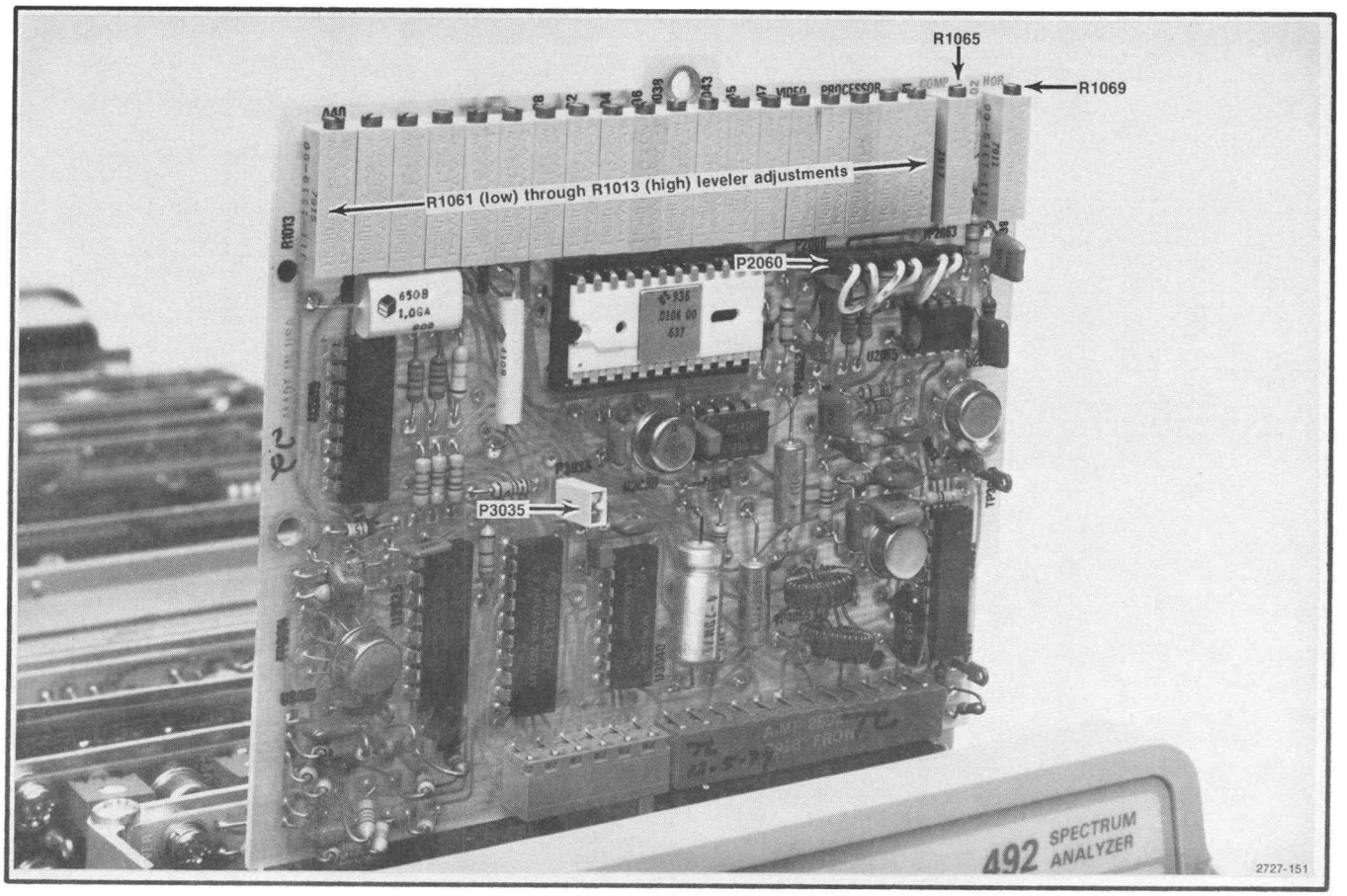

Fig. 3-36. Adjustments and test points on the Video Processor board.

r. Compensation adjustment R1065 is set at the factory and usually does not require adjustment. Pull Leveler Disable plug P3035 then replace it. If the baseline remains straight or breaks up after the plug is replaced, compensation is required. Adjustment procedure is as follows:

1) With the front panel controls set as directed in step d, activate NARROW Video Filter and change TIME/DIV to 50 ms. Alternately turn the 19 level adjustments clockwise and counterclockwise so every other potentiometer is fully clockwise and the adjacent potentiometer is fully counterclockwise. Display should now appear as a periodic triangular waveform.

2) Adjust the REF LEVEL so the baseline is near full screen then switch to the 2 dB/DIV mode and adjust so the display is mid screen (see Fig. 3-38A).

3) Turn Compensation adjustment R1065 counterclockwise until the display breaks up (see Fig. 3-38B).

4) Now turn R1065 clockwise 1.5 to 2 turns past the point the display again becomes a periodic triangular waveform.

5) Turn Horiz adjust R1069 to center the display.

6) Return the baseline leveler adjustments to their midrange position for a straight line display and proceed with the baseline leveling alignment as previously described (part a through q).

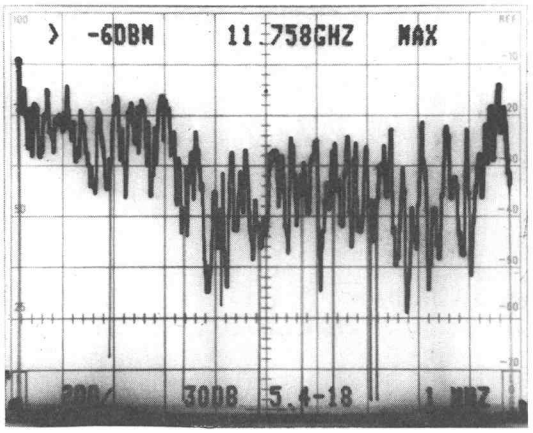

A. Typical response before baseline leveling.

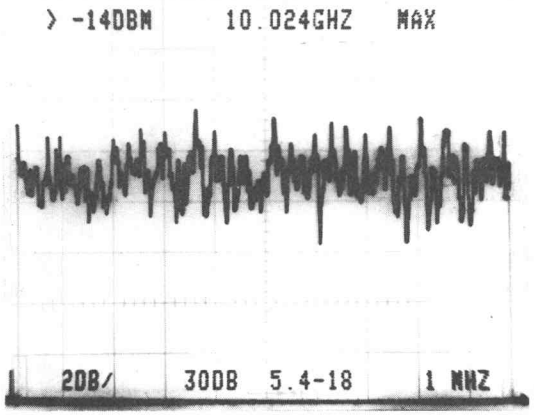

B. Typical response after baseline leveling.

2727-152

Fig. 3-37. Typical response displays when adjusting baseline leveling.

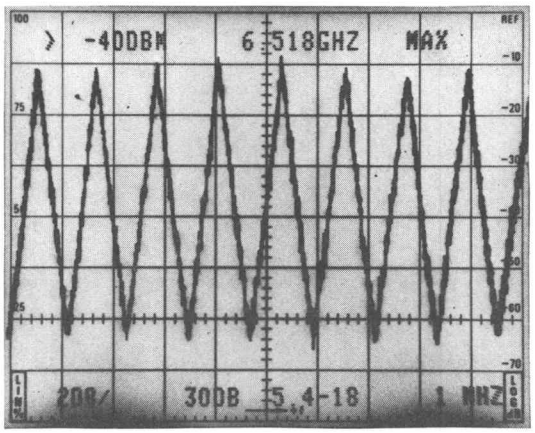

A. Series of waveforms. Amplitude approximately ±5 dB above and below baseline reference.

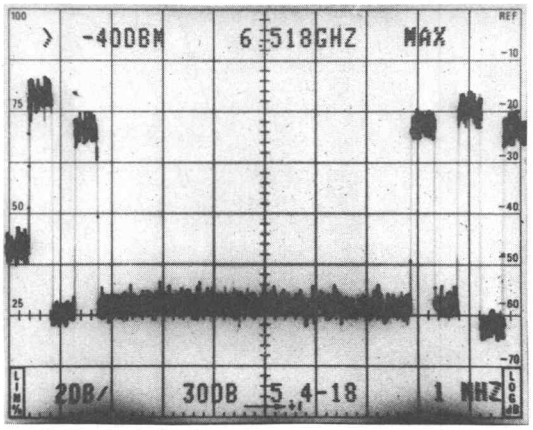

B. Typical display when display breaks up.

2727-153

Fig. 3-38. Typical response displays when adjusting compensation of baseline leveling circuits.

9. Log Amplifier Calibration

CAUTION

Use only an insulated screwdriver or tuning tool, such as Tektronix Part No. 003-0675-00, to make these adjustments.

a. Test equipment setup is shown in Fig. 3-39. Set the front panel controls as follows:

REF LEVEL	−70 dBm
MIN RF ATTEN	0 dB
FREQ SPAN/DIV	200 MHz
FREQUENCY	200 MHz
TIME/DIV	AUTO
Vertical Display	10 dB/DIV
CAL (LOG and AMPL)	Centered

b. Apply a 10 MHz signal of 0 dBm from the signal generator, through 10 dB and 1 dB step attenuators, to the input of the Log Amplifier at J621 (Fig. 3-40). Set the step attenuators for 50 dB of attenuation.

c. Position the display at a graticule reference line with the variable output of the signal generator; then switch the REF LEVEL from −70 dBm to −120 dBm, and adjust the front panel LOG CAL so each 10 dB step equals 1 division.

d. Set the REF LEVEL to −20 dBm and the attenuators for 0 dB.

e. Increase the step attenuators in 10 dB steps. Adjust Log Gain, R4020 (Fig. 3-40), so each 10 dB of change produces a division of change on the display.

f. Return the step attenuator to 0 dB. Display should be full screen (0 dBm), if not, readust signal generator output for 0 dBm.

g. Alternately switch the Vertical Display between 10 dB/DIV and 2 dB/DIV while adjusting Input Ref Lvl, R4071 (Fig. 3-40), for minimum amplitude change between the two displays.

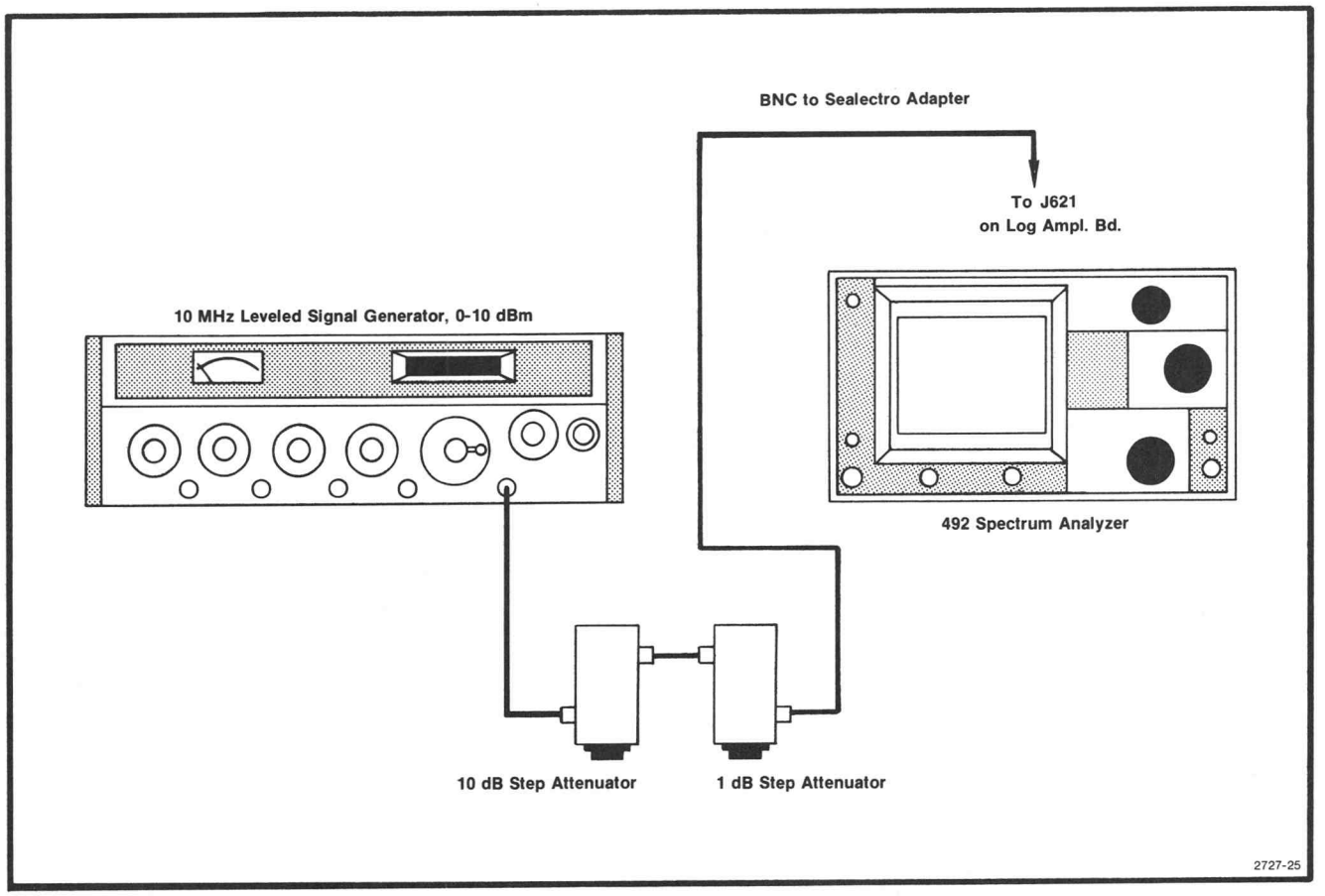

Fig. 3-39. Equipment setup for calibrating log amplifier.

h. Switch Vert Display to 2 dB/DIV. Switch in 10 dB of attenuation and note how close the 10 dB step is to 5 divisions of display change. If the 10 dB step is short (trace falls short of the correct line), adjust gain with R4020 slightly in the same direction; then switch out the 10 dB of attenuation and adjust R1071 for a full screen display. Repeat this check until the 10 dB step is within 0.2 dB. Switch to 10 dB/DIV display mode and recheck 10 dB logging.

i. Switch to the 2 dB/DIV mode; then momentarily remove the input signal to the Log Amplifier and position the display on the bottom graticule line. Re-apply the signal to the Log Amplifier.

j. Adjust Output Ref Lvl, R4081 (Fig. 3-40), for a full screen (8 divisions) display.

k. Switch to the 10 dB/DIV mode and set the step attenuators for 40 dB. Adjust Log Linearity, R1085 (Fig. 3-40), so the display is mid-screen.

l. If a large change in the setting of R1085 was required in part j of this step, repeat the adjustments of R4071 and R4081 because of interaction.

m. Check the accuracy of 10 dB/DIV and 2 dB/DIV display modes by switching the attenuation in 10 dB steps for 10 dB/DIV mode and 1 dB steps for the 2 dB/DIV mode. Note that the display steps 1 division ±0.25 minor division for each 10 dB step, and ±1.0 minor division for the 2 dB mode. Once the individual steps have been verified, reset the signal level for full screen; then switch in the appropriate step attenuation to step the display down screen to measure the worst case error over the dynamic range. Maximum error must not exceed ±1.5 dB over the first 80 dB of range, or ±1.0 dB over the 16 dB range.

n. If the 10 dB log step in the 2 dB/DIV mode is long, adjust gain with R4020 for less gain and rebalance R4071.

o. Set the step attenuators for 10 dB of attenuation; then adjust the signal output level for a full screen display (+10 dBm) in the 2 dB/DIV mode.

p. Activate MIN NOISE and switch out the 10 dB of attenuation.

q. Check that the display level returns to within ±1.0 dB of reference.

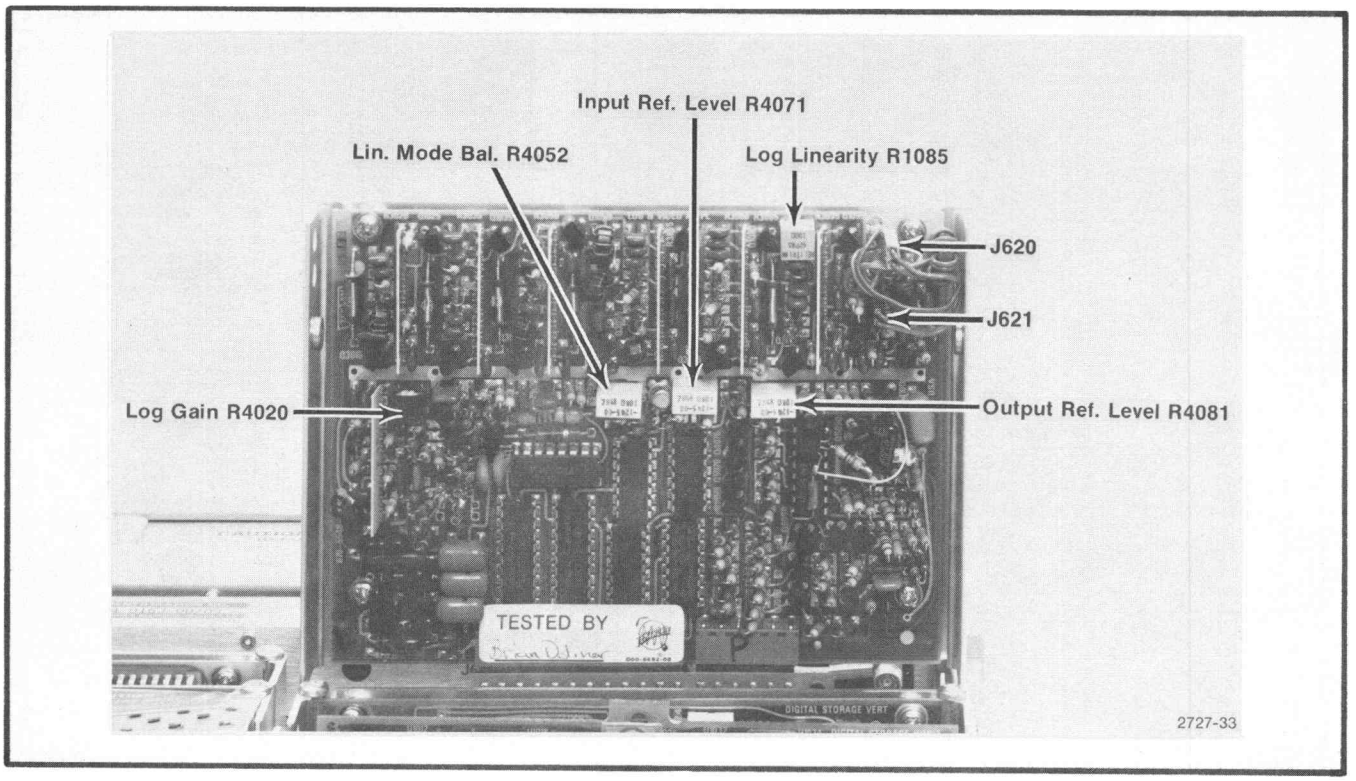

Fig. 3-40. Location of connectors and adjustments on the Log and Video Amplifier.

r. Set the Ref level to −15 dBm and adjust the signal generator output for a full screen display in the 2 dB/DIV mode.

s. Switch the vertical display to LIN and adjust Lin Bal, R4052 (Fig. 3-40), for a full screen display. Display amplitude of LIN, 2 dB/DIV, and 10 dB/DIV display should now be the same.

t. Check LIN mode linearity by adding 6 dB, 12 dB, and 18 dB of attenuation and noting that the display level is down from top of screen 4 (±0.4), 6 (±0.4), and 7 (±0.4) divisions.

u. Remove the signal generator signal connection to the Log Amplifier input jack and replace P621.

10. Calibrating the Resolution Bandwidth and Shape Factor

NOTE

The filters are aligned separately and then combined with a signal applied through both the VR#1 and VR#2 modules. The final touch-up adjustments can be made for filter shape and bandwidth. Because of interaction, it is easy to offset one filter with misadjustment of the other; therefore, only slight adjustments should be made.

Adjust the bandwidth of each filter section at the 3 dB down level. This point should be as wide or slightly wider than the 6 dB down point of the combined two filter sections.

a. Equipment setup is shown in Fig. 3-41.

1. With the VR module on extenders, apply the 10 MHz signal, from the third converter (P693), through a Sealectro male-to-male adapter and a coaxial cable to the VR#2 input (J683).

2. Connect the output of VR#2 (J682) through a coaxial cable to the input of the Log Amplifier at J621 (Fig. 3-40).

3. Connect the CAL OUT signal through a coaxial cable to the RF INPUT.

4. Set the front panel controls as follows:

FREQUENCY	100 MHz
FREQ SPAN/DIV	50 kHz
RESOLUTION BANDWIDTH	100 kHz
REF LEVEL	−20 dBm

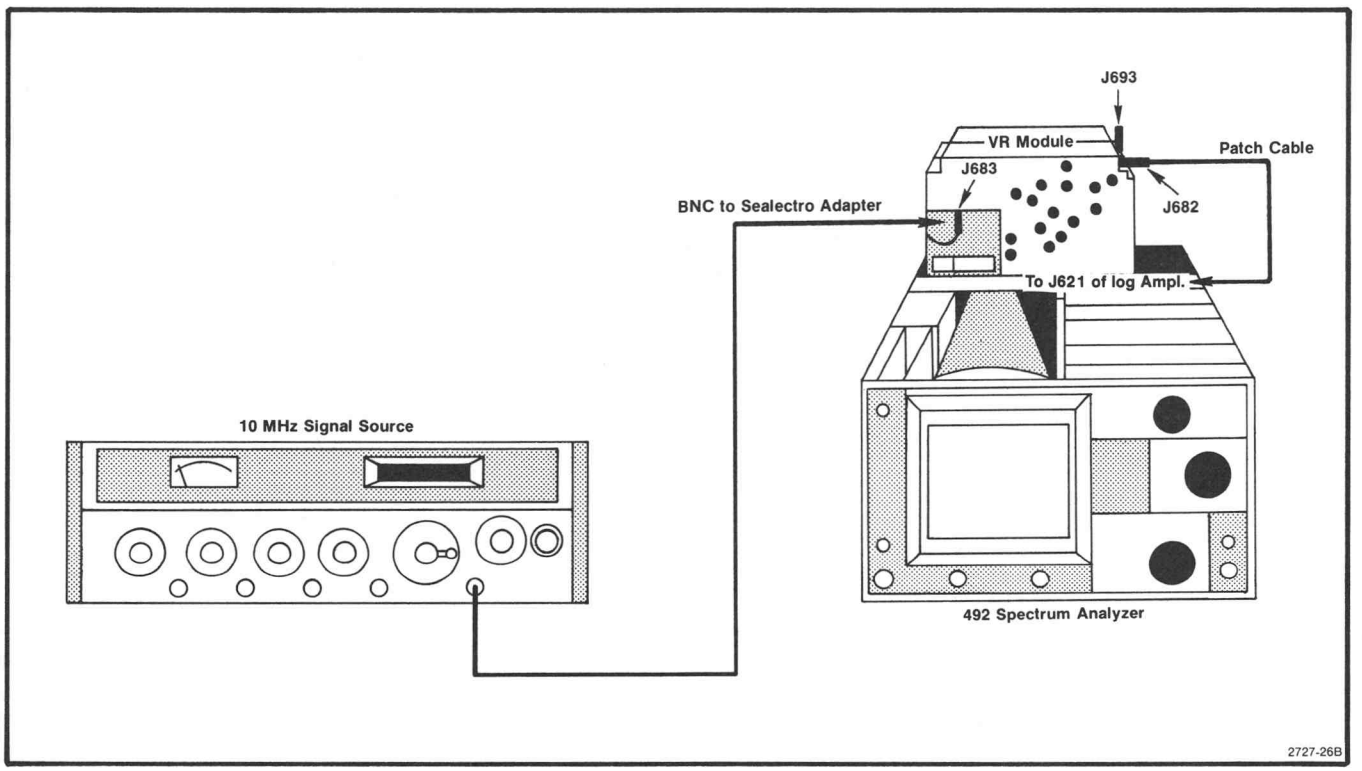

Fig. 3-41. Test equipment setup for calibrating the VR section.

b. Tune the signal to center screen and change the Vertical Display to 2 dB/DIV. Adjust the REF LEVEL for a seven division signal. Tune the display to center screen.

NOTE

The 10 kHz filter is used as the reference for centering the response of all filters.

c. Increase the FREQ SPAN/DIV to 50 kHz and the RESOLUTION BANDWIDTH to 100 kHz.

d. Adjust C2050 and C5055 (Fig. 3-43) for the best 100 kHz filter shape and waveform centering (100 kHz, 3 dB down, and centered with respect to the 10 kHz reference). Refer to Fig. 3-42.

e. Return the RESOLUTION BANDWIDTH to 10 kHz and recheck for centering. Switch the FREQ SPAN/DIV to 500 kHz and the RESOLUTION BANDWIDTH to 1 MHz.

f. Adjust C2026 and C1022 (Fig. 3-43) for the best 1 MHz filter shape and waveform centering.

g. Return to 10 kHz resolution and recheck centering; then adjust C4040 and C6045 (Fig. 3-43) for the best 10 kHz filter shape.

h. Switch FREQ SPAN/DIV to 10 kHz and RESOLUTION BANDWIDTH to 1 kHz.

i. Adjust C5030 and C6040 for maximum signal amplitude and 1 kHz filter shape.

j. If the instrument has Option 3 (100 Hz filter) switch the RESOLUTION BANDWIDTH to 100 Hz and FREQ SPAN/DIV to 500 Hz.

k. Adjust the 100 Hz filter shape and response amplitude with C6011 and C7011. Adjust for maximum amplitude and a bandwidth, at the 3 dB down point, of 100 Hz.

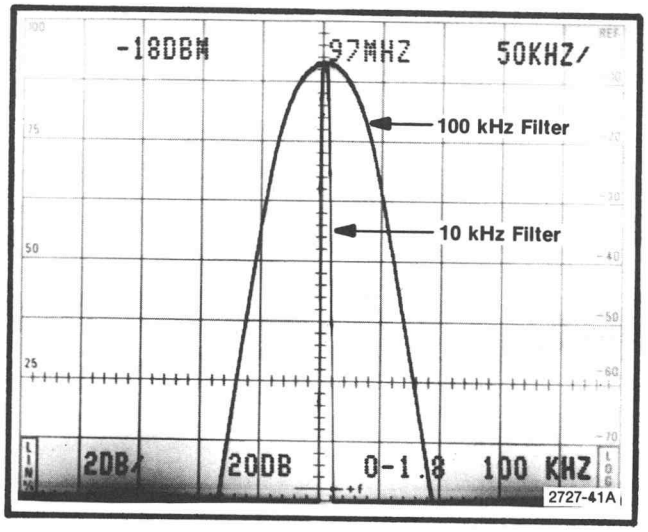

Fig. 3-42. Response of the 100 kHz filter.

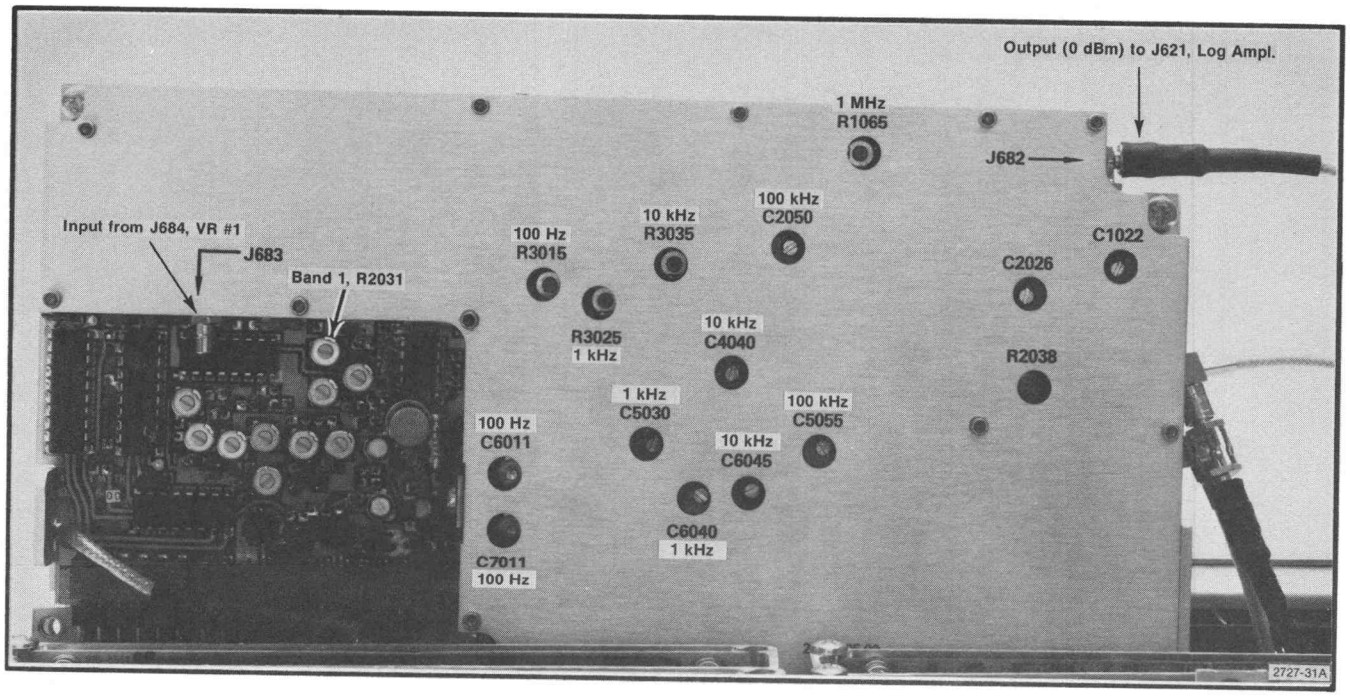

Fig. 3-43. Calibration adjustments on VR #2 module.

l. Now disconnect the 10 MHz third converter signal (P693) from the VR#2 input and connect it to the input of VR#1 (J693), through the Sealectro male-to-male adapter and coaxial cable. Connect the output of VR#1 (P683) through another Sealectro male-to-male adapter and coaxial cable to the input of the Log Amplifier at J621 (Fig. 3-40).

m. Change the FREQ SPAN/DIV to 500 kHz and RESOLUTION BANDWIDTH to 100 kHz. Re-adjust the REFERENCE LEVEL for a seven division signal in the 2 dB/DIV display mode.

n. Switch the FREQ SPAN/DIV to 10 kHz and the RESOLUTION BANDWIDTH to 10 kHz. Center the response on screen.

o. Now, switch the FREQ SPAN/DIV to 50 kHz, the RESOLUTION BANDWIDTH to 100 kHz, and adjust the 100 kHz filter with C3023 and C3035 (Fig. 3-44) for filter shape and frequency centering.

p. Switch back to 10 kHz RESOLUTION BANDWIDTH and recheck centering.

q. Switch the RESOLUTION BANDWIDTH to 1 MHz and FREQ SPAN/DIV to 500 kHz; then adjust the 1 MHz filter response and centering with C1033 and C1026 (Fig. 3-44).

r. Return the FREQ SPAN/DIV to 5 kHz and RESOLUTION BANDWIDTH to 10 kHz and center the signal on screen.

s. Adjust the 10 kHz filter with C3026, C2037, and C3051 (Fig. 3-44) for best filter shape and amplitude.

t. Set the FREQ SPAN/DIV to 500 Hz and RESOLUTION BANDWIDTH to 1 kHz; then adjust the 1 kHz filter with C2040 and C2046 (Fig. 3-44) for best amplitude and waveshape.

u. If the instrument has Option 3, switch the RESOLUTION BANDWIDTH to 100 Hz and the FREQ SPAN/DIV to 500 Hz. Adjust the 100 Hz filter with C1030 and C1035 (Fig. 3-44) for amplitude and waveshape.

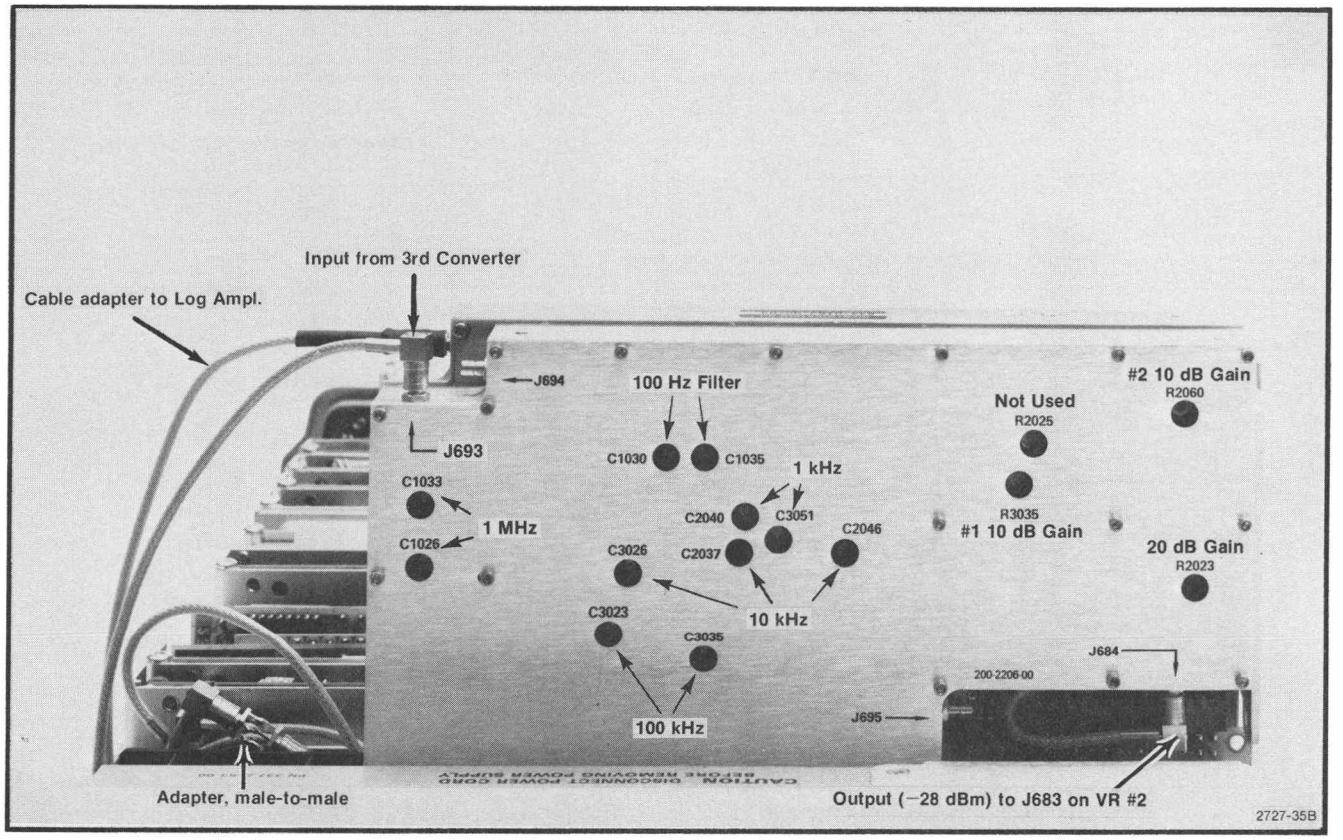

Fig. 3-44. Calibration adjustments on VR #1 module.

v. Disconnect the cable between P683 and the Log Amplifier input (J621). Reconnect P683 to J683 and connect the output from the VR#2 to the Log Amplifier input (J621). The signal should now pass through both VR#1 and VR#2 to the input of the Log Amplifier.

w. Check the waveshape, bandwidth, and centering of all filters. Center the 100 kHz and 1 MHz filter response around the 10 kHz filter. If necessary, make only fine or minor adjustments. Figure 3-45 shows typical response shapes.

x. Check filter leveling using the 100 kHz filter as the reference amplitude. Adjust all filters to the 100 kHz level as follows:

Filter	Adjust	Location
1 MHz	R1065	VR#2
10 kHz	R3035	VR#2
1 kHz	R3025	VR#2
100 Hz (Option 3)	R3015	VR#2

Locations of the adjustments are shown in Figs. 3-43 and 3-44.

11. Presetting the Variable Resolution Gain and Band Leveling

NOTE

The Log Amplifier must be calibrated before adjusting any VR gain settings. Log amplifier calibration can be verified by applying a 0 dBm, 10 MHz signal to the input (J621) of the Log Amplifier and checking for full screen display with a −20 dBm REF LEVEL.

Two levels are referred to in this procedure. Levels within brackets apply to VR assemblies prior to assembly No. 164-0163-02.

The Post VR Gain, R2038 (Fig. 3-43), is normally preset by removing the VR#2 module cover and applying a −16 dBm (−20 dBm), 10 MHz signal to pin JJ. Adjust for a full screen display with a REF LEVEL of −30 dBm. Replace the cover before proceeding with the other gain adjustments. Band gain adjustments, other than band 1, must be done after tracking has been calibrated and flatness checked. If the range of any band gain adjustments is insufficient, add a diode between the output from U3023 and the base of Q2049, as shown on the schematic diagram for Variable Resolution No. 2.

a. Test equipment is shown in Fig. 3-41. Install VR#2 module on an extender board as shown in Fig. 3-39. Set the front panel controls as follows:

REF LEVEL	−30 dBm
MIN RF ATTEN	0 dB
FREQ SPAN/DIV	1 MHz
RESOLUTION BANDWIDTH	100 kHz
VERT DISPLAY	2 dB/DIV

b. Disconnect P683 from the VR#2 module and apply a 10 MHz, −21 dBm (−28 dBm) signal from the signal generator through a BNC-to-Sealectro adapter to J683 (Fig. 3-43). (This sets the input level to the VR. Level within brackets applies to assemblies prior to assembly number 164-0163-02.)

c. Adjust band 1 Gain, R2031 (Fig. 3-43) of VR#2, for full screen display with −21 dBm (−28 dBm) input.

d. Remove the signal to J683 and reconnect P683; then disconnect P693 of VR#1 (Fig. 3-44) and apply a −40 dBm signal to J693.

e. Turn the front panel AMPL CAL adjustment fully clockwise and note display level. Decrease input attenuation 7 dB and adjust AMPL CAL so display returns to the reference. This will provide 7 dB increase range.

f. Change the generator output for −47 dBm signal level into the VR and change the REF LEVEL to −40 dBm.

g. Adjust the signal generator output for a seven division display.

h. Change the REF LEVEL to −30 dBm and the signal level to −37 dBm. Adjust 10 dB Gain, R3035 (Fig. 3-44), of VR#1, so the display is at the seven division reference level.

i. Set the REF LEVEL to −50 dBm and the signal generator for −57 dBm. Adjust the signal generator output for a seven division display (2 dB/DIV mode).

j. Change the REF LEVEL to −30 dBm and the generator to −37 dBm. Adjust 20 dB Gain, R2023 (Fig. 3-44), so the display is at the seven division reference.

k. Change the generator to −77 dBm and the REF LEVEL to −70 dBm. Adjust the signal generator output for a seven division reference level.

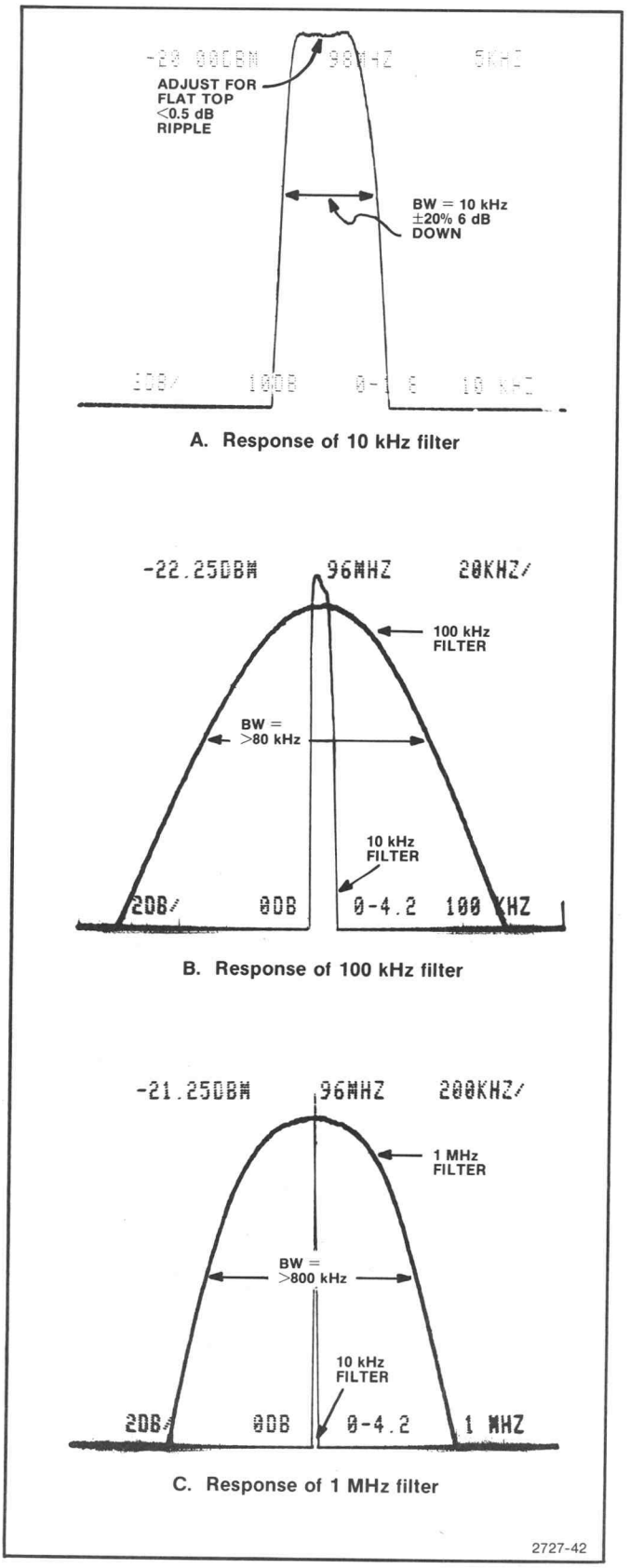

Fig. 3-45. Typical response of 10 kHz, 100 kHz, and 1 MHz bandwidth filters.

l. Return the REF LEVEL to −30 dBm and the generator output to −37 dBm. Adjust the second 10 dB Gain, R2060 (Fig. 3-44), so the display is at the seven division reference level.

m. Increase REF LEVEL to −40 dBm and generator output to −47 dBm. Check for seven division display level. Repeat for REF LEVELS of −50, −60, and −70 dBm and check that seven division reference level is maintained. Readjust approximate gain adjustments if necessary.

n. Remove the 10 MHz signal to J680 and reconnect P683. The final band gain level adjustments are described after Calibrating the Preselector Tracking and Checking Flatness. The mean average level for each band is set to the level of band 1.

12. Calibrator Output Level

The calibrator output level is calibrated to a known reference. The procedure for checking the level is described in Step 3 of the Performance Check part. Output level is adjusted with Cal Level, R1045 (Fig. 3-46). An adjustable capacitor, C3031 within the cover, is only adjusted if the oscillator fails to start. It is adjusted for maximum output.

13. IF Gain Calibration

a. Set the RESOLUTION BANDWIDTH to 100 kHz, REF LEVEL to −20 dBm, and apply −20 dBm 110 MHz signal, through the step attenuators, to the input (J365) of the 110 MHz filter, FL36 (Fig. 3-46).

b. Set the step attenuators for 0 dB attenuation then adjust the signal source output for a display reference of seven (7) divisions.

c. Remove the 110 MHz signal to the 110 MHz filter and reconnect P365.

d. Set the step attenuators for 21 dB then apply the 110 MHz signal to the input (J321) of the 110 MHz IF amplifier (Fig. 3-46).

e. Adjust the gain of the IF amplifier with R1015 for a display amplitude that equals the seven division reference set in part b.

f. Remove the 110 MHz signal and reconnect P321.

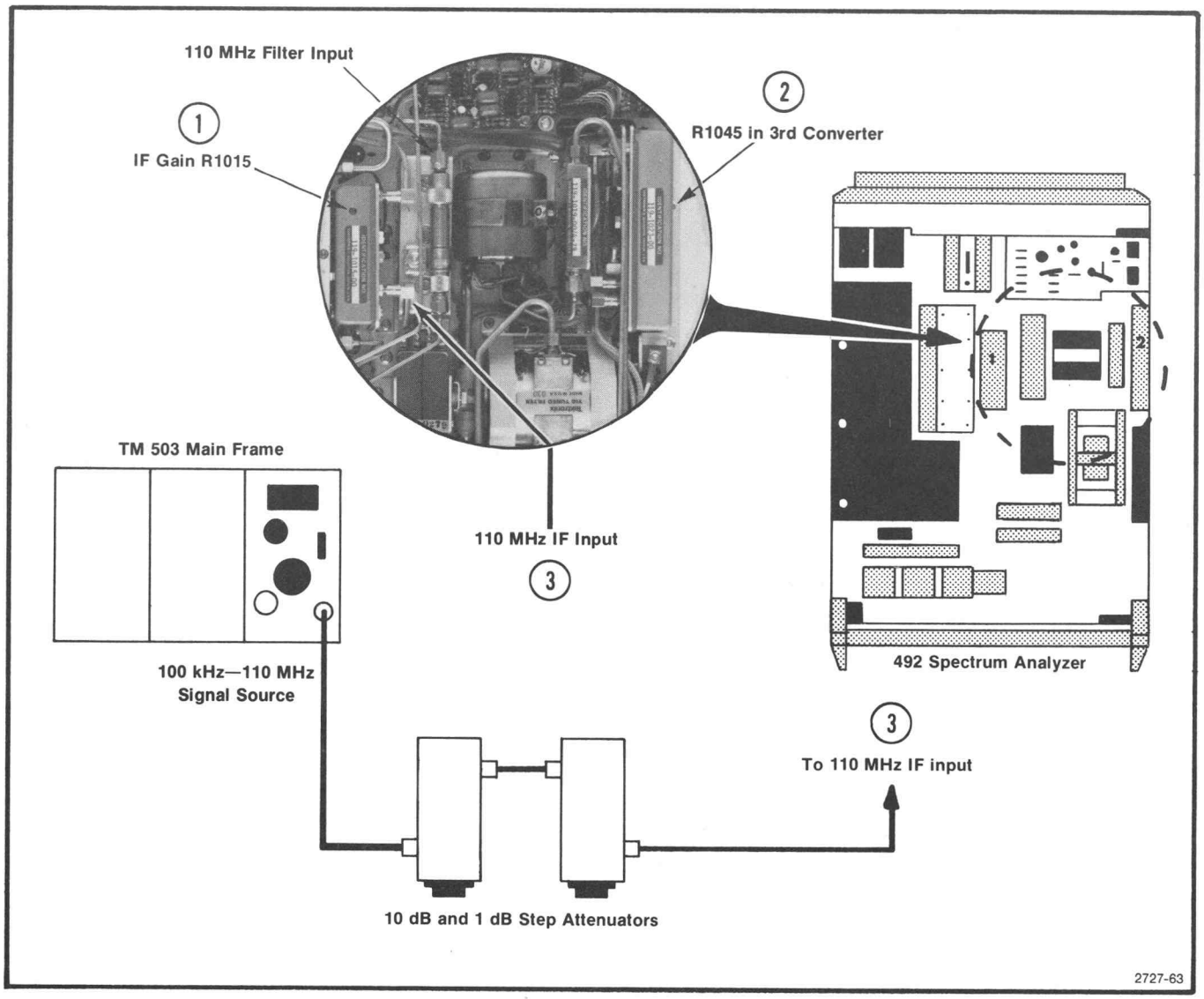

Fig. 3-46. Test equipment setup for adjusting IF gain and the location of the calibrator level adjustment.

g. Apply the CAL OUT signal to the RF INPUT. Set the REF LEVEL to −20 dBm. Center the 100 MHz calibrator signal on screen then decrease the FREQ SPAN/DIV to 100 kHz with a RESOLUTION BANDWIDTH of 100 kHz. Keep the calibrator signal centered on screen with the FREQUENCY control.

h. Adjust IF Gain R1015 for full screen (eight divisions) signal amplitude. Ensure that the front panel AMPL CAL still has 7 dB of range increase.

NOTE

Two variable capacitors, C325 and C2047, do not require adjustment during calibration. Procedure requires return loss measurement which is a maintenance and repair function.

14. Digital Storage Calibration

An alternate procedure for the 492P only follows this procedure.

a. Apply the CAL OUT signal to the RF INPUT and set the front panel controls as follows:

FREQUENCY	200 MHz
FREQ SPAN/DIV	20 MHz
REF LEVEL	−10 dBm
Vertical Display	10 dB/DIV
AUTO RESOLUTION	On
TIME/DIV	AUTO
Digital Storage	VIEW A

b. Adjust the PEAK/AVERAGE cursor so it is about one division above the bottom of the screen.

c. On the Horizontal Digital Storage board:

1. Adjust Horizontal Offset, R3041 (Fig. 3-47), so the left edge of the cursor is at the left edge of the crt (about 0.25 division over-span from the left graticule line).

2. Adjust Output Gain, R1040 (Fig. 3-47), so the right edge of the cursor is at the right edge of the crt.

3. Alternately switch the VIEW A (Digital Storage) on and off while adjusting Input Gain, R1045 (Fig. 3-47), so the storage signal at the right edge tracks with the non-store signal.

d. On the Vertical Digital Storage board:

1. Output Gain (R1024 and Output Offset (R1028), if installed, are adjusted at the factory and should not be changed. If disturbed, or for any other reason, Output Gain and Output Offset must be adjusted, center these adjustments. In either case, center Input Gain (R1034) before proceeding. These adjustments are shown in Fig. 3-47 except for R1028, which is located next to R1024.

2. Switch to 2 dB/DIV display mode.

3. Using a signal near the bottom of the display, adjust Vertical Offset, R1030 (Fig. 3-47), so the stored display is the same amplitude as the non-store signal.

4. Change the REF LEVEL to raise the amplitude of the signal to full screen.

5. Adjust Input Gain, R1034 (Fig. 3-47), so the stored display of the high amplitude signal is the same as the non-stored display.

6. Repeat the low level and high level adjustments to compensate for interaction.

NOTE

Output Gain (R1024) and Output Offset (R1028), if installed, are intended for adjustment in the 492P only.

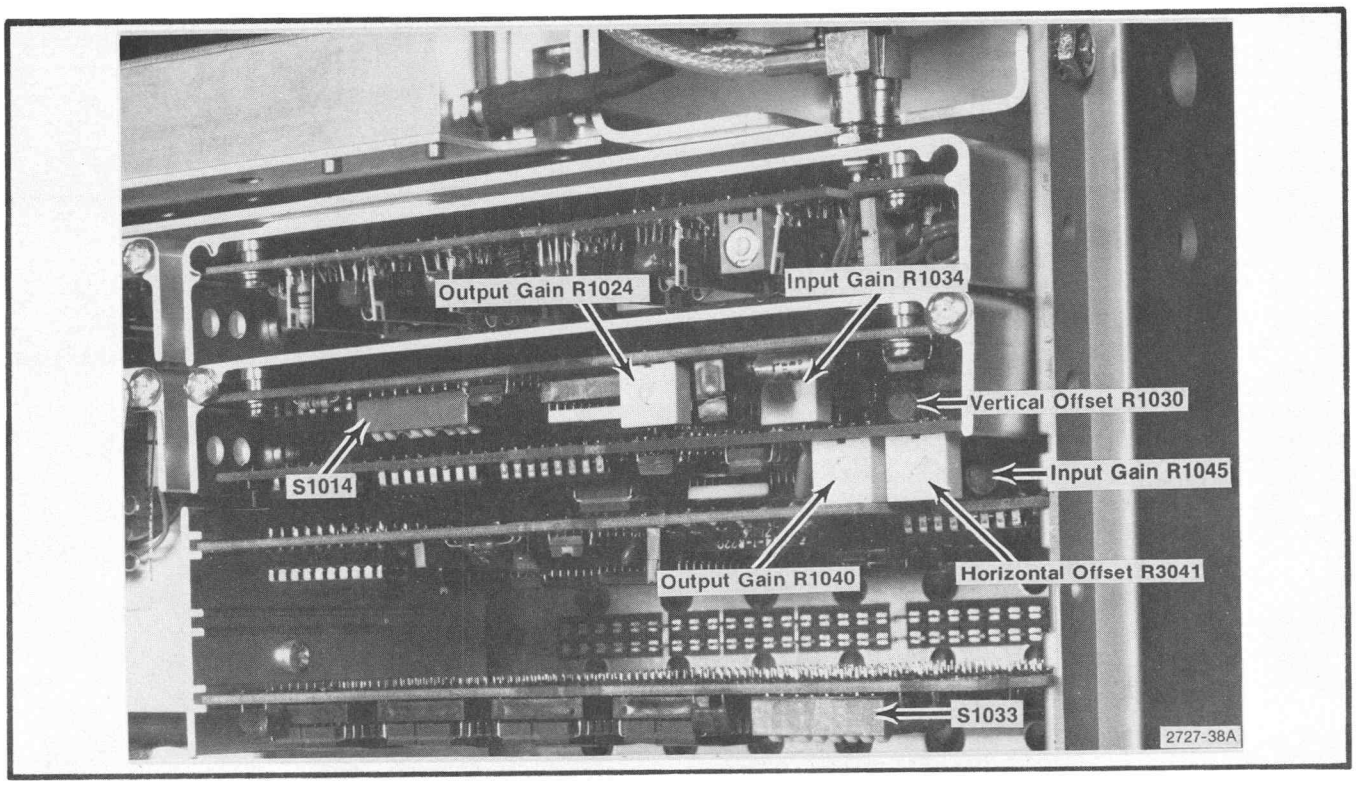

Fig. 3-47. Digital storage adjustment locations.

Alternate Procedure for 492P Only

a. Set the front-panel controls for:

FREQUENCY	100 MHz
FREQ SPAN/DIV	10 MHz
REF LEVEL	−10 dBm
AUTO RESOLUTION	Off
RESOLUTION BANDWIDTH	1 MHz
Vertical Display	2 dB/DIV
Video Filter	NARROW
TIME/DIV	AUTO
Digital Storage	VIEW A and VIEW B
PEAK/AVERAGE	Fully ccw

b. Connect CAL OUT to the RF INPUT.

c. Connect the 492P and 4050-Series controller with a GPIB cable (both should already be turned on). Set the 492P GPIB ADDRESS switches on the rear panel for address 1 (switch 1 up, all others in the switch bank down).

d. Enter and run the following program:

```
100 DIM C(1000)
110 K=125
120 I1=0
130 FOR I=1 TO 10
140 FOR J=1 TO 100
150 C(I1+J)=K
160 NEXT J
170 K=K-25
180 I1=I1+100
190 IF K>=25 THEN 210
200 K=225
210 NEXT I
220 PRINT @1:"SIGSWP"
230 WBYTE @33:64,C,-255
```

e. Adjust the POSITION controls to center the FREQUENCY dot and place the baseline on the bottom graticule line.

f. Adjust the following (Fig. 3-47) to match the step waveform as closely as possible to the graticule:

Assembly	Adjustment
Horizontal Digital Storage	Horizontal Offset, R3041
Horizontal Digital Storage	Output Gain, R1040
Vertical Digital Storage	Output Offset, R1028
Vertical Digital Storage	Output Gain, R1024

Output Offset, R1028, on the Vertical Digital Storage board (not shown on Fig. 3-47) is located beside Output Gain, R1024. Also, R3041 and R1040 may not be located as shown, but are positioned left-to-right in the same manner as shown in the figure.

Be sure that the left and right edges of the step waveform coincide with the left and right edges of the graticule. (This matches the horizontal display width of a 1000-point waveform to the graticule.)

g. Press FREE RUN and span down to 200 kHz/div, keeping the signal centered with the FREQUENCY control.

h. Increase REF LEVEL for a signal peak about 1 division above the bottom of the graticule.

i. Cancel VIEW A; while pressing VIEW B repeatedly, adjust Vertical Offset, R1030, on the Vertical Digital Storage board to remove any difference in amplitude between the stored and real-time waveforms.

j. Reduce REF LEVEL to bring the signal peak close to the top of the graticule.

k. Again pressing VIEW B repeatedly, adjust Input Gain, R1034, on the Vertical Digital Storage board to remove any difference in amplitude between the stored and real-time waveforms.

l. Because the offset and gain adjustments interact, repeat parts h through k as necessary.

m. Cancel the NARROW Video Filter.

n. Increase FREQ SPAN/DIV to 10 MHz and tune the signal to within 1 division, of the right edge of the graticule.

o. While pressing VIEW B repeatedly, adjust Input Gain, R1045, on the Horizontal Digital Storage board so the horizontal position of the stored signal matches that of the non-stored signal.

15. Setting B—SAVE A Reference Level

When B—SAVE A is selected, the expression implemented is (B—SAVE A) — k where k is a constant set by the input data for an 8-to-4 line encoder, U1015. Each bit will move the reference level about 0.2 minor division. Normally, the reference level is set at the center graticule line; however, it can be set anywhere within the graticule area by the setting of an 8-bit binary switch, S1014 (Fig. 3-48). The MSB (switch #8) shifts the display about five divisions, switch #7 half this amount, etc. The following procedure sets the reference level.

a. Estimate the amount and direction the reference level is to be shifted.

b. Switch the POWER on and close or open the switches on S1014 (Fig. 3-48) to obtain the desired B—SAVE A reference level.

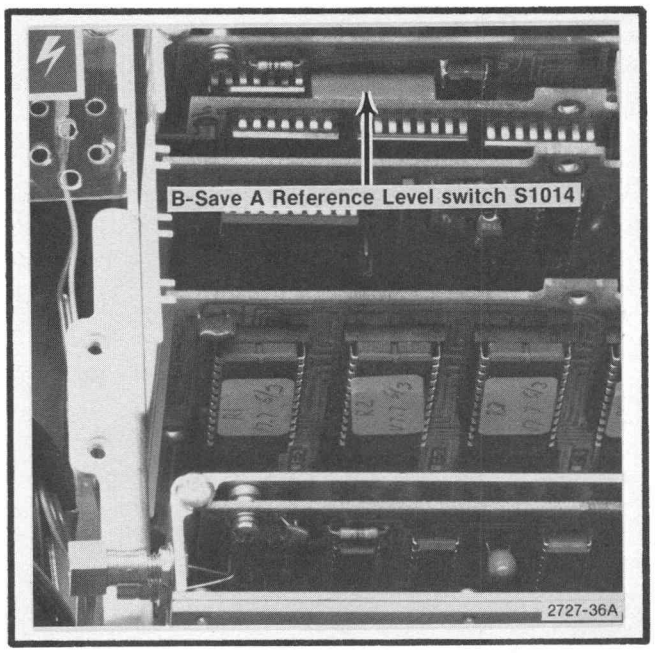

Fig. 3-48. Location of binary switch (S1014) for setting B—SAVE A reference level.

16. Band Leveling for Coaxial Bands (Bands 1—5)

NOTE

The mean value of the flatness response for each band is set to a −20 dBm reference at 100 MHz.

a. Perform band 1 gain adjustment as described under Variable Resolution Gain and Band Leveling (Step 8).

b. Perform flatness check of bands 1 through 5 as described under Frequency Response Check (Step 8 of the Performance Check) and note the frequency at which the average level occurs for each band.

c. Set the front panel controls as follows:

Vertical Display	2 dB/DIV
REF LEVEL	−20 dBm
FREQ SPAN/DIV	10 MHz
RESOLUTION BANDWIDTH	1 MHz
TIME/DIV	AUTO
Digital Storage (Option 2)	VIEW A/VIEW B

d. Switch the frequency range to band 2 (1.7—5.5 GHz) and apply a calibrated −20 dBm signal whose frequency is the same as that noted for the average level in part b.

NOTE

If a power meter is used to monitor signal level, connect the power meter sensor at the RF INPUT.

e. Tune the signal to center screen and reduce the FREQ SPAN/DIV to either 1 MHz or 500 kHz.

f. Adjust band 2 Gain, R3034 (Fig. 3-49), for a full screen (−20 dBm) display.

g. Increase the FREQ SPAN/DIV to about 200 MHz and change the FREQUENCY RANGE to band 3 (3.0—7.1 GHz). Apply a calibrated −20 dBm signal at the frequency noted for the average level in part b.

h. Tune the signal to center screen and again decrease the span to about 500 kHz/Div with a RESOLUTION BANDWIDTH of 1 MHz.

i. Adjust band 3 Gain, R3030 (Fig. 3-49), for a full screen display.

j. Repeat the above procedure for each coaxial band (1—5) and set the gain of each with the appropriate adjustment (see Fig. 3-49). If the range of any adjustment is insufficient, add the appropriate diode (see schematics and Fig. 3-49) to obtain 10 dB more range. Adding the diode increases gain.

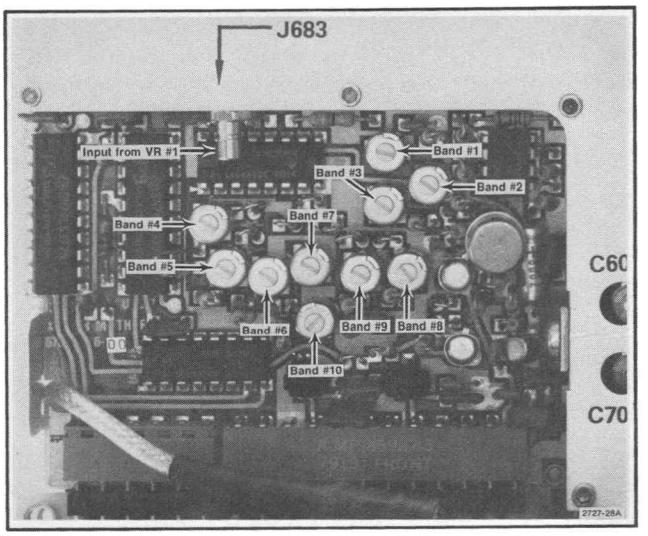

Fig. 3-49. Band leveling adjustments and gain diodes (when installed) on VR #2 module.

17. Band Leveling for Waveguide Bands (Bands 6—11)

a. Test equipment setup is shown in Fig. 3-50. Apply 2072 MHz at −58 dBm, through a dc-blocking capacitor to the EXT MIXER input. Monitor the input with a power meter to set the input level. Set the front panel controls as follows:

FREQUENCY RANGE	18—26 GHz (Band 6)
FREQ SPAN/DIV	200 MHz
AUTO RESOLUTION	On
REF LEVEL	−30 dBm

NOTE

The baseline of the display will rise when 2072 MHz signal is applied to the EXT MIXER input port connector.

b. With −58 dBm input level applied, adjust band 6 Gain Leveling, R3032 (Fig. 3-49), for full screen display.

Table 3-10

EXT MIXER BAND LEVELING ADJUSTMENTS

Band	Input Level	Gain Adjustment
6 (18—26 GHz)	−60 dBm	R3024
7 (26—40 GHz)	−60 dBm	R3026
8 (40—60 GHz)	−60 dBm	R3032
9 (60—90 GHz)	—	—
10 (90—140 GHz)	—	—
11 (140—220 GHz)	—	—

c. Change the FREQUENCY RANGE and input signal level as listed in Table 3-10. Adjust the appropriate Band Gain adjustments (Fig. 3-49) for full screen display.

d. Turn power off, replace VR module.

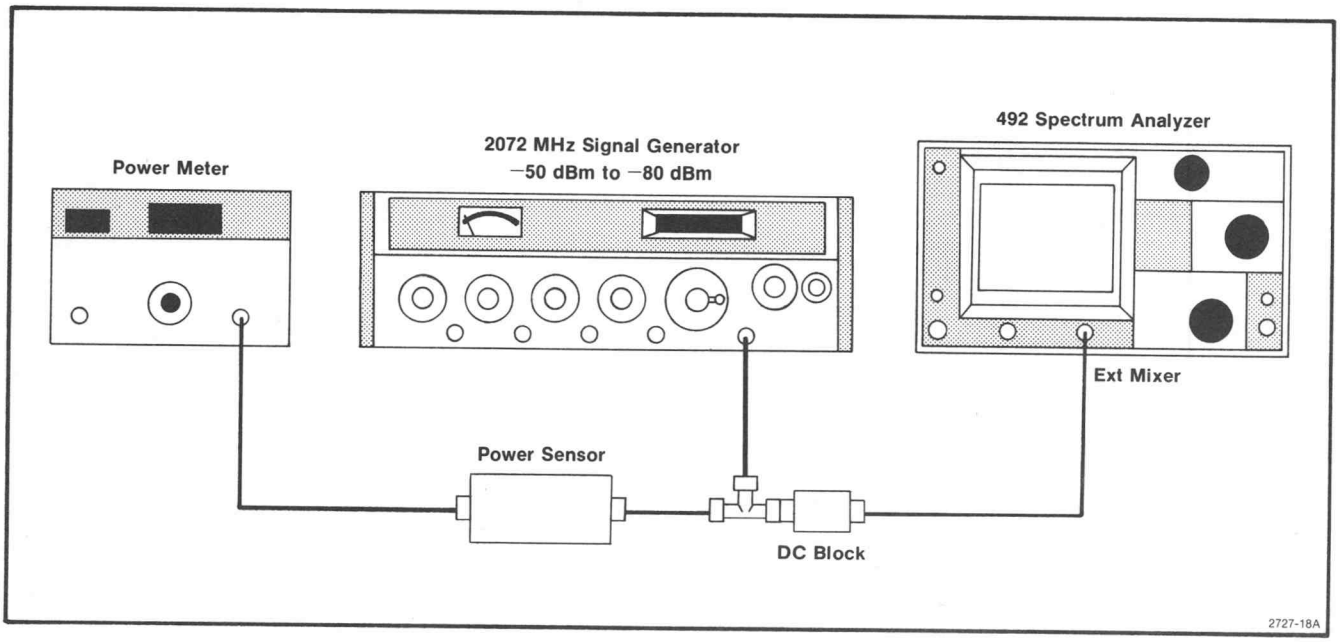

Fig. 3-50. Test equipment setup for calibrating band leveling of the external mixer bands.

18. Preselector Driver (Option 1) Calibration

a. Turn POWER off, pull Preselector Driver and install on extender board, (Fig. 3-51) then switch POWER on.

b. Set the offset for driver U2054. Offset should only require adjusting if U2054 is changed. It is adjusted as follows:

1. Set the FREQUENCY RANGE to band 1 (0—4.2 GHz).

2. Pull P3055 and connect a voltmeter between TP4054 and analog ground (Fig. 3-52). Voltmeter range should indicate 30 μV or less.

3. Adjust Driver Offset R2066 (Fig. 3-52) for 0 V.

4. Disconnect meter and replace P3055.

5. Turn POWER off, reinstall Preselector Driver board and switch POWER on.

c. Connect digital multimeter between center tap of PEAKING potentiometer and ground. Adjust the control for 0 V indication. If index on the knob is not aligned with the mark on the front panel, loosen knob and position the mark so it is aligned.

d. Apply the CAL OUT signal to the RF INPUT. Set the REF LEVEL to −30 dBm, FREQ SPAN/DIV to 20 MHz and activate AUTO RESOLUTION. Select the 1.7 to 5.5 GHz FREQUENCY RANGE and adjust the FREQUENCY to center the 2.1 GHz marker. Center Input Offset adjustment R1031 (Fig. 3-52), press DEGAUSS button, and then center the 2.1 GHz marker on screen with the FREQUENCY control.

e. Ground TP1069 (Fig. 3-52) with a jumper strap and adjust the Preselector Offset (R1064) for maximum response of the 2.1 GHz signal. Remove the grounding strap and press DEGAUSS button.

f. Peak the 2.1 GHz signal with the −829 MHz IF Offset, R1049 (Fig. 3-52).

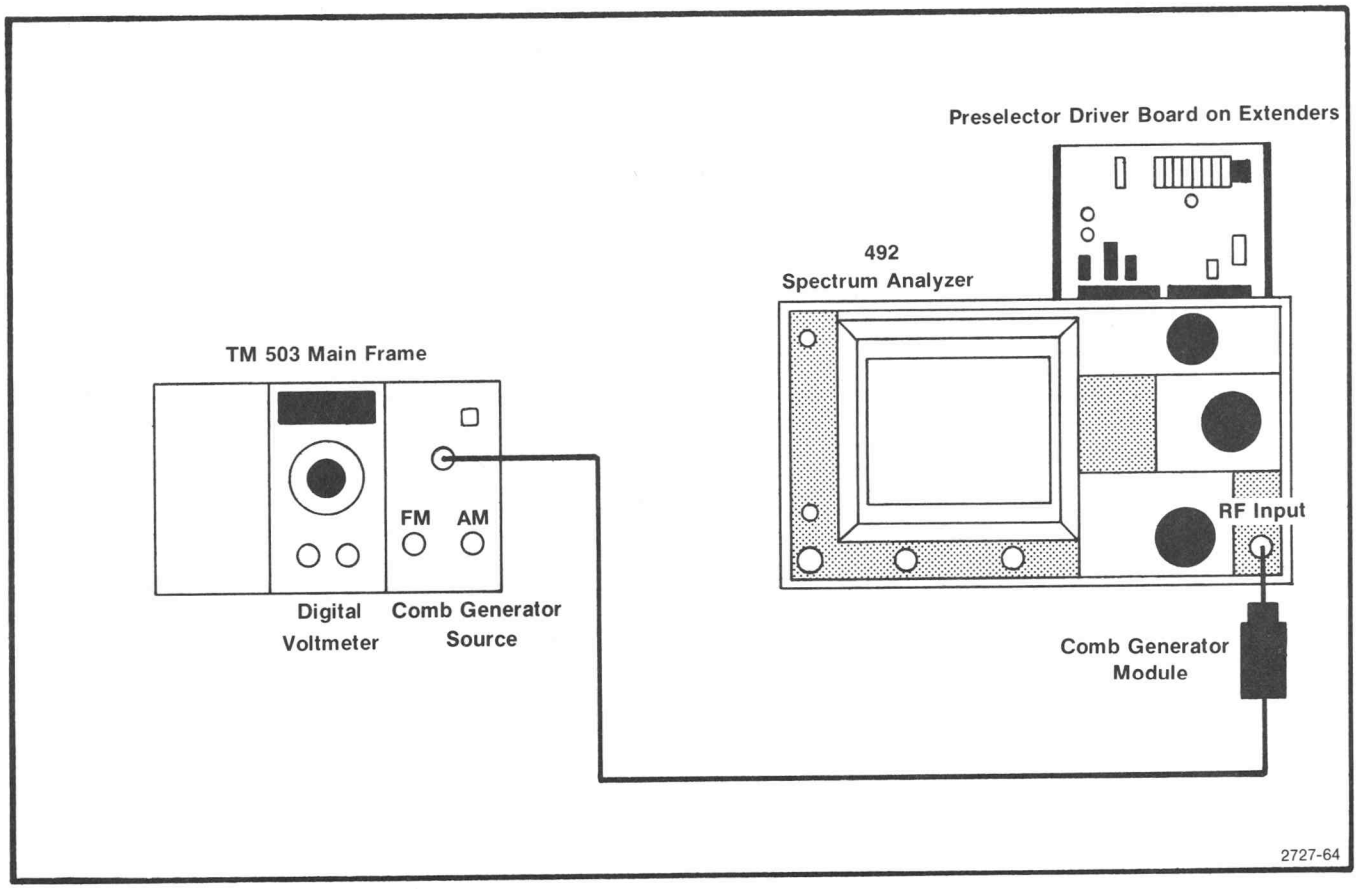

Fig. 3-51. Test equipment setup for calibrating Preselector Driver.

g. Remove the Calibrator signal to the RF INPUT and connect the output of the microwave comb generator to the RF INPUT (see Fig. 3-51). Change the REF LEVEL to 0 dBm. Now tune the CENTER FREQUENCY to 5.5 GHz and center the 5.5 GHz comb marker on screen. Press DEGAUSS, then recenter the 5.5 GHz signal.

h. Peak the 5.5 GHz signal with Preselector Sense (R1065) adjustment.

i. Repeat parts f through h to ensure the 2.1 and 5.5 GHz frequency points track the input tuning.

j. Change the FREQUENCY RANGE to band 4 (5.4—18.0 GHz). Center the 6 GHz marker on screen with the FREQUENCY control, then press the DEGAUSS button.

k. Peak the 6 GHz signal with the front panel PEAKING control, then adjust FREQUENCY to center the 9 GHz marker on screen. Peak this response with the X3 Gain (R1052) adjustment.

l. Repeat parts j through k to ensure tracking over this range.

m. Increase FREQUENCY to the 12 GHz marker, press DEGAUSS, then peak the 12 GHz point with Shaper #1 (R1054) adjustment (Fig. 3-52).

n. Adjust FREQUENCY to center the 17 GHz marker, press DEGAUSS, then peak the signal with Shaper #2 (R1056) adjustment.

o. Recheck the 6, 9, 12, and 17 GHz points to verify that they all peak at the same position of the front panel PEAKING control. If they do not, repeat parts g through n.

p. Change the FREQUENCY RANGE to the 1.7—5.5 GHz band. Center a comb marker between 5.4 and 5.5 GHz, press DEGAUSS, then peak the signal with the front panel PEAKING control.

q. Change FREQUENCY RANGE to the 5.4—18.0 GHz band and center the same signal used in part p with the FREQUENCY control. Press DEGAUSS, then adjust Input Offset (R1031) to peak the signal.

r. Repeat parts p through q until signal amplitude peaks on both bands occur at the same position of the PEAKING control.

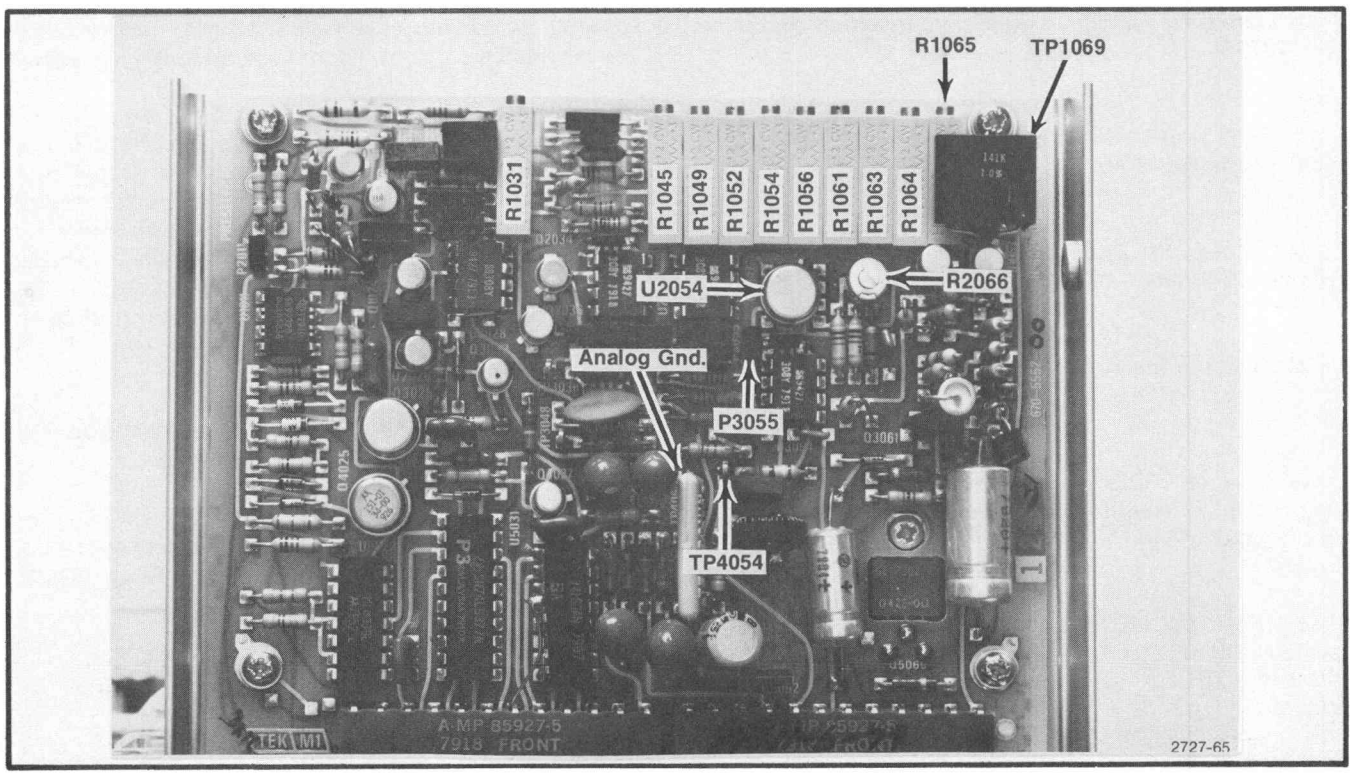

Fig. 3-52. Preselector Driver adjustments and test points.

s. Position the PEAKING control to align index mark with the front panel mark. Change FREQUENCY RANGE to 1.7—5.5 GHz, adjust FREQUENCY to center the 3.5 GHz comb marker, then press DEGAUSS.

t. Adjust −829 MHz IF Offset, R1049 (Fig. 3-52), to peak the 3.5 GHz response.

u. Change FREQUENCY RANGE to 3.0—7.1 GHz and center 5.0 GHz marker signal on screen with the FREQUENCY control after the DEGAUSS button has been pressed.

v. Peak the 5.0 GHz signal with the +829 MHz IF Offset (R1045) adjustment.

w. Change FREQUENCY RANGE to 15—21 GHz and adjust FREQUENCY to center 15 GHz marker on screen. Press the DEGAUSS button as signal is tuned to center screen.

x. Peak the 15 GHz signal with the front panel PEAKING control.

y. Tune the 19 GHz marker to center screen, and press DEGAUSS.

z. Peak the 19 GHz signal with Shaper #3 (R1061) adjustment (Fig. 3-48).

aa. Tune to the 21 GHz marker, degauss, then peak the signal with Shaper #4 (R1063) adjustment.

ab. Recheck the 15, 19, and 21 GHz points to verify that they all peak at the same position of the PEAKING control.

ac. Change FREQUENCY RANGE to 5.4—18 GHz, then center the 15 GHz marker on screen. Degauss as the signal is centered.

ad. Peak the signal with the PEAKING control, then switch FREQUENCY RANGE to the 15—21 GHz and center the same 15 GHz marker on screen. Press the DEGAUSS button.

ae. Peak the 15 GHz signal with Preselector Offset (R1064) if necessary.

af. Change FREQUENCY RANGE to 3.0—7.1 GHz and center a 5.0 GHz signal on screen. Press DEGAUSS as the signal is centered.

ag. Peak the signal with the +829 MHz IF (R1045) adjustment.

ah. Change to the 1.7—5.5 GHz band and center a 3.5 GHz marker on screen after degaussing.

ai. Peak the 3.5 GHz signal with the −829 MHz IF (R1049) adjustment.

aj. All bands should now track. The signal peak with the front panel PEAKING control should occur with the knob index marker near the front panel mark.

19. Phase Lock Calibration

The phase lock assembly normally requires calibration only after some part of the assembly has been repaired or replaced. Phase noise, produced by the phase lock loop, is specified for −70 dBc or better 3 kHz out from the response. This should be checked before calibrating the assembly.

a. Test equipment setup is shown in Fig. 3-53. Remove the Phase Lock module and the two cover plates so all circuit test points and adjustments are accessible. Plug the assembly on extender boards and into the instrument. Use extender cables and adapters to reconnect signal cables to their respective connector (cable with yellow band to J501, cable with black band to J502, and cable between J500 and J511 on Phase Lock Control board).

b. Switch the 492 POWER on, set the TIME/DIV to MNL, FREQ SPAN/DIV to 50 kHz, and Phase Lock on.

c. Check Offset Mixer—This part of the procedure is only required after repair or replacement of the Mixer board.

1. Connect the Direct Input of a frequency counter to pin N (Fig. 3-54A) and adjust the counter controls for a count. Note the frequency.

2. Connect the counter to pin K and note the frequency.

3. Connect the counter to the collector of Q1040 and note the frequency. Frequency should equal the difference between pins N and R (e.g., 25.080—25.00 = 80 kHz). Disconnect the counter probe from the collector of Q1040.

4. Connect the probe of a test oscilloscope to the collector of Q1040 and check for a 50% duty cycle.

d. Check Controlled Oscillator Frequency—This part of the check is only required after repair or replacement of the Controlled Oscillator board.

1. Connect the Direct Input of the frequency counter to TP2011 (Fig. 3-54A). Ground pin L on the Offset Mixer board.

2. Connect an 80 K resistor in series with a 2 K variable potentiometer from pin H to ground, then adjust the variable resistor for a voltage reading of 12.0 ±0.1 V at pin H.

3. Adjust C1013 (Fig. 3-54A) for a frequency of 25.10 MHz.

4. Now replace the 80 K resistor with a 4 K resistor and adjust the variable resistor for a reading of 5.75 ±0.1 V at pin H.

5. Adjust C2011 (Fig. 3-54A) for a frequency of 25.032 MHz.

6. Repeat sub-parts 3 through 5 until the oscillator range is 25.100 to 25.032 MHz.

e. Error Amplifier Adjustment—This part of the procedure sets loop gain and error count break point. This part is required when either the Phase Lock assembly, 1st LO, Phase Detector, or Error Amplifier is replaced.

1. Set the TIME/DIV to 1 s, FREQUENCY RANGE to band 2 (1.7 to 5.5 GHz) PHASE LOCK on, FREQUENCY SPAN/DIV to 50 kHz, and AUTO RESOLUTION on.

2. Pull P3057 (Fig. 3-54B); this turns the strobe to the Phase Gate on. Turn Loop Gain R3082 fully ccw. Pull and install P2035 between pins 2 and 3.

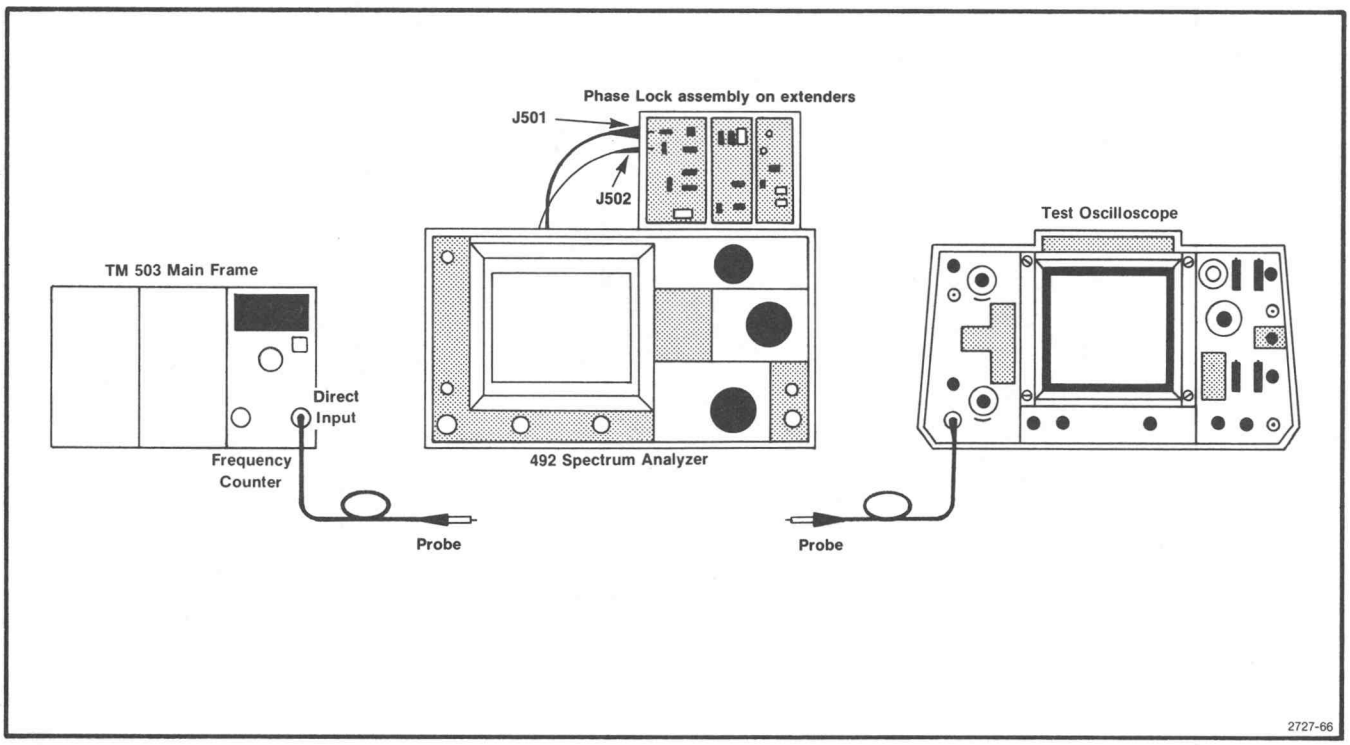

Fig. 3-53. Test equipment setup for calibrating Phase Lock assembly.

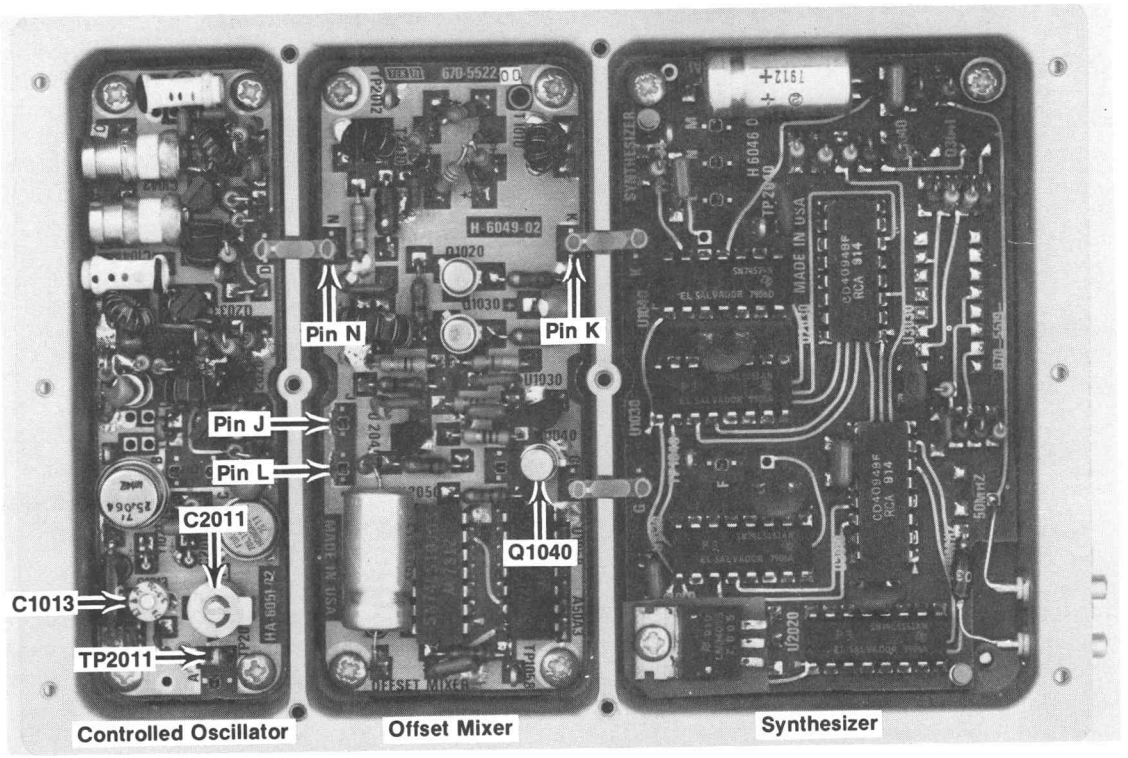

A. Synthesizer, Offset Mixer, and Controlled Oscillator.

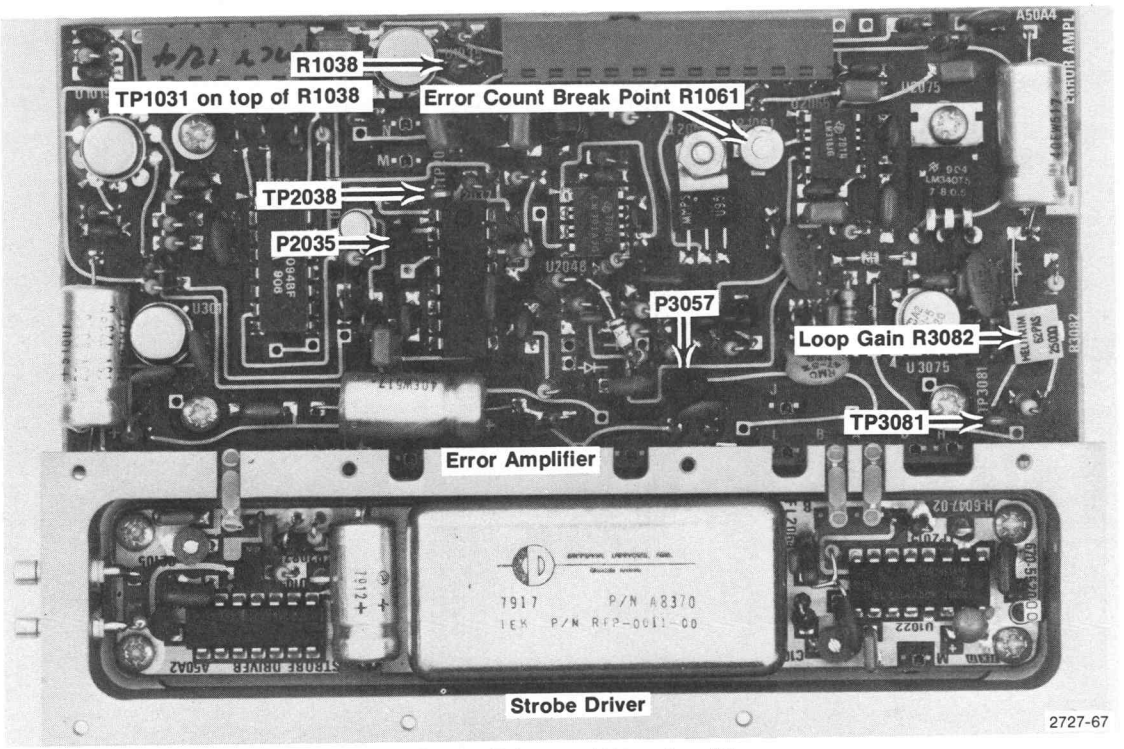

B. Strobe Driver and Error Amplifier.

Fig. 3-54. Adjustments and test points locations in the Phase Lock module.

3. Connect the test oscilloscope probe to TP3081 (Fig. 3-50B) and trigger the test oscilloscope on the signal at TP2038 (U2048-6) shown in Fig. 3-54B. Set the Time/Div to 5 ms and Volts/Div to 0.5 V. Note the beat notes. Beat notes are produced by the difference between strobes from the phase lock (one every 5 MHz) and the particular frequency the 1st LO is tuned to.

4. Turn Loop Gain R3082 clockwise slowly and note the amplitude of the beat notes prior to lock. This usually occurs between 0.5 V and 1.5 V peak-to-peak. The beat notes will disappear when lock occurs.

5. Turn Loop Gain R3082 full clockwise, increase FREQ SPAN/DIV to MAX, set RESOLUTION BANDWIDTH to 100 Hz, and TIME/DIV to AUTO.

6. As the sweep scans across the span, note the position of the smallest beat note. Tune the center FREQUENCY to position the frequency dot at this location.

7. Reduce the FREQ SPAN/DIV to 100 MHz. Set TIME/DIV to 1 s and activate VIEW A if the instrument has digital storage.

8. Adjust Loop Gain until the beat note amplitude is 1.5 times the amplitude noted in part 4 of this step. If this does not occur, it is an indication the Phase Gate is defective.

9. Change the TIME/DIV to MNL, deactivate VIEW A/VIEW B, reduce the FREQUENCY SPAN/DIV to 50 kHz then increase to 100 kHz and center the crt beam on screen with the MANUAL SCAN control. Now adjust FREQUENCY for a null (zero frequency) of the display on the test oscilloscope.

10. Adjust MANUAL SCAN to position the crt beam four divisions from the center screen reference (four divisions represents 400 kHz).

11. Monitor and trigger the test oscilloscope on TP1031 on top of R1038 (Fig. 3-54B) and adjust the Error Count Breakpoint potentiometer R1061, from its mid-range position, clockwise until the display just starts to break up.

12. Move the crt beam four divisions to the other side of center, with the MANUAL SCAN control and note that the square wave response again starts to break up 400 kHz from center. As the beam crosses center, the display on the test oscilloscope should go through a null. If no null is found, re-adjust center frequency. Adjust R1061, if necessary, so break points are 400 kHz either side of the null at center screen.

13. Reconnect P2035 between pins 1 and 2, and install P3057. Disconnect the test oscilloscope trigger and probe connections. Insure that P2035 and P3057 are installed correctly; their absence will produce spurious responses on the display.

14. Reduce FREQ SPAN/DIV to 50 kHz and ensure phase lock occurs.

15. Replace the covers on the assembly and re-install the module in the 492.

16. Perform the phase lock noise check as described in the Performance Check part.

This concludes the Adjustment Procedure. Repeat the appropriate Performance Check to verify specification.

MAINTENANCE

Introduction

This section describes the procedure for reducing or preventing instrument malfunction, plus troubleshooting, and corrective maintenance. Preventive maintenance improves instrument reliability. Should the instrument fail to function properly, corrective measures should be taken immediately; otherwise, additional problems may develop within the instrument.

Static-Sensitive Components

CAUTION

Static discharge can damage any semiconductor component in this instrument.

This instrument contains electrical components that are susceptible to damage from static discharge. See Table 4-1 for relative susceptibility of various classes of semiconductors. Static voltages of 1 kV to 30 kV are common in unprotected environments.

Observe the following precautions to avoid damage:

1. Minimize handling of static-sensitive components.
2. Transport and store static-sensitive components or assemblies in their original containers, on a metal rail, or on conductive foam. Label any package that contains static-sensitive assemblies or components.
3. Discharge the static voltage from your body by wearing a wrist strap while handling these components. Servicing static-sensitive assemblies or components should be performed only at a static-free work station by qualified service personnel.
4. Nothing capable of generating or holding a static charge should be allowed on the work station surface.
5. Keep the component leads shorted together whenever possible.
6. Pick up components by the body, never by the leads.
7. Do not slide the components over any surface.
8. Avoid handling components in areas that have a floor or work-surface covering capable of generating a static charge.
9. Use a soldering iron that is connected to earth ground.
10. Use only special antistatic suction type or wick type desoldering tools.

Table 4-1

RELATIVE SUSCEPTIBILITY TO STATIC DISCHARGE DAMAGE

Semiconductor Classes	Relative Susceptibility Levels[a]
MOS OR CMOS microcircuits or discretes, or linear microcircuits with MOS inputs. (Most Sensitive)	1
ECL	2
Schottky signal diodes	3
Schottky TTL	4
High-frequency bipolar transistors	5
JFETs	6
Linear microcircuits	7
Low-power Schottky TTL	8
TTL (Least Sensitive)	9

[a] **Voltage equivalent for levels:**

1 = 100 to 500 V 4 = 500 V 7 = 400 to 1000 V (est.)
2 = 200 to 500 V 5 = 400 to 600 V 8 = 900 V
3 = 250 V 6 = 600 to 800 V 9 = 1200 V

(Voltage discharged from a 100 pF capacitor through a resistance of 100 ohms.)

PREVENTIVE MAINTENANCE

Preventive maintenance consists of cleaning, visual inspection, performance check, and if needed, a recalibration. The preventive maintenance schedule that is established for the instrument should be based on the environment in which the instrument is operated and the amount of use. Under average conditions (laboratory situation) a preventive maintenance check should be performed every 1000 hours of instrument operation.

Elapsed Time Meter

A 5000 hour elapsed time indicator, graduated in 500 hour increments is installed on the Z Axis/RF Interface circuit board. This provides a convenient way to check operating time. The meter on new instruments may indicate from 200 to 300 hours elapsed time. Most instruments go through a factory burn-in time to improve reliability. This is similar to using aged components to improvement reliability and operating stability.

Cleaning

Clean the instrument often enough to prevent dust or dirt from accumulating in or on it. Dirt acts as a thermal insulating blanket and prevents efficient heat dissipation. It also provides high resistance electrical leakage paths between conductors or components in a humid environment.

Exterior. Clean the dust from the outside of the instrument by wiping or brushing the surface with a soft cloth or small brush. The brush will remove dust from around the front panel selector buttons. Hardened dirt may be removed with a cloth dampened in water that contains a mild detergent. Abrasive cleaners should not be used.

Interior. Clean the interior by loosening accumulated dust with a dry soft brush, then remove the loosened dirt with low pressure air to blow the dust clear. (High velocity air can damage some components.) Hardened dirt or grease may be removed with a cotton tipped applicator dampened with a solution of mild detergent in water. Do not leave detergent on critical memory components. Abrasive cleaners should not be used. If the circuit board assemblies need cleaning, remove the circuit board by referring to the instructions under Corrective Maintenance in this section.

After cleaning, allow the interior to thoroughly dry before applying power to the instrument.

CAUTION

Do not allow water to get inside any enclosed assembly or components such as the hybrid assemblies, RF Attenuator assembly, potentiometers, etc. Instructions for removing these assemblies are provided in the Corrective Maintenance section. Do not clean any plastic materials with organic cleaning solvents such as benzene, toluene, xylene, acetone or similar compounds because they may damage the plastic.

Lubrication

Components in this instrument do not require lubrication.

Service Fixtures and Tools for Maintenance

The following kits and fixtures are available to aid in servicing the 492:

Nomenclature	Tektronix Part No.
Service Kit; consisting of:	006-3286-00
1 Front panel extender	067-0973-00
1 Power module extender	067-0971-00
1 Accessories Interface extender	067-0972-00
1 Ribbon cable	175-2901-00
3 Coaxial cables, Sealectro male-to-Sealectro female	175-2902-00
1 VR module handle	367-0285-00
1 Circuit board extender assembly kit; consisting of:	672-0865-00
1 Left extender board	670-5562-00
2 Right extender boards	670-5563-00
1 Frame (extrusion for circuit board extender)	426-1527-00
6 Screws, panhead with flat and lockwashers	211-0116-00

In addition to the above, the following tools are recommended:

Screwdriver, flat, with 1/4 to 3/8-inch bit.

Screwdriver, Posidrive® 440-2.

Wrench, 5/16-inch open end (used to remove or replace semi-rigid coaxial cable connectors).

Hex drive wrenches, 3/32, 5/64, 7/64-inch (used to remove hex screws that hold module assemblies and their covers in place).

Visual Inspection

After cleaning, carefully check the instrument for such defects as defective connections, damaged parts, and improperly seated transistors and integrated circuits. The remedy for most visible defects is obvious; however, if heat-damaged parts are discovered, try to determine the cause of overheating before the damaged part is replaced; otherwise, the damage may be repeated.

Transistor and Integrated Circuit Checks

Periodic checks of the transistors and integrated circuits are not recommended. The best measure of performance is the actual operation of the component in the circuit. Performance of these components is thoroughly checked during the performance check or recalibration; any sub-standard transistors or integrated circuits will usually be detected at that time.

When handling MOS FET's, keep the shorting strap in place until the transistor is in its socket.

Performance Checks and Recalibration

The instrument performance should be checked after each 1000 hours of operation or every six months if the instrument is used intermittently to ensure maximum performance and assist in locating defects that may not be apparent during regular operation. Instructions for conducting a performance check are provided in the Performance Check part of the Calibration section.

TROUBLESHOOTING

The following are a few aids and suggestions that may assist in locating a problem. After the defective assembly or component has been located, refer to the Corrective Maintenance part of this section for removal and replacement instructions.

Troubleshooting Aids

Diagrams. Block and circuit diagrams, on foldout pages in the Diagrams section, contain any significant waveform, voltage, and logic data information. Any necessary information as to how the data was acquired, such as operational state of the instrument, is provided on the diagram or adjacent to it. Refer to the Replaceable Electrical Parts list section for a description of all assemblies and components.

NOTE

Corrections and modifications to the manual and instrument are described on inserts bound into the rear of the manual. Check this section for changes and corrections to the manual or the instrument.

Circuit Board Illustrations. Electrical components, connectors, and test points are identified on circuit board illustrations located on the inside fold of the corresponding circuit diagram or the back of the preceding diagram. A grid on the circuit board illustrations as well as the circuit schematic plus a look-up table, provides the means to quickly locate components on either diagram.

Wiring Color Code. Color coded wires are used to aid circuit tracing. Power supply dc voltage leads have either a red background for positive voltage or a violet background for negative voltage. Signal wires and coaxial cables use an identifying one-band or two-band color code.

Multiple Terminal (Harmonica) Connectors. Some intercircuit connections are made through pin connectors that may be mounted in a harmonica type holder. The terminals in the holder are identified by numbers that appear on the holder and the circuit diagrams. Connector orientation to the circuit board is keyed by triangles on the holder and the circuit board (see Fig. 4-1). In some cases, the triangle or arrow is screened on the chassis adjacent to the connector. Some connectors contain more than one section. Connectors are identified on the schematic and board with a "P" or "J".

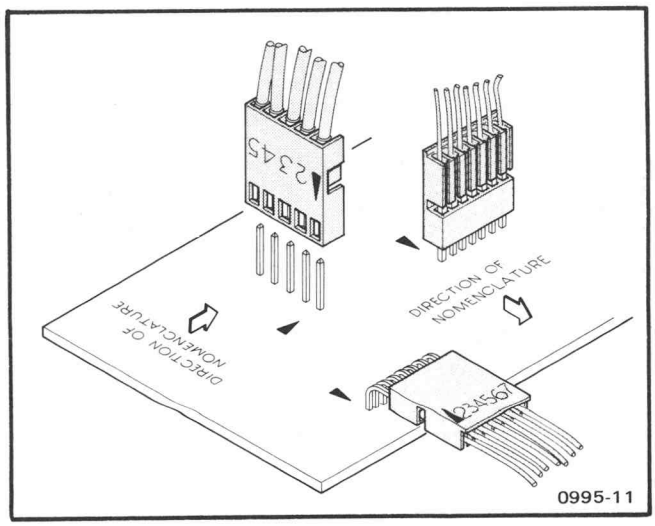

Fig. 4-1. Multipin (harmonica) connector configuration.

Resistor Values. Many types of resistors (such as composition, metal film, tapped, thick film resistor network package, plate, etc.) are used in the 492. The value is either color coded in accordance with the EIA color code, or printed on the body of the component.

Capacitor Marking. The capacitance value of ceramic disc plate and slug capacitors or small electrolytics are marked in microfarads on the side of the component body. The ceramic tubular capacitors and feedthrough capacitors are color coded in picofarads. Tantalum capacitors are color coded as shown in Fig. 4-2.

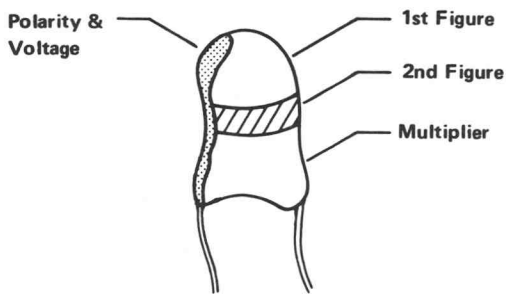

DIPPED TANTALUM CAPACITOR MARKING

A AND B CASE

CAPACITANCE AND VOLTAGE COLOR CODE

Rated Voltage VDC 25°C	Color	CODE FOR CAPACITANCE IN PICOFARADS		
		1st Figure	2nd Figure	Multiplier
3-4	Black	0	0	None
3-6	Brown	1	1	X10
3-10	Red	2	2	$X10^2$
3-15	Orange	3	3	$X10^3$
3-20	Yellow	4	4	$X10^4$
3-25	Green	5	5	$X10^5$
3-35	Blue	6	6	$X10^6$
3-50	Violet	7	7	$X10^7$
	Gray	8	8	
3	White	9	9	

(1733) 1735-9

Fig. 4-2. Color code for some tantalum capacitors.

Diode Color Code. The cathode of each glass encased diode is indicated by a stripe, a series of stripes, or a dot. Some diodes have a diode symbol printed on one side. Figure 4-3 illustrates diode types and polarity markings that are used in this instrument.

Transistor and Integrated Circuit Electrode Configuration. Lead identification for the transistors and MOS FET's is shown in Fig. 4-4. IC pin outs are shown either by table or box on the schematic diagram.

Semiconductor failures account for the majority of electronic equipment failures. Most semiconductors are soldered to the boards. The following guidelines should be observed when substituting these components.

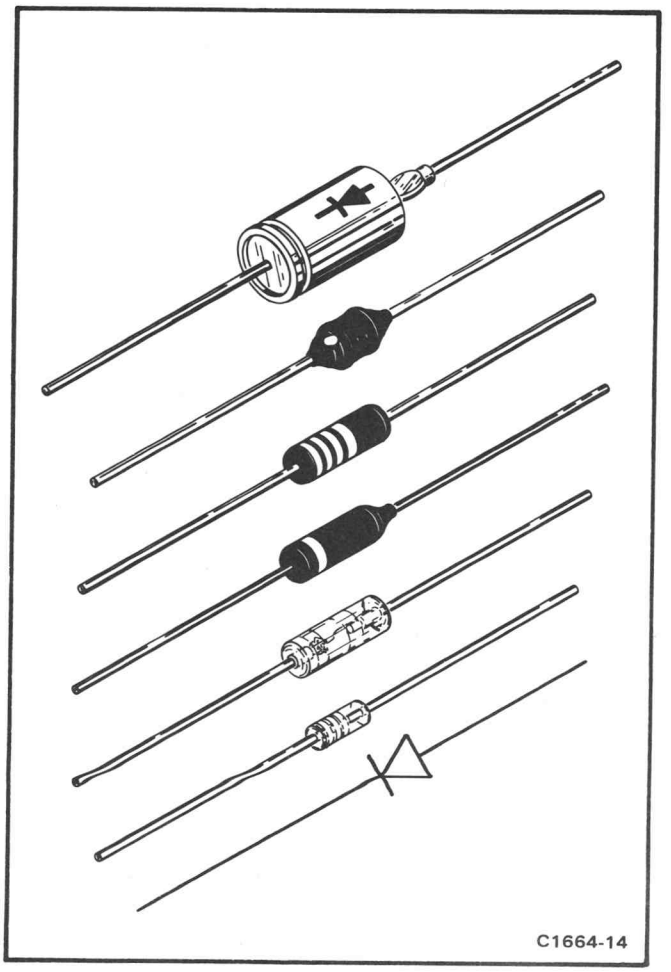

Fig. 4-3. Diode polarity markings.

NOTE

Before using any test equipment to make measurements on static-sensitive components or assemblies, be certain that any voltage or current supplied by the test equipment does not exceed the limits of the component to be tested.

a. Try to isolate the problem to a component through signal analyses. Determine that circuit voltages will not damage the replacement.

b. Turn power off before removing a component.

c. Use a de-soldering tool and 25 watt or less soldering iron to remove the component.

d. Use only good components for substitution and be sure the new component is inserted into the socket properly before soldering. Refer to the manufacturers data sheet or Fig. 4-3 for lead configuration.

e. Turn power on and check performance.

NOTE

If a substitute is not available, check the transistor or MOS FET with a dynamic tester such as the TEKTRONIX Type 576 Curve Tracer. Static type testers, such as an ohmmeter, can be used to check the resistance ratio across some semiconductor junctions if no other method is available. (Do not measure resistance across MOS FET's because they are very susceptible to static charges.) Use the high resistance ranges (R X 1 k or higher) so the external test current is limited to less than 6 mA. If uncertain, measure the external test current with an ammeter. Resistance ratios across base-to-emitter or base-to-collector junctions usually run 100:1 or higher. The ratio is measured by connecting the meter leads across the terminals, noting the reading, then reversing the leads and noting the second reading.

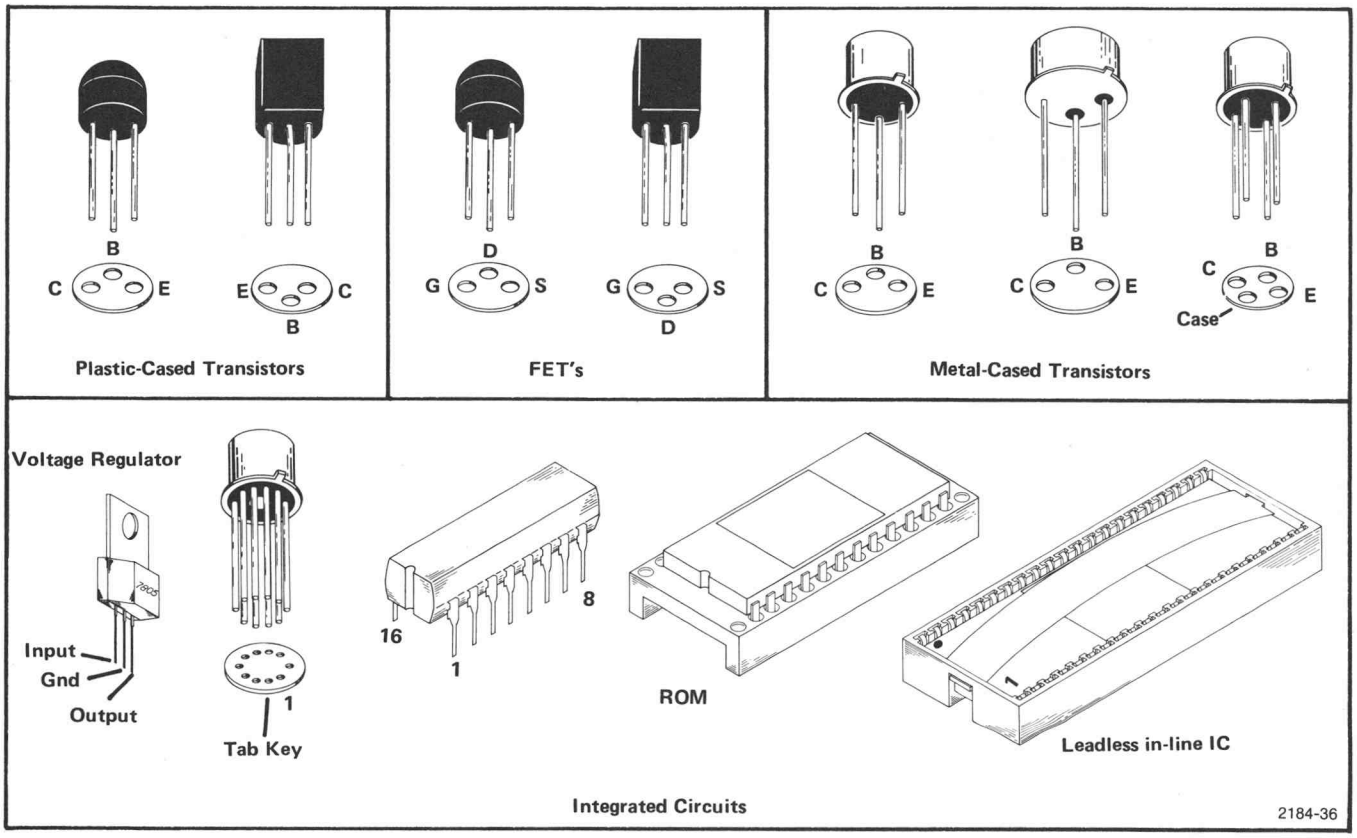

Fig. 4-4. Electrode configuration for semiconductor components.

Diode Checks. Most diodes can be checked in the circuit by taking measurements across the diode and comparing these with voltages listed on the diagram. Forward-to-back resistance ratios can usually be taken by referring to the schematic and pulling appropriate transistors and pin connectors to remove low resistance loops around the diode.

CAUTION

Do not use an ohmmeter scale with a high external current to check the diode junction. Do not check the forward-to-back resistance ratios of mixer diodes. See Replacing the Dual Diode Assembly instructions under Replacing Assemblies.

General Troubleshooting Technique

The following procedure is recommended to isolate a problem and expedite repairs.

1. Ensure that the malfunction exists in the instrument. Check the operation of associated equipment and the operating procedure of the 492 (see Operating Instructions).

2. Determine and evaluate all trouble symptoms. Try to isolate the problem to a circuit or assembly. For example: Absence of the frequency marker dot could indicate a malfunction in the video summing stage, the marker generator, or the switching circuitry. A test oscilloscope will check the input to the video summing stage and isolate the problem to one or the other of the two circuits. The block diagrams in the Diagrams section can aid in signal tracing and circuit isolation. It also shows the required signal level at different points to produce full screen deflection.

Block diagrams are provided in three levels. The first level shows all major circuit systems for the 492, the second level shows detail block diagrams of each system, such as the phase lock system, and the third level shows a block diagram of a given circuit or circuit board within the system. Levels two and three block diagrams usually contain signal and voltage levels for each stage.

CAUTION

When measuring voltages and waveforms, use extreme care in placing meter leads or probes. Because of high component density and limited access within the instrument, an inadvertent movement of the leads or probe could cause a short circuit. This may produce transient voltages which can destroy many components.

3. Make an educated guess as to the nature of the problem such as component failure or calibration, and the functional area most likely at fault.

4. Visually inspect the area or the assembly for such defects as broken or loose connections, improperly seated components, overheated or burned components, chafed insulation, etc. Repair or replace all obvious defects. In the case of overheated components, try to determine the cause of the overheated condition and correct before applying power.

5. By successive electrical checks, locate the problem. At this time an oscilloscope or signature analyzer is a valuable test item for evaluating circuit performance. If applicable, check the calibration adjustments. Before changing an adjustment, note its position so it can be returned to its original setting. This will facilitate recalibration after the trouble has been located and repaired.

6. Determine the extent of the repair needed; if complex, we recommend contacting your local Tektronix Field Office or representative. If minor, such as a component replacement, see the Replaceable Parts list for replacement information. Removal and replacement procedure of the assemblies and sub-assemblies is described under Corrective Maintenance.

CORRECTIVE MAINTENANCE

Corrective maintenance consists of component replacement and instrument repair. Special techniques and procedures required to replace components in this instrument are described here.

Obtaining Replacement Parts

All electrical and mechanical parts are available through your local Tektronix Field Office or representative. The Replaceable Parts list section contains information on how to order these replacement parts.

NOTE

Some components that are heat sinked to the circuit board extrusion or module wall, are soldered to the board after the board is mounted in place. This is necessary to avoid cracking the IC case when the mounting screw is tightened. These components are identified by a note on the schematic drawing. Their part number appears with chassis mounted components in the Replaceable Electrical Parts list.

Parts orientation and lead dress should be duplicated because some components are oriented to reduce interaction or control circuit characteristics.

If a part you have ordered has been replaced with a new or improved part, your local Field Office or representative will contact you concerning any change in the part number. After repair, the circuits may need recalibration.

Parts Repair and Return Program

Assemblies containing hybrid circuits or substrates in a semi-sealed module, complex assemblies such as the YIG oscillator, 829 MHz converter assembly, or phase gate detector can be returned to Tektronix for repair under the repair and return program. Contact your local Field Office for exchange rates.

Tektronix repair centers provide replacement or repair service on major assemblies as well as the unit. Return the instrument or assembly to your local Field Office for this service.

Soldering Technique

CAUTION

Disconnect the instrument from its power source before replacing or soldering components.

Some of the circuit boards in this instrument are multilayer; therefore, extreme caution must be used when a soldered component is removed or replaced. Excess heat from the soldering iron and bent component leads may pull the plating out of the hole. We suggest clipping the old component free. Leave enough lead length so the new component leads can be soldered in place. If you desire to remove the component leads, use a 15 watt or less pencil type iron. Straighten the leads on the back side of the board; then when the solder melts, gently pull the soldered lead through the hole. A desoldering tool should be used to remove the old solder.

Replacing the Square Pin for the Multi-pin Connectors

It is important not to damage or disturb the ferrule when removing the old stub of a broken pin. The ferrule is pressed into the circuit board and provides a base for soldering the pin connector.

If the broken stub is long enough, grasp it with a pair of needle nose pliers, apply heat with a small soldering iron to the pin base of the ferrule, and pull the old pin out. (The pin is pressed into the ferrule so a firm pull is required to pull it out.)

If the broken stub is too short to grasp with pliers, use a small dowel (0.028 inch in diameter) clamped in a vise to push the pin out of the ferrule after the solder has been heated.

The old ferrule can be cleaned by reheating the solder and placing a sharp object such as a toothpick or small dowel into the hole. A 0.031 inch drill mounted in a pin vise may also be used to ream the solder out of the old ferrule.

Use a pair of diagonal cutters to remove the ferrule from the new pin; then insert the pin into the old ferrule and solder the pin to both sides of the ferrule.

If it is necessary to bend the new pin, grasp the base of the pin with needle nose pliers and bend against the pressure of the pliers to avoid breaking the board around the ferrule.

Selected Components

Some components, such as microcircuits, are selected to meet Tektronix specifications. These components carry only Tektronix part numbers under the Mfr Part number column, in the Replaceable Parts list.

Some circuits require a selected component value to compensate for parameter differences between active components. These are identified on the circuit diagram and the Replaceable Parts list. The Replaceable Parts list description for the component gives either a nominal value or range of value. If the procedure for selection is not obvious or complex, such as setting the gain or response of a stage, the criteria for selection is explained in the Calibration or Maintenance section of the manual. Where the selection procedure is obvious, such as establishing the frequency of an oscillator, no procedure is given.

Installing Matched Crystals for the VR Filters

The crystals for the 100 Hz filter circuit of the VR assembly are matched. The four crystals come with rubber tie-down straps. Plug the matched crystals on the two boards, insert the rubber tie-down into the two holes provided on either side of the crystal on the board and pull through until the crystal is held in place by the tension of the rubber tie-down.

Replacing EPROM's or ROM's

Firmware for the microcomputer is contained in ROM's on the Memory and GPIB board. Refer to the Replaceable Electrical Parts list (Vol. 2) under these assemblies (A54 Memory, and A56 GPIB) for the versions and IC part numbers.

If the instrument has 670-XXXX-00 Front Panel board, the #3 switch of the DIP switch on the Memory board (see Fig. 4-11) must be in the open position. With later front panels, 670-XXXX-02 and up, the switch is in its normal closed position.

Firmware Version and Error Message Readout

This feature of the 492 provides readout of the firmware version when the power on/off is cycled. During the initial power-up cycle, the firmware version flashes on screen for approximately two seconds. The Replaceable Electrical Parts list section, under Memory board (A54), lists the ROM's and their Tektronix part number for each firmware version.

An additional feature is error message readout. The following is a list of these messages and their meaning.

Error #	Meaning
57	Tune routine failed in carry from lower DAC.
58	Failed to phase lock.
59	Lost lock.
60	Failed to recenter when phase lock cancelled or when going to an unlocked span.

Servicing the VR Module

The VR module requires mechanical support when it is installed on board extenders. Mechanical support is provided by moving the mounting plate at the upper side of the module (Fig. 4-5A) to the bottom side. This allows installation of a mounting screw through a support bracket into the mounting plate screw hole as shown in Fig. 4-5B.

REPLACING ASSEMBLIES AND SUBASSEMBLIES

Most assemblies or sub-assemblies in this instrument are easily removed and replaced. The following describes procedures for replacing those assemblies that require special attention. Top and bottom views of the 492 with Options 1, 2, and 3, are shown in Fig. 4-6 and 4-7. These figures identify most assemblies by name and assembly number.

Removing or Replacing Semi-rigid Coaxial Cables

Performance of the instrument is easily degraded if these connectors are loose, dirty, or damaged. The following procedure will help ensure good performance.

1. Use a 5/16 inch open-end wrench to loosen or tighten the connectors. When loosening, it is good practice to use a second wrench to hold the rigid (receptacle) portion of the connector to prevent bending or twisting the cable. Tighten slightly more than finger tight or until the cable just starts to twist.

2. Ensure that the plug and receptacle are clean and free of any foreign matter.

3. Insert the plug connector fully into the receptacle before screwing the nut on.

Replacing the Dual Diode Assembly

The diode sub-assembly housing the Schottky mixer diodes, permits easy field replacement of the diodes.

CAUTION

The diodes are beam-lead devices mounted on a quartz suspended substrate; these diodes are extremely static sensitive. Refer to the Caution note on static that precedes this section. Do not expose the diode assembly to any RF field.

The diode sub-assembly is secured in place with four 0-80 screws. An 8-32 threaded hole is provided to facilitate insertion and removal of the sub-assembly. There are three contact points located on the substrate side of the sub-assembly. Use care when mounting and orienting these contacts with the mating contacts in the mixer assembly to ensure proper fit and function. Insertion and removal of the sub-assembly more than twice is not recommended due to the gold ribbon attach technique used in fabrication.

A tuning screw, mounted through the top of the diode assembly, adjacent to the 8-32 screw hole is adjusted to null a start spur on band 1 to −10 dBm. Although pre-calibrated, care should be taken not to force the tuning screw after it bottoms out on the surface of the quartz suspended substrate. (The null usually occurs about one turn from the bottom.)

The diode assembly is packaged in a static-free package. Keep the diode sub-assembly in this package until ready to install. The following procedure should be used when replacing this sub-assembly.

1. Remove the two mounting screws and remove the assembly from the 492; then loosen and disconnect the three coaxial cable connections to the mixer assembly.

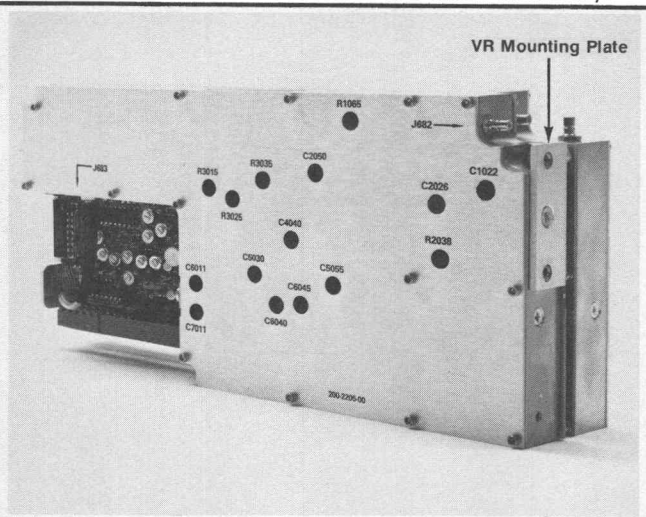

A. Location and position of mounting plate.

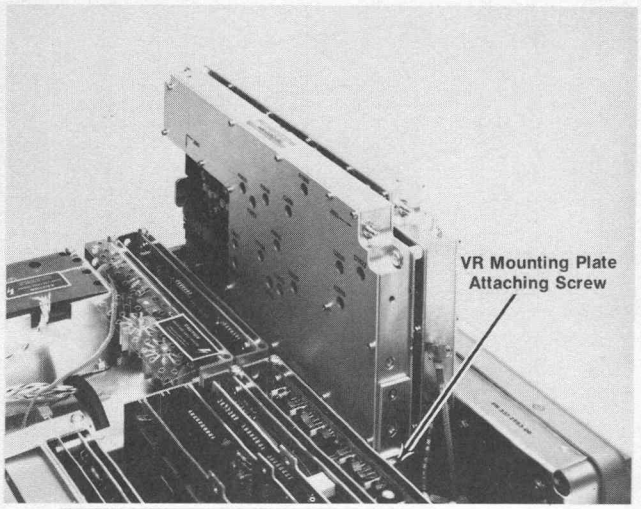

B. VR module on extender boards and secured for servicing.

2727-71

Fig. 4-5. Preparing the VR module for service showing how it is supported when on an extender.

2. Remove the four 0-80 screws and insert a 8-32 screw into the threaded hole provided in the center of the diode assembly.

3. Lift the diode assembly out of the mixer assembly by means of the 8-30 screw; then remove the screw.

4. Open the diode package, grasp the diode assembly by its side with tweezers and place it on a static-free surface. Grasp the side of the assembly with the fingers to avoid contact with the diodes and insert the 8-30 screw.

5. Orient the diode assembly so the three contact tips are aligned with their respective contacts in the mixer; then using the index fingers of both hands so equal pressure is applied, press the sub-assembly into place.

6. Insert the four mounting screws, tighten, then replace and tighten the three coaxial connectors so they are just snug. Install the two mounting screws that hold the assembly in the 492.

Replacing the Crt

1. Removal:

   a. Remove the snap-in printed bezel and crt light filter.

   b. Use a 8/64 inch Allen wrench to remove the four bezel screws, unplug and remove the inner bezel.

   c. Unsolder the ground wire from the front panel casting and unplug the crt cables at their respective board connections (high voltage module, deflection amplifier, and Z axis board).

   d. Slide the crt, with its shield, out through the front panel.

   e. Remove the crt shield as follows:

      1) Remove the tube base cap and unplug the socket.

      2) Remove the two side screws that hold the upper shield in place; then remove the shield.

      3) Loosen the screws that clamp the plastic bracket around the crt; then remove the bracket.

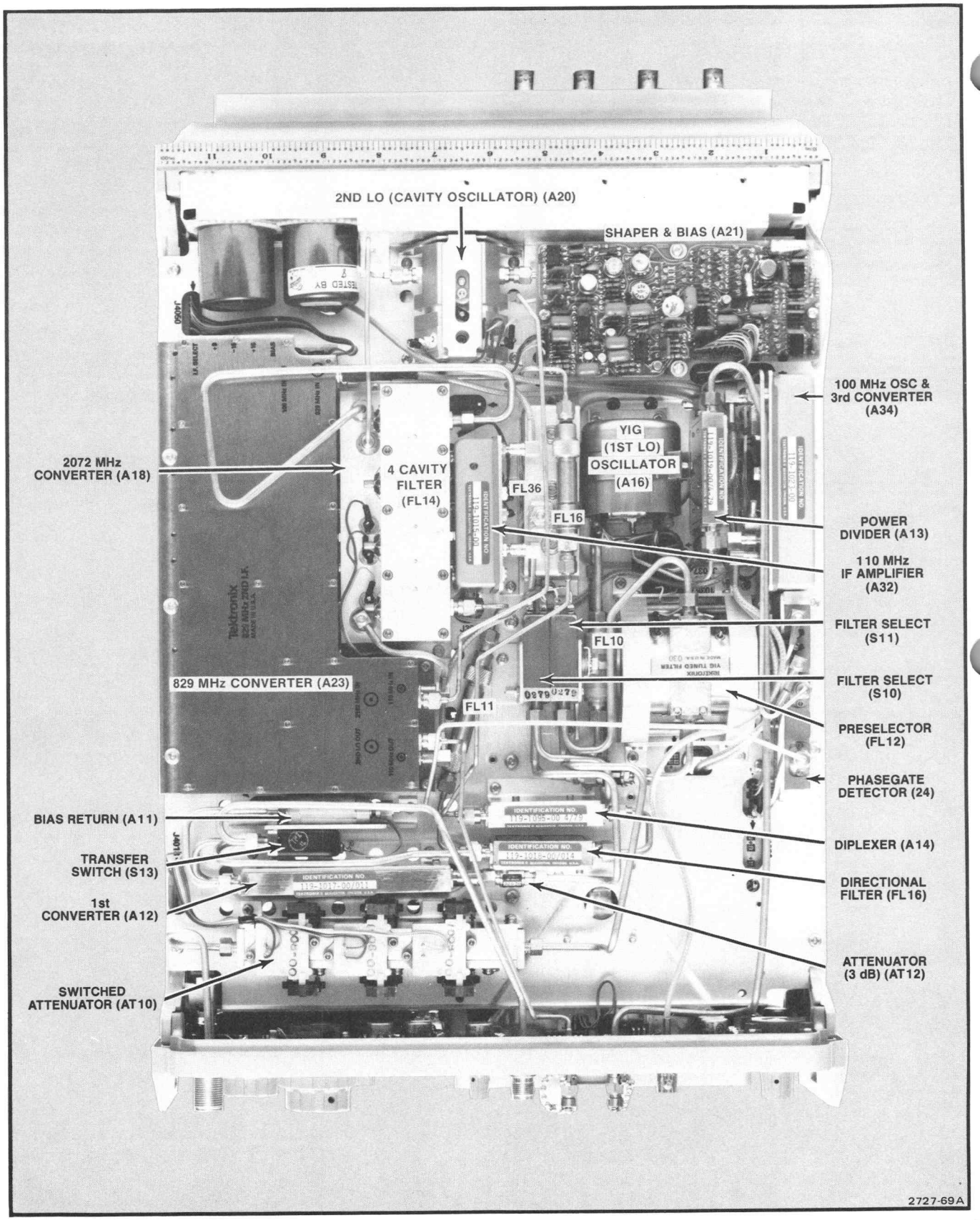

Fig. 4-6. View of the 492 RF deck showing major assemblies and circuit boards.

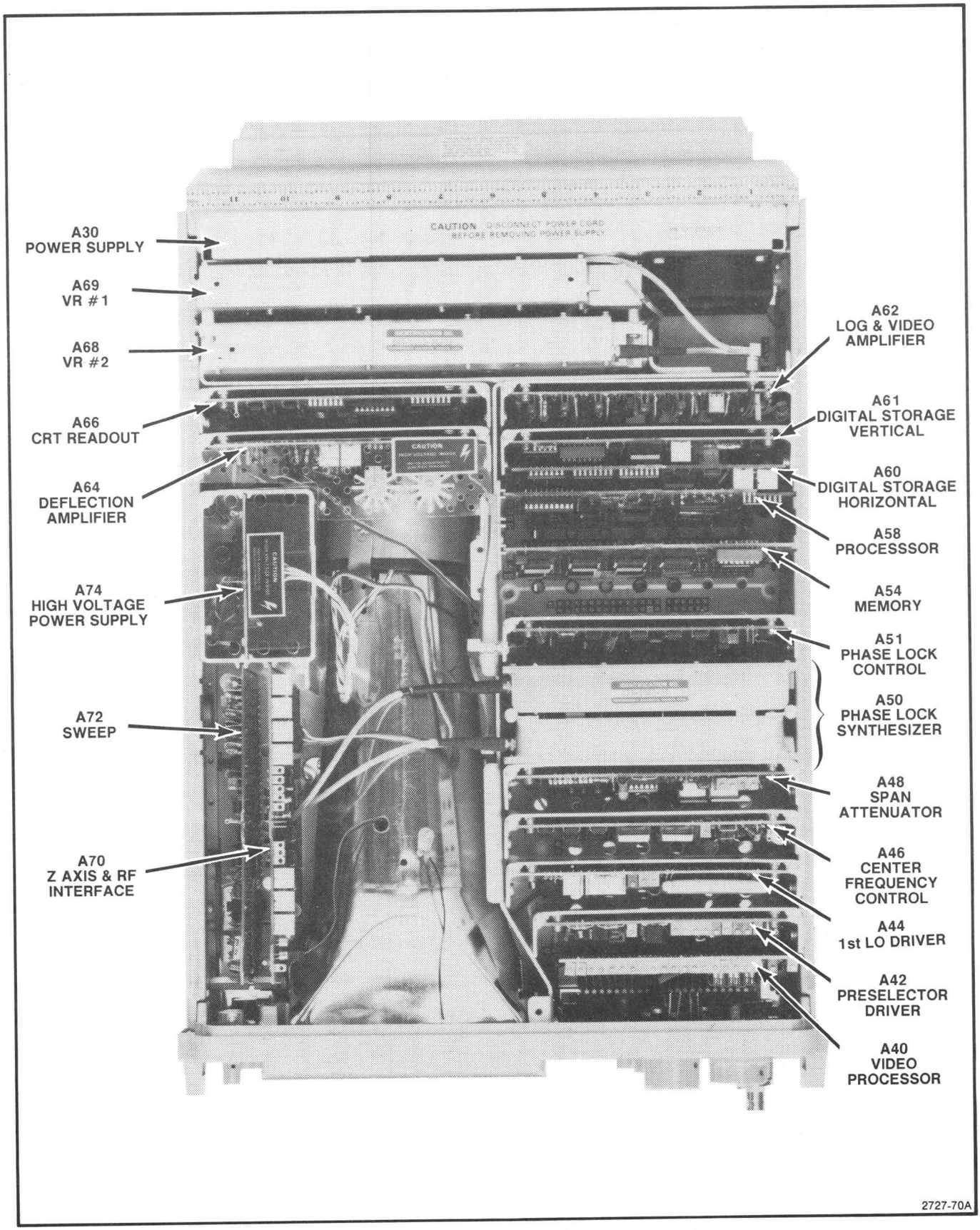

Fig. 4-7. View of the 492 top deck showing major assemblies.

2. Re-assemble as follows:

   a. Install the plastic bracket so the back on the clamp is 5.07 inches from the back of the crt socket guide.

   b. Replace the crt shield plus the socket and base shield by reversing the removal procedure. The finished crt assembly length, with cap installed, must equal 11.05 inches. If it is longer, the assembly may short circuit the Log Amplifier circuit board when it is installed.

   c. Install crt with shield assembly into the front panel. Install bezel and tighten the four mounting screws.

CAUTION

Do not reposition the front panel blue plastic crt holders. They have been factory aligned so the crt assembly seats properly. Visually inspect to ensure that the crt assembly clears the circuit board components.

   d. Reconnect cables to their respective board connectors and resolder the ground lead to its terminal. Replace crt light filter and snap-in bezel.

Repairing the Crt Trace Rotation Coil

The trace rotation coil is part of the crt assembly. If the coil is damaged beyond repair, the crt with the coil must be replaced.

If the "finish" (red) lead is broken, remove the tape and unwind one or two turns so it can be respliced and soldered to the lead wire. Rewind and retape.

If the "start" (black) lead is broken and the lead is too short to resplice, attempt to fish out the broken end so one or two turns can be unwound. Resplice and solder to the lead; then rewind and retape.

Front Panel Assembly

The front panel assembly does not have to be removed to replace any of the push buttons. Refer to Replacing Front Panel Push Buttons procedure that follows. The crt is removed with the front panel assembly.

Removal

1. Unscrew and remove the mounting nuts and washers for the RF INPUT, EXT MIXER, plus the two 1st and 2nd LO OUTPUT connectors.

2. Remove the two screws that hold the front panel to the RF deck (center and left side).

3. Unplug the CAL OUT coaxial cable from the 3rd converter; then disconnect the five crt cables from the Z Axis/RF Interface, High Voltage module, and Deflection Amplifier.

4. Looking at the top of the instrument, remove the one screw that holds the front panel to the side extrusion, between the crt and the right side of the instrument.

5. Now set the instrument on its side and remove the four screws that hold the front panel to the side rails.

6. Pull the front panel up and off the Mother board.

Replacement

Replace the front panel by reversing the removal procedure.

Front Panel Board

NOTE

A replacement Front Panel board comes with switches and controls for all Options (1, 2, 3, etc.). Before replacing an existing board, remove the switches and controls on the new board that are not used on the existing instrument.

Removal

1. Remove the front panel assembly as described previously.

2. Use an Allen wrench to loosen the knob locking screws and remove all knobs.

3. Lay the front panel on its face; then remove the eleven circuit board screws and the screw that heat sinks and holds IC U6090 on the board. Note that the screw next to the connector plug has a fiber washer.

4. To prevent losing the grounding rings or bushings between the front panel controls and the front panel casting, hold the circuit board against the front panel casting while turning the complete assembly so it rests on the base of the crt assembly.

5. Gently lift the casting from the circuit board. Ensure that the grounding rings remain on the shaft of all controls as the casting is removed.

Replacement

Reverse the removal procedure, ensuring that the fiber washer is on the board screw next to the connector plug. This washer prevents the screw from shorting a circuit board run to the front panel casting.

Replacing Front Panel Push Button Switches

The front panel assembly does not have to be removed to replace any push button switch. The procedure follows:

1. Remove front panel knobs. Loosen and remove nuts and washers for the RF INPUT, EXTERNAL MIXER, plus the 1st and 2nd LO connectors.

2. Remove the screw that was under the FREQUENCY tuning knob which holds the panel to the front panel casting.

3. Loosen the black screws through the crt bezel so the panel can be moved enough to lift it off the casting.

4. Unplug and replace the desired switches.

Main Power Supply Module

CAUTION

To avoid damage to the Mother board connector J5041 and Interface connector J1034 during removal or installation of the Power Supply Module, use the following procedure.

Removal

1. Disconnect the power cord, set the 492 on its face or front panel and remove the instrument cover.

2. Unplug the coaxial cable connector P620 from the Log Amplifier assembly and pull the cable through so it is clear.

3. Remove the three screws that hold the power module to the RF deck flange (bottom right side).

4. Remove the four screws that hold the power supply module to the side-rails.

5. With the instrument on its face and the RF deck on the near side, pull the left side of the power module from its side-rail (no more than one and one-half inch). Now grasp both sides of the module and lift to separate the module from the Mother board.

Replacement

1. Set the instrument face down with the RF deck on the near side.

2. Hold the power supply module over the instrument so the right side is touching the side-rail and the left side is about one and one-half inch above its side-rail.

3. Align connectors P5041 and P1034 with their respective Mother board and Interface board connectors and press the module into place between the side-rails.

4. Replace the four module holding screws and the three flange screws.

5. Thread the coaxial cable under the semi-rigid cables on the RF deck and through the deck opening to the Log Amplifier assembly connector J620 so the cable will not catch when the instrument cover is replaced.

6. Replace the instrument cover.

High Voltage Power Supply

Before the High Voltage Power Supply circuit board can be unplugged and removed, a screw through the side-rail into a nylon standoff bushing, at the bottom corner of the board, must be removed.

Replacing the 1st (YIG) Local Oscillator Interface Board

The YIG oscillator assembly includes an interface circuit board that can be ordered separate. To replace the board refer to Fig. 4-8 and the following procedure. Use a desoldering tool to remove the solder as these leads are unsoldered.

1. Unsolder and lift one end of C1014 (820 μF) capacitor at the top of the board.

2. Unsolder and lift one end of VR1010.

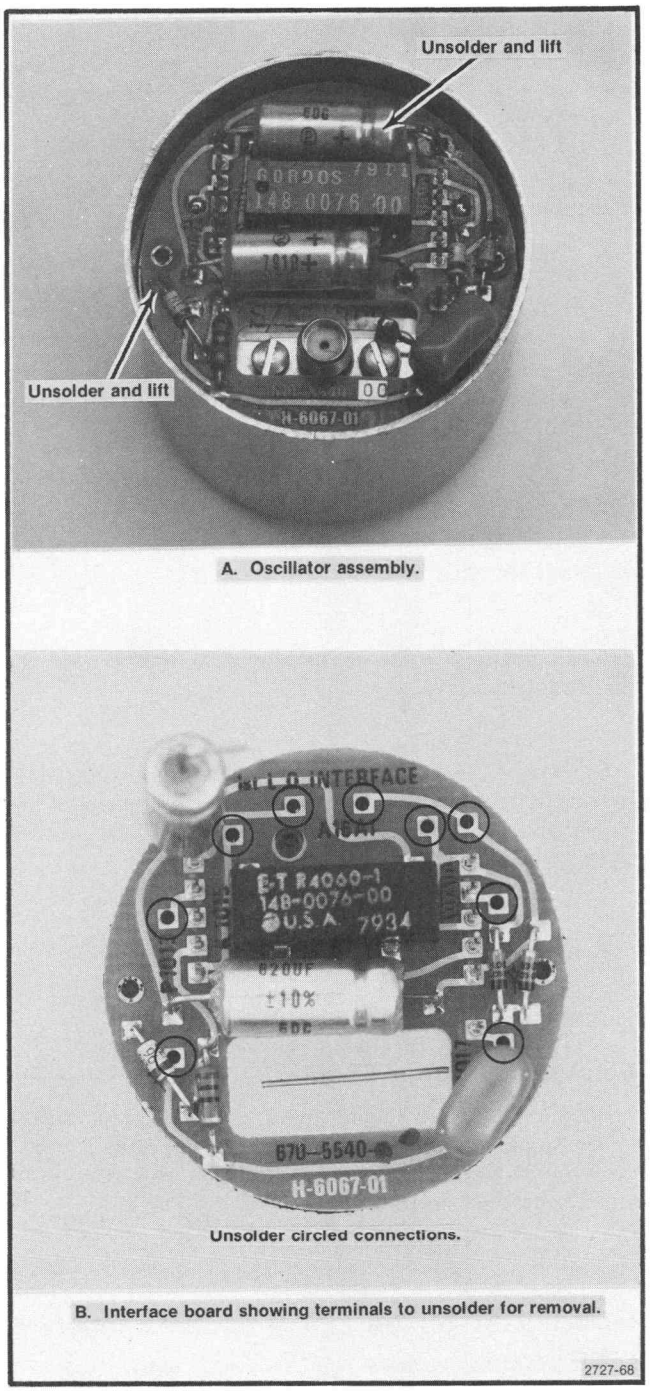

Fig. 4-8. Removing YIG oscillator interface circuit board.

3. Unsolder and lift the wire to the ground lug on P166.

4. Unsolder the eight leads to the YIG and lift the board off the assembly.

Compliant Mounted Fan

Instruments SN B010322 and up may have a compliant mounted fan (see Fig. 4-9). It is important that the mounting screws for these fans are not over-tightened.

Removal

1. Remove power supply as described in this section.

2. Remove six screws that hold the power supply cover in place. Take the coaxial cable out of the plastic retainer clip and lift the power supply cover with fan up, so harmonica connector P3045 can be disconnected and the cover removed.

3. Unsolder the leads to the fan.

4. Using a 1/4 inch open-end wrench or needle-nose pliers, retain the nylon nut while unscrewing the fan mounting screws with a Phillips screwdriver.

NOTE

After the fan is removed, be sure to retain the rubber and steel washers on the screws. These are essential for proper operation of the compliant mount. Do not re-use the self-locking nylon nuts.

5. Remove the lead gasket from the old fan and install it on the replacement fan assembly. Do not over-tighten the screws retaining the gasket. The lead is soft enough to be deformed by over-tightening.

Replacement

1. Refer to Fig. 4-9 and replace as follows:

a. Place the foam gasket between the fan housing and the power supply module cover.

b. Insert the two 5/8 inch machine screws, with washers mounted as shown in Fig. 4-9, through the two eyelets. Place the fan in position then while holding the nylon nut with needle-nose pliers, screw the mounting screws into the nut until the end of the screw is just flush with the nut. The nylon nuts are self locking. Do not re-use the nylon nuts because vibration may loosen re-used nuts.

2. Re-solder the fan power leads, brown to pin 1, red to pin 2, orange to pin 3, and yellow to pin 0.

3. Reconnect the plug P3045, making sure the index markers are aligned, then replace the cover with the fan onto the power supply module.

4. After installing the six screws that hold the cover in place, insure that the fan assembly moves freely. Replace the coaxial cable in the plastic retaining clip.

5. Re-install the power supply assembly as directed under Power Supply Replacement. Apply power and check for normal fan operation. If fan does not run, check the connection of harmonica connector plug P3045.

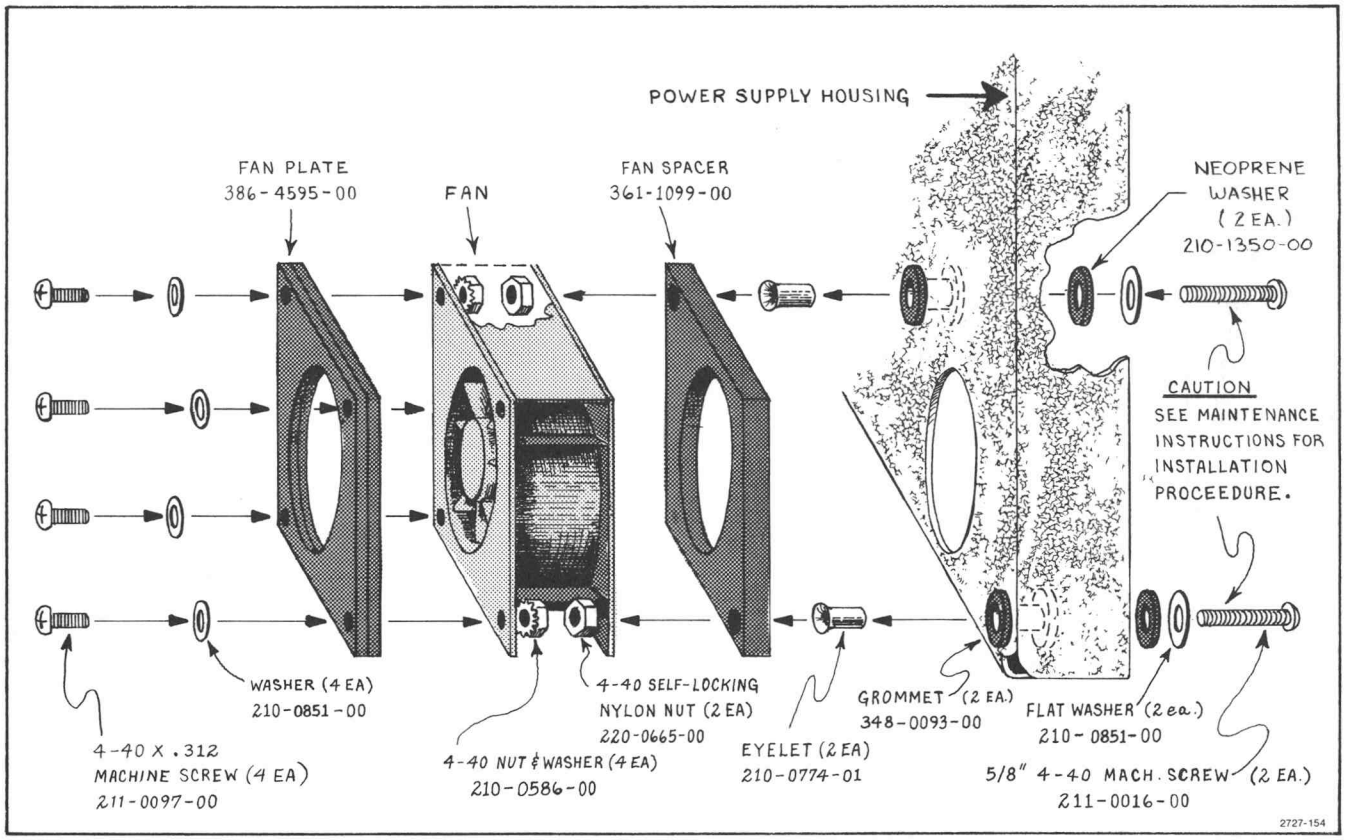

Fig. 4-9. Exploded drawing of fan assembly.

Maintenance Adjustments

The following procedures are not part of the regular calibration. They are applicable when an assembly is replaced or after major repair.

110 MHz IF Assembly Return Loss Calibration

NOTE

The IF assembly must be removed to gain access to the adjustments.

Test Equipment	Characteristics	Recommended Type
Spectrum Analyzer	Frequency range ⩾110 MHz	TEKTRONIX 492, or 7L18 Spectrum Analyzer
Signal Generator	Frequency 110 MHz at +10 dBm	TEKTRONIX SG503 for the TM 500 Series
VSWR Bridge		Wiltron VSWR Bridge, Model 62BF50
10 dB and 1 dB Step Attenuators	50 Ω, 0 dB to 40 dB	TEKTRONIX 2701
Termination	50 Ω	Tektronix Part No. 011-0049-01
Adapter	BNC to Sealectro	Tektronix Part No. 175-0419-00

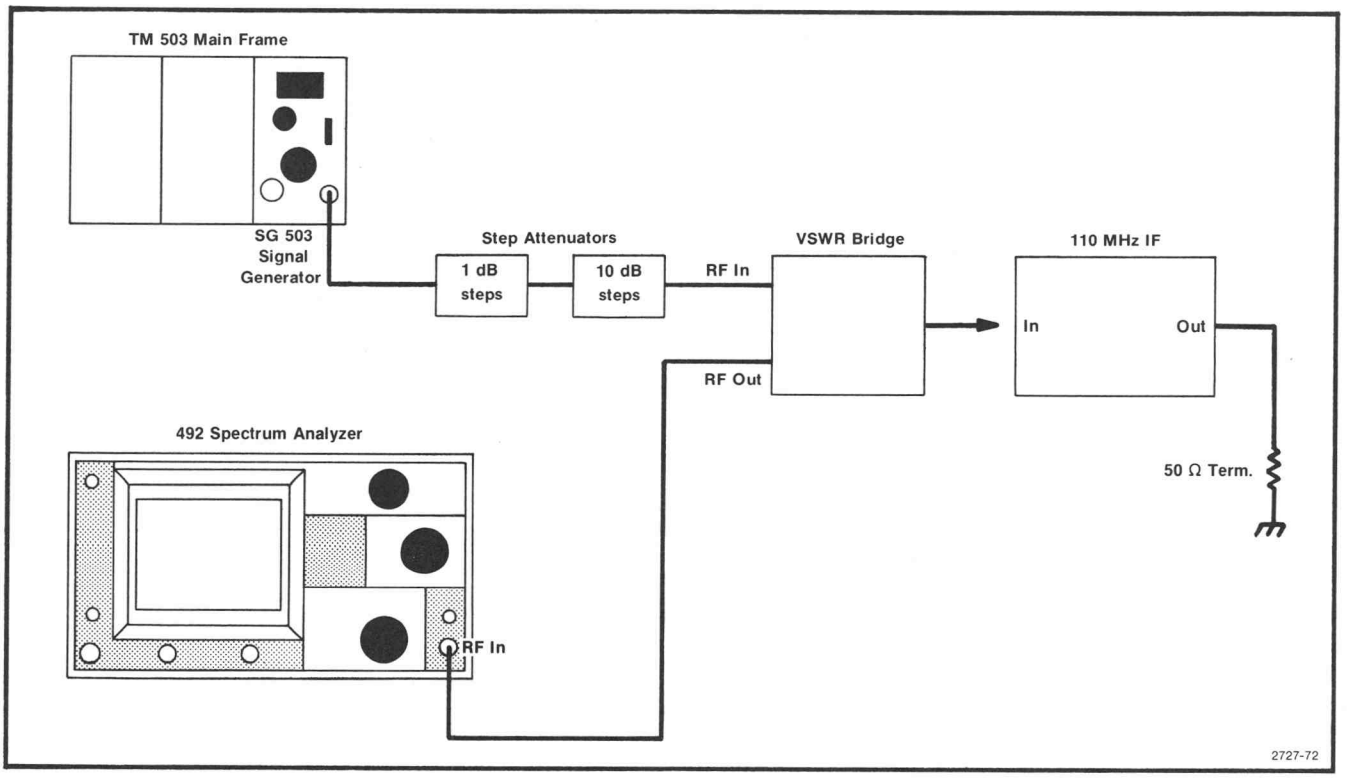

Fig. 4-10. Test equipment setup for adjusting return loss for the 110 MHz IF assembly.

1. Test equipment setup is shown in Fig. 4-10. Apply 110 MHz at 2 V p-p (+10 dBm) through 35 dB attenuation to the RF Input of the VSWR bridge. Connect the RF Out of the VSWR bridge to the RF Input of the spectrum analyzer. (Do not connect the 110 MHz IF to the VSWR bridge.)

2. Set the spectrum analyzer center frequency to 110 MHz, SPAN/DIV to 5 MHz, RESOLUTION BANDWIDTH to 3 MHz, VERTICAL DISPLAY to 10 dB/div, and REFERENCE LEVEL to −20 dBm.

3. Adjust the step attenuator for full screen (−20 dBm) display.

4. Connect the 110 MHz IF input to the VSWR bridge and connect a 50 Ω termination on the output of the IF amplifier. Now plug the power cable P3045 into the + and −15 V source and ground the case of the assembly.

5. Adjust C2047 and C325 (Fig. 4-11) simultaneously for minimum signal amplitude on the spectrum analyzer display. Minimum amplitude must be at least 35 dB down from the full screen reference of −20 dBm.

6. Disconnect test equipment setup and replace the 110 MHz IF assembly.

CAUTION

Do not open the assembly. Adjust the tuning slug only after checking the filter characteristics.

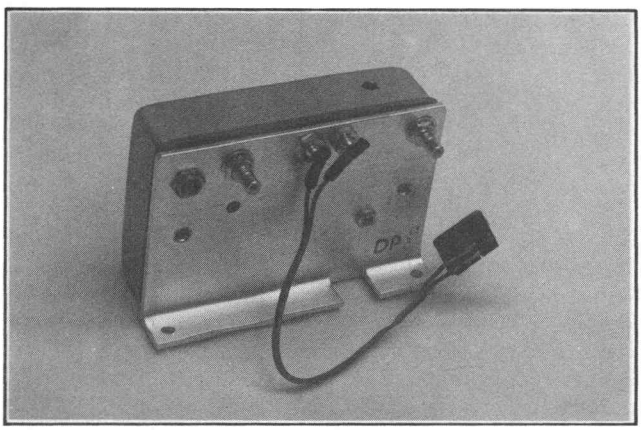

Fig. 4-11. Location of the 110 MHz IF return loss adjustments and IF Gain adjustment.

2072 MHz 2nd Converter

The 2nd converter assembly consists of a four cavity 2072 MHz bandpass filter, mixer, and a 110 MHz low-pass filter. The assembly is calibrated at the factory, prior to installation, and requires no calibration after it is installed. We recommend replacing the assembly if it should malfunction. The following procedure describes adjustments that can be made if the biasing should malfunction or the seal on any of the filter tuning slugs is broken. The mixer diodes are not to be replaced in the field. Return the assembly to Tektronix, Inc., for repair.

FOUR CAVITY FILTER

The characteristics of the filter are checked with a network analyzer. Frequency of the filter is 2072 MHz, bandpass is 15 MHz down 1 dB, return loss is 20 dB or greater, and insertion loss is 1 dB.

If the seal is broken on any tuning slug, adjust for maximum return loss.

MIXER

To gain access to the Bias adjustments, remove the assembly from its mounting; then remove the mounting plate on the bottom of the assembly. Reconnect the Mixer to the input/output lines, using the same cables (cable length of semi-rigid cables is critical). Apply the CAL OUT signal to the RF INPUT and tune a marker to center screen. Simultaneously adjust both bias potentiometers for maximum signal amplitude.

110 MHz THREE CAVITY FILTER

Alignment is not a normal calibration adjustment. The tuning slugs are adjusted for center frequency and response shape so the resolution bandwidth is within specifications. Adjustment procedure is as follows:

a. With the CAL OUT signal applied to the RF INPUT, tune the signal to center screen and reduce the RESOLUTION BANDWIDTH to 1 kHz.

b. Tune the signal to center screen to establish center frequency reference; then increase the RESOLUTION BANDWIDTH to 1 MHz.

c. Adjust the tuning slugs for best response shape, centered around the reference. Ensure bandwidth (6 dB down) is 1 MHz.

d. Check resolution bandwidth accuracy over the range of the RESOLUTION BANDWIDTH selector to ensure that bandwidth is within specification.

829 MHz CONVERTER MAINTENANCE

Some circuit boards in this assembly contain critical length printed elements. When damaged, these elements are usually not repairable, therefore the circuit board must be replaced. Even though replacement boards are precalibrated and repair can be accomplished by replacing the board, we recommend sending the instrument or assembly to your Tektronix Service center for repair.

The 829 MHz bandpass filter in the IF section, and the 719 MHz LO in the LO section, require adjustment only if the board has been damaged or active components (transistor or varactor) have been replaced. The following describes preparation for service and replacement procedures. The first two steps describe how to gain access to either the LO or the IF section, the remaining steps describe adjustment procedure for each section.

1. To gain access to the LO section

a. Switch POWER off, use a 5/64 Allen wrench to loosen and remove the cover screws.

b. Remove the cover.

c. Refer to step 3 for adjustment procedure.

2. To gain access to the IF section

a. Switch POWER off, use a 5/16 inch wrench to disconnect and remove all coaxial connectors to the 829 MHz converter.

b. Unscrew and remove the six mounting screws, unplug the input power connector P4050, then remove the 829 MHz converter assembly.

c. Turn the assembly over and remove the cover for the IF section.

d. To troubleshoot or calibrate the circuits, set the assembly at a location so the input power plug P4050 can be reconnected to the Mother board. Be sure to observe plug orientation (pin 1 to pin 1).

e. Refer to step 4 for adjustment procedure.

3. 719 MHz Oscillator Range Adjustment

a. Adjustment requires the following test equipment:

A frequency counter with a frequency range to 1 GHz (nine digit readout), sensitivity of 20 mV rms prescale, 15 mV rms direct; such as TEKTRONIX DC 508A. A digital voltmeter with a 3.5 digit readout, such as TEKTRONIX DM 502A. Test leads for the DVM, a 50 Ω coaxial cable with BNC connectors (part number 012-0482-00) and a SMA male to BNC female adapter (part number 015-1018-00).

b. The 2nd LO range is from 714.5 MHz to 723.5 MHz (with the cover off). 719 MHz is the optimum center frequency. Frequency of the oscillator is controlled by the Tune Volts from the 25 MHz Phase Lock circuit (located at TP1011) which varies from +5 V (low end) to +11.9 V (high end) with +6.75 to +7.5 V as the limits for operation at 719 MHz. Set the digital voltmeter to measure 12 V then connect it between TP1011 (Fig. 4-12) and ground.

c. Disconnect the 100 MHz reference from the 3rd converter by unplugging P235 (Fig. 4-12). The oscillator should go to its upper limit and the voltmeter indicated about 11.9 V.

d. Connect the 75 MHz—1000 MHz input of the frequency counter through a 50 Ω coaxial cable to the front panel 2nd LO OUTPUT connector.

e. The 719 MHz oscillator frequency is a function of the length of the printed 1/4 wavelength transmission line. Minor adjustments to the oscillator frequency are made by shortening the U shaped transmission line stub, off the main line. Graduation marks (see Fig. 4-12) along the side of the stub provide a guide to calculate frequency correction. Each minor mark from the end or cut across the stub, represents an approximate change of 2 MHz.

Check the frequency by noting the reading on the frequency counter. If above 723.900 MHz, the stub must be lengthened. Solder a bridge across the cut and recheck frequency. Nominal frequency for an uncut stub is 710 MHz.

f. Shorten the line so the frequency is near 723.500 MHz. For example: The frequency difference between desired and actual, divided by 2 MHz, equals the number of minor divisions from the line end for the new cut. Make a cut across the line and check that the new frequency is between 723.100 and 723.900 MHz. Repeat as necessary.

g. Cover the 719 MHz oscillator cavity with the 829 MHz Converter cover, press down to ensure good shielding, and note the frequency readout of the counter. Frequency should fall within 723.600 and 724.400 MHz.

h. Reconnect P235 (100 MHz) and P237 (2182 MHz) and confirm that phase lock is operating by noting that the voltage on TP1011 is between 6.75 and 7.5 V. This completes the adjustment of the 719 MHz LO. Replace the cover and re-install the 829 MHz converter assembly.

4. 829 MHz Coaxial Bandpass Filter Adjustment

NOTE

This procedure is necessary if the position of one of the variable capacitor loops (tabs) has been altered, changing the bandpass characteristics of the filter.

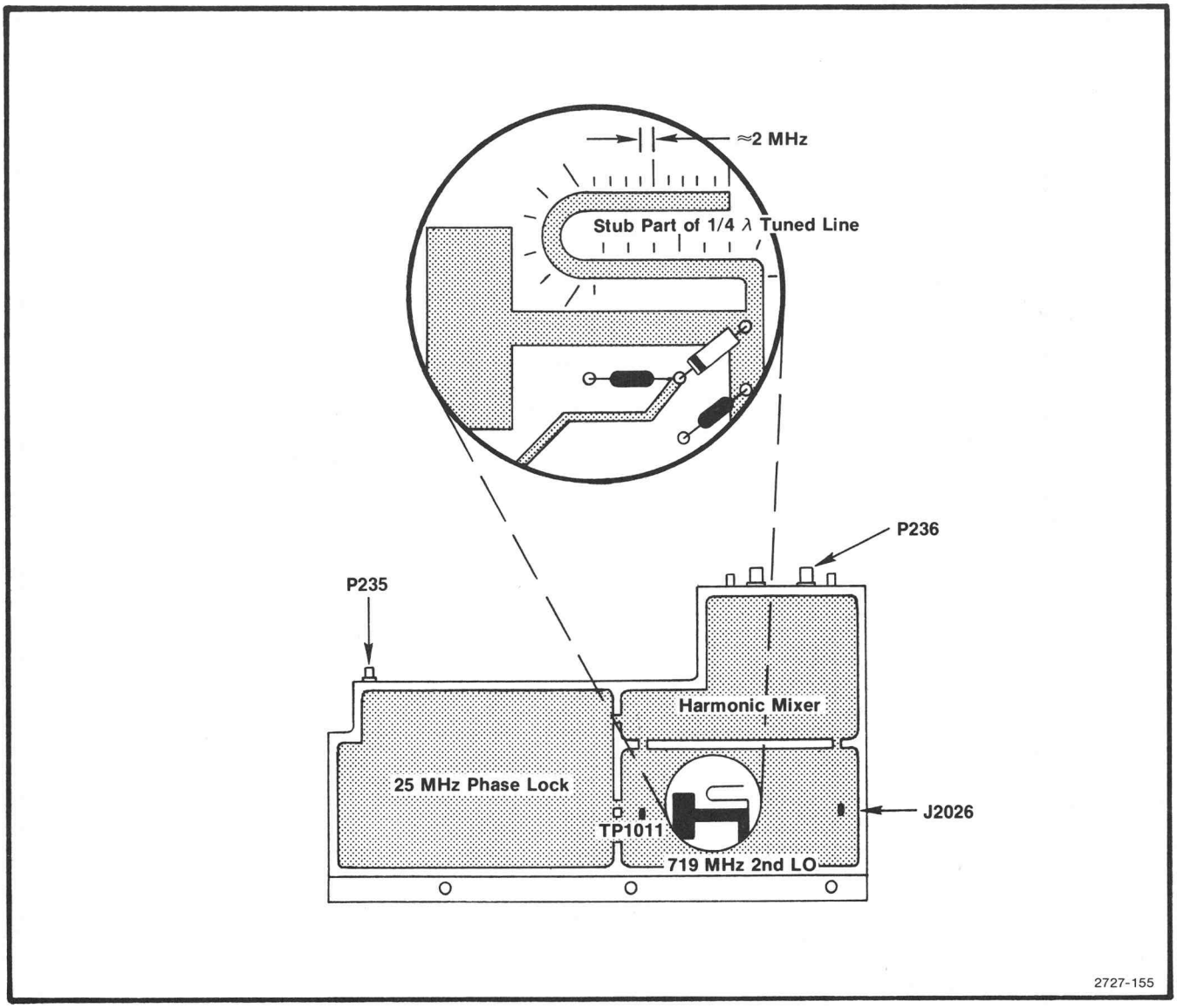

Fig. 4-12. LO section of the 829 MHz converter showing test points and connectors.

a. Test equipment required:

Spectrum analyzer with tracking generator.	492 Spectrum Analyzer with TR 503 Tracking Generator; or 7L13 with a TR 502 Tracking Generator.
Frequency Counter	TEKTRONIX DC 508
Return Loss Bridge	Wiltron Model 62BF50

b. Unsolder and reconnect the jumper, on the 829 MHz amplifier board, to the test Peltola jack J1029 (see Fig. 4-13).

c. Connect the spectrum analyzer, tracking generator, and frequency counter together as a system, with the frequency counter connected to the Auxilliary RF Output of the tracking generator (see Fig. 4-14).

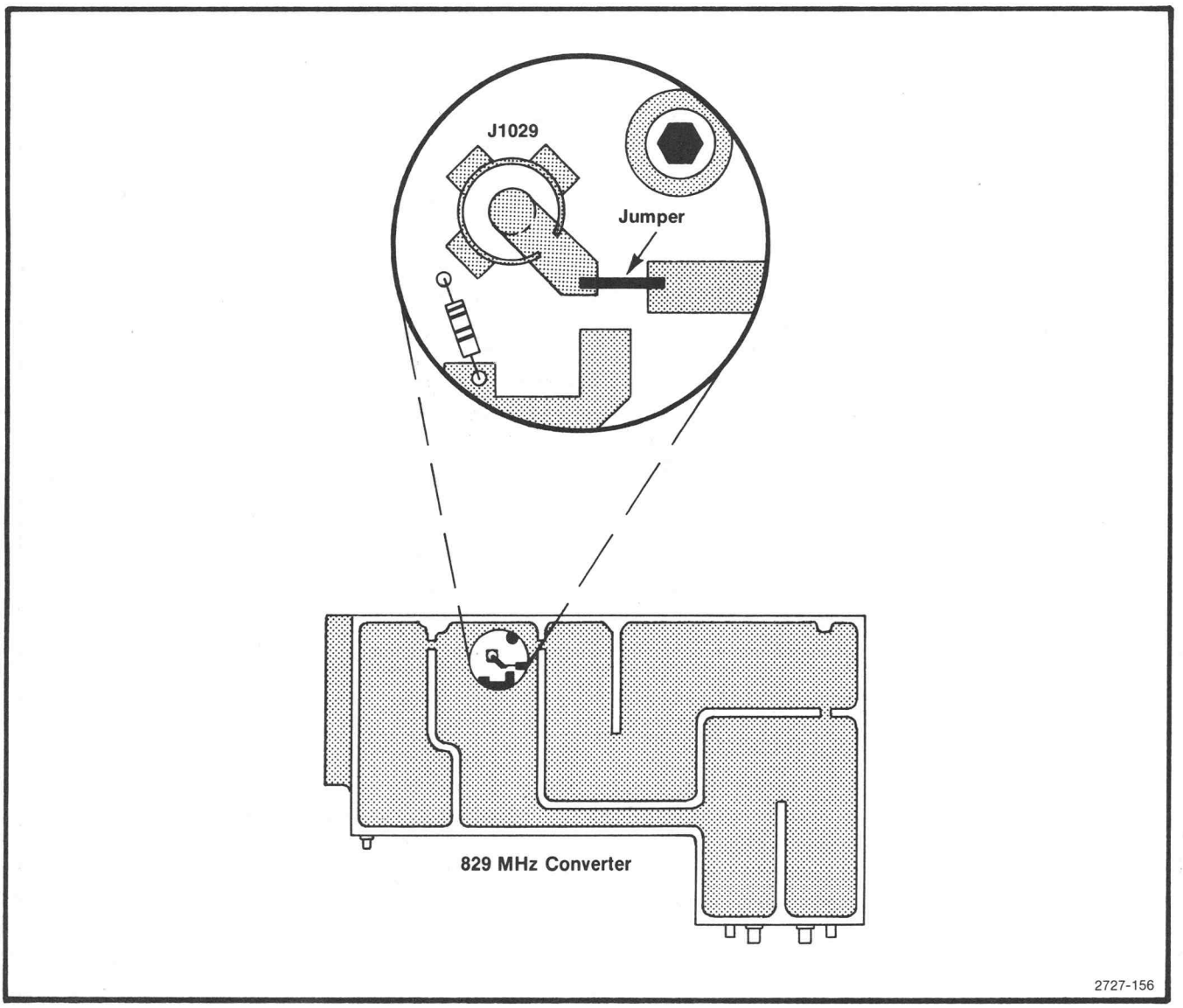

Fig. 4-13. Location of test jack and jumper on the 829 MHz amplifier board.

d. Connect the spectrum analyzer/tracking generator system through the return loss bridge to the Peltola jack (J1029) on the 829 MHz amplifier board (see Fig. 4-14). Reconnect P235 (100 MHz reference signal) and P237 (2182 MHz input) to the LO section of the converter.

e. Set the spectrum analyzer Reference Level to −20 dBm, Vertical Display mode to 2 dB/div, Resolution Bandwidth to 300 kHz, and Freq. Span/Div to 20 MHz. Tune the Center Frequency for a readout of 829.00 MHz on the frequency counter.

f. Adjust the 1/4 wavelength lines in the filter in sequence, starting with the resonator at the 829 MHz input (see Fig. 4-15). Adjustment is made by shorting the adjacent resonator to ground with a low inductance conductor, such as a broad blade screw driver, then bend the loop or tab of the respective stub with a non-metallic tuning tool to change the series capacitance of the resonator.

g. With the adjacent resonator (second) shorted to ground, adjust the series capacitance, by bending the tab, so the response on the spectrum analyzer display is centered at 829 MHz (see Fig. 4-16A).

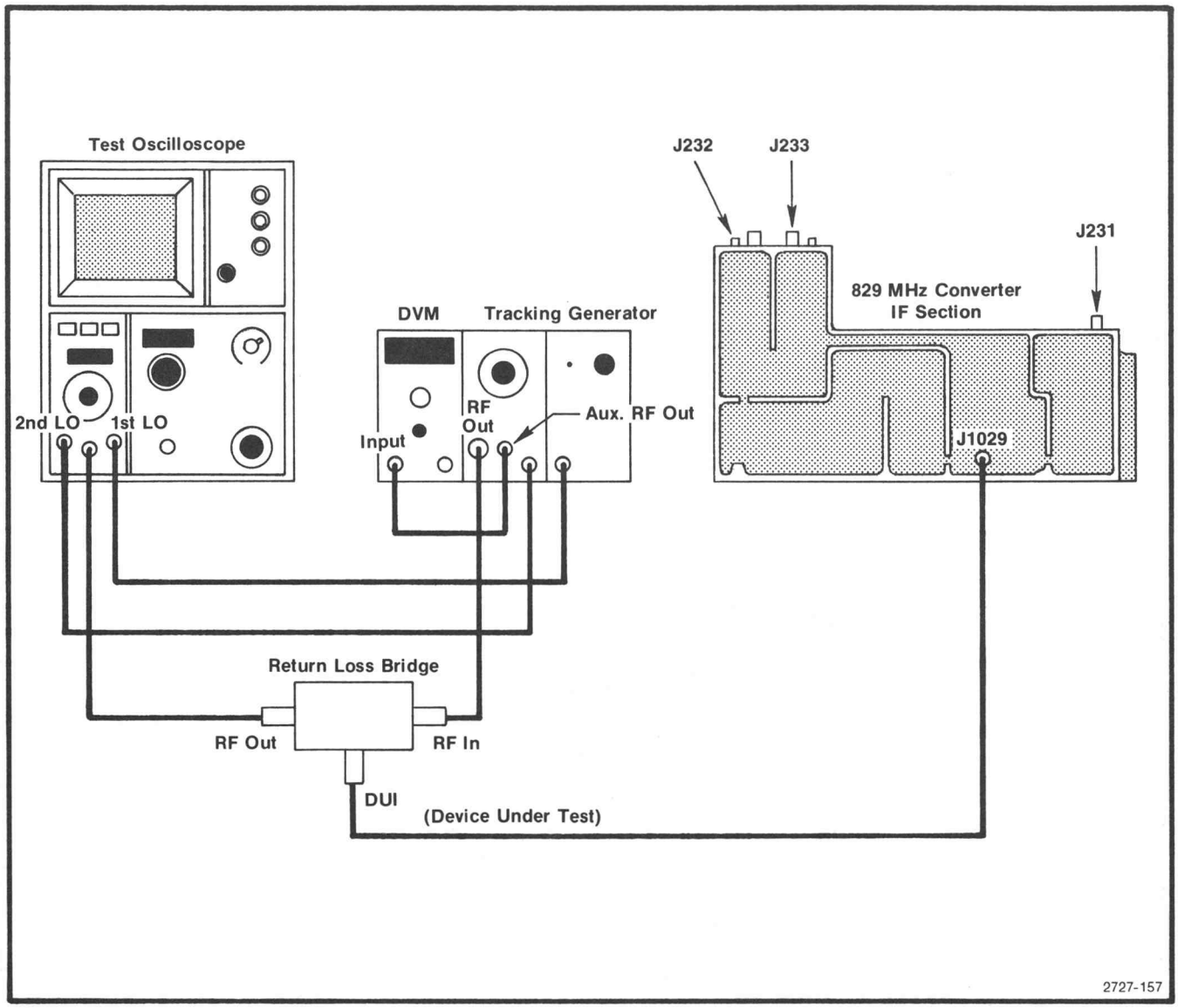

Fig. 4-14. Test equipment setup for aligning the 829 MHz filter.

h. Now move the shorting strap (screwdriver) to the next resonator and adjust the tab of the second resonator for a response as indicated in Fig. 4-16B.

i. Remove the short from the third resonator and short the fourth resonator. Adjust the third resonator for a response similar to that shown in Fig. 4-17A.

j. Repeat the procedure for the final (fourth) resonator for a response similar to that shown in Fig. 4-17B.

k. Check that the return loss is equal to or greater than 12 dB.

l. Disconnect the return loss Device Under Test lead to the Peltola jack J1029 on the 829 MHz amplifier board then unsolder and reconnect the jumper to the amplifier output.

m. Replace the 829 MHz Converter cover and re-install the assembly in the 492.

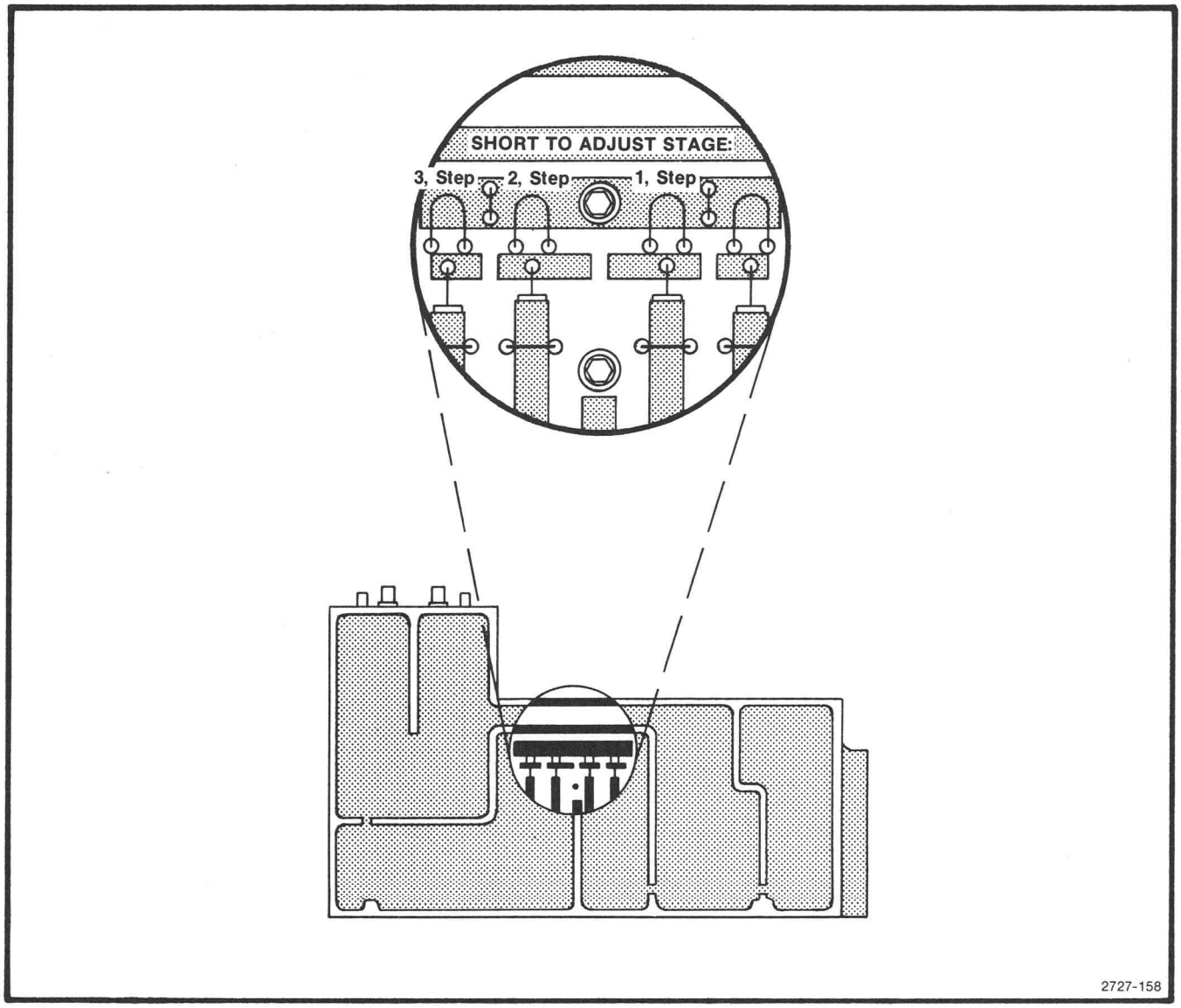

Fig. 4-15. Filter tune tabs in the 829 MHz converter.

MICROCOMPUTER SYSTEM MAINTENANCE

Several maintenance aids are built into the microcomputer system. These are microcomputer operating modes that demonstrate correct performance or indicate the location of a problem, if any.

Switches that set up two of these test modes are described first, followed by instructions for the three test modes. In the first mode, the microcomputer executes a self-test that verifies, in so far as possible, correct operation. RAM, ROM, and interface adapters are checked; any failure found is indicated.

The second mode hardwires the microprocessor to execute an instruction that toggles the address bus; this mode requires less of the system to run, so may be used to troubleshoot problems that disable the first mode.

The third mode gets at communication between the microcomputer and the rest of the instrument. The microcomputer exercises the instrument bus to help isolate problems that do not show up in the first mode, but prevent normal instrument operation because of a breakdown in communication.

Some notes on operation of several versions of instrument firmware conclude the discussion of microcomputer system maintenance.

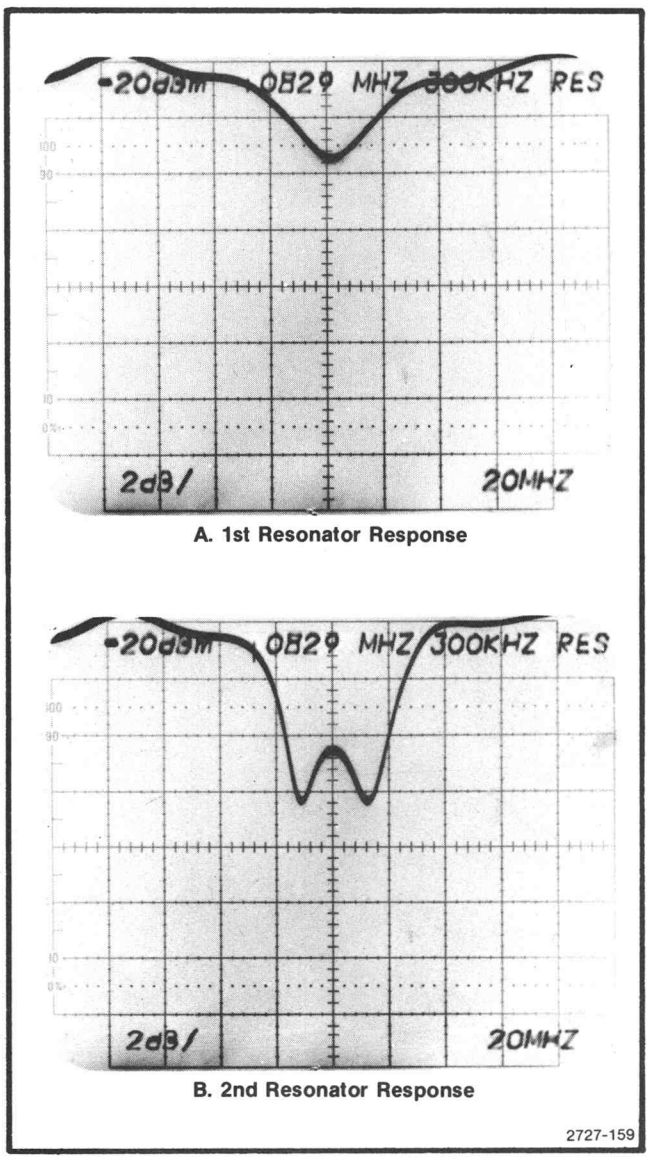

Fig. 4-16. Typical response when the first and second resonators of the 829 MHz filter are adjusted correctly.

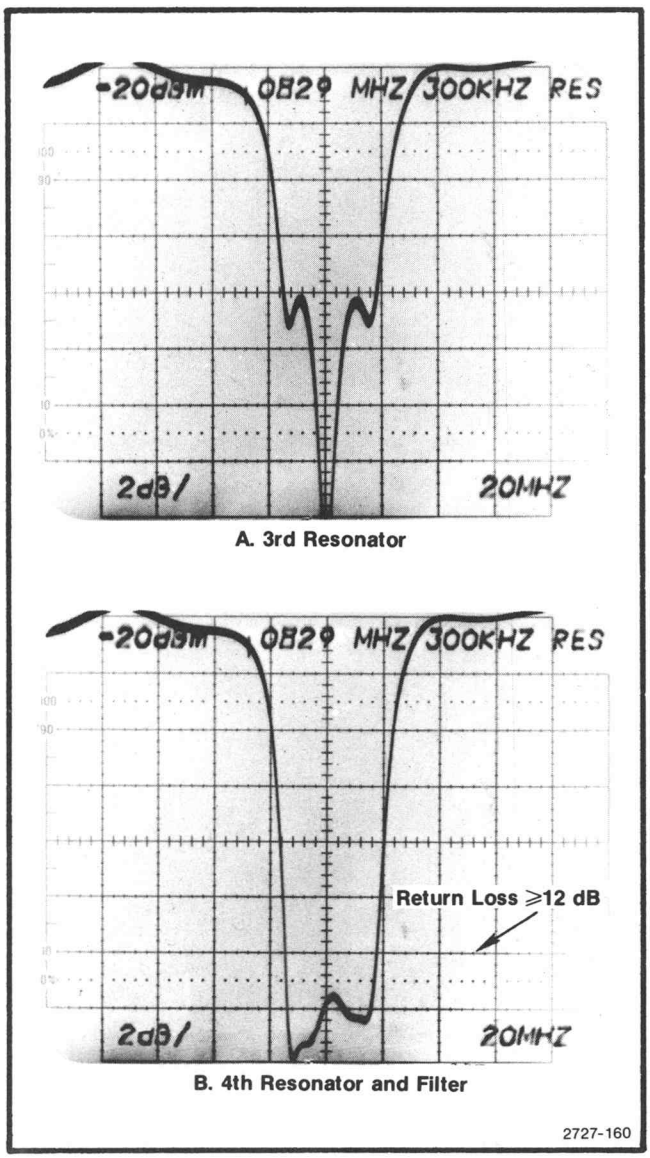

Fig. 4-17. Typical response when the third and fourth resonators of the 829 MHz filter are tuned correctly.

Memory Board Option Switch

S1033 on the Memory board informs the microcomputer whether to configure itself at power-up for several test modes, for instrument modifications, and for Option 8. Figure 4-18 shows the correct setting of the individual switches in S1033.

The microcomputer reads these switches only at power-up. For a change in a switch position to take effect, the instrument must be powered-up after the switch is changed.

Power-Up Self-Test Mode

The microcomputer enters a self-test mode when the instrument is turned on if this mode is selected (Fig. 4-18). In this mode the instrument does not operate normally. The microcomputer performs the following steps, stopping the test to indicate the source of any problem found by blinking an LED on the Processor board.

Addresses are specified as hexadecimal numbers in this description.

Step 1. At power-up, the microcomputer vectors to the self-test in the ROM at the top of address space U2028 on the Memory board. The microcomputer first verifies the checksum of U2028. If the routine for this step runs, but doesn't obtain the correct checksum for the ROM, the routine halts and blinks the ROM 8 LED, DS1044.

This step uses only U2028 and no other memory; so if the test does not blink the LED and does not proceed to step 2, U2028 is probably the culprit. Consider first, however, that the correct ROM must be installed, both phases of the clock on the Processor board must be present, and the microcomputer system (exclusive of the instrument bus or GPIB) must be operating correctly. If in doubt about the 6800 microprocessor, its bus, or the microcomputer bus, skip to the instructions under Microcomputer Test Mode, to exercise the microcomputer in a more simple manner.

Step 2. The microcomputer next checks the condition of RAM. This step does not rely on the RAM being ok to execute. The procedure is: the microcomputer loads the bit pattern 01010101 into a RAM location, reads the location, and compares what is returned to what was stored. The microcomputer then repeats this test with the pattern 10101010.

The microcomputer attempts to test all RAM addresses. If it finds an error on the Memory board, it stops the test and pulses the RAM LED, DS1042—once for an error in U2035, twice for an error in U2032, and three times for an error in both RAM ICs; these ICs are on the Memory board. If the microcomputer finds an error on the GPIB board, it pulses the LED 7, 8, or 9 times in a similar manner for low RAM—U1046 and U1037—or 9, 10, or 11 times for high RAM—U1042 and U1032. The microcomputer continues to repeat the number of pulses after an error is found.

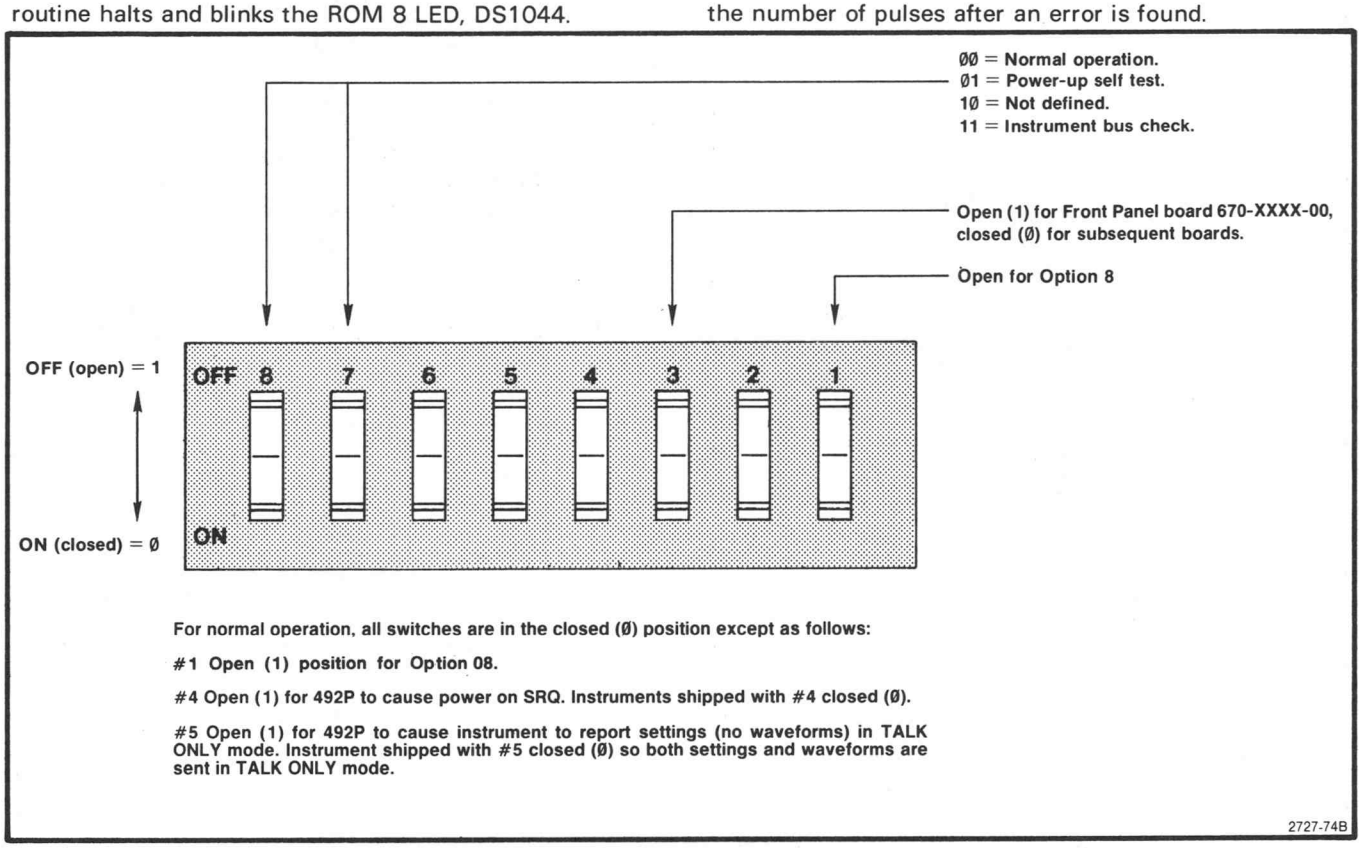

Fig. 4-18. The memory board option switchbank, S1033.

Step 3. The microcomputer proceeds to checksum all the ROMs. A checksum is stored in the header of each ROM. This is compared to a checksum formed by the successive 8-bit sum of each byte in the ROM starting at the fourth location in the ROM. The upper eight bits of the ROM's address (stored at the first location) is also added to the checksum. Thus if a ROM is installed in the wrong socket, its checksum does not verify.

The ROM sockets, including those on the GPIB board, are checked starting at the lowest address (U1012 on the Memory board). The check starts by looking at the MSB in the first and fourth locations in the ROM's address range. If both bits are one, it is assumed that no ROM is installed.

When a defective ROM is found, the routine discontinues the test and pulses repeatedly the ROM LED, DS1038, to indicate the ROM socket where an error was found:

ROM Socket	Board	Pulses
U1012	Memory	1
U1017	Memory	2
U1023	Memory	3
U1028	Memory	4
U2012	GPIB	6
U2019	GPIB	7
U2025	GPIB	8
U2031	GPIB	9
U3012	GPIB	10
U3019	GPIB	11
U3025	GPIB	12
U3019	GPIB	13
U2012	Memory	14
U2017	Memory	15
U2023	Memory	16
U2028	Memory	17

If this step fails, it can be forced to continue checking ROMs; just turn power off and unplug the defective ROM, then turn power on to restart the self-test.

Step 4. The microcomputer checks part of the instrument bus PIA, U3016 on the Processor board. First the microcomputer writes to the A control register and then reads back from the register. Next it repeats these operations with the A data direction register. If either of these attempts fail, the routine stops and pulses the bus LED, DS1036.

Step 5. This step checks part of the GPIA, U2047 on the GPIB board (if installed). The microcomputer resets the GPIA and checks to see that the GPIA is not addressed to talk or to listen. The GPIA is then set to listen-only mode and checked to see that it is addressed to listen. Then the GPIA is set to talk-only mode and checked to see that it is addressed to talk. If any part of this step fails, the test stops and pulses repeatedly the GPIB LED, DS1034.

If the test completes successfully, the microcomputer pulses repeatedly the OK LED, DS1032, to indicate the number of empty memory blocks found. The LED blinks N+1 times, where N is the number of empty ROM sockets (the memory block 1600—1800 is not used). If the GPIB board is not installed, its eight ROM sockets are counted as empty. If the LED blinks more than N+1 times, a ROM (or ROMs) failed to respond in Step 3; look for a possible problem on the chip-select line or on the MSB (bit 7) data line.

If the microcomputer seems to test ok, but does not control the instrument, skip to the Instrument Bus Check, where microcomputer communication with the rest of the instrument is exercised.

Microcomputer Test Mode

A microcomputer test mode is selected by moving jumper P1020 on the Processor board to the TEST position. This hardwires the 6800 data lines to hex 5F. As a result, the 6800 continuously executes a CLRB instruction, repetitively cycling through all of its address space. The instrument does not function in this mode. Rather it sets up a known pattern on the microcomputer address, data, and control lines and at the output of address decoders. This mode allows an attack on problems that prevent the microcomputer from running its self-test check.

NOTE

If CR2025 on the Processor board is missing, it may be added as shown on the Processor diagram to make the correct instruction on the data lines.

Microcomputer Bus. As the microcomputer cycles through its address space, it toggles the address lines. The MSB, A15, has a period of about 1540 ms; the period of A14 through A0 is divided by two from the line above down to the LSB, A0, with a period of about 4.7 μs. The four high-order lines, A15 through A12, are shown in Fig. 4-19. Ignore the narrow pulses that may be evident during the low portion of each cycle.

The data lines on the microprocessor side of U1013 on the Processor board are static; D7 and D5 are low, the others are high. In the TEST position, P1020 disables U1013. On the other side of this buffer, the data lines are being driven by the various memory devices on the bus as they are addressed.

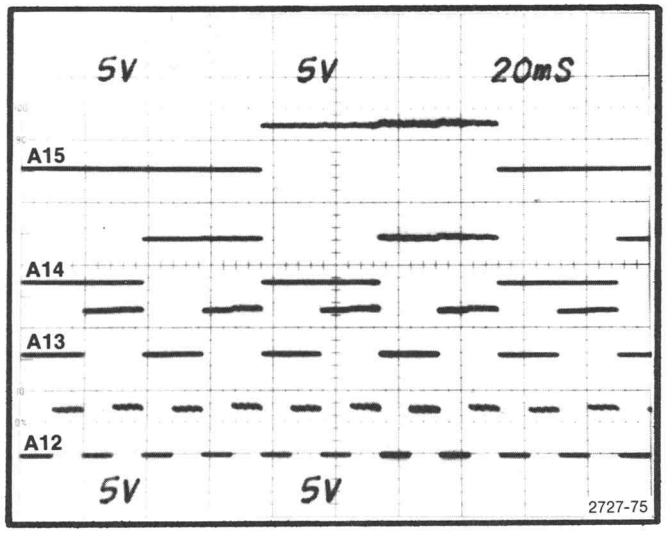

Fig. 4-19. A15 through A12 in microcomputer test mode.

Examining the data lines can locate shorted or open lines—lines inactive at high, low, or in-between states or changing in unision, usually to indeterminate logic levels of +1 to +2 V. A problem related to a particular device may be evident only while that device is addressed; compare a problem that occurs only during a portion of the A15 cycle to the address decoder outputs pictured below.

Processor Address Decoders. Address decoder U2044 on the Processor board sets its outputs low in turn to access block of memory space. See Fig. 4-20, where the Y0 through Y2 outputs are compared to A15. The other outputs follow in sequence with similar pulse widths. The self-test indicators connected to the decoder outputs blink in sequence as the microcomputer cycles through its address space.

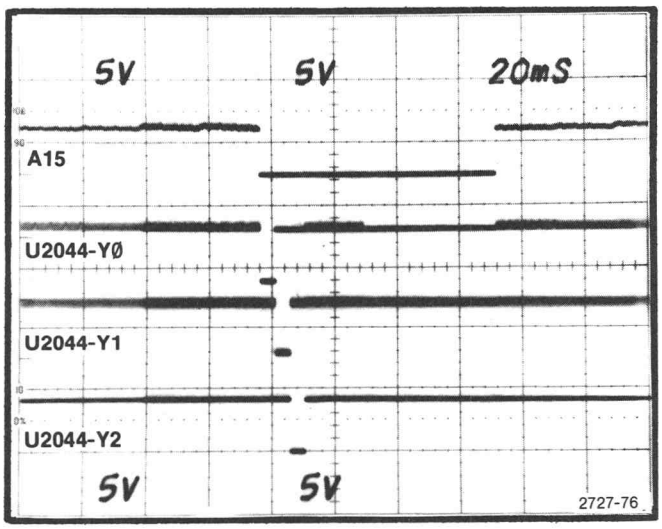

Fig. 4-20. A15 and Y0 through Y2 of address decoder U2044.

A portion of one address block, decoded by U2044, is further decoded by U1037B. Figure 4-21 shows the U1037B enable line on top and below it in order, Y0 through Y2. Y3 is similar in width and follows in sequence.

The narrow pulses evident during the time each output of U2044 and U1037B is asserted result from address lines toggling between microcomputer cycles.

Clocks and Control Lines. The 6800 clock lines are complementary, nonoverlapping square waves with periods of about 1.17 μs. VMA, RESET, NMI, and R/W should be high (logic one). IRQ may be either high or low, depending on how assemblies on the instrument bus powered up.

Memory Address Decoders. Address decoders U1036 and U1038 on the Memory board set their outputs low to access blocks of ROM addresses. These outputs are shown in relation to A15 in Fig. 4-22. The RAM (U2035 and U2032) chip-select lines and option switch register (U1033) enable line are also decoded on the Memory board as shown in part d of Fig. 4-22. The narrow pulses which may be evident during the time each output is asserted can be ignored for the reason noted above under Processor Address Decoders.

Instrument Bus Check Mode

If the microcomputer performs the power-up self-test, but fails to control the instrument properly, the instrument bus check may uncover the problem. The instrument bus check mode may be selected by setting the option switch as shown in Fig. 4-18. In this mode, the microcomputer continuously writes to the instrument bus to exercise it in a repetitive manner. Consequently, the instrument does not operate normally.

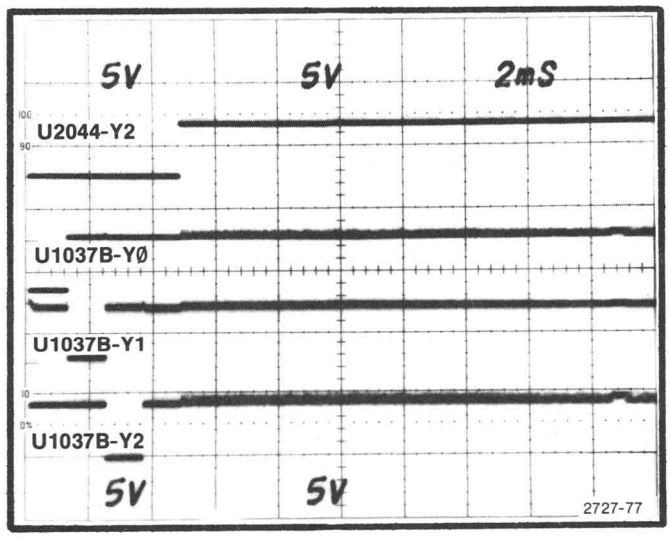

Fig. 4-21. Enable and Y0 through Y2 of address decoder U1037B.

The pattern on the instrument bus toggles DATA VALID and POLL and exercises the address and data lines at separate times. The address lines change when DATA VALID is low and the data lines change when DATA VALID is high. There may be an exception on DB4 through DB0; these lines may continue to change after DATA VALID goes low if an assembly on the bus is requesting service because of the way it powered up. In this case, an assembly or assemblies may respond to the high state of POLL and the changing state of AB7 and attempt to report status.

The pattern for the upper address and data lines is shown in Fig. 4-23. Each lower order line changes at a rate that is twice the next higher line, resulting in 128 cycles on the LSB lines. The initial pulse on the upper four data lines is not part of the divide-by-two pattern and is not repeated on the lower four data lines. By comparing the lines to those in Fig. 4-23, checking that they divide-by-two, it is possible to discover open or shorted lines. Look for lines that stay high or low, change together or at wrong times in the pattern, or go to indeterminate logic levels (+1 to +2 V).

Firmware Operating Notes

The following exceptions to normal instrument operation are related to firmware Version 8.2. The instrument displays its version number on power-up for about two seconds. To see the message, turn power off after the instrument has warmed up, then restore power; the message will appear briefly in the center of the screen.

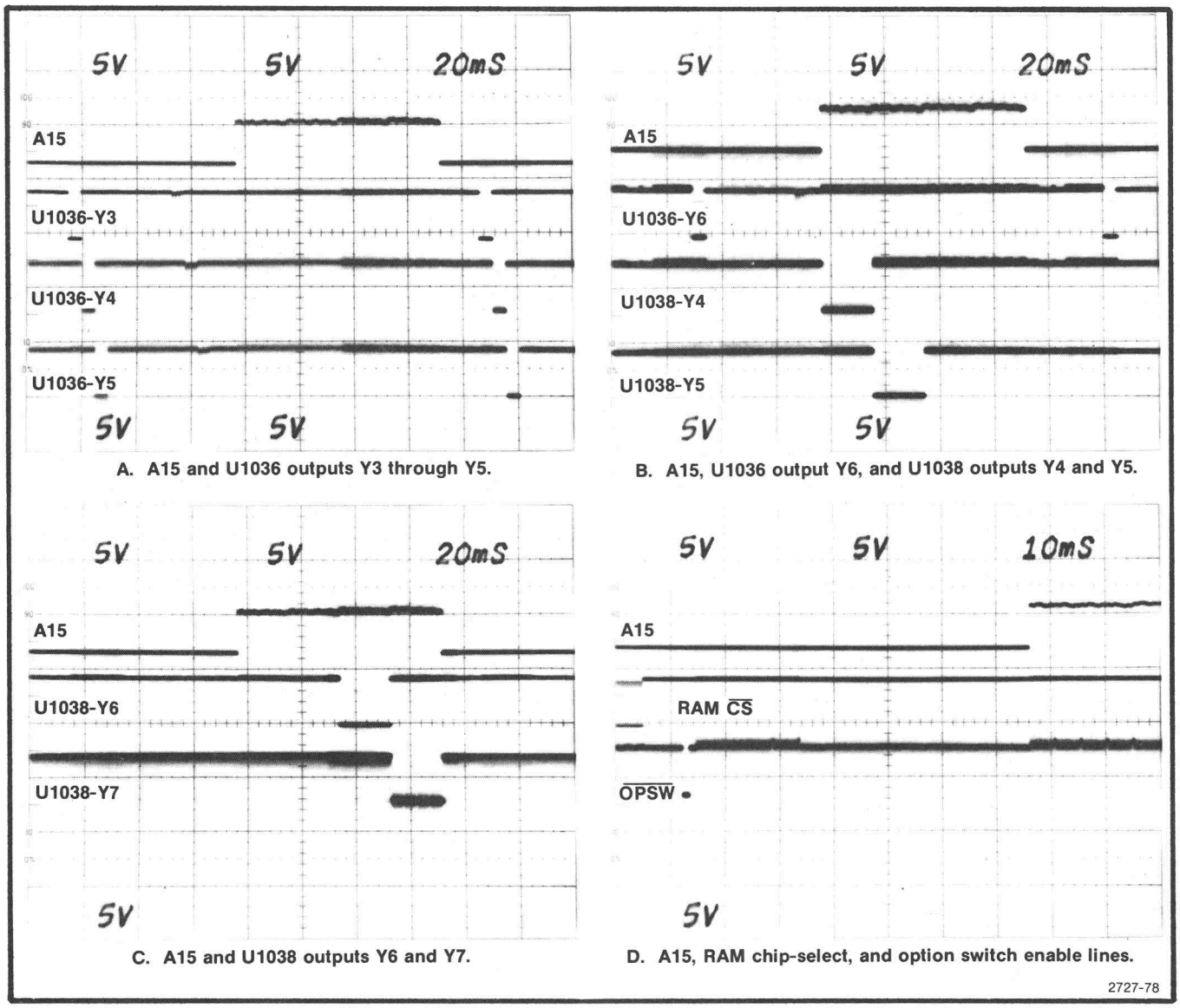

Fig. 4-22. A15 and Memory board address decoder outputs.

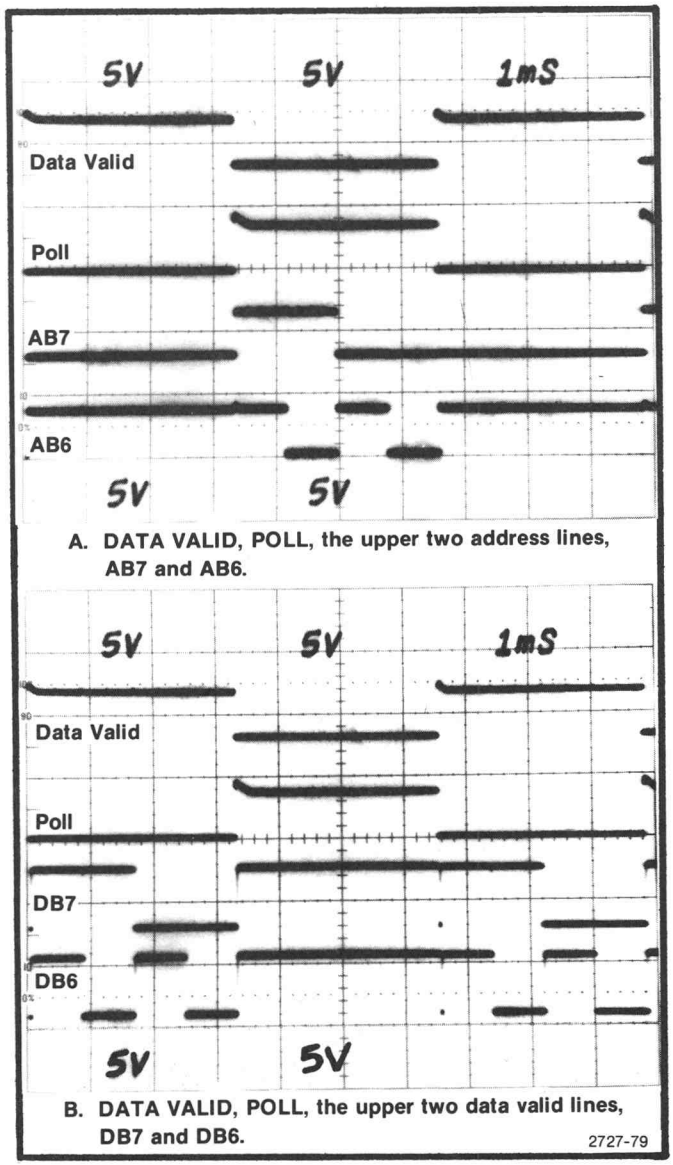

Fig. 4-23. Instrument bus check.

Note 1. The external mixer bias is turned off in bands 1 through 5 whenever span or band is changed. The light remains on, however. If an external mixer is used in these bands, EXTERNAL MIXER must be canceled and then reactivated after every span or band change.

Note 2. The microcomputer may not maintain a calibrated display when AUTO RESOLUTION and AUTO TIME/DIV are selected if a WIDE or NARROW VIDEO FILTER is also selected. This is evident because the UNCAL light comes on. In this case, change RESOLUTION BANDWIDTH or increase TIME/DIV if not set to AUTO for a calibrated display.

Note 3. REFERENCE LEVEL may hang above +30 dBm in the ΔA mode. For example: with a REFERENCE LEVEL of +30 dBm in MIN DISTORTION mode, select the ΔA mode, increase the REFERENCE LEVEL for a readout of +1.00 dBm, then get out of ΔA mode by canceling FINE. The analyzer then does not respond to changes in the REFERENCE LEVEL control. Normal operation can be restored by selecting either 10 dB/DIV, LIN, MIN NOISE, or EXTERNAL MIXER.

Note 4. The attenuator for the RF INPUT may not be set to 60 dB on power-up, even though the RF ATTEN readout on the crt shows 60 dB. The attenuator is correctly set, however, at the first REFERENCE LEVEL change and then matches the crt readout.

The following exception applies to both Vertion 8.2, 8.7, and 8.8.

Note 5. Changing EXTERNAL MIXER from either on or off causes the microcomputer to restore the video filter that was in effect at the last frequency range change. The front-panel video filter lights do not indicate the change, if any was made. To assure that the desired video filter is activated after changing EXTERNAL MIXER selection, reselect the video filter (WIDE, NARROW, or neither).

Note 6. An error 57 message displayed when changing the FREQUENCY control in spans of 2 kHz/div or less can be ignored if it results from tuning to the end of the 2nd LO range. (The microcomputer automatically tunes the 2nd LO, rather than the 1st LO, in narrow spans.) To check whether an error 57 message is valid, turn the FREQUENCY control in the other direction for five turns. If the message is not repeated, it did not indicate a hardware failure, but only that you reached the end of the 2nd LO tuning range.

The following exceptions apply to Version 1.1 in the 492P only.

Note 7. The sense of the parallel-poll bit is reversed when the 492P responds to a parallel poll.

Note 8. The EXTMXR response is not omitted in the SET query response for Option 08 instruments. As a result, the instrument reports an error and does not execute the SET query response. It is recommended that you remove the EXTMXR message unit before transmitting the SET query response back to an Option 08 instrument.

The following exception applies to Versions 1.1 and 1.2 in the 492P only.

Note 9. The INC and DEC arguments for the TIME command do not operate if the display is uncalibrated (UNCAL light is on). Also, if 0 or a negative number is used as an argument for the TIME command, no error is reported (and the command is not executed).

The following notes explain changes incorporated in Version 1.2 firmware.

Note 10. INIT resets the display data pointer to its power-up value: 500, 225.

Note 11. Pressing RESET TO LOCAL while a message including the REPEAT command is executing now limits message execution to 256 times if the message contains WAIT. A SIGSWP command preceding WAIT in the message is ignored after the RESET TO LOCAL button is pressed, so the REPEAT loop completes quickly.

Note 12. The command DELFR OFF is inserted after FINE OFF at the beginning of the SET query response. Also, the DELFR response is transmitted after, rather than before, the FREQ response later in the message. These changes remove uncertainty in how the SET query response would be executed with various combinations of instrument settings.

THEORY OF OPERATION

This section of the manual describes the circuitry in the 492 Spectrum Analyzer. The description begins with a general and functional description related to a block diagram of the major systems within the 492. This is followed with a detailed description of the circuitry within each section; for example, the Display section.

The number in the diamond refers to the corresponding schematic diagram number. Note that these same numbers are included on diagrams. Schematics of all major circuits are given in Volume 2, section 7.

1

FUNCTIONAL AND GENERAL DESCRIPTION

What It Does

The 492 Spectrum Analyzer accepts an electrical signal as its input and displays the signal's frequency components on a crt. Signals can be applied directly to the RF INPUT or, if the analyzer is equipped for external mixer operation, to an external mixer, which extends the measurement range of the 492.

The display of the frequency components of the input signal appears on the crt as a graph where the horizontal axis is frequency and the vertical axis is amplitude. The display can also be plotted on a chart recorder using rear-panel connectors. The 492P, when equipped with option 2, can transmit the display digitally via the IEEE 488 bus.

Manual operation of the 492 Spectrum Analyzer is accomplished through the front-panel knobs and switches. The 492P may also be operated via the IEEE 488 bus using a straightforward language format.

How It Works

The Functional Block Diagram is located at the front of the diagrams section. It relates the major sections in the instrument and shows the main signal paths. Refer to the diagram while reading this general description.

The 492 operates as a swept, narrow-band receiver. As it sweeps a range of frequencies, it moves the crt beam horizontally. When it detects a frequency component of the input signal, it deflects the beam vertically. The center frequency of each span is set by the FREQUENCY control. The frequency range of each span is set by the SPAN/DIV control. The power level represented by the vertical deflection is set by the REFERENCE LEVEL control; this control causes the microcomputer to change the input RF attenuator or IF gain, or both, to bring signals within the display range.

First, Second, and Third Converters

In the 492, this swept-frequency analysis is achieved with a triple-conversion superheterodyne technique.

Each of the three frequency converters consists of a mixer, a local oscillator, and appropriate filters. Only one frequency can be properly converted in each mixer and pass through all bandpass filters and reach the detector. This analysis frequency can be changed simply by changing the frequency of any of the local oscillators in the converters.

The first converter, usually referred to as the front end, converts the input signal frequency to an intermediate frequency (IF) which may be either 829 MHz or 2072 MHz depending on which band is in use. Although the internal mixer covers signals from 50 kHz to 21 GHz, an external mixer may be used for analysis through the millimeter wavelengths (unless this capability is deleted by option 8). If the 492 is equipped with option 1, a preselector and a lowpass filter attenuate unwanted signals when the internal mixer is used. This prevents most images and spurious responses.

There are actually two second converters in the 492; the appropriate converter is selected automatically for each band so the input frequency range does not overlap the first IF frequency. Each second converter has its own local oscillator (LO), mixer, and filters. Both convert the signal to 110 MHz and send it to the third converter.

The third converter amplifies the 110 MHz IF signal and converts it to the final intermediate frequency of 10 MHz. The third converter passes the signal to the IF section for detection.

IF Section

The IF section analyzes how much power is present in the frequency component that has been converted to 10 MHz. Three functions are performed here:

1) Weak signals can be amplified by a set of switchable amplifiers so that they may be analyzed. By amplifying the signal, the vertical window (dynamic display range) is shifted up or down. The REFERENCE LEVEL control selects the gain (and input RF attenuation as a pair) to frame this window.

2) The signal is bandpassed by any of several 10 MHz bandpass filters selected by the RESOLUTION BANDWIDTH control. The greater the selectivity, the better two closely-spaced signals can be resolved, but narrow bandwidths require longer sweep times. The microcomputer selects the best combination of bandwidth and sweep time, unless overridden by the operator.

3) The remaining signal is detected by a combination of a logarithmic amplifier and a linear amplitude detector. The output of this combination is a voltage that corresponds to the signal strength in decibels. This amplitude detector output is sent to the vertical channel of the display section to show the strength of the particular component.

Display Section

The display section draws the display on the crt screen. Vertical deflection of the beam is increased as the output of the amplitude detector increases. The horizontal position is controlled by the frequency control section and corresponds to the frequency analyzed at that instant. As the 492 sweeps from low frequencies to high frequencies during its analysis, the beam is swept from left to right. Any time a signal is encountered during the analysis, a vertical deflection shows the strength of the signal at the horizontal position corresponding to the frequency. The result is a display of amplitude as a function of frequency.

The video amplifier scales the output of the detector for vertical deflection in dB/div or performs a log/linear conversion, depending on the vertical display mode. The video processor filters the video if either the wide or narrow filter is selected.

The display section displays control settings on the crt based on data from the microcomputer.

The sweep is often rapid enough to give a flicker-free display, but at times the sweep must be slowed below the flicker rate. With Option 2 the display can be recorded and refreshed at a flicker-free rate by the digital storage section. The 492P can read out the display data from digital storage through the IEEE 488 interface.

Frequency Control Section

The instantaneous frequency being analyzed is controlled by the frequencies of the local oscillators. To analyze another frequency, a local oscillator frequency is changed so that the new frequency is converted by the three converters to 10 MHz and passes through the IF section. Each converter section has its own local oscillator. Only the local oscillators of the first two converters are changed to vary the frequency being analyzed; the 3rd LO remains fixed.

The 492 periodically sweeps and analyzes a frequency range centered about a frequency set by the FREQUENCY knob. The FREQUENCY knob tunes the first and second local oscillators. The analyzer sweep is generated by the sweep generator and the span attenuator. As the sweep generator sweeps through its range, the trace is deflected across the screen on the front panel. The frequency sweep is controlled by the span attenuator, which scales the sweep according to the current SPAN/DIV. The output of the span attenuator drives the 1st LO to sweep wide spans and the 2nd LO to sweep narrow spans. Option 3 adds phase-lock circuitry to stabilize the 1st LO in narrow spans.

If the 492 is equipped with option 1, the frequency control section tunes the preselector to track the signal frequency being detected.

Digital Control Section

Internal functions are controlled from the front panel through a microcomputer. An internal instrument bus allows communication between the microcomputer and all parts of the instrument. Front-panel control data goes to the microcomputer on this bus. The microcomputer controls circuit functions such as the span attenuator, IF gain, and crt readout on this bus. The microcomputer also receives information from circuit functions such as the sweep and phase lock circuitry on this bus.

The 492P may be controlled remotely through the IEEE 488 bus, which interfaces to the microcomputer through a General Purpose Interface Bus (GPIB) board. The IEEE 488 connector is located on the rear panel of the instrument. The control language corresponds closely to front-panel operation of the 492P.

Other Systems

The power supply system provides regulated dc power for all parts of the instrument. The switching supply is capable of regulation over wide line frequency and line voltage ranges.

The cooling system consists of an intake on the bottom of the case, air passages within the instrumment, a fan, and a rear panel exhaust. Air is routed to all sections of the instrument in proportion to the heat generated by that section. Internal temperature rise is small for reliable operation.

Signal, power, and control connections between sections are accomplished by a mother board distribution system. Most circuit boards plug onto the mother board from the top side. Components on the rf deck underneath the mother board are also connected to the mother board through smaller connectors.

For Further Information

The systems in the 492 are described in nine sections as shown by the Functional Block Diagram. Nine block diagrams representing these systems follow the Functional Block Diagram.

For more detailed information, the instrument is divided into circuit diagrams for each assembly or part of an assembly. Each schematic is accompanied by a detailed block diagram and a parts location illustration. These are printed in the diagrams section with look-up tables to aid in finding components on either the schematic or parts location illustration.

DETAILED DESCRIPTION

The following description is arranged by sections or systems; such as 1st Converter, 2nd Converter, etc., followed by circuit analysis of the circuits within that section. Each system/section is introduced with a description of the system using the block diagram found in the Diagrams section of the manual. This is then followed with a description of of each circuit board or major circuit within the system.

2

1ST CONVERTER CIRCUITS

The 1st Converter mixes the incoming RF signal with a tunable local oscillator signal to produce intermodulation products. All of these are filtered out except the 2072 MHz and 829 MHz IF signals, which are applied to the 2nd Converter circuit.

The 1st Converter consists of the following major segments: 1. The RF Attenuator, which sets the input power to the analyzer. 2. The Preselector (option 1 only), which provides the selectivity required to eliminate spurious responses and image frequencies. 3. The 1st LO (Local Oscillator), which provides a tunable signal for the 1st Mixer. 4. The Power Divider, which splits the signal from the 1st LO for application to the 1st LO OUTPUT front-panel connector, and 1st Mixer. (The 1st LO signal passes through the Phase Gate to the 1st Mixer if Option 3 is included.) 5. The Phase Gate, which couples a portion of the oscillator signal to a phase gate that compares the phase of the oscillator signal against a strobe signal from the phase lock system. 6. The Transfer Switch, which permits the use of an external mixer with the analyzer. 7. The Filter and Diplexer circuits, which select only the 2072 MHz and 829 MHz IF signals for application to the 2nd Converter. 8. The RF Interface circuits, which select the input RF attenuation, control the selection of the IF frequency (2072 or 829 MHz), and control the transfer switch.

The input RF is fed through a 0 to 60 dB decade attenuator to the 1st Mixer (if Option 1 is not included) via a 3-dB attenuator. The attenuator matches mixer impedance and protects the mixer diodes from spurious or static signals.

The 1st LO feeds signal to the Mixer in one of two ways: directly from the Power Divider, or through the Phase Gate and Bias Return if Option 3 is installed. (The Phase Gate and Bias Return stages incur very little loss.) The Phase Gate couples off a small amount of signal (approximately 0 dBm) to compare with a strobe signal from the Phase Lock system. The output is an error signal that is used by the phaselock system for determining the FM tuning current for the 1st LO. The Bias Return provides high-pass filtering for the 1st LO and a dc return for the 1st Mixer diodes.

The current tuned 1st LO output is mixed with the incoming RF, and the IM products are routed through the Transfer Switch to the 2.072-GHz Directional Filter. (Option 8 deletes the Transfer Switch.) This filter is broadband, and provides a constant match to the 1st Mixer output at all frequencies. The filter couples the 2.072 GHz IF to the 2nd Converter through a 4.5-GHz Low-pass Filter and directly couples other IM products to the Diplexer. The low-pass filter removes odd multiples of 2.072 GHz that are re-entrant modes of the Directional Filter. The Diplexer provides dc path for mixer bias and rejects frequencies above 829 MHz.

The single balanced 1st Mixer affords less IM products than an unbalanced mixer, so the conversion loss is inherently less. It also cancels local oscillator signal feed-through to the RF input port.

In standard instruments, an external mixer port and Transfer Switch are included. Option 8 deletes these features. The external mixer feature permits an external mixer to be connected to the instrument to serve as the 1st IF source. This feature is primarily used for waveguide mixers.

For Option 1 instruments, a Preselector or 1.8 GHz Low-Pass Filter is inserted in the RF signal path. The signal passes through a low-band/high-band switch, which selects the Preselector or the 1.8 GHz Low-pass Filter. The 2 GHz Limiter protects the 1st mixer diodes from signals 2 GHz and above by reflecting RF energy back to the input source. The 1.8 GHz Low-pass Filter, attenuates signals above 1.8 GHz to reduce spurious responses caused by RF signals above 1.86 Hz feeding through to the 1st mixer.

The Preselector is the signal path for frequencies from 1.7 to 21 GHz. The Preselector is a tunable filter that tracks with the 1st local oscillator. This prevents other RF signals from feeding through to the 1st mixer and eliminates spurious responses from external sources. From the Preselector the signal passes through a 3-dB attenuator, which improves the return loss of the Preselector, to the 1st Mixer.

RF INTERFACE CIRCUITS 27

Introduction

Refer to the block diagram adjacent to Diagram 27. The RF Interface circuits receive address and instruction data from the Microcomputer, decode it, and control the RF Attenuator, Transfer Switch, and IF selection. The circuit consists of the Digital control circuits, which decodes the address and control the input data to the buffer. The RF

Interface section also includes the driver circuits, which furnish the current required to drive the three functions mentioned at the first of this paragraph. Refer to Diagram 27.

Digital Control

Address decoder U2045 enables the data at the input of U3046 whenever address 4F is selected by the Microcomputer. Table 5-1 lists the purpose of each data line from the buffer.

Transistors Q2025 and Q3028 are enabled by a negative pulse from the microcomputer. The two transistors raise the Vcc of the three attenuator drivers (U3034, U3029, and U3038) to +16 volts for about 100 ms; this furnishes sufficient voltage to energize the attenuator solenoids. Each of the attenuator driver output lines is protected from the inductive kick that occurs when the solenoids change state by a diode.

Transfer Switch

Amplifier U4023, transistors Q3025 and Q3024, plus related components form the driver circuit for the Transfer Switch. To select the external mixer, the microcomputer sets line Q5 high. The change is coupled through C4026 and R4012, which hold U4023 at a low output state for a few milliseconds. This lets Q3025 conduct, and the Transfer Switch selects the external source. If the microcomputer selects the internal mixer, it pulls line Q5 low, switching U4023 in the opposite direction, which causes Q3024 to conduct. The Transfer Switch energizes in the opposite direction, and the internal mixer is part of the circuit. Diodes CR3018 and CR3017 protect the transistors from voltage spikes induced by the Transfer Switch when it changes state.

Timer

M1019 is an electrochemical timer. The current through R1015 causes the copper band to progress along the scale that is calibrated for a duration of 5000 operating hours.

TABLE 5-1
RF INTERFACE LINES

Line	Purpose
Q1	Enables 10 dB attenuator
Q2	No connection
Q3	Enables 30 dB attenuator
Q4	Enable current drivers Q2025 and Q3028
Q5	Enables transfer switch driver
Q6	Selects 829 MHz IF (high state) or 2072 MHz IF (low)
Q7	Enables 20 dB attenuator
Q8	Enables baseline clipping

RF CIRCUITRY (12)

Introduction

Refer to the block diagram adjacent to Diagram 12. The input signal is processed through a calibrated 0-60 dB attenuator (10 dB steps) and applied to the 1st Mixer. Option 1 instruments add a limiter, 1.8 GHz low-pass filter, or a current-tuned preselector between the attenuator and the 1st Mixer to improve selectivity. The IF output of the 1st mixer is sent through Transfer Switch S13 to a directional filter where 2.072 GHz and 829 MHz intermediate frequencies are selected for the 2072 MHz 2nd Converter or 829 MHz 2nd Converter. The 2072 MHz IF is fed through a 4.5 GHz low-pass filter (to reject the re-entrant modes of the directional filter) to the 2072 MHz 2nd Converter. The 829 MHz signal is fed through a diplexer and a 4.5 GHz filter before it is applied to the 829 MHz IF stages. The 4.5 GHz filter is used to reject the re-entrant modes of an internal filter to the 829 MHz 2nd Converter. Two intermediate frequencies are used in the analyzer to prevent baseline rise due to local oscillator feedthrough and crossover intermodulation products.

The 2072 MHz IF is selected for bands 1 and 5, plus the waveguide band. The 829 MHz IF is selected for bands 2-4. With Option 1 installed, band 1 frequency range is limited to 1.8 GHz, due to a low-pass filter. A tunable preselector is used instead of the low-pass filter when bands 2 through 5 are used. Refer to Diagram 12 while reading the following description.

RF Signal Path

The 0-60 dB step attenuator consists of three sections (10 dB, 20 dB, and 30 dB), which are controlled by relays that receive drive signals from the RF Interface circuit. The output of the attenuator is connected directly to the 1st Mixer through a 3-dB attenuator in analyzers not equipped with Option 1. The attenuator protects the mixer diodes from excessive input voltages and static discharges. In analyzers equipped with Option 1, the Preselector and related circuitry is placed between the step attenuator and the 3-dB attenuator.

1st Mixer

The 1st Mixer receives the RF signal through the 3-dB attenuator, and generates the intermodulation products that are filtered to provide the low and high IF signals. The mixer is a single balanced design, which has less conversion loss in comparison with unbalanced mixers. The local oscillator input is split through a broadband multi-section coupler, whose outputs are equal in power, but 90 degrees out of phase. An additional 90 degree phase shift is cascaded with the appropriate signal to create a 180 degree phase difference that is applied across a pair of series-connected Schottky diodes. The result is that the diodes are alternately switched on and off as the local oscillator cycles. The node between the two diodes is isolated from the 1st LO input by about 30

dB, so the RF input is applied to this node. The blocking capacitor at the input connector permits broadband signal application from the RF port, while blocking dc diode bias from appearing at the analyzer input. Dc return for the mixer is by way of the Transfer Switch, Directional Filter, Diplexer, and 4.5 GHz filter through the 829 MHz IF circuits. The mixer bias voltages also come to the mixer through the same path.

Not counting the IF filtering circuitry, the fundamental conversion loss of the 1st Converter is about 14 dB; third harmonic conversion loss is about 24 dB. The Schottky diodes are mounted in a removable assembly that can be extracted or inserted in the main mixer module.

Power Divider

The Power Divider splits the output of the 1st LO (YIG oscillator) to isolate the 1st Mixer from the 1st LO OUTPUT front-panel connector. The unit is esentially two multisection directional couplers that are multi-port cascaded to produce two ports having equal power. The isolation between output ports is greater than 15 dB at operating frequency. The Power Divider also provides an improved load to the local oscillator.

1st Local Oscillator

The 1st LO is a YIG (Yitrium-Iron-Garnet) oscillator that has a tuning range of 2.072 to 6.35 GHz. The oscillator assembly includes the interface circuit board that couples operating and tuning voltages from the 1st LO Driver, Span Attenuator, and Error Amplifier circuits to the oscillator.

The + 15V1 voltage provides operating bias for the oscillator. The supply is protected by VR1010, C1016, and R1011. The second supply, + 15V2, is for future applications. CR1018 and CR1019 stop transient voltages from entering the tune voltage coils. It also protects the driving circuits from the transients induced when degaussing.

Relay K1015 is closed when the FM Coil is used to tune the oscillator. To prevent the tune volts coil from moving the oscillator frequency while the FM Coil is in operation, C1012 and C1014 are connected across the tune coil. The heater keeps the YIG sphere at a constant temperature for best stability.

Transfer Switch

The Transfer Switch is a three-port coaxial switch that permits application of 1st IF signals from inside or outside the analyzer. This feature is primarily used for by-passing the 1st Converter circuitry. The function is controlled by circuitry on the RF Interface board. It is automatically actuated when waveguide bands are selected, or the front-panel EXT MIXER pushbutton is pressed.

Directional Filter

The Directional Filter (FL16) couples the 2072 MHz signal to the 2nd Converter via the Low-pass and Band-pass filters. As intermodulation products (IM) flow through FL16, it induces a selected current into a one-wavelength distributed ring, which couples the 2072 MHz IF signal out to FL11, the low-pass filter. The remainder of the IM products pass on through, since the ring is excited only with 2072 MHz signals. The bandwidth of this unit is approximately 45 MHz. The unfiltered signals are passed on to the Diplexer.

High IF Filters

The 2072 MHz signal from the Directional Filter is passed through FL11, a low-pass filter that rejects all signals above 4.5 MHz. The second filter, FL14, rejects intermodulation products both above and below 2072 MHz.

Diplexer and Filter

The Diplexer filters the 829 MHz IF signal from the mixer output and sends it to the 2nd Converter through FL15. The Diplexer also provides a good match to the 1st Mixer IF port at frequencies above 1 GHz. This match is important for the overall flatness and frequency response of the analyzer.

Preselector

The Preselector, which is included when Option 1 is installed, consists of two selector switches, a 2 GHz limiter, a 1.8 GHz low-pass filter, a 1.7-18 GHz filter, and a 3-dB attenuator.

S10 and S11 are coaxial relays that switch the stage input and output to select either the Low-Pass Filter and Limiter or the Preselector and 3-dB attenuator. The relay coils are driven by circuitry on the Preselector Driver board. The Low-pass Filter path is used only on Band 1; the Preselector operates on all the other bands.

The 2 GHz Limiter operates from 100 kHz to 2 GHz. It has a linear two-port transfer characteristic of unity (minus 1 dB) until the input exceeds +5 dBm. Above this point, the internal detector diodes conduct, reflecting part of the RF input energy back to the source. As the input level rises, the limiter reflects more signal, thus limiting the amount that can pass through.

The 1.8 GHz Low-pass Filter, strips the incoming signal of any frequencies above 1.8 GHz and passes the signal below 1.8 GHz on to the output segment of the selector switch (S11).

The Preselector is a 1.7-18 GHz YIG Filter that provides high selectivity and image-frequency rejection. Tuning current, which is near 500 mA at 21 GHz, is provided by the Preselector Driver circuits. The Preselector operates on bands 2, 3, 4, and 5. The signal from the Preselector passes through a 3 dB attenuator to the output section of the Filter Selector switch. The attenuator is to isolate the Preselector, which is sensitive to loading on its output.

3

2ND CONVERTER

Two 2nd Converter systems are used in the 492 Spectrum Analyzer. One converts 2072 MHz to 110 MHz; the other converts 829 MHz to 110 MHz. Only one converter is operational at any time, and is selected as a function of the measurement band being used. The selection of the IF for each band is shown in Table 5-2 along with the center frequency range and the local oscillator frequency range. Note that this table includes Option 1 characteristics.

Two IF's are used by the 2nd Converter for the following reasons: 1) To eliminate IF feedthrough in band 2 and reduce or eliminate higher order spurs in bands 3 and 4. 2) Because of the limited tune range of the 719 MHz LO, the lower IF cannot be used above band 4. 3) If a measurement band were to include the first intermediate frequency within its range, it is possible for some input signals admitted by the preselector to pass through the 1st Converter (without conversion), into the 2nd converter at the 1st intermediate frequency. The resultant spurious output will cause the baseline level on the screen to raise, and could possibly obscure real signals. By using two selectable 2nd Converters, the analyzer can have overlapping measurement bands that do not include the first intermediate frequency, and completely avoid the problem.

The 2072 MHz 2nd converter mixes the 2072 MHz, from the first converter with the output from a cavity oscillator. This local oscillator is swept over a 7.5 MHz range. At the converter input, a four-cavity bandpass filter is used to pass only the 2072 MHz 1st IF signal and prevent unwanted signals generated within the 2nd Converter from passing back through to the 1st Converter. A diode mixer is used to mix the 2072 MHz IF input and the local oscillator signals to generate the 110 MHz second IF output. The 110 MHz output passes through a 110 MHz low-pass filter that blocks higher frequency signals from the mixer.

The 829 MHz 2nd Converter uses a phase-locked voltage controlled oscillator to produce the 719 MHz signal that is mixed with the 829 MHz first IF signal. The swept 2182 MHz 2nd local oscillator is used as a reference for the 719 MHz local oscillator. The 719 MHz oscillator is designed so that it can be disabled upon command from the microcomputer in the IF selection process. The phaselock circuit maintains a constant relationship between the two local oscillators as the 719 MHz oscillator is swept over a 2.5 MHz range. A four-section coaxial bandpass filter is used before the mixer to exclude any RF signals other than the desired 829 MHz first IF. Again, a diode mixer is used to mix the 829 MHz input and local oscillator signals to produce the 110 MHz second IF output.

Selection between the two IF signals also takes place within the 829 MHz converter system. Under command of the microcomputer (by way of the RF Interface circuits), a diode selector switching network connects one of the two 110 MHz second IF signals to the output for application to the 3rd Converter.

2072 MHz 2ND CONVERTER 13

The 2072 MHz 2nd Converter converts the 2072 MHz signal output from the 1st Converter to 110 MHz for eventual application to the 3rd Converter. The assembly consists of a low-loss narrow-band four-cavity filter connected through an internal cable to a low conversion

TABLE 5-2
2ND CONVERTER IF SELECTION

Frequency Band	Center Frequency Range	Local Oscillator Frequency (MHz) Range	Converter System IF
1	0-1.8 GHz	2182 ± 3.75	2072 MHz
2	1.7-5.5 GHz	719 ± 1.25	829 MHz
3	3.0-7.1 GHz	719 ± 1.25	829 MHz
4	5.4-18 GHz	719 ± 1.25	829 MHz
5	15.0-21.0 GHz	2182 ± 3.75	2072 MHz
6	18.0-26.5 GHz	2182 ± 3.75	2072 MHz
7	26.5-40.0 GHz	2182 ± 3.75	2072 MHz
8	40.0-60.0 GHz	2182 ± 3.75	2072 MHz
9	60.0-90.0 GHz	2182 ± 3.75	2072 MHz
10	90.0-140.0 GHz	2182 ± 3.75	2072 MHz
11	140.0-220.0 GHz	2182 ± 3.75	2072 MHz

loss narrow-band diode mixer, a 110 MHz low-pass filter, and a mixer biasing circuits that will disable the mixer when directed by the microcomputer.

Four Cavity Filter

The Four Cavity (bandpass) Filter, which is depicted on Diagrams 11, 12, and 13, is designed to pass only the 2072 MHz IF signal to the mixer and to reflect any other frequencies back to the 1st Converter for termination. In addition, the filter keeps the converter LO and mixer products from entering the 1st Converter.

This filter is designed for a 1 dB bandwidth of 15 MHz and an insertion loss of 1.2 dB. Each end resonator is capacity coupled to external circuits through a coupling hat plugged into a 3 millimeter connector. Intercavity coupling is provided by coupling loops that protrude from the machined filter top. The resonant frequency of each cavity is determined primarily by the depth of a gap in the underside of the filter top, and is fine tuned with a tuning screw on the side of each cavity. All of the tight machining tolerances are confined to the top. Thus, the main cavity milling need not be a high precision part. When properly tuned, using a network analyzer, the filter return loss is greater than 25 dB from either end (in a 50 ohm system). Figure 5-1 shows a cross sectional view of the filter; figure 5-2 shows the equivalent electrical circuit. Refer to Diagram 13 while reading the following.

Mixer Circuit

The Mixer circuit in the 2072 MHz 2nd Converter is of the single-balanced, two-diode type, and consists of the mixer, an operational amplifier bias circuit, a delay line, and a low-pass filter. In operation, both diodes of the mixer are turned on and off by the output signal from the 2181 MHz Cavity 2nd Local Oscillator, through coaxial connector P183. Note that, although the diodes are connected for opposite polarity, both are turned on at the same time because of the 180-degree phase shift delay line in the input line to the upper deck. Also note that the diodes are matched and must both be replaced if one fails.

2072 MHz RF from the Four-Cavity Filter enters the mixer, where it is switched on and off at a 2182 MHz rate by the mixer diodes. Conduction of the diodes is controlled by the much stronger 2181 MHz LO signal. Several mixing products result; one, the difference frequency of 110 MHz, is separated from the others by a low-pass filter for use as the IF output.

The two inductors and one capacitor at the output of the mixer form a low-pass filter that passes 110 MHz unattenuated to the 829 MHz 2nd Converter via coaxial connector P182. Capacitors at each of the three inputs to the mixer function as dc blocking capacitors to keep the diode bias from being impressed upon the RF and local oscillator lines.

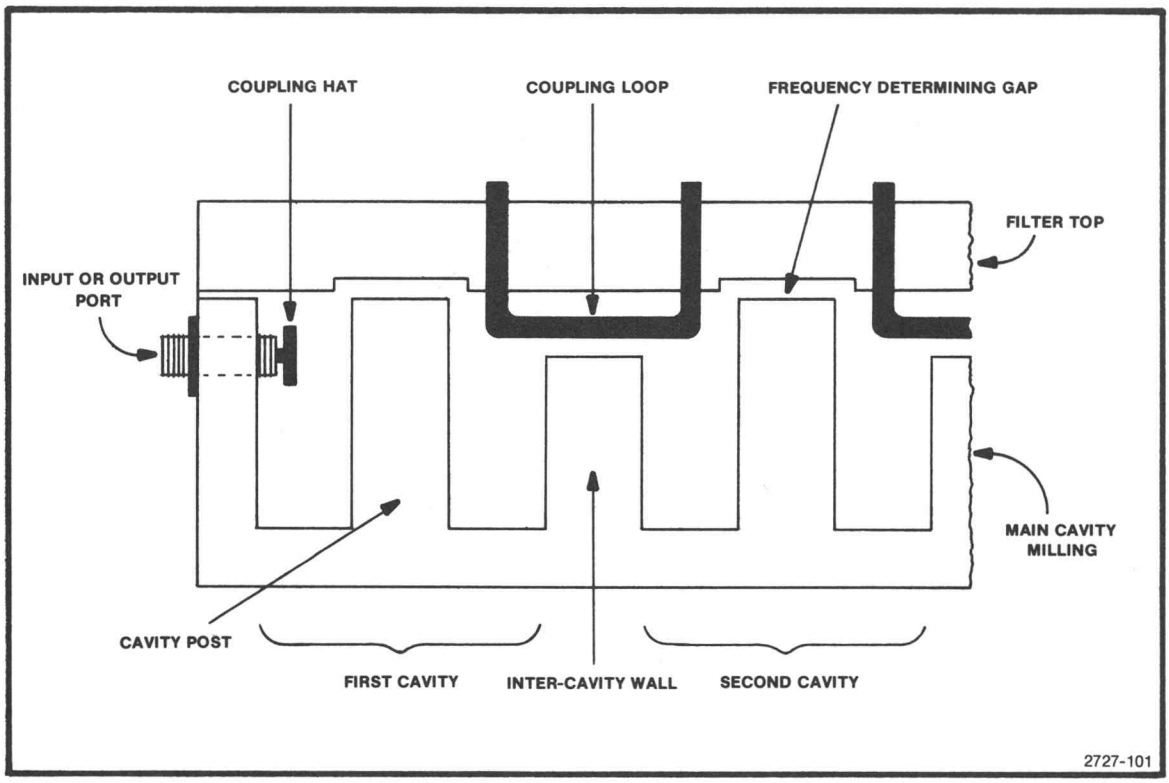

Figure 5-1. Filter cross-section view.

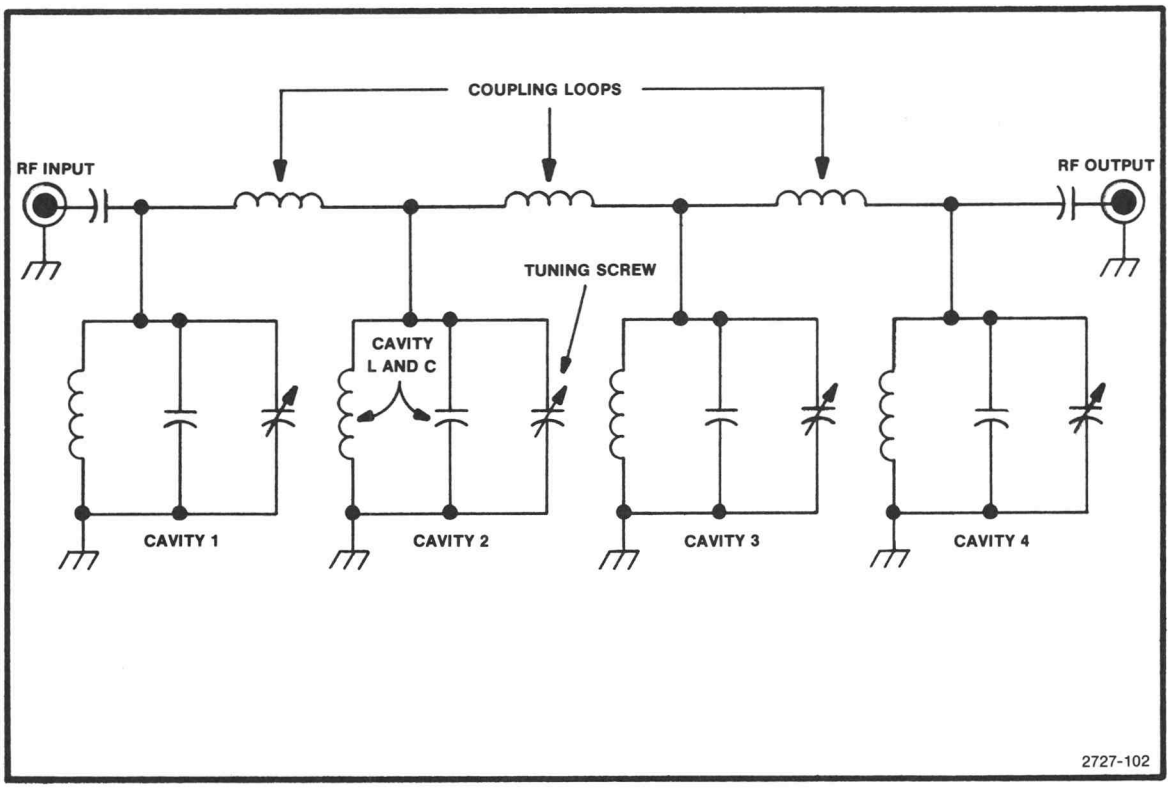

Figure 5-2. Filter equivalent circuit.

The bias circuit, which consists of operational amplifier U1014 and the associated components, establishes the bias for the mixer diodes and also provides the means for effectively switching the mixer off (under control of the microcomputer). When the mixer is active, each diode has approximately 2 mA of forward bias. For this condition, the IF SELECT signal from the Z Axis/RF Interface circuits (applied through feedthrough capacitor C182) is low. This causes the output from U1014A to be at +14 volts and the output from U1014B to be −14 volts. Diodes CR1014 and CR1018 are thereby reverse-biased. Thus, the series resistances of potentiometer R1019 and resistor R1014, and potentiometer R1010 and resistor R1017 provide forward bias to the diodes. The potentiometers provide for balancing the bias levels.

In operations in which the mixer is not active, the IF SELECT signal is high. This reverses the states of the U1014 outputs and forward-biases diodes CR1014 and CR1018. With these diodes conducting, resistors R1014, R1016, R1017, and R1018, form two voltage dividers that set the reverse bias to the mixer diodes at 5 volts. This effectively turns the mixer off, and attenuates the 110 MHz signal by about 55 dB.

Precision External Cable

The external cable length that connects the Four-Cavity Filter output signal to the mixer circuit is critical. The following paragraphs describe the reasons for this.

Cavity 2nd Local Oscillator 38

Refer to the block diagram adjacent to Diagram 38. The Cavity 2nd Local Oscillator generates the 2182 MHz signal that is: 1) mixed with the 2072 MHz signal from the 1st Converter to produce the 110 MHz intermediate frequency in the 2072 MHz 2nd Converter, and 2) used as a reference in the harmonic mixer in the phase lock circuit of the 829 MHz 2nd Converter. The oscillator is a low noise cavity oscillator that free-runs at a nominal frequency of 2182 MHz, but is tunable over a range of 7.5 MHz. A relatively large resonant cavity with very high Q allows the oscillator to operate at low noise levels and with a power output of +10 dBm. Refer to Diagram 38.

Two equivalent schematic diagrams are shown in Figure 5-3. Figure 5-3A shows a direct connection representation; the lower (Fig.5-3B) is the RF equivalent.

As shown in Figure 5-3B diagram, transistor Q1 operates as a common emitter oscillator with positive feedback in the collector circuit. It is biased to operate with an emitter current of approximately 30 milliamps. The collector is coupled to the tunable resonant cavity by a coupling screw. Line length between the oscillator collector and the coupling screw is set by an adjustable wiper strap.

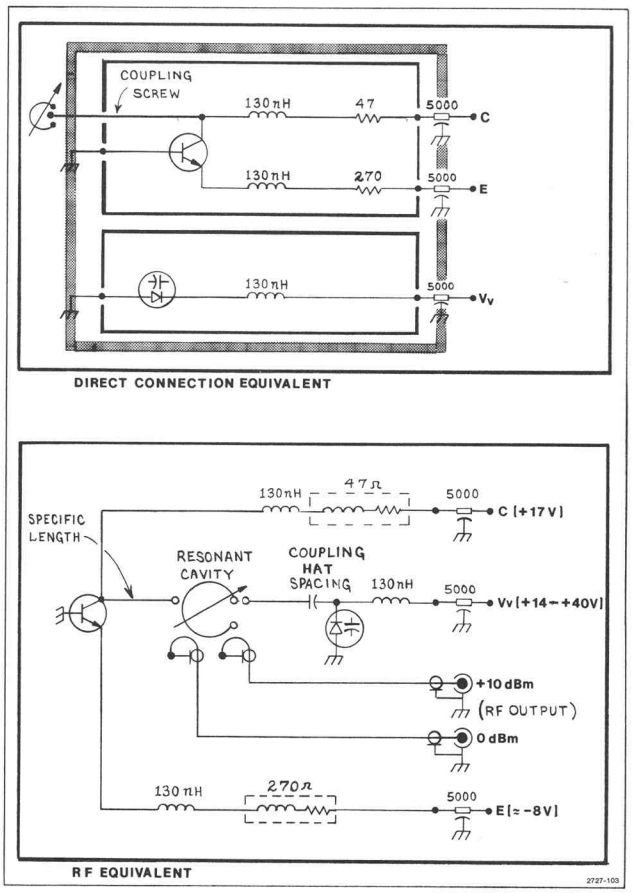

Figure 5-3. 2182.0 MHz Cavity LO equivalent circuits.

Energy distribution inside the cavity is such that E fields are at the top of the cavity and magnetic (H) fields circulate at the bottom. Energy is extracted from the tank circuit (cavity) by inductive coupling near the bottom of the cavity. The output connectors, with attached coupling loops, are rotated to adjust the power output level from the oscillator.

Tuning of the oscillator frequency is by means of a varactor diode that is controlled by a 15 to 40 volt bias signal from the Shaper and Bias circuit. This signal varies the oscillator frequency over a 7.5 MHz range. The diode is located near the top of the cavity and is coupled to the cavity by a capacitive coupling hat (E-field coupling). RF energy in the coupling hat is decoupled from the varactor bias feedthrough by an inductor. The spacing between the hat and the post determines the sensitivity for the diode tuning. (This is an adjustment that is performed during manufacture. No attempt should be made to readjust spacing because diode package cracking may occur.)

The two output connectors are adjusted for output levels of +10 dBm for the 2072 MHz 2nd Converter and 0 dBm for the 829 MHz 2nd Converter. Several products and harmonics of the local oscillator and RF input frequencies are allowed to exit the mixer via the RF input port. Two significant products are the image (RF input minus the 2nd local oscillator) and the sum (RF input plus the 2nd local oscillator). There is enough energy in these two signals to warrant efforts to recover that energy.

Only the RF signal at 2072 MHz can pass through the Four Cavity Filter. Thus, any other frequency applied to the filter (that is, signals exiting the mixer via the RF port) is reflected back to the mixer by the filter. If the cable between the filter and the mixer is the correct length, the most significant reflected signals (that is, the image and the sum) can be returned to the mixer in phase and converted into additional energy at the intermediate frequency. This technique is called "image enhancement mixing" and typically improves conversion loss by approximately 2 dB at the design frequencies.

The image frequency in this instance is very near the RF. A very sharp cut-off filter is thus required to pass the RF, yet reflect the image. The Four-Cavity Filter performs this function.

829 MHz 2ND CONVERTER (15)

IF Section

Refer to the block diagram adjacent to Diagram 15. The 829 MHz 2nd Converter converts the 829 MHz signal output from the 1st Converter to 110 MHz for application to the 3rd Converter, and provides the switching capability for the microcomputer controlled selection of either the 2072 or the 829 MHz converter system. The converter circuits consist basically of an input diplexer, an amplifier, a bandpass filter, a mixer, and a diode switch. Refer to Diagram 15 while reading the following description.

829 MHz Diplexer Circuit

The Diplexer passes signals at 829 MHz with minimum attenuation (approximately 1 dB) and has a pass-band of approximately 200 MHz. All frequencies outside the pass-band, from approximately 50 kHz to 2 GHz, are terminated in 50 Ω loads with a match of at least 10 dB. Figure 5-4 shows a simplified schematic of the diplexer.

At 829 MHz, the series resonators provide a low-impedance path from input to output. (Note on Diagram 15 that the input is from the 1st Converter through coaxial connector P231.) Ideally, none of the signal is lost in the 50 Ω resistors because there is a zero impedance path around those resistors. The parallel resonator appears as an open circuit at 829 MHz.

At frequencies above or below the pass-band, the series resonators appear as large reactances, shifting the primary signal flow through the 50 Ω resistors. Also, the out-of-band impedance of the parallel resonator is small compared to 50 Ω. Thus, the resistors are essentially grounded at one end, terminating both the input and output ports. A wide bandwidth is used to minimize losses in the resonators and to eliminate adjustmments. Relative bandwidths of the series and parallel resonators are optimized to provide reasonable match at the band edges.

As shown in Diagram 15, the diplexer contains components not shown in Figure 5-4. Two pairs of 100 Ω resistors (R1014, R1015 and R1011/R1012) are used in parallel to form each 50 Ω termination. This reduces load inductance. A small capacitor is connected across each load (C1010 and C1013) to improve impedance match at frequencies above the pass-band. The inductor in the parallel resonator is a printed length of transmission line that is tapped to establish the correct bandwidth. One end of this inductor is grounded through four capacitors (C1017, C1016, C1019, and C1018) so that dc bias from the 1st Local Oscillator Driver can be introduced to the mixer through the diplexer. Four capacitors are used in parallel to minimize inductance variations and circuit Q degradation. A low-pass filter is included in the bias line to keep noise from the 1st converter.

The diplexer is followed in the signal path by a printed circuit five element low-pass filter that consists of three shunt capacitors and two series inductors. Cutoff frequency of this filter is approximately 1.2 GHz.

829 MHz Amplifier Circuit

The 829 MHz Amplifier provides approximately 18 dB of signal gain at 829 MHz and consists of two nearly identical amplifier stages in cascade (Q1017 and Q1025), plus a 3-dB attenuator. The overall noise figure is approximately 2.8 dB. The gain stages are designed as general purpose, unconditionally stable amplifiers for use in a 50 Ω system. Operation of a stage can be most easily understood if the ac and dc signal paths are described separately. Refer to Figures 5-5 and 5-6 for simplified schematic diagrams of the ac and dc signal paths.

In the ac circuit of Figure 5-5, capacitor C1 and printed circuit inductors L1 and L2 form the input matching network. (In the first stage, inductor L1 is actually the series inductance of dc blocking capacitor C1016.) The collector circuit is matched to 50 Ω by inductor L4 and capacitor C2. Gain is controlled primarily by printed circuit emitter inductor L3. High frequency stability is enhanced by resistors R1 and R2. That is, at frequencies well above 829 MHz, resistor R1 ensures low common base gain and resistor R2 helps to dampen the collector circuit.

In the dc circuit of Figure 5-6, negative feedback through the voltage divider consisting of resistors R3 and R4 sets the collector voltage as a fixed proportion of the −12 volt reference supply. Collector current is determined by resistor R5. Less current is used in the first stage than in the second because the first stage requires less intermodulation distortion performance. Reverse breakdown of the base-emitter junction can degrade the

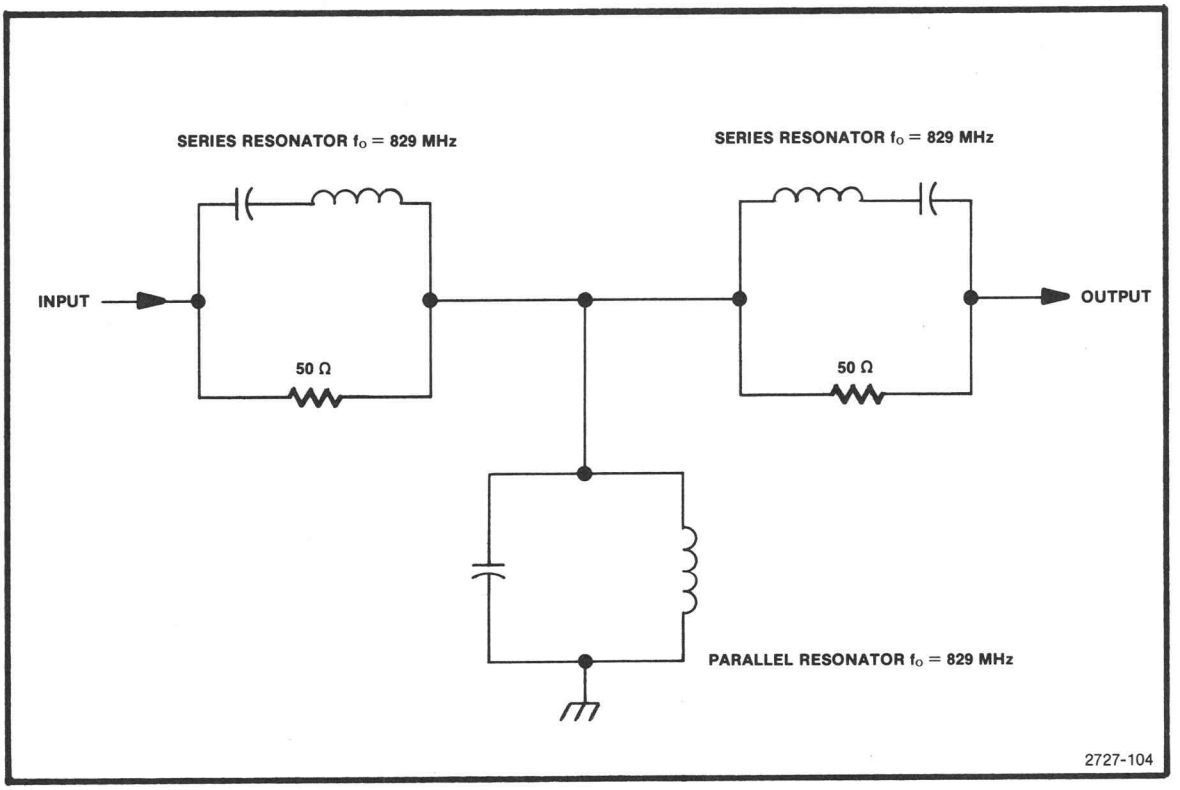

Figure 5-4. Diplexer simplified schematic.

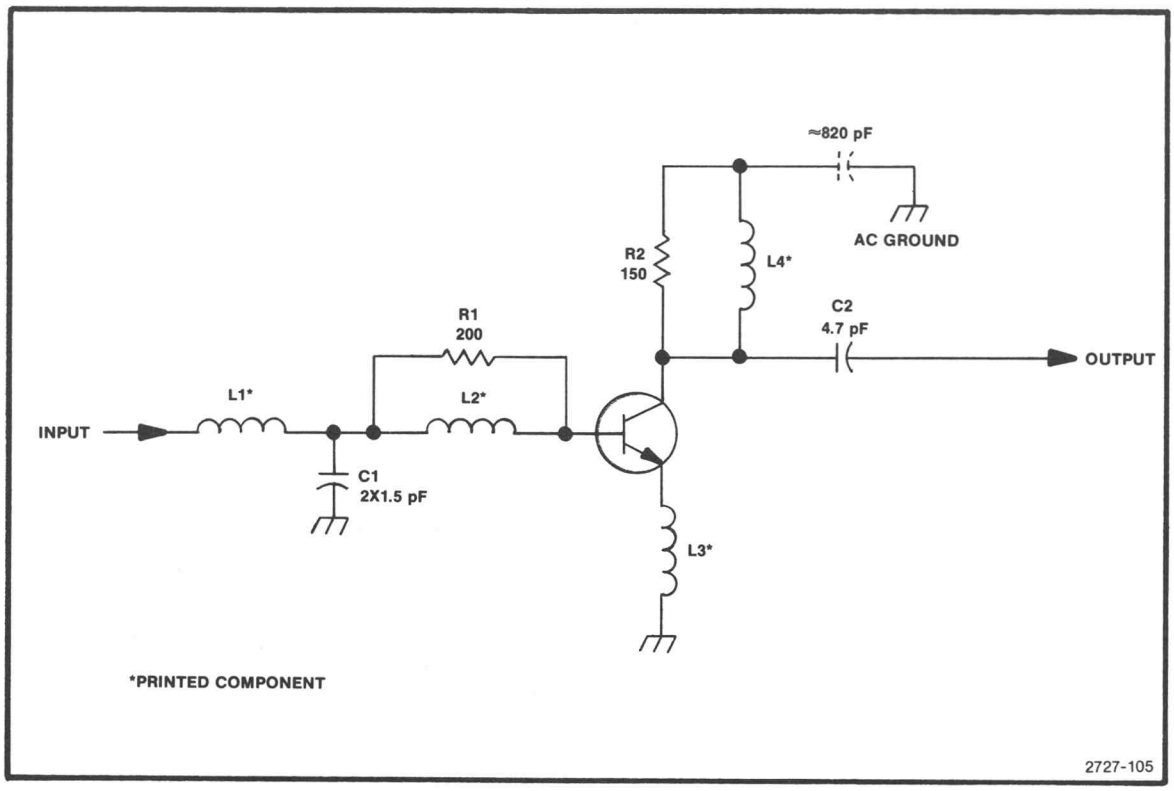

Figure 5-5. Amplifier signal path.

transistor performance, so a diode base clamp is provided in each circuit (CR1013 and CR1022) for protection in the absence of the +12 volt supply.

Not shown in Figures 5-5 and 5-6 are an inductor and a capacitor in the base circuits (L1014 and C1014 for Q1017; L1021 and C1023 for Q1025) and a capacitor in the collector circuits (C1013 for Q1017; C1027 for Q1025). These components perform decoupling functions to isolate the signal path from the bias network.

The 3-dB attenuator assists in maintaining a wideband 50 Ω interface between the second amplifier stage and the 829 MHz bandpass filter. It consists of resistors R1026, R1027, R1025, and R1029. A test point (J1029) at the output of the attenuator is used to verify amplifier performance and to aid in adjustment of the following 829 MHz bandpass filter. From the attenuator, the signal is applied to the 829 MHz 2nd Converter Mixer circuit.

829 MHz Mixer Circuits

Refer to Diagram 15. Frequency conversion from 829 MHz to 110 MHz occurs on the 829 MHz 2nd Converter board. The board contains a coaxial bandpass filter, a 1.3 GHz low-pass filter, a 3-dB attenuator, and a 2-diode, single-balanced mixer with associated frequency diplexing circuitry.

829 MHz 1st IF signals from the 829 MHz Amplifier, enters the converter through an 829 MHz bandpass filter. The filter blocks unwanted inputs, primarily the 609 MHz image signal. A 1.3 GHz printed element lowpass filter blocks high frequency signals that would otherwise be admitted at the re-entrant frequencies of the bandpass in excess of 2 GHz. The function of the 1.3 GHz lowpass filter is shared by the 1.2 GHz lowpass filter located on the 829 MHz Diplexer board. A 3-dB attenuator on the 829 MHz Amplifier board and one following the 1.3 GHz lowpass filter help ensure consistent 50 Ω interfaces for the 829 MHz bandpass filter.

The 829 MHz bandpass filter is composed of four quarter-wave, coaxial-type resonators mounted on the 829 MHz 2nd Converter board. The end resonators are tapped near their grounded end to facilitate the filter's input and output coupling. Inter-resonator coupling is provided by printed "through-the-board" capacitors that connect between the resonators at their high-impedance end. A bendable tab is located at the high-impedance end of each resonator for fine adjustment of resonant frequency. The bendable tab acts as a small, variable capacitance from the end of the resonator to ground, making fine adjustments of resonant frequency possible. When properly tuned, the filter presents an input return loss of at least 12 dB at 829 MHz and an insertion loss of about 2-dB.

829 MHz enters the mixer diodes through a 450 MHz highpass filter. The lowpass filter blocks the lower IF signals generated within the mixer. The mixer diodes are

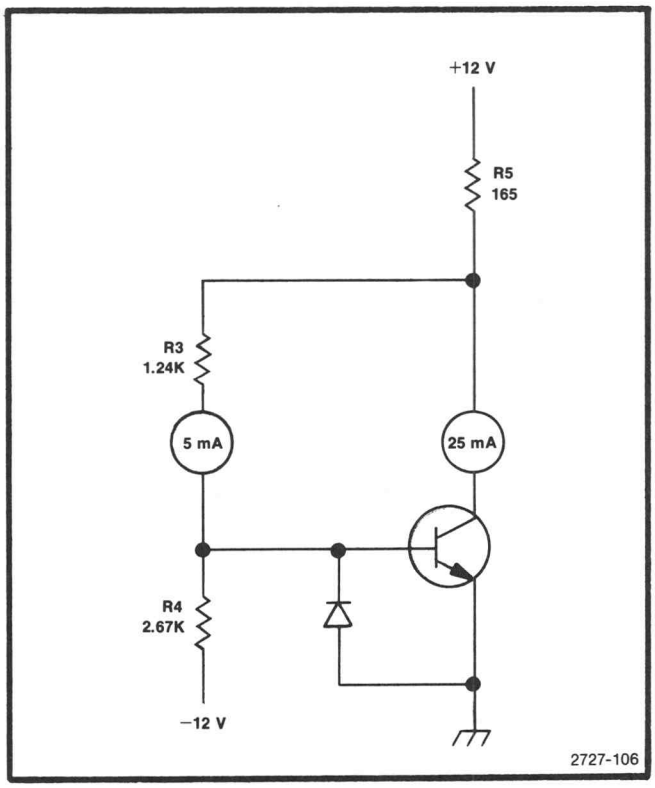

Figure 5-6. Amplifier signal path.

transformer-driven with 719 MHz from the 719 MHz local oscillator. The large amplitude LO signal (+12 dBm) drives the diodes into and out of conduction, effectively switching the smaller 829 MHz signal on and off at a 719 MHz rate. Several mixing products result, the largest of which are the difference frequencies, (110 MHz), and the sum, (1548 MHz). The 110 MHz product is allowed to leave the mixer by way of a 300 MHz lowpass filter that blocks LO, RF, and higher frequency products. The 1548 MHz product leaves the mixer via the 450 MHz lowpass, beyond which it is reflected by the 829 MHz bandpass filter and returned to the mixer in-phase with LO harmonics to increase energy of the 110 MHz signal. A printed delay line between the 829 MHz bandpass and 1.3 GHz lowpass filters control the phase delay. The net result of this "image enhancement" is low conversion loss and good inter-modulation distortion performance. Inclusion of the 3-dB attenuator reduces the image enhancement effect considerably but allows line lengths and filter characteristics to be non-critical. Overall conversion loss from 829 MHz to 110 MHz is about 8.5-dB, including 2-dB from the 829 MHz bandpass filter and 3-dB from the attenuator.

110 MHz IF Select Circuits

The 110 MHz IF Select circuits select the 110 MHz IF signal from either the 829 MHz 2nd Converter or the 2072 MHz 2nd Converter for transmission to the 110 MHz IF Amplifier. The 110 MHz IF signal from the 829 MHz Converter is applied directly to the select switch circuit; the 110 MHz IF signal from the 2072 MHz converter is applied (via coaxial connector P233) through a controlled amplifier to the select switch circuit. The switch circuit diodes are CR2011, CR2012, CR2013, and CR1015.

When the IF SELECT signal input to the 829 MHz 2nd Converter (via feedthrough C236) is low, series diode switch CR2011 turns on, allowing the 110 MHz IF signal, from the 829 MHz 2nd Converter, to be applied to the output port. At the same time, shunt diode switches CR2012, CR2013, and CR1015 turn on. Amplifier Q1011 turns off, thus isolating the output port from spurious 2072 MHz 2nd Converter output signals.

When the IF SELECT signal input is high, amplifier Q1011 is turned on and shunt diode switches CR2012, CR2013, and CR1015 turn off. This allows the 110 MHz IF signal from the 2072 MHz 2nd Converter to be applied to the output port. Series diode switch CR2011 also turns off to prevent signal loss into the inactive 829 MHz 2nd Converter. Isolation for the 829 MHz 2nd Converter is not critical when that converter is inactive, because the 719 MHz local oscillator is also turned off by the IF SELECT signal. This eliminates most spurious outputs. The switch and amplifier logic is summarized in Table 5-3.

As described above, diodes are used as the basic switch elements. When forward biased, with current of several milliamps, the diodes present only a few ohms of series resistance to RF signals. When reverse biased, the diodes present essentially an open circuit. The control signal from switch driver Q2015 is connected in a series path through the four diodes (CR2011, CR2012, CR2013, and CR1015) and inductors L2011, L2013, and L2019 so that Q2015 supplies only a small current to forward bias all four diodes. This same diode bias current is used to turn off amplifier Q1011.

TABLE 5-3
SWITCH AND AMPLIFIER SELECTION SUMMARY

IF Select Line	Series Switch	Shunt Switch	Amplifier	110-MHz IF Source
High	On	On	Off	829 MHz 2nd Conv.
Low	Off	Off	On	2072 MHz 2nd Conv.

Diodes CR2012 and CR20134 are incorporated into a pi-type matching network consisting of inductors L2011 and L2013 and capacitor C2012 so that both switches shunt the signal at moderately high impedance points. In addition, when the switch diodes are turned on, parallel resonance, between inductor L2011 and capacitor C2012, presents virtually an open circuit to signals passed by switch diode CR2011. Switch diode CR2013 is located at the high impedance node created by series resonant inductor L2019 and capacitor C2017. Diode CR1015 directly shunts the output from amplifier Q1011.

Transistor Q1011 operates as a common-emitter amplifier for the 110 MHz IF signal from the 2072 MHz 2nd Converter. Its gain and impedance match are controlled primarily by feedback resistors R1011 and R1012. Resistors R1013 and R1018 attenuate the output by approximately 6-dB for enhanced control of match and stability characteristics. Dc collector current from Q1011 develops a voltage across resistor R1017. Bias control transistor Q1012 then compares this voltage with the fixed voltage of the divider, consisting of resistors R1015 and R1016. Any variation in the Q1011 collector current is thus sensed by Q1012 and cancelled by a resulting change in the Q1011 base current. Collector current in Q1011 is fixed in this manner at approximately 15 milliamps.

When control current is drawn through the switching diodes by driver Q2015, a voltage is developed across resistor R1017 that exceeds the control limits of Q1012, effectively removing the base bias from amplifier Q1011 and turning off that transistor. Negative current supplied through resistor R1014 ensures that Q1011 can be turned off by the loss of positive base drive. Diode CR1011 protects the base of Q1011 from excessive reverse bias. Voltage across R1017 is approximately 3.4 volts when Q1011 is turned on and approximately 4.4 volts when it is turned off. Overall gain for the 110 MHz path is approximately 12.8 dB when the amplifier is turned on.

From the diode switch circuit, the 110 MHz IF signal is transmitted via coaxial connector P232 to the 110 MHz IF Amplifier.

829 MHz, 2nd Converter, LO Section

Refer to the block diagram adjacent to Diagram 14. The 829 MHz 2nd Converter Local Oscillator provides the 719 MHz frequency that is mixed with the 829 MHz IF signal to produce the 110 MHz IF signal that is supplied to the 3rd Converter. (In the following description, the circuits are referred to as the 719 MHz LO.) The 719 MHz LO consists of a phase lock loop, a 719 MHz output circuit, and a 2nd LO front panel output circuit. Refer to Diagram 14 while reading the following description.

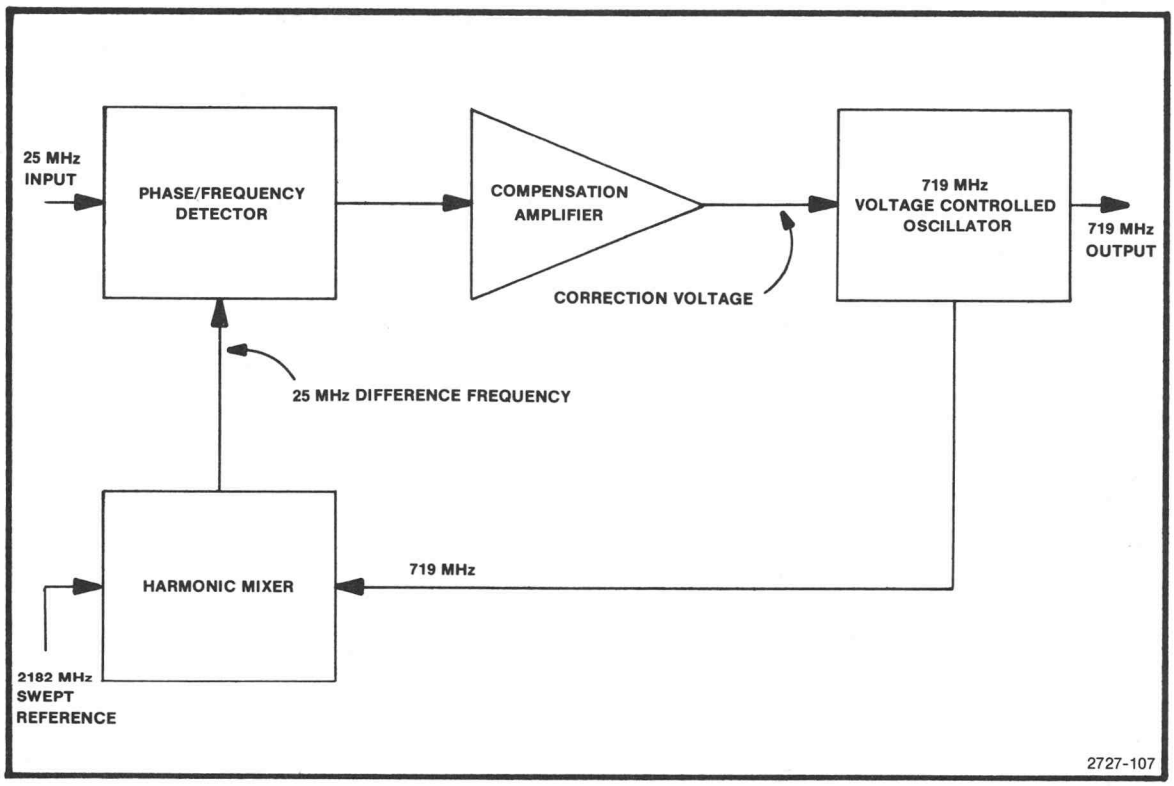

Figure 5-7. Simplified block diagram of the phase lock circuits.

Phase Lock Circuit

The phase lock circuit receives reference frequency inputs and uses phase/frequency detection techniques to use those signals in controlling the output frequency of the 719 MHz oscillator. The circuit consists of a voltage controlled oscillator (VCO), a phase/ frequency detector, a harmonic mixer, and various amplification stages and power splitters. When the 719 MHz LO is enabled, the 2182 MHz Local Oscillator output frequency is used as a swept reference to derive the 719 MHz frequency. The VCO is controlled so that the third harmonic of its output frequency is a constant difference from the 2182 MHz reference. This control is accomplished by the phase-lock loop. Refer to Figure 5-7.

In the phase lock loop, the harmonic mixer generates a frequency that is the difference between the swept 2182 MHz input reference and the third harmonic of the VCO output frequency. Ideally, this difference is 25 MHz. That frequency, in turn, is compared with the 25 MHz that is divided down from the 100 MHz oscillator output supplied from the 3rd Converter. This comparison is done by the phase/frequency detector circuit. Its output is a correction voltage that is applied to the VCO to drive the frequency in the required direction to maintain the nominal output frequency at 719 MHz. This completes the loop that causes the VCO to track the 2182 MHz reference.

Because the third harmonic of 719 MHz oscillator frequency is locked to the 2182 MHz reference, the tuning range of the 719 MHz oscillator is only one third of the swept range of the reference. Since that swept range is 8 MHz, the 719 MHz oscillator range need be only 719 ± 1.33 MHz.

The 719 MHz VCO, Q2014, uses a Colpitts configuration with a printed circuit quarter-wavelength transmission line resonator to achieve high spectral purity and good thermal stability. Correction voltage is applied to varactor diode CR1011 (which is connected at the midpoint of the transmission line resonator) to vary the resonant frequency of the transmission line over a 2.66 MHz range. A tunable transmission line (also printed) adjacent to the printed resonator compensates for variations in component tolerances and resonator dimensions. This adjustable transmission line is cut at factory calibration to the correct length for proper VCO operation. A scale with minor divisions every 2 MHz is printed next to the adjustable line to aid in calibration. The output from the oscillator is extracted near one end of the quarter-wavelength line through two printed inductors and applied to output amplifiers through a power splitter.

Note that the 719 MHz VCO is enabled or disabled under microprocessor control, dependent upon the frequency band being analyzed. When the oscillator is disabled, the 719 MHz signal is no longer available for conversions with 829 MHz RF. This is controlled by the IF SELECT signal from the RF Interface through connector C231. If this signal is low, transistor Q2017 is cut off, which cuts off transistor Q2016. This, in turn, cuts off transistor Q3015 (which is the current source for oscillator transistor Q2014), thus cutting off the 719 MHz oscillator.

From the oscillator, the +6 dBm 719 MHz output signal is applied to isolation amplifier Q1021 through a power divider that consists of resistors R1021, R1022, and R1020. (From the other side of this power divider, the signal is applied to an output amplifier for transmission to the 829 MHz 2nd converter mixer circuit.) A second isolation amplifier (Q3021) identical in configuration, provides the necessary isolation between the 719 MHz oscillator output and undesired harmonic mixer products.

The harmonic mixer produces not only the required 25 MHz difference frequency, but also many other higher order products. Two in particular, those at 744 MHz and 694 MHz, are separated from the 719 MHz oscillator frequency by only 25 MHz. Were it not for the isolation provided by amplifiers Q1021 and Q3021, these two products could be converted in the 829 MHz mixer and would thus appear as real signals on the screen. The isolation amplifiers provide sufficient attenuation in the reverse direction to prevent this occurence.

To provide maximum reverse attenuation in each amplifier circuit, external rf feedback is kept to a minimum. An output matching LC network, consisting of capacitor C1025 and a printed inductor for Q1021, and capacitor C3021 and a printed inductor for Q3021, presents an optimum load impedance to the collector of each transistor to allow maximum power transfer to the attenuator that precedes the harmonic mixer. An input LC matching network consisting of capacitors C1023 and C1022 plus a printed inductor for Q1021, and capacitors C3023 and C3022 plus a printed inductor for Q3021, establishes the 50 Ω input impedance to each transistor.

A 3 dB attenuator consisting of resistors R3021, R3022, R2021, and R3023 at the output of the second isolation amplifier (Q3021) provides a non-reflective source impedance to the mixer. Without the attenuator, mixer conversion loss could vary from unit to unit.

The harmonic mixer, consisting of diodes CR2022 and CR2021, inductor L2014, and a half-wavelength (at 2182 MHz) transmission line, produces the difference frequency between the third harmonic of the 719 MHz oscillator frequency and the 2182 MHz reference frequency (nominally 2157 MHz). Note that the 2182 MHz signal is supplied from the 2182 MHz Cavity Oscillator through coaxial connector P237 and the power divider consisting of resistors R1021, R1023, and R1022 to the half-wavelength transmission line. The VCO input to the mixer switches diodes CR2022 and CR2023 at a 719 MHz rate. The 2182 MHz reference acts as the rf and is applied differentially to the diodes from the transmission line. The resultant 25 MHz intermediate

frequency is diplexed from the mixer through the 100 MHz low-pass filter consisting of capacitor C3014 and inductor L3014. (Diodes CR2022 and CR2021 are mounted in printed circuit board cut-outs to relieve any necessity of bending the diode leads. Lead bending may fracture the diode case.) Inductor L2014 provides a bias return path to allow the diodes to switch at a 719 MHz rate.

From the harmonic mixer, the signal is applied through the above mentioned low-pass filter to cascaded amplifiers U1053 and U1044B. These amplifiers boost the -32 dBm mixer output signal to a level appropriate to drive the phase/frequency detector. Amplifier IC U1053 contains two differential amplifiers in cascade; amplifier IC U1053 contains two differential amplifiers in cascade; amplifier IC U1044 contains only one differential amplifier and acts as a buffer. When the loop is first acquiring lock, such as at power-on, the nominal 25 MHz IF may be as high as 34 MHz. Two stages of amplification are necessary to ensure enough gain for the phase/frequency detector to drive the IF back to 25 MHz; the buffer is necessary to provide ECL levels to the detector.

The second input to the phase/frequency detector is the 100 MHz frequency from the reference oscillator in the 3rd converter via coaxial connector P235. This signal is applied through two amplifier stages, U1022A and U1022B, to a divide-by-four circuit, U1036A and U1036B. These two flip-flops divide the 100 MHz frequency to 25 MHz for application to the phase/frequency detector. (Two stage of amplification are used to isolate the 100 MHz reference bus from signals, generated in the local oscillator section of the 2nd Converter.) This stable 25 MHz reference output is used to lock the difference frequency from the harmonic mixer at 25 MHz.

The phase/frequency detector effectively measures the phase difference between the 25 MHz reference and the IF from the harmonic mixer, and determines the correction voltage that is to be applied to the 719 MHz VCO. This circuit consists of two D-type flip-flops, U2047A and U2047B, and a differential amplifier stage used as a NAND-gate (U1044A). The 25 MHz reference signal from the frequency divider is applied to the clock input of flip-flop U2047A; the nominal 25 MHz signal from the harmonic mixer is applied to the clock input of flip-flop U2047B. The rising edge of the input signal to each flip-flop causes the $\overline{Q}$ outputs back to the low level only after both flip-flops have been clocked.

If the harmonic mixer output frequency is below 25 MHz, (or if its phase lags that of the 25 MHz reference) the $\overline{Q}$ output of flip-flop U2047A will be high longer than that of flip-flop U2047B. If the harmonic mixer output frequency is above 25 MHz (or if its phase leads), the converse will be true. When the two flip-flops are clocked at the same frequency and phase, the two outputs will be high for the same amount of time. From the two flip-flops, the $\overline{Q}$ outputs are applied to compensation amplifier U3053, a differential amplifier that determines which output is high for a longer time.

Compensation amplifier U3053 provides part of the loop gain to ensure that the gain will be high enough to cause the 719 MHz oscillator to track the sweep of the 2182 MHz reference oscillator. In addition, the compensation amplifier limits the loop bandwidth to 100 kHz to make certain that the loop will not oscillate. Note that the differential inputs to the amplifier each include a low-pass RC filter (R3041 and C3042 for the minus input; R2048 and C2055 for the plus input) to attenuate the undesired high frequency clock pulses from the phase/frequency detector.

The nominal swing of the U3053 output is from +12 to -12 volts. Since the compensation amplifier is capable of considerably more output swing than is needed to control the oscillator, a voltage divider is used to limit the output and reduce amplifier related noise. This voltage divider, consisting of resistors R2053, R2054, R3051, and R3052, reduces the possible ±12 volt swing to +5 V to +12 V, as required by varactor diode CR1011. Nominal voltage in a locked condition is +6.75 to +7.5 V

Thus, dependent upon whether the harmonic mixer output frequency is above or below 25 MHz, the correction voltage applied to diode CR1011 is higher or lower than nominal to drive the oscillator frequency in the required direction.

Front Panel 2nd Local Oscillator Output Circuit

The 829 MHz 2nd Converter also provides a sample of each 2nd local oscillator frequency at the analyzer front panel. This output is provided for external accessory equipment such as a tracking generator. Each local oscillator (719 MHz and 2182 MHz) output is obtained through a power divider and applied to a power combiner for application to the 2nd LO OUT connector (P236) on the front panel. The divider for the 719 MHz signal consists of resistors R1021, R1023, and R1022. From these two power dividers, the signals are applied through filters to the combiner, which consists of resistors R2025, R2024, and R2026, then to the front panel connector.

Two additional filters are required to attenuate undesired signals and prevent those signals from reaching the 829 MHz mixer. A 2.2 GHz bandpass filter, consisting of two adjacent quarter wavelength printed circuit transmission lines, is used in the 2182 MHz line to attenuate undesired mixer products. The second filter, a 1 GHz low-pass circuit, attenuates the 2182 MHz signal and

prevents it from reaching the 829 MHz mixer. This filter consists of capacitors C1021, C1022, C1023, C3023, C3024, and C3025 and the three associated printed inductors.

Both 2nd local oscillator signals, 2182 MHz and 719 MHz, are present at the front panel when the 829 MHz 2nd converter is selected.

719 MHz Output Circuit

The 719 MHz 2nd Local Oscillator generates the signal that is applied to the 829 MHz mixer to derive the 110 MHz IF signal. As described in the phaselock circuit, the 719 MHz VCO output is coupled through divider resistors R1020, R1022, R1021, R2021, R2023, and R2024 to the first isolation amplifier. The second output from this power divider is applied to amplifier Q2021 to provide gain for a 12 dBm output level to drive the 829 MHz mixer. The output of the amplifier includes a 3-dB attenuator (consisting of resistors R2027, R2028, and R2029), to ensure a 50 Ω non-reflective source impedance. An rf test point, J2026, is provided at the amplifier output. The level at the test point is typically −6 dBm.

4

110-MHz IF AMPLIFIER AND 3RD CONVERTER

The 110 MHz IF Amplifier and 3rd Converter accept the 110 MHz output from the 2nd Converters, amplify and convert the signal to 10 MHz IF signal which is applied to the resolution circuits in the IF Section. The 110 MHz signal is amplified in a three stage gain block and applied to a three-section bandpass filter. This filter uses helical resonators and has a nominal bandwidth of 1 MHz. From the bandpass filter, the signal is applied to a mixer and heterodyned with a 100 MHz local oscillator signal to produce a 10 MHz third IF signal. The resulting signal, nominally at a level of −35 dBm at the top of the screen, then drives the Variable Resolution circuits.

Initial gain for the analyzer is provided by the 110 MHz IF Amplifier. This gain compensates for signal level losses in the three mixers. Three stages of amplification are used, plus a pin diode controlled attenuator that allows for adjustment of the gain. Typical gain for the amplifier is 21 dB. From the amplifier, the 110 MHz signal is applied to the 3rd Converter through a bandpass filter.

The filter is a three section unit using helical resonators. Its bandwidth of 1 MHz defines the broadest resolution bandwidth of the analyzer, provides good image rejection, and limits noise in the frequency spectrum in which desirable signals appear.

Consisting of a mixer, an oscillator, and various output amplifiers, the 3rd Converter converts the 110 MHz second IF signal into the 10 MHz third IF signal. The local oscillator is crystal controlled circuit that generates a precise 100 MHz signal. This 100 MHz is applied to the mixer and to output amplifiers. The 100 MHz signal is used in the 2nd Converter and the Phase Lock section. It is also furnished to a front panel CAL OUT connector for external use.

The mixer is a diode ring type that is fed from balanced drivers which are driven by the 100 MHz oscillator. From the mixer, the output signal, at 10 MHz, is applied to the Variable Resolution section of the 3rd Converter.

110 MHZ IF AMPLIFIER 16

The 110 MHz IF Amplifier consists of three stages of amplification and an attenuator. Since the first two mixers in the RF system offer no high frequency gain, it is important that this amplifier exhibit low noise characteristics. Also, it must be relatively free of third-order intermodulation distortion.

Signal input to the amplifier is from the 2nd Converter through coaxial connector P321. This signal is nominally 110 MHz and is applied to an impedance matching bandpass filter consisting of inductor L2044 and capacitor C325. The signal is injected into the parallel tuned circuit through a tap in the inductor and taken out at the high impedance side through another variable capacitor, C2047. Inductive input provides for converting to high impedance within the tuned circuit; the extra capacitor on the output provides for converting back to 50 Ω nominal. The primary tuning capacitor (C325) adjusts the resonant point; the output capacitor (C2047) is adjusted in combination with C325 for good impedance match at 110 MHz. This is done using a return loss bridge. The nominal return loss is 35 dB. The Q of the input filter is approximately 20.

From the input filter, the signal is applied to Q4053, the first stage of amplification. This is a broadband feedback amplifier to provide good input and output impedance and controlled gain. All feedback is through reactive components (transformer T3054) not resistive components. Thus, the impedance and gain can be controlled without significant noise problems.

The second amplifier stage, Q4037, is essentially the same as the first, with only minor bias differences. Gain through each of these stages is approximately 9 dB. The output is applied through a 3-dB attenuator, to preserve the impedance figure, to the bridged T adjustable attenuator. The 3-dB attenuator consists of resistors R2039, R2038, and R2043.

From the 3-dB attenuator, the signal is capacitively coupled through C2037 to the adjustable attenuator. This attenuator uses two PIN diodes (CR3030 and CR1029) in the mode in which the resistance to RF signal flow is controlled by the current through the diodes. Refer to Figure 5-8 as an aid in understanding the following description.

With reference to Figure 5-8, if resistor R1 were set to infinite resistance and resistor R2 were set to zero resistance, the RF signal path would be through R2 to ground, thereby producing infinite signal attenuation. If resistor R1 were set to zero resistance and resistor R2 were set to infinite resistance, the RF signal path would be through R1 to the load, thereby producing almost no attenuation. This, basically is how the adjustable attenuator operates, except that resistors R1 and R2 are actually PIN diodes and the RF path resistance through these diodes is controlled by the current through the diodes in an inverse proportion (higher current results in less resistance to RF).

With reference to Diagram 16, resistor R3035 and R2030 establish a constant current of approximately 2 mA from the −15 volt supply to the diodes. This current is divided according to the bias on the diodes. The bias, in turn, is established by gain adjustment R1015, from the +15 volt supply. If R1015 is set low (near ground), diode CR3030 is reverse biased and the 2 mA flows through diode CR1029. This routes the RF signal through resistors R2032 and R3029 and capacitor C2029, with the impedance characteristics of CR1029 added for maximum attenuation.

If R1015 is set higher (nearer +15 volts), diode CR3030 is forward biased and starts to conduct. Since the 2 mA supply current is relatively constant, this subtracts from the current through CR1029. Thus, the impedance of the diodes is relatively constant, resulting in a good impedance match over a broad range. Dependent upon the exact amount of current through CR3030, part of the RF signal path is through that diode to the output amplifier and part is through R2032 and diode CR1029 to ground. This results in reduced signal attenuation.

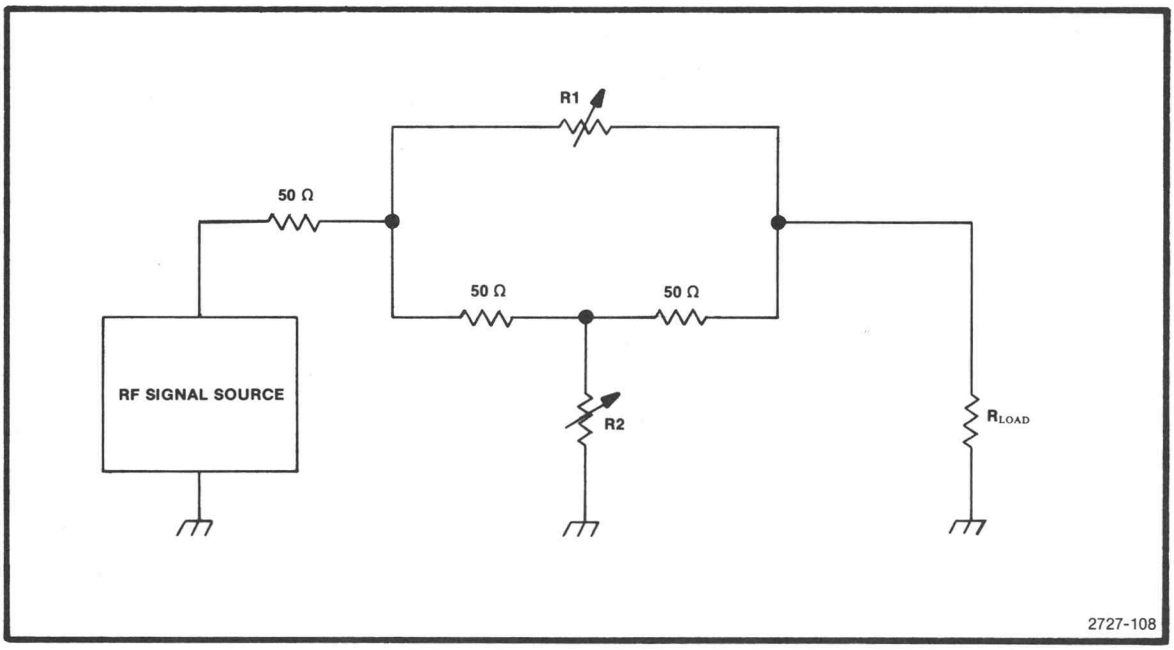

Figure 5-8. Bridged T attenuator equivalent schematic.

If R1015 is set to the positive limit, the entire 2 mA flows through CR3030. This routes the RF signal through CR3030 (which exhibits little resistance with high current) to the output amplifier with almost no attenuation. (The insertion loss is approximately 1 dB.)

From the adjustable attenuator, the signal is applied to the final amplifier Q3018. This stage is a broadband feedback amplifier that supplies relatively substantial output current and exhibits good intermodulation distortion performance. This is provided primarily through the large current capacity, by negative feedback through resistor R3014, and emitter degeneration through resistor R4029. These resistors are sized to provide a reasonably good impedance match at 110 MHz. Nominal gain of the stage is 13 dB.

With Gain potentiometer R1015 set for maximum gain (least attenuation) the gain of the 110 MHz IF Amplifier is approximately 26 to 27 dB. The Gain potentiometer is normally adjusted for total gain of 21 dB.

The output signal from the 110 MHz IF Amplifier is applied to the 110 MHz Bandpass Filter.

110 MHz BANDPASS FILTER 11 16 18

The 1 MHz Bandpass Filter is a three-section filter using helical resonators, the major function of which is to determine the widest resolution of the analyzer. Another filter function is to provide image rejection (that is, to prevent the mixer from producing 10 MHz outputs from input signal of 90 MHz). Still another function is to limit the noise spectrum appearing at the 10-MHz IF circuits to those frequencies at which signals also appear.

Though the filter is a sealed unit, in the interest of system understanding, the following brief description is provided.

The filter consists of three small helical resonators enclosed in cans and tuned with multi-turn trimmer capacitors. For purposes of impedance matching, the filter is symmetrical. The end resonators are connected to external circuits by 10 picofarad capacitors attached to taps on the coils. Coupling between resonators is accomplished through holes in the resonator cans.

Adjustment of the filter for minimum attenuation is performed at calibration by setting the three trimmer capacitors. Insertion loss is on the order of 4 to 4.5 dB.

From the filter, the 110 MHz signal is applied to the 3rd Converter.

4

3RD CONVERTER

Refer to Diagram 4 and to diagram adjacent to Diagram 17. The 3rd Converter converts the 110 MHz IF signal to 10 MHz for application to the Variable Resolution circuits. It also provides the 100 MHz signal used in the 3rd Converter, the front panel CAL OUT signal, and the 110 MHz reference for most of the phase-lock loops in the analyzer. The circuits consist of an oscillator and driver, four identical reference output amplifiers, a mixer, and a calibrator output amplifier.

Refer to Diagram 17 while reading this description.

Oscillator/Driver Circuit

The oscillator Q3041 is of the Colpitts configuration with a 100 MHz microwave type crystal operating in the series resonant mode in the feedback loop. That the crystal is a microwave type indicates that it is not only a high-Q type, but that it is mounted at three points to alleviate mechanical vibration problems. (The components inside the dashed line immediately below crystal Y3036 in Diagram 17 are included for future use only and are not described herein.) Tuning capacitor C3031 in the collector circuit serves to adjust for maximum output.

From the oscillator collector circuit, the output is RC coupled to driver stage Q2036. The driver is a feedback amplifier that provides output power on the order of +10 dBm to drive all of the reference amplifiers plus the mixer amplifier. The output is transformer coupled from the the collector circuit.

Reference Amplifier Circuits

The reference output circuits consist of four identical low-gain common emitter amplifiers with relatively high levels of emitter degeneration. These are transistors Q4018, Q2015, Q3015, and Q2016 and associated components. The primary purpose of these amplifiers is to provide isolation among the reference outputs and isolation of those outputs from the oscillator and mixer circuits. The output of each is approximately 0 dBm.

From amplifier Q4018, the output is applied to the 829 MHz IF circuits through coaxial connector J2013. From amplifier Q2015, the output is applied to coaxial connector J2012 and is reserved for future use. From amplifier Q3015, the output is applied to the Phaselock Synthesizer circuits through coaxial connector J1023. From amplifier Q2016, the output is applied to coaxial connector J4027 and is reserved for future use. The Q2016 output is also coupled to the Calibrator Output Amplifier.

Mixer Circuit.

The mixer circuit beats the 100 MHz oscillator frequency with the 110 MHz IF signal from the 110 MHz Bandpass Filter to produce the 10 MHz IF output signal. From transformer T2026 of the driver circuit (Q2036), the 100 MHz signal is applied to transformer T2041, which converts the single-ended driver output to a balanced signal to drive the push-pull amplifier that drives the mixer. This amplifier consists of transistors Q1048 and Q2046 and provides a balanced signal, coupled through transformer T3053 to diode ring mixer CR2054. The signal level of the 100 MHz, applied to the mixer, is approximately 100 milliwatts to provide adequate intermodulation distortion performance. The 110 MHz IF, through Bandpass Filter (FL36), is applied through coaxial connector J2058, the impedance matching LC circuit that consists of inductor L1055 and capacitor C1056, and transformer T1053, to the mixer.

The 10 MHz output from the center tap of T1053 is applied through a diplexer and coaxial connector J3057 to the Variable Resolution circuits. Loss through the mixer is typically 9 dB. The input level from the 110 MHz bandpass filter is nominally -26 dBm and the output to the Variable Resolution circuits is nominally -35 dBm.

Calibration Output Amplifier

The calibrator output amplifier is a differential amplifier (Q2031 and Q1031) that is overdriven. With low levels of drive, this amplifier would operate as a small-signal amplifier. However, with the higher positive and negative levels from reference amplifier Q2016, the transistors are either driven hard or are not conducting at all. Since the transistors are overdriven, the current in the output side (Q1031) is the dc bias current when that side is conducting. Changing the bias current will therefore change the output voltage. Thus, the output is determined by internal dc levels, not input signal levels. Potentiometer R1045 provides for adjustment of that quiescent current.

The output frequency is stable and rich in harmonics. Thus, it provides a useful signal comb of 100 MHz markers to approximately 2 GHz. At 100 MHz, the output level is set by R1045 for -20 dBm which is applied to the front panel CAL OUT connector through coaxial connector J1015.

5

IF SECTION

The IF section receives the 10 MHz IF signal from the 3rd Converter, establishes the system resolution through selective filtering, levels the gain for all bands, and logarithmically amplifies and detects the signal to produce the video output to the Display Section.

System resolution is selectable, under microcomputer control, among five bandwidths: 1 MHz, 100 kHz, 10 kHz, 1 kHz, and 100 Hz. (Some 30 Hz circuits are included for future use.) This selection is done in the Variable Resolution circuit block by two sets of filters. Bandpass filters are also included at the circuits input and output.

Significant gain is provided in the resolution circuit block in several stages of amplification. Also, the capability to add other gain steps under microcomputer control is provided by switching attenuators in or out of the signal path. These attenuators, by being switched in combination, provide for 10, 20, 30, or 40 dB of additional gain.

Leveling to compensate for instrument front-end losses is also included in the resolution circuit block. Front-end losses occur primarily in the higher frequency bands; therefore, most band leveling amplification is required in those bands.

In order that each division of signal change on the crt screen be equal to that for each other division and be equivalent to a similar signal level change in dB, a logarithmic amplification of the signal is required. This is done by a seven stage amplifier that produces an output that is proportional to the logarithm of the input. Thus, the screen displacement can be selectable as to amount of change per division, and can be proportional to the input level change. For instance, in the 10 dB per division mode, each division of displacement in the screen represents a signal level change of 10 dB regardless of whether it is at the top or bottom of the screen.

Following the logarithmic amplifier, an area detector produces a positive-going pulse output that is applied to the display section as the VIDEO signal.

VARIABLE RESOLUTION SECTION

18 19 20

The Variable Resolution (VR) circuits provide selection of resolution bandwidth under microcomputer control, and approximately 35-dB of system gain. It consists of two sets of filters and various gain leveling stages. Since the input to the VR circuits is nominally at -35 dBm and the Log Amplifier input must be 0 dBm for full screen, the VR circuits must provide the gain difference. Also, additional gain (up to 40dB) is required for operation in the 2dB/DIV or the linear mode plus compensation for variations in front end losses.

Physically, the VR section consists of two subassemblies that plug onto the analyzer mother board. The input circuits are in one sub-assembly; the output section and digital interface are in the other. Each of the subassemblies consists of boards that plug onto a four layer mother board with a ground plane on both outside layers. Only power supply and control voltages travel through the mother board. All signal interconnection is via coaxial cable.

Circuits for the VR section are contained on three diagrams: 18, 19, and 20. The following paragraphs describe the circuits.

Input Circuit

The VR Input circuit receives the −35 dBm 10 MHz signal from the 3rd Mixer through J693. This signal is applied to a two-pole, 1.2 MHz bandpass filter that augments the 1 MHz filter that precedes the 3rd Mixer and provides initial selectivity. This 1.2 MHz filter includes C1037 and C1031 and all of the components between. Filter tuning is provided by variable capacitors C1033 and C1026.

From the filter, the signal is applied to broadband feedback amplifier Q1023, which is biased at a relatively substantial output current (approximately 50 mA) to exhibit good intermodulation distortion performance. This performance is provided primarily through the large current capacity, by negative feedback through resistor R1025 and by emitter degeneration resistor R1023.

At the output of amplifier Q1023 is a 6-dB attenuator that provides a clean 50 Ω output to the 1st Filter Select circuits and reflects a 50 Ω termination back through the amplifier for proper termination of the 1.2 MHz bandpass filter. The output signal is transmitted via jumper B.

1st Filter Select Circuits

The VR 1st Filter Select circuits operate in conjunction with the 2nd Filter Select circuits to determine the overall system bandwidth through banks of switched filters that are selectable under control of the analyzer microcomputer. Data bits 0, 1, and 2 from the data bus are applied to decimal decoder IC U4035, which enables the selected filter by providing a low signal on the appropriate output pin. Bandwidth selections are 1 MHz to 100 Hz in decade steps. (Note that 100 Hz resolution is part of Option 3.) The data bits select a filter bandwidth according to the following table.

TABLE 5-4
BANDWIDTH SELECTION

DB0	DB1	DB2	BANDWIDTH
1	0	0	1 MHz
0	1	0	100 kHz
1	1	0	10 kHz
1	0	0	1 kHz
1	0	1	100 Hz
0	1	1	30 Hz (for future use)

Selection of filters is done by PIN diode switching. At the input and output of each filter is a series and a shunt diode. When a filter is selected, the series diodes are biased on and the shunt diodes are biased off. For the filters that are not selected (only one is on at a time), the diode conditions are opposite. Since the switching operation is the same for all filters, the following description of the 100 kHz filter selection is applicable to all with appropriate component designators.

If we assume a content of 010 for the three data bits, line 2 from U4035 will be low. This will turn on transistors Q3019 and Q3055, which operate as dc switches. With input switch Q3019 turned on, the current path is through R4012, L3012, CR3010, L3013, R3014, and Q3019. This current is determined by decoupling resistor R3014 and resistor R4012, which is common to all filters, and is sufficient to turn on CR3010 hard enough that it appears to be merely a resistor to RF. At the same time, the voltage drop across R4012 is sufficient to reverse-bias CR3012. The same operational situation exists for the filter output switch, Q3055. Resistors R3057 and R1067 establish the current to forward-bias CR3061 and reverse-bias CR3060.

Thus, the signal from the Input circuit via jumper B is applied through the selected filter and transmitted to the 10-dB Gain Steps circuit via jumper K. Nominal loss through the filter circuit is approximately 8 dB, with slight variations among the filters. The output level is nominally −28 dBm.

In the non-selected filter sections, the input and output switch transistors are turned off by the high outputs from decimal decoder U4035. The collectors are pulled toward −15 volts by pulldown resistors, thus forward biasing the shunt diodes (input: CR3014, CR2013, CR2011, CR1013, and CR1011; output: CR3062, CR2066, CR2055, CR1055, and CR4065). Since one filter is always selected, the voltage drop across the common input and output resistors (R4012 and R1067, respectively) provides for back biasing the series diodes (input: CR3011, CR3012, CR2010, CR1012, and

CR1010; output: CR4068, CR2062 CR2059, CR1059, and CR4064). Note that input and output switching is provided on the board for future use with 30 Hz resolution.

Design of the filter for each bandwidth is determined by the requirements of each band and ranges in complexity from no filter at all to a complex two crystal arrangement.

In the 1 MHz section no filter is used, because this circuit section is preceded by two filters that accomplish the required function. The first is the 1 MHz filter between the 2nd and 3rd Converters; the second is the 1.2 MHz filter in the VR Input circuit. Instead of a filter, a 6-dB attenuator is contained in the 1 MHz selection circuit. This attenuator provides initial leveling to compensate for less loss because no filter is used.

The 100 kHz filter is a double-tuned LC circuit that is designed for a good time-domain response shape. Variable capacitors C3023 and C3035 provide for input and output adjustments. Impedance matching is accomplished at both input and output by series capacitors C3020 (input) and C3048 (output).

The 10 kHz filter uses a pair of two-pole monolithic crystal filters interconnected by variable shunt capacitor C2037. Input and output impedance is matched to 50 Ω by LC matching networks. Input and output adjustments are also provided by variable capacitors C2036 and C3051, respectively. A 3-dB attenuator is included at the filter input and consists of resistors R2027, R2026, and R2028.

The 1 kHz filter uses a single two-pole monolithic crystal filter with impedance matching LC networks at the input and output. As with the 10 kHz filter, input and output adjustments are provided by variable capacitors (C2040 and C2046, respectively). Also, a 2-dB attenuator is included at the filter input and consists of resistors R2024, R2023, and R2025.

The 100 Hz filter uses a pair of high Q crystals in a balanced two pole ladder configuration. These crystals are matched for both frequency and temperature characteristics. Input and output impedance matching is accomplished primarily by transformers T1025 and T1039. Two small capacitors in the same transformer circuit as the crystals (C1030 and C1035) are adjustable to cancel the parallel capacitance effect of the crystals. Also, a 2 dB attenuator is included at the filter input and consists of resistors R1026, R1028, and R1027.

10 dB Gain Steps Circuit

The VR 10 dB Gain Step circuit provides either 20 dB or 30 dB of signal gain, as selected by the analyzer microcomputer, and allows for minor adjustment of gain from the front panel. The circuits consist of several stages of gain, one of which is adjustable, and a switchable attenuator.

From the 1st Filter Select circuits, the signal is applied through jumper K to the base of transistor Q2021, which operates with Q2015 as a differential amplifier with a transformer (T1023) in the collector circuits. The output is taken from the transformer in an operation that is similar to an operational amplifier, except that this amplifier is an RF circuit. Feedback is also taken from the transformer and applied to the base of Q2015. Because of the feedback, output impedance would be low, so resistor R1024 is included to raise the impedance back to a nominal 50 Ω. This stage provides initial gain of approximately 12 dB.

Following the differential pair is a switchable 10 dB attenuator that consists of resistors R2031, R3035, and R2041 and transistor Q2042. Potentiometer R3035 allows for attenuation calibration. From the junction of resistors R3035 and R2041, the signal is applied to common base amplifier Q3049. Resistor R3051 establishes the amplifier input impedance at a nominal 50 Ω.

If an additional 10 dB of gain is required, the attenuator is switched out of the circuit by turning off transistor Q2042. This is accomplished by driving the -10 dB LINE A control signal at edge connector pin N low. (This signal is from the data bus latch on VR Mother board #2 and is controlled by data bit 0.) When current through Q2042 is stopped, the bias on PIN diode CR2039 is changed from reverse to forward and current flows between the +5 volt supply and the +15 volt supply through resistors R1036, R2043, and R2044; inductor L1035; and diode CR2039. The current through CR2039 is sufficient to make the diode appear as merely a resistor to RF and signal flow is thus routed through CR2039, around R2031 and R1035, effectively removing the 10 dB attenuator and increasing the gain by that amount.

Common-base amplifier Q3049 supplies approximately 12 dB of gain. Its output is transformer coupled to another differential amplifier pair of transistors, Q3061 and Q2061. This differential amplifier operates in a manner similar to that of the input stage, but supplies substantially more current, includes emitter degeneration and allows for adjustment of gain.

Substantial current capacity is required because the VR circuit is sometimes operated with a +10 dBm output instead of a 0 dBm output. This is done in the low noise or "overdrive mode". In that mode, 10 dB of gain is removed from the Log Amplifier to reduce the noise level and must be supplied in the VR section. This is done by switching out 10 dB of attenuation as described previously.

Gain adjustment is accomplished by varying the current through a PIN diode in the feedback circuit. This diode, however, is different from those used in the circuits described previously. Whereas those diodes functioned as switches, this diode, CR1059, functions as a current-controlled rf resistor. Increasing the current flow through the diode causes less resistance to rf signals. Since it is in the feedback circuit, varying the current through the diode thus changes the gain of the stage. This change in current is controlled by the front panel AMP CAL (amplitude calibration) control through edge connector pin T.

Nominal gain of the final stage is 11 dB with the AMP CAL control set at the midpoint. The output is taken from transformer T2055 in the collector circuits and applied to the VR 20 dB Gain Steps circuit through connector P. Output impedance is established at a nominal 50 Ω, primarily by resistor R1062. The output level is at approximately -3 dBm, again with the front panel AMP CAL control set at the midpoint and with the attenuator in the circuit. Refer to Diagram 19 while reading the following description.

20 dB Gain Steps Circuit. 19

The VR 20 dB Gain Steps circuit provides for approximately 17 dB of signal gain or attenuation in several stages, as selected by the analyzer microcomputer. The circuit consists of two attenuators separated by a gain stage.

From the 10 dB Gain Steps circuit, the signal is applied through jumper P to the 20 dB attenuator. This attenuator consists of resistors R2016, R2023, and R1028 and transistor Q1025. Potentiometer R2023 allows for attenuation calibration. From the junction of resistors R2023 and R1028, the signal is applied to common base amplifier Q1043. Resistor R1042 establishes the amplifier input impedance at a nominal 50 Ω.

If an additional 20 dB of gain is required, the attenuator is switched out of the circuit by turning off transistor Q1025. This is accomplished by driving the Q1025 base input low. This control signal is applied through edge connector pin V from the data bus latch on VR Mother Board #2 and is controlled by data bit 2. When current through Q1025 is stopped, the bias on PIN diode CR1022 is changed from reverse to forward and current flows through resistors R1014, R1030, and R1040; inductor L1021; and diode CR1022. The current through CR1022 is sufficient to make the diode appear as a low-value resistor to RF and signal flow is thus routed through CR1022, by-passing R2016 and R2023, effectively removing the 20 dB attenuator and increasing the gain by that amount.

Common base amplifier Q1043 supplies approximately 12 dB of gain. Its output is transformer coupled to the second attenuator. This second attenuator is also switchable and consists of resistors R2055, R2060, R2061 and transistor Q2060. Potentiometer R2060 allows for attenuator calibration. From the junction of resistors R2060 and R2061, the signal is applied out to the VR Band Leveling circuit through coaxial connector J694. The output level is at approximately -21 dBm with both attenuators in the circuit.

If an additional 10 dB of gain is required, the attenuator is switched out of the circuit by turning off transistor Q2060. This is accomplished by driving the Q2060 base input low. This control signal is applied through edge connector pin Y from the data bus latch on VR Mother board #2 and is controlled by data bit 1. When current through Q2060 is stopped, the operation of PIN diode CR2040 is the same as that of 20 dB switch diode CR1022 as described two paragraphs previously.

Combined in the two gain step circuits is a total of 40 dB of attenuation that may be switched in or out in 10 dB steps under control of the analyzer microprocessor. Table 5-5 lists the various combinations of data bits 0, 1, and 2 that select the attenuators for each required gain addition and also lists the attenuator combinations that are switched in or out of the signal path.

Band Leveling Circuit 19

The VR Band Leveling circuit provides additional gain as required for consistent levels on all bands. This additional gain is required primarily at higher frequencies, particularly those bands that use multipled harmonics, to compensate for higher front end losses. It is important to note at this point that the signal level figures used in previous descriptions pertain to Band 1. Levels at those stages are lower for higher frequencies, but the lower levels are compensated for by the Band Leveling circuit. More than 30 dB of signal gain change is available in this circuit.

TABLE 5-5
GAIN STEP COMBINATIONS

Required Gain Addition	10 dB Gain Step Ckt		20 dB Gain Step Ckt	
	Data Line =1	10 dB Atten	20 dB Atten	10 dB Atten
10 dB	0	out	in	in
20 dB	2	in	out	in
30 dB	0,2	out	out	in
40 dB	0,1,2	out	out	out

It is also important in understanding the circuit functions to note that this point in the signal path is especially appropriate for this compensation because some selectivity has already been achieved and thus the amplifiers are not subject to severe intermodulation distortion. But, at the same time, this point precedes the final selectivity, so the added gain does not cause significant noise problems.

From the 20-dB Gain Steps circuit, the signal is applied through coaxial connectors P694, P683, and J683 to the base of transistor Q2016, which operates with Q2019 as a differential amplifier with a transformer (T1015) in the collector circuits. The output is taken from the transformer in an operation that is similar to an operational amplifier, except that this amplifier is an RF circuit. Gain adjustment is performed under control of the microcomputer and is accomplished by varying the current through PIN diode CR2025 in the feedback circuit to the base of Q2019. This diode functions as a current-controlled RF resistor as described previously in the 10-dB Gain Step circuit. Increasing the current flow through the diode causes less resistance to RF signals. Since it is in the feedback circuit, varying the current through the diode thus changes the stage gain. This current change is accomplished under control of a signal from the Digital Control circuits on VR Mother board #2 through edge connector pin BB. This signal is, in turn, controlled by data bits 3, 4, 5, and 6. The gain change through this stage is approximately 15-dB on Band 1, and ranges to 30-dB on Band 5.

Following the input differential amplifier is a second differential amplifier that operates in a similar manner except that it uses power transistors to produce the required current output and the gain is controlled in a different manner. Gain control transistor Q2049 operates as a switch to increase the gain by a fixed amount on Bands 4 through 10. This increase is under control of a signal from the Digital Control circuits on VR Mother board #2 through edge connector pin DD. This signal is, in turn, controlled by data bits 3, 4, 5, and 6. The gain constant through this stage is at approximately 6-dB for Bands 1, 2, and 3 and approximately 18-dB for bands 4 through 10. The output from the transformer is applied through connector EE to the VR 2nd Filter Select circuits. Output impedance is established at a nominal 50 Ω by resistor R1043. The output level is approximately -8 dBm for all bands. Refer to Diagram 20 while reading the following description.

2nd Filter Select Circuits 20

The VR 2nd Filter Select circuits operate in conjunction with the 1st Filter Select circuits to determine the overall system bandwidth through banks of switched filters that are selectable under control of the analyzer microcomputer. Data bits 0, 1, and 2 from the data bus are applied to decimal decoder U3070, which enables the selected filter by providing a low signal on the appropriate output pin. Bandwidth selections are 1 MHz to 100 Hz in decade steps.

Note that 100 Hz resolution is part of Option 3. Also note that, although the 2nd Filter Select circuits are similar to the 1st Filter Select circuits, no 30 Hz switching circuits are included on the board for future use. When 30 Hz resolution is incorporated, the 30-Hz bandwidth will use the 100 Hz filter in the 2nd Filter Select circuits. This can be seen in the connection between pins 6 and 7 on decimal decoder U3070, thus resulting in line 11 being low for both 100 Hz and 30 Hz bandwidth sections.

The data bits select a filter bandwidth as described in Table 5-6 Filter selection is accomplished as described for the 1st Filter Select circuits.

Thus, the signal from the Band Leveling circuit via jumper EE is applied through the selected filter and transmitted to the Post VR Amplifier circuit via jumper JJ. Nominal loss through the filter circuit is approximately 8 dB, with internal adjustment compensation for slight variations among the filters. The output level is nominally -16 dBm.

Switching in the other, non-selected filter sections, is accomplished as described in the 1st Filter Select circuits paragraphs. Also as described in those paragraphs, the design of the filter for each bandwidth is determined by the requirements for each band and ranges from no filter at all to a complex two crystal arrangement. An important design difference is that the 2nd filter circuits contain a variable resistor in the attenuator that follows the input switch in all except the 100 kHz circuit. The purpose of this adjustment is to allow calibration of all other circuits to match the 100 kHz circuit. The Band Leveling circuit furnishes compensation gain to obtain equal signal levels for all bands. Thus, the calibration is required only to remove variations between filter circuits. These resistors are: R1065, R3035, R3025, and R3015.

It is in the 1 MHz section that no filter is used. This is because this circuit section is preceded by the 1 MHz filter between the 2nd and 3rd Converters and the 1.2 MHz filter in the VR Input circuit. Those filters accomplish the required function. Thus, instead of a filter, an attenuator that includes the calibration adjustment is contained in the 1 MHz selection circuit. This attenuator compensates (offsets) the gain loss associated with a filter in the other resolution circuits.

The 100 kHz filter is a double-tuned LC circuit that is designed for a good time-domain response shape. Variable capacitors C2050 and C5055 provide for input and output adjustments. A 6-dB attenuator (resistors R2048, R2047, and R2049) is included at the filter input. This attenuator and the filter form a reference to which the levels of the other circuits are calibrated. Impedance matching is accomplished at both input and output by series capacitors C1047 and C6052.

The 10 kHz filter uses a two-pole monolithic crystal filter. The impedances at the input and output are matched to 50 Ω by LC matching networks. Input and output adjustments are also provided by variable capacitors C4040 and C6045. An attenuator that contains the calibration adjustment is included at the filter input for filter variation compensation.

TABLE 5-6
PROGRESSION OF GAIN REDUCTION

Input Level	Point 1	Point 2	Point 3	Point 4	
		Beyond Logging Range			
X-10 dB	0.00316	0.01	0.316	0.1	0.216
X Level	0.01	0.316	0.1	0.316	0.684
X+10 dB	0.0316	0.1	0.316	1.0	0.684
X+20 dB	0.1	0.316	1.0	1.684	0.684
X+30 dB	0.316	1.0	1.684	2.368	0.684
X+40 dB	1.0	1.684	2.368	3.052	
X+50 dB	3.16	Beyond Logging Range			

The 1 kHz filter also uses a two-pole monolithic crystal filter with impedance matching LC networks at the input and output. As with the 10 kHz filter, input and output adjustments are provided by variable capacitors (C5030 and C6040, respectively). An attenuator that contains the calibration adjustment is included at the filter input for filter variation compensation.

The 100 Hz filter uses a pair of high-Q crystals in a balanced two-pole ladder configuration. These crystals are matched for both frequency and temperature characteristics. Input and output impedance matching is accomplished primarily by transformers T4019 and T7015. Two small capacitors in the same transformer circuit as the crystals (C6011 and C7011) are adjustable to cancel the parallel capacitance effect of the crystals. An attenuator that contains the calibration adjustment is included at the filter input for filter variation compensation.

Post VR Amplifier Circuit 20

The Post VR Amplifier circuit provides the final VR system gain to bring the signal to the required output level and provides the final bandpass filtering to assure clean performance. The circuit consists of two stages of gain followed by a filter.

From the 2nd Filter Select circuits, the signal is applied through jumper JJ to the input of common emitter amplifier transistor Q2056. The circuit includes potentiometer R2038 in the emitter circuit to allow for adjusting the post VR amplifier gain. The output is transformer coupled by T1059 to the base of feedback amplifier transistor Q1048. This circuit includes emitter degeneration through resistor R2042 and collector-to-base feedback through resistor R1052. The collector feedback is used in this instance to help provide a well-defined output impedance of 50 ohms. Input impedance to this stage is defined by transformer T1059 and resistor R1058 across the primary.

This final VR amplifier stage is designed to produce relatively high output current. This is required because the VR system is sometimes driven at a 10 dBm increased output level, and more current is required to prevent gain compression. A higher output level is required in low noise or low intermodulation distortion operation to compensate for the 10 dB of gain that is switched out of the Log Amplifier.

From the final amplifier, the signal is applied through the 1.2 MHz bandpass filter that consists of capacitors C2033 and C2018 and the components between. This filter is a double-tuned design and has an insertion loss of approximately 2 dB.

As an aid to understanding the overall VR system functions, it is helpful to understand some aspects of filter design. When designing a wide-bandpass filter, on the order of ten percent or greater, stopband attenuation becomes a severe problem in two-pole filters. The result is that a given filter design will degenerate into either a high-pass or a low-pass filter. The design of the filter in the Post VR Amplifier circuit degenerates into a low-pass unit. However, since the VR system includes a bandpass filter at both the input and the output, and since the input filter in the VR Input circuit degenerates into a high-pass unit, the overall VR system exhibits clean stop-band performance.

The output signal from the filter is applied through coaxial connector J682 to the Log Amplifier. The output level is nominally at 0 dBm. Refer to Diagram 19 while reading the following.

Digital Control Circuits 19

The Digital Control circuits provide address and data decoding for the bandwidth and gain step selection and band identification for the band leveling gain control, and provide the control signals to the other sections of the VR system to accomplish those tasks.

Address and data valid lines from the analyzer address bus are applied to address decoder U4022 through connector P1049 pins 9, 10, 12, 13, 14, and 20. Data bit 7 is also applied through P1049 pin 7 as a supplemental address bit to select between the latch that stores data for bandwidth selection, and the latch that stores data for band identification and gain step selection.

Data lines from the analyzer data bus are applied through connector P1044 pins 1, 2, 3, 4, 5, 6, and 8 to data latches U3010 and U3017. Note that only data bits 0, 1, and 2 are applied to latch U3010.

Latch U3010 stores the data that selects among the filters in the 1st and 2nd Filter Select circuits. Outputs from pins 2, 19, and 16 of U3010 are applied to the decimal decoders in the filter select circuits through edge connector pins G, F, and E to control the filter selection. Decoding is done within the filter select circuits because it results in fewer lines between circuits and provides extra buffering to reduce noise transmission between circuits.

Latch U3017 stores the data that select among the various gain steps and that identify the selected frequency band for control of the band leveling function. Outputs from pins 2, 5, and 6 (corresponding to data bits 0, 1, and 2) are applied to inverter transistors Q4035, Q3035, and Q4037, respectively. From Q4035, the output signal is applied through connector P1049 pin 32 to the 10-dB Gain Step circuit to control attenuator switching. From Q3035, the output signal is applied through edge connector pin 25 to the 20 dB Gain Steps circuit to control switching of the 10 dB attenuator; from Q4037, the output signal is applied through edge connector pin 27 to the 20 dB Gain Steps circuit to control switching of the 20 dB attenuator.

Outputs from latch U3017 pins 15, 16, 19, and 12 (corresponding to data bits 3, 4, 5, and 6) are applied to band decoder U3025, an open collector decoder. If Band 1 is selected, pin 1 output is low. These outputs are used in conjunction with a 7.5 volt reference source, provided by operational amplifier U3038B and driver transistor Q3036, to produce signals that are applied to a second operational amplifier (U3038A). These signals correspond to the amount of gain that must be supplied for each band to level the output for all bands. The analog output from U3038A is applied through edge connector pin BB to the gain control PIN diode in the Band Leveling circuit. For example; if Band 1 were selected (U3025 pin 1 low), the current path is through potentiometer R2031 and the emitter of Q3036 emitter. From the potentiometer arm, the voltage is applied through resistor R2033 to the summing junction at the input to operational amplifier U3038A, driving that junction more negative. This shifts the output from U3038A more positive to increase the current through band leveling PIN diode CR2025. Potentiometer R2031 provides for calibrating the current through the PIN diode for Band 1. In similar fashion, the other potentiometers (R3034, R3030, R3019, R3022, R3024, R3026, R3032, R3029, and R3025) allow for adjusting the current for each of the other bands.

Also, for Bands 4 through 10, a diode may be connected to each decoder output to transmit that low signal via edge connector pin DD to the gain control transistor in the Band Leveling circuit to increase the gain in each of those bands. Those diodes are CR3022, CR3023, CR3024, CR3025, CR3031, CR3027, and CR3026, and are installed during final instrument calibration.

5 Volt Regulator Circuit

The 5 Volt Regulator circuit (U3041) supplies the required 5 volt source for use in the analog sections of the VR system. This is required because of noise in the 5 volt digital supply.

LOGARITHMIC AMPLIFIER AND DETECTOR

21

Refer to the block diagram adjacent to Diagram 21. The Logarithmic (Log) Amplifier and Detector accept input signals from the VR circuits, with a dynamic range to 90 dB, then amplifies these signals so the output is proportional to the logarithm of the input, and applies the signals to a linear detector to produce the video output signal. By controlling the compression curve characteristics, each dB of change in the input signal level results in an equal increment of change in the output. Thus, in the 10 dB/division mode, each division of displacement on the screen represents 10-dB of input signal level change.

Log Amplifier Circuits

The Log Amplifier circuits logarithmically amplify the input signal from the VR circuits and apply the output signal to the Detector circuit. These circuits consist of seven ac coupled amplifier stages. Each stage has two gain values that depend on signal amplitude. In addition, the first three stages have an extra automatically selected gain value. The combined circuits provide high gain for low-level signals and low gain for high-level signals. For the output signal to be proportional to the logarithm of the input, more gain is required, for a change from −90 dBm to −89 dBm than a change from −1 dBm to 0 dBm. Thus, for a given stage of the seven, the gain starts at approximately 10 dB for a low-level signal and decreases to unity as the input signal level increases. In the first three stages, the gain becomes less than unity as the signal amplitude further increases.

Input signal levels nominally range between −90 dBm and 0 dBm. As the signal level increases, the gain decrease begins with the final stage and proceeds in succession back through the remaining six stages to the first. Since each stage produced approximately 10-dB of gain initially, and that gain was reduced to unity, the total gain reduction is 70 dB. With further increases in input signal level, three more gain change steps take place. The gain of the first three stages is reduced below unity approximately 7 dB for each stage. This reduction starts with the first stage and proceeds to the third, to provide an additional gain reduction of approximately 20 dB.

Thus, as the input signal increases from -90 dBm to +10 dBm, the gain through the amplifier decreases logarithmically so that the output signal is exactly proportional to the logarithm of the input. This is accomplished through a system of series diode limiting in each stage, with a second set of diodes for extra limiting in each of the first three stages. Refer to Diagram 21 while reading the following.

The following description of a simple three-stage log amplifier with one gain step in each stage is provided as an aid to understanding the concept of a logarithmic amplifier. For the example amplifier shown in the following three figures and described in the text, the gain of each stage is 3.16 volts (10 dB) up to an output level of 1 volt peak, then unity for output levels greater than 1 volt peak; that is, each stage uses one breakpoint. The breakpoint voltage is used for ease of illustration; the actual breakpoint voltage is significantly lower.

Figure 5-9 illustrates the amplifier and the input signal source. For purposes of discussion, assume that the source has a step attenuator at the output that will allow incrementing the input signal in 10 dB steps. Table 5-6 shows the progression of gain reduction above 1 volt at each amplifier stage output. Note that with each input level change of 10 dB, the output change at point 4 is 0.684 volt. The gain curve for one stage is illustrated in Figure 5-10. Also note, when the level at point 1 is increased beyond 1 volt it is beyond the logging range of the amplifier. Similarly, if the input level is decreased 10-dB below the nominal minimum input level, the output increment is different. A curve of the ends of the logging range is shown in Figure 5-11.

From the VR circuits, the signal is applied to input preamplifier Q3105 in the Log Amplifier circuits through coaxial connector P621. The input preamplifier provides transfer from 50 Ω input to the high impedance input of the 1st amplifier stage. The input signal is also applied to transistor Q2105, a common-base amplifier, that acts as a buffer to supply the 10 MHz IF signal to the rear panel connector.

From the input preamplifier, the signal is applied to the first of seven cascaded amplifiers that consist of Q3100/Q1095, Q3090/Q1080, Q3075/Q1020, Q3055/Q1050, Q3045/Q1035, Q3030/Q1025, and Q3015/Q6010, plus the associated circuitry. These stages are similar, except that the first three contain an extra set of diodes for a second gain step. The following description of the last stage is typical. The second step gain change in the 1st three stages is described afterward.

When the input level to transistor Q3015 is less than approximately 60 millivolts peak-to-peak, the transistor conducts enough to maintain forward bias on both series limiting diodes, CR4015 and CR4012. The RF signal path at that level is through the diodes, capacitor C5014, and resistors R4010H, R4010B, R4015 and R4010D, to common-base amplifier Q6010. The gain of the stage is approximately 10 dB under these conditions. As the input signal voltage increases, more current flows through CR4015, to increase the reverse bias of CR4012. This sharply reduces the stage gain to unity The signal current then flows only in R4010B, R4015, and R4010D. This change takes place during the positive-going portion of each cycle. The opposite occurs during the negative-

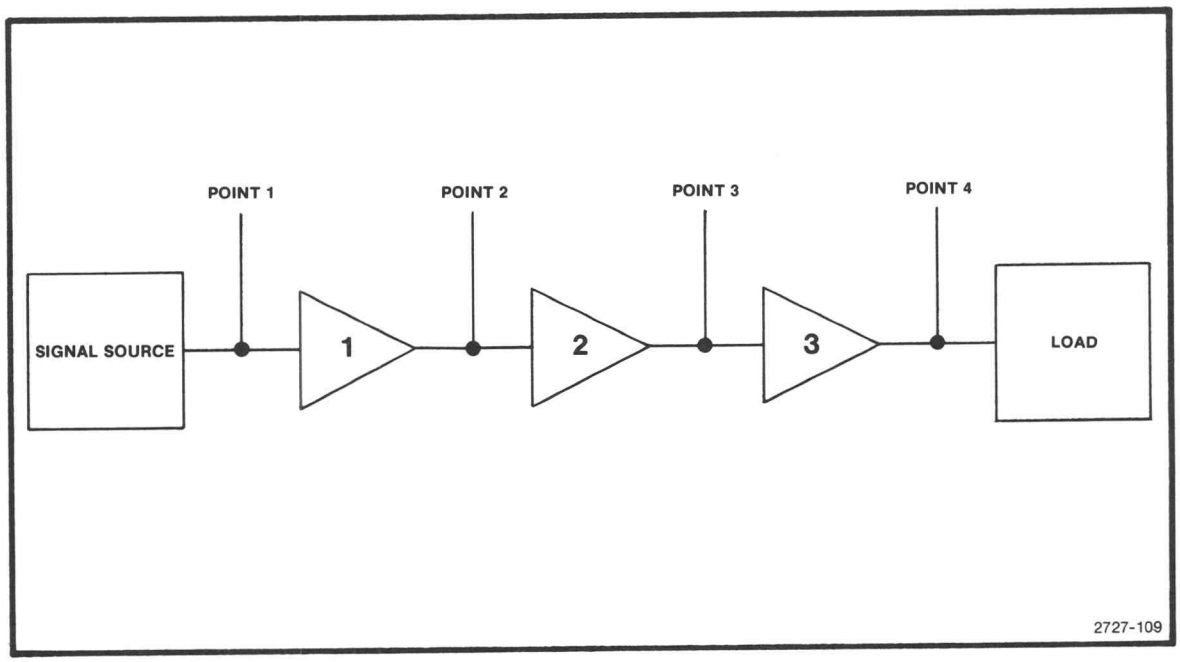

Figure 5-9. Three stage log amplifier.

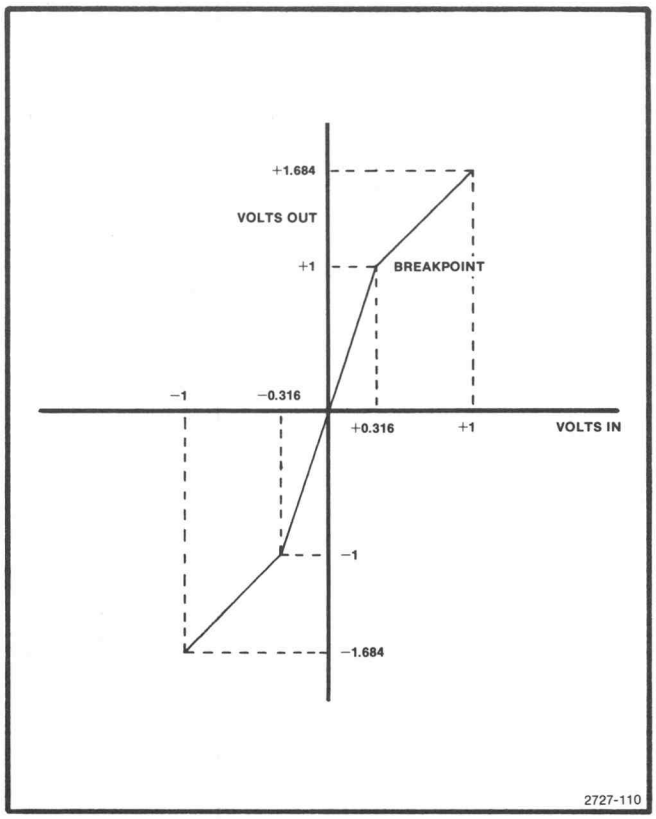

Figure 5-10. Log amplifier gain curve showing breakpoint.

going portion of the signal above the minimum input level. As the input signal increases beyond the point at which the gain of the final stage decreases to unity, the same sequence occurs in the preceding stage, Q3030/Q1025, and so on in succession, back to the first stage, Q3100/Q1095.

Signal levels above this point activate the second tier of gain reduction in the first three stages. Each stage incorporates a second set of diodes that reduces the gain by another 7 dB. In the first tier of gain reduction, reduction started at the last stage and proceeded to the first; in the second tier, the reduction starts at the first stage and proceeds to the third.

In the first stage, diodes CR3089 and CR2087, are forward biased when the stage is in the unity gain mode. Limiting occurs in the same manner as described above with a further increase in input signal level, and results in less than unity gain through the stage (approximately 1/3). The one, two, three reduction sequence is established by the values of pull-down resistors R3082, R2076, and R2066.

Detector Circuit

The Detector circuit detects and filters the Log Amplifier circuit output signal and produces the VIDEO signal that is transmitted to the Video Amplifier circuits. The circuit consists of an operational amplifier with a diode detector in the feedback path and a low-pass filter at the output.

Actually, the circuit called an operational amplifier is not easily recognized as such. It is made up of grounded emitter amplifier Q4025 and a differential amplifier consisting of Q4030 and Q4035. The summing node for the negative input is the base of Q4025 (the positive input is at the grounded emitter of Q4025). Also, the differential amplifier is designed for high impedance output to allow the current that is available from Q4025 to drive the operational amplifier very rapidly during the period when both detector diodes (CR5033 and CR5027) are effectively open circuited; that is, when the output is near 0 volt. When neither diode is conducting, it is necessary that the output change rapidly through that zone. Note that the network consisting of resistors R5032, R5029, R5020, and capacitor C5029 is included to stabilize the dc operating point.

Figure 5-12 shows a simplified schematic diagram of the detector circuit. As shown in this diagram, two detector diodes (CR5033 and CR5027) are used, but only the positive half cycle is taken as the output (from CR5027). The output from the collector of transistor Q4035 is applied to the diodes through capacitor C5035. Ac coupling is used on both sides of the detector to prevent temperature coefficient effects of the operational amplifier from affecting the detector output. This isolation provides that the detector charges and discharges capacitors C5035 and C5024 by the current induced in each half cycle of the signal without changing voltage level.

This detector operates as an area (average) detector despite the fact that the Log Amplifier circuits operate on peak principles. It is possible to use an average detector because of some very selective tailoring in the Log Amplifier circuits. For instance, resistor example R5021

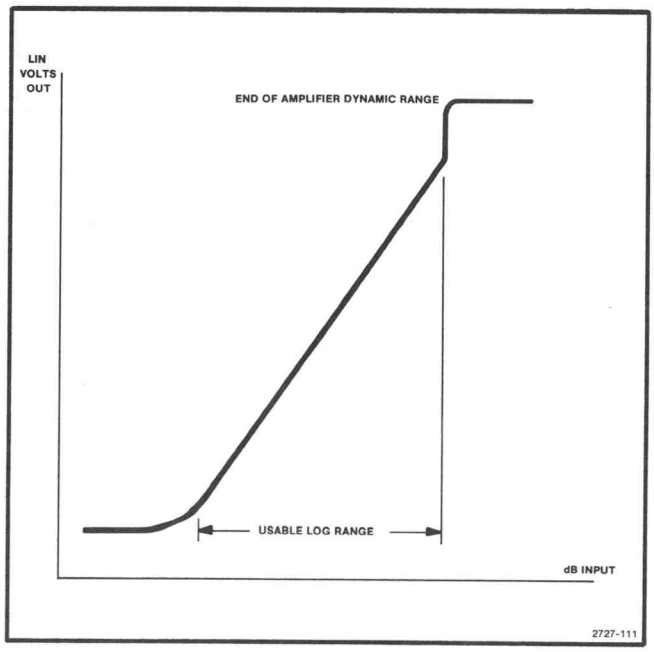

Figure 5-11. Ends of logging range.

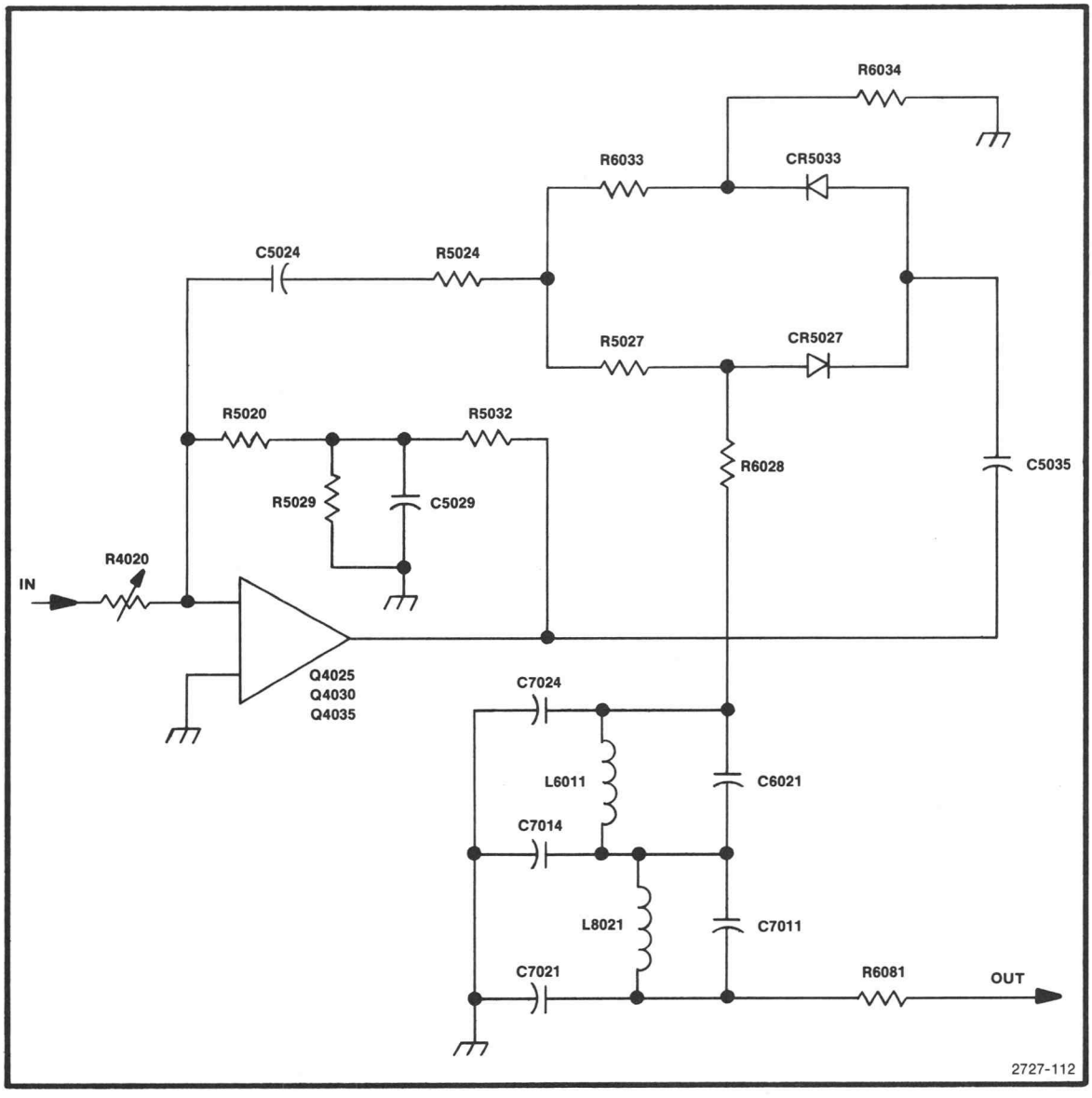

Figure 5-12. Simplified detector circuit.

in the final log amplifier stage is sized to reduce the amount of current standing in the final stage output diodes, thus tapering the curve very slightly to improve linearity at the lower end of the curve. Log Gain adjustment R4020, in the final amplifier stage, is adjusted for increased linearity at the top of the curve.

As shown in the diagram, the positive-going output signal, from the detector, is applied through a low-pass filter consisting of capacitors C7024, C7014, C7021, C7011, and inductors L6011, L8021, to the Video Amplifier.

6

DISPLAY SECTION

FUNCTIONAL AND BLOCK DESCRIPTION

The display section performs several functions: 1) It accepts the VIDEO signal from the IF section, and processes the signal, and provides the vertical crt plate drive signals. 2) It processes the sweep voltages from the sweep section and produces the horizontal crt plate drive voltage. (If Option 2, Digital Storage is included in the instrument, vertical and horizontal signals are further processed in that circuit group.) 3) It accepts character

information from the instrument data bus and generates crt plate drive signals to display alpha and numeric characters. 4) It accepts control levels from front panel beam controls and generates unblanking signals to control display presence, brightness, and focus.

Video signals from the IF section are applied to the Video Amplifier. In the logarithmic mode, the signal is amplified linearly and applied to the Video Processor. In the linear mode, amplification is exponental to convert the logarithmic characteristic to linear function. In either mode baseline compensation, from the Video Processor, is applied to the video signal to compensate for any unflatness in the front-end response. Also at the output of the Video Amplifier, a pulse stretch circuit alters narrow pulses so data can be displayed by the Digital Storage logic in instruments that include Option 2.

From the Video Amplifier, the output is applied to the Video Processor. Three functions are performed by the Video Processor. The first is unflatness compensation for front end response variations. Video filtering, the second function performed by this circuit block, allows for selection of six video bandwidths (30 kHz, 3 kHz, 300 Hz, 30 Hz, 3 Hz, and 0.3 Hz) under control of the instrument microcomputer. The third function is out-of-band blanking. This blanks the upper and lower ends of the local oscillator swept frequency range to provide a selected window for the display. This is also controlled by the microcomputer.

In instruments equipped with Option 2, the Digital Storage logic provides operator selection of various display modes for observing the signals from the Video Processor. These modes are: MAX HOLD, SAVE A, B-SAVE A, VIEW A, and VIEW B and signal averaging or peak level display. The circuit block consists basically of: 1) vertical circuits that digitize signals at 512 points across the display and store those digitized data for display or processing, and 2) horizontal circuits that translate the sweep signal into memory address into which the signal data are stored. The stored signals are then used for the various processing as required by operator display selection, and for recreation of the display. From the Digital Storage logic, horizontal and vertical signals for the recreated displays are applied to the Deflection Amplifiers.

The Deflection Amplifiers receives vertical signals from the Digital Storage (in Option 2 instruments), or the Video Processor, and sweep voltage from the Sweep section, along with readout data from the Crt Readout circuits and produce signals to drive the crt for the display. (In Option 2 instruments, the Digital Storage or Video Processor vertical outputs may be selected. In non-option 2 instruments, the Video Processor output is displayed. Likewise, horizontal signals from either the Digital Storage logic or the sweep section can be selected.) During the display segments in which digital crt readout is required, the Deflection Amplifiers input signals are supplied by the Crt Readout logic. The amplifier contains the switching circuits to perform the above selection functions, and amplifier stages to produce the plate drive signals.

Crt readout data is controlled by the Crt Readout logic. These circuits generate letters and numbers for display under control of the microcomputer. Using data received from the data bus, a character memory and generator circuit derives each character. Digital signals, describing each character, are then translated into deflection signals by digital-to-analog converters. These signals are applied to the switching logic in the Deflection Amplifiers.

Beam intensity, nominally from the front panel, are implemented in the Z-Axis logic. Unblanking for display of either signals or readout data, and baseline clipping is also implemented in the Z-Axis logic. Control of unblanking is by signals from the sweep section, the Crt Readout logic, the Deflection Amplifiers, and the Digital Storage logic.

VIDEO AMPLIFIER 22

Refer to the block diagram adjacent to Diagram 22. The Video Amplifier circuits provide for the selection of either logarithmic or linear display mode, for the selection of dB per division in logarithmic mode, for selection of pulse stretching in narrow peak signal operations, and for offsetting the signal amplitude during the signal identify mode. These circuits consist of the log mode amplification and dB/div switching circuits, the linear mode amplification and gain control circuits, the pulse stretch circuit, and the various digital control circuits. Refer to Diagram 22.

Log Mode Circuits

The Log Mode circuits accept the VIDEO signal from the Log Amplifier and process that signal to add offset for selecting the segment of the log amplifier gain curve to be displayed. It also allows for selection, under program control in the 492P, of display gain steps of 1 to 15-dB per division on the screen. (Only 2-dB and 10-dB/Div are selectable from the front panel. The 492P can select all steps under program control.)

The signal from the Log Amplifier, is applied to preamplifier U4090A. The VIDEO I signal from the Video Processor is also applied to U4090A. This signal compensates for flatness errors in the front-end circuits by offsetting the VIDEO signal in the opposite direction equal to the unflatness. The two signals are summed at the input of U4090B with the reference level set by Input Reference Level potentiometer R4071 (this reference level will be described later) and with the output from digital-to-analog converter U5041.

Converter U5041 converts the microcomputer commands to an offset signal which selects that portion of the Log Amplifier curve on which to place the display. The concept for this offset is as follows (refer to Figure 5-13):

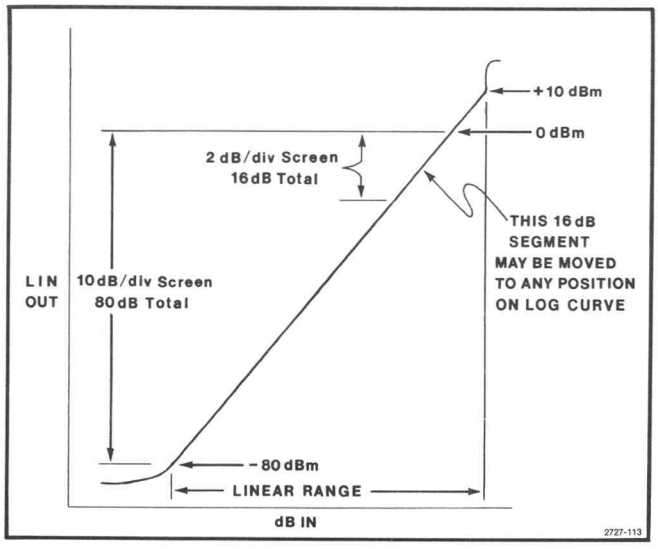

Figure 5-13. Selection of display position on log scale.

If the display is in dB/div, changing the POSITION control, which is located after the log amplifier, is the same as changing the signal level, or gain, before the log amplifier. Thus, instead of using a large amount of linear gain change before the log amplifier, a digital-to-analog converter is used to effectively move the display up or down the log curve. This process is called "offset" and it accomplishes the same effect as moving the POSITION control, except that the display on screen does not change, only the signal level required to reach the reference level changes.

Since the non-programmable 492 allows selection of either 10-dB per division or 2-dB per division, and the programmable 492P allows selection of 1 to 15-dB per division, the system must allow the gain to change while keeping the top of the screen constant, and must allow any 16-dB segment (in 2-dB/div mode) to be displayed. Nominally, the Log Amplifier operates with 0-dB or at the top of the screen.

The output of preamplifier U4090A is equivalent to 20 mV/dB. Full screen is always 2.2 volts. At 2.2 volts, the output of variable gain log amplifier U4090B is 0 volt, the only voltage at which the resistors in the switching network in the feedback circuit of preamplifier U4090B can be switched without changing the output voltage. (The switching network will be described later.) The 2.2 volt output of U4090A is adjusted during calibration to full screen by Input Ref Lvl (input reference level) potentiometer R4071.

From U4090B, the output signal is applied through FET Q5090 (if that transistor has been turned on by data bit 6 when 6 is high or a 1) to output operational amplifier U4090C, then through emitter follower Q4100 to the Video Processor via the front panel LOG CAL potentiometer. The Output Ref Lvl (output reference level) potentiometer, R4081 in the input circuit to U4090C, is used to adjust the output to provide a full screen display after Input Reference Level potentiometer R4071 is set for no change in the output of U4090B when switching from 10 to 2 dB or vice versa.

As an aid to understanding the system operation, it is probably useful to understand the basic calibration sequence that includes the above two controls. The sequence is as follows: 1) The digital-to-analog converter output voltage is calibrated by adjusting the front panel AMPL Cal control so that the output is appropriate for 10-dB per division. 2) The Log Amplifier detector circuit gain is adjusted so the Log Amplifier output agrees with the digital-to-analog converter output. 3) Input Ref Lvl potentiometer R4071, is adjusted for no change in output level from U4090B when alternately pressing the 10 dB and 2 dB selector switches on the front panel. 4) Output Reference Level potentiometer R4081 is adjusted for a full screen display.

The gain switching network provides for switching 15 resistance values into the feedback path of variable gain log amplifier U4090B, and consists of four FET switches (Q4075, Q4070, Q5070, and Q5075) and four resistors (R7071, R6074, R6073, and R6082). The FET switches, controlled by data bits 1, 2, 3, and 4 from the analyzer data bus, connect feedback resistors for U4090B in 15 value combinations as determined by the binary content of the four data bits.

In the non-programmable 492, only the 10 dB per division and the 2 dB per division selections are available and are controlled by front panel switches through the analyzer microprocessor. In the programmable 492P, the full 15 combinations are selectable through program control.

Linear Mode Circuits

The Linear Mode circuits accept the output from log preamplifier U4090A and rescale the signal level to linear values. Since no switching is provided in the Log Amplifier (that is, all signals are logarithmically scaled), to operate the system in linear mode requires that the signal level be re-exponentiated. Thus, high gain is required at the top of the screen and low gain is required at the bottom of the screen to offset the characteristics of the Log Amplifier.

In addition to the signal path described in the Log Mode circuits, the output from preamplifier U4090A is also applied to linear mode amplifier U4090D, an operational amplifier with a successive resistor network in the feedback path. From this amplifier, the output signal is applied through FET Q5095 (if that transistor has been turned on by data bit 5 from the analyzer data bus being a 1) to the summing node at the input to output amplifier U4090C. After this point, the signal path is as described in the Log Mode circuits description.

Starting at the signal level that represents the top of the screen (0 volt) at the output of linear mode amplifier U4090D, the operation of the network is as follows:

With a 0-dBm input from the Log Amplifier to the Video Amplifier, the output of U4090D is 0 volt. At that level, the feedback path is through only resistor R6104. The other feedback path resistors (R7079, R7076, R7092, and R7093) are not in the path because the switch transistors are biased off by the bias network consisting of resistors R7082, R7081, R6085, R7086, and R7095, plus diode CR7095. (The diode is included for temperature compensation purposes.) As the display moves away from full screen, the output of U4090D rises positive and transistor Q6115 is biased on, thereby placing R7097 in parallel with R6104 and reducing the gain of U4090D. Further increases in the output of U4090D cause transistors Q6110, Q6090, and Q6095 to conduct in sequence and add resistors R7096, R7092, and R7095, respectively, in parallel to the feedback path. The sequential adding of resistors into the feedback path effectively reduces the gain of U4090D exponentially. Although it may appear that such a system would result in steps of gain resolution, the reaction characteristics of the transistors smooth the transitions and results in a smooth exponential gain curve.

Pulse Stretcher Circuit

The Pulse Stretch circuit, under control of the analyzer microprocessors widens narrow peak signals to allow the Digital Storage circuit time to acquire such signals. If this is not done, the 9-microsecond digitizing rate of the Digital Storage circuits is too short to acquire very narrow signals. The circuits accomplish this function by stretching the fall time of fast pulse signals. The circuit consists of FET switch Q7110 and the associated components in the feedback path of the output operational amplifier U4090C.

When pulse stretch mode is not selected (by data bit 8 from the analyzer data bus being a 0), FET switch Q7110 is off. With Q7110 off, capacitor C7104 is not in the circuit and the normal feedback path for U4090C and extra pulldown current is provided through resistor R5108. This allows the U4090C output to fall as fast as it rises.

When pulse stretch mode is selected (by data bit 8 being a 1), FET switch Q7110 is turned on and capacitor C7104 is inserted into the feedback circuit to slow the fall of the output. Also, the only pulldown current is through resistor R5086. Diode CR7101 serves only to isolate the pulse stretch circuit from the output circuit of the output amplifier. Diode CR5101 turns on at low levels to prevent the amplifier output from going too far negative and slowing the response when the input changes. When the output of Q4100 swings positive, the diode CR5101 disconnects. The primary advantage of this circuit is that the operational amplifier removes offsets by controlling very closely the voltage at the emitter of Q4100.

The Identify circuit permits the operator to check displayed signals as true or spurious. This feature is implemented elsewhere in the analyzer, except for an offset that is applied in the Video Amplifier. The test is accomplished by changing the frequencies of the 1st LO and the 2nd LO an equal and opposite amount related to the harmonic number used. If the signal is true, it will not move. As a check, the display baseline of the signal that results from the frequency is shifted about one division so the alternate display is right below the other display.

Thus, if the display is two similar signals separated in amplitude, the signal is true. This offset is inserted from the analyzer data bus through latch U6050 and buffer U6060 to the summing node of the output amplifier U4090C.

Digital Control Circuit

The Digital Control circuits provide the control signals for selection of the various Video Amplifier functions and consist of address decoding, data latching, and buffering circuits. From the analyzer data bus, address data and the DATA VALID signal are applied to the address decoder U6070 through edge connector pins 30, 26, 25, 27, 28, and 31. The decoder produces two enable signals that are applied through inverter U5070 to gain latch U6040 and mode latch U6050.

The Gain latch IC U6040, is an eight-bit latch that supplies command data to eight-bit digital-to-analog converter U5041 to offset the Log Amplifier output signal. Mode latch U6050 is an eight-bit latch that supplies command data through buffer U6060 to select the resistors in the dB per division switching circuit and to select identify, pulse stretch, and log or linear mode.

VIDEO PROCESSOR 23

Refer to the block diagram adjacent to Diagram 23. The Video Processor circuits perform band leveling, video filtering, and blanking. The circuits that perform these functions are described in the following paragraphs. Refer to Diagram 23 while reading the following description.

Video Leveler Circuits

Video leveling compensates for those characteristics of the analyzer front-end microwave circuits that cause unflat response in Band 4 (5.4 to 18 GHz). (Since Band 4 is a multiplied band, any unflatness is accentuated.) This leveling is accomplished through a programmable perturbation of the display baseline that is opposite in direction from the flatness error in the front-end circuits. As analyzer signal power output decreases, the baseline rises an equal amount in compensation; or, as power output increases, the baseline falls an equal amount. The perturbation signal is actually produced by a normalizer integrated circuit that produces 19 evenly spaced values of the input voltage, but with each value corrected to compensate for unflatness.

The PRESELECTOR DRIVE signal from the 1st LO Driver circuits, is applied through edge connector pin 54 to an input translation circuit that consists of two current drivers (U3045A and half of Q3038, plus U3045B and the other half of Q3038). Since the PRESELECTOR DRIVE signal is directly related in amplitude to displayed analyzer frequency, the nominal +10 volts to −10 volts excursion voltage versus frequency curve in maximum span, relates to the full band width. This 20 volt maximum excursion is scaled to a precise current that ranges from 1 milliamp at +10 volts to 0 current at −10 volts for application to the normalizer IC to generate the baseline perturbation signal. Actual signal scaling is done by the U3045A/Q3038 current driver. The output signal is applied to the normalizer SWP IN input, pin 5. The second current driver, U3045B/Q3038, generates a 2 mA reference current for the normalizer. Horizontal Freq adjustment R1069 in the input translation circuits allows for shifting the 19 evenly spaced points up or down in frequency for compensation flexibility.

Normalizer IC U2039 operates as a shaper and contains 19 bi-polar transistors that turn on then off in sequence as the current input to pin 5 decreases from 1 mA to 0 mA. The collector of each of these IC transistors is connected to a potentiometer that allows for output trimming as shown on Diagram 23. Potentiometer R1061 is active with no current; R1013 is active at 1 mA. The trimming operation will be described later in these paragraphs.

From the normalizer, the output is applied through a jumper switch to buffer amplifier U2055B, which has a gain of five, then to offset amplifier U2055A. This amplifier has a gain of two, but its primary purpose is to offset the 0 to +5 volts (normal); 0 to −5 volts (invert) buffer output to the levels required by the Log Amp circuits. The range required by the Log Amp is −5 volts (min). The output voltage is a series of linear interpolations of the voltage between adjacent trimming resistors at the outputs of the normalizer. Compensation adjustment R1065 allows for setting correct interpolation.

Jumper switch P2060 selects the input side of buffer amplifier U2055B. This provides the means to invert the buffer output. During calibration, the procedure is as follows: Leveler Disable jumper P3035 is removed, a test signal with a normal uncorrected baseline waveform is displayed and stored, the Mode jumper (P2060) is removed and reinstalled in the invert position, the disable jumper is reinstalled, the stored waveform is displayed with the normalizer output waveform superimposed, and the 19 potentiometers are adjusted for exact compensation. The Mode jumper is then removed and reinstalled in the normal mode position. Thus, the output on the Video 1 line is opposite in polarity and equal in amplitude to the undesired variations.

As stated previously, significant compensation is required only on Band 4. Selection of Band 4 is indicated by data bit 0 switching to a 1 (see the leveling table at the top right-hand corner of Diagram 23). When DBO is a 1, pins 3 and 2 of switch U2015 are connected and the output from the offset amplifier (U2055A) is supplied out as the VIDEO 1 signal at edge connector pin 49.

Minor compensation is required for Band 1 only when preselection is specified (Option 1). With Option 1, a minor slope caused by the 1.8-GHz low-pass filter and 2 GHz limiter is corrected by adding two resistors in series between the PRESELECTOR DRIVE signal input and the VIDEO 1 output signal. These two resistors, R4023 and R3026 (note that R4023 is selected at factory calibration), form a voltage divider with R4046 and are inserted by connecting pins 6 and 7 of switch U3025. This switch is controlled by inverter Q4025, which is, in turn, activated by data bit 6 being a 0. As shown in the VIDEO BLANKING table on Diagram 23, data bit 6 is a 1 except when Option 1 is selected.

Video Filter Circuits

Video filtering provides selection of one of six bandwidths, under the control of the analyzer microcomputer. As shown in the VIDEO FILTER table on Diagram 23, data bits 1 through 4, select any of six bandwidths: 30 kHz, 3kHz, 300 Hz, 30 Hz, 3 Hz, and 0.3 Hz. Either wide or narrow-band filtering is selected at the front panel (30 kHz, 3kHz, and 300 Hz are defined as wide-band; 30 Hz, 3 Hz, and 0.3 Hz are defined as narrow-band), and the microcomputer makes the selection, based on such factors as sweep rate and total dispersion. With no video filtering (all data bits equal 0), the video system bandwidth is 500 kHz, as determined by circuits that follow the Video Processor, which has an internal bandwidth of 3 MHz.

Two signal inputs can be applied to the Video Filter circuits: EXT VIDEO and INTL VIDEO. The EXT VIDEO signal, from the rear panel auxiliary connector, is applied to pin 15 of switch U3063 through edge connector pin 53. The INTL VIDEO signal from the Video Amplifier circuits (via the front panel LOG CAL control) is applied to pin 2 of switch U3063 through edge connector pin 51. Note that the two left-hand sections of switch U3063 are normally held energized (pins 2 and 3 connected, pins 15 and 14 disconnected) by the +5 volt supply through resistor R3064. If the EXT VIDEO SELECT line (also from the rear panel auxiliary connector through edge connector pin 55) is grounded, those switch sections are deenergized and the External Video signal is applied through, or around, the filter to become the VIDEO FILTER OUT signal at edge connector pin 57. This is shown in the simplified schematic diagram of Figure 5-14.

As shown in the figure, when no filtering is selected (all data bits equal 0), either the internal or external signal is applied around the filter because the two right-hand sections of switch U3063 are not energized by data bit 1. When data bit 1 is high (1), filtering of some value will be selected by bits 2, 3, and 4, which control three sections of switch U2015 to add or delete filter time constant.

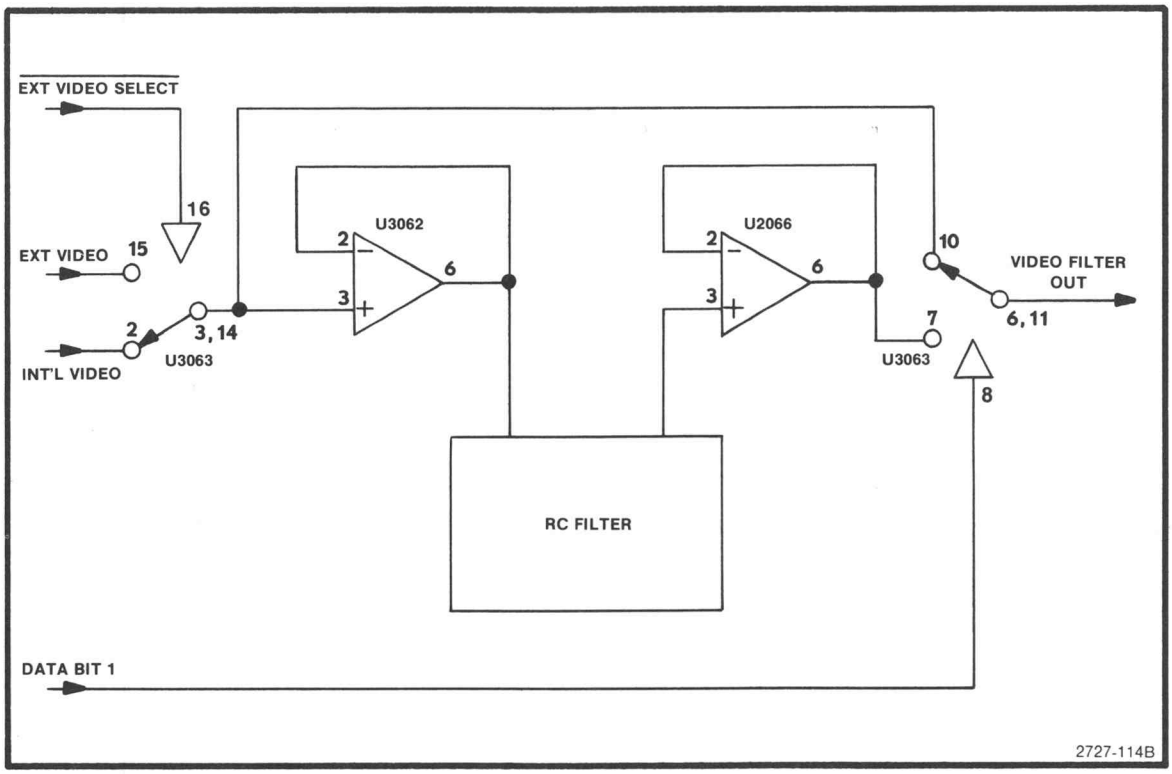

Figure 5-14. Video filter simplified schematic.

The filter consists of resistors R2023, R2021, R2022, and capacitors C3026, C2016, connected between two comparators (U3062 and U2066). Table 5-7 lists the components that are in the circuit for each of the six bandwidths. Note that data bits 2, 3, and 4 are applied to switch U2015 pins 8, I6, and 9, respectively, to select components.

From buffer U2066, the signal is applied through contacts 7 and 6 of switch U3063 and edge connector pin 57 as the Video Filter Out signal.

Video Blanking Circuits

The Video Blanking circuits allow for selective blanking of the lower and upper ends of the local oscillator range. This is required because the local oscillator sweeps full span mode regardless of the prescribed band limits. Thus, the video system is designed to effectively open a display window only during the time for display. Data bits 5, 6, and 7, under control of the microcomputer, select the appropriate amount of display for each band.

Since the video filtering is on the Video Processor board, and the PRESELECTOR DRIVE signal (which provides frequency information, in voltage form) is also available, this board is a logical place for video blanking. Switch U3063 incorporates a disable function that, when provided a low input, opens all switch sections regardless of individual section input. Using this feature, the Video Filter Out signal may easily be blanked at will.

Control for this disable function is from a combination of outputs from two comparators, U3015A and U3015B. Inputs to these comparators are from the PRESELECTOR DRIVE signal and a combination of voltage dividers that are switch selected under control of data bits 5, 6, and 7. The PRESELECTOR DRIVE signal is applied from edge connector pin 54 to the minus input side of U3015A through divider resistors R4013 and R4012, and to the plus input side of U3015B through divider resistors R4014 and R4011. These dividers reduce the +10 volts to −10 volts excursion of the drive signal to +2.5 to −2.5 volts, the maximum input level to the comparators.

Input to the plus side of U3015A is from a divider that consists of resistors R3011, R3012, R4024, and R4015. Note that the exclusion of R4024 is controlled by data bit 5 through pins 15 and 14 of switch U3025, and that the inclusion of R4015 is controlled by data bit 7 through pins 2 and 3 of the same switch. Thus the junction of divider resistors R3011 and R3012 may be connected to −10 volts through R4024 or to ground through R4015. Refer to the VIDEO BLANKING table on Diagram 23 for data bit states for different bands.

Input to the minus side of U3015B is from a divider that consists of resistors R4018, R4017, and R3028. Note the inclusion of R3028 is controlled by data bit 6 through pins 10 and 11 of switch U3025. Adding resistor R3028, connects the junction of R4018 and R4017 to +10 volts through R3028. This arrangement of switching negative and positive levels for comparison with the reduced

TABLE 5-7
FILTER COMPONENT COMBINATIONS

Bandwidth	DB=1	R2023	C3026	R2021	R2022	C2016
30 kHz	1	X	X	X	X	
3 kHz	1,4	X	X		X	
300 Hz	1,3,4	X	X			
30 Hz	1,2	X	X	X	X	X
3 Hz	1,2,4	X	X		X	X
0.3 Hz	1,2,3,4	X	X			X

PRESELECTOR DRIVE signal, enables the top and bottom extremes of the frequency excursion to be blanked by activating the disable function of switch U3063. This blanking is under the control of the microcomputer.

DIGITAL STORAGE 24 25

The addition of Option 2 to the basic 492 provides the operator with the capability of selecting the method for displaying and processing information contained in the digital storage memories. This allows operations such as determining the highest amplitude that occurred during a selected period (MAX HOLD mode), storing a signal for later examination (SAVE A mode), subtracting one signal from another (B MINUS SAVE A mode), averaging signals (AVERAGING mode), and comparing signals (VIEW A, VIEW B modes). Two memories are used independently in these operations to store two complete signals that are each digitized at 512 points across the sweep. Thus, two signals may be observed simultaneously or processed in various ways.

In MAX HOLD mode, the highest amplitude at each of the 1024 points in successive sweeps is stored and displayed. In SAVE A mode, a signal is stored in one memory for later examination, and is not updated. In the B MINUS SAVE A mode, the A signal is stored and not updated, then arithmetically subtracted from the B signal, which is stored and continually updated. In the AVERAGING mode, the display area is divided by a horizontal cursor. Above the cursor, signals are peak detected and displayed; below the cursor signals are averaged. In the VIEW A and VIEW B modes, the contents of the selected memory or memories are displayed.

Graphical presentation of mathematic functions or experimental data is common today. One class of such graphs is those that have a single Y value for each X value. An alternate presentation of the data in this graph would be a table in which the X coordinate values were simply listed along with a corresponding Y value for each X value. In further simplification, if the first X value and the spacing between X values (assuming that all spacings are equal) were known, the two column table could be reduced to a single column with the X value implied by the position of the Y value in the column. This then is the essence of digital storage: to convert a vertical analog voltage (Y coordinate value) to a binary number and insert that number in a stored table. The location of the Y value in the table is determined by converting to binary the analog sweep voltage (X coordinate value). Once the table is created by storing a set of binary numbers representing values across a waveform, the waveform can be recreated at any time by converting the table values (Y) and positions (X) back to analog voltages representing amplitude and sweep position.

The digital storage system used in the 492 uses two tables: A and B. Table B is always updated on every sweep. Table A is changed unless SAVE A mode is selected. There are 512 A values and 512 B values. The spacing between values is the same throughout both tables, but the starting point for table B is shifted slightly so that, when both tables are being read, the read out values are interlaced.

When the signals are recreated, the operator has the option of displaying either A or B, or both A and B. If both are to be displayed, and SAVE A mode is also selected, the contents of both table A and table B are drawn, each display in its own trace. If SAVE A mode is not selected, the contents of both table A and table B are displayed on one trace, with 1024 value positions across the screen. A third trace option is also available. In the B minus A mode, the displayed values are those resulting from an arithmetic operation and are the difference between the contents of table A and table B for each X value of analog sweep voltage.

Since a signal waveform is continuous and a table has discrete X values, an algorithm is used to determine the Y value to be stored for a particular X value. This allows the operator to select one of two methods for determining Y values: peak or average. The Y analog voltage is continually sampled, with the sampling rate dependent upon sweep speed. For each X value, there are always at least two samples and there may be as many as 2^{17} samples. From this set of samples then, the user may select either the largest sample value (peak value) or the mean of all of the samples (average value). Selection between peak and average is controlled by the front panel PEAK/AVERAGE control, which sets a dc level that is compared with the analog vertical input to produce the PEAK/AVERAGE logic signal. When the input signal is below the level selected by the front panel control, the signal is averaged; when the input is above that level, the peak signal is displayed. The dc level appears on the display as a positionable horizontal line. This marker line is created by switching the dc level to the analog output line during the marker cycle to produce the MARKER logic control signal.

Superimposed on the marker line is an intensified spot called the UPDATE MARKER, which indicates the X value at which new Y values are being computed for display update. The update marker is formed by comparing the analog sweep input to the display analog X output. When the two are the same value, the sweep is forced to pause, thus increasing the marker intensity at that point. Refer to the block diagram, adjacent to Diagrams 24 and 25.

Central to the 492 digital storage system are two specially designed and manufactured IC's; U1023 and U2032. Vertical section IC U1023 contains the vertical acquisition and display logic, and peak detection, signal averaging, Z axis blanking, and special Y-value processing circuits. Horizontal section IC U2032 contains the horizontal acquisition address counter, horizontal display counter, 10-bit RAM address multiplexer, and a programmable logic array system control matrix. The remainder of the digital storage control circuits consists of two 8-bit digital-to-analog converters, two 10-bit digital-to-analog converters, one 10-bit latch, 8k bits of random access memory, and various ancillary circuits. Timing is controlled by clock pulses from the microcomputer board to pin 1 at approximately a 1 MHz rate. The two primary IC's, U1023 and U2032, are described as appropriate at the beginning of the vertical and horizontal section detailed descriptions that follow.

Vertical Section 24

Vertical Control. (Refer to Fig. 5-15.) The vertical analog voltage is converted to a Y binary value using an 8-bit successive approximation register. Nine clock cycles are required for each Y conversion. After the conversion has taken place, the successive approximation register produces the negative-going SYNC signal. Most functions on both the vertical and horizontal control IC's are synchronized by this signal. On the negative-going transition of SYNC, the successive approximation register is reset to 10 00 00 00 (binary) and the next conversion cycle begins. Incoming data bits are latched into the successive approximation register on the negative-going clock transition. From the register, the output data are applied to the peak and the averaging circuits.

The averaging circuit consists of three groups of circuits: those that accumulate the grand total of all of the Y values for a given X value (this total is called the numerator), those that count the number of samples that make up the numerator (this total is called the denominator), and those that subtract and shift to perform the division process.

As each new Y value is converted, it is added to the eight least significant bits of the numerator. Each carry from the most significant bit of this addition is counted by a 17-bit ripple counter. The contents of this counter and the 8-bit sum are cascaded to form a 25-bit grand total. Each time a new sample is added to the numerator, a second 17-bit ripple counter is incremented to produce the denominator.

A division cycle is initiated when the horizontal control IC U2032, located on Diagram 24, detects a change in the X value. At that time, U2032 produces the ST DIV (start divide) signal. Upon receipt of this signal, and in synchronization with the SYNC signal, vertical control IC U1023 performs several functions (refer to Fig. 5-15): 1) It latches the current numerator in a 25-bit latch (25 to 1 data concentrator in the block diagram), and latches the denominator in a 17-bit latch (17 to 1 data concentrator in the block diagram). 2) It clears the numerator adder circuits (25-bit summation register in the block diagram). 3) it performs a 17-bit priority encode on the denominator and loads a 1 in the appropriate cell of the 25-bit shift register. 4) It loads the latched numerator and denominator serially into the divide circuit (subtractor in the block diagram) using the contents of the 25-bit shift register as a mask. 5) It clears the denominator ripple counter (17-bit counter in the block diagram) to zero.

Ten clock periods are required to load the numerator and denominator into the divide circuit. The cycle starts on a SYNC pulse and the first bit of the quotient is available shortly after the first clock pulse following the next SYNC pulse. Division is performed by repeated subtract and shift operations. The quotient is arrived at serially with the most significant bit first. Only 8-bit accuracy is required, so, by using the priority encoder output as a mask, the divider circuit is loaded with the 8 most significant bits of the denominator and the 16 most significant bits of the numerator. (Ripple borrow for a 17 by 25 bit subtractor would be so long as to be impractical.)

The peak circuit consists of a peak detector and an 8-bit peak shift register. In operation, the previous peak Y value from the last set of samples is still stored in the peak shift register at the start of a conversion cycle. At that time, the peak detector, which is a serial compare circuit, is set to the state that will question whether the old or new number is larger. Each bit of the new value is then compared with the corresponding bit of the old

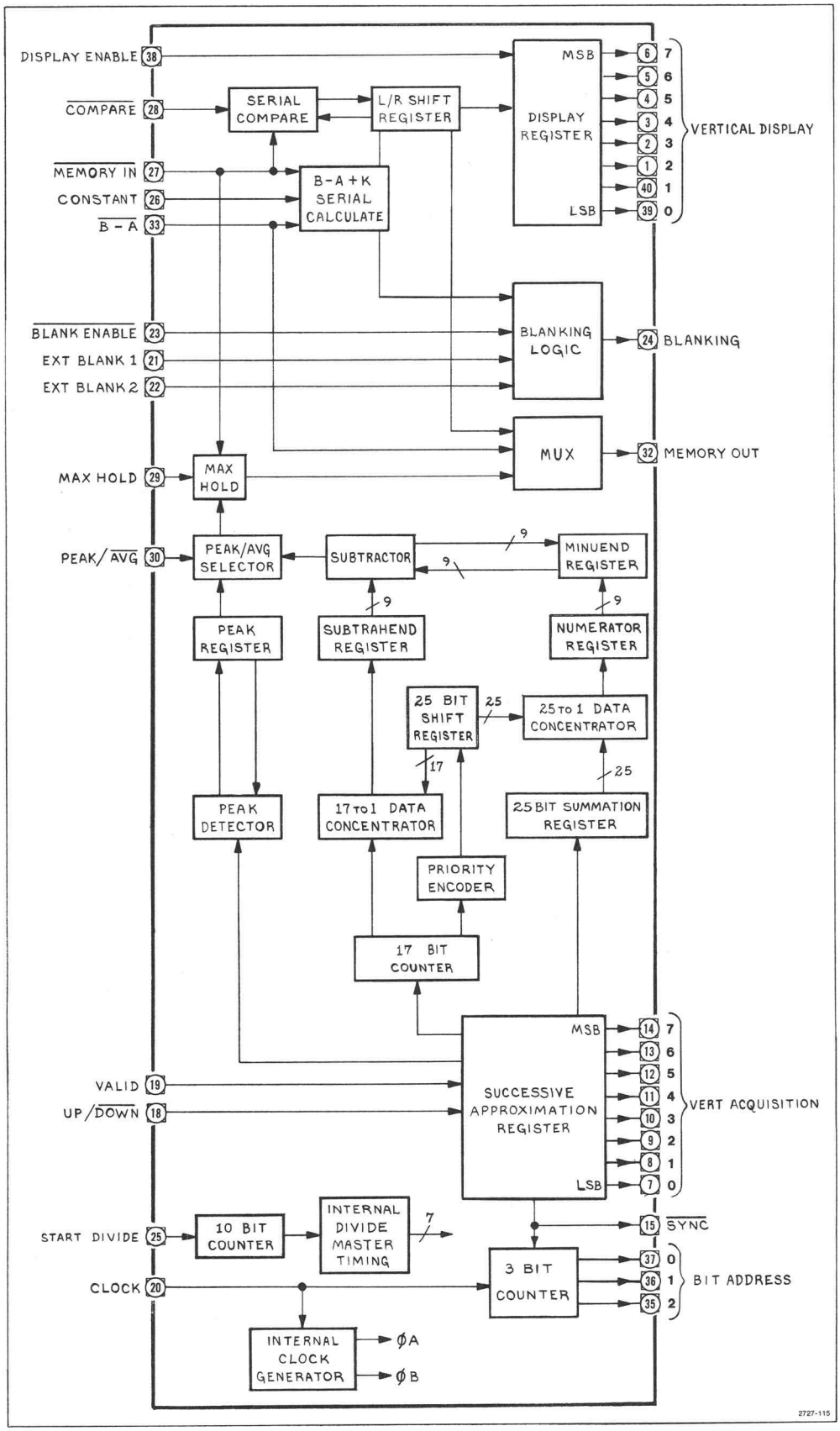

Figure 5-15. Vertical control IC block diagram.

value, most significant bit first. When one value is found to be larger, a flip-flop is set and the smaller number is gated out of the shift register. The start divide logic signal being true then forces the peak detector to select the new value and ignore the number in the shift register.

The peak/avg selector, a multiplexer, selects either the peak or average value to be routed to the memories under control of the PEAK/AVG signal. The selector output is routed through the max hold circuit, which functions in the same manner as the peak detector. When the MAX HOLD signal is high, the value that is routed to the output multiplexer is the larger of two values: the current memory value at the subject X coordinate or the previously selected peak or average value.

Timing for setting up the divide operation and clearing the numerator, denominator, and peak circuit is controlled by a 10-stage Johnson counter. NOR-gate taps are taken from appropriate stages to develop the necessary clear and latch timing pulses. Because the denominator is loaded into the divide circuit using a priority encoder, the most significant bit is always a 1. Space and power were saved by modifying the subtractor and not storing this 1.

All data enter and leave the memory serially. Data read from memory enter an 8-bit shift register, and timed by SYNC, are transferred to the vertical display output latch (display register on the block diagram). The same shift register is used for other purposes, so the DISPLAY ENABLE signal prevents non-display information from being transferred to the output latches. An example of data moving through this shift register is that during the B minus A display mode. The A value is first read from memory and stored in the shift register. As the B value is ready, the subtration is done serially and the answer is applied to the shift register. Since the subtraction must be performed least significant bit first, a set of exclusive-OR gates change the order of extracting B from memory. The direction of shift for the shift register is reversed also to present the most significant bit to the proper display latch. The shift register output is also applied to the output multiplexer.

In the subtraction, the operation performed by the serial calculator is not merely B minus A. The actual expression implemented is (B-A) + K, where K is a serial input external constant specified by the user. This permits zero to be placed anywhere on the screen. To avoid confusion, when (B-A) + K results in an off-screen position, the subtractor blanks the display. This is done by examining the carry bit and borrow bit when the most significant bit is calculated. If either bit is a 1, the screen is blanked.

When SAVE A mode is not selected and both A and B are being displayed, maximum resolution is obtained (1024 points across the display). If this display includes a very narrow pulse, it is possible that the top of the pulse is only as wide as a single X coordinate (2 to 2^{17} samples). If this maximum value were in the B table and SAVE A mode were selected and B turned off, there would be an apparent drop in amplitude. For this reason, when SAVE A mode is selected, a special set of circuits in U1023 compares all A and B values that have the same X value and stores the larger in table A. This is accomplished by first reading the B value and storing it in the display shift register. Then, as the A value is read, it is compared with the B value and the larger of the two is loaded into the display shift register. Finally, the number in the shift register is written into memory from the shift register. This operation is performed once each time that SAVE A mode is selected.

Vertical control IC U1023 also contains a 3-bit synchronous counter that identifies the specific bit of an 8-bit vertical value that is to be read from memory or written into memory. This is the only memory addressing that is performed by the vertical control IC. All other addressing is under control of the horizontal control IC (U2032).

Digitizing Circuits. The input vertical signal, VID FLTR OUT, coupled through edge connector pin 60 is applied through buffer U2033 to sample and hold switch U1033, which is controlled by flip-flop U1011B. Flip-flop U1011B generates the sample pulse and is enabled during the clock cycle after the last sample as indicated by the least significant bit from the successive approximation register in U1023. The switched sample is then applied through buffer U2032 to a summing junction, at which point the output current from the digital-to-analog converter (U2024) that is supplied from the successive approximation register is subtracted from the sample current, and the difference current is applied through comparator U1031B to pin 18 of U1023 as the UP/DOWN signal. Thus, the combination of the successive approximation register, the digital-to-analog converter, and the sample and hold circuit effectively produces the binary equivalent of the input sample.

Address Decoding. The address decode logic accepts inputs from the address bus and produces the control signals for read and write operations: CONT W (control write), DATA W (data write), and DATA R (data read). The control write signal is used to gate the control word from the data bus into control register U1022 to generate mode control signals. This control word consists of five bits that represent front-panel functions. If output Q6 is low, a peak operation os forced; if output Q6 is high and Q7 is low, an average operation is forced. The data read and data write signals are applied to the interface logic to control memory read and write operations.

Interface Logic. The interface logic in general performs control and interface function between the active data circuits in both the vertical and horizontal sections and the rest of the 492. It allows the microcomputer to control the functions of the storage system and to access the digital storage memory, and it contains the circuitry for serial-to-parallel and parallel-to-serial conversion. (The microcomputer uses parallel transfer; the digital storage memory uses serial transfer.) Shift register U2021 is used to read data from memory to the data bus. Register U1021 is used to store information from the data bus for transfer to memory. Multiplexer U2016 performs the parallel to serial conversion and applies the

data output to gate U2015B, which acts as a buffer to supply either the multiplexer output or the MEM OUT (memory output) signal from U1023 to the memory as the DSDI (digital storage data input) data train.

The interface circuit group at the lower right hand corner of the diagram is the handshaking logic that works with the horizontal control circuits for access to memory and for control of when to increment the memory address counter. In either a data read or data write operation (when the corresponding signal goes high), flip-flop U2014B is triggered, which in turn releases the BUS REQ (bus request) line, allowing that signal to go high. This signals the horizontal control circuit that access to memory is required. When the horizontal circuits recognize that request, those circuits pull the BUS REQ line low at the same time that SYNC is low. The interface logic detects the BUS REQ and SYNC low condition through U1013A, U1013B, U2011A, and U2012C, and produces the low BUS GRANT signal to indicate access to memory. The BUS GRANT signal then enables shift register U2021 to shift data from memory or enable register U1021 and multiplexer U2016 to shift data to memory as indicated by the DATA R and DATA W lines. At the end of a data read cycle, gates U1012B and U2023C produce the INCR ADRS (increment address) signal to increment the address register in the horizontal circuits.

Maximum Hold. As described previously, when MAX HOLD mode is selected, circuits in U1023 compare the binary equivalent of the input signal for a given X value with the information in memory for that same X value and cause the larger of the two to be stored in memory. The control signal that initiates this action is produced from Q5 of control register U1022. In combination with the VALID signal from the horizontal circuits, this signal produces the MAX HOLD command to U1023 through buffer U2023E and gate U1025A.

Constant Circuit. As described previously, in the B minus A operation, a constant is used. This constant is internally selectable with switch S1014. This switch, in combination with multiplexer U1015, supplies the constant to U1023. Multiplexer U1015 is in turn controlled by address bits 0, 1, and 2 to provide the proper switch signal to U1023.

Output Circuits. From the U1023 vertical display register, the parallel data output is applied to 8-bit digital-to-analog converter U1024. The converter output is then applied through a vector generator, consisting of an integrator (U1032 and C1031) with an associated feedback loop sample and hold circuit, to the output storage/cursor switch. Integrator U1032 has a time constant that provides a ramp lasting between the existing sample and the new sample (that is, between sync pulses). Circuits U1033A and U1034 and capacitor C1038 make up a sample and hold circuit with U1034 acting as an output buffer. From U1034, the output current through resistor R1032 subtracts from the digital-to-analog converter output current to modify the slope of the output ramp. The output of the vector generator is then applied to switch U1033B, which selects between the stored data and the marker under control of the buffered PK/AVG LVL (peak/average level) control signal from U2034B and supplies the output to the horizontal circuits.

Peak/Average Level Circuits. The buffered PK/AVG LVL signal is also supplied as a mode control signal to U1023 in combination with; the sample and hold up/down output from U2032, the VALID signal from the horizontal circuits, and Q7 of the control word from U1022 (always a 1), through buffer U1031A, gates U1025C, U1025D, U1025B, and inverter U2023D.

Horizontal Section 25

A block diagramm of the Horizontal control IC U2032is illustrated in Figure 5-16. The horizontal analog voltage is converted to a current table value through the use of a 10-bit tracking analog-to-digital converter, which consists of an up/down interlock and 10-bit up/down counter (U2032) and an external 10-bit digital-to-analog converter (U2036). As the sweep moves to the right, the counter increments; as the sweep retraces, the counter decrements. Each time the counter increments, a new X coordinate value is generated (the digital-to-analog converter output) and a ST DIV (start divide) signal is generated to start the storage cycle. The increment clock is the SYNC signal, the decrement clock is the basic 1 MHz clock divided by two. When SAVE A mode is selected, the counter skips every other binary number. Thus, only B coordinates appear as addresses.

Intelligence for the horizontal system is provided by a programmable logic array ROM state device (PLA). This PLA determines which trace is to be written on the screen, determines when to switch from read to write, generates the B-A coordination signals for vertical control IC U1023, controls the incrementing of the 9-bit display counter, and processes requests for the memory bus. Of these, the only function not obvious is the memory bus request. When an external device elects to read from or write to memory, it must request permission by allowing the BUS REQ (bus request) signal to go high. When that time becomes available, the PLA pulls the BUS REQ line low, signalling the start of a request cycle. For the next eight clock cycles, the multiplexer output lines are driven to the high impedance tristate mode.

The combination of the up/down interlock, 10-bit up/down register, 9-bit display counter, and horizontal display multiplexer constitute the primary circuits that: 1) convert the sweep voltage to binary form to generate X values to be written into memory, or 2) read the X values from memory by counting sync cycles and causing the external logic to read stored data from memory and produce a vertical signal (Y value) for each corresponding X value. During acquisition cycles, the 10-bit up/down counter, controlled by the up/down interlock, operates in a loop with the external 10-bit digital-to-analog converter to derive the equivalent (X value) of a sample section of the sweep voltage. From the counter, the 10-bit output is applied to the 10-bit up/down register. During display cycles, the 9-bit display counter counts sync pulses to

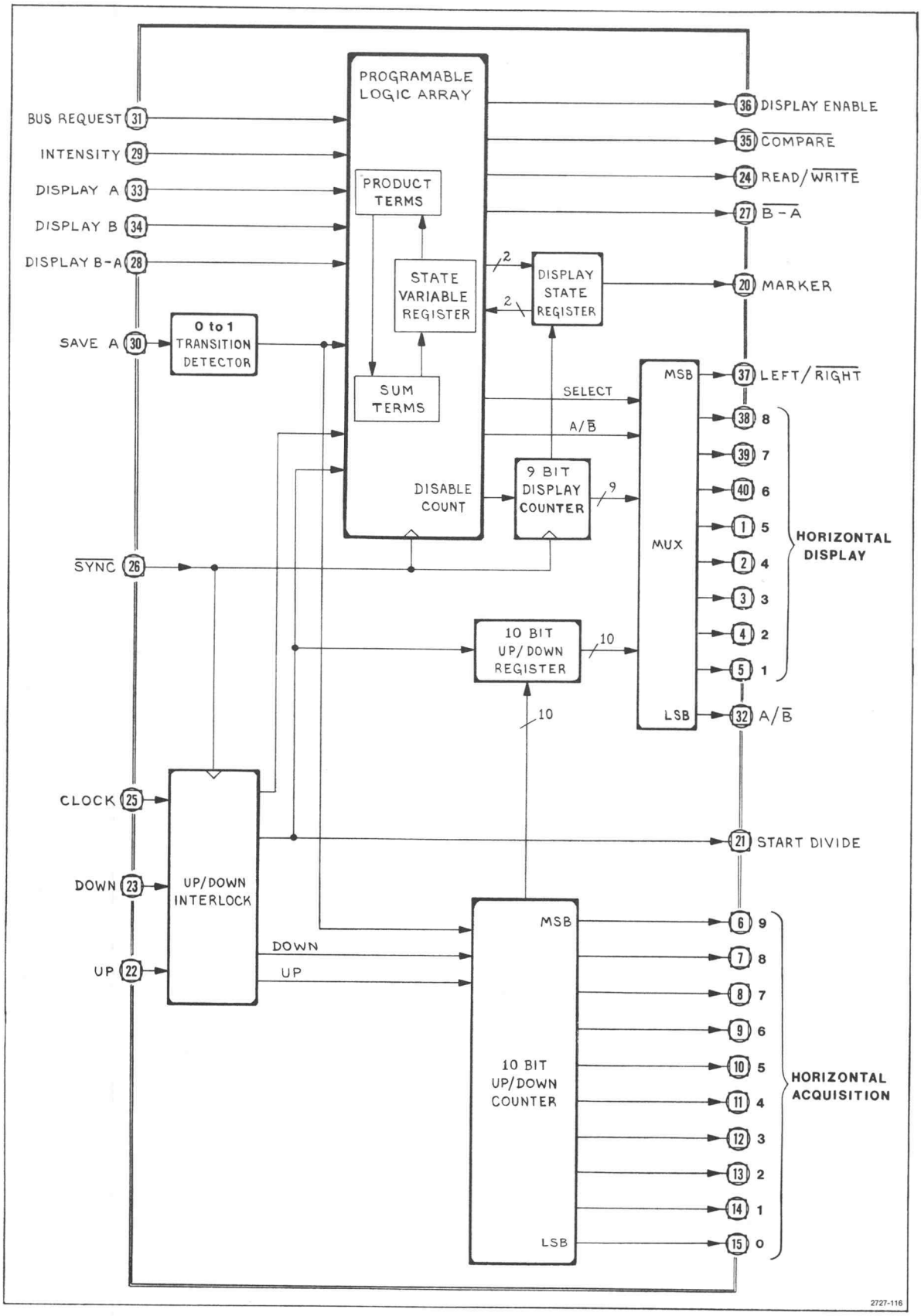

Figure 5-16. Horizontal control IC block diagram.

derive the X value. Either the 10-bit up/down register output or the display register output is applied to the horizontal multiplexer under control of the SELECT signal from the PLA. From the multiplexer, the output is applied to the memories.

Address Registers and Buffers. Address counting is accomplished by registers U2022, U2016, and U2012. These count INCR ADRS (increment address) pulses after having been reset to zero by the CONT W (control write) signal from the vertical section. From the address register, the outputs are applied to tristate buffers U1022 and U1016, which buffer the 10-bits of address from the counters and the DSR/W (digital storage read/write) signal line from the vertical section interface logic and multiplex those signals onto the HD (horizontal display) lines and R/W (read/write) line to the memories. These buffers are enabled only during the bus grant portion of the cycle for display of memory data. At all other times horizontal control IC U2032 outputs, control the HD lines to determine the memory address for update of memory data.

Tracking Analog-to-Digital Converter. As discussed previously, the 10-bit digital-to-analog converter operates as part of the loop that derives a binary equivalent of the SWP (sweep) input signal from the Sweep board. Converter U2036 accepts the output from the U2032 10-bit up/down counter and converts that output to an analog current that is subtracted from the sweep signal, which is applied at edge connector pin 60 and through buffer U2044B. The result of this subtraction is then supplied to up comparator U2038A and down comparator U2038B, to produce the UP or DOWN signal, as appropriate to control the direction of the count of the 10-bit up/down counter in U2032. The counter then counts in the appropriate direction, thereby changing the digital-to-analog converter output to reflect the proper value. Overflow detector U1032 and underflow detector U1034 prevent the counter from counting too high or too low.

Update Marker Circuits. From U2032, the HD (horizontal display) signals are also applied to 10-bit latches U1024 and U1018. The outputs of these latches are applied to 10-bit digital-to-analog converter U2034. From the converter, the output current is applied through buffer U2044A, where it is converted to a voltage, to comparator U2042, which compares it with the sweep voltage and applies the output voltage to digital one-shot U1014A. The period of this one-shot is determined by counter U2024 under control of the low DISP ENBL (display enable) signal from the PLA in the horizontal control IC U2032. DISP ENBL, when high, indicates that valid data are to be transferred. Conversely, when DISP ENBL is low, the lack of valid data indicates retrace. One-shot U1014A produces the INTENSITY signal that is used to temporarily prevent counting by the 9-bit display counter in U2032, thereby effectively stopping the beam for a short time and causing a bright spot on the marker trace (cursor) to indicate the X point being updated. Also note that buffer U2044A also produces the HORIZ SIG (horizontal signal) that is sent to the Deflection Amplifiers.

Fast Retrace Blanking. Between the display of the B memory contents and display of the A memory contents, a fast retrace occurs. This retrace, unlike that following the A memory display (cursor), is not required to be seen and is thus blanked. This is accomplished by blanking control flip-flop U1014B, which is controlled by the most significant bit of the memory address and the display enable signal during a marker cycle.

Memories. Integrated circuits U1026 and U2026 provide 8k bits of random access memory for storage of the 1024 data points used in the digital storage system. Addressing is controlled by address tristate buffers U1022 and U1016 during display of memory data and by horizontal control IC U2032 during memory update.

DEFLECTION AMPLIFIERS 26

Refer to the block diagram adjacent to Diagram 26. The Deflection Amplifier selects from among several inputs to generate the drive signals for the crt plates, and generate a signal to drive the auto-focus portion of the Z Axis circuit. Input signals are from the Horizontal Sweep, Readout, Video Filter, and Digital Storage circuits.

Horizontal Section

Signal lines HORIZ SIG (from the Digital Storage circuits) and SWEEP (from the sweep circuit), through edge connector pins 49 and 51, are applied to switch IC U7055. One half of U7055, under control of the STORAGE OFF signal from the Digital Storage circuits, selects either HORIZ SIG or SWEEP inputs. When the STORAGE OFF line is floating or pulled high, the SWEEP signal is selected; when the line is pulled low, the HORIZ SIG signal is selected. The selected signal is then divided down from 1V/div to 0.5V/div by resistive divider R7051 and R7081 and buffered by U7073. From buffer U7073, a sample of the signal is applied to a rear panel connector via edge connector pin 48. The signal is also applied to the other section of switch U7055 along with the HORIZ R/O signal from the Readout circuits. Selection between these two signals is controlled by the R/O OFF signal, also from the Readout circuits, through edge connector pin 3. When R/O OFF is floating or pulled high, the signal from buffer U7073 is transmitted through the switch; when the line is pulled low, the HORIZ R/O signal is selected.

From U7055, the signal is applied to a shaper network to compensate for non-linearity in the crt deflection characteristics. This network consists of resistors R3051, R3052, R4059, R4058, R4057, R4062, R4061, and R3059, plus diodes CR4052, CR4051, CR4058, and CR3058. Note that HORIZ POS voltage from the front panel via edge connector pin 47 through resistor R2053 is applied to the shaper circuit so the shape correction factor relates to the crt deflection.

The shaped signal is then applied through preamplifier U2060 to the Deflection Amplifier circuits. The feedback path around U2060 includes HORIZ GAIN adjustment R1055 to calibrate the amount of compensation required for deflection sensitivity.

The horizontal deflection amplifier consist of two similar circuits, one for each horizontal deflection plate. One circuit is an inverting amplifier, the other operates in-phase. Inputs to the inverting side are through the parallel combination of resistors R3049, R3048, and capacitor C4057 to Q4038A. High-frequency response compensation is provided by the series connection of resistor R3048 and variable capacitor C4057. High-frequency feedback is controlled by capacitor C3043.

Input to the non-inverting side is through resistors R5020 and R5029 to the base of Q4025A. R3019 and R5035 set the dc level for the feedback loop to the base of Q4025B. Variable capacitor C5021 provides adjustment to set transient gain. Again, high frequency feedback is controlled by capacitor C2021.

Gain of each amplifier section is approximately 20. (Horizontal deflection sensitivity of the crt is approximately 21.3 V/div per side.) Each section is single ended and incorporates at the input side, a gain-degenerated dual (for temperature compensation) PNP transistor connected as a differential amplifier. For example, Q4038B of the right deflection amplifier drives emitter follower Q4047.

Signals with a low rate of change drive the output transistor through R5037, P3033. As the rate of rise increases, the drop across R5037 increases and when it reaches 0.6 volt, either Q4035 or Q4042 are biased on. These transistors provide the high current drive for the output transistors. When the signal rate of change is low, Q1043 drives the crt deflection plate and Q1049 provides bias current for the amplifier. As the rate of rise increases, C3039 couples signal to the base of Q1049. Q1049 provides the positive drive to the deflection plate, Q1043 the negative drive. Each output transistor can provide a 200 volt excursion in about 1 us.

The horizontal amplifiers operate with approximately 1 milliamp of bias current in the output stage, as set by the current through resistor R3031 and the resistors connected at the base and emitter of output transistor Q1049. The current through resistor R3031 also provides the operating current for the dual input stage (Q4038A and B). Emitter follower Q4047 operates at approximately 2.5 milliamps. The output stage is degenerated for fast steps by emitter resistors R1045 and R1034. For a 0-volt input, the output operating level is set by current from the −15 volt source through resistor R4033. Dc feedback resistor R3045 sets this output level at approximately 142 volts.

The above description of the right-hand (inverting) section is applicable to the left-hand (non-inverting) section except for the circuit element designations.

Output signals from the second half of switch U7055 are also supplied to the auto focus amplifier (IC's U6093, U6102, and transistors Q7097, Q7103). Amplifiers U6093 and U6102 produce a negative absolute value signal that is three times higher in amplitude than the signal from switch U7055. This amplified signal is then used to produce a shaped current by transistors Q7097, Q7103, and resistors R7102, R7101, R7107, R7108, to apply to the Z Axis Interface circuits through edge connector pin 48. This signal will sink from 0 to approximately 0.8 milliamps of current from an external node at a voltage of approximately 0 volt.

Vertical Section

Signal lines VIDEO FILTERS OUT (from the Video Processor circuits) and VERT SIG (from the Digital Storage circuits), through edge connector pins 53 and 52 respectively, are routed through switch IC U6055. One side of U6055, under control of the STORAGE OFF signal from the Digital Storage circuits, selects either VIDEO FILTERS OUT or VERT SIG. Note that the VIDEO FILTERS OUT signal is buffered by IC U7065 to prevent changing load transients from affecting the signal level. When the STORAGE OFF line is floating or pulled high, the buffered VIDEO FILTERS signal is selected; when the line is low, the VERT SIG signal is selected. The selected signal is inverted and clamped to ground by U6065. (Both the VIDEO FILTERS OUT and VERT SIG signals are specified at 0.5 V/div with 0 volt for the baseline and positive voltages above the baseline The signal is re-inverted and offset by buffer U6073 so center screen represents 0 volt. From buffer U6073, a sample of this centered signal is applied to a rear panel connector via edge connector pin 46. The signal is also applied to the other side of switch U6055 along with the VERT R/O signal from the Readout circuits. Selection between these two signals is controlled by the R/O OFF signals, also from the Readout circuits. When R/O OFF is floating or pulled high the signal from buffer U6073 is transmitted through the switch. When the line is pulled low the VERT R/O signal is selected.

The vertical section shaper (resistors R3061, R4065, R4067, R3071, R3064, and diodes CR4063, CR4064) and preamplifier (U2062) operate the same as the horizontal section. Transistor Q4078 limits positive excursions to approximately one division below the top of the screen to protect the output stages from being overdriven.

The vertical output stages are similar to the horizontal stages with the exception of higher bias current. Current flow of approximately 1 mA through resistors R3095 and R3098 result in approximately 5 mA in the output stages. Resistors R5081 and R5099 are of less resistance than R5041 and R5027 in the horizontal section to correct for the increased current in dual input stage transistors Q4083 and Q4101.

Comparator U6024 compares the level of the signal from baseline clamp U6065 with a reference level set by divider R7032, and R7034 to produce the CLIP signal for the Z-Axis Interface circuits. The CLIP line is pulled low when the Video signal is more negative than the reference level (approximately 1 division above baseline), and pulled high by R7021 if the signal is more positive than the reference level.

Z AXIS CIRCUITS 24

Refer to the block diagram adjacent to Diagram 27. The Z Axis circuits take the various beam control inputs such as SWP GATE, INTEN, etc., combine them, and furnish the drive currents and bias voltages required to operate the crt electrodes. The Z Axis circuit consists of the Intensity Control Logic circuits, which control the crt beam current for normal signal display operations. It also includes the unblanking gates which furnish current to the Z Axis Drive Amplifier to drive the crt control grid. The Z Axis circuits also include voltage-setting circuits for astigmatism, crt trace rotation coil, geometry , and other crt electrode voltages. Refer to Diagram 27 while reading the following description.

Z Axis Driver Amplifier

The Z Axis Drive Amplifier Q3047, Q4058, and Q4059, is driven by two sources, exclusive to each other: U2038B/Q2042 drives the amplifier during readout display periods, and U2038A/Q2044, drives the amplifier during sweep display periods. U2039 is an AND-NOR gate that is connected to provide the logic to one input of NAND gate U2038A which turns Q2044 on or off. The R/O OFF line and the output of U2039 must both be high for U2038A to furnish current to Q2044. Table 5-8 lists the conditions under which U2039 will output a high to U2038A.

TABLE 5-8
J2039 TRUTH TABLE

U3046 output (line 28)	0	0	0	1	1	1	0	0	0
CLIP	0	0	0	0	0	0	1	1	1
Z Axis Blank	1	1	1	1	1	1	1	1	1
Storage Off	0	0	1	0	0	1	0	0	1
SWP GATE	1	0	1	1	0	1	1	0	1
U2034, pin 13	0	0	0	0	0	0	0	0	0

Only the combinations shown in the truth table plus a high on R/O line will gate a low out of U2038A. When U2038A output is low emitter current is furnished to Q2044, which in turn will furnish current through R2051 (the input resistance of the Z Axis Driver Amplifier) to Q3047. U2034 is a single-shot that produces a 3-us pulse to blank the crt beam during trace return between readout and signal display.

The other source of input current to the Z Axis Drive Amplifier is Q2042. This transistor is turned on by U2038B when R/O UNBLANK is high and the R/O OFF is low.

Q1028 serves as a current source for the divider (R1030-R1025) that sets the operating point for Q2042 and Q2044 which sets the intensity level. Diodes CR1045 and CR1043, connected from base to base of Q2042 and Q2044, limit the display intensity by preventing the bases from going more positive than about 0.6 volt above the emitter voltage of Q2022. This circuit, which includes the adjustment (R1027), sets the maximum current for both Q2042 and Q2044.

The Z Axis Drive Amplifier is an operational amplifier consisting of transistors Q3047, Q4058, Q4059, and related components. The input resistance for the amplifier is R2051, and the feedback resistor is R3052. The output is clamped by diodes CR3059 and CR3066, to protect the amplifier from transient surges in case of crt arcing.

Transistors Q1017 and Q1015 provide current for the trace rotation coil. The adjustment (R1021) sets the current so the displayed trace is aligned with the graticule.

Transistors Q3045, Q4063, Q4065, and related circuitry are for use in future applications.

HIGH VOLTAGE SUPPLY 28

Refer to the block diagram adjacent to Diagram 28. The High-voltage Supply furnishes the -3860 volt to the crt cathode, the filament voltage for the crt, and provides dc restoration for the Z AXIS DRIVE signal. The circuit consists of the following: 1) The high-voltage oscillator, which produces the crt filament voltage and the 200 Vac that is stepped up and applied to the voltage doubler circuit. 2) The voltage doubler, which rectifies and filters the high voltage for application to the crt cathode. 3) The high-voltage regulator, which samples the high voltage and regulates the operation of the high-voltage oscillator. 4) The Z Axis clipper and rectifier circuits, which couple the Z AXIS DRIVE signal to the crt control grid.

High Voltage Oscillator. This circuit consists of transistor Q1073, transformer T2065, and associated components. The output of the oscillator, approximately 200 Vac, is coupled across T2065, where it is stepped up for application to the Voltage Doubler, and stepped down for application to the crt filament.

Voltage Doubler. The voltage doubler consists of CR4041, CR4035, C4027, C5021, C4024, R3038, and R1039. The output of the doubler is taken off the anode of CR4035 and applied to the crt cathode. Reference voltage for the regulator is taken off the end of R1039.

High-Voltage Regulator. This circuit consists of amplifier U4083 and surrounding components. The high voltage is applied through a voltage divider consisting of R1017B and R1017C, which is connected through R1042 to +15 volts. The sample of the high voltage at pin "U" is applied through R4075 to the input of comparator U4083. The correction signal, in the form of dc drive, is applied to the base circuit of Q1073 to set the oscillator current.

CR4078 and CR4077 at the input to U4083, protect the input against excessive voltage excursions. The circuit consisting of CR4071, R3079, and R4074 protect the oscillator if the +100 volt supply should fail. Normally,

CR4071 is back-biased. If the +100 volts is not present, CR4071 conducts and clamps the input negative; the output of U4083 swings negative and Q1073 remains cut off. This circuit ensures that Q1073 will begin oscillating only after U4083 switches. CR3077 (in the output circuit of the regulator) prevents the base circuit of Q1073 from going negative.

Z Axis Clipper. This circuit consists of diodes CR1056 and CR1046, plus associated components. 225 Vac from pin 8 of T2065 is coupled through C1058 and R1048 to the junction of CR1046 and CR1056. The regulator circuit consisting of VR1041, Q1047, and R1051, hold the cathode of CR1046 at +110 Vdc. Thus, if the Z Axis DRIVE signal is +110 Vdc, the two diodes clip the incoming 225 Vac to a total excursion of 1.2 volts. If the Z Axis peak-to-peak voltage is at ground potential, the ac voltage at the junction of the two diodes swings from ground to +110 volts. The voltage that passes the clipper circuit is coupled through C1041 to the Z Axis rectifier. The Z AXIS DRIVE signal is also coupled directly to this circuit, where it is coupled through C1041 to the crt grid circuit.

The clipped Z Axis drive signal is rectified by CR2044 and CR2046, which are the principle components of the second section of the Z Axis circuit. The rectified voltage is then fed to the grid of the crt. C1041 couples the fast changes of drive voltage to the crt grid to speed up the response of the grid circuit. Neons DS2052 and DS2057 protect the crt from high-voltage arcs from external sources. R1044 and R1053 protect CR2046 and CR2044, respectively, from external high voltage surges.

CRT READOUT 29

The CRT Readout assembly stores readout characters and generates deflection and Z-Axis signals to display the characters. It also handles the frequency dot marker display. Both character and frequency dot displays are time-shared with the spectrum trace.

Generating Readout

CRT readout is handled by sequential logic clocked at 3.41 MHz supplied by the Processor board. The readout circuitry (Fig. 5-17) comprises:

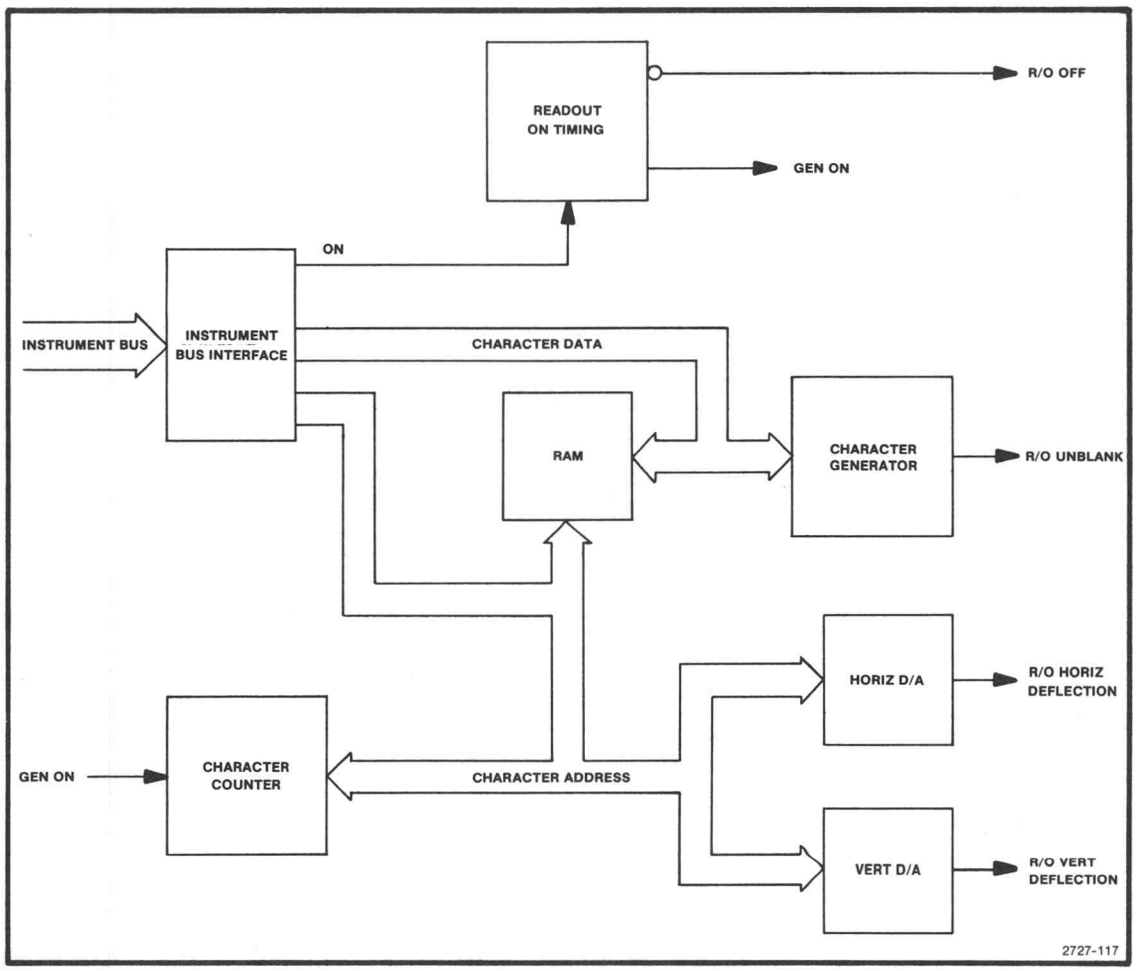

Figure 5-17. Simplified crt readout block diagram.

Readout-on timing RAM for character storage character counter to access the RAM and control the scan; character generator to unblank the crt beam; D/A converters to deflect the crt beam; and instrument bus interface to store characters and control display. A more detailed block drawing is provided with the schematic, Diagram 29.

Up to 32 characters can be displayed in a line across the top of the crt and another line across the bottom; either of two sets of characters (page 1 or page 2) can be selected for display. Page 1 is used for normal front-panel readout; page 2 can be used for message input over the GPIB.

Readout-On Timing. Characters are drawn one at a time, allowing a portion of the spectrum to be drawn between each character. The character duty cycle is in the range of 10 to 25 percent; because it varies with the character drawn, the time-sharing is pseudo-random, reducing the effect of gaps in the spectrum display by moving them on the trace.

The readout-off time is set to 175 microseconds by one-shot U2044 (Fig. 5-18). Flip-flop U2036B asserts GEN ON after U2044 times out, allowing a character to be drawn. When the character is finished, ROW 0, $\overline{\text{COL 0}}$ resets the flip-flop, retriggering the off-timer. Of course, the ON control bit must have been set by the microcomputer to get readout (as discussed below under Instrument Bus Interface).

If BLANK (MSB of the character data) is not set, the GEN ON flip-flop unasserts RO OFF through AND-gate U1038B; this switches the readout deflection signals onto the deflection amplifier inputs on diagram 26. BLANK can be set by the microcomputer as it loads a space into the character RAM so the readout does not steal time from the spectrum trace to scan a blank character.

Character Scan. Although the 8678 character generator IC is often used in raster scans, in this application it is forced to draw complete characters, one at a time as shown in Figure 5-19. The character is drawn as a pattern of dots in an 8 X 8 matrix where the top row and

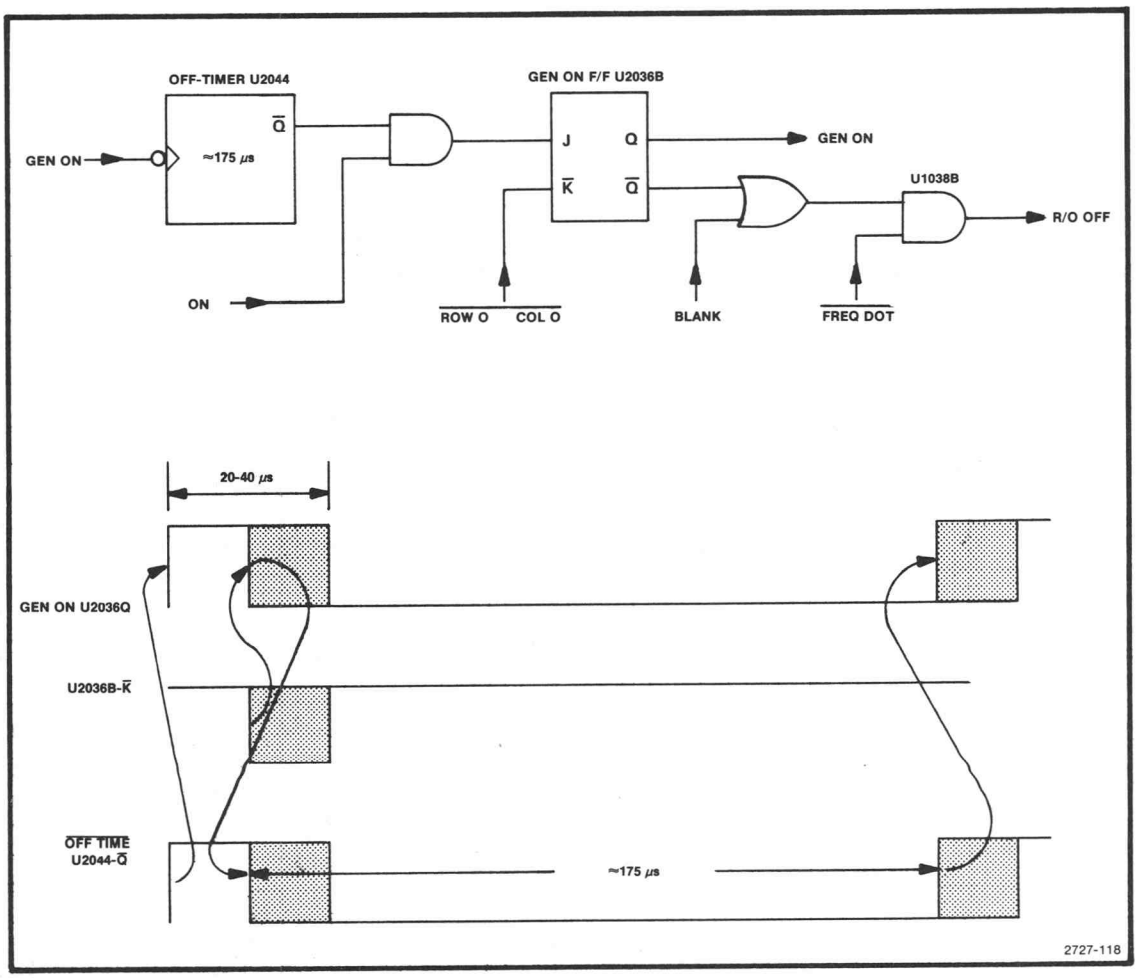

Figure 5-18. Character on/off timing.

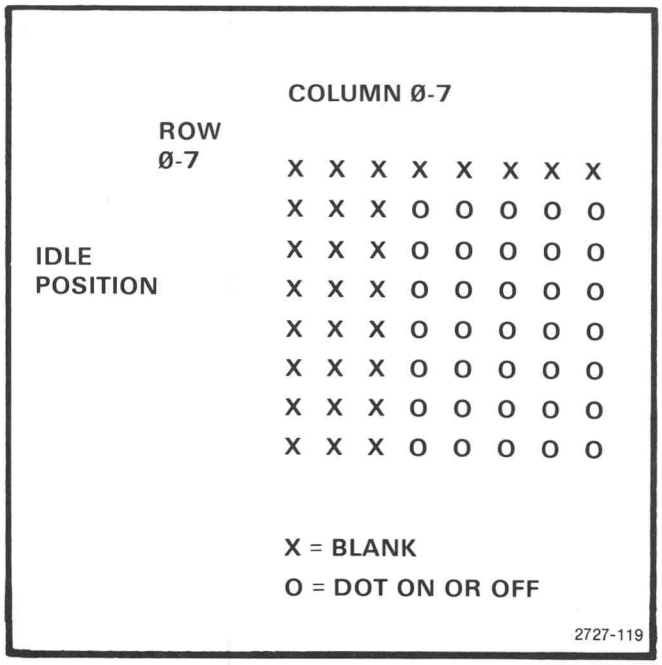

Figure 5-19. Character scan.

first three columns are blank. These blank dots allow for beam retrace and spacing. The idle position between characters is indicated on the figure.

Character counters synchronize the horizontal and vertical scan with the Z-axis signal from the character generator IC to draw the character. These counters, U2016, U2012, and U2018, are wired as a modulo 4096 counter to count the column (bits 0-2), the row (bits 3-5), and position of the character (bits 6-11). Bits 6 through 10 represent the horizontal position and bit 11 the vertical position (top or bottom). The position bits also address the character in RAM (assuming the readout is turned on by the microcomputer). The counters are enabled only when the generator has control of the crt beam (GEN ON) and INC is high; INC low stops the beam to write a dot on the CRT.

The way the counters are wired forces the D/A converters to step through the character horizontally a row at a time. At the same time, the pattern of dots is accessed under the control of the timing decoder logic, U1022A and U1014. The AND-gate and decoder combine to control the character generator (U1028), which generates the correct pattern of blanking to draw the pattern of dots for the character.

The 8678 (U1028) character generator IC (Fig. 5-20) contains a ROM with the correct pattern of 64 bits for each of the 64 characters in its repetoire. The bit patterns are accessed by a decoder that operates on the ASCII code on the character generator inputs. The pattern of bits is multiplexed one 8-bit line at a time into a shift register that is clocked out one bit at a time to control the crt Z-axis.

Character Generator Timing. The character generator timing lines are called DOT, LINE, $\overline{LE}$, and $\overline{CLR}$. Each cycle of DOT clocks one dot (bit) out of the shift register. A positive transition on LINE switches the next line (row) of dots onto the shift register inputs; the dots are latched by a negative transition on $\overline{LE}$ (load enable), setting up the shift register to display another row of dots. CLR resets the line counter to begin drawing another character.

DOT is ANDed from GEN ON, INC, and CRT CLK by U1022B. Inversion by the gate, restores the phase relationship of the DOT input and the inverted clock used by the rest of the character generator. $\overline{LE}$ is gated by U1022A when the character counter reaches column 2. This loads the shift register with the next row of dots, which is displayed starting at column 3. LINE advances the line (row) counter after the scan of the current row begins to set up the next row of dots on the shift register inputs; this occurs at column count 4. $\overline{CLR}$ is asserted only once during the scan of each character. It is decoded by U1014 when the character counter reaches row 1, column 0, the first non-blank row of dots scanned in each character.

See the character timing figure (Fig. 5-21) for the sequence of events to scan a character. At 1 on the figure, the character generator finishes a character. When the counter advances, decoder U1014 asserts ROW 0 COL 0, resetting the GEN ON flip-flop on the next clock. This stops the counter at row 0, column 1 (2 on the figure). When U2044 completes the time-out period and again sets the GEN ON flip-flop, the character counter resumes the scan, first causing $\overline{LE}$ (at 3) and LINE (at 4). Just before the scan enters the actual character area (at 6), $\overline{CLR}$ resets the character generator line counter (at 5). The break (7 on the figure) indicates that the scan continues. After the character is scanned, the scan returns to the idle state; 8 and 9 correspond to 1 and 2 on the timing figure.

Dot Delay. Each bit shifted out of the character generator is the value of a dot in the 8 × 8 matrix: 0 for a blank and 1 for a dot that is to be written. As the scan progresses at better than 3 MHz, a rather faint character display might be expected. To brighten the dots that are written, a shift register inserts some dot delay by stopping the counters while holding the crt beam unblanked. The dot delay timing is shown in Fig. 5-22.

A high on the character generator output (U1028-11) sets the dot delay shift register (U1036A,B,D) input high (assume Q of U1036C is high). It also sets the unblanking flip-flop (U2036A) J input high; once set, the flip-flop unblanks the beam during the rest of the dot delay cycle. Because the shift register must have completed any previous dot delay before entering a new cycle, the character generator high output also gates INC (increment) low at U1022C (assuming the microcomputer has turned on the readout). On the next clock, the highs on the two register inputs are latched.

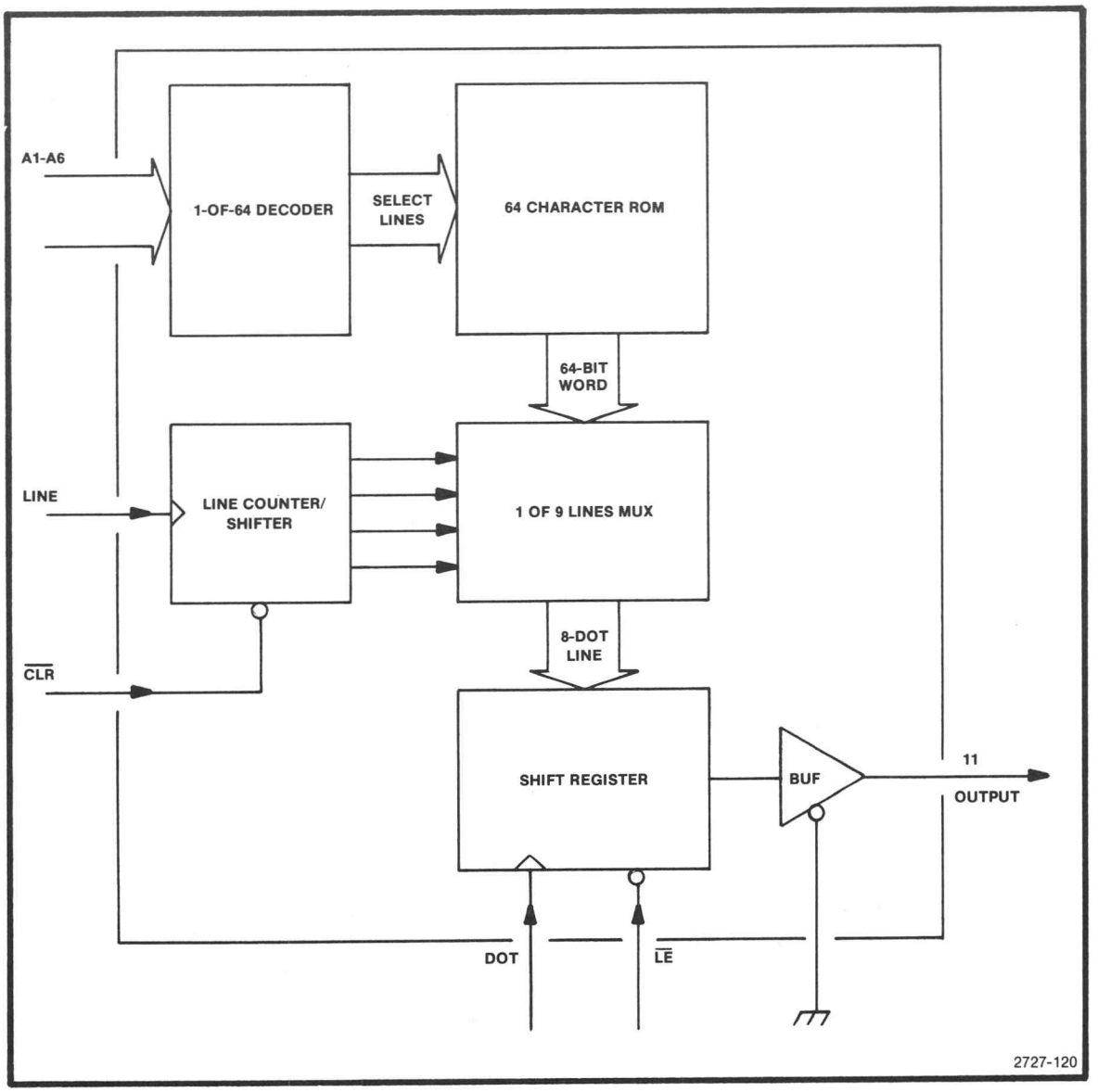

Figure 5-20. Character generator (U1028) block diagram.

Meanwhile, INC low puts the character counters on hold and disables the gate (U1022B) that clocks the character generator U1036C, the INC flip-flop, stores the low on INC at the next clock, putting a low on the dot delay shift register input.

Succeeding clocks propagate the dot through the shift register; when it emerges after three clocks, it is inverted by U1018C to reset the unblanking flip-flop and gate INC high. This sets U1036C again on the next clock. INC remains high if the value of the next dot is 0 or is gated low to repeat the dot delay cycle if the next dot is 1.

Instrument Bus Interface

The microcomputer controls the crt readout and frequency marker dot over the instrument bus through the following ports:

Port	Hex Address
Control	5F
Address/data	2F

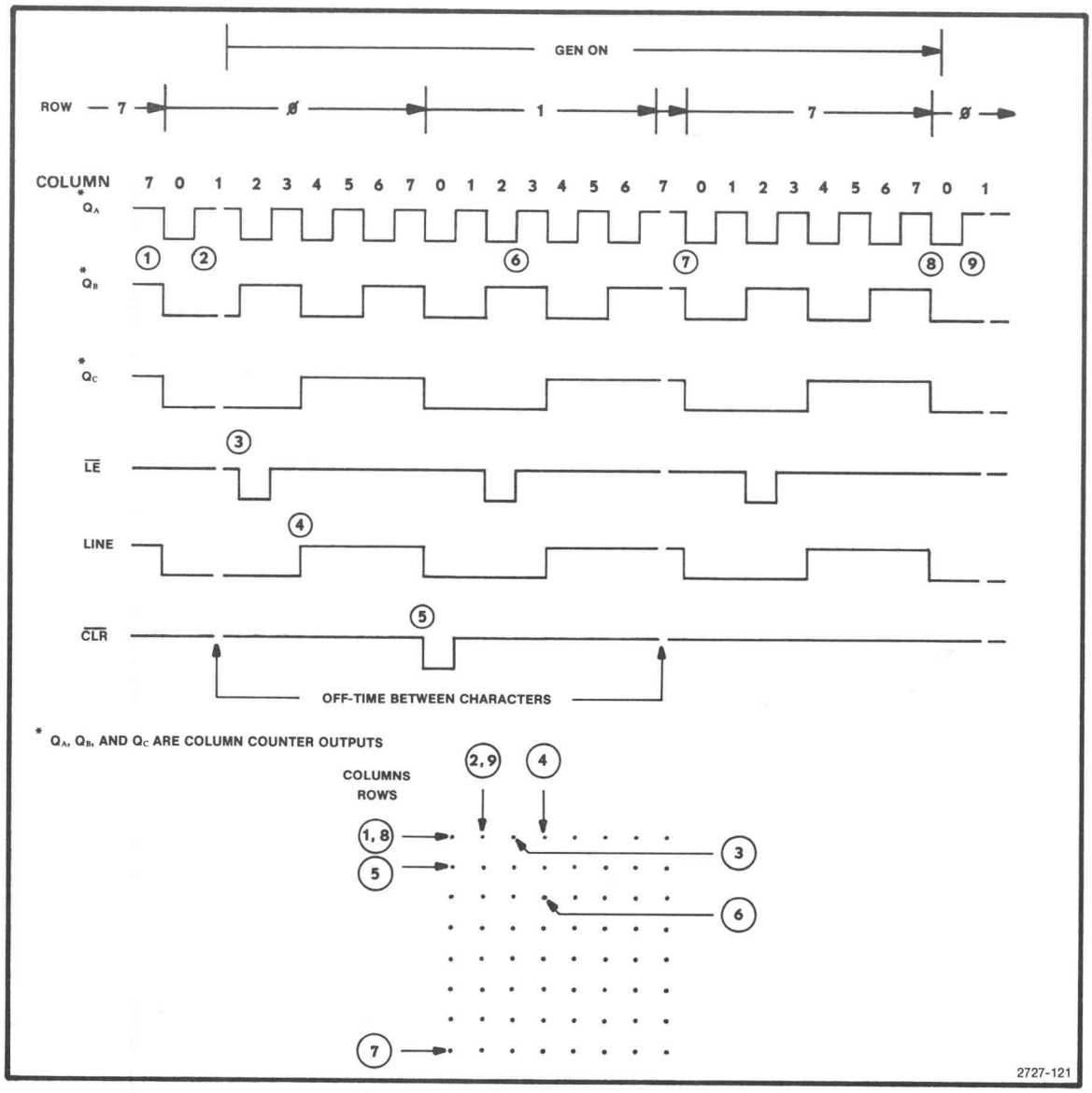

Figure 5-21. Character scan timing.

Decoder U2038 asserts CONTROL when it sees a value of 5 on the upper four bits of the instrument bus address lines and $\overline{\text{DATA}}$ when it sees a value of 2. The decoder must be enabled by GEN ON low and DATA VALID high on the instrument bus. The false transition of DATA VALID causes the addressed port to latch the data on the instrument bus.

Control Port. The control port (U2034) turns the readout on or off, steers data sent to the address/data port, and controls the mode of the frequency marker dot. The lower four bits are defined (see Table 5-9). Bits are numbered in this discussion as on the instrument bus—starting at zero. However, the D and Q pins of U2034 (and some other ICs) are numbered as on their data sheets, starting at one.

Bit 0 turns the crt readout display on (1) or off (0). When set, this bit gates the off-timer to the GEN ON flip-flop J input through U1038D, enables the INC gate (U1022C), and steers the position count onto the character RAM address inputs through multiplexer U1024. When cleared, this bit places an address, latched in U2024, on the character RAM address inputs.

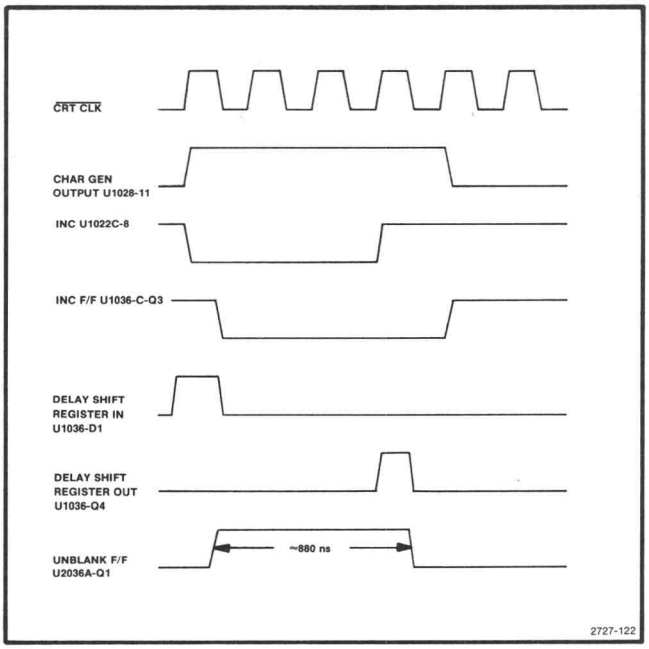

Figure 5-22. Dot delay circuit timing.

Bit 1 interprets data sent to the address/data port as an address (1) or data (0) for the character RAM. Setting this bit disables the character RAM for input and sets up the clock signal to latch the address.

When this bit is set, Q2 of U2034 gates a high on the output of U2032A. This high prevents input to the character RAM (U1026) by setting its R/$\overline{W}$ input high. This high also disconnects the instrument bus from the character RAM data inputs by disabling U2028. Meanwhile, $\overline{Q2}$ of U2034 is low, enabling U2032D to gate the clock signal that latches the address. The positive clock transition is applied to U2024 when DATA VALID goes false at the end of a write cycle to the address/data port, releasing $\overline{DATA}$.

When this bit is cleared and $\overline{DATA}$ is asserted, U2032A enables the character RAM for input and passes the data through U2028.

Bit 2 selects information from the two halves of character RAM space. When set, this bit selects page 1, the normal front-panel readout. When cleared, this bit selects page 2, a 64-character space that may be loaded with messages via the GPIB.

TABLE 5-9
CONTROL PORT

Bit	Function
0	Readout on/off
1	Address/data
2	Page 1/page 2
3	Max Span dot

Bit 3 controls the frequency dot marker. This bit is set in MAX SPAN mode to position the frequency dot with BFRD TUNE VOLTS from the first local oscillator. When cleared, this bit centers the frequency dot on the spectrum display.

Address/Data Port. The microcomputer loads characters for crt display through the address/data port. Each character requires four write cycles: 1) bit 2 in the control port is set for an address transfer; 2) the address in character RAM is sent to the address/data port; 3) bit 2 in the control port is cleared; and 4) the data is sent to the address/data port. The bits are defined in Table 5-10. Bits 0-5 are the lower six bits of the character RAM address or are the ASCII code for the character.

TABLE 5-10
ADDRESS/DATA PORT

Bit	Function
0-5	Address of ASCII code
6	Vertical shift
7	Blank

Bit 6, when set, shifts upper readout characters to the center of the crt (and lower readout characters off the bottom of the screen). This may be used with page 2 characters to give prominence to a message sent to the operator.

Bit 7 is used to reduce readout display overhead. It is set when a space is transferred to the character RAM so the readout does not steal time from the spectrum trace to scan a blank. When set, this bit prevents the GEN ON flip-flop from gating RO OFF low through U2032C.

Frequency Dot Marker

The frequency dot marker is refreshed immediately after the last character position in the lower readout is scanned. Normally, the marker is centered on the screen just below the upper readout as a pointer for the center frequency readout. When MAX SPAN is selected, however, the dot marker moves to a point on the display that corresponds to the center frequency value.

The negative transition of $\overline{TOP}$ triggers the marker generator; a simplified diagram of the circuit and its timing is shown in Figure 5-23.

U2042A delays the marker dot to allow retrace while gating FREQ $\overline{DOT}$ low to set up the display. FREQ DOT affects the readout deflection outputs in the following ways:

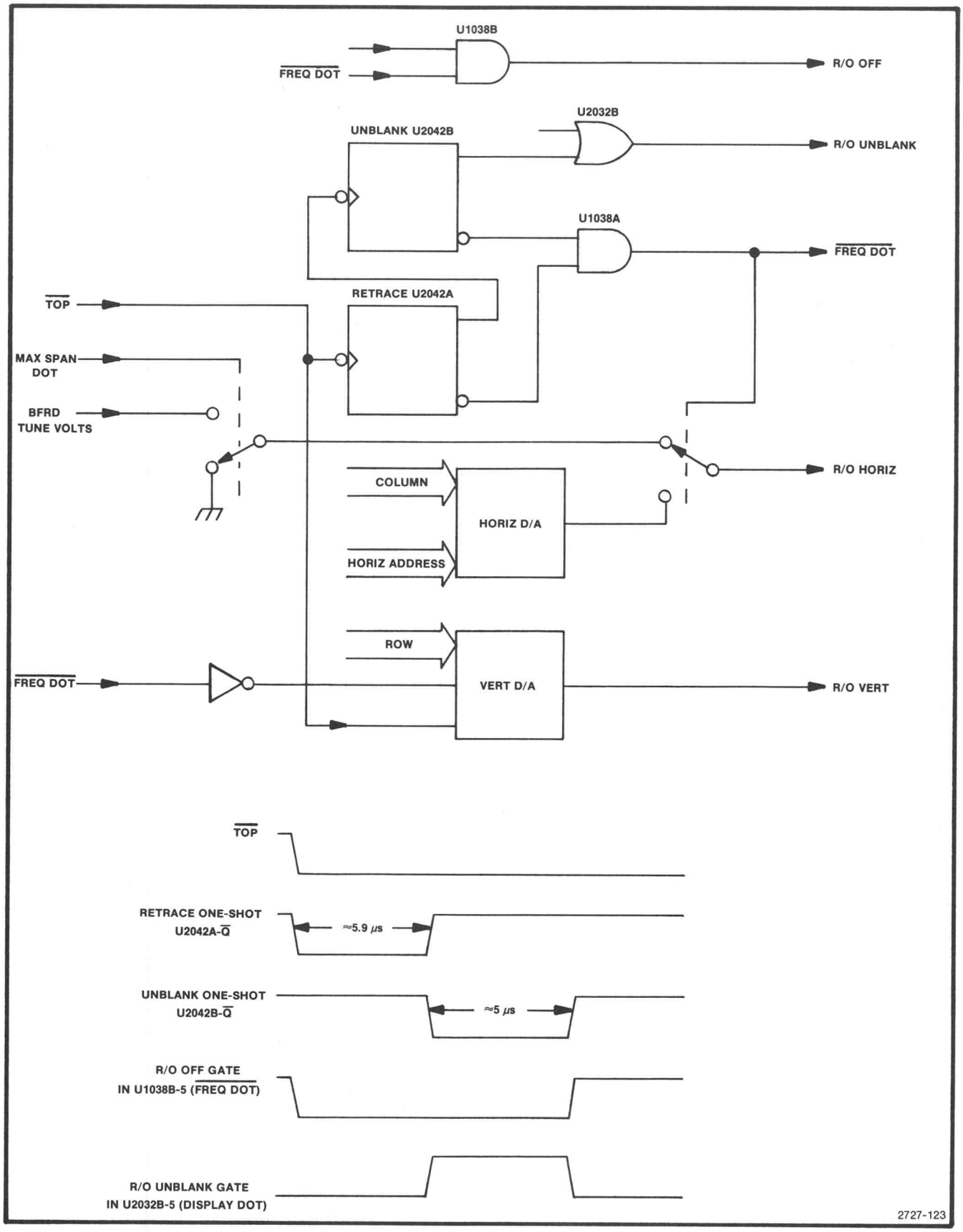

Figure 5-23. Frequency dot marker circuit and timing.

The horizontal output is connected either to ground for a center-screen dot or BFRD TUNE VOLTS for a max span pointer. TUNE VOLTS is proportional to the center-frequency readout offset from the center of the frequency range.

Bits 4 and 5 at the vertical D/A input are asserted to shift the crt beam below the upper readout (the row counter inputs are zeros).

RO OFF is gated low to switch the deflection amplifier inputs for a display using the marker dot horizontal and vertical signals.

When the retrace one-shot times out (about 5.9 microseconds), it triggers the unblanking one-shot, U2042B, which sets RO UNBLANK high for about 5 microseconds. This refreshes the dot. The corresponding low on the one-shot's inverted output holds FREQ $\overline{\text{DOT}}$ low until the dot marker is drawn. CR1041, R1041, and C1041 slow the rise on the other input of U1038A to prevent a glitch (spurious signal) on FREQ $\overline{\text{DOT}}$.

7

FREQUENCY CONTROL SECTION

The Frequency Control section performs the tuning and sweeping (scan) function for the Preselector, 1st LO (Local Oscillator), and 2nd LO. It contains the following major circuits.

Sweep. The Sweep circuit accepts trigger inputs from line, internal, and external sources in addition to the normal free-run mode of operation. It also receives external horizontal and manual sweep inputs. The circuit produces a PEN LIFT signal for chart recorder applications, a SWEEP GATE signal for crt display blanking, a SWEEP signal to drive the crt horizontal axis and digital storage circuit, plus a ramp for the Span Attenuator circuits and eventually the Preselector, 1st LO and 2nd LO.

Span Attenuator. This circuit inverts and attenuates the incoming ramp signal, as required to sweep the 1st and 2nd Local Oscillators, and the Preselector.

Center Frequency Control. The Center Frequency Control circuit provides a tuning voltage for the 1st and 2nd Local Oscillator circuits that results in a linear center frequency change as the frontpanel FREQUENCY control is changed. The circuit is directly controlled by the microcomputer, so remote control of the frequency is possible, by way of the GPIB rear-panel connector. The COARSE TUNE VOLTS signal from this circuit is applied to the 1st LO Driver circuits for summing with the SPAN signal to drive the 1st LO. The FINE TUNE VOLTS signal is applied to the Preselector Driver for summing with the IF Offset voltages, and to the Shaper and Bias circuits for summing with the 2nd LO SWEEP signal.

1st LO Driver. The 1st LO Driver performs the following: 1) Combines the COARSE TUNE VOLTS signal with the SPAN signal and produces current to drive the 1st LO. 2) Produces the tuning and sweeping signal for application to the Preselector Driver circuits. 3) Produces the mixer bias voltages. 4) Produces the BUFFERED TUNE VOLTS signal that is applied to the Display Section. 5) Produces a reference voltage that is used in both the 1st LO Driver circuit and the Preselector Driver. 6) Produces a supply voltage for the 1st LO.

Preselector Driver. The Preselector Driver is included as part of Option 1. The circuit combines the FINE TUNE VOLTS signal, the PRESELECTOR DRIVE signal, and the SPAN VOLTS signal. This combined signal is offset to compensate for the selected 1st IF then shared to drive the Preselector so it tracks with the 1st or 2nd LO. Also, the Preselector Driver drives a switch that selects either the Preselector or the Lowpass Filter, depending on the 492 operating frequency.

Shaper and Bias Circuits. The Shaper and Bias circuits, depicted on Diagram 38, are split between two systems. The bias circuits are considered to be part of the 2nd Converter System, so they are described with that system.

The Shaper circuit combines the 2nd LO SWEEP and FINE TUNE VOLTS, then shapes the resultant to produce a non-linear drive signal for the 2nd LO. Because of oscillator characteristics, this non-linear voltage provides a linear frequency change with input voltage.

SWEEP CIRCUIT 33

An overall block diagram of these circuits appears adjacent to Diagram 33. The Sweep circuit provides the ramp signal to drive the Horizontal Deflection Amplifier, the 1st Local Oscillator Driver, and the Preselector Driver (Option 1). The sweep generator also provides signals for an external plotter pen, the Z axis, and digital storage circuits.

The Sweep circuit consists of four major circuits: 1) The digital control circuits, which receive and decode the address and instructions from the microcomputer, select the sweep rate, holdoff time, trigger source, sweep mode, and control interrupts to the microcomputer. 2) The trigger circuits, which process and multiplex the three trigger signals. 3) The sweep generator, which generates the voltage ramp that drives the Deflection Amplifiers, Digital Storage, and the swept oscillators. 4) The sweep control circuits, which generate the SWEEP GATE and PEN LIFT signals, and determines the holdoff time for the sweep generator. Refer to Diagram 33 while reading the following detailed description.

Trigger Circuits

The sweep generator can be triggered from three sources: internal, external, and line signals. All three signals are converted to TTL levels by input buffer stages. Each output signal is coupled to U3034, the trigger multiplexer.

The external trigger signal (EXT TRIG/HORIZ IN) is capacitively coupled from the external trigger input connector through a compensating network to the input of the external trigger buffer and level shift circuit, which consists of differential amplifier Q2084 and buffer U1052F which converts the signal to TTL level. Diode CR2075 protects the input stage from excessive voltage.

The signal for the internal trigger circuit (VIDEO FILTER OUT) from the video filter; is applied through Q5083 coupled to differential amplifier Q5081, then converted to TTL levels by U1052D. CR4085 protects the input of Q5081 from excessive voltage.

The input line trigger signal amplitude is large enough to overdrive Q1047 producing a line trigger output of 0 to +5V peak. Diode CRI035 protects the emitter-base junction from reverse bias.

Upon instructions from U2043, the "2" side of dual trigger multiplexer U3034 selects the trigger signal for the clock input of trigger flip-flop U2034B. The flip-flop clocks on the rising edge of the applied signal, so the complement of the signal at the D input appears at the output at the first trigger after the multiplexer enable goes to a low state.

Upon instructions from U2043, the "1" side of U3034 selects either the output of U2034B or the high state at pin 6. When the multiplexer is disabled, which occurs during sweep holdoff time, the multiplexer output is low. If free run is selected, the output goes high as soon as the multiplexer is enabled. However, if the sweep is in a triggered mode, the output will not go high until the next trigger occurs. This transition restarts the sweep. When the sweep starts again, U2034B is set by sweep state flip-flop U5026A in preparation for the next sweep end-holdoff-trigger cycle.

Sweep Generator

The sweep generators consists of the timing current generator (timing resistor selector U6102, voltage regulator U4095, U6092B, and surrounding circuitry), the integrator (U4101, U5085C, Q3100, U5085A, Q3090, U5085D, Q3095, and associated components), and the reset clamp (U5085B, Q2107, and surrounding circuitry).

The timing reference voltage for the sweep circuits is set by U4095 to −10 volts. Divider R5092-R5094 sets the voltage at the non-inverting input of U4101 to −8 volts; feedback sets the inverting input at the same potential. This input is driven by the output of multiplexer U6102. Operation of the circuit is as follows: The 1 to 10V reference, from U4095, is applied to U6092B, which changes this level to −12 volts, which connects to one side of the timing resistors connected to U6102. A four volt difference then appears across the timing resistor. Multiplexer U6102 decodes instructions from U3042 (the 0F port latch), and connects only one resistor or resistor pair to its output pin, which then becomes the current source for integrator U4101. The multiplexer input codes for each of the sweep rates are listed with the description of the Digital Control circuits. Sweep accuracy adjustment R5105 is set to compensate for errors in this voltage or in the timing capacitor values. The timing capacitors are matched, so one adjustment can be used for the entire set.

The timing current furnished by the multiplexed resistors varies such that 1/I is proportional to a 2-5-10 sequence. Decade switching of sweep rates is provided by timing capacitor selection (C3079, C2094, and C2098). C2098 is used in all sweep rates, and for the 20 us to 1 ms range. When a sweep rate of 2 ms to 100 ms is selected, the output of open collector comparator U5085D goes high, causing FET Q3095 to conduct and place timing capacitor C2094 in parallel with C2098. Likewise, when a sweep rate of 200 ms to 10 s is selected, U5085A causes Q3090 to switch C3079 in shunt with the other two capacitors. (The 10 s/div sweep rate is only used in the auto-sweep routine, or in the 492P.) VR2093, R2099, CR2101, CR2102, and CR2103 clamp the output to prevent the negative sweep retrace from causing the FETs to conduct.

A voltage divider consisting of R2012, R2013, and R2017 set a switching threshold of about +7.4 volts at the input of the right-of-screen comparator U2015B. At the beginning of the sweep, the output of integrator U4101 is −8 volts. The output voltage rises linearly to +7.4 volt, then U2015B switches, placing a low at the input to U5016B. This causes the output PEN LIFT signal to move high. (This signal was low up to this point, because of the high SWP GATE signal at the beginning of the sweep cycle and the high level at the output of U2015B. The PEN LIFT signal switches before retrace occurs to give the pen time to lift.) The sweep rises in amplitude until it reaches +8 volts, causing U2015A (the end-of-sweep comparator) to switch. (The same divider that was mentioned earlier sets a switching threshhold of about +8 volts at the non-inverting input of U2015A.) The low state from U2015A is inverted by UI052A and the high output applied to U4016A sets U5026A. The high state at the Q output of U5026A is inverted by U4016B, causing the SWP GATE signal to move low, blanking the crt display. The low out of U40I6B also gates PEN LIFT high through U5016B.

The low state now at the $\overline{Q}$ output of U5026A is coupled to the holdoff circuits and the inverting input of U5085B, an open collector comparator. U5085B switches, its output rises, and Q2107 conducts. This clamps the output of the integrator to its input, and discharges the timing capacitors. Q2107 continues to conduct until a trigger is furnished to U4016C, which resets U5026A to begin the next sweep cycle.

When manual scan or external sweep is selected, both inputs to U5016D are high, which causes its output to be low. This causes the output of comparator driver U5085C to switch high and turn FET Q3100 on. As a result, feedback resistor R3105 is placed across U4101, converting it into an amplifier. Timing capacitor C2098 is still in the circuit, but its small capacitance has negligible effect at the low frequency of operation in this mode. The output of U5016C also resets U5026A and the SWP GATE remains high. These levels will remain until the output of U4101 overcomes the switching point of U2015A.

The input signals from manual scan and external horizontal are multiplexed by U6102 and applied to U4101. Since the summing node of the amplifier is not at ground, R7091 and R4093 shift the dc levels of the manual and external drive signals, respectively. U6092A is an inverting buffer for the external voltage; VR6086 is for overvoltage protection.

The sweep ramp from U4101 is applied through voltage divider R6058-R6052, which reduces the ramp voltage to U6061 to 11 volts, centered around zero volts. The output of U6061 is applied to the Digital Storage and Deflection Amplifier circuits. The extra volt of sweep amplitude is used to deflect the beam 0.5 division off screen on each side.

The sweep signal from U4101 is also applied to U6071, which amplifies the ramp to 22 volts, centered around zero. This signal drives the Span Attenuator and ultimately the 1st local oscillator.

Sweep Control

This description is based on the assumption that the sweep is in neither the manual nor the external mode. At the end of the sweep, U5026A is in set state. Its $\overline{Q}$ output is low, which causes the output of U4026C (the hold off generator) to switch high. This starts the holdoff cycle. The holdoff time between sweeps must be sufficiently long for the timing capacitors to discharge and for any transient responses in the swept circuits to die. As the sweep time increases the holdoff time is increased.

When the output of U4026C rises, the holdoff capacitors charge to +5 volts through R3027. Capacitor C1013 is always in the holdoff circuit. When U2043 latches Q4 or Q5 high, this produces a low out of U4026F or U4026E which increases hold off time by adding C3028 or C3027 into the hold off circuit. Diodes CR3034 and CR3035 protect the two inverters from reverse voltage transients that might pass through the capacitors.

When the voltage on the capacitors reaches +5 volts, the output of U2015D switches high. If single sweep has not been selected, both inputs to U3061C will now be high and its output will enable trigger multiplexer U3034. When the next sweep is ready to run (depending on the trigger selection conditions), pin 7 output of U3034 switches high. This change in state gated through U4016C, resets U5026A and begins the next sweep cycle.

When the single sweep mode has been selected, pin 2 of U5016A is high. U1071A, the single-sweep flipflop, must furnish a low to U5016A to enable U3034 to trigger a single sweep. This enabling occurs when the microcomputer clocks U1071A. When the sweep starts, U5026A resets and sets U1071A. This ensures that only one sweep occurs for each microcomputer command.

Single-sweep mode is usually selected by front-panel commands; however, in some modes, the microcomputer will command single sweep. The microcomputer can also abort a sweep and start another with the next trigger; a pulse from U5052C, through U3061B, to pin 3 of U4016A sets U5026A and causes the sweep circuit to reset.

Digital Control Circuits

As mentioned throughout this description, the sweep is controlled by latched codes and pulses. The board has two ports for receiving information from the microcomputer, addresses F and 1F. U5033 buffers the data inputs, decreasing the loading instrument bus. Address decoder U5043 decodes the address bus and strobes the data onto the board. Each output of U5043 goes to low when the corresponding port is addressed. Data is latched on the rising edge of this strobe, which is the trailing edge of Data Valid. The output of U5043 is inverted (U1052B inverts 1F; U1052C inverts 0F), then combined with the proper data bus line to form each bit of pulsed data. The pulse is at the low state for the duration of the Data Valid pulse (approximately 1 us).

TABLE 5-11
SWEEP RATE SELECTION CODES

Sweep Rate	D7	D6	D5	D4	D3
20 μs/div	1	1	0	1	1
50	1	0	1	1	1
100	1	0	0	1	1
200	0	1	0	1	1
500	0	0	1	1	1
1 ms/div	0	0	0	1	1
2	1	1	0	0	1
5	1	0	1	0	1
10	1	0	0	0	1
20	0	1	0	0	1
50	0	0	1	0	1
100	0	0	0	0	1
200	1	1	0	0	0
500	1	0	1	0	0
1 s/div	1	0	0	0	0
2	0	1	0	0	0
5	0	0	1	0	0
10	0	0	0	0	0
Manual	1	1	1	1	1
External	0	1	1	1	1

U3042 latches the data from port 0F. The combinations of D3 to D7 select the sweep rate; D3 and D4 control timing capacitor selection, and D5 to D7 control timing resistor selection. Table 5-11 lists the sweep rate selection codes. D2 is high during single sweep operations; otherwise, it is low. D0 commands a single sweep cycle.

U2043 latches the data from port 1F. Line Q6, when high, enables an interrupt to the microcomputer at the end of a sweep. This is done as follows: At rest, U2024A is reset and the low at its Q output holds U2024B in the set state. When the sweep ends (which constitutes an interrupt event), the positive edge out of inverter U1052A clocks U2024A to the set condition and the Q output of U2024A through inverter U3061A causes Q4054 to conduct, forcing SER REQ low. The microcomputer responds by setting the interrupt read line low; that is, it polls all addresses serially, which eventually places a high at AB7 and POLL simultaneously. (Fig. 5-24) This causes a high at the output of U2052A (the Q of U2024A is low, since the flipflop is now set), and saturates Q4051, pulling the D4 line low (this identifies the sweep board as the service request originator). Now, the microcomputer clocks an interrupt clear pulse to reset U2024B. This in turn, resets U2024B which sets U2024A. The circuit has returned to its reset stage.

U5052A and U5052B produce the interrupt read and clear signals. When the microprocessor wants to read or clear, it sets the POLL line high. Address bus line AB7 is high to read, resulting in a low at the output of U5052A. AB7 is low to clear, which results in a high at the output of U5052B.

SPAN ATTENUATOR 35

The Span Attenuator, under control of the microcomputer, selects the appropriate attenuation factor to apply to the incoming sweep signal, to establish the frequency span. Refer to the block diagram adjacent to Diagram 35. The Span Attenuator consists of digital

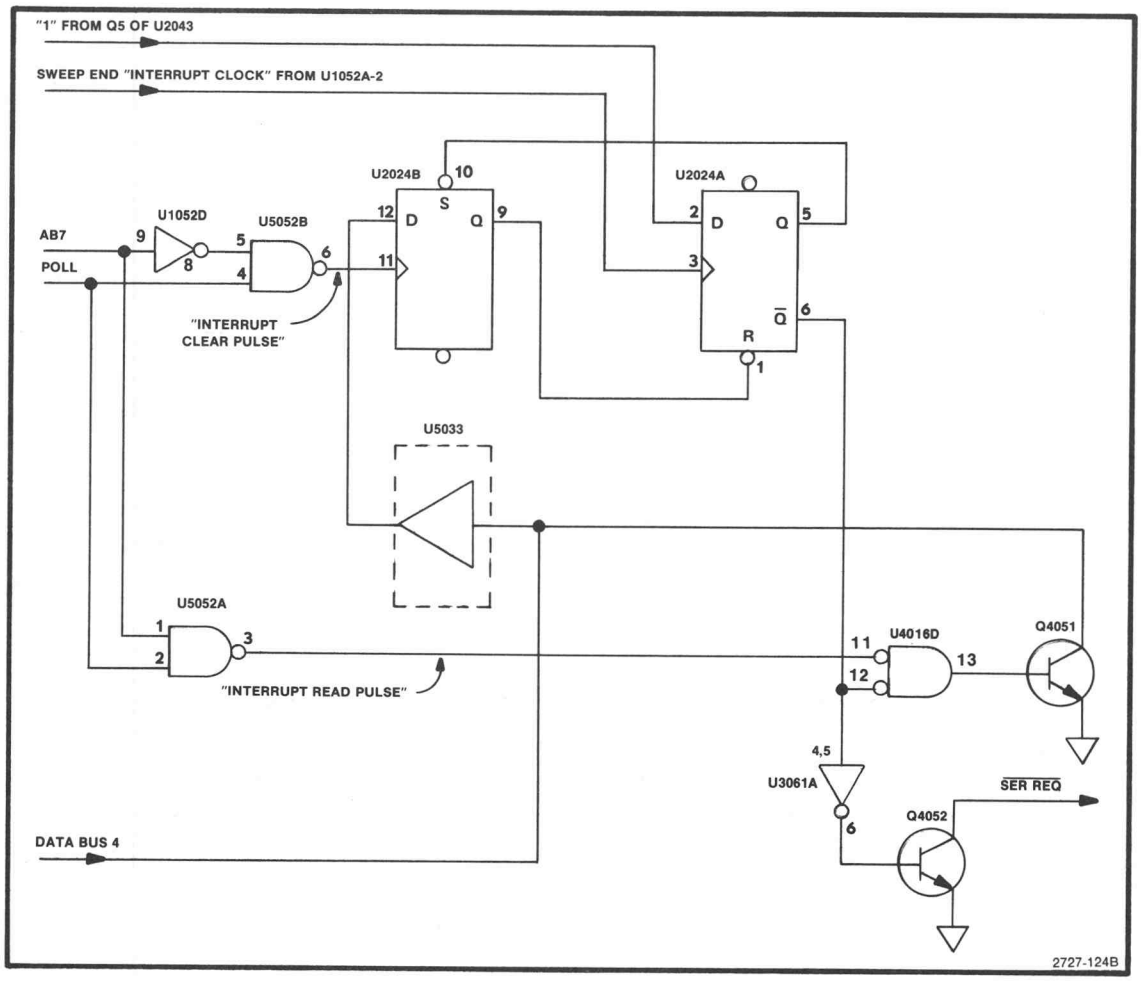

Figure 5-24. Sweep "Interrupt" circuits

control circuits, which receive and decode the address and instructions from the microcomputer; the input amplifiers, which perform noise reduction and signal inversion on the incoming sweep signal; the digital-to-analog converter, which attenuates the sweep signal to the desired amplitude for driving the 1st LO Driver and Preselector Driver circuits; and the decade attenuator, which provides three decades of attenuation for the output signals. Refer to Diagram 35 while reading this description.

Digital Control

Decoder U5025 decodes the address information from the address bus and sends a low signal to either of the two latches, U1025 (address 75) or U2015 (address 76), when a latch is addressed and the DATA VALID line moves high. (The data is stored in the latches on the trailing edge of the DATA VALID signal.) Logic buffer U4015 reduces loading of the data bus. Latch U1025 stores data that controls the eight least significant digits of the span attenuation factor. Latch U2015 stores data that controls the two most significant digits of the span attenuation factor, and other functions on the board. When a span attenuation factor is selected, the microcomputer selects an address and places the first byte of data on the bus. The DATA VALID signal causes the data to be stored in one of the two latches. Then the second address is called and the next byte is stored in the other latch. The block diagram illustrates the significance of each bit in tables near the affected circuit. A logic 1 represents the more positive of two levels or high state, and a logic 0 represents the more negative of two levels or low state.

Input Section

The sweep signal and its ground reference are applied to differential input buffer U3036. Any signals or noise induced in the two signal transmission paths are cancelled by this stage.

The following stage consists of amplifier U3032, plus switching transistors Q2025, Q2028, and Q2023. Different mixing modes require the 2nd LO frequency to either increase or decrease to increase the signal frequency. Thus, this circuit is a unity gain amplifier that can be changed from inverting to non-inverting under bus control. When line Q8 of latch U2015 is low, Q2023 conducts mode and its collector moves positive to about +5 volts. This in turn causes both Q2025 and Q2028 to conduct. Pin 3 of U3032 is effectively grounded, the sweep signal is applied through R3032 to the summing node of the amplifier, and the gain of the stage is −1. If line Q8 is high, Q2023 does not conduct and the voltage at its collector falls to nearly −15 volts. Neither Q2025 nor Q2028 are now in conduction, so the sweep signal is applied to pin 3 of U3032, and pin 2 is disconnected. Now, the gain of the stage is +1.

Digital To Analog Converter

The magnitude of the sweep signal is determined by the desired frequency span, band, and option installed in the instrument. The microcomputer calculates the proper magnitude for each combination, and sends the appropriate codes to the data latches, which in turn control the attenuation factor of the digital-to-analog converter. This stage consists of converter U1042, amplifier U2042, and a complementary pair, Q2062 and Q3056, that form the output current buffer.

Figure 5-25 illustrates a simplified two-bit digital-to-analog converter. The circuit works by current division. Since the summing node of the amplifier is at ground potential, the magnitude of the current through a resistor is not affected by the position of the switch that selects that resistor. For example, when switch S1 is at position B, the current is shunted to ground. When S1 is at position A, the current through R1 becomes part of the total output current. Thus, the output current can be zero, 1/4, 1/2, or 3/4 of the total current available. Because of the resistance ratios, the ratio of the output voltage to the input voltage equal the ratio of the output to the total current (Vout/Vin=Iout/Itotal). In this 2-bit converter, there are 2^2 or 4 output values possible. In the actual ten-bit converter, there are 2^{10} or 1024 output values ranging from zero to 1023/1024 of the input.

In converter (U1042), each internal resistance is switched in or out by a CMOS FET (internal to the device). The CMOS inputs are each protected by a series input resistor. Since the sweep signal is applied to the Vref input, U1042 serves as a digitally controlled attenuator for the sweep signal.

The attenuated sweep signal from U1042 is applied to U2042, an operational amplifier. It in turn drives an output current buffer, consisting of complementary pair Q2062-Q3056. The pair is biased to produce an output current of about 10 mA in the absence of an applied signal. This eliminates crossover distortion of the output signal. Diodes CR2051, CR2053, CR1051, and CR1049 provide temperature stabilization for the bias current in the stage. When high current is passing through the pair, diodes CR1056 and CR1061 clamp the voltage across the emitter resistors to reduce voltage drop.

Feedback for the output stage is provided by R1056, plus an internal resistor in U1042. The internal feedback resistor ensures better temperature tracking. The internal resistor provides a gain slightly less than unity; R1056 increases the stage gain and permits gain calibration, as described below.

One-of-four decoder U4025, using the data from the Q4 and Q5 lines from U2015, controls three sections of a quad FET switch, U3025. (RC circuit inputs of each FET control line, filter out noise from the digital circuits.) The code is exclusive; i.e. only one FET is switched on at a time. See Table 5-12 for a listing of the codes. When a FET is switched on, it connects a calibration adjustment potentimeter to the summing node of the operational amplifier. Adjustment R1065 sets the 1st LO tune coil sweep, R1071 sets the 1st LO FM coil sweep, and R1067 sets the 2nd LO spans.

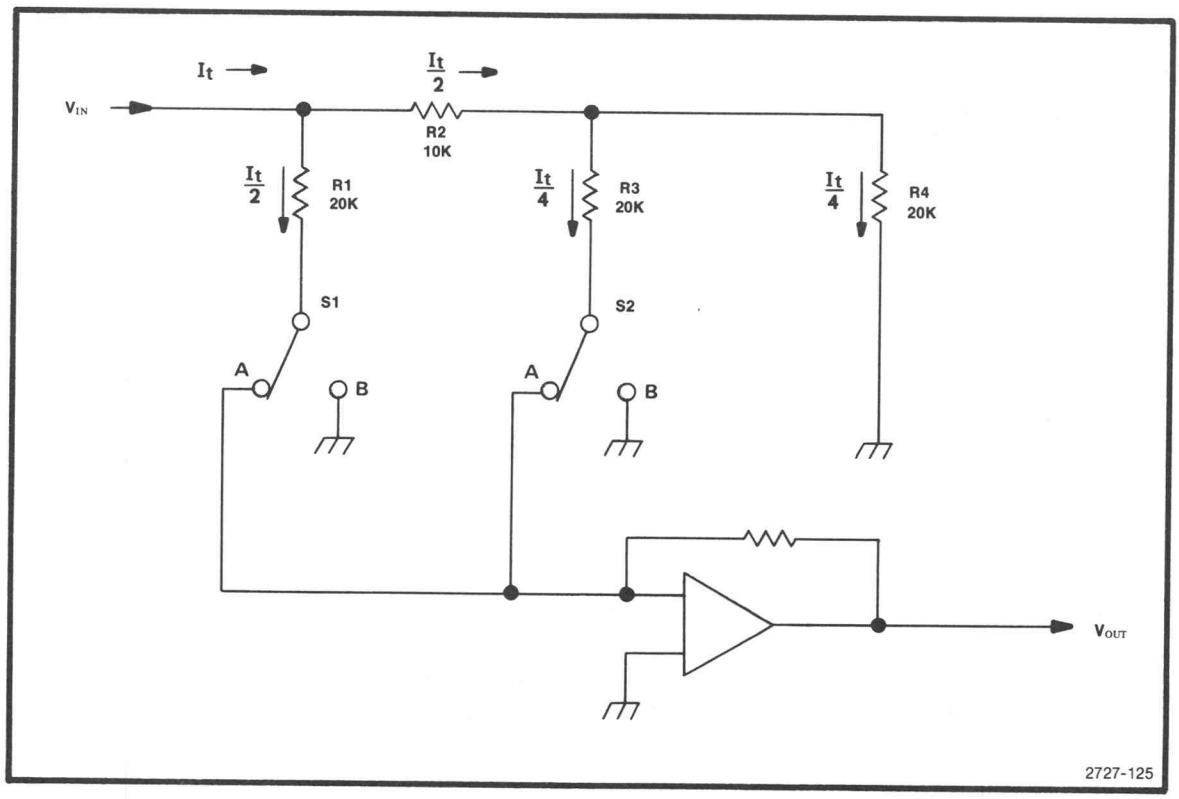

Figure 5-25. Simplified digital-to-analog converter.

TABLE 5-12
CALIBRATION CONTROL SELECTION CODES

U4025		
Pin 3	Pin 2	Selected adjustment
low	low	R1065 (main coil)
low	high	R1071 (FM coil)
high	low	R1067 (2nd LO)

The "2" side of U4025 is controlled by data on the Q6 and Q7 lines from U2015. The "2Y" outputs of U4025 are applied through buffer amplifiers in U4042 to select the appropriate attenuation factor for the output sweep. Table 5-13 lists the states required to energize the attenuation relays. A diode across each relay coil protects the driving circuit from inductive feedback transits.

Decade Attenuator

Since accuracy of the digital-to-analog converter is specified as a percentage of full scale, the accuracy decreases as the attenuation is increased. To maintain accuracy at 1 percent, it is never used at an attentuation factor of more than ten. If more attenuation is required, the decade attenuator, consisting of K4072, K3075, K3065 and the connected divider network, provides further sweep attenuation of X1, X0.1, and X0.01. See Figure 5-26 for a simplified circuit diagram.

TABLE 5-13
ATTENUATION SELECTION CODES

U2015		
Pin 15 (Q67)	Pin 16 (Q7)	Attenuation Factor
low	low	X1 (K3065)
high	low	X 0.1 (K3075)
low	high	X 0.01 (K4072)

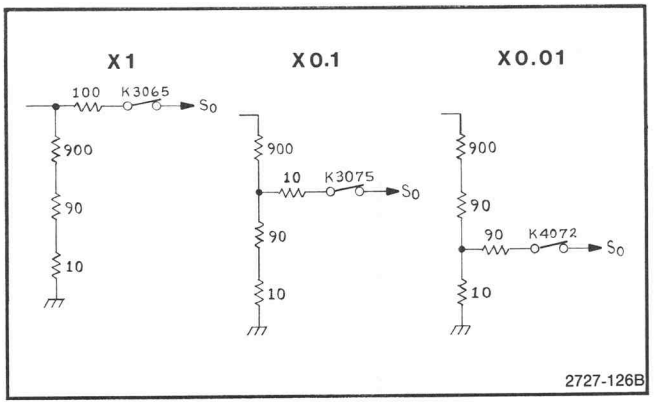

Figure 5-26. Simplified span decade attenuator.

FIRST LOCAL OSCILLATOR DRIVER 36

Refer to the block diagram adjacent to Diagram 36.

The 1st LO Driver performs the following functions: Buffers the TUNE VOLTS signal and applies it to the dot marker circuit; combines the SPAN VOLTS and TUNE VOLTS signals, and applies the combination to the Preselector Driver. The combined signal is also applied to the Oscillator Driver circuits, which drive the 1st Local Oscillator coils; selects and applies the apppropriate tune bias voltage to the 1st Mixer; controls the oscillator filter switch in the 1st LO Driver; produces a stable and precise -10 volt reference for both the 1st LO and the Preselector Driver circuits.

The major circuits and their function are as follows:

1) The digital control section buffers the incoming data from the data bus, decodes the address data, selects the required mixer bias, connects or disconnects the TUNE VOLTS and SPAN VOLTS signals for the summing amplifier, energizes the filter switch for the 1st LO, and controls the drive and filtering of the oscillator driver stage.

2) The tune volts buffer buffers the COARSE TUNE VOLTS signal from the Center Frequency Control circuits, and reduces the signal amplitude to suitably drive the dot marker circuits.

3) The oscillator filter driver furnishes drive current to the capacitor switching relay in the 1st LO.

4) The input switching circuits combine the SPAN VOLTS and COARSE TUNE VOLTS signals, and applies these signals to the summing amplifier.

5) The summing amplifier furnishes the drive signal to the oscillator driver. The summing amplifier sums the SPAN VOLTS ramp signal from the span attenuator with the coarse tune voltage from the Center Frequency Control circuits. In less than maximum span, a sweep voltage of ± 10 volts sweeps the oscillator at a rate of 333 MHz/division. As the TUNE VOLTS signal varies from -10 to +10 volts, the oscillator's center frequency is moved over its full range of 2.072 to 6.35 GHz, plus about 50 MHz overtune at each end.

6) The oscillator driver furnishes swept current drive to the 1st LO coil.

7) The reference supply, which produces a precise -10 volt reference for the Preselector Driver and 1st LO Driver.

8) The mixer bias driver produces the required bias voltages for the 1st Mixer in the IF stages.

The following description is in two parts; the first description applies to 670-5551-03 boards, the second applies to 1st LO Drive boards 670-5551-00 through 670-5551-02. Refer to Diagram 36 or 36A while reading the following descriptions.

Digital Control (670-5551-03 and later)

The digital control circuit sets the oscillator span volts, the 1st mixer bias and programmable bias for the 492P Decoder U4034 output Y1 (pin 14) goes low when input address is 72 and output Y7 goes low for address 7E. When either of these outputs go high, data is clocked or latched into U4017, U4024, and U4022. Data for U4017 consists of control codes for the oscillator drive circuits and switch U1016 which selects, 1st mixer bias for the 3.0 to 21 GHz bands, and the bias set by the front panel PEAKING control. Tne codes are described where each applies to the description and in Table 5-14. Data for DAC U3022 is converted to an analog signal which provides the Programmable Bias for the 492P. The resistance between output terminals 16,2,and 15 of U3022 is the input resistance for operational amplifier U2018 and R2022 is the feedback resistance.

Tune Volts Buffer. The tune volts buffer consists of amplifier U1025B and surrounding components. The COARSE TUNE VOLTS signal from the Center Frequency Control circuits is reduced to approximately 25% of its amplitude by divider R1028-R1027. The reduced voltage is applied to U1025B,which is configured as a voltage follower with a gain of +1. The output is then fed to the Dot marker stage in the Crt Readout circuits.

Input Switching. This stage consists of FET Q2033, comparators U3014A and U3014C,and FET Q2026. When maximum span is selected, line Q8 of U4017 goes low, causing U3014C to switch. This in turn causes Q2026 to conduct and place R2030 in parallel with R2031, increasing the stage gain of U2032. Also, the same low state is applied to the input of U3014A, which switches and cuts off Q2033. This action disconnects the

TABLE 5-14

U4017 (U3027) OUTPUT LINES

Low	High
Q1 Bias 1 connected	Bias 1 disconnected
Q2 Bias 2 connected	Bias 2 disconnected
Q3 Bias 3 connected	Bias 3 disconnected
Q4 PEAKING connected	PEAKING disconnected
Q5 Output Filter disconnected	Output filter connected
Q6 Driver Input connected	Driver input disconnected
Q7 SPAN VOLTS disconnected	SPAN VOLTS connected
Q8 Maximum span; TUNE VOLTS disconnected	Normal span; TUNE VOLTS connected

TUNE VOLTS signal from the amplifier; the TUNE VOLTS is then used only to position a marker on the display. With only the span voltage connected, however, the oscillator is still able to sweep over its full frequency range. The center frequency is equal to the center of the range, which is 4.211 GHz.

If the main coil is not to be swept, line Q7 of U4017 goes low, which cuts off Q3028 and de-energizes K2028. This removes the SPAN VOLTS signal from the amplifier. Diode CR3031 protects Q3028 from the inductive feedback surges that occurs at turn-off.

Oscillator Filter Driver. This circuit consists of Q2029 and related components. When relay K2028 is de-energized, as just described, Q2029 conducts. This stage drives a capacitor-switching relay on the first local oscillator interface board. The capacitors are switched across the main coil whenever it is not being swept, to filter noise from the tuning current. Capacitor C2025 maintains current through the relay after power is turned off, until the coil current has decayed.

Summing Amplifier. This operational amplifier circuit consists of amplifier U2032, complementary pair Q2035-Q2039, and related components. The feedback resistance for this circuit is R1038. The input resistance is R2027 for the COARSE TUNE VOLTS input and R2031 for the SPAN VOLTS input. (R2030 is switched across R2031, as mentioned earlier, to increase stage gain for maximum span operation.) The output of the summing amplifier, which swings from −10 volts to +10 volts, is applied to the Preselector Driver circuits and to the Video Processor. It is also fed through R1031, the 1st LO SENSE adjustment, summed with the offset voltage from R1032 (1st LO OFFSET), then applied to the source of Q2040. Adjustments R1031 and R1032 match the oscillator driver stage to the oscillator characteristics. R1032 adds offset to the output of U2032 to place the oscillator at center operating frequency when the output of U2032 is at zero volts. R1031 matches the sensitivity of the oscillator to the output amplitude from Q2039/Q2035.

FET Q2040 is used to disconnect the signal from the driver stage. In order to degauss the oscillator coil, (thus establishing a known magnetic history), the microcomputer causes line Q6 of U4017 to go high for about 200 ms. The output of comparator U3014D goes low, cutting off Q2040. This removes all drive from the oscillator coil until the Q6 line returns low.

Oscillator Driver. The oscillator driver stage consists of operational amplifier U2043/Q3047 and surrounding components. It converts its voltage input into the current drive required by the oscillator main tuning coil.

Preamplifier stage Q2045, which receives the signal from operational amplifier U2032,Q2039/Q2035 through Q2040, is a low-noise matched dual transistor. Q2045 is part of the input circuit of a feedback amplifier containing U2043,Q3047, and driver transistor Q352. The feedback path through R3040 and R2042 sets the voltage across a four terminal resistor R1040. This voltage in turn sets the current of the resistor which is also emitter current for driver transistor Q352 and the oscillator coil current 1st LO Sense adjustment R1031, sets the voltage gain of the amplifier which changes the current drive to the oscillator coil.

Capacitor C3038 filters noise on the tune volts and voltage reference inputs. Because of its effect on tuning speed, the capacitor is in the circuit only in the phase-locked mode with phase lock switched off, or when the phase lock option is not included in the instrument. Normally Q5 of U4017 is low,which through U3014B,causes Q3042 to cut off.

Reference Supply. Operational amplifier U2052 and surrounding circuitry form the −10 volt reference supply. One side of preamplifier Q2052, biased by R1055 and VR1051, sets a reference voltage at the inverting input of U2052. The output voltage is set by R1034, the −10 volt adjustment. U2052 senses changes in load that are amplified by Q2052, and changes the current through regulator transistor Q2051. The diode network across the base-emitter junction, limits the collector current to about 23 mA, protecting the transistor from damage.

Mixer Bias Driver. The mixer bias driver circuit, which consists of quad FET switch U1016, amplifier U1025A, and buffer Q2025/Q1028, plus associated circuitry, furnishes the required bias current (up to 20 mA) to the 1st Mixer circuit. The bias voltage varies from +1 volts to -1 volts for the internal mixer, and from +1 volt to -2.25 volts for an external mixer.

Regulator U1013/U1018, provide regulated +12V and -12V across the three bias adjustment potentiometers, R1029, R1026, and R1022. The voltage at the center arm of one of these potentiometers or the output of U2018, which represents the front panel PEAKING control setting,or programmable bias is selected by quad FET switch U1016 and applied to the input of U1025A. Quad FET U1016 is controlled by Q1 through Q4 lines from data latch Q4017. A low at any one of these outputs causes the associated FET to conduct and connect that line to the input of U1025A. U1025A drives a pair of transistors Q1028/Q2025, connected as complementary pair to provide the 1st mixer bias voltage.

Programmable Bias. When the microcomputer sends address 7E to decoder U4034, pin 7 (output Y7) goes low. At the end of data output cycle, data is clocked into either U4024 or U4022, depending on which latch is enabled by DB6 or DB7. This data is then converted to an analog current by U3022 which is the current source for operational amplifier U2018. The output of U2018 is a bias voltage that is fed to either the Pre-selector Driver board where it is summed with the drive voltage for the preselector;or,it is fed through U1016,U1025A, and Q1025/Q2025 to the 829 MHz Diplexer,then through RF circuitry to the 1st mixer or external mixer port.

Oscillator Collector Supply. This circuit comprises amplifier U4055, buffer Q3049, and surrounding circuitry. U4055 holds Q3049 in saturation, so the collector of the transistor remains at a fraction of a volt below +15 volts. This voltage is applied to the 1st LO circuits.

Digital Control (670-5551-00 through 02)

The digital control circuits consist of address decoder U3033 and data latch U3027. When the microcomputer specifies the address of this board (which is 72), pin 14 of U3033 goes low. At the end of the data output cycle, pin 14 goes high, and the data on the input lines is latched into U3027. This data consists of control codes for the circuits on the remainder of the board. The codes are described wherever each applies to the description, and in Table 5-14.

Tune Volts Buffer. The tune volts buffer consists of amplifier U1028B and surrounding components. The COARSE TUNE VOLTS signal from the Center Frequency Control circuits is reduced to approximately 25% of its amplitude by divider R1016-R1015. The reduced voltage is applied to U1028B, which is configured as a voltage follower with a gain of +1. The output is then fed to the Dot marker stage in the Crt Readout circuits.

Input Switching. This stage consists of FET Q2015, comparators U4018A and U4018C, and FET Q2026. When maximum span is selected, line Q8 of U3027 goes low, causing U4018C to switch. This in turn causes Q2026 to conduct and place R2026 in parallel with R2027, increasing the stage gain of U2018. Also, the same low state is applied to the input of U4018A, which switches and cuts off Q2015. This action disconnects the TUNE VOLTS signal from the amplifier; the TUNE VOLTS is then used only to position a marker on the display. With only the span voltage connected, however, the oscillator is still able to sweep over its full frequency range. The center frequency is equal to the center of the range, which is 4.211 GHz.

If the main coil is not to be swept, line Q7 of U3027 goes low, which cuts off Q4032 and de-energizes K2028. This removes the SPAN VOLTS signal from the amplifier. Diode CR2026 protects Q4032 from the inductive feedback surges that occurs at turn-off.

Oscillator Filter Driver. This circuit consists of Q4023 and related components. When relay K2028 is de-energized, as just described, Q4023 conducts. This stage drives a capacitor-switching relay on the first local oscillator interface board. The capacitors are switched across the main coil whenever it is not being swept, to filter noise from the tuning current. Capacitor C3023 maintains current through the relay after power is turned off, until the coil current has decayed.

Summing Amplifier. This circuit consists of amplifier U2018, complementary pair Q3015-Q3018, and related components. The components form an operational amplifier. The feedback resistance for this circuit is R3016. The input resistance is R2013 for the COARSE TUNE VOLTS input and R2027 for the SPAN VOLTS input. (R2026 is switched across R2027, as mentioned earlier, to increase stage gain for maximum span operation.) The output of the summing amplifier, which swings from -10 volts to +10 volts, is applied to the Preselector Driver circuits and to the Video Processor. It is also fed through R1034, the 1st LO SENSE adjustment, summed with the offset voltage from R1036 (1st LO OFFSET), then applied to the source of Q2035. Adjustments R1034 and R1036 match the oscillator driver stage to the oscillator characteristics. R1036 adds offset to the output of U2018 to place the oscillator at center operating frequency when the output of U2018 is at zero volts. R1034 matches the sensitivity of the oscillator to the output amplitude from U2018.

FET Q2035 is used to disconnect the signal from the driver stage. In order to degauss the oscillator coil, (thus establishing a known magnetic history), the microcomputer causes line Q6 of U3027 to go high for about 200 ms. The output of comparator U4018D goes low, cutting off Q2035. This removes all drive from the oscillator coil until the Q6 line returns low.

Oscillator Driver. The oscillator driver stage consists of operational amplifier U2040 and surrounding components. It converts its voltage input into the current drive required by the main tuning coil.

Preamplifier stage Q2045, which receives the signal from Q2035, is a low-noise, matched dual transistor. The gain of the stage ensures that most of the input noise of U2040 will be masked. Further filtering is performed by C3032. The main purpose of the capacitor is to filter noise on the tune volts and voltage reference inputs. Because of its effect on tuning speed, the capacitor is in the circuit only when the instrument could be operating in a phase-locked mode, but is not. (This case occurs when the phase-lock is turned off, or the phase-lock option is not included in the instrument.) Normally, Q5 of U3027 is low, which, through U4018B, causes Q3035 to cut off.

The main driver transistor is Q3052. In order that no current will flow from the operational amplifier to Q3052, source follower Q2055 isolates the two. Four-terminal resistor R1040 is used to develop the feedback voltage for U2040. Two leads sense the voltage, and the other two carry the current for the oscillator coil.

Reference Supply. Operational amplifier U2047 and surrounding circuitry form the −10 volt reference supply. One side of preamplifier Q2049, biased by R1055 and VR1056, sets a reference voltage at the inverting input of U2047. The output voltage is set by R1037, the −10 volt adjustment. U2047 senses changes in load that are amplified by Q2049, and changes the current through regulator transistor Q1053. The diode network across the base-emitter junction of Q1053 limits the collector current to about 23 mA, protecting the transistor from damage.

Mixer Bias Driver. The mixer bias driver circuit, which consists of quad FET switch U2026, amplifier U1028A, and buffer Q2025, plus associated circuitry, furnishes the required bias current (up to 20 mA) to the 1st Mixer circuit. The bias voltage varies from +0.4 volts to −1.4 volts for the internal mixer, and from +1 volt to −2 volts for an external mixer.

Regulator U3045 drops the voltage from the +9 volt supply to a noisefree +5-volt regulated source for the circuit. The voltage is applied to the three bias adjustment potentiometers, R1013, R2015, and R2017. Current through one of these, or through the junction of R1014 and R1018 (which represents the front-panel PEAKING adjustment), is selected by U2026 to be applied to U1028A. Quad FET U2026 is controlled by the Q1 through Q4 lines from data latch Q3027. A low at any one of these outputs causes the associated FET to conduct and connect that current to the input of U1028A, through to the output of Q2025, then to the mixer circuits as the mixer bias voltage.

Oscillator Collector Supply. This circuit comprises amplifier U4055, buffer Q3058, and surrounding circuitry. U4055 holds Q3058 in saturation, so the collector of the transistor remains at a fraction of a volt below +15 volts. This voltage is applied to the 1st LO circuits.

PRESELECTOR DRIVER 37

The Preselector circuits, part of Option 1, provide input selectivity that reduces spurious responses between 1.7 and 21 GHz. Refer to the block diagram adjacent to Diagram 37. The Preselector Driver furnishes the drive current that operates the Preselector Coil, depicted on Diagram 12. It also furnishes a voltage proportional to frequency through the rear-panel ACCESSORIES connector for an external unit. The circuit also drives the relay that selects the preselector or low-pass filter. The Preselector Driver consists of the following major circuits:

1. The digital control circuits, which store and decode the data from the microcomputer and control the other parts of the Preselector Driver. The digital control circuits applies the SPAN VOLTS signal to the oscillator voltage processor when FM coil spans are selected; selects the gain of the oscillator voltage processor; turns off the drive signal to the current driver for degauss cycles or when the preselector is not in use; selects the IF offset voltages to be combined with the FINE TUNE VOLTS signal; adds noise filtering at the driver output when the preselector is not being swept; and controls the filter select switch.

2. The oscillator voltage processor, which attenuates and offsets the input signal for application to the summing amplifier.

3. The IF Offset stage, which applies an offset voltage to the summing amplifier that is proportional to the IF frequency in use, and to the fine tuning frequency changes of the 2nd Local Oscillator.

4. The summing amplifier, which combines the effective oscillator frequency voltage and the IF Offset voltage, and drives the tracking adjustment circuits.

5. The tracking adjustment circuits, which compensate for different preselector sensitivities, compensates for IF offset and any preselector offset, and compensates for non-linear operation caused by magnetic saturation of the Preselector.

6. The final driver stage, which changes the applied voltage signal into a current drive signal for the preselector coil.

7. The preselector switch driver, which drives the filter select switch, depicted on Diagram 12. The switch requires a positive pulse to select the low-pass filter and a negative pulse to select the Preselector. Refer to Diagram 37 while reading the following description.

Digital Control Circuits

The microcomputer interface circuits, which exercise digital control of the preselector driver circuits, consist of address decoder U5036 and latch U5031. Both the write address, 77, and the read address, F7, are decoded by U5036.

U5031 latches the eight bits of data from the microcomputer on the trailing edge of the DATA VALID signal. This event coincides with the rising edge of the pulse on pin 3 of U5036. Table 5-15 lists output lines from U5031.

The read address function is used by the microcomputer to determine if the instrument is equipped with Option 1. When address F7 is specified, the Y7 line of U5036 goes low. This pulls data line D4 low, informing the microcomputer of the option status.

Oscillator Voltage Processor

The oscillator voltage processor consists of U1101A, U2028, and related components. The signal from the 1st LO Driver is applied to the voltage divider and scaling network formed by R1022, R1021, R1024, and R1031. The purpose of the network is to attenuate and offset the input signal as follows: The input voltage is ±10 volts, centered about zero, which corresponds to an oscillator frequency of 2.072 to 6.35 GHz. This voltage is the summation of the sweep and tune voltages, with appropriate scaling. The output of the voltage processor is about -1 volt at 2.072 GHz to about -3 volts at 6.35 GHz, which corresponds to a scale factor of 2.1 GHz/volt. The voltage is directly proportional to frequency; thus the offset is such that if the oscillator could operate to 0 Hz, the voltage processor output would be at zero volts at the same time.

Since the preselector drive input is not swept by the 1st LO Driver when FM Coil spans are used, the sweep must be summed in by this stage. Line Q4 of U5031 moves low when FM coil spans are selected; this causes Q1011 to conduct, which in turn causes Q1022 to conduct. The span volts signal is connected to the inverting input of U1011A, where it is inverted, then applied to the input of U2028.

U2028, as directed by the microcomputer, multiplies the input signal by one or three to transform the input signal to represent effective oscillator frequency in bands 4 and 5 when the 3rd harmonic of the LO is used. When the Q1 line of U5031 is low, the output of one section of quad comparator U5022 is also low, holding FET Q2024 cut off. U2028 is now a unity-gain, non-inverting amplifier. However, when the Q1 line moves high, Q2024 turns on, connecting a resistive network across the amplifier to increase gain by a factor of three. X3 Gain adjustment R1052 sets the gain for precisely three times unity in the tripler mode.

IF Offset Section

The -10 volt reference supply, depicted on Diagram 36, furnishes the precise reference voltage for the IF offset circuits. Since the offset voltage is proportional to the IF minus 2.072 GHz, no offset is required for the +2.072 GHz IF. FET Q2034 adds the +829 MHz network into the circuit and Q2036 adds the -829 MHz network. Lines Q7 and Q8 control the two switches by way of quad comparator U5022. One or the other, but not both transistors can be switched on at once; the offset voltage is applied to the inverting input of U2045. At the output of this amplifier, -9 volts corresponds to (-829)-2072 MHz, which equals -2901 MHz.

The FINE TUNE VOLTS signal from the Center Frequency Control circuits, which is used to tune the 2nd local oscillator, is applied to the input of U2047. Since it is applied here, this makes the fine tune voltage independent of the voltage tripling action in the voltage processor section. The tuning voltage is also applied to the input networks of U2045. Thus, by varying the magnitude of signal in the inverting path compared to the direct path, the proper magnitude and polarity of fine tune offset for each IF offset is provided in the preselector drive signal. Table 5-16 lists the offset voltage required for each frequency band.

Summing Amplifier

The effective oscillator frequency voltage from U2028 and the offset IF voltage from U2045 are applied to the inverting input of U2047. This stage drives the tracking adjustments stage and furnishes a signal for external preselector drive circuits as well. The external drive line has its own return to reduce ground loops.

TABLE 5-15
U5031 OUTPUT LINES

	High	Low
Q1	Selects X1 gain for U2028.	Selects X3 gain for U2028.
Q2	Not used.	Not used.
Q3	Connects tracking adjustment outout to final driver stage.	Disconnects tracking adjustment output from final driver stage.
Q4	Connects SPAN VOLTS signal to U1011A input for FM coil spans.	Disconnects SPAN VOLTS from U1011A.
Q5	Selects Low-Pass Filter.	Selects Preselector
Q6	Disconnects output filtering.	Adds output filtering.
Q7	Connects -829 MHz offset.	Disconnects -829 MHz offset.
Q8	Connects +829 MHz offset.	Disconnects +829 MHz offset.

TABLE 5-16
PRESELECTOR FREQUENCY BANDS

Band	Frequency Range	IF	Harmonic	Approximate Voltage Offset
2	1.7—5.5 GHz	-829 MHz	1st	9.0 volts
3	3.0—7.1 GHz	+829 MHz	1st	3.9 volts
4	5.4—18.0 GHz	-829 MHz	3rd	9.0 volts
5	15.0—21.0 GHz	+2.072 GHz	3rd	0 volt

Tracking Adjustments

These circuits consists of gain-setting offset and shaping circuits. R1065 (PRE-SEL SENSE) is used to compensate for sensitivity variations between preselectors stages. R1064 (PRE-SEL OFFSET) is used to compensate for the offset introduced in previous circuits and for any offset in the preselector. This adjustment sets the preselector frequency to 2072 MHz when the output of U2047 is at zero volts.

The four other adjustments (R1054, R1056, R1061, and R1063), are part of a shaper network. The network compensates for magnetic saturation in the preselector, which would cause a deviation from linearity at frequencies above 14 GHz. Each shaper network is switched in by a resistive divider that, at a given frequency, forward-biases the diode in the shaper to shape the current output. Thus, the diodes compensate for the non-linear action of the YIG tuning.

The front panel PEAKING control applies a small offset through R5065 to the input of the current driver stage. This corrects for non-linearity or temperature drift in the 1st LO or Preselector.

Current Driver

This stage consists of output stage Q5065-Q5052; FETs Q3061, Q3077, and Q2074; MOSFET Q3032; amplifiers U2054 and U3054; and transistors Q2026, and Q4037.

FET Q2074, as controlled by the Q3 line of U5031, is turned off to reduce the coil current to zero when the preselector is not in use, or during a degauss cycle. During normal operation, the transistor is conducting.

Preamplifier U2054 reduces the temperature drift of the output stage. Driver offset adjustment R2066 nulls the offset voltage, at which point the temperature drift is least. U2054 drives U3054, the main operational amplifier. FET Q3061 isolates U3054 from the output driver.

Current amplifier Q5052 drives the main preselector driver transistor, Q5065. The stage is biased so current flow divides with most of the current going through the output transistor, and a small portion flows through the bias circuits. The currents rejoin at the preselector coil. Resistor R4049 has four terminals; one set carries the coil current, the other set senses the voltage and thus the coil current.

When the preselector is not being swept, line Q6 is low, which causes Q4037 to conduct. This causes Q3077 to conduct, placing C4071 across the Pre-selector coil. The capacitor reduces noise at the output. The capacitor also changes the frequency response of the stage so at the time the filter is added, Q2026 conducts, forward biasing Q3032, which shorts out R3048 to change the compensation of U3054. This ensures that the stage remains stable.

Preselector Switch Driver

Operational amplifier U1011B and the complementary pair of transistors Q4025-Q3025, form the preselector switch driver. This circuit drives the latching relay that is depicted on diagram 12. This relay requires a positive pulse to select the low-pass filter, and a negative pulse to select the preselector.

When the Q5 line of U5031 goes high, a positive pulse of about 100 ms in duration, generated through RC network C3021-R3021, appears at the input of U1011B. The output of the operational amplifier drops to about −12 volts, and a positive pulse is passed through the transistor pair, selecting the low-pass filter. When the Q6 line goes low, a negative pulse of the same duration is passed to U1011B. The amplifier output rises to about +12 volts, and a negative pulse is passed through the transistor pair to select the preselector.

When the circuit is quiescent, neither Q3025 nor Q4025 conduct, since the sum of the zener voltages of VR3011 and VR3012 is greater than the combined supply voltages. When the output of the operational amplifier comes near one of the supply voltages, the transistor that is connected to the other supply becomes saturated, furnishing the necessary drive current to the relay coil. CR4012 and CR4013 protect the driver transistors from induced voltage surges; C3028 and R3028 dampen any oscillation that might occur in the coil circuit.

SWEEP SHAPER AND BIAS CIRCUITS 38

Refer to the block diagram adjacent to Diagram 38. The circuit fundamentally consists of a positive and negative bias supply and a non-linear amplifier that drives the Cavity 2nd LO. The bias circuits supply the oscillator with stable, re-regulated voltages to minimize oscillator FM'ing. The shaper amplifier and diode-resistor arrays combine the FINE TUNE VOLTS and 2nd LO SWEEP signals to form a non-linear driver signal to control the oscillator frequency. The Cavity Oscillator generates the 2182 MHz signal that is used in the 2nd Converter circuits. Refer to Diagram 38 while reading the following description.

Bias Supplies

+12 Volt Regulator. U2047 is a reference Zener diode that furnishes a precise, low-noise temperature stabilized, reference of +6.95 volts to the +12 volt, −12 volt,and +90 volt supplies. This voltage is applied through a filter network to the non-inverting input of amplifier U3051, which drives series-pass regulator transistor Q2065. Changes in the output voltage at the emitter of this stage are coupled back to the inverting input of U3051, amplified, and used to restore the output to the original value.

−12 Volt Regulator. Except for the components and the polarity, the the plus and minus 12 volt supplies operate the same. Refer to the above description for information regarding −12 volt supply operation.

+7.7 Volt "C" Regulator. This circuit consists of emitter follower Q3035 and related circuitry. It furnishes a regulated +7.7 volts to the Cavity Oscillator. This voltage is derived from the regulated +12 volts. The operating bias for Q3035 is set by the voltage divider in the base circuit, which fixes the emitter voltage at +7.7 volts.

−8.2 Volt "E" Supply. This circuit consists of comparator U3025, emitter followers Q4026 and Q4024, and surrounding circuitry. Part of the function of this circuit is to ensure that the "C" supply voltage is applied to the Cavity Oscillator first, before the "E" supply. This makes sure that the Cavity Oscillator is excited into oscillation at turn-on.

When the analyzer is turned on, the output of U3025 is clamped at approximately +14 volts, because the "C" supply voltage is less than the +6.95 volt reference. The base of Q4024 is at about +0.7 volts so the transistor is cut off, and the oscillator receives no current from Q4024. When the "C" supply voltage rises past the +6.95 applied at pin 3 of U3025, the comparator switches and its output drops to approximately −14 volts. This cuts off Q4026, Q4024 is biased on, and the Cavity Oscillator can begin operation.

+90 Volt Supply. The principal components of this circuit are amplifier U1087 and transistor Q1076. The circuit takes the +100 volt supply output, filters and re-regulates it, producing a stable +90 volts for the shaper amplifier. The +6.95 volt reference is applied to the non-inverting input of U1087. This is compared to a sample of the output, which is derived through divider R2087-R1086. The regulated +90 volts is taken off the emitter of series-pass transistor Q1076.

Shaper Amplifier

This stage consists of amplifier U3089, amplifier U1010, transistors Q1030 and Q2024, and related circuitry. The FINE TUNE VOLTS signal and 2nd LO SWEEP signal are combined by U3089, converting the dual differential inputs to a single-ended input for the next stage. The combined signal is applied to the non-inverting input of U1010, amplified, then applied to the base of Q1030 for further amplification. The collector of Q1010 drives the base of emitter-follower Q2024, which in turn provides the tune voltage to the cavity oscillator, tuning or sweeping the unit, as appropriate. Feedback for the shaper amplifier stage is provided through R2018, R1028, and R1026. The gain of the stage is varied by drawing current away from the feedback path into the diode-resistor arrays, as discussed below.

Diode-Resistor Arrays. U1037, U2037, and associated components form a divider array that controls the gain of the shaper amplifier. The input to the amplifier is a variable dc tune voltage plus a ramp voltage that varies in amplitude as a function of the analyzer span setting. Total input swing is within ±10 volts. As the output voltage amplitude increases, the amount of negative feedback decreases. Each diode in the array is biased to conduct at successive amplitude points, until all are conducting. As each diode conducts, more current is drawn from the feedback loop which increases the gain of the amplifier. The resultant output voltage is a non-linear function of the input of the +15 to +40 volt range. This voltage is applied to the varactor diode port (Vv) to tune and sweep the oscillator.

Cavity Oscillator

Refer to the Cavity 2nd LO description in the 2nd Converter section.

CENTER FREQUENCY CONTROL 39

Refer to the block diagram adjacent to Diagram 39. The Center Frequency Control circuits form the electrical interface between the front-panel controls and the converter stages in the 492. The circuit receives digital information and instructions from the microcomputer, and converts it to a coarse and fine tuning voltage that is applied to the other elements of the Frequency Control system.

The Center Frequency Control circuits consist of the following major blocks:

1. The Digital Control circuits, which buffer and decode the addresses and other data to control the other circuits.

2. The coarse and fine storage registers (latches), which store the numerical bytes that control the DAC (digital-to-analog converter) stages.

3. The coarse and fine DAC stages, which convert the digital inputs from the storage registers into analog current and voltage equivalent values.

4. The coarse and fine track/hold amplifiers, which store the analog output values during the approximation routine, and compare the stored value and the approximated value for the microcomputer.

5. The write-back circuits, which inform the microcomputer when the stored value and the approximated values are equal.

Operating Modes.

Some explanation of the design principles of the circuit is required before the operation of the circuit can be discussed. DAC devices are now available that can furnish the resolution required to tune the analyzer in small enough steps. To achieve the necessary amount of resolution, two DAC devices are used in tandem. However, this method can cause some errors and non-monotonic behavior in the overall converter circuit.

To circumvent this problem, the outputs of the tandem DAC units are summed together so that the two units are overlapped by three bits (that is, the MSB of the low-order DAC is weighted equally with the third least significant bit, or 2E-10 bit). The overlap means that the lower DAC will have sufficient range to monotonically tune the output of the converter over the entire range of the analyzer, but only if the proper codes of the lower DAC device can be found. Now, suppose that the tandem DAC is loaded as follows:

Upper order:
1 0 0 0 0 0 0 0 0 0 0 0
Lower order: 1 1 1 1 1 1 1 1 1 1 1 1

The contents of the devices are shown overlapped to illustrate the bit weighting. Now assume that the low-order device is to be incremented one bit. The MSB of the low-order device must be moved into the high-order device before the low-order device can be incremented. Thus, the two must appear as shown below:

High-order:
1 0 0 0 0 0 0 0 0 0 0 0
Low-order: 0 1 1 1 1 1 1 1 1 1 1 1

If the high-order device operated with no overall linearity inaccuracy, the operation would now be complete, and the low-order incrementation could occur. However, the DAC device can vary by one LSB of the correct value; Figure 5-27 illustrates a graph of the best and worst case output instances. Note that even in the worst case, the output may move only once every two or three state changes, but the output is always monotonic and within one LSB of the correct value.

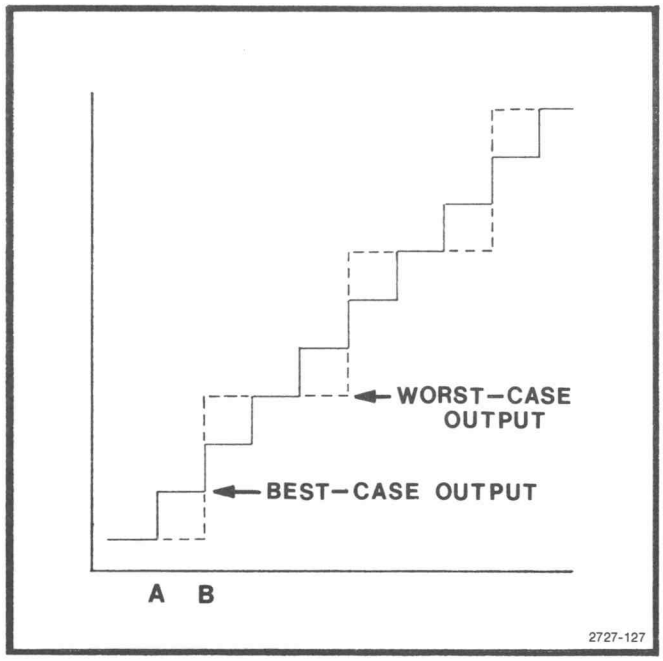

Figure 5-27. DAC variance graph.

If, in the example shown earlier, the high-order device is at point A in Figure 5-27, incrementing the device to point B has no effect on the output. If the MSB of the low-order device is set to zero, as shown in the first example, the combined output will actually decrease. Ordinarily, the Center Frequency Control circuit can increment and decrement whenever the microcomputer commands without going through a special routine. However, as just described, some microcomputer adjustment is necessary to compensate for the disparity that usually occurs between the low-order and high-order DAC units.

The first operating mode is the tracking mode, where the preamplifier and integrator are connected together by the disconnect stage, and the entire unit acts as an operational amplifier. Figure 5-28 illustrates the basic circuit. While the circuit operates in this mode, the amplifier tracks the DAC stage, and sends the voltage out to the tuning circuits.

When the transfer of bits from the lower to the upper DAC is required, the microcomputer commands the circuit to shift to the hold mode. The command comes through the decoder to shut off the disconnect stage, and the preamplifier output is disconnected from the integrator. The integrator holds the voltage that was previously at the output for comparison, and the approximation cycle begins.

The microprocessor resets the low order DAC to zero. Then, the highest order bit in the low order DAC is set to one, and the circuit is queried to find if the DAC output and integrator output is greater or less than required. If less, the microprocessor loads the next lower bit in addition and queries the circuit once more. This process

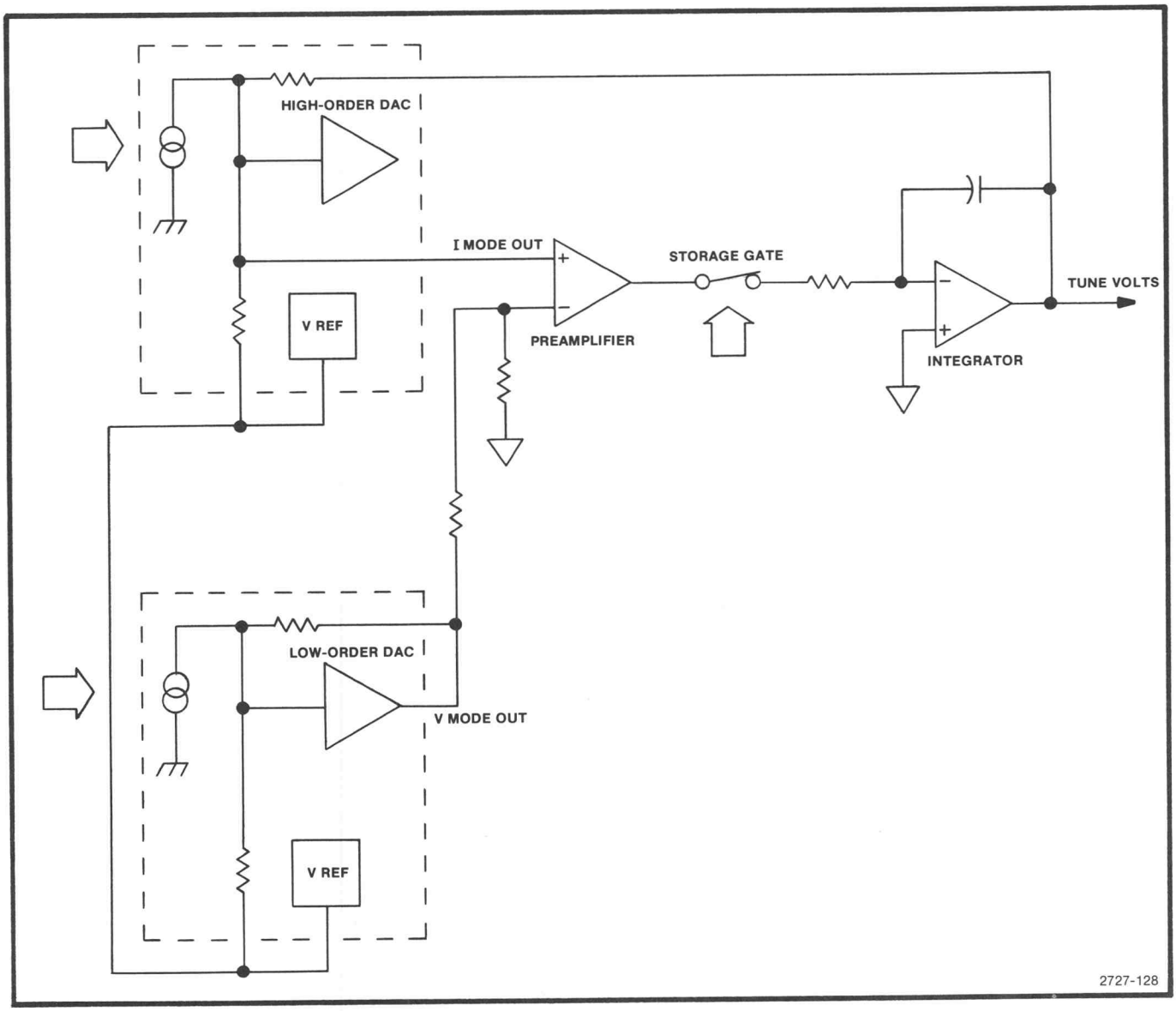

Figure 5-28. Basic tune voltage converter.

goes on until the two values are the same. Had the microprocessor found that the DAC output was greater than the integrator output at the first inquiry, it would have set the highest order bit to zero and loaded the second-order bit into the low order DAC, then continued to load successively lower order bits, one at a time, until the circuit signalled that the comparison had reversed. By this process, which is known as the successive approximation method, the circuit finally reaches the point where the outputs are equal, and the microcomputer commands the circuit to shift back to the track mode.

The following is in two parts; the first applies to Center Frequency Control boards 670-5547-01 and later, the second to boards 670-5547-00. While reading the following description refer to Diagram 39 or 39A.

Digital Control (Board 670-5547-01 and up.)

The digital control circuits consist of buffer U2016, address decoder U2014, steering register U2022, and the steering gates (U2024A, U2024B, U2024D, U2026A, U2026B, and U2026C). Because of the quantity of data that must pass through these circuits, a steering register is used that has a separate address. The first byte of data, which is the steering byte, is clocked into U2022 by the ADDRESS 70 signal. The output levels are applied to the steering gates, and the circuit waits for the next byte. The microcomputer then furnishes the first byte of data to be sent to low-order fine-tune digital-to-analog converter (DAC) U3024, for example, by way of storage register U3022. The byte is clocked into the register by the coincidence of low states at the inputs of U2026C; one from the steering byte, and the other from the ADDRESS 71 signal, which is used to clock the steered data bytes

into the correct register. This continues until seven bytes of data have been clocked into the circuits, including the steering byte. The third output from U2014, ADDRESS 80, controls transistors Q2043 and Q1039, which enable the write-back function.

In addition to the six steering lines that drive the steering gates, U2022 also controls, by means of the Q1 and Q8 lines, the hold/track selector transistor for each converter side. Table 5-17 illustrates the format for ADDRESS 70. Addresses are expressed as hexadecimal numbers. Table 5-18 lists some of the significant states that are used to tune the DAC.

Storage Registers. Six storage registers are used in the circuit, (U1014, U1016, U1022, U3014, U3016, and U3022 respecitvely). Since both sets are identical, only the first three are described.

Data from U2016, the data buffer, is clocked into the registers each time a different tune voltage is required. U1022 feeds the lowest eight bits of the low-order DAC, U1024; U1014 feeds the highest eight bits of the high-order DAC, U1030; and U1016 feeds the remaining bits of both units.

Digital To Analog Converters. Each side of the converters has two DAC stages: U1024 and U1030 for the Coarse Tune circuit, U3024 and U3030 for the Fine Tune circuit. Since both sets operate the same, only the Coarse Tune units are described. Each of the DAC units furnish current or voltage outputs that are commensurate to the data applied. Figure 5-28 shows a basic block diagram of each DAC, shown as it operates in this circuit.

The DAC unit is basically a programmable current generator that drives an internal high quality operational amplifier. In this configuration, only the low-order DAC uses the internal operational amplifier. Thus, the low-order unit operates in the voltage output mode, and the high-order unit operates in the current output mode. The two devices feed the two inputs of preamplifier U1044, which sums the two inputs, amplifies the sum, and sends it through the switching circuit to the integrator.

Since the DAC units generate the dc voltage that tunes the entire instrument, noise and extraneous signals must be kept at a minimum. Thus, each tune voltage is provided with an isolated ground system, U1042A/U1042B for the Coarse Tune voltage converter, and U1041A/U1041B for the Fine Tune voltage converter.

Track/Hold Amplifiers

Since the coarse and fine amplifiers are identical in operation, only the coarse amplifier is described here. The amplifier consists of preamplifier U1044, control transistor Q2044, storage gate FET Q2044, and integrator amplifier U2046.

The output of the low-order DAC (U1024) is fed through input resistor R1048 to the inverting input of preamplifier U1044. The current output of the high-order DAC, U1030, is fed directly into the non-inverting input of the preamlifier. Feedback resistor R1044 establishes the gain of the stage at about 10,000 (ratio of R1044 to R1046). The combination of CR1046, CR1045, and R1047, in the feedback circuit, prevents the output from swinging to extreme voltages with large input signals. Thus, whenever the output exceeds about one volt in either direction, one of the diodes conduct and connects R1047 and R1045 across the feedback path to reduce the gain of the stage to about unity. The output signal from the preamplifier is connected to the source of storage gate FET Q2046. The gate of this device is controlled by transistor Q2044. Normally the circuit is tracking, so line Q8 (B7) from U2022 is low and Q2044 is conducting. CR2035 is cut off since the voltage drop across R2043 holds the gate of Q2046 at about −0.4 volt. (The 0.4-volt back bias on the source-gate junction reduces memory slewing while switching modes.) Q2044 holds the diode back-biased as long as the transistor continues to conduct. This permits Q2046 to pass the signal from the pre-amplifier output to the integrator input.

Integrator U2046 tracks the preamplifier output during track mode and serves as the inverting amplifier for the feedback system shown in Figure 5-28. Under normal circumstances the incoming signal is routed through R2046. To improve the amplifier's slewing rate, CR2044 and CR2045 conduct to connect R2047 in parallel with R2046 when signals in excess of one volt are applied. This speeds up the response of the circuit when large scale tuning changes are required.

When the hold mode is selected, line Q8 (B7)of U2022 moves high, Q2044 cuts off and CR2044 pulls the gate of Q2046 low enough to cut off the FET. This disconnects the preamplifier from the integrator which then maintains the charge on C2046 during the approximation routine. COARSE TUNE RANGE adjustment R1032 is connected across pins 16 and 18 of U1030. It compensates for the different resistance values inside the DAC. This variation is more serious in the higher-order DAC owing to its greater effect on the output.

Write-Back Circuits

These circuits consist of amplifier U2044 and U3045, plus enabling transistors Q1039 and Q2043. Since both are identical, only the coarse circuit is described.

Following the command to shift to the hold mode, the microcomputer will interrogate the circuit to see if the DAC output and the stored voltage match. It does this by pulling ADDRESS 80 high. This causes Q1039 to conduct, which in turn furnishes U2044 with operating current. The output of U1044 is at zero volts when the two input voltages match. If the loop error voltage is high, U2044 will pull down on DATA BUS line 7. This informs the microcomputer whether the bit just set is too large or too small. The output of U2044 is open-collector, so it has no effect on the data line when it is not pulling the line low.

Digital Control (Board 670-5547-00)

The digital control circuits consist of buffer U2016, address decoder U2014, steering register U2018, and the steering gates (U2024A, U2024B, U2024D, U2026A, U2026B, and U2026C). Because of the quantity of data that must pass through these circuits, a steering register is used that has a separate address. To start, the first byte of data, which is the steering byte, is clocked into U2018 by the ADDRESS 70 signal. The output levels are applied to the steering gates, and the circuit waits for the next byte. The microcomputer then furnishes the first byte of data to be sent to low-order fine-tune digital-to-analog converter (DAC) U3024, for example, by way of storage register U3018. The byte is clocked into the register by the coincidence of low states at the inputs of U2026C; one from the steering byte, and the other from the ADDRESS 71 signal, which is used to clock the steered data bytes into the correct register. This continues until seven bytes of data have been clocked into the circuits, including the steering byte. The third output from U2014, ADDRESS 80, controls transistors Q3033 and Q2032, which enable the write-back function.

In addition to the six steering lines that drive the steering gates, U2018 also controls, by means of the Q4 and Q8 lines, the hold/track selector transistor for each converter side. Table 5-17 illustrates the format for ADDRESS 70. Addresses are expressed as hexadecimal numbers. Table 5-18 lists some of the significant states that are used to tune the DAC.

Storage Registers. Six storage registers are used in the circuit, three for the Coarse Tune circuit, and three for the Fine Tune circuit (U1014, U1016, U1018, U3014, U3015, and U3018, respectively). Since both sets are identical, only the first three are described.

Data from U2016, the data buffer, is clocked into the registers each time a different tune voltage is required. U1018 feeds the lowest eight bits of the low-order DAC, U1024; U1014 feeds the highest eight bits of the high-order DAC, U1028; and U1016 feeds the remaining bits of both units.

TABLE 5-17
ADDRESS 70 FORMATS

DB0	Fine Tune hold
DB1	Fine Tune low byte enable
DB2	Fine Tune mid byte enable
DB3	Fine Tune high byte enable
DB4	Coarse Tune high byte enable
DB5	Coarse Tune mid byte enable
DB6	Coarse Tune low byte enable
DB7	Coarse Tune hold

Digital To Analog Converters. Each side of the converters has two DAC stages: U1024 and U1028 for the Coarse Tune circuit, U3024 and U3028 for the Fine Tune circuit. Since both sets operate the same, only the Coarse Tune units are described. Each of the DAC units furnish current or voltage outputs that are commensurate to the data applied. Figure 5-28 shows a basic block diagram of each DAC, shown as it operates in this circuit.

The DAC unit is basically a programmable current generator that drives an internal high quality operational amplifier. In this configuration, only the low-order DAC uses the internal operational amplifier. Thus, the low-order unit operates in the voltage output mode, and the high-order unit operates in the current output mode. The two devices feed the two inputs of preamplifier U1034, which sums the two inputs, amplifies the sum, and sends it through the switching circuit to the integrator.

Since the DAC units generate the dc voltage that tunes the entire instrument, noise and extraneous signals must be kept at a minimum. Thus, each tune voltage is provided with an isolated ground system, U1032 for the Coarse Tune voltage converter, and U1033 for the Fine Tune voltage converter.

TABLE 5-18
DAC TUNING CODES

Tuning Point	Data	Address	Results
Positive full-range	00	70	Enables all latches, track mode
	00	71	Loads zeros into all positions of both DAC's
Mid-range	00	70	Enables all latches, track mode
	00	71	Loads zero into all positions of both DAC's
	33	70	Enables high byte latch, track mode
	80	71	Loads 80 into DAC's. Midrange value
Negative-full-range	00	70	Enables all latches, track mode.
	FF	71	Loads FF into all positions of both DAC's

Track/Hold Amplifiers

Since the coarse and fine amplifiers are identical in operation, only the coarse amplifier is discussed here. The amplifier consists of preamplifier U1034, control transistor Q2031, storage gate FET Q2036, and integrator amplifier U2036.

The output of the low-order DAC (U1024) is fed through R1035, which is the input resistor for the inverting input of preamplifier U1034. The current output of the high-order DAC, U1028, is fed directly into the non-inverting input of the preamplifer. Feedback resistor R1037 establishes the gain of the stage at about 10,000. The combination of CR1036, CR1035, and R1039, in the feedback circuit, prevents the output from swinging to extreme voltages with large input signals. Thus, whenever the output exceeds about one volt in either direction, one of the diodes conduct and connects R1039 across the feedback path to reduce the gain of the stage to about unity.

The output signal from the preamplifier is connected to the source of storage gate FET Q2036. The gate of this device is controlled by transistor Q2031. Normally, the circuit is tracking, so line Q8 from U2018 is low, and Q2031 is conducting. CR2035 is cut off, since the voltage drop across R2036 holds the gate of Q2036 at about -0.4 volt. (The 0.4-volt back bias on the source-gate junction reduces memory slewing while switching modes.) Q2031 holds the diode back-biased as long as the transistor continues to conduct. This permits Q2036 to pass the signal from the pre-amplifier output to the integrator input.

Integrator U2036 tracks the preamplifier output during track mode, and serves as the inverting amplifier for the feedback system shown in Figure 5-28. Under normal circumstances, the incoming signal is routed through R2037. To improve the amplifier's slewing rate, CR2036 and CR2037 conduct to connect R2039 in parallel with R2037 when signals in excess of one volt are applied. This speeds up the response of the circuit when large scale tuning changes are required.

When the hold mode is selected, line Q8 moves high, Q2031 cuts off, and CR2035 pulls the gate of Q2036 low enough to cut off the FET. This disconnects the preamplifier from the integrator which then maintains the charge on C2038 during the approximation routine.

COARSE TUNE RANGE adjustment R1032, is connected across pins 16 and 18 of U1028. It compensates for the different resistance values inside the DAC. This variation is more serious in the higher-order DAC, owing to its greater effect on the output.

Write-Back Circuits

These circuits consist of amplifier U2034 and U2035, plus enabling transistors Q2032 and Q3033. Since both are identical, only the coarse circuit is described.

Following the command to shift to the hold mode, the microcomputer will interrogate the circuit to see if the DAC output and the stored voltage match. It does this by pulling ADDRESS 80 high. This causes Q2032 to conduct, which in turn furnishes U2034 with operating current. The output of U1034 is at zero volts when the two voltages match. If the loop error voltage is high, U2034 will pull down on DATA BUS line 7. This informs the microcomputer whether the bit just set is too large or too small. The output of U2034 is open-collector, so it has no effect on the data line when it is not pulling the line low.

8

PHASE-LOCK SYSTEM (Option 3)

Functional Description

The phaselock section, which is included when Option 3 is part of the instrument, is a frequency control system that substantially improves the stabilization of the 1st LO (first local oscillator).

The phaselock system consists of two frequency servo loops, called the outer loop and inner loop. Operation of the inner loop is as follows: The 100 MHz reference signal from the 3rd Converter is applied to the Synthesizer, where it is first divided by two, then sent to the phaselock circuits to be used as a reference frequency. It is further divided to 25 MHz in the synthesizer circuits and applied to the ÷ N circuits which reduce the signal to a reference frequency (depending on the ÷ N number), between 32 and 94 kHz and applied it to the Offset Mixer, where it is compared with the mixer output. The original 25 MHz is also applied to the Offset Mixer.

The Controlled Oscillator operates between 25.032 and 25.094 MHz, depending on the drive from the Error Amplifier. This signal is applied to the Offset Mixer, where it mixes with the 25 MHz reference frequency. The difference frequency, which is from 32 to 94 kHz, is applied to the phase/frequency detector and compared to the ÷ N reference frequency. If the two signals are edge and frequency coincident, phaselock occurs. If they do not coincide, an error signal is generated, passed through the Error Amplifier, and applied to the Controlled Oscillator. This forces the oscillator to shift to the reference frequency. This evolution typically lasts for only a few milliseconds, so the inner loop phaselock is, for all practical purposes, instantaneous.

The outer loop, which includes the inner loop circuits (Offset Mixer, Error Amplifier, and Controlled Oscillator), consists of the Strobe Driver, Phase Gate, Error Amplifier, and 1st LO (The phaselock control circuits are a part of the operation, but are not considered a part of the loop.)

The 25.032 to 25.094 MHz output from the Controlled Oscillator is applied to the Strobe Driver, where it is divided by five, filtered, and sent to the Phase Gate Detector as a 5.006 to 5.019 MHz strobe signal. This signal generates line spectra that are equally spaced

about 5 MHz apart over the entire spectrum. At about the 400th line, which corresponds to about 2 GHz. Assuming that the 1st LO is tuned in that vicinity, one of these lines is within 2.5 MHz of the 1st LO frequency. The Phase Gate outputs a signal that is proportional to the difference between the 1st LO frequency and that of the nearest strobe line. The signal is counted by the phaselock control circuits.

Now, as the search for phaselock begins, the microcomputer moves the strobe in about 1 MHz increments. It does so by sending a new number for each step to the ÷ N Counter. With each change in the ÷ N output signal, the Controlled Oscillator frequency changes to match, and the strobe signal shifts toward the 1st LO frequency. When the Phase Gate generates an error that is below 500 kHz, it passes through the filter in the Error Amplifier circuits, and the microcomputer is notified of the proximity of the strobe. The microcomputer now backs the strobe away from the 1st LO frequency in smaller increments until the 500 kHz bandwidth is encountered. This locates the 1st LO to be about 500 kHz away from the strobe signal. The microcomputer now moves the strobe to the middle of the bandwidth, about 250 kHz away, then takes three small steps closer while noting the change in error frequency with each step. With this information, the microcomputer can compute the position of the 1st LO frequency, does so, and places the strobe within approximately 10 kHz of the 1st LO frequency. Then, the microcomputer commands "lock", which puts a more precise servo system into operation, as follows.

Previously, the microcomputer was moving the strobe around to find coincidence with the 1st LO frequency. The F(s) amplifier in the Error Amplifier circuits will now change the current to the FM Coil of the 1st LO so the 1st LO frequency finds and locks on frequency with the strobe. Any frequency difference between the strobe signal and the 1st LO will generate a correction voltage of low frequency that is filtered by the F(s) amplifier, then used to drive the FM Coil back to the strobe position. If the 1st LO drifts beyond the operating range of the F(s) amplifier, the microcomputer is alerted and the remainder of the circuits indicate the direction of drift. The microcomputer then tunes the Center Frequency Control circuits to null out any FM coil current in the phase-lock loop.

PHASELOCK CONTROL 40

Refer to the block diagram adjacent to Diagram 40.

The Phaselock Control section consists of the following major circuits: 1) The address decoder, which receives and decodes the talk and listen commands for the phaselock loop. 2) The service request circuits, which sense an impending loss of phaselock, send a service request to the microcomputer, and cancel the request when directed by the microcomputer. 3) The data buffer, which transmits and buffers data from the microcomputer to the phaselock control and inner loop circuits. 4) The multiplexer divider circuits, which multiplex input signals, including the F ERROR signal, and divide the signal frequency for application to the counter-buffer stages. 5) The counter buffer , which accumulates the divided signal from the multiplexer-divider circuits; then, upon command from the microcomputer, multiplex the data from the buffers to the data bus. Some status signals share one of these buffer stages. 6) The phaselock sensor circuit, which monitors the SEARCH signal, and informs the microcomputer of phaselock status.

Refer to Diagram 40 while reading the following description.

Address Decoder

The addresses from the microcomputer are decoded by decoder U7055. The phaselock control circuits have both a talk address, where the counter-buffer circuits are instructed to talk on the data bus, and a listen address, where U7041 is directed to receive data from the data bus. The talk address is F3; the listen address is 73.

Service Request Circuits

The service request circuits consist of multiplexer U6105, one-shot U6028B, latch U6066A, and associated circuitry. This circuitry alerts the microcomputer in the event that the 1st LO has drifted too far.

The UP and DOWN signals from the window comparator (located on the Error Amplifier board) drive NOR gate U6015. Both signals are also sent to U4025, where their status can be read by the microcomputer. When one of these signals is high it indicates that the Error Amplifier is approaching its operating limits and the microcomputer should adjust the 1st LO frequency so the Error Amplifier returns to the center of its range. A high at either input of U6015B produces a negative transition that triggers one-shot U6028B. U6028B remains set for about 35 us and sets U6066A, causing two actions to occur: The Q output drives Q7060 into saturation initiating the service request for this address and the complement output of U6066A pulls the 1G and 2G inputs of multiplexer U6105 low, enabling both sides. This device allows Q4090 and U6066A to respond to inquiries by the microcomputer to determine which address requested service. The microprocessor initiates the polling routine, which consists of pulling the POLL signal and AB7 high, then interrogating each data bus line in succession to determine which requested service; that is, which data line is low. This is done by setting the 1Y output of U6105 high, which causes Q4090 to pull the D2 line low. To affirm which address requested service, the microcomputer now causes the 7 address line to move low, which, via the 2Y line from U6105, clocks U6066A to the reset state as the microcomputer holds data bus line 2 low. This cancels the service request by cutting off Q7060, permitting its output to move high. In addition, the complement output of U6066A moves high, disabling the inputs to U6105. This brings the service request circuitry back to its original state.

Data Buffer

This consists of buffers U7041, U6078D, U6078A, and U6078E. U7041 is the listen buffer for the Phaselock Control circuits. When address decoder U7055 is addressed to listen by the microcomputer it enables U7041, which passes on the buffered data to the other circuits in the Phaselock Control and inner loop circuits. The function of each data bits is as follows:

D0 This line carries the data that preloads the ÷ N counter in the synthesizer circuits bit by bit in serial format.

D1 The N LATCH signal is sent on this line. It is used to latch the N DATA into the synthesizer counters.

D2 Reserved for future applications.

D3 This signal resets the buffer sequencer at the outset of a talk cycle for the counters.

D4 This line (CONTROL LATCH) latches a control word into the output buffers of U2025 on the Error Amplifier board.

D5 This signal clears all the counter stages in the counter-buffer circuits in anticipation of a count sequence.

D6 By controlling the state of U6066B, this line selects the signal source to be passed through U2105 to be counted.

D7 This line furnishes the clock pulses for two areas of circuitry. First the clock, which starts out coincident with the N DATA on line D0, is delayed by an RC circuit; then, it passes through buffer U6078D where it is sent in two directions. The signal is buffered through U6078E and used as the clock pulse for U6066B. Also the signal, now delayed, is used as the shift register clock for the ÷ N counter latches on the synthesizer board. The slight delay is to provide adequate setup time for the data prior to the clock signal arriving.

Multiplexer-Divider

This circuit consists of U6078B, U2105, and U2091. The F ERROR signal enters at pin 12 of the board where it is routed through buffer U6078B and applied to multiplexer U2105. This multiplexer selects between several signal sources to be counted. However, all other possible signal sources apply to future applications, so for the time being, U2105 passes to only the F ERROR signal through to U2091. The F ERROR signal enters the multiplexer at pin 4. It is passed through to the 1Y output, and into the upper section of dual four-bit binary counter U2091, where it is divided by two, and sent out the QA output. This signal is passed through the other side of the multiplexer, out the 2Y line, into the lower section of U2091. The QC output of U2091, which is the F ERROR signal divided by eight, is applied to the first counter, U2065. The QD output, which is F ERROR signal divided by 16, is used to control the multiplexer, and to keep the microcomputer posted on the progress of the count.

Refer to Figure 5-29 which illustrates the timing relationships. The circuit functions as follows. At the outset of a count cycle, the microcomputer sets the D5 line high, to clear all of the counters including U2091. All outputs of U2091 that are connected are low. This enables U2105 to pass signals. At the first negative edge from the F ERROR signal, U2091 begins counting. Eight cycles later QC moves high, enabling U2065 to begin counting the buffered 50 MHz signal from the synthesizer circuits, by way of U401C. The count continues until eight more cycles of F ERROR have occured, at which time line QD moves high, disabling the multiplexer and stopping the F ERROR signal from passing. The count will remain in the counters until it is cleared by a command from the microcomputer.

Counter-Buffer Stages

This circuit consists of counters U2065, U4062, and U2055; buffers U4049, U2036, and U4025; buffers U6015A and U4074B; and the buffer multiplexer, which consists of counter U2078 and buffer U4074A.

As mentioned earlier, the 50 MHz signal from the Synthesizer is applied to the input of U2065, and the five four-bit stages are permitted to count this signal for the period that U2091, pin 9, remains high. As this occurs, the microcomputer periodically examines the state of the VALID COUNT line. It does so by resetting U2078 through data sent through U7041; when U2078 is reset, pin 3 is high. When the microcomputer pulls the Y7 line of U7055 low, the outputs of U4074A are enabled, which in turn enable the outputs of buffer U4025. These output line are connected in common to the output lines of the other two buffers, but neither of the others are enabled, so they have no effect for the present. The microcomputer is thus able to examine the VALID COUNT line; if it is still low, indicating that the count is not complete, the microcomputer releases the Y7 line, which increments U2078 and disables U4074A. This in turn disables all three buffers and clears the data bus. If the VALID COUNT line is high when the micro-computer interrogates the stage, the data from U4025 is accepted; the microcomputer then re-addresses U7055, which increments U2078, and U2036 is enabled instead of U4025. The microcomputer accepts that data, then once more increments U2078. This enables the last of the three buffers, U4049, to send its data on the bus. When the microcomputer receives the last of the three data bytes, it resets U2078 and clears the bus.

Phaselock Sensor Circuits

This circuitry consists of transistors Q7030 and Q5030, single-shot U6028A, plus surrounding circuitry. The SEARCH signal from the Error Amplifier is applied to Q7030 for amplification, then applied to trigger the one-shot U6028A. The period of the SEARCH signal (when the 1st LO is not phaselocked) is shorter than the time constant of U6028A so the single-shot cannot return to its quiescent state. Thus when the microcomputer examines the D4 line, it is informed that the circuits are still in search condition and that phaselock has not yet occurred. The Q output of U6028A drives Q5030, which during search condition holds the UP and DOWN lines

low, preventing the Service Request circuits from calling for a fine tuning routine. (See previous description on Service Request circuits.) When the instrument finally enters phaselock, the error amplifier stops oscillatinig (i.e., searching for a lock point), U6028A times out to the reset state, and the LOCK line from U6028A moves high. When the microcomputer later interrogates the board, it will be informed that the instrument is in phaselock. Also when the single-shot times out, Q5030 is cut off, permitting the UP and DOWN lines to move freely so that the service request circuits are once again in operation.

ERROR AMPLIFIER AND SYNTHESIZER

41 42

The Synthesizer uses the 100 MHz reference frequency from the 3rd Converter to generate 50 MHz for the Phase Lock Control, and 25 MHz plus a ÷ N frequency, determined by the ÷ N number, for the Offset Mixer. The ÷ N number produced by the Synthesizer, is determined by the microcomputer and ranges from 32 to 94 kHz.

The Error Amplifier: 1) integrates the error signals from the Offset Mixer and produces a correction voltage to pull the Control Oscillator to a frequency that is synchronous with the ÷ N signal; 2) generates a STROBE ENABLE to enable the strobe generator in the Strobe Driver circuit; 3) produces an UP or DOWN signal to alert the microcomputer that the drive current to the 1st LO FM coil is reaching its limit in holding the 1st LO in phase lock; 4) generates an F ERROR signal, from the outer loop ERROR 1 signal, to be used by the Phase Lock Control in determining the proximity of the 1st LO frequency to the strobe line. Refer to Diagram 41 while reading the following.

Synthesizer Circuits

The Synthesizer can be divided into the following functional blocks: The 100 MHz divider, the 50 MHz divider, and the ÷ N counter.

100 MHz Divider. This circuit consists of flip-flop U3030, and differential pair Q3040 and Q3041. The 100 MHz signal from the 3rd Converter stage is applied to the clock input of U3030. (One-half of U3030 is used to furnish a stable bias source for the clock input.) The signal from the Q output is applied to Q3041, from which it is sent to the Phaselock Control circuits. The signal from the complement output of U3030 is applied through Q3040 to U1040B, the 50 MHz divider.

50 MHz Divider. This circuit consists of U1040B. The 50 MHz from the collector of Q3040 is applied to the clock input of flip-flop U1040B which divides the signal to 25 MHz. The signal from the Q output is sent to the Offset Mixer circuits. The complement signal is applied to the ÷ N Counter.

divide N Counter. This stage consists of two shift register/latches U2020 and U2030; three counters, U2010, U1020 and U1030; and flipflop U1040A. The circuit is controlled by three signals from the microcomputer by way of the Phaselock Control circuits. The ÷ N counter is used to furnish the 32 to 94 kHz reference frequency, which is applied to the Offset Mixer circuits. When power is first applied, and before phaselock is selected, this counter typically operates at about 6 kHz.

When phaselock operation is selected, the microcomputer sends data and a data clock to load a number into the latches, which accept and store serial data. The numbers that come from the microcomputer range from about 3300 to 3830, so the count remaining, until the counters overflow, is from about 265 to 795. When the number is loaded, the N LATCH signal

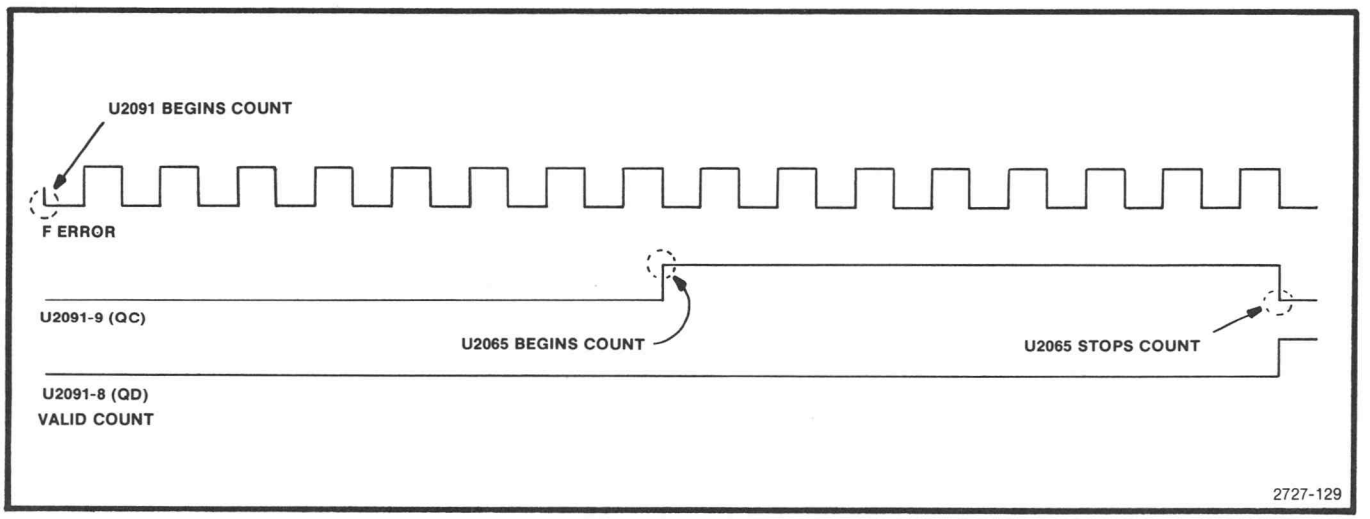

Figure 5-29. Timing diagram for F ERROR signal.

transfers the number from the input shift registers to the output registers of U2020 and U2030 where they are available to the counter stages. This presets the counters to a predetermined value, as just mentioned. Once loaded, the counters count at a 25 MHz rate to accumulate the remaining number of digits until they are full. Then the TC output of U1030 moves high and U1040A changes state. This presets the N number in the counter stages for another count cycle. The TC output of U1030 is again simultaneously set low so the next cycle of the 25 MHz, clocks U1040A back to the reset condition. The resultant output of U1040A is a series of positive pulses that range in period from 10 μs to 31 μs which is equivalent to 94 to 32 kHz. This signal is sent to the Offset Mixer for comparison with the difference frequency generated in the mixer circuit.

Error Amplifier

The Error Amplifier circuits consist of the digital control circuits, which decode the data from the microcomputer to drive other circuits on the board; the inner loop error voltage amplifier, which furnishes the tune voltage to the Controlled Oscillator; the search amplifier which drives the phaselock sensor circuits on the Phaselock Control board and the FM coil of the 1st LO; the window comparator which drives the service request circuits on the Phaselock Control board; and the error signal filter which filters and squares the ERROR 1 signal from the Phase Gate, and applies it to the multiplexer-divider circuits on the Phaselock Control board. Refer to Diagram 41 while reading this description.

Digital Control Circuits. These consist of shift register U2025 and quad switch U2037. Data from the microcomputer is fed serially, by way of the Phaselock Control circuits into the shift register, then transferred to the output lines by the LATCH signal. Table 5-19 lists the purpose of the output lines.

Error Voltage Amplifier. This stage, which consists of differential amplifier U3075 (shown on Diagram 41) and surrounding components, compares the outputs of the phase/frequency detector on the Offset Mixer board, furnishing an oscillator tune voltage to the Controlled Oscillator. Refer to the Offset Mixer description that follows for a more detailed description of this circuit.

Search Amplifier. This circuit consists of amplifier U2048 and surrounding components. The ERROR 1 signal from the Phase Gate Detector and Error Amplifier is applied through LOOP GAIN adjustment R3082 to the inverting input of U2048. The signal (ERROR 1) is a result of the comparison of the 1st Local Oscillator frequency and the nearest multiple of the STROBE signal from the Strobe Driver circuit. The ERROR 1 signal varies from zero to about 500 kHz, and is up to four volts peak-to-peak in amplitude. The LOOP GAIN adjustment is set for best sensitivity with minimum hunting.

Amplifier U2048 is connected to operate as a low-pass filter/integrator for the incoming ERROR 1 signal. During search operation, however, the inverting input side of the amplifier causes the stage to operate as a Wien-bridge oscillator at about 25 Hz. At this point, the U2037 outputs are in the following states: Q1 line is high (contacts open), because the phaselock system is in search mode; Q2 is high (contacts closed, which allows U2048 to drive the FM coil)' Q3 is high, allowing the lock bandwidth to be over 100 kHz wide (thus, the Wien-bridge circuitry has sufficient positive feedback to oscillate); Q4 is high, which enables the strobe; and Q5 is low because the system is in search mode. (Q1 and Q5 remain open during this part of the search operation to hold the window comparator disconnected.)

As the Strobe signal frequency is changed to be nearer the 1st LO frequency, the ERROR 1 signal decreases in frequency. Since the inverting side of U2048 is a low-pass filter, the decreasing frequency receives more amplification, until enough feedback occurs on the inverting side to suppress the oscillations on the non-inverting side (i.e., the negative feedback exceeds the positive feedback that normally sustains oscillations).

The SEARCH signal (once locked) is now essentially a dc level so the Phaselock Control circuits indicate to the microcomputer that lock has occurred; it in turn causes line Q3 to move low, closing the feedback path for the inverting side of U2048. This decreases the bandwidth, ensuring that the amplifier cannot break into oscillation until phaselock is broken. It also improves the close-in noise performance of the phaselock loop.

TABLE 5-19

U2025 OUTPUT LINES

Line	High	Low
Q1	Window disabled (QS low)	Wide window (QS low)
Q2	Lock (connected FM Coil)	Unlock (disconnected FM coil)
Q3	Search (wide loop gain response)	Narrow loop gain response
Q4	Strobe enabled	Strobe disabled
Q5	Narrow window	Wide window (with Q1 low)

Window Comparator. This circuit consists of U1015 and the associated components, and is used to sense when U2048 has approached its operating limits. When the microcomputer causes the Q2 signal to close the path from U2048 to the FM coil, U2048 begins to furnish current to the coil which causes the 1st LO to track the stable strobe signal. That is, each time the 1st LO frequency drifts, the ERROR 1 signal changes and U2048 shifts the FM coil current to bring the 1st LO back to its original frequency. At the same time, the microcomputer causes lines Q1 and A5 to be low, closing the contacts that connect the output of U2048 to the input of the window comparator through a divider network. Now, as the 1st LO frequency drifts, the search amplifier will compensate for the drift. If the drift is excessive, however, U2048 will approach its design limits and will be unable to furnish any more current to the FM coil.

Window comparator U1015 is a dual comparator stage that senses a deviation of ±15 mV. For instance, if a frequency shiht forces U2048 to move positive enough (approximately 3 volts), the upper half of the comparator conducts, and the UP line goes high. This triggers the service request circuits on the Phaselock board, which in turn alerts the microcomputer, which then begins adjusting the TUNE voltage from the Center Frequency Control circuits. If the output drifts negative, the other half of U1015 conducts, causing reverse action to occur.

Ordinarily, the input to the window comparator is attenuated by R2043, which reduces the voltage applied to U1015 to 0.3% of the output from U2048. This allows U2048 to drift up and down without immediately triggering either comparator. When R2043 is in the circuit, it is called "wide window" operation. When phaselock is deselected, the microcomputer selects narrow window (which bypasses R2043). The Center Frequency Control circuit is then instructed by the microcomputer to move the 1st LO frequency until the window comparator indicates that the FM coil current is near zero. This prevents the 1st LO frequency from shifting too far from the lock point when phaselock is cancelled.

Error Signal Filter. This circuit, which consists of active low-pass filter U2065 and Schmitt trigger U1035, filters and squares the incoming ERROR 1 signal for application to the Phaselock Control circuits. The ERROR 1 signal is applied through C2067 to an RC filter network that is a 500 kHz low-pass filter. After filtering, the signal is applied through ERROR COUNT BREAKPOINT adjustment R1061 to the input of U1035, a Schmitt trigger circuit. The squared output signal is then applied to the Phaselock Control circuits where it is used by the microcomputer for determining the relationship between 1st LO frequency and the strobe line.

CONTROLLED OSCILLATOR, OFFSET MIXER, AND STROBE DRIVER 42

Controlled Oscillator

The Controlled Oscillator is a voltage-controlled crystal oscillator whose frequency is controlled by the output of the Error Amplifier. The oscillator generates a reference signal that is used to stabilize the 1st LO frequency.

Refer to the block diagram adjacent to Diagram 42. The control voltage from the Error Amplifier, which is a function of the difference between the microcomputer controlled ÷ N signal and the Offset Mixer difference frequency, is applied to the Controlled Oscillator to regulate its frequency of operation. The circuit has two outputs: The first, which is part of the inner loop of the phaselock circuits, is fed to the Offset Mixer, where it is used to derive the difference frequency that is compared against the ÷ N signal. The second output, which is part of the outer loop, is fed to the Strobe Driver circuits, where it is divided down to become the STROBE signal that is compared against the 1st LO signal in the Phase Gate.

The Controlled Oscillator consists of five major circuits, four of which are connected in a positive feedback loop to sustain oscillation. These circuits are the resonator stage, the differential amplifier, the bandpass filter, the isolation amplifier, and the output amplifier. The resonator stage operates at a frequency of 25.032 MHz to 25.094 MHz. It presents a high impedance to ground at resonance, which reduces as the operating frequency moves away from the resonant point. The output signal from the resonator is fed to the differential amplifier, which splits the signal and sends it to the output amplifier and the bandpass filter. The output amplifier sends the signal to the Offset Mixer and the Strobe Driver, and reduces loading of the feedback loop. The bandpass filter strips the signal of any spurious responses or harmoics and feeds the signal to the isolation amplifier. This stage furnishes the positive feedback drive to the resonator stage, and isolates the bandpass filter from the resonator stage.

Refer to Diagram 42 while reading the remainder of this description. The resonator stage consists of crystal Y1012, varactor diodes CR1011 and CR1012, and related components. The stage operates within a frequency range of 25.032 to 25.094 MHz, controlled by the voltage applied to varactor diodes CR1011 and CR1012. Feedback energy for sustaining oscillations comes from the isolation amplifier by way of coil L1025.

The resonator output signal is applied to a differential amplifier Q2033 and Q2041. The Q2033 side drives the output amplifier and serves to isolate the output load from the feedback loop. Gain from this side is less than one. The signal is fed from the collector of Q2041, following amplification, into the bandpass filter.

The bandpass filter consists of passive components, and is used to strip the signal of any frequency components more than about 40 kHz away from the center operating frequency, which is approximately 25.06 MHz. Capacitors C1041 and C1042 are adjusted at the factory to set the bandwidth and center frequency of the filter. The signal from the filter is sent to the isolation amplifier.

Transistor Q1028 and related components make up the isolation amplifier. The amplifier is a common-base configuration, in order to match the impedance of the filter to the resonator. Output current from the stage furnishes positive feedback for the resonator.

The output amplifier consists of transistors Q2025 and Q2026, which are connected as a differential pair. The signal from the collector of Q2026 furnishes the signal that drives one side of the Offset Mixer; the signal from the collector of Q2025 drives the input of the Strobe Driver circuit, for eventual application to the Phase Gate circuits.

Offset Mixer

The Offset Mixer consists of a ring diode mixer circuit, a differential amplifier, and a phase/frequency detector. For explanatory purposes, assume that the Controlled Oscillator frequency is at 25.06 MHz, and the ÷ N signal is 50 kHz.

The 25.06 MHz signal from the Controlled Oscillator enters the board at pin N of the Offset Mixer assembly. It is coupled across transformer T2010 and applied to the ring diode mixer. The 24 MHz reference frequency is applied at pin K of the Offset Mixer and coupled through T1010 to the ring diode mixer. The four frequency components are picked off at the center tap of T2010. The two fundamental frequencies and the sum are blocked by a pi filter, and the 60 kHz difference is coupled across T2030 to differential pair Q1020-Q1030, then amplified to TTL levels by amplifier Q1040 and applied to the clock input of flip-flop U1050B, part of the Phase/Frequency detector.

The phase/frequency detector consists of flip-flops U1050A and U1050B, NAND gate U2050B, and inverter U2050A. Now, if the loop had been locked, the two flip-flop clock input signals would have been edge-coincident. Pin 4 and 5 inputs of U2050B would have moved high and after the signal at TP1058 goes low, the NAND gate would have reset both flip-flops. The result would have been a series of pulses of equal amplitude and width from each of the flip-flops. This would cause equal voltages to be applied to the Error Amplifier, and the Controlled Oscillator frequency would shift.

It is assumed, however, that the ÷ N signal is 50 kHz and the difference frequency from the collector of Q1040 is 60 kHz, for this description. Thus, the output of Q1040 is leading the ÷ N signal. U1050B sets first placing a high at the inverting input of U3075 which pulls the output of U3075 low until U1050A sets. A short time later, U2050B resets both flip-flops and U3075 will switch back to balance until the next correction cycle. This continues to occur until the two signals applied to the phase/frequency detector are edge-coincident.

The correction voltage in this example from U3075 is applied to the frequency-determining components of the Controlled Oscillator, and its frequency shifts downward. The frequency of the oscillator will continue to decrease until the output of U3075 is stable.

The Error Amplifier, which is part of the Error Amplifier assembly, is described here because it is an integral part of the inner loop. The stage consists of differential amplifier U3075 and surrounding components. As the signals driving the amplifier continue toward one direction, U3075 continues to drive the oscillator down in frequency. The circuit consisting of VR2065, CR3069, R2067, and C2072 clamps the output to prevent the varactor diode from becoming forward biased and stopping the oscillator.

Strobe Driver Circuits

The Strobe Driver circuit consists of ÷ 5 counter U1022, bandpass filter FL2064, source follower Q2091, and AND gate U1091A and U1091B.

The Controlled Oscillator signal is applied to the clock input of counter U1022 which is wired to divide the input signal by five. The STROBE ENABLE 1 line from the Error Amplifier permits the counter to operate when the line is low and is the means by which the microcomputer can shut off or turn on the strobe pulses. The output of the counter, which ranges from 5.006 MHz and 5.019 MHz, is coupled through an impedance matching network consisting of C2030, L1031, C2033, and C1032. This circuit raises the line impedance to about 8200 Ω. The signal is then passed through monolithic bandpass filter FL2064, through another impedance matching network, to the gate of Q2091. The signal is coupled from the source of Q2091 to the inputs of U1091A and U1091B, both of which are configured as buffers. U1091B drives the Phase Gate circuitry, and U1091A is reserved for future applications. Capacitors C1032 and C2105 adjust the input and output circuits of the filter for maximum signal amplitude at TP2087.

9

DIGITAL CONTROL

The Digital Control section of the 492 provides the operator/492 and digital controller/492 interfaces. It translates changes in front-panel controls and instructions received via the accessories interface or GPIB interface (492P only) into codes that control the instrument via the instrument bus.

The Digital Control section simplifies operating and programming the 492 and 492P. Unless overridden by the operator, the microcomputer automatically selects secondary parameters. Some examples are: when the operator selects span, the microcomputer chooses an appropriate bandwidth; when the operator changes the reference level, the microcomputer trades off input attenuation and IF gain.

In the 492P, the microcomputer can handle some operations automatically. Some examples are: the microcomputer can set PEAKING for best response; the microcomputer can search digital storage for signals and change FREQUENCY and REFERENCE LEVEL to zoom in on signals it finds.

The digital control operating program is defined by the meaning of the controls and commands given in the operating and programming manuals and is not further defined here. The following description focuses on the hardware.

The following circuits make up the digital control section.

Microcomputer, including processor and memory boards. Addressable registers on the instrument bus, Front panel Accessories interface. GPIB interface (492P only).

The microcomputer is based on a 6800 microprocessor; its operating program is stored in ROM. The microprocessor accesses the ROM-RAM, and I/O interface via the microcomputer bus. The bus operates with 16-bit addresses, 8-bit bytes, and several control lines for data transfers.

The front panel and the addressable registers that control some other 492 assemblies reside on the instrument bus. This bus requires only 8-bit addresses and transfers 8-bit bytes. The bytes may be codes to set or indicate the status of an assembly or, in the case of digital storage and crt readout, data values that correspond to the display. When one of the assemblies requires the attention of the microcomputer, it asserts a service request line. The microcomputer responds by finding the source of the service request and executing the appropriate service routine.

Processor communication over the instrument bus can be stopped by an external controller on the accessories bus; the external controller can then override normal operation.

The GPIB interface (492P only) resides on the microcomputer bus. It contains added ROM for the operting program used for GPIB I/O and added RAM. The interface is based on a general-purpose interface adapter (GPIA) IC that reduces processor overhead required for GPIB operation.

PROCESSOR 31

The Processor board contains the processor clock, microprocessor, address decoders, microcomputer bus buffers, and instrument bus interface. These blocks are shown on the Processor board block diagram adjacent to Diagram 31.

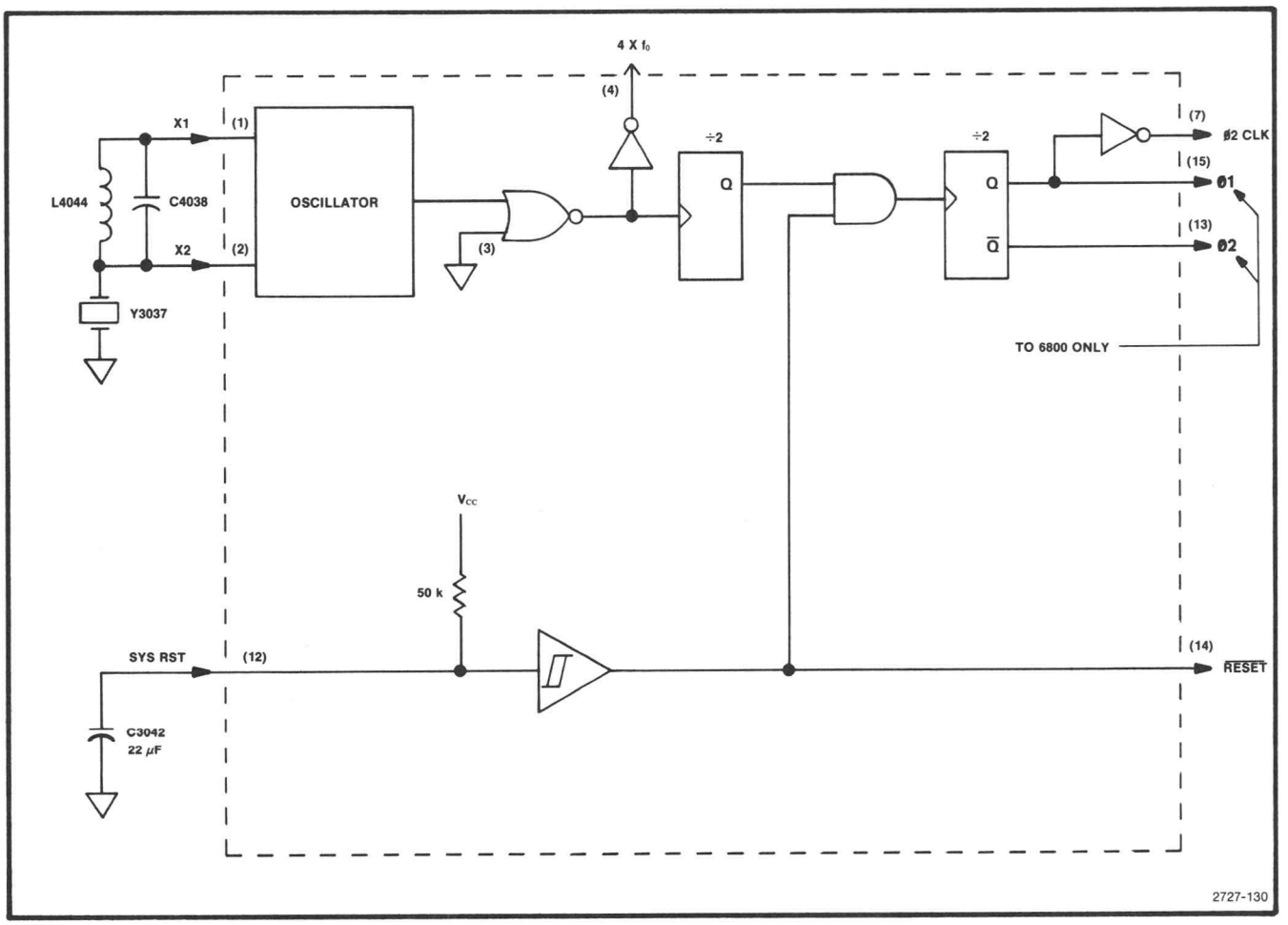

Figure 5-30. Simple logic diagram of processor clock.

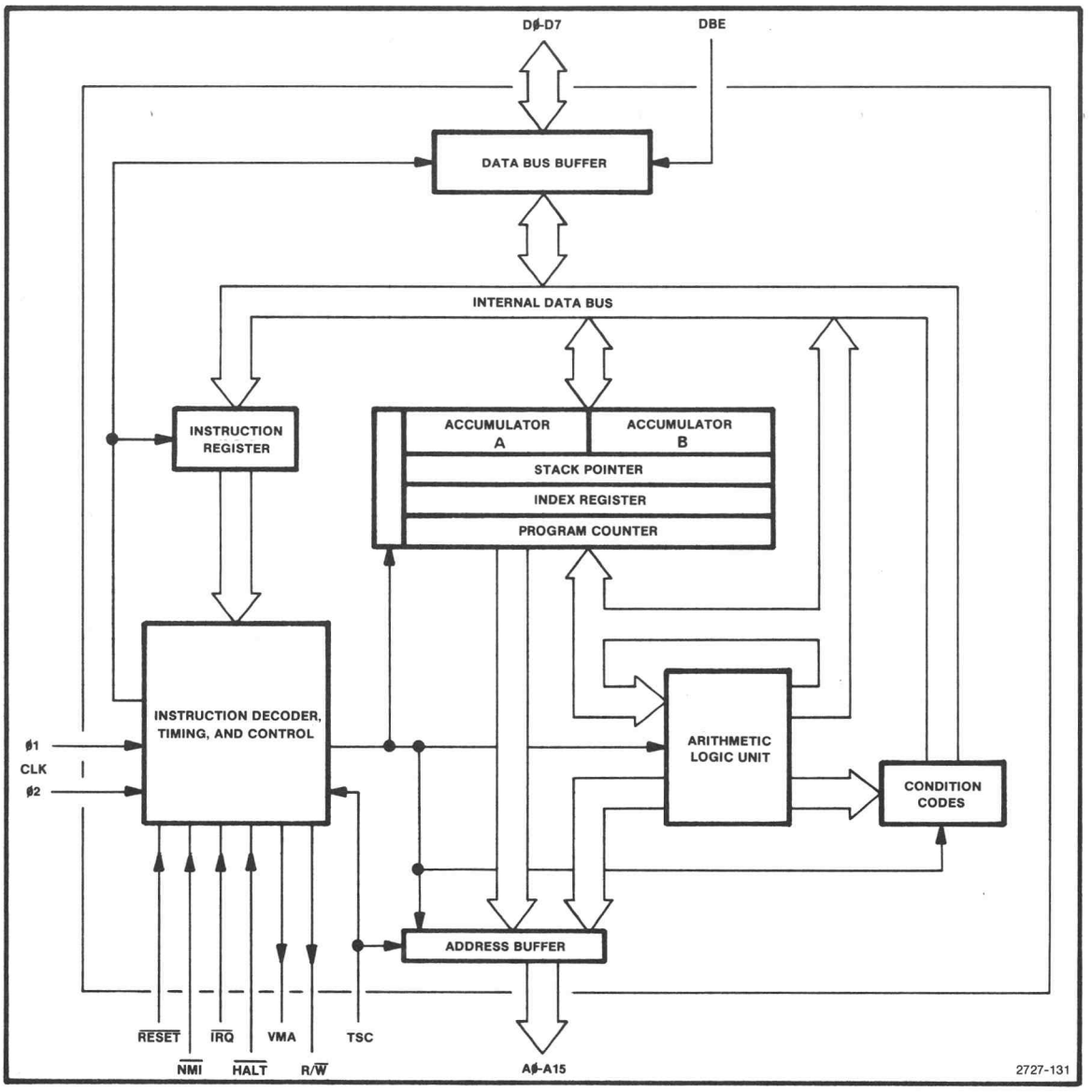

Fig. 5-31. Block diagram of the 6800 microprocessor IC.

Processor Clock

The two-phase processor clock is derived by U4035 from its internal oscillator. A simple logic diagram of this IC is shown in Figure 5-30.

The two clock signals, Φ1 and Φ2, are complementary and non overlapping. They are divided by 4 from the oscillator frequency for a processor clock frequency of about 850 kHz. The Φ2 CLK is buffered for use by the rest of the microcomputer system and is in phase with the Ø2 clock signal used by the 6800. The undivided oscillator frequency signal is distributed as CRT CLK for crt readout timing.

$\overline{RST}$ stays low while C3042 charges following power-up and holds the microcomputer in a reset state until the power supply is fully on. This signal does not disable the clock, so the 6800 can initalize itself during this time.

6800 Microprocessor

The 6800 microprocessor (U3027) is an 8-bit processor with an 8-bit bidirectional data bus and 16-bit address bus. The 6800 block diagram in Figure 5-31 shows the internal organization of the IC.

Accumulators. Eight-bit accumulators A and B hold operands for and results of ALU operations.

Condition Code Register. Bits in the condition code register indicate results of ALU operations and whether interrupts are masked; see Table 5-20.

Program Counter. This 16-bit register holds the address of the instruction being executed.

Stack Pointer. This 16-bit register acts as the pointer for a previously defined stack in memory. The pointer is the address of the next available location on a LIFO (last-in, first-out) basis. The stack is used to store the contents of MPU registers when an interrupt occurs or the 6800

TABLE 5-20
CONDITION CODES

Bit	Function
0	Carry from accumulator bit 7
1	Overflow
2	Zero result
3	Negative result
4	Interrupt mask
5	Carry from accumulator bit 3 (half-carry)
6	Unused (always 1)
7	Unused (always 1)

executes a subroutine. The stack pointer is decremented when data is pushed onto the stack and incremented when data is popped off the stack.

Index Register. This 16-bit register facilitates indexed-mode addressing. Instructions can load, increment, decrement, compare, etc., so it can also be used as a general purpose register.

Instruction Register and Decoder/Timing Control. During the instruction fetch (the first one or more machine cycles), successive bytes of an instruction are loaded from the program memory into the instruction register. The contents of this register are then passed to the decoder and timing logic. This block decodes the byte(s) and generates the machine states and control signals that effect execution of the instruction. The number of machine cycles this takes depends on the instruction and addressing mode.

Data and Address Buffers. These tri-state buffers isolate the 6800 internal busses from the external microcomputer bus.

Clocks. The two-phase TTL-level clock signals synchronize 6800 operation. A machine cycle is defined as the interval between two successive positive-going transitions of the Φ1 clock signal.

HALT. This input is unused (tied high through a pullup).

Three-State Control (TSC). This input is tied low so the address buffer and read/write line are always enabled.

Read/Write (R/W). This output sets the direction of data flow—high when the 6800 is reading data and low when the 6800 is writing data. It is also high between read and write operations.

Valid Memory Address (VMA). This output is asserted high when the 6800 places a valid address on the microcomputer bus. It enables the memory address decoders.

Data Bus Enable (DBE). This input is paired with the phase-two clock input so the data buffer is enabled during phase two of the machine cycle.

Figure 5-32 shows a read and a write cycle on the microcomputer bus. This illustrates how the control signals are used to control data transfers on the bus.

Interrupt Request ($\overline{IRQ}$). This input is buffered from SER REQ on the instrument bus. When one of the assemblies asserts this line, it is seeking the microcomputer's attention. The 6800 completes its current instruction before reacting. It then checks the interrupt mask bit in the condition code register. This bit is set when the microcomputer is executing most service routines in response to front-panel changes or GPIB messages. If the bit is set, the request is ignored until the microcomputer completes the routine and resets the bit. If the bit is clear, the microcomputer sets the bit and then starts an interrupt sequence:

1. Push the contents of the program counter, index register, accumulators, and condition code register onto the stack, decrementing the stack pointer each time a byte is stored.

2. Set the interrupt mask bit and load the address stored at FFF8, the interrupt vector.

Note: 6800 addresses are given as hexadecimal numbers.

3. Execute the interrupt service routine that begins at the address read in step 2. This routine begins by interrogating the assemblies to find the one that pulled down on the interrupt request line. It then proceeds to service that assembly.

4. At the end of the interrupt routine, return to the idle routine that occupies the microcomputer between tasks by retrieving the previous register contents from the stack.

Non-Maskable Interrupt (NMI). Tied high through a pullup, this interrupt is not used by the digital control system.

RESET. This input initializes the 6800 following powerup. The clock generator (U4035) holds this line low for about one second for 6800 start-up. After the input goes high, the 6800 begins its initalization routine at the address stored at FFFE and FFFF. This routine masks interrupts until it is ready to handle them. It then continues executing the operating program according to the flow chart in Figure 5-33.

6800 Address and Data Bus

The 6800 address outputs are buffered by U2035 and U3036; they are always enabled. The data i/o buffer, U1013, is normally enabled. If disabled by P1020, it isolates the 6800 from the microcomputer bus data lines for diagnostics. See further information about diagnostics under Address Decoders. The direction of data flow is set by the R/$\overline{W}$ line.

Address decoders. U2044 and U1037B drive address select lines and status lights for the microcomputer system. The address select lines are shown in Table 5-21.

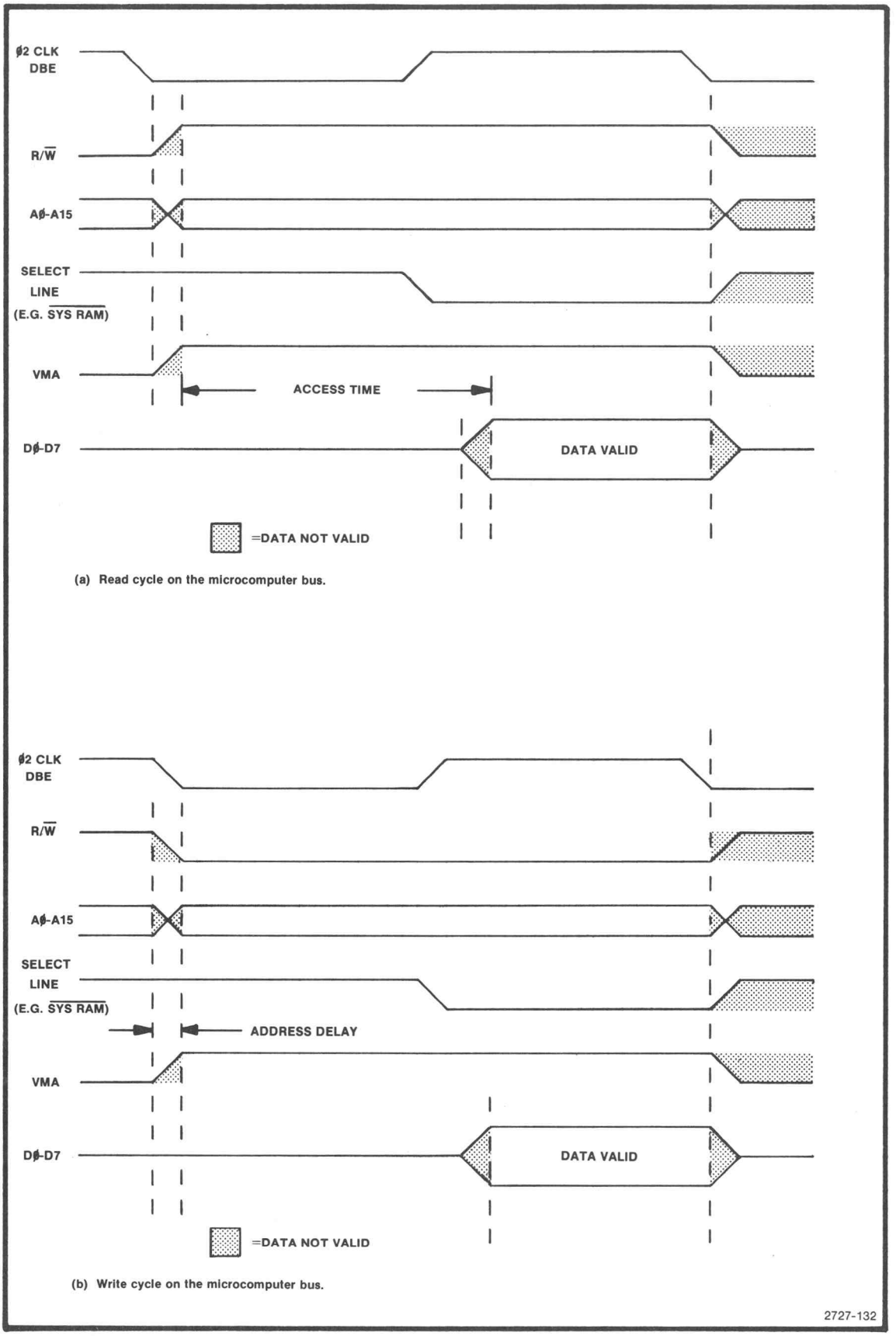

Figure 5-32. Read and write cycle timing on the microcomputer bus.

TABLE 5-21
ADDRESS SELECT LINES

Line	Selects	Address
SYS RAM	RAM on Memory board	0000-07FF
GPIB RAM	RAM on GPIB board	0800-0FFF
U1037B-12	Instrument bus	1000-11FF
GPIB	GPIA on GPIB board	1200-13FF
OPSW	Switch register on Memory board	1400-15FF

TABLE 5-22
492 MICROCOMPUTER ADDRESS SPACE

0000	System RAM
0800	GPIB RAM
1000	Instrument Bus Interface
1200	GPIA on GPIB board
I/O 1400	Options switch on Memory board
1600	Unused
1800	ROM on Memory board (Four 2K EPROM's)
3800	Unused
4000	ROM on GPIB board (B 2K EPROM's or 2 8K ROM's)
8000	ROM on Memory board (Four 8K sockets with 2K EPROM's or 8K ROM's)
FFFF	

Other addresses are decoded on the Processor board for diagnostics, turning on LEDs on some outputs of U2044. Dianostic routines can cause the 6800 to access an address that turns on an LED as a test indicator. For further information, see the self-test instructions in the Maintenance section (Vol. I of this manual).

ROM addresses on the Memory board and the GPIB board are decoded there and do not rely on address select lines from the Processor board.

U2044 is enabled by VMA and zeros on A15 and A14 (3FFF and below). It decodes the 3-bit binary input of A11, A12, and A13 to assert one of eight outputs (Y6 and Y7 are unused).

U1037B is enabled when U2044 decodes an address in the range 1000—17FF and decodes A9 and A10 to assert one of four outputs.

Address Map

Microcomputer memory is mapped in Table 5-22 (addresses in hexidecimal).

Instrument Bus Interface

The microcomputer communicates with the rest of the instrument over the instrument bus (with the notable exception of the GPIB interface). Peripheral interface adaptor (PIA) U3022 is programmed to send addresses and send or receive data on the instrument bus. It also handles control lines for writing to and reading from registers on the instrument bus. It does not, however, handle service requests; the SER REQ line goes direct to the 6800.

The PIA is reset at power-up and the 6800 then programs it for each of its tasks. How the 6821 PIA is configured in the the 492 microcomputer system is shown in Figure 5-34.

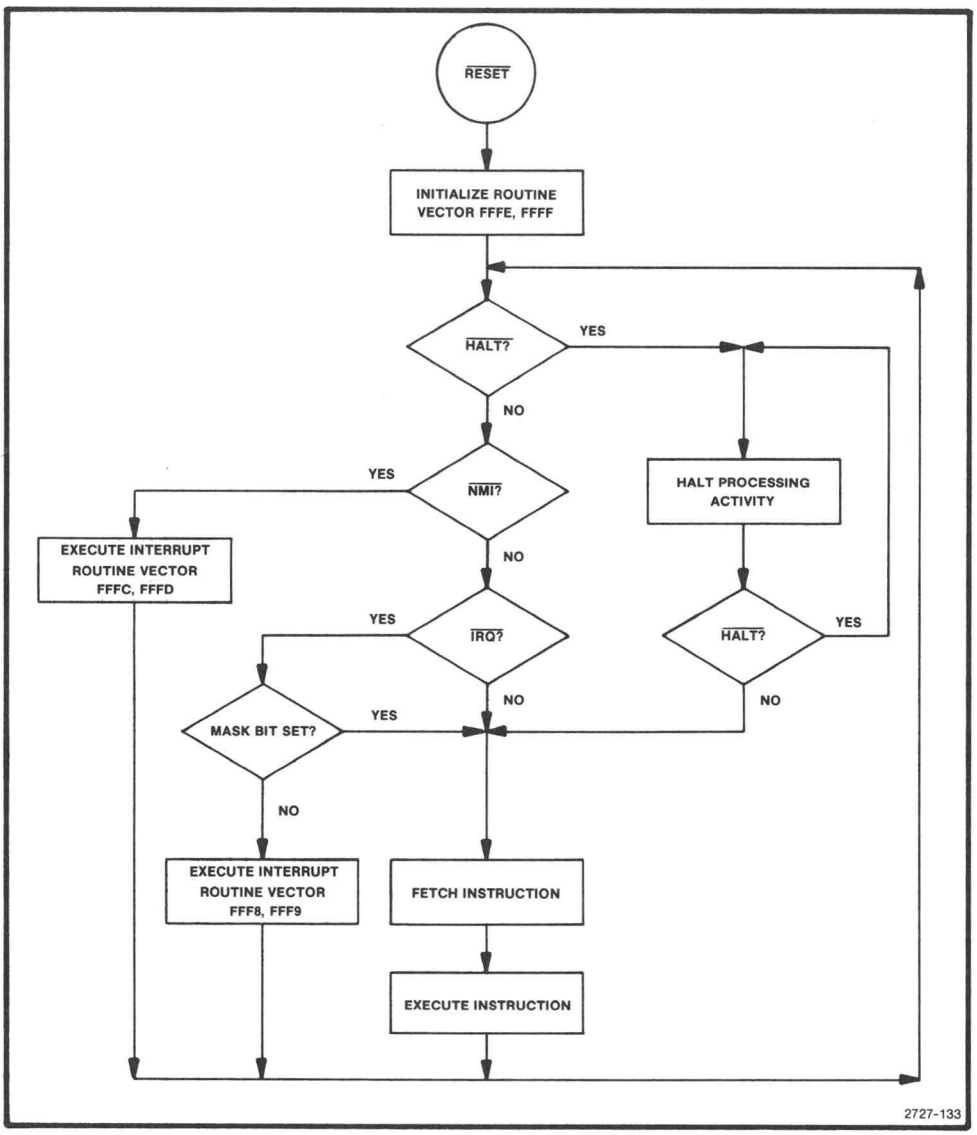

Figure 5-33. Flow chart of the 6800 main decision paths.

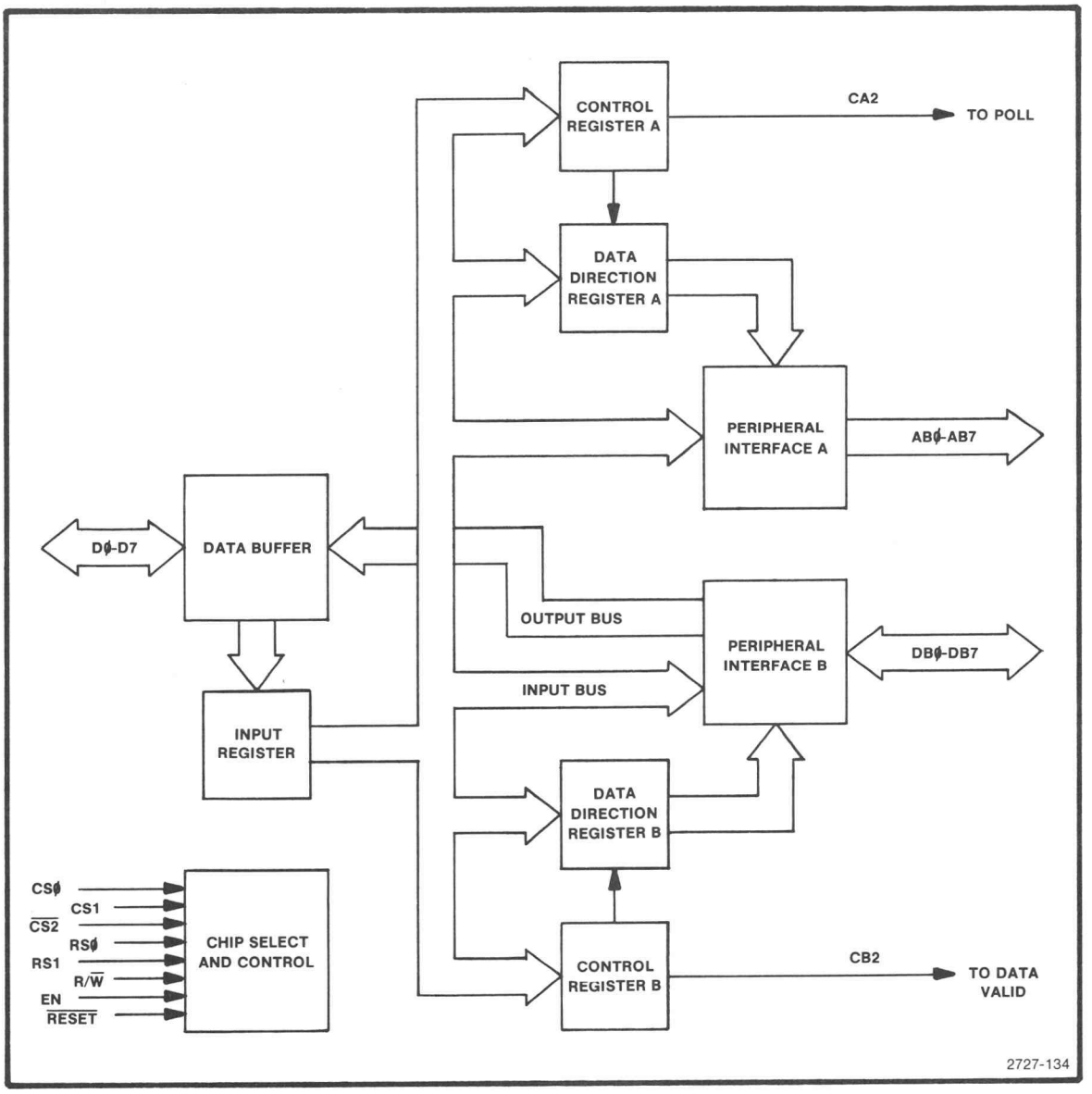

Figure 5-34. 6821 PIA registers and control lines.

Chip Select. Chip select lines CS0 and CS1 are always enabled; the 6800 selects the PIA by addressing 1000, which asserts CS2. Data transfers are then performed under control of the read/write, register select, and enable signals.

Register Select. Four registers and two peripheral interfaces are addressable. The 6800 selects one by a code on RS0 and RS1 (the two LSBs of the PIA address) and by setting or clearing bit 2 in the appropriate control register as shown in Table 5-23.

Read/Write. The 6800 sets the direction of data through the data buffer with R/$\overline{W}$. When the 6800 sets this line low, it enables the input register. A high enables input to the 6800 from the PIA internal output bus.

Enable. The Φ2 clock high pulse transfers data to the input register and enables one of the peripheral interfaces (if addressed) on a write cycle.

Data Direction Registers. These registers allow the MPU to control the direction of data on each line connected to the peripheral interfaces. A zero (0) configures the corresponding data line as an input; a one (1) configures it as an output.

Control Registers. The 6800 uses bit 2 of these registers for addressing as explained above. Bits 3, 4, and 5 form a code to control CA2 and CB2 as outputs on the instrument bus. CA2 is configured as POLL to enable a parallel poll on the instrument bus. CB2 is configured as DATA VALID to strobe data into an addressed register during a 6800 write to the instrument bus. It is also

TABLE 5-23

PIA REGISTER AND INTERFACE SELECT CODES

RS1	RS0	Control Register Bit CRA-2	CRB-2	Register or Interface
0	0	1	X	Peripheral Interface A
0	0	0	X	Data Direction Register A
0	1	X	X	Control Register A
1	0	X	1	Peripheral Interface B
1	0	X	0	Data Direction Register B
1	1	X	X	Control Register B

asserted on 6800 reads to enable the data buffer. The RC delay following inverter U1013B provides data settling time on the bus before DATA VALID goes high. U1013B's open-collector output pulls down faster than R1024 pulls up, so DATA VALID's low-high transition is delayed compared to its high-low transition.

Peripheral Interface A. PA0-PA7 are configured as outputs to drive the instrument bus address lines. The 6800 writes to this interface to address a register on the instrument bus.

Both the A and B interface buffers are disabled if an external controller pulls the INTL CONT line low. They are also disabled if P1020 is disconnected for diagnostic purposes. Either releases the low on the output of U1037A. The interrupt line buffer, U3043A, is also disabled. These buffers for the address, data, and interrupt lines then decouple the 6800 from the instrument bus.

The MSB of the address determines the direction of data through U3016, the data lines buffer. Instrument bus addresses 80 and above set U3016 to buffer data from the instrument bus to the PIA (6800 read); addresses 7F and below set U3016 to buffer data in the opposite direction (6800 write).

Peripheral Interface B. PB0-PB7 are configured either as inputs or outputs to transfer data from or to the instrument bus. The 6800 writes data to this interface to send it to a register on the instrument bus and reads data from this interface when it interrogates a register on the instrument bus.

Pull-ups on the data lines result in all ones if a read cycle inputs a byte when no instrument bus register is enabled.

The RC delay in the enable signal for buffer U3016 slows the low-high transition at the input of the Schmitt trigger, but has little effect on the high-low transition. This holds the instrument bus data lines stable while DATA VALID is going false, but has little effect when the data lines are to be driven at the beginning of a write cycle.

Instrument Bus Registers

Instrument bus address lines are split into a right bus and a left bus for economy in address decoding. On the right bus, a board with an addressable register need only decode AB0 through AB3 and AB7; on the left bus, a board need only decode AB4 through AB7. In both cases, AB7 indicates read (high) or write (low), as it does for the instrument bus interface data buffer noted above. The microcomputer communicates with the following registers to control assemblies as shown in Table 5-24.

Instrment Bus Data Transfers

Data transfers on the instrument bus require two steps: the 6800 writes the address to peripheral interface A and then reads or writes the data through peripheral interface B.

When the 6800 writes to the instrument bus, it configures the PIA to pulse DATA VALID (the CB2 output). The PIA does this automatically after data is written to peripheral interface B as shown in Figure 5-35.

TABLE 5-24
INSTRUMENT BUS REGISTER ADDRESSES

Register	Circuit Board	Write	Read
Right Bus			
Tune control data	Center Frequency Control	70	F0
Data steering	Center Frequency Control	71	
1st LO driver control	1st LO Driver	72	
1st LO phase lock control	Phase Lock Control	73	F3
Front panel LEDs	Front Panel	74	
Front panel encoders	Front Panel		F4
Span magnitude data	Span Attenuator	75	
Span magnitude and decade attenuator data	Span Attenuator	76	
Control data	Preselector Driver	77	
Option configuration	Preselector Driver		F7
Post VR gain	Log & Video Amplifier	78	
Video display mode/gain	Log & Video Amplifier	79	
Digital storage data	Vertical Digital Storage	7A	FA
Digital storage control	Vertical Digital Storage	7B	
Video level/filter/blank	Video Processor	7C	
Left Bus			
Sweep rate and mode	Sweep	0F	
Holdoff, interrupt, trigger	Sweep	1F	
Crt readout data	Crt Readout	2F	
10 MHz IF gain and bw	VR Motherboard #2	3F	
Z-axis & RF deck control	Z-Axis/RF Interface	4F	
Crt readout control	Crt Readout	5F	

When the 6800 reads from the instrument bus, it does not configure the PIA to pulse DATA VALID as it does for a write cycle. Rather the 6800 writes to control register B to set CB2 low. CB2 low asserts DATA VALID, after the RC delay allowing for the data to be accessed, and the 6800 then reads the data through peripheral interface B. After reading the data, the 6800 writes again to control register B to unassert DATA VALID.

Instrument Bus Poll

When the 6800 recognizes an interrupt request ($\overline{\text{SER REQ}}$ asserted), it enters a service routine. As part of this routine, it performs a parallel poll to find who is requesting service. A parallel poll sequence is shown in Figure 5-36.

The 6800 begins by writing an invalid address on the instrument bus, FF; all address decoders on the bus ignore this address. Next, the 6800 writes to control register A to set CA2 high, asserting POLL. All boards that respond to a poll recognize this line and contain logic that either responds or prepares to respond when the 6800 causes DATA VALID to be asserted. Each interrupt is assigned a data line as shown in Table 5-25. The board originating that interrupt pulls low on the corresponding line.

After the 6800 reads the status byte, it clears POLL and writes address 7F on the instrument bus. The transition on POLL disables the poll response circuitry of boards on the instrument bus. Since 7F is also an invalid address, it also unaddresses all instrument bus registers. The

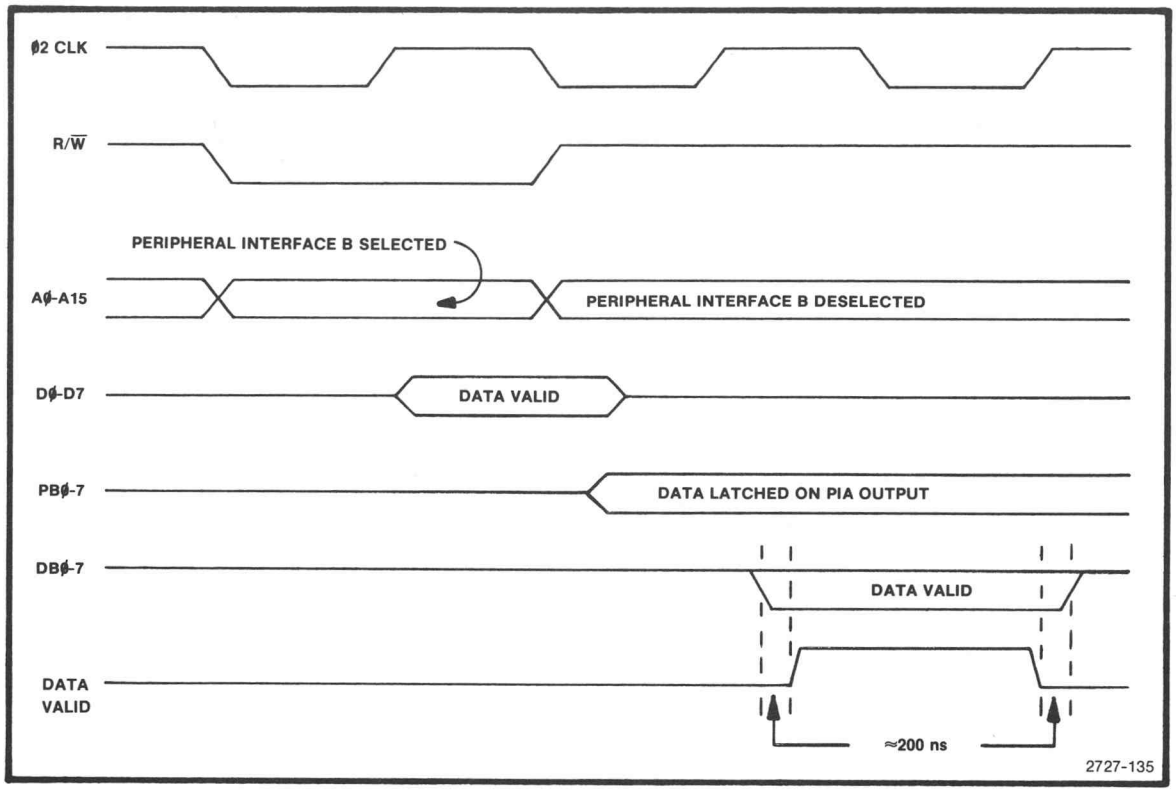

Figure 5-35. A 6800 write to the instrument bus.

following positive transition on POLL prepares all parallel poll boards, so when the 6800 writes back the parallel poll byte, it clears all interrupts that were read.

The 6800 reads the interrupt status of the GPIA on the GPIB board separately and combines it with the instrument bus status before servicing the interrupt(s). Interrupts are serviced according to their priority.

MEMORY BOARD 32

The Memory board holds the ROM operating program for the microcomputer and the RAM used by the program. It also holds a bank of switches that the microcomputer can read to configure itself for options and diagnostics.

TABLE 5-25
PARALLEL POLL BYTE

7	6	5	4	3	2	1	0
X	X	X	End-of sweep	Center frequen-cy knob	Phase lock	X	Front panel encoder

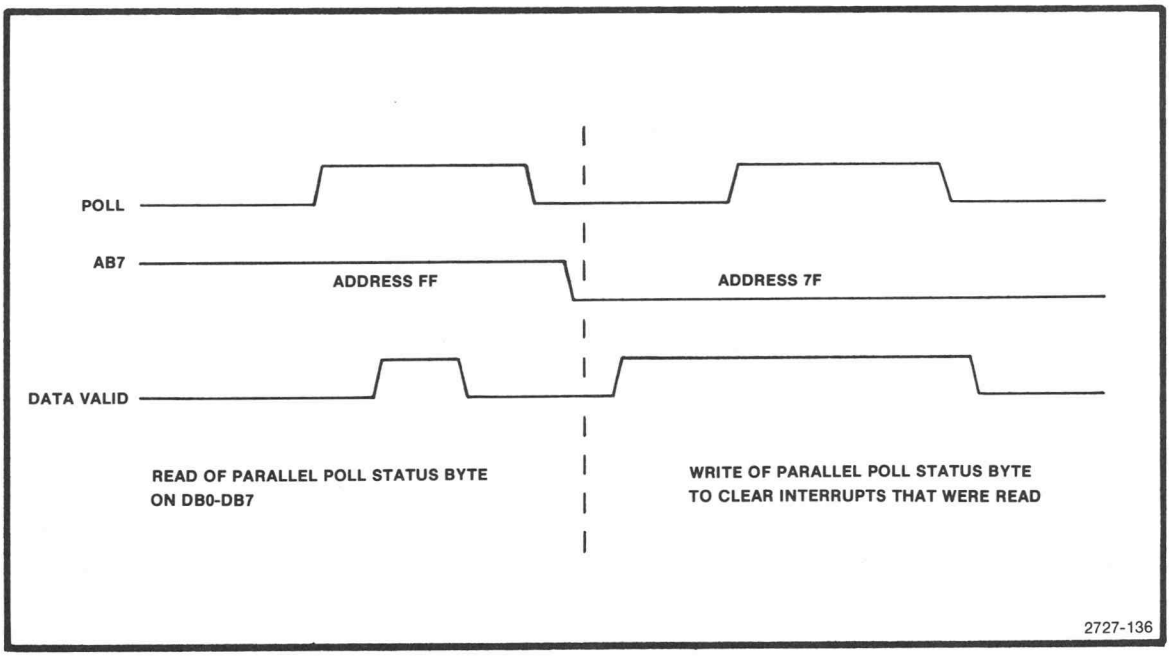

Figure 5-36. Instrument bus poll sequence.

ROM Address Decoding

The full microcomputer address bus extends to this board for ROM address decoding. U1036 and U1038 decode banks of addresses and assert one-of-eight ROM chip-enable lines when a bank that corresponds to one of the ROMs is addressed. The decoders are enabled by VMA and R/$\overline{W}$ high (a valid address during a read cycle). U1036 also requires A15 be low to be enabled; if enabled, it decodes addresses in the range 1800 to 3800 from the binary code formed by A11 through A13.

Since U1038 alone responds to the upper-half of address space, it need not decode addresses further than A13 through A15. The four ROMs in this address space, however, are strapped to treat the enable and the upper address bits differently if 8K rather than 2K chips are installed. For 8K, the decoded enable lines drive the chip-enable inputs and the upper address bits (A12 and A11) are decoded by the chip. For 2K, the decoded enable line, rather than A11, drives pin 18, and a logic one, rather than A12, is applied to pin 21; pin 20 is grounded. The decoder responds to ϕ2 CLK so the enable lines are clocked for the benefit of 8K ROMs, which recognize a new address only on the negative transition of $\overline{CE}$.

RAM

Data words in RAM are divided between the two 1k X 4 ICs; U2032 holds the upper four bits and U2035 holds the lower four bits. Both are selected by SYS $\overline{RAM}$ and the phase-two clock, while R/$\overline{W}$ sets the data direction.

Option Switch Register

The microcomputer accesses U1033, a buffer enabled by $\overline{OPSW}$, to read S1033 at power-up. Switch 1 indicates option 8 (open) or non-option 8 (closed). Switches 2 through 6 indicate internal hardware configuration. Switches 7 and 8 call self-test routines. For the correct use of switches 2 through 8, refer to the Maintenance Section in Volume I of this service manual.

FRONT PANEL 30

The Front Panel board translates an operator action changing a front-panel control into data for the microcomputer to read and implement. The board, in turn, accepts data from the microcomputer to display on LEDs so the opperator is informed of the current operating modes of the instrument. Some analog control signals are also derived from potentiometers on this board.

Pushbutton switches and some rotary switches are wired in a matrix that is read by a keyboard encoder; this is the main switch encoding block. A power-up circuit prompts the encoder to output the initial value of the rotary switches. The FREQUENCY control drives a separate up/down encoder. Each encoder interrupts the microcomputer when it senses a change and transmits its data through the instrument bus port.

The LED display inputs data through the instrument bus port and strobes it into shift registers that drive the LEDs.

Instrument Bus Port

The instrument bus port comprises an address decoder, an output path for the encoders, and an input path to the bank of LED driver shift registers. The output and input paths appear as registers on the instrument bus.

Address Decoding. The data and enable inputs to U4031 select output Y2 when the microcomputer places address 74 on the instrument bus and output Y6 for address F4. These addresses correspond to the input and output paths through the port:

Hex address	Data path
Hex address	Data path
74	Input to LED display shift registers & power-up circuit
F4	Output from keyboard and FREQUENCY encoders

Input. DB0, DB1, DB2, and DB4 provide the inputs to shift registers U2045, U3030, U5045, and U6075. The microcomputer writes to this input port eight times to fill the shift registers, which drive the front-panel LEDS. The MSB of U6075 drives the graticule light circuit.

DB3 drives the power-up circuit.

Output. DB0 through DB6 represent the 7-bit code from the keyboard encoder. The code corresponds to one of the positions shown in Figure 5-39 under Switch Matrix that follows. The X-Y position of the switch can be decoded from the 7-bit code as a decimal number in which the first digit is X and the rest of the number is Y. To obtain the number:

1) Convert the binary code to decimal. 2) Add 1 to the first decimal digit and 1 to the second digit.

For example:

1) Binary 0011101 is converted to decimal 29. 2) 1 is added to the first digit—2, and 1 is added to the second digit—9, for X=3 and Y=10—the FINE button.

DB7 represents the direction of change in the FREQUENCY control (see FREQUENCY Encoder that follows).

Buffer U1047 is enabled only when when the output path is addressed.

Switch Encoding

A keyboard encoder, U3039, scans the switch matrix continuously and compares any switch closures it senses with those sensed during the last scan. Any new closure causes the encoder to request service so the microcomputer can read the code for the switch.

How the encoder scans the matrix is illustrated in Figure 5-37. By asserting X1 through X8 in turn, the encoder accesses a column of switches. It senses the state of each switch in that column on Y1 through Y10.

Encoder Logic. The logic inside the keyboard encoder that scans the matrix, senses switch closures, handles the bookkeeping for which switches changed, and outputs the code for new closures is shown in Figure 5-38.

The keyboard encoder is clocked by a 555 timer, U1011. The clock drives the Y counter, which causes the key sense logic to present the status of each of its inputs, Y1 through Y10, sequentially to the control logic. These inputs represent the state of a column of switches in the switch matrix. The control logic continuously shifts through the shift register to compare the input from the

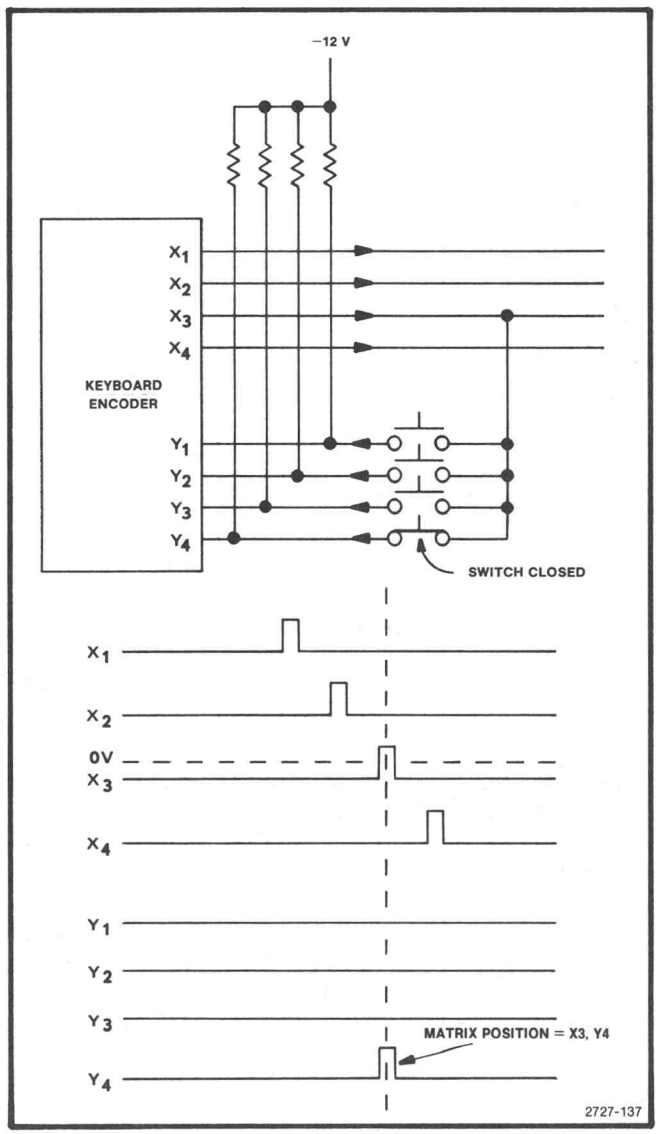

Figure 5-37. Scan by simplified keyboard encoder.

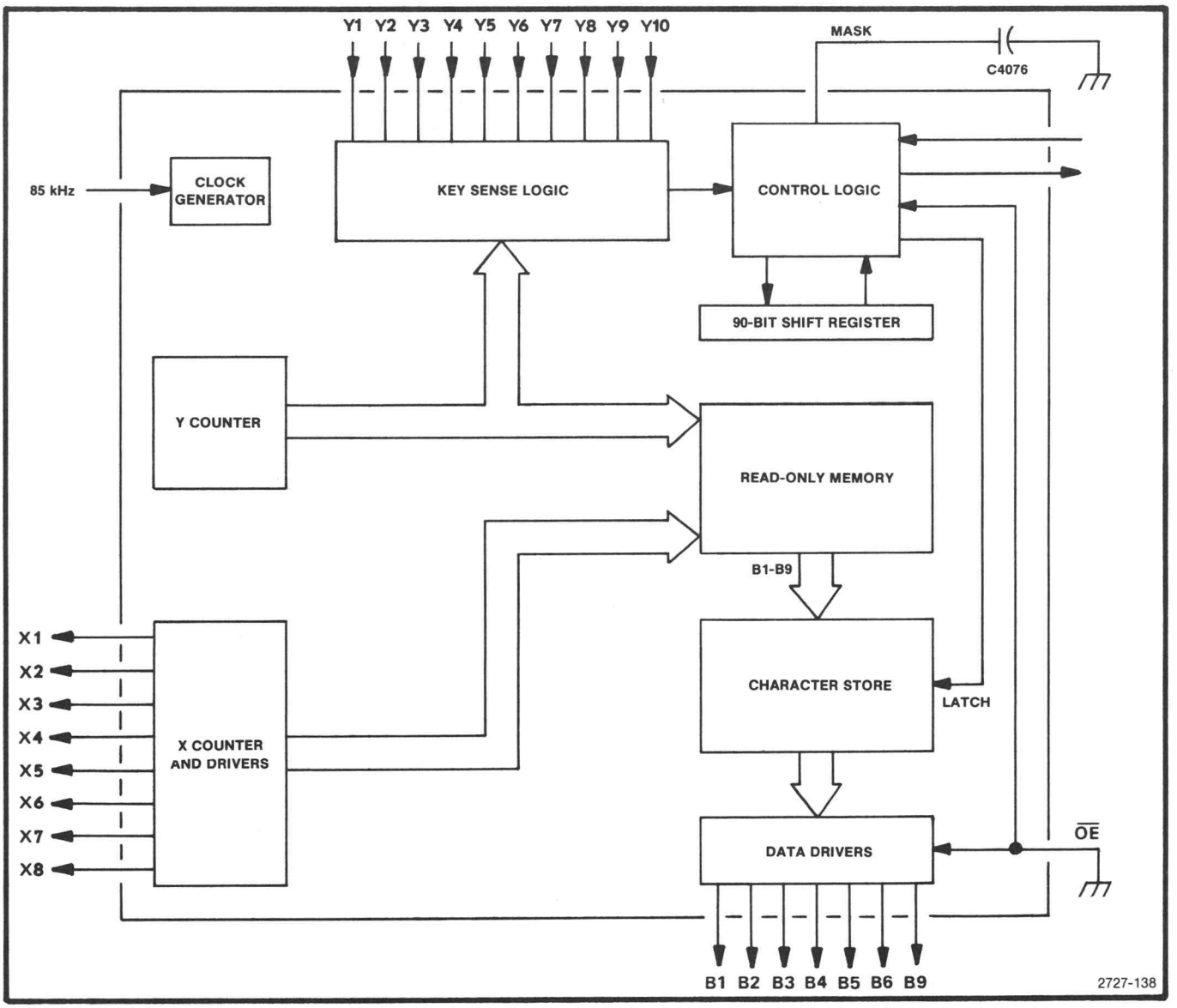

Figure 5-38. The keyboard encoder.

key sense logic to the value last stored for the switch represented by that input. When a scan of the column is finished, the X counter advances so the next column is scanned.

When the control logic detects a difference between the input and a bit in the shift register, it activates the debounce mask, its latch output, and the encoder strobe output. The mask signal holds off action by the control logic so the encoder doesn't see multiple switch closures caused by switch bounce. The mask time is controlled by C4026. The latch output causes the character code in read-only memory addressed by the X and Y counters to be entered in the character store. The encoder strobe output activates the encoder interrupt interface to request the microcomputer's attention.

Switch Interrupt Interface

The encoder strobe output is level-controlled by the switch interrupt interface. When the encoder asserts its strobe output (high), it causes U3014C to pull down on $\overline{\text{SER REQ}}$; the strobe high also releases the preset input to U2018B, which was holding the keyboard encoder strobe control input low. Since the encoder is waiting for a low-to-high transition on this input to stop asserting its strobe output, $\overline{\text{SER REQ}}$ remains asserted.

When the microcomputer responds to the interrupt, it learns that the keyboard encoder requested service from DB0, the encoder's parallel poll bit. DB0 is set low by U3014E at the same time $\overline{\text{SER REQ}}$ is asserted. The microcomputer ends its poll sequence by clearing all interrupts it has read. It does this by first setting AB7

low, disabling U3014E so it can not continue to assert DB0. The micrcomputer then writes the parallel poll byte back on the instrument bus; if the encoder was requesting service, the low on DB0, when written back, is clocked into U2018B when POLL is removed by the microcomputer. The output of U2018B then cancels the encoder strobe with its low-to-high transition.

Switch Matrix. The switch matrix includes both momentary contact and rotary switches. One side of each switch is connected to −12 volts through a resistor in parallel with a Y input. The other side of the switch is connected in parallel with the other switches in the column to an X output.

When an X output is asserted, the Y inputs remain at a negative voltage unless a contact is closed. If the contact is closed, the X output raises the Y input for that switch to a positive voltage. Rotary switches occupy as many positions in the matrix as they have contacts. The swtiches are wired to yield the codes shown in Figure 5-39.

Rotary switches for RESOLUTION BANDWIDTH and SPAN/DIV are a special case. Although each occupies four positions in the matrix, the two are used only as up/down prompts to the microcomputer to change the corresponding parameter. The microcomputer notes the initial setting and changes the parameter accordingly when the switch is moved, keeping track of the direction the switch was changed by comparing its new position to its old.

Power-up Circuit. When the microcomputer performs its power-up routine, it writes a one in bit 3 at address 74; because this bit is not latched, the microcomputer continues to write a one in the bit while the keyboard encoder is initialized.

The keyboard encoder is initialized by setting to zero the bits in the shift register that represent the rotary switches.

This happens because:

1) Writing a one to bit 3 sets both inputs of U3012A high, turning off Q6028.

2) Q6028 off allows −12 volts to be applied through R6028 to the rotary switch X inputs. This overrides the keyboard encoder X scan signals, so the Y inputs remain low without regard to the position of the switch.

3) Because the microcomputer continues to write a one in bit 3, the keyboard encoder is given enough time to update its shift register with all zeros representing the rotary switch contacts.

After the keyboard encoder is initalized, the microcomputer resets bit 3. This restores the switch matrix to normal operation, and the keyboard encoder reads the position of the rotary switches as changes in the switch matrix. It outputs these apparent changes to the microcomputer, which interprets them as the power-up values for TIME/DIV and MINIMUM RF ATTENTUATION and the inital switch position for REFERENCE LEVEL, FREQUENCY SPAN, and RESOLUTION BANDWIDTH.

FREQUENCY Encoder

The center frequency control is a rotary switch that generates a gray code. It is decoded as shown in Figure 5-40.

Up/Down Encoding. The gray code changes one bit at a time, causing U6025A to change state for each position change of the switch. This pulses a low on the input of either U5025B or U5025C (the other input remains high), making the inputs to U6025B momentarily unequal. As a result, U6025B pulses the set input of U4015B to assert $\overline{\text{SER REQ}}$.

The same pulse is inverted to clock the up/down flip/flop, U4015A. This flip/flop records the direction of change in the switch, determined by the exclusive-OR of the previous state of B and the current state of A. The trailing edge of the pulse from U6025B updates U2018A to remember the current state of B for the next cycle.

Exclusive-OR U6025D detects the direction of change in the FREQUENCY control because of the property of the gray code. Down (ccw) yields unequal inputs when the previous state of B is commpared to the current state of A, while up (cw) yields the opposite. The up/down condition is clocked into U4015A and is read by the microcomputer as the MSB of the output port.

FREQUENCY Interrupt Interface

In its quiescent stage, U4015B is held cleared by the feedback from its Q output to its clear input. a low on its set input temporarily forces U4015B to set both its output high, allowing the low on the set input to set the flip/flop. When set, U4015B asserts SER REQ and drives U3014F to assert DB3 when the microcomputer performs a poll. U3014F is enabled during a poll as noted above for interrupts under Switch Encoding. U4015B is cleared (if it was asserting DB3) when the microcomputer writes back the parallel poll byte to clear all interrupts that were read.

Potentiometers

Some controls generate analog signals used by other functions in the instrument. These controls are nonprogrammable.

INTENSITY is an input to the Z Axis/RF Interface Board to control trace brightness.

PEAK/AVERAGE is a digital storage input that causes signals to be peak-detected above and averaged below a display line that tracks this control.

	TIME/DIV < X1	>< X2	>< X3	>< X4	>< X5	>< X6	MIN RF ATTEN >< X7	>< X8 >
Y1	20 μs 00	50 ms 0A	EXT TRIG 14	INT TRIG 1E	READOUT 28	0dB 32	SPAN 3C	REF 46
Y2	50 μs 01	.1 s 0B	SINGLE SWEEP 15	FREE FUN 1F	GRAT ILLUM 29	10 dB 33	DIV 3D	LEVEL 47
Y3	.1 ms 02	.2 s 0C	B-SAVE A 16	SAVE A 20	FUTURE USE 2A	20 dB 34	3E	48
Y4	.2 ms 03	.5 s 0D	2 dB/ DIV 17	LIN 21	MAX HOLD 2B	30 dB 35	3F	49
Y5	.5 ms 04	1 s 0E	VIEW B 18	NARROW FILTER 22	BASE-LINE CLIP 2C	40 dB 36	40	
Y6	1 ms 05	2 s 0F	10 dB/ DIV 19	WIDE FILTER 23	ΔF 2D	50 dB 37	RESOLUTION 41	
Y7	2 ms 06	5 s 10	DEGAUSS 1A	VIEW A 24	CAL 2E	60 dB 38	BW 42	
Y8	5 ms 07	AUTO 11	MIN NOISE 1B	PHASE LOCK 25	AUTO RES 2F		43	
Y9	10 ms 08	MNL 12	FREQ RANGE 1C	FREQ RANGE 26	PULSE STETCH-ER 30		RESET TO LOCAL 44	
Y10	20 ms 09	EXT 13	FINE 1D	IDENTIFY 27	EXT MIXER 31		LINE TRIG 45	

SWITCH NAME OR POSITION

LIN

21

HEX CODE

2727-139

Figure 5-39. Switch matrix codes.

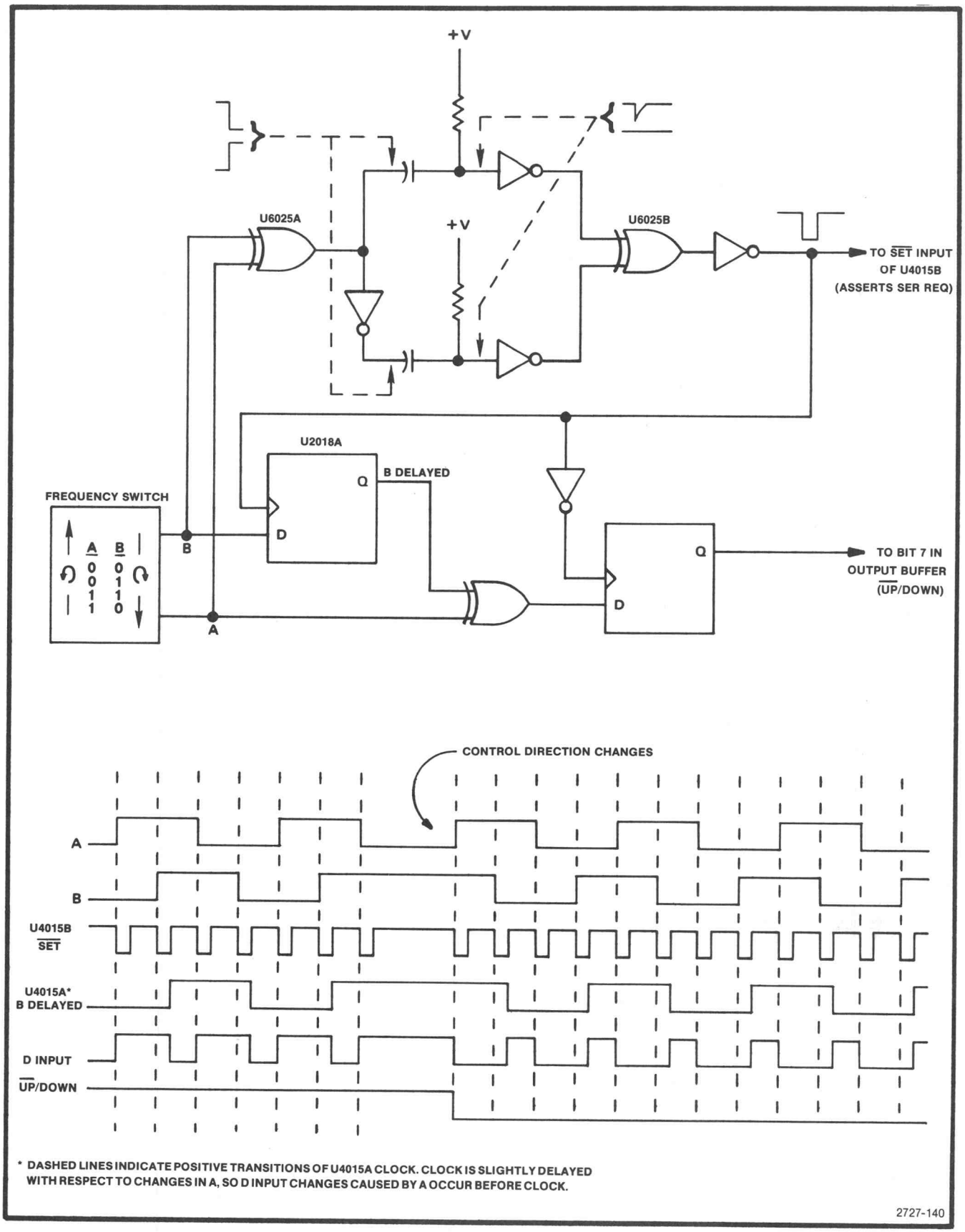

Figure 5-40. Frequency control encoder timing.

MANUAL SCAN varies the horizontal position of the sweep in manual sweep mode.

POSITION centers the sweep and vertical deflection on the crt.

LOG CAL varies the video signal level prior to the Video Processor board.

PEAKING controls front-end response of the analyzer by fine-tuning the internal preselector or varying the bias of an external mixer.

AMP CAL adjusts 10 MHz IF gain.

ACCESSORIES INTERFACE BOARD 47

The Accessories Interface board provides access to the instrument bus and connection for two analog signals. The instrument bus access may be used for diagnostics; it may also be used by future accessories.

The analog signals are an input, EXT VID IN, and an output, EXT PRESEL. To display an external signal applied to EXT VID IN, place a TTL low on $\overline{\text{EXT VID SEL}}$. EXT PRESEL can drive an external preselector for use with an external mixer; it is available only with option 1 and is valid only in preselector bands (1.7 GHz to 21 GHz). This signal tracks the instantaneous frequency at a nominal 2.1 GHz/volt with zero output corresponding to 2.072 GHz.

The instrument bus is buffered and brought out to the rear panel with the lines named to indicate their relation to the internal bus: ADV for DATA VALID, APOLL for POLL, etc.

Two lines are added to define the 492/external device interface. One, INTL CONT, is asserted low by an external controller to disable the internal microcomputer's instrument bus buffers. This sets the address lines buffer, U2033, and control lines buffer, U2015, to drive the address, DATA VALID, and POLL lines and listen to SER REQ. It also sets U2038 to indicate the direction of data through the data lines buffer, U2025, depending on the sense of the MSB of the address—AB7. When INTL CONT is low, it sets U2038 to drive the buffer in a manner similar to the Processor board data buffer—a write to the internal bus if AB7 is low and a read if AB7 is high. When INTL CONT is high, the buffer is enabled to write to the external bus when AB7 is low and read when AB7 is high.

The other line is asserted low by an external device to enable the data buffer. As long as this line, DATA BUS ENABLE, is unasserted, the data buffer is set to its high-impedance state and the data direction input has no effect on its output.

10 MAIN POWER SUPPLY AND FAN DRIVER

The Main Power Supply furnishes all the regulated voltages for the 492, except for the crt high-voltage supply. In order to reduce total weight and conserve energy, the Main Power Supply is of the high-efficiency design. The power supply consists of the line input circuit, which rectify and filter the incoming line voltage; the inverter, which drives the primary of the power transformer; the rectifier-filter circuits, which rectify and filter the secondary voltages; the voltage reference circuit which furnishes a stable and precise reference for the regulators; the regulator circuits, which control the voltage and current for the supplies that require precise regulation.

The Fan Driver board houses the Fan Driver circuit, which furnishes the appropriate drive current for the fan motor. It also contains the Over-voltage Protection circuit, which shuts down the +5 volt supply in case of overvoltage. Refer to Diagram 43.

MAIN POWER SUPPLY 42 43

Line Input Circuits

Power is applied through line filter FL301, then through the line fuse and additional normal mode/common mode EMI filtering to the power switch, from where it is sent through line selector connector J1091. The line filter prevents power line interference from entering the power supply and internally generated signals from radiating out the power cord.

Line selector connector J1091 permits the instrument to operate from either 115 volt nominal or 230 volt nominal line voltage source. When J1091 is in the 115 volt position (pins 1 and 2), rectifiers CR3096 and CR4094 operate in conjunction with energy storage filter capacitors C6101 and C6111 as a full-wave doubler; thus, the voltage across the two capacitors is the peak-to-peak value of the line voltage. When J1091 is in the 230 volt position (pins 2 and 3), CR3096, CR4095, CR3098, and CR4094 operate as a bridge rectifier. As a result, the output voltage applied to the inverter is about the same for 115 volt or 230 volt operation.

Thermistors RT2093 and RT2097 limit current surge to the supply at turn-on. After the analyzer is in operation, the current demand drops, the resistance value of the thermistors drops, and they have minimum effect on the circuit.

Because C6011 and C6101 discharge very slowly hazardous potentials exist within the power supply for

several minutes after the power switch is turned off. A relaxation oscillator, formed by C5113, R5111, and DS5112, indicate the presence of voltages in the circuit until the potential across the filter capacitors is below 80 volts.

S2103 is a thermal cutout switch that opens if the interior of the instrument reaches 103 degrees C. It prevents overheating in case the cooling fan fails.

E1094 and E2095 are surge voltage protectors. When the line selector switch is in the 115 volt position, only E1094 is connected across the line input. If a peak-voltage surge in excess of 230 volts occurs across the input, or if the instrument is accidently connected to a 230 volt source, E1094 will break down and demand enough current to open the line fuse. When the instrument is operated with the line selector at 230 volts, E1094 and E2095 operate in series to protect the input against line surges of about 460 volts peak.

The voltage for the line trigger source is taken off the input circuit just past S2103. It is coupled through C3085 and C3089 then off the board to the Sweep circuit to provide instrument triggering at line frequencies. The voltage at the top of R6093 is about two volts peak-to-peak.

Inverter Circuit

The inverter consists of several stages: A multivibrator that produces a square-wave signal to drive the ramp generator and the inverter logic circuits. The ramp generator produces a low-level sawtooth ramp that is applied to the primary regulator circuit. The inverter logic circuits control the duty cycle of the inverter driver, and thus the inverter output stage. The primary regulator compares the +17 volt supply output with a reference voltage, and gates the inverter logic circuits off and on to control the inverter duty cycle and thus the effective primary voltage. The inverter driver stage amplifies the signal from the inverter logic circuit and drives the output stage. The output stage consists of two power switching transistors that drive the primary of the main power transformer, T4071.Primary overcurrent sense and soft start circuits add protection.

Multivibrator. U6059, a low power 555 timer, is a multivibrator that operates at about 66 kHz and 80% duty cycle. Oscillator frequency is adjusted by R6061. The output square-wave signal is applied through R6052 to the primary of T6044 in the ramp generator, and directly to U6053, U6063A,U6063B,and U6069.

Ramp Generator. This circuit consists of T6044, Q5023, Q6034, and Q5032, and surrounding components. The circuit is a gated sawtooth generator that operates as follows: The negative excursion of the square-wave signal from Q6056 is coupled across T6044, forcing Q6034 into conduction. This forward-biases Q5032 and its collector moves toward +17 volts, charging C5038 to this value. Shortly thereafter, Q6034 loses drive (since the pulse coupled across T6044 has died away) and the two transistors cut off. Q5023 acts as a constant-current drain to discharge C5038 linearly. This signal is coupled across divider R5036-R6032 then applied through C6039 to the input of comparator U6036, part of the primary regulator.

Primary Regulator. This circuit consists of comparator U6036 and U6046, photocoupler U6043, and related components. The circuit varies the duty cycle of the driving signal for the inverter, as follows: The $+17V_1$ voltage is divided by R6038 and R6037 to about +4.8 volts, and applied to the inverting input of U6036. The +5 volt reference is applied through R6022 to the non-inverting input of U6036, where it is combined with the ramp signal from the ramp generator stage. The non-inverting input thus receives a sawtooth signal of about 500 millivolts peak-to-peak imposed on a +5 volt dc level. This is compared with the +4.8 volts on the other input, so the comparator switches with each sawtooth cycle. Now, referring to Figure 5-41, note that as the level at pin 3 (which corresponds to +17 volt supply variations) rises and falls, the duty cycle of the output waveform varies also.

The signal from the output of U6036 is applied to U6043, an optical isolator. The output of this stage is then applied to the input of U6046, a comparator. The inverting input of this device is referenced at +2.55 volts, so the comparator switches at the crossing point. The purpose of the last two stages is to shift the dc level of the output signal of U6036 to CMOS levels to drive the inverter logic.

Inverter Logic. This stage consists of steering flip-flop U6063 and dual quad-input NAND gate U6069. The flip-flop is connected so it toggles back and forth and enables first one gate then the other. The square-wave signal from the multivibrator drives the clock input of U6063; the signal also enables each gate to ready it for the other signals that arrive later. Depending on the output state of U6063, either the upper or lower section of U6069 will be ready for the enabling signal. Assume for the moment that the Q output is holding pin 2 of U6069 high. This means that the complement output of the latch is holding the opposite side of the gate pair disabled. Now, when the output of U6046 moves high (U6046 controls the duty cycle of the Inverter), the upper section of U6069 produces a low state. This causes current to flow through half the primary and Q6078 only. On the opposite cycle of the multivibrator signal, the latch is reset, the lower half of U6069 is enabled, and Q6077 is in the conduction path.

Inverter Driver. The inverter driver consists of transistors Q6077 and Q6078, transformer T6081, and related components. This is a push-pull amplifier with diode protection in the collector circuits to prevent damage from voltage transients during operation. The drive signal is induced into the two secondary windings of T6081 and coupled to the output stage.

Output Stage. This circuit consists of transistors Q2071 and Q2061, series LC tank L1081-C1063, and transformer T4071. The output transistors are connected in a half-bridge configuration, converting the previous push-pull output to a single-ended configuration. The two

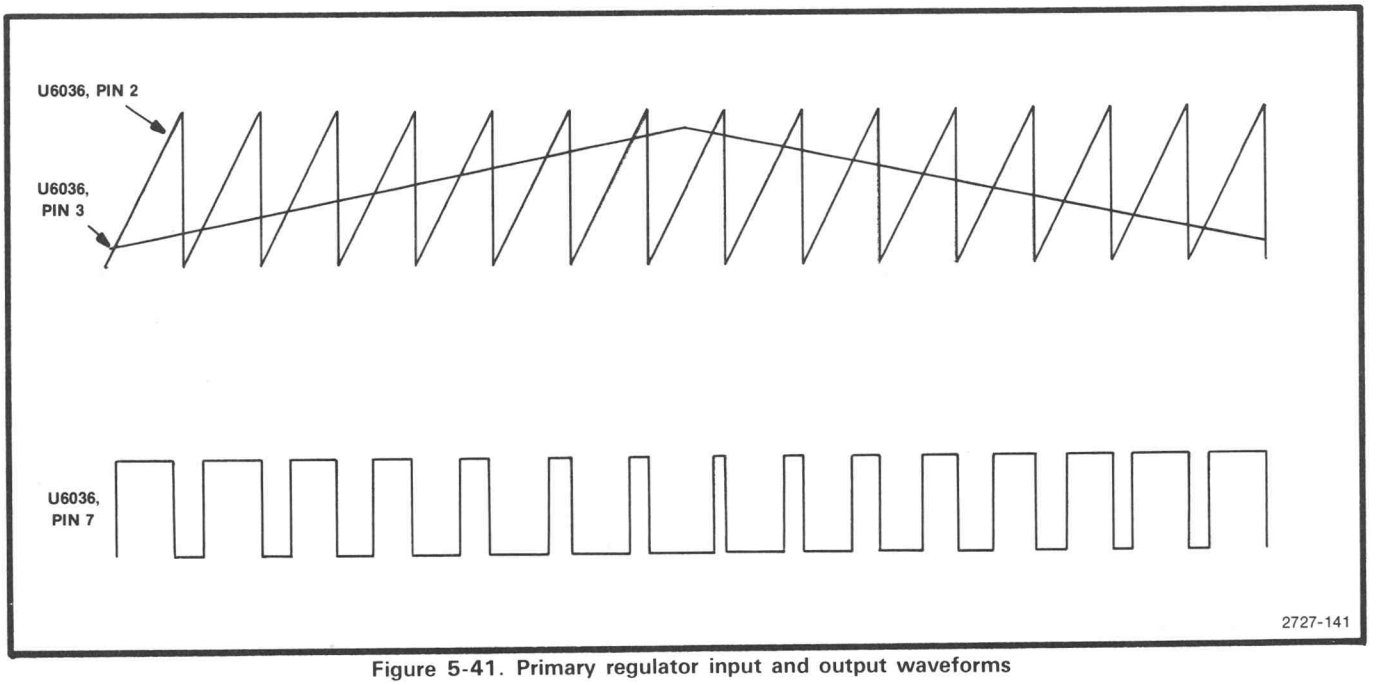

Figure 5-41. Primary regulator input and output waveforms (stylized).

transistors drive the series tank which acts as an energy storage element and an averaging circuit. Output transformer T4071 is driven by the tank circuit, and in turn drives the secondary circuts.

Primary regulation, as discussed previously, is accomplished by varying the duty cycle of the main switching transistors in the inverter driver. Maximum duty cycle occurs at low input line (90V) and fully loaded output. At maximum duty cycle, both transistors are off for only 20% of the period, or three microseconds. This short period allows any stored base charge to deplete, so there is no chance of both transistors conducting at once. Minimum duty cycle occurs at high input line (132V) and minimum loaded output. At minimum duty cycle, each transistor is off for about six microseconds, or 40% of the total period.

Soft-Start and Primary Overcurrent Circuits

The soft start circuit consists of U6053 and associated components. Soft start gradually increases the switching transistor's duty cyle at turn-on or after overcurrent shutdown. This prevents excessive transistor current due to charging output capacitors. Refer to Figure 5-42 for timing waveforms.

The primary overcurrent circuit protects against secondary shorts destroying the switching transistors. T2080 senses the collector current in Q2071 and creates a voltage on pin 5 of U6046B. If the bias on pin 5 surpasses the 2.5 V reference on pin 6, at about 5 amps through Q2071, the output of U6046B sets U6063A. U6063A is a D-type flip-flop used as a timer to shut down the inverter logic for about one second. U6063A also resets the soft-start circuit.

Rectifier-Filter Circuits

Transformer T4071 has three secondary windings: The first furnishes current to the +300 volt and +100 volt supplies; the second furnishes current to the −7V, +7V, and +9 volt supplies; and the third furnishes current to the +17V and −17 volt supplies. The regulated supplies (+5 volt reference, +5V, −5V, +15V, and −15 volts) derive their current from the rectifier-filter circuits.

The ac voltage from pins 7 and 8 of T4071 is applied to a bridge rectifier composed of CR3053, CR3056, CR3055, and CR3054. The output of this rectifier is filtered, then applied to the remainder of the instrument as the +100 volt supply.

The +300 volt supply is derived by stacking a 2X multiplier on the +100 volt supply. CR3053, CR1042, CR1034, and CR1022 compose this circuit.

The ac voltage from pins 9 and 10 supply current to full-wave rectifier CR4061-CR4062; its output is filtered and sent to the remainder of the instrument as the +9 volt supply. Two other taps off the same winding (pins 11 and 12) supply current to the bridge rectifier that consists of CR4063, CR4057, CR4053, and CR4065. The output divides across filter capacitors C3051 and C4051, to become the +7V and −7 volt supplies. The +7 volt supply is only used on the power supply board; the −7 volt supply is used by other circuits in the 492.

The third winding of T4071 is pins 13, 14, and 15, which furnish current to full-wave bridge rectifier CR5052-CR5062-CR5065-CR5055. The output of this rectifier is also divided to become the +17V and −17 volt supplies. The −17 volt supply is used only on the power supply board; the +17 volt supply is used both on the board and elsewhere in the 492.

Voltage Reference Supply

The +17 volts is fed through R6021 nd R6020 to the voltage divider that feeds Zener diode VR6026. The 6.2 volts from the Zener diode is divided across R6029, R6028, and R6023. +5V REF adjustment R6028, is set for precisely +5 volts at TP6027.

Regulator Circuits

Four of the available voltages from he power supply are regulated: +15 volt, −15 volt, +5 volt, and −5 volt. In function, all four regulators are the same. The circuit differences are minimal so only the +5 volt regulator is discussed here. Significant differences are discussed following this description.

The voltage regulator part of the circuit is U2037A which compares the +5 V REF and +5 V SENSE voltages, amplifies the difference, and applies the change to Q2023, the driver transistor. The change is amplified by this stage and applied to the base of series-pass transistor Q2024 changing its conduction to correct for the original change to the +5 volts.

The current regulator portion of the circuit is U2037B. A change in current through R2017 is applied to the non-inverting input of U2037B, which amplifies the change and applies it to the base of the driver transistor Q2023. The transistor amplifies the change which alters the bias of Q2024, causing it to restore the current flow through R2017 to its former value.

The +15 volt regulator is the same as the +5V regulator, except that the coupling circuits from the preamplifiers are separated from one another. The −15 volt regulator is virtually identical to the +5 volt regulator. The −5 volt regulator differs from the others in that a driver stage is not required, so the preamplifiers drive the series-pass transistor (Q5013) directly.

Over-voltage Protection Circuit

Zener diode VR1015 and SCR Q1010 form the over voltage protection circuit. If the +5 volt supply passes +6 volts, the potential on the gate of Q1010 biases it into conduction. This forces the +5 volt supply to ground; it remains at ground potential until the analyzer is de-energized and turned on again.

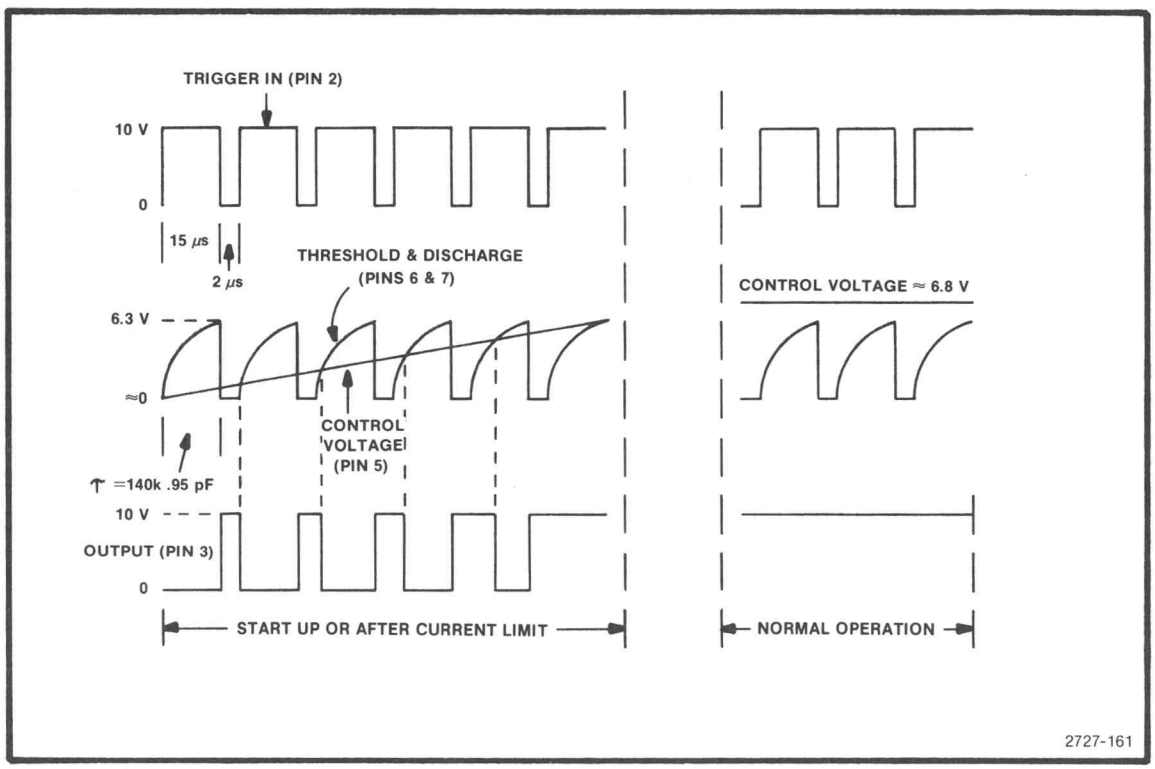

Fig. 5-42. Timing waveforms (stylized) for soft-start circuit.

FAN DRIVE CIRCUIT

The Fan Drive circuit provides a temperature controlled current drive to the fan motor. The circuit produces a three-phase drive current of approximately 240 Hz operating frequency. The actual drive circuit operates as a ring counter.

Transistors Q1038 and Q1044 form a current regulator that is controlled by thermistor RT2045, the value of which varies inversely with the internal temperature of the analyzer. The thermistor and a companion resistor R2042, fix the voltage at the emitter of Q1044 at about −13 volts at turn-on, and more positive as the analyzer warms up.

The ring counter consists of three stages: Q1025, and Q1020, with R1031-C1032 and R1027-C1018 as the frequency-determining components; Q2025 and Q1018, with R1033-C1033 and R2019-C1019 as the frequency determining components; and Q2030 and Q2020, with R2014-C2012 and R2016-C2018 as the frequency determining components. When the analyzer is energized, one of the three ring counter stages begins conducting before the others, owing to circuit imbalances. Assume that the upper stage (Q1025 and Q1020) begins conducting before the others. The collector voltage of Q1025 is near −17 volts which fixes that point as the most negative in a ring consisting of R1032, R1029, R1028, R2036, R2034, and R1036. Since the emitter voltage of the three control transistors (Q1020, Q1018, and Q2020) is the same, the voltage division around the resistive ring is such that Q1018 and Q2020 remain cut off. When the capacitive charge that holds Q1020 in conduction bleeds off, the transistor cuts off and the next stage can begin to conduct. The remaining two are in turn prevented from operating until the RC combination discharges. The fan motor inductance works in conjunction with the RC components to regulate the switching of the stages.

This ring-counter action builds up slowly until the circuit is producing a three-phase drive signal of about 240 Hz. The inductance of the motor coils round off the otherwise sharp corners of the driving signal, so the current waveform looks a great deal like the output of a half-wave rectifier at P2020, pins 1, 2, and 3. Each of the driving signals are approximately 120 degrees apart, so as to drive the motor.

GLOSSARY

The following glossary is presented as an aid to better understand the terms as they are used in this document and with reference to spectrum analyzers.

General Terms

Spectrum Analyzer. An apparatus which is generally used to display the power distribution of an incoming signal as a function of frequency.

NOTE

It is useful in analyzing the characteristics of repetitive electrical waveforms in general, since repetitively sweeping through the frequency range of interest will display all components of the signal.

Center Frequency. That frequency which corresponds to the center of a frequency span, expressed in hertz.

dBc. dB below carrier level.

Effective Frequency Range. That range of frequency over which the instrument performance is specified. The lower and upper limits are expressed in hertz.

Frequency Band. A part of effective frequency range over which the frequency can be adjusted, expressed in hertz.

Full Span (Maximum Span). A mode of operation in which the spectrum analyzer scans an entire frequency band.

Zero Span. A mode of operation in which the frequency span is reduced to zero.

Envelope Display. The display produced on a spectrum analyzer when the resolution bandwidth is greater than the spacing of the individual frequency components.

Line Display. The display produced on a spectrum analyzer when the resolution bandwidth is less than the spacing of the signal amplitudes of the individual frequency components.

Line Spectrum. A spectrum composed of signal amplitudes of the discrete frequency components.

Maximum Safe Input Power

WITHOUT DAMAGE. The maximum power applied at the input which will not cause degradation of the instrument characteristics.

WITH DAMAGE. The minimum power applied at the input which will damage the instrument.

Intermodulation Spurious Response (Intermodulation Distortion). An unwanted spectrum analyzer response resulting from the mixing of the nth order frequencies, due to non-linear elements of the spectrum analyzer, the resultant unwanted response being displayed.

Baseline Clipper (Intensifier). Increasing the brightness of the signal relative to the baseline portion of the display.

Pulse Stretcher. A pulse shaper that produces an output pulse, whose duration is greater than that of the input pulse, and whose amplitude is proportional to that of the peak amplitude of the input pulse.

Signal Identifier. A means to identify the spectrum of the input signal when spurious responses are possible.

Video Filter. A post detection low-pass filter.

Scanning Velocity. Frequency span divided by sweep time and expressed in hertz per second.

Terms Related to Frequency

Display Frequency. The input frequency as indicated by the spectrum analyzer and expressed in hertz.

Frequency Span (Dispersion). The magnitude of the frequency band displayed, expressed in hertz or hertz per division.

Frequency Linearity Error. The error of the relationship between the frequency of the input signal and the frequency displayed (expressed as a ratio).

Frequency Drift. Gradual shift or change in displayed frequency over the specified time due to internal changes in the spectrum analyzer, and expressed in hertz per second, where other conditions remain constant.

Residual FM (Incidental FM). Short term displayed frequency instability or jitter due to instability in the spectrum analyzer local oscillators, given in terms of peak-to-peak frequency deviation and expressed in hertz or percent of the displayed frequency.

Impulse Bandwidth. The displayed spectral level of an applied pulse divided by its spectral voltage density level assumed to be flat within the pass-band.

Static (Amplifier) Resolution Bandwidth. The specified bandwidth of the spectrum analyzer's response to a cw signal, if sweep time is kept substantially long.

NOTE

This bandwidth is the frequency separation of two down points, usually 6 dB, on the response curve, if it is measured either by manual scan (true static method) or by using a very low speed sweep (quasi-static method).

Shape Factor (Skirt Selectivity). The ratio of the frequency separation of the two (60 dB/6 dB) down points on the response curve to the static resolution bandwidth.

Zero Pip (Response). An output indication which corresponds to zero input frequency.

Terms Related to Amplitude

Deflection Coefficient. The ratio of the input signal magnitude to the resultant output indication.

NOTE

The ratio may be expressed in terms of volts (rms) per division, decibels per division, watts per division, or any other specified factor.

Display Reference Level. A designated vertical position representing a specified input level.

NOTE

The level may be expressed in decibels (e.g., 1 mW), volts, or any other units.

Sensitivity. Measure of a spectrum analyzer's ability to display minimum level signals, at a given IF bandwidth, display mode, and any other influencing factors, and expressed in decibels (e.g., 1 mW).

Equivalent Input Noise Sensitivity. The average level of a spectrum analyzer's internally generated noise referenced to the input.

Display Flatness. The unwanted variation of the displayed amplitude over a specified frequency span, expressed in decibels.

Relative Display Flatness. The display flatness measured relative to the display amplitude at a fixed frequency within the frequency span, expressed in decibels.

NOTE

Display flatness is closely related to frequency response. The main difference is that the spectrum display is not recentered.

Frequency Response. The unwanted variation of the displayed amplitude over a specified center frequency range, measured at the center frequency, expressed in decibels.

Display Law. The mathematical law that defines the input-output function of the instrument.

NOTE

The following cases apply:

1. *Linear—A display in which the scale divisions are a linear function of the input signal voltage.*

2. *Square law (power)—A display in which the scale divisions are a linear function of the input signal power.*

3. *Logarithmic—A display in which the scale divisions are a logarithmic function of the input signal voltage.*

Dynamic Range. The maximum ratio of the levels of two signals simultaneously present at the input which can be measured to a specified accuracy.

Display Dynamic Range. The maximum ratio of the levels of two non-harmonically related sinusoidal signals each of which can be simultaneously measured on the screen to a specified accuracy.

Gain Compression. Maximum input level where the scale linearity error is below that specified.

Spurious Response. A response of a spectrum analyzer wherein the displayed frequency does not conform to the input frequency.

Hum Sidebands. Undesired responses created within the spectrum analyzer, appearing on the display that are separated from the desired response by the fundamental or harmonic of the power line frequency.

Noise Sidebands. Undesired response caused by noise internal to the spectrum analyzer appearing on the display around a desired response.

Residual Response. A spurious response in the absence of an input signal. (Noise and zero pip are excluded.)

Input Impedance. The impedance at the desired input terminal.

NOTE

Usually expressed in terms of VSWR, return loss, or other related terms for low impedance devices and resistance-capacitance parameters for high impedance devices.

Terms Related to Digital Storage for Spectrum Analyzers

Digitally Stored Display. A display method whereby the displayed function is held in a digital memory. The display is generated by reading the data out of memory.

Digitally Averaged Display. A display of the average value of digitized data computed by combining serial samples in a defined manner.

Multiple Display Memory. A digitally stored display having multiple memory sections which can be displayed separately or simultaneously.

Clear (Erase). Presets memory to a prescribed state, usually that denoting zero.

Save. A function which inhibits storage update, saving existing data in a section of a multiple memory (e.g., Save A).

View (Display). Enables viewing of contents of the chosen memory section (e.g., "View A" displays contents of memory A; "View B" displays the contents of memory B).

Max Hold (Peak Mode). Digitally stored display mode which, at each frequency address, compares the incoming signal level to the stored level and retains the greater. In this mode, the display indicates the peak level at each frequency after several successive sweeps.

Scan Address. A number representing each horizontal data position increment on a directed beam type display. An address in a memory is associated with each scan address.

Tektronix
COMMITTED TO EXCELLENCE

MANUAL CHANGE INFORMATION

Date: 4-23-82 Change Reference: C21/482

Product: 492/492P Spectrum Analyzer Manual Part No.: see below

DESCRIPTION

070-2726-03 492/492P Operators

070-2727-03 492/492P Service Volume 1
(SN B029999 & Below)

070-3783-01 492/492P Service Volume 1
(SN B030000 & Up)

SECTION 1, page 1-17, GENERAL INFORMATION AND SPECIFICATION, Table 1-5, Option 03 Electrical Characteristics

Change to read:

Characteristics	Performance Requirement	Supplemental Information
Resolution	Additional resolution bandwidth of 100 Hz with 7.5:1 shape factor except instruments prior to B040000 that have the cavity 2nd LO A20, Part No. 119-1022-00 and 119-1022-01. Shape factor for these instruments with 100 Hz resolution is 15:1.	

Tektronix
COMMITTED TO EXCELLENCE

MANUAL CHANGE INFORMATION

Date: 9-21-82 Change Reference: C22/982

Product: 492/492P (SN B029999 & below) Manual Part No.: 070-2727-03

DESCRIPTION

TEXT CHANGES

SECTION 3, CALIBRATION, PERFORMANCE CHECK PROCEDURE, Part 2. Check Frequency Readout Accuracy, page 3-8, step f

CHANGE TO READ:

f. Repeat this process checking frequency readout accuracy in 1 GHz or 2 GHz increments for bands 1 through 3 (0 to 7.1 GHz) applying the limit ±(0.2% of center frequency +20% of span/division) above 2.5 GHz.

Part 2.A, page 3-8, CHANGE TO READ:

2.A. 492P only Tune Accuracy Check ±(7% of frequency or 150 kHz)n, whichever is greater, after a 2-hour warm-up, in bands 1 and 2.

Part 23. Check Triggering Operation & Sensitivity, page 3-31, step f, NOTE & i
CHANGE TO READ:

f. Adjust the sine-wave generator output for a modulation amplitude of two division, then switch TRIGGERING to INT.

NOTE

Because of deflection amplifier response the display amplitude will decrease at the high frequency end.

The triggering signal can also be applied, through a BNC-to-pin-jack cable, to pins 1, 2, and 3 (see Fig. 3-25) of the rear panel ACCESSORIES connector (pin 2 is Video in, pin 1 Ext Video select and pin 3 is ground).

Connect a jumper between pins 1 & 3.

i. Set the sine-wave generator frequency to 1 kHz. Adjust its output level for 2 V peak-to-peak(0.5 V peak) as indicated on the test oscilloscope (see Fig. 3-20).

CHANGE Fig. 3-20, page 3-32, cutline to read:

Fig. 3-20. Test oscilloscope display of a sinewave input signal to EXT TRIG connector (input 1.0 V peak or 2.0 V peak-to-peak.

DESCRIPTION

TEXT CHANGES

Revised 6-4-82

SECTION 3 CALIBRATION

STEP 10: Calibrating the Resolution Bandwidth and Shape Factor; pages 3-56 through 3-59, parts g. through x.

DELETE part g., h., and i.

RE-LETTER parts j. through r. as g. through o.

RE-LETTER part s. as part p. and CHANGE to read as follows:

Adjust the 10 kHz filter with C2037 (Fig 3-44) for the best amplitude and filter shape.

DELETE part t.

RE-LETTER parts u. through x as q. through t.

CHANGE:

STEP 11: Presetting the Variable Resolution Gain and Band Leveling; page 3-59 through 3-60 as follows:

The following is a two part procedure The first part applies to instruments Serial No. B020000 and above, the second to instruments Serial No. B019999 and below.

Part 1
(Instruments B020000 and above)

NOTE

The Log Amplifier must be calibrated before adjusting any VR gain settings. Log amplifier calibration can be verified by applying a 0 dBm, 10 MHz signal to the input (J621) of the Log Amplifier and checking for full screen display with -20 dBm REF LEVEL.

The Post VR Gain R2038 (Fig 3-43) is normally preset by removing the VR#2 module cover and applying a -16 dBM, 10 MHz signal to pin JJ. Adjust for a full screen display with a REF LEVEL of -30 dBm. Replace the cover before proceeding with the other gain adjustments. Band gain adjustments, other than band 1, must be done after tracking has been calibrated and flatness checked. If the range of any band gain adjustment is insufficient, add a diode between the output of U3023 and the base of Q2049, as shown on the schematic diagram for Variable Resolution No. 2.

DESCRIPTION

a. Test equipment is shown in Fig 3-41. Install VR#2 module on an extender board as shown in Fig 3-43. Set the front panel controls as follows:

REF LEVEL	-30 dBm
MIN RF ATTEN	0 dBm
FREQ SPAN/DIV	1 MHZ
RESOLUTION BANDWIDTH	100 kHZ
VERT DISPLAY	2 dB/DIV

b. As described in the preceeding note, the gain of the Post VR Amplifier should be 16 dB for best signal-to-noise ratio through the VR stages. If any maintenance has been performed on this stage, perform the following steps.

1) Remove the cover to the VR#2 module. Disconnect the jumper to the input of the post VR Amplifier (pin JJ).

2) Apply 10 MHz, -16 dBm signal from a 50 ohm signal generator source to pin JJ of the amplifier.

3) Adjust Gain R2038 for a full screen display.

4) Remove the signal from the input to the Post VR Amplifier and replace the jumper between pins JJ of the 2nd Filter Select output and the input to the Post VR Amplifier. Replace the cover for the VR module.

c. Adjust the front panel AMPL CAL to its fully ccw position and set the Band 1 Gain R2031 (Fig 3-43) on VR#2 fully ccw.

d. Disconnect P693 from the input to VR#1 module (Fig 3-44) and apply a 10 MHz, -35 dBm signal from the signal generator through a bnc- to-Sealectro adapter to J693. Adjust the generator frequency to peak the signal.

e. Signal amplitude should be between 3.5 and 6.5 divisions. (If signal amplitude is not within these limits it indicates a gain problem in the VR.)

f. If the signal is over 5 divisions, adjust the Post VR Gain, R2038, (Fig 3-43) for a 5 division signal. If the amplitude is 5 divisions or less, increase the Post VR Gain (R2038) for a 5 division signal amplitude.

g. Adjust the front panel AMPL CAL for a 7 division signal.

h. Decrease the generator output to -45 dBm and change the REF LEVEL to -40 dBm.

i. Adjust the 10 dB Gain, R3035, (Fig 3-44) of VR#1 so the signal amplitude is 7 divisions.

DESCRIPTION

j. Change the generator output to -55 dBm and the REF LEVEL to -50 dBm.

k. Adjust the 20 dB Gain, R2023, (Fig 3-44) for a 7 division signal amplitude.

l. Change the generator output to -75 dBm and the REF LEVEL to -70 dBm.

m. Adjust the 10 dB Gain R2060 (Fig 3-44) for a 7 division signal amplitude.

n. Increase the REF LEVEL to -30 dBm and the generator output to -35 dBm. Check for a 7 division signal amplitude. Repeat this check for -45, -55,-65, and -75 dBm input levels and note that each maintains the 7 division signal to verify that the gain of the VR gain stages are correct. Readjust gain if necessary.

o. Remove the 10 MHz signal to J680 and reconnect P680. The final band gain level adjustments are described after calibrating the Preselector Tracking and checking flatness. The mean level for each band is set to the level of band 1.

Part 2
(Instruments Serial No. B019999 and below)

The Log Amplifier must be calibrated before adjusting any VR gain settings. Log amplifier calibration can be verified by applying a 0 dBm, 10 MHz signal to the input (J621) of the Log Amplifier and checking for full screen display with -20 dBm REF LEVEL.

The Post VR Gain R2038 (Fig 3-43) is normally preset by removing the VR#2 module cover and applying a -16 dBM, 10 MHz signal to pin JJ. Adjust for a full screen display with the REF LEVEL of -30 dBm. Replace the cover before proceeding with the other gain adjustments. Band gain adjustments, other than band 1, must be done after tracking has been calibrated and flatness checked. If the range of any band gain adjustment is insufficient, add a diode between the output of U3023 and the base of Q2049, as shown on the schematic diagram for Variable Resolution No. 2.

a. Test equipment is shown in Fig 3-41. Install VR#2 module on an extender board aas shown in Fig 3-43. Set the front panel controls as follows:

REF LEVEL	-30 dBm
MIN RF ATTEN	0 dBm
FREQ SPAN/DIV	1 MHZ
RESOLUTION BANDWIDTH	100 kHZ
VERT DISPLAY	2 dB/DIV

DESCRIPTION

b. As described in the preceeding note, the gain of the Post VR Amplifier should be 16 dB for best signal-to-noise ratio through the VR stages. If any maintenance has been performed on this stage, perform the following steps.

1) Remove the cover to the VR#2 module. Disconnect the jumper to the input of the post VR Amplifier (pin JJ).

2) Apply 10 MHz, -16 dBm signal from a 50 ohm signal generator source to pin JJ of the amplifier.

3) Adjust Gain R2038 for a full screen display.

4) Remove the signal from the input to the Post VR Amplifier and replace the jumper between pins JJ of the 2nd Filter Select output and the input to the Post VR Amplifier. Replace the cover for the VR module.

c. Set Band 1 Gain R2031 (Fig 3-43) on VR#2 fully ccw for minimum gain.

d. Disconnect P693 from the VR#1 module (Fig 3-44). Apply a 10 MHz, -35 dBm, signal from the signal generator through a bnc-to-Seaalectro adapter to J693 (input to VR input circuit). Note the amplitude of the display.

e. If the amplitude of the signal is above the top graticule line (full screen), reduce the Post VR gain by adjusting R2038 (Fig 3-43). If the signal is below the top of the screen, adjust Band 1 gain with R2031 (Fig 3-43) for a full screen (eight division) display.

f. Change the input level to -40 dBm. Turn the front panel AMPL CAL fully clockwise and note the display amplitude.

g. Decrease the input signal level 6 dB and adjust the AMPL CAL so the display returns to the reference noted in part e. This provides 6 dB of range.

RE-LETTER part f. as h. and ADD the existing part g. as the second sentence of the new part h.

RE-LETTER the remaining parts sequentially beginning with i.

Step 13, IF Gain Calibration, page 3-60.

For instruments B020000 and up, CHANGE AND ADD: Part a and b:

a. Set the RESOLUTION BANDWIDTH to 100 kHz, REF LEVEL to -20 dBm, and apply -21.5 dBm, 110 MHz signal, through step attenuators, to the input (J365) of the 110 MHz filter (Fig 3-46)

DESCRIPTION

b. Set the step attenuators for 0 dB (signal level should be 7 divisions or more). Adjust the generator output for a 7 division signal reference level.

Part h:

h. Verify that Band 1 Gain, R2031, is fully ccw. Set the front panel AMPL CAL fully ccw.

i. Adjust the 110 MHz IF Gain, R1015, (Fig 3-46) for a signal amplitude of 5 divisions. (If this cannot be achieved, it indicates excessive loss through the front end.)

j Adjust AMPL CAL for a full screen signal. AMPL CAL should now have 6 dB down range and at least 6 dB of up range.

STEP 18, part b, item 1., page 3-66

CHANGE to read:

1. Set the FREQUENCY RANGE to Band 1 (0-1.8 GHz).

SECTION 5 THEORY OF OPERATION

p. 5-20, ahead of Input Circuit

Gains, Levels, and Alignment (VR Assemblies 670-0141-01 and 670-0140-01)

The following are the nominal gains of each section. The levels are given in dBm at the output of each stage. The assumption is that the system is operating in the normal mode with a -30 dBm front panel reference input, leading to an input to the VR system of -35 dBm. The output delivered to the Log Amplifier is then 0 dBm.

1) VR Input Board. Normal gain is 16 dB. It may be as high as 18 dB. Normal output level is then -19 dBm

2) First Filter Select. Nominal gain in 100 kHz resolution is -8 dB, hence, normal output level is -27 dBm.

3) 10 dB gain Board. Nominal gain is 22 dB. However, this is variable from the front panel AMP CAL control with a typical total range of 14 dB. Minimum gain is typically 14 dB. With the nominal level of 22 dB, the output will be -5 dBm.

4) 20 dB Gain Step Board. Nominal gain is -16 dB. Hence, the normal output level is -21 dBm.

5) Band Leveling Board. This board has variable gain. The normal condition in Band 1 is to set the appropriate potentiometer for a high range of about 4 dB, producing a nominal gain of 18 dB. The nominal output is then -3 dBm.

DESCRIPTION

6) Second Filter Select. This board has a nominal gain of -13 dB. It is higher than that of the first filter select owinr to the inclusion of resolution leveling adjustments within the second filter select. The nominal output is -16 dBm.

7) Post VR Amplifier. The nominal gain is 16 dB, producing an output of 0 dBm. Adjustment range is available on this board for up to 20 dB of gain.

The total system is aligned as follows:

The Post VR amplifier gain is set for 16 dB. The Band 1 gain is set up a few dB above the stop and the rest of the leveling is done with the AMP CAL. The system should be run at -35 dBm input. Initial setup is in a 100 kHz bandwidth. After setting up the gain steps at this resolution, the other bandwidths are leveled with no gain. The gain steps should then be checked in each resolution position. Additrionally, the system should be set for Band 5 with the band potentiomemter ste for maximum gain. The shape of the filters should then br checked with 40 dB of gain called. Accuracy of gain steps should also be evaluated.

p. 5-21, after third complete paragraph

ADD:

The 10 kHz filter for the First Filter Select (670-5530-01 and up) uses a pair of two-pole monolithic crystal filters that are interconnected by variable shunt capacitor C2037. Input and output impedances are matched with broadband transformers T3026 and T3055. A 3 dB attenuator, consisting of R2027, R2026, and R2028, is included at the filter input.

The 1 kHz resolution filter for the First Filter Select (670-5530-01 and up) consists of a single two-pole monolithic crystal filter, matched to the 50 Ω impedance with broadband transformers T2035 and T2055. A 2 dB attenuator, consisting of R2024, R2023, and R2025, is also part of the filter.

p. 5-21, ahead of 10 dB Gain Steps Circuit

ADD:

10 dB Gain Step Circuit (670-5331-02 and up)

The 10 dB gain circuit provides 10 dB of signal gain when selected by the microcomputer. The circuit consists of three stages of amplification, one stage provides variable gain, the other two fixed gain steps. The nominal input signal level from the 1st Filter Select circuit is -26 dBm for a resolution bandwidth of 100 kHz. (All levels listed in this description relate to the 100 kHz resolution.)

The input signal is applied through an impedance transformer, T3019, to the first amplifier stage consisting of a differential pair (Q3016 and Q2027) and an emitter-follower output amplifier (Q1036). Negative feedback through R1031 and R2051 provides gain stabilization. An output resistor, R2035, increases the output impedance of the composite amplifier to approximately 50 Ω.

Gain for the input stage is fixed for all resolution bandwidths except 30 Hz. In instruments that have the 30 Hz resolution bandwidth capability the gain for 30 Hz is set to a precise level by activating Q2015. Transistor Q2015 is biased on by a low on pin L. This adds R2025 (30 Hz level) across feedback resistor R2051. R2025 can now be adjusted to set the gain of the stage.

DESCRIPTION

The output from the 1st stage is then applied to a common-emitter stage (Q2043). Gain of this stage, when transistor Q4039 is turned on, is 10 dB. When the base of Q4039 is pulled low by data bit 0 from Q4035, on the VR Mother board #1, the transistor saturates and shunts the emitter load resistor R3048 with R3038 and the 10 dB Gain adjustment R3035.

The output of Q2043 drives the input of the third amplifier stage. This stage operates the same as the first stage except for gain variation. Feedback resistor R1060 is shunted by PIN diode CR1053. As the current through the diode increases the resistance decreases and the gain of the stage increases. Gain control of the stage is established by the setting of the front panel AMPL CAL adjustment. Gain range is about 14 dB.

Output impedance of the stage is 50 Ω, set by resistor R1064. Nominal output level is -5 dBm for a full screen display. This level may be as high as +5 dBm when MIN NOISE button is activated 10 dB of gain is also removed from the Log Amplifier to reduce the noise level and must be supplied by the VR section.

p. 5-22, ahead of 20 dB Gain Step Circuits

ADD:

20 dB Gain Step Circuits (670-5536-01 & up)

The 20 dB Gain Steps circuit provides -6 dB, +4 dB, +14 dB, and +24 dB of gain in precise 10 dB steps. The nominal -5 dBm input is supplied through pin P from the 10 dB Gain Steps circuit. This signal is applied to a chain of three common-emitter amplifiers, each using emitter degeneration. Changing the emitter resistance changes amplifier gain under the direction of the microprocessor.

The nominal gain of the complete circuit is -6 dB with Q2018, Q2042, and Q1062 biased off. This provides a nominal -11 dBm output. In this condition, control pins V and Y are high, causing switching transistors Q2018, Q2042, and Q1062 to be cut off.

When pin V is low, Q2018 and Q2042 are saturated, raising the gain of the first two amplifiers 20 dB. Variable resistor R2025 is used to adjust the gain shift of the first stage (Q1025) while the gain shift of the second stage (Q1035) is fixed at +10 dB. This adjustment allows the gain shift to be exactly set to +20 dB.

When pin Y is low, Q1062 is saturated, raising the gain of the third amplifier (Q1043) 10 dB. Variable resistor R1063 allows the gain shift to be exactly set to +10 dB.

Data bits 2, 1, and 0 control the gains of the 10 dB Gain Step circuit. Bit 2 controls pin V, bit 1 controls pin Y, and bit 0 controls pin N. The data is decoded and stored in latches on the VR Mother Board #2. Table 5-X shows the state of bits 2, 1, and 0 and the gain shifts of amplifier stages Q2043, Q1025, Q1035, and Q1043.

The output of the 20 dB Gain Step circuit is attached to coaxial connector J2031. The signal is routed through a double coaxial cable to the Band Leveling circuit.

DESCRIPTION

TABLE 5-X

GAIN STEP COMBINATIONS

Required Gain Addition	Data Bits 2	1	0	10 dB Gain Step Circuit Q2043	Pin N	20 dB Gain Step Circuit Q1025+Q1035	Pin V	Q1043	Pin Y
10 dB	0	0	1	10 dB	0	0 dB	1	0 dB	1
20 dB	1	0	0	0 dB	1	20 dB	0	0 dB	1
30 dB	1	0	1	10 dB	0	20 dB	0	0 dB	1
40 dB	1	1	1	10 dB	0	20 dB	0	10 dB	0

p. 5-22, ahead of Band Leveling Circuit

ADD:

Band Leveling Circuit (670-5533-02)

The two amplifiers in the VR Band Leveling circuit correct the gain variations caused by the front end. These band-to-band variations are caused by mixing different harmonics, in the first converter, and losses through the preselector.

The output of this board is -2 dBm while the nominal input is -11 dBm. This input level occurs on Band 1 (at 100 kHz Resolution in Min Distortion mode) but decreases in the higher bands; the output is kept constant by using the microprocessor to adjust the amplification for each band.

The two amplifier blocks in this circuit are similar to the blocks used in the 10 dB Gain Step circuit. The block is a three-transistor circuit using a differential pair as an emitter-follower. The gain is controlled by altering the feedback network.

From the 20 dB Gain Steps circuit, the signal is applied through a double-shielded coaxial cable and J683. It is sent through input transformer T2013 to the first amplifier block.

The first block (Q2015, Q2014, and Q1025) has a gain range of 13.5 dB by using a PIN diode (CR2021) in the feedback loop.. The bias for this diode is comes from an array of variable resistors on the VR Mother Board #2, with the individual resistor selected by the microprocessor.

The second block is similar except that the gain change occurs in one step of approximately 12.5 dB. This gain step occurs only in the higher bands and is activated by the microprocessor through user-selected diodes on the VR Mother Board #2.

The 492/492P is normally calibrated with the Band 1 gain control resistor set for minimum gain. Gain is then added as required for the higher bands. Data bits 6, 5, 4, and 3 control band selection.

The output from the second amplifier block is applied through connector EE to the VR 2nd Filter Select circuits.

DESCRIPTION

p. 5-23, ahead of 2nd Filter Select Circuits

The circuit description for 670-5534-01 and up is essentially the same as that which exists for the -00 version. However, the following changes are necessary.

second paragraph;third sentence

When 30 Hz resolution is incorporated, the 30 Hz bandwidth will use the 1 kHz filter in the 2nd Filter Select circuits.

second paragraph;fourth sentence

....being low for both 1 kHz and 30 Hz bandwidth sections.

fourth paragraph,second sentence

....filter circuit is approximately 14 dB,....

sixth paragraph,second sentence

....preceded bt the 1 MHz (wide) filter between....

seventh paragraph,second sentence

....C2050 and C5055 provide for filter tuning.

eighth paragraph,second sentence

The impedances at the input and output are matched to 50 Ω by T4044 and T7050.

p. 5-24, first paragraph;first and second sentences

The 1 kHz also uses a two-pole monolithic crystal filter with impedance matching transformers T4030 and T7038.

REMOVE the second sentence.

p. 5-24, Post VR Amplifier Circuit;third paragraph,first sentence

This final VR amplifier stage is biased for relatively high output current.