Tektronix®
COMMITTED TO EXCELLENCE

WARNING

THE FOLLOWING SERVICING INSTRUCTIONS ARE FOR USE BY QUALIFIED PERSONNEL ONLY. TO AVOID PERSONAL INJURY, DO NOT PERFORM ANY SERVICING OTHER THAN THAT CONTAINED IN OPERATING INSTRUCTIONS UNLESS YOU ARE QUALIFIED TO DO SO. REFER TO OPERATORS SAFETY SUMMARY AND SERVICE SAFETY SUMMARY PRIOR TO PERFORMING ANY SERVICE.

PLEASE CHECK FOR CHANGE INFORMATION AT THE REAR OF THIS MANUAL.

067-1137-99

GPIB/ACCESSORY INTERFACE

INSTRUCTION MANUAL

Tektronix, Inc.
P.O. Box 500
Beaverton, Oregon 97077

Serial Number _____

061-2785-00
Product Group 26

First Printing SEP 1983

Copyright © 1983 Tektronix, Inc. All rights reserved. Contents of this publication may not be reproduced in any form without the written permission of Tektronix, Inc.

Products of Tektronix, Inc. and its subsidiaries are covered by U.S. and foreign patents and/or pending patents.

TEKTRONIX, TEK, SCOPE-MOBILE, and are registered trademarks of Tektronix, Inc. TELEQUIPMENT is a registered trademark of Tektronix U.K. Limited.

Printed in U.S.A. Specification and price change privileges are reserved.

TABLE OF CONTENTS

SECTION 1 GENERAL INFORMATION AND SPECIFICATIONS
General Information
Introduction 1-1
Change and History Information 1-1
Description 1-1
Specification
Power Requirements 1-2
Environmental Characteristics 1-2
Physical Characteristics 1-3
Standard Accessories 1-3
Service Aids 1-3

SECTION 2 OPERATING INSTRUCTIONS
About the GPIB/Accessory Interface 2-1
Installation 2-1
Repackaging 2-1
Functions of the Controls and Connectors
Controls 2-2
Indicators 2-2
Connectors 2-2
Turn On Procedure and Preparation for Use 2-3

SECTION 3 CIRCUIT DESCRIPTION
Overview 3-1
Digital Control Section 3-1
Processor Board 3-5
Memory Board 3-5
GPIB Board 3-6
GPIB Interface Board 3-8
Mother Board 3-8

SECTION 4 REPLACEABLE PARTS

SECTION 5 DIAGRAMS
492/492P and 496/496P Digital Control Section Block Diagram
GPIB/Accessory Interface Block Diagram
Processor Board
Memory Board
GPIB Board and GPIB Interface Board
Mother Board

CHANGE INFORMATION

GENERAL INFORMATION AND SPECIFICATION

GENERAL INFORMATION

Introduction

This manual contains information pertinent to the installation and operation of 067-1137-99 GPIB/Accessory Interface. Contents and organization of this manual are described in the Table of Contents preceding this section. These instructions presume the user is knowledgeable in the use of programmable spectrum analyzers. The intent is to provide operating and service information for the 067-1137-99 GPIB/Accessory Interface.

Change and History Information

Change information that involves manual corrections and/or additional data is located at the back of the manual in the CHANGE INFORMATION section.

History information with the updated data is integrated into the text or diagrams when a page or diagram is updated.

Description

The 067-1137-99 GPIB/Accessory Interface is used to add programmability to the 492 and 496 Spectrum Analyzer. This interface, with its 4050-Series magnetic tape, allows semi-automated tests to be performed on the 492 and 496 Spectrum Analyzers.

The GPIB/Accessory Interface is a two-wide TM 500-Series plug-in. Switches are provided to configure the instrument for a 492, 492 Opt. 08, or 496 Spectrum Analyzer; select the GPIB bus address and operating mode; and RESET the microprocessor. The instrument is interfaced to the spectrum analyzer via the ACCESSORY connector and interfaced to the the GPIB controller through the IEEE STD 488 port. Power is provided by either a TM 500-Series mainframe or a TM 5000-Series mainframe.

SPECIFICATIONS

Items listed in the Supplemental Information column may not be verified in this manual; they are either explanatory notes or performance characteristics for which no limits are specified.

POWER REQUIREMENTS

Characteristic	Description
Input Voltage	
TM 500 Mainframes	
Pin 2A, 2B	+11.5V filtered dc, 7.5A fuse.
Pin 12A, 12B	+33.5V filtered dc, 2.5A fuse.
Pin 3A, 3B, 4A, 4B, 9A, 9B	Ground.
TM 5000 Mainframes	
Pin 2A, 2B	+8V regulated dc, current limited.
Pin 12A, 12B	+26V regulated dc, current limited.
Pin 3A, 3B, 4A, 4B, 9A, 9B	Ground.
Input Current	
Pin 2A, 2B	1.07A (typical)
Pin 12A, 12B	29 mA (typical)
Power Consumption	13.5 watts maximum.

NOTE

If power to this instrument is interrupted, it may be necessary to re-initialize the microprocessor; when power is restored, press the RESET button.

ENVIRONMENTAL CHARACTERISTICS

Characteristic	Description
Temperature	
Operating and Humidity	0 to +50 C/95% (+5%, -0%) relative humidity.
Non-operating	-40 to +75 C.

NOTE

After storage at temperatures below the operating range, the microprocessor may not initialize on power-up. If so, allow the instrument to warm up for 30 minutes and re-initialize the microprocessor by pressing the RESET button.

PHYSICAL CHARACTERISTICS

Characteristic	Description
Weight	3.38 pounds.
Dimensions (Including knob)	5.0" high x 5.3" wide x 11.6" deep.

STANDARD ACCESSORIES

Nomenclature	P/N	Qty.
Instruction Manual	061-2785-00	1
Cable, Accessory Interconnect, 6 feet, 25 pin male to female pin to pin, #24 AWG, shielded D subminiature cable Vykrashield	175-8567-00	1
4050-Series Mag Tape (with 492P Performance Verification program)	020-0979-00	1

SERVICE AIDS

Nomenclature	P/N	Qty.
Circuit board extenders	670-5562-00	1
	670-5563-00	2

OPERATING INSTRUCTIONS

About the GPIB/Accessory Interface

The 067-1137-99 GPIB/Accessory Interface is a two-wide instrument that plugs into a TM 500 or TM 5000 mainframe. It allows non-programmable 490-Series Spectrum Analyzers, such as the 492 or 496, to be functionally similar to the 490P-Series of programmable spectrum analyzers.

Full communications between the GPIB controller and the 490-Series analyzer are always available. However, sychronization errors between the GPIB/Accessory Interface and some versions of the 490-Series analyzers will interfere with operation of the waveform transfer commands and the commands that interact with the analyzer's Digital Storage.

The GPIB/Accessory Interface electrically disconnects the processor section inside the analyzer (by grounding the INT CONT line) and substitutes a processor section within the GPIB/Accessory Interface. This processor section, unlike the section within the analyzer which it replaces, has a GPIB interface board, allowing GPIB control of the analyzer. The GPIB/Accessory Interface can emulate a 492P, a 492P Opt. 08, or a 496P by turning the front-panel INSTRUMENT SELECTOR knob.

Installation

Install the GPIB/Accessory Interface by aligning its guide rails with the tracks of the mainframe compartment and then pushing the instrument into the compartment until the front panel is flush with the front panel of the mainframe. To remove the instrument, pull the release latch on the lower left front panel.

Repackaging

When the GPIB/Accessory Interface is to be shipped to a Tektronix Service Center for service or repair, attach a tag showing: owner and address, name of individual at your firm that can be contacted, complete serial number, and a description of the service required. If the original packaging is unfit for use or not available, repackage the equipment as follows:

1. Obtain a carton of corrugated cardboard having inside dimensions that are at least six inches more than the equipment dimensions, to allow for cushioning. The table below lists instrument weights and carton strength requirements.

2. Surround the equipment with polyethylene sheeting to protect the front-panel finish.

3. Cushion the equipment on all sides with packing material or urethane foam between the carton and the sides of the equipment.

4. Seal with shipping tape or industrial stapler.

SHIPPING CARTON TEST STRENGTH

Gross Weight		Carton Test Strength	
Pounds	Kilograms	Pounds	Kilograms
0-10	0-3.73	200	74.6
10-30	3.73-11.19	275	102.5
30-120	11.19-44.76	375	140.0
120-140	44.76-52.22	500	186.5
140-160	52.22-59.68	600	223.8

Functions of the Controls and Connectors

Controls:

RESET: This resets the GPIB/Accessory Interface processor and the analyzer to which it is connected. This function lasts for approximately six seconds after the RESET button is released.

INSTRUMENT SELECTOR: This selects emulation of a 492P, a 492P Opt. 08, and 496P. This rotary switch should be set to match the analyzer type.

Internally, the switch selects between a 492P or 496P ROM set and selects Option 08 by not shorting Switch 1 of the Memory Board option switch to ground.

GPIB ADDRESS SWITCHES: The switches labelled 1, 2, 4, 8, and 16 set the lower five bits of the instrument's GPIB address. The LISTEN and TALK switches set the direction of data flow between the GPIB/Accessory Interface and the GPIB controller. EOI/LF or LF selects the appropriate message terminator.

Indicators:

Power-On LED: Indicates normal power-on operation. This lights when +2.5V or more is present on the +5V power supply bus.

Connectors:

IEEE STD 488 PORT: This interfaces the GPIB/Accessory Interface to the GPIB bus. Connect the GPIB cable last, after all instruments are switched on and the GPIB/Accessory controller is RESET.

ACCESSORY: This interfaces the GPIB/Accessory Interface with the spectrum analyzer J104 Accessory connector (on the rear panel). The two instruments should be connected after the analyzer and the GPIB/Accessory controller are switched on. When the two instruments are connected, press RESET once.

TURN ON PROCEDURE AND PREPARATION FOR USE

The following procedure checks for correct operation of the 067-1137-99 GPIB/Accessory Interface and the associated spectrum analyzer.

a. Insert the GPIB/Accessory Interface into the TM 500 or TM 5000 mainframe. Confirm that the latch is engaged.

b. Turn on the spectrum analyzer and wait three or four minutes for it to stabilize and warm up before proceeding. (Before starting a performance check, the instrument should warm up for the period specified in the Operators manual.) Confirm that the crt readout is functioning normally. Turn on the TM 500 or TM 5000 mainframe and check that the green LED lights up on the front panel GPIB/Accessory Interface unit.

c. Check whether the analyzer is a 492 or 496 and set the front panel INSTRUMENT SELECTOR switch to the appropriate position. If the instrument is a 492, look at the rear panel OPTION plate to see if it is an Option 8 instrument. If it is, set the switch to 492 OPTION 8.

d. Insert the Performance Verification tape in a 4050-Series GPIB controller. Press AUTO LOAD and follow the directions on the 4050-Series screen.

e. Attach one end of the GPIB cable to the front panel IEEE STD 488 connector and the other end to the GPIB controller. The GPIB controller can now CONTROL, TALK, and LISTEN to the spectrum analyzer.

f. Connect the front panel ACCESSORY connector on the GPIB/Accessory interface to the rear panel J104 Accessory connector on the spectrum analyzer using the provided cable. Similar cables should not be substituted.

g. Press the RESET button on the front panel of the GPIB/Accessory Interface unit. Confirm that the display on the analyzer is re-initialized correctly (i.e., that VER X.X appears on the crt).

Refer to the "Introduction to GPIB Operation" section of the 492P or 496P Programmer's manual for information on setting the GPIB Address Switches. The following sections of the 492P or 496P Programmer's manual describe how to program the analyzer with a GPIB controller.

CIRCUIT DESCRIPTION

OVERVIEW

The 067-1137-99 is essentially a slightly modified digital control section of the 496P Spectrum Analyzer, consisting of a (modified) processor board, a (modified) memory board, a GPIB board, and a GPIB Interface board. It also uses a special motherboard, a GPIB cable adapter board, and a front panel switch to select memory configuration. The memory can be configured to emulate a 492P, a 492P Opt. 8, or a 496P.

Diagram 1 shows a block diagram of the 492 digital control section. The microprocessor bus communicates with the instrument bus through a Motorola 6821 PIA. The path through this PIA can be broken by grounding the INTL CONT line from the ACCESSORIES INTERFACE connector; grounding this line also activates the buffers on the Accessories Interface Board, permitting external access to the instrument bus.

When the 067-1137-99 is connected to the ACCESSORIES INTERFACE connector, the digital control section of the Spectrum Analyzer is isolated from the instrument bus and replaced by the digital control section of the 067-1137-99 (shown in Diagram 2). The INSTRUMENT SELECTOR switch configures the internal EPROMs of the memory board so they match the instrument being controlled. External GPIB control is provided by the front-panel IEEE-488 interface.

DIGITAL CONTROL SECTION

The digital control section consists of a Motorola 6802 microprocessor, a 6821 PIA module, a 9914 GPIA interface, and 44K bytes of ROM and 3K bytes of RAM. Switches are provided to modify the instrument configuration for performing self diagnostics. Refer to the appropriate Motorola data sheets for descriptions of the 6802 microprocessor and the 6821 PIA, and to the Texas Instruments data sheets for the descriptions of the 9914 GPIA.

The microprocessor (U3027) communicates with the memory and I/O devices via the microprocessor bus and with the spectrum analyzer circuits via the instrument bus. The microprocessor bus consists of 8 data lines, 16 address lines, the VMA line, the R/W (read/write) line, the RESET line, and the GPIB SRQ line.

The microprocessor communicates with the instrument bus through a 6821 PIA (U3022). The instrument bus consists of 8 data lines, 8 address lines, the POLL line, the DATA VALID line, and the SER REQ line.

Interrupts are handled by the 6802 in the following manner. Interrupts can be generated by the instrument bus or the GPIA interface chip. The 6802 will first determine which of the two sources initiated the interrupt. If the instrument bus generated the interrupt, the 6802 initiates a poll routine to determine the particular piece of hardware on the instrument bus that generated the interrupt.

The instrument bus poll sequence is as follows:

When a SER REQ is received from the instrument bus, the microprocessor commands the PIA to put a FF (read the instrument data bus) on the instrument address lines. This sets up the poll circuits to reply. Then the PIA raises the POLL line and asserts DATA VALID. At this point, the circuit that generated the interrupt asserts its respective bit on the instrument data bus. The microprocessor then commands the PIA to read the data bus and return the poll bit to the microprocessor.

The PIA lowers the POLL line, puts address 7F (write to the instrument data bus) on the address bus, writes the poll bits to the data bus, and raises the DATA VALID line. This sets up the poll circuits to receive the poll bit in reply. The microprocessor then commands the PIA to raise the poll line. The circuit that initiated the interrupt resets and removes the interrupt signal, allowing the interrupt to be serviced by the microprocessor. The poll and data valid signals are then lowered to finish the poll sequence.

List of poll bits:

BIT 7----------NOT USED
BIT 6----------NOT USED
BIT 5----------NOT USED
BIT 4----------END OF SWEEP
BIT 3----------CENTER FREQUENCY KNOB
BIT 2----------PHASE LOCK
BIT 1----------NOT USED
BIT 0----------FRONT PANEL

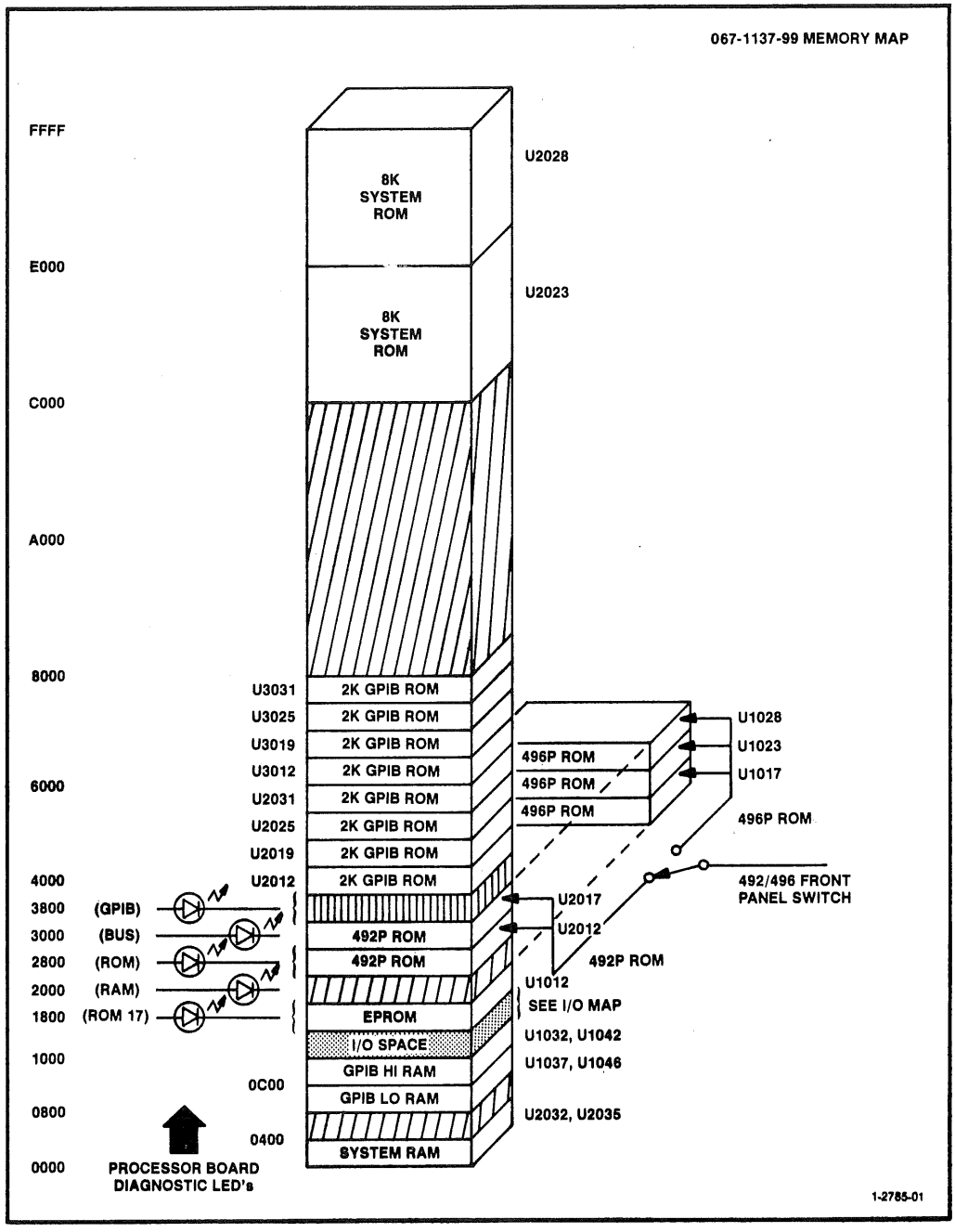

Fig.3-1. The System Memory Map depicts the entire address range of the 6802 processor, showing the switching between the 492P and 496P ROM's. Unused address ranges are shown by striped areas.

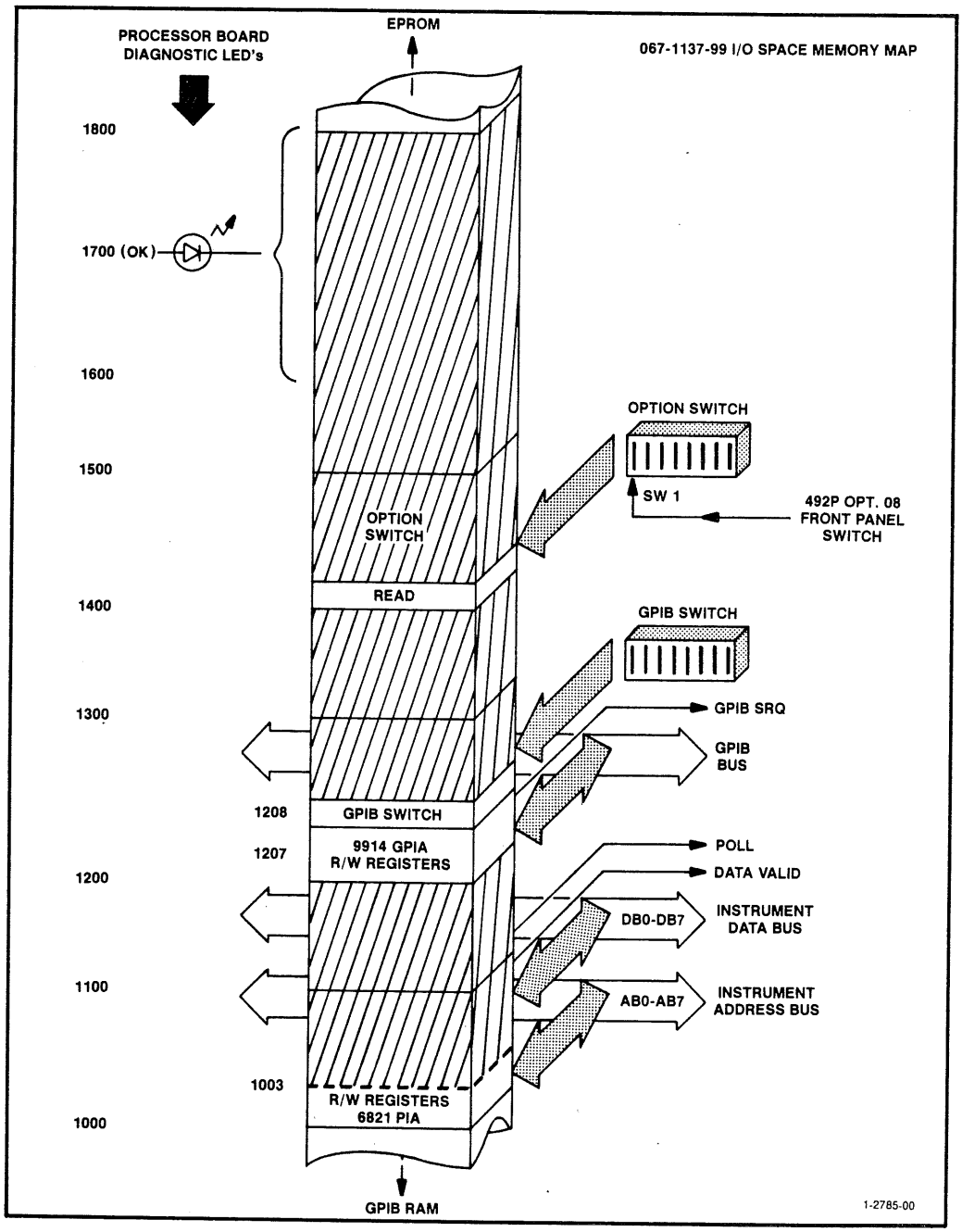

Fig.3-2. The I/O Space Map depicts the address range between 1000 and 17FF. Data is transferred between the microprocessor and various I/O devices (PIA, GPIA, switches, and LEDs) within this range. Unused address ranges are shown by striped areas.

Processor Board (Diagram 3)

The Processor board in conjunction with the Memory board contains all the circuitry involved with the processing functions of the instrument. The GPIB circuit board provides additional ROM, RAM, and the I/O circuitry required to interface with external GPIB controllers.

The 6802 processor (U3027) has its data lines buffered by U1013, a tri-state bus transceiver chip. The processor address lines are buffered by U2035 and U3036. U2049 buffers the R/$\overline{W}$ line, the VMA line, and the two clock lines. The $\overline{\text{SER REQ}}$ line activates the IRQ pin of the 6802 processor.

Additional buffers in U2049 are used to buffer the POLL line and the DATA VALID line. U3022 is the buffered 6821 PIA chip used by the processor to interface with the instrument bus. U2014 buffers the PIA address lines. U3016 buffers the PIA data lines and is also bi-directional. The direction of U3016 is controlled by the most significant bit of the instrument address bus.

(As a result, all instrument bus addresses above 7F are read addresses and all addresses at 7F and below are write addresses.)

Y3037 and Q4035 form a Pierce oscillator. The output from Q4035 is translated to a TTL level by Q3040, and buffered by U2049 before driving the 6802's EXTAL clock input. The CRT Clock signal is used by the CRT readout board and the GPIA interface chip on the GPIB board. The Phase-2 clock is used by other devices on the microprocessor bus. U2049 buffers both clock signals.

U1048 decodes (0000-07FF) for SYS RAM, (0800-0FFF) for GPIB RAM, (1000-17FF) for I/O space, (1800-1FFF) for the ROM 17 LED, (2000-27FF) for the RAM LED, (2800-2FFF) for the ROM LED, (3000-37FF) for the BUS LED, and (3800-3FFF) for the GPIB LED. The (1000-17FF) line is sent to U1037, which further decodes (1000-11FF) to the GPIA chip, (1200-13FF) to the GPIA line, (1400-15FF) to the OPSW line, and (1600-17FF) to the OK LED. The LEDs are current-limited with the R1036 resistor array.

Memory Board (Diagram 4)

The Memory board holds the ROM operating system for the analyzer and the RAM used by the operating system for stack space and temporary variables. It also holds a bank of switches that the microprocessor can read to configure itself for options and diagnostics.

ROM Address Decoding

The full microprocessor address bus extends to this board for ROM address decoding. U1036 and U1038 decode banks of addresses and assert one-of-eight ROM chip-enable lines when a bank that corresponds to one of the ROMs is addressed. The decoders are enabled when VMA and R/$\overline{W}$ are both high (during a read cycle with a valid address). U1036 also requires A15 to be low to be enabled; if enabled, it decodes addresses in the range 1800 to 3800 from the binary code formed by A11 through A13.

binary code formed by A11 through A13.

When a 496 is selected on the front panel, pin 34 is driven high and pin 33 is driven low; this enables U1017, U1023, and U1028 and disables U2012 and U2017, accessing the memory between 2000 and 37FF. When a 492 is selected (or 492 Opt. 08) pin 33 is driven high and pin 34 is driven low; this enables U2012 and U2017 and disables U1017, U1023, and U1028, accessing the memory between 2800 and 37FF. The 492 does not use the space between 2000 and 27FF.

Since U1038 alone responds to the upper-half of address space, it need not decode addresses further than A13 through A15. The decoded enable lines (C000 and E000) drive the chip-enable (CE) inputs and the upper address bits (A12 and A11) are decoded by the chip. Since the 8k x 8 ROMs recognize a new address only on the negative transition of CE, the decoder responds to Phase 2 CLK, clocking the ENABLE lines.

RAM

Data words in RAM are divided between the two 1k X 4 chips; U2032 holds the upper four bits and U2035 holds the lower four bits. Both are selected by $\overline{\text{SYS RAM}}$ and the Phase 2 clock, while R/$\overline{\text{W}}$ sets the data direction.

Option Switch Register

The microprocessor accesses U1033, a buffer enabled by $\overline{\text{OPSW}}$, to read S1033 at power-up. Switch 1 indicates Option 08 (open) or non-option 08 (closed). Switch 1 is left open, leaving the buffer controlled by the front panel 496/492/492 Opt. 08 selector through pin 40. Switches 2 through 6 control internal hardware configuration. Switches 7 and 8 call self-test routines. In normal operation, switch 1 is left open, while switches 2 through 8 are left closed. For more information on the diagnostic use of these switches, refer to the Maintenance section of the 492/492P Service Manual Vol. 1.

GPIB Board (Diagram 5)

The GPIB capability is provided by two boards: the GPIB board and the GPIB Interface board. The GPIB board contains additional ROM and RAM, used by interface functions, and the GPIA interface between the microprocessor and the GPIB bus. The GPIB Interface board provides buffers for the GPIB bus and the front-panel GPIB address switch.

GPIB RAM

RAM on the GPIB board supplies I/O buffer space for GPIB transfers. The RAM ICs, four bits wide, are paired to provide byte-wide addresses. For instance, U1032 and U1042 are both selected when $\overline{\text{HIRAM}}$ (0C00) is asserted. The 10 lower bits on the address bus select an address location within each IC. The $\overline{\text{GPIB RAM}}$ address range, 0800 to 0FFF, is decoded by half of U1028. $\overline{\text{HIRAM}}$ (0C00) and $\overline{\text{LORAM}}$ (0800) select lines are enabled by the $\overline{\text{GPIB RAM}}$ line and the state of A10 on the address bus.

GPIB Interface/Address Switch Register

Either the GPIB interface (U2047) or the address switch register (U3039) is selected by the other half of U1028. The select line for either is enabled by GPIA; for addresses between 1200 and 1207, the GPIB interface is selected, for address 1208, the switch register is selected. The address switch register (U3039) is a buffer for the front-panel GPIB ADDRESS, LF OR EOI, TALK ONLY, and LISTEN ONLY switches (S1011).

Address Switch Register

U3039 is a tristate buffer which is used to read the GPIB switches (S1011) which are located on the GPIB Interface Board. The R-C network on each switch line serves as decoupling for noise and unwanted pulses. R3049 is a pull-up resistor network.

GPIB Interface

The GPIB interface is based on the 9914 general purpose interface adapter The GPIA (U2047) performs the majority of the functions specified in IEEE Standard 488-1978 and allows firmware implementation of the rest of those functions. These functions are not explained here, but are discussed in some detail in Appendix A of the 492P or 496P Programmer's manual.

Interrupts are generated by pulling down on the $\overline{\text{SER REQ}}$ line. The CRT CLK line provides the clock reference.

The GPIA's internal logic handles:

Source and acceptor handshakes
Talker and listener functions
Recognizing GPIB address
Service request (SRQ)
Remote/local function
Local lockout
Serial and parallel poll response
Respond to device clear
Respond to device trigger
NRFD holdoff when receiving data

GPIB ROM

ROM on the GPIB board contains the portion of the instrument operating system that handles GPIB data transfers. This portion of the firmware decodes and responds to messages received on the bus, transferring control to the appropriate subroutines in Memory board firmware to execute the actions called for by the message.

The ROM address space is divided into two banks, which are filled with four 2k x 8 packages each. Straps on the board are set to control decoder U1021 and to route signals as needed. U1021 decodes A11 through A13 to assert one of its eight chip-enable outputs during a read cycle within the ROM address range (4000-7FFF, i.e., A14 high and A15 low). Straps on U2012 and

U3012 inputs are set to apply the correct enable and address signals for 2k ROMs.

The 2k ROMs are addressed as follows:

U2012 (4000-47FF)
U2019 (4800-4FFF)
U2025 (5000-57FF)
U2031 (5800-5FFF)
U3012 (6000-67FF)
U3019 (6800-6FFF)
U3025 (7000-77FF)
U3031 (7800-7FFF)

GPIB Interface Board (Diagram 5)

Two transceivers on the GPIB Interface board buffer signals on the GPIB. S1011 sets the GPIB address and the GPIB operating modes.

The data bus buffers, in U1012, are controlled by two signals: TE (talk enable) and PE (pull-up enable). TE from the GPIA sets the direction of data flow: high means GPIA to GPIB and low GPIB to GPIA. Tri-state operation is enabled when PE is high; open collector operation is selected when PE is low.

Open collector operation is required during a PARALLEL POLL, which occurs only when ATN is asserted. PE is accordingly tied to the ATN line.

The bus management buffers in U1011 are automatically configured by TE and ATN to operate in the required direction (driving DAV and EOI when TE is high and NDAC and NFRD when TE is low).

Motherboard (Diagram 6)

This board interconnects the Processor, Memory, and GPIB boards. It carries the Microprocessor Bus (D0-D7, A0-A15, R/$\overline{W}$, VMA, phase 2 CLK, and $\overline{RESET}$), the Instrument Bus (DB0-DB7, AB0-AB7, DATA VALID, SER REQ, and POLL), assorted address decoder lines (SYS RAM, GPIB RAM, OPSW, and GPIA), power supplies (GND, +5V, and +15V), and special-purpose lines dedicated to GPIB/Accessory Interface features (492, 492 Opt. 08, 496, and processor RESET).

The eight-position rotary switch (S100) selects Memory board ROMs to correctly drive three different spectrum analyzers (492, 492 Opt. 08, and 496). The 492 line and the 496 line are pulled up by R1017 and R1016, respectively.

The RESET button (S200) allows the microprocessor to be reset without powering down the TM 500 module. R1018 protects the switch from excessive short-circuit current.

CR1020 and R1020 keeps the 9914 GPIA on the GPIB board high when the SRQ line is raised by the analyzer. This occurs when data is sent is sent over the GPIB bus.

The front-panel LED (DS100) indicates the presence of regulated +5V from the three-pin regulator (U100). C1011 and C1013 insure that U100 will always be stable. C1012 improves the transient response of the +5V supply. F1011 protects the TM 500 mainframe from failures on the circuit board. R1011 and VR1011 provide +15V for future boards.

The INTERNAL CONTROL line is grounded, making the associated spectrum analyzer give control of it's Instrument Bus to the GPIB/Accessory Interface unit. The DATA BUS ENABLE line is also grounded, enabling the spectrum analyzer PIA chip.

REPLACEABLE ELECTRICAL PARTS

PARTS ORDERING INFORMATION

Replacement parts are available from or through your local Tektronix, Inc. Field Office or representative.

Changes to Tektronix instruments are sometimes made to accommodate improved components as they become available, and to give you the benefit of the latest circuit improvements developed in our engineering department. It is therefore important, when ordering parts, to include the following information in your order: Part number, instrument type or number, serial number, and modification number if applicable.

If a part you have ordered has been replaced with a new or improved part, your local Tektronix, Inc. Field Office or representative will contact you concerning any change in part number.

Change information, if any, is located at the rear of this manual.

LIST OF ASSEMBLIES

A list of assemblies can be found at the beginning of the Electrical Parts List. The assemblies are listed in numerical order. When the complete component number of a part is known, this list will identify the assembly in which the part is located.

CROSS INDEX-MFR. CODE NUMBER TO MANUFACTURER

The Mfr. Code Number to Manufacturer index for the Electrical Parts List is located immediately after this page. The Cross Index provides codes, names and addresses of manufacturers of components listed in the Electrical Parts List.

ABBREVIATIONS

Abbreviations conform to American National Standard Y1.1.

COMPONENT NUMBER (column one of the Electrical Parts List)

A numbering method has been used to identify assemblies, subassemblies and parts. Examples of this numbering method and typical expansions are illustrated by the following:

Example a.

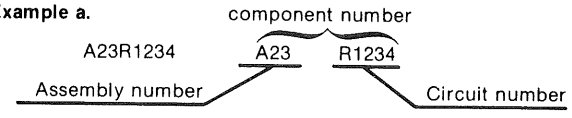

Read: Resistor 1234 of Assembly 23

Example b.

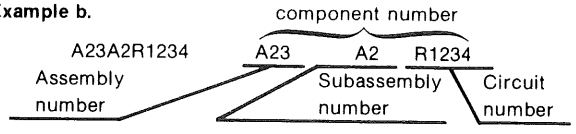

Read: Resistor 1234 of Subassembly 2 of Assembly 23

Only the circuit number will appear on the diagrams and circuit board illustrations. Each diagram and circuit board illustration is clearly marked with the assembly number. Assembly numbers are also marked on the mechanical exploded views located in the Mechanical Parts List. The component number is obtained by adding the assembly number prefix to the circuit number.

The Electrical Parts List is divided and arranged by assemblies in numerical sequence (e.g., assembly A1 with its subassemblies and parts, precedes assembly A2 with its subassemblies and parts).

Chassis-mounted parts have no assembly number prefix and are located at the end of the Electrical Parts List.

TEKTRONIX PART NO. (column two of the Electrical Parts List)

Indicates part number to be used when ordering replacement part from Tektronix.

SERIAL/MODEL NO. (columns three and four of the Electrical Parts List)

Column three (3) indicates the serial number at which the part was first used. Column four (4) indicates the serial number at which the part was removed. No serial number entered indicates part is good for all serial numbers.

NAME & DESCRIPTION (column five of the Electrical Parts List)

In the Parts List, an Item Name is separated from the description by a colon (:). Because of space limitations, an Item Name may sometimes appear as incomplete. For further Item Name identification, the U.S. Federal Cataloging Handbook H6-1 can be utilized where possible.

MFR. CODE (column six of the Electrical Parts List)

Indicates the code number of the actual manufacturer of the part. (Code to name and address cross reference can be found immediately after this page.)

MFR. PART NUMBER (column seven of the Electrical Parts List)

Indicates actual manufacturers part number.

CROSS INDEX—MFR. CODE NUMBER TO MANUFACTURER

Mfr. Code	Manufacturer	Address	City, State, Zip
00779	AMP, INC.	P.O. BOX 3608	HARRISBURG, PA 17105
01121	ALLEN-BRADLEY COMPANY	1201 2ND STREET SOUTH	MILWAUKEE, WI 53204
01295	TEXAS INSTRUMENTS, INC. SEMICONDUCTOR GROUP	P.O. BOX 5012	DALLAS, TX 75222
04222	AVX CERAMICS, DIVISION OF AVX CORP.	P O BOX 867	MYRTLE BEACH, SC 29577
05574	VIKING INDUSTRIES, INC.	21001 NORDHOFF STREET	CHATSWORTH, CA 91311
07263	FAIRCHILD SEMICONDUCTOR, A DIV. OF FAIRCHILD CAMERA AND INSTRUMENT CORP.	464 ELLIS STREET	MOUNTAIN VIEW, CA 94042
09353	C AND K COMPONENTS, INC.	103 MORSE STREET	WATERTOWN, MA 02172
13511	AMPHENOL CARDRE DIV., BUNKER RAMO CORP.		LOS GATOS, CA 95030
22526	BERG ELECTRONICS, INC.	YOUK EXPRESSWAY	NEW CUMBERLAND, PA 17070
27014	NATIONAL SEMICONDUCTOR CORP.	2900 SEMICONDUCTOR DR.	SANTA CLARA, CA 95051
29587	BUNKER-RAMO CORP., AMPHENOL INDUSTRIAL DIV.	1830 S. 54TH AVE.	CHICAGO, IL 60650
33096	COLORADO CRYSTAL CORPORATION	2303 W 8TH STREET	LOVELAND, CO 80537
34335	ADVANCED MICRO DEVICES	901 THOMPSON PL.	SUNNYVALE, CA 94086
50434	HEWLETT-PACKARD COMPANY	640 PAGE MILL ROAD	PALO ALTO, CA 94304
55680	NICHICON/AMERICA/CORP.	6435 N PROESEL AVENUE	CHICAGO, IL 60645
56289	SPRAGUE ELECTRIC CO.	87 MARSHALL ST.	NORTH ADAMS, MA 01247
57668	R-OHM CORP.	16931 MILLIKEN AVE.	IRVINE, CA 92713
71279	CAMBRIDGE THERMIONIC CORP.	445 CONCORD AVE.	CAMBRIDGE, MA 02138
71400	BUSSMAN MFG., DIVISION OF MCGRAW-EDISON CO.	2536 W. UNIVERSITY ST.	ST. LOUIS, MO 63107
72619	DIALIGHT, DIV. AMPEREX ELECTRONIC	203 HARRISON PLACE	BROOKLYN, NY 11237
72982	ERIE TECHNOLOGICAL PRODUCTS, INC.	644 W. 12TH ST.	ERIE, PA 16512
80009	TEKTRONIX, INC.	P O BOX 500	BEAVERTON, OR 97077
90201	MALLORY CAPACITOR CO., DIV. OF P. R. MALLORY AND CO., INC.	3029 E. WASHINGTON STREET P. O. BOX 372	INDIANAPOLIS, IN 46206
91506	AUGAT, INC.	33 PERRY AVE.	ATTLEBORO, MA 02703
91637	DALE ELECTRONICS, INC.	P. O. BOX 609	COLUMBUS, NE 68601
91836	KINGS ELECTRONICS CO., INC.	40 MARBLEDALE ROAD	TUCKAHOE, NY 10707
96733	SAN FERNANDO ELECTRIC MFG CO	1501 FIRST ST	SAN FERNANDO, CA 91341

Component No.	Tektronix Part No.	Serial/Model No. Eff	Dscont	Name & Description	Mfr Code	Mfr Part Number
A10	670-8070-00			CKT BOARD ASSY:GPIB TO ACCESSORY CONTROL	80009	670-8070-00
A11	670-8071-00			CKT BOARD ASSY:GPIB CABLE ADAPTER	80009	670-8071-00
A30A57	670-5556-00			CKT BOARD ASSY:GPIB INTERFACE	80009	670-5556-00
A54	670-6958-02			CKT BOARD ASSY:MEMORY	80009	670-6958-02
A56	670-5543-01			CKT BOARD ASSY:GPIB	80009	670-5543-01
A58	670-7229-00			CKT BOARD ASSY:PROCESSOR	80009	670-7229-00
.						
.						
.						
.						
A10	670-8070-00			CKT BOARD ASSY:GPIB TO ACCESSORY CONTROL	80009	670-8070-00
.						
A10C1011	283-0134-00			CAP.,FXD,CER DI:0.47UF,+80-20%,50V	72982	8131N087Z5U0474Z
A10C1012	290-0942-00			CAP.,FXD.ELCTLT:100UF,+100-10%,25V	56289	672D107H025CG2C
A10C1014	283-0108-00			CAP.,FXD,CER DI:220PF,10%,200V	56289	1C10C0G221K200B
A10C1013	290-0942-00			CAP.,FXD.ELCTLT:100UF,+100-10%,25V	56289	672D107H025CG2C
A10CR101	152-0322-00			SEMICOND DEVICE:SILICON,15V,HOT CARRIER	50434	5082-2672
A10CR1020	152-0322-00			SEMICOND DEVICE:SILICON,15V,HOT CARRIER	50434	5082-2672
A10F1011	159-0021-00			FUSE,CARTRIDGE:3AG,2A,250V,FAST-BLOW	71400	AGC 2
A10P1015	131-0608-00			TERMINAL,PIN:0.365 L X 0.025 PH BRZ GOLD	22526	47357
A10P1016	131-0608-00			TERMINAL,PIN:0.365 L X 0.025 PH BRZ GOLD	22526	47357
A10P1017	131-0608-00			TERMINAL,PIN:0.365 L X 0.025 PH BRZ GOLD	22526	47357
A10P1018	131-0608-00			TERMINAL,PIN:0.365 L X 0.025 PH BRZ GOLD	22526	47357
A10P1019	131-2199-00			CONN,RCPT,ELEC:CKT CARD,25 CONT,MALE,RIGHT	00779	205857-1
A10R1011	308-0553-00			RES.,FXD,WW:680 OHM,1%,3W	91637	RS2B-D6R00J
A10R1015	315-0151-00			RES.,FXD,CMPSN:150 OHM,5%,0.25W	01121	CB1515
A10R1016	315-0152-00			RES.,FXD,CMPSN:1.5K OHM,5%,0.25W	01121	CB1525
A10R1017	315-0152-00			RES.,FXD,CMPSN:1.5K OHM,5%,0.25W	01121	CB1525
A10R1018	315-0620-00			RES.,FXD,CMPSN:62 OHM,5%,0.25W	01121	CB6205
A10R1020	315-0202-00			RES.,FXD,CMPSN:2K OHM,5%,0.25W	01121	CB2025
A10R1021	315-0820-00			RES.,FXD,CMPSN:82 OHM,5%,0.25W	01121	CB8205
A10R1022	315-0431-00			RES.,FXD,CMPSN:430 OHM,5%,0.25W	01121	CB4315
A10TP1011	214-0579-00			TERM,TEST POINT:BRS CD PL	80009	214-0579-00
A10TP1012	214-0579-00			TERM,TEST POINT:BRS CD PL	80009	214-0579-00
A10VR1011	152-0405-00			SEMICOND DEVICE:ZENER,1W,15V,5%	80009	152-0405-00
.						
.						
.						
.						
A11	670-8071-00			CKT BOARD ASSY:GPIB CABLE ADAPTER	80009	670-8071-00
A11P1011	131-2543-00			CONN,RCPT,ELEC:CKT BD,25/50 CONT,FEMALE	05574	000201-4543
.						
.						
A30A57	670-5556-00			CKT BOARD ASSY:GPIB INTERFACE	80009	670-5556-00
.						
A30A57C1011	290-0524-00			CAP.,FXD,ELCTLT:4.7UF,20%,10V	90201	TDC475M010EL
A30A57C1012	283-0111-00			CAP.,FXD,CER DI:0.1UF,20%,50V	56289	273C11
A30A57C1013	283-0111-00			CAP.,FXD,CER DI:0.1UF,20%,50V	56289	273C11
A30A57L1011	108-0836-00			COIL,RF:14 UH TOROIDAL INDUCTOR	80009	108-0836-00
A30A57P1011	131-0608-00			TERMINAL,PIN:0.365 L X 0.025 PH BRZ GOLD	22526	47357
A30A57P1012	131-2203-02			CONN,RCPT,ELEC:CKT BD,24 CONT,FEMALE	29587	57-20240-11(398)
A30A57P1013	131-2581-00			CONN,RCPT,ELEC:CKT BD,4 X 7 CONT,FEMALE	91506	528-AG29D
A30A57R1011	317-0103-00			RES.,FXD,CMPSN:10K OHM,5%,0.125W	01121	BB1035
A30A57S1011	260-1721-00			SWITCH,ROCKER:8,SPST,125MA,30VDC	00779	435166-5
A30A57U1011	156-1415-00			MICROCIRCUIT,DI:OCTAL GPIB XCVR MTG BUS	01295	SN75161A
A30A57U1012	156-1414-00			MICROCIRCUIT,DI:OCTAL GPIB XCVR DATA BUS	01295	SN75160

Component No.	Tektronix Part No.	Serial/Model No. Eff	Dscont	Name & Description	Mfr Code	Mfr Part Number
A54	670-6958-02			CKT BOARD ASSY:MEMORY	80009	670-6958-02
A54C1011	283-0111-00			CAP.,FXD,CER DI:0.1UF,20%,50V	56289	273C11
A54C1031	283-0111-00			CAP.,FXD,CER DI:0.1UF,20%,50V	56289	273C11
A54C1038	283-0111-00			CAP.,FXD,CER DI:0.1UF,20%,50V	56289	273C11
A54C1039	283-0111-00			CAP.,FXD,CER DI:0.1UF,20%,50V	56289	273C11
A54C2011	283-0111-00			CAP.,FXD,CER DI:0.1UF,20%,50V	56289	273C11
A54C2029	283-0111-00			CAP.,FXD,CER DI:0.1UF,20%,50V	56289	273C11
A54C2038	283-0111-00			CAP.,FXD,CER DI:0.1UF,20%,50V	56289	273C11
A54R1037	307-0446-00			RES,NTWK,FXD FI:10K OHM,20%,(9) RES	91637	MSP10A01-103M
A54S1033	260-1721-00			SWITCH,ROCKER:8,SPST,125MA,30VDC	00779	435166-5
A54U1012	160-0886-05			MICROCIRCUIT,DI:2048 X 8 EPROM,PRGM	80009	160-0886-05
A54U1017	160-0890-02			MICROCIRCUIT,DI:2048 X 8 EPROM,PRGM	80009	160-0890-02
A54U1023	160-1079-01			MICROCIRCUIT,DI:2048 X 8 EPROM,PRGM	80009	160-1079-01
A54U1028	160-0891-01			MICROCIRCUIT,DI:2048 X 8 EPROM,PRGM	80009	160-0891-01
A54U1033	156-0956-02			MICROCIRCUIT,DI:OCTAL BFR W/3 STATE OUT	01295	SN74LS244NP3
A54U1036	156-0469-02			MICROCIRCUIT,DI:3/8 LINE DCDR	01295	SN74LS138NP3
A54U1038	156-0469-02			MICROCIRCUIT,DI:3/8 LINE DCDR	01295	SN74LS138NP3
A54U2012	160-0888-02			MICROCIRCUIT,DI:2048 X 8 EPROM,PRGM	80009	160-0888-02
A54U2017	160-0887-02			MICROCIRCUIT,DI:2048 X 8 EPROM,PRGM	80009	160-0887-02
A54U2023	160-0838-00			MICROCIRCUIT,DI:8192 X 8 ROM,PRGM	80009	160-0838-00
A54U2028	160-0839-00			MICROCIRCUIT,DI:8192 X 8 ROM,PRGM	80009	160-0839-00
A54U2032	156-1127-01			MICROCIRCUIT,DI:1024 X 4 STATIC RAM	80009	156-1127-01
A54U2033	156-0382-02			MICROCIRCUIT,DI:QUAD 2-INP NAND GATE	01295	SN74LS00
A54U2035	156-1127-01			MICROCIRCUIT,DI:1024 X 4 STATIC RAM	80009	156-1127-01

Component No.	Tektronix Part No.	Serial/Model No. Eff	Dscont	Name & Description	Mfr Code	Mfr Part Number
A56	670-5543-01			CKT BOARD ASSY:GPIB	80009	670-5543-01
A56C1011	283-0111-00			CAP.,FXD,CER DI:0.1UF,20%,50V	56289	273C11
A56C1021	283-0111-00			CAP.,FXD,CER DI:0.1UF,20%,50V	56289	273C11
A56C1028	283-0111-00			CAP.,FXD,CER DI:0.1UF,20%,50V	56289	273C11
A56C2038	283-0111-00			CAP.,FXD,CER DI:0.1UF,20%,50V	56289	273C11
A56C2039	283-0111-00			CAP.,FXD,CER DI:0.1UF,20%,50V	56289	273C11
A56C2041	283-0111-00			CAP.,FXD,CER DI:0.1UF,20%,50V	56289	273C11
A56C2042	283-0111-00			CAP.,FXD,CER DI:0.1UF,20%,50V	56289	273C11
A56C2045	283-0111-00			CAP.,FXD,CER DI:0.1UF,20%,50V	56289	273C11
A56C2047	283-0111-00			CAP.,FXD,CER DI:0.1UF,20%,50V	56289	273C11
A56C2051	283-0111-00			CAP.,FXD,CER DI:0.1UF,20%,50V	56289	273C11
A56C3012	283-0111-00			CAP.,FXD,CER DI:0.1UF,20%,50V	56289	273C11
A56C3019	283-0111-00			CAP.,FXD,CER DI:0.1UF,20%,50V	56289	273C11
A56C3025	283-0111-00			CAP.,FXD,CER DI:0.1UF,20%,50V	56289	273C11
A56C3030	283-0111-00			CAP.,FXD,CER DI:0.1UF,20%,50V	56289	273C11
A56C3031	283-0111-00			CAP.,FXD,CER DI:0.1UF,20%,50V	56289	273C11
A56C3040	283-0111-00			CAP.,FXD,CER DI:0.1UF,20%,50V	56289	273C11
A56C3042	283-0111-00			CAP.,FXD,CER DI:0.1UF,20%,50V	56289	273C11
A56C3044	283-0111-00			CAP.,FXD,CER DI:0.1UF,20%,50V	56289	273C11
A56C3046	283-0111-00			CAP.,FXD,CER DI:0.1UF,20%,50V	56289	273C11
A56C3048	283-0111-00			CAP.,FXD,CER DI:0.1UF,20%,50V	56289	273C11
A56C3049	290-0535-00			CAP.,FXD,ELCTLT:33UF,20%,10V	56289	196D336X0010KA1
A56L3053	108-0598-00			COIL,RF:200UH	80009	108-0598-00
A56R2041	315-0431-00			RES.,FXD,CMPSN:430 OHM,5%,0.25W	01121	CB4315
A56R2042	315-0431-00			RES.,FXD,CMPSN:430 OHM,5%,0.25W	01121	CB4315
A56R2043	315-0431-00			RES.,FXD,CMPSN:430 OHM,5%,0.25W	01121	CB4315
A56R2044	315-0431-00			RES.,FXD,CMPSN:430 OHM,5%,0.25W	01121	CB4315
A56R3041	315-0431-00			RES.,FXD,CMPSN:430 OHM,5%,0.25W	01121	CB4315
A56R3042	315-0431-00			RES.,FXD,CMPSN:430 OHM,5%,0.25W	01121	CB4315
A56R3043	315-0431-00			RES.,FXD,CMPSN:430 OHM,5%,0.25W	01121	CB4315
A56R3044	315-0431-00			RES.,FXD,CMPSN:430 OHM,5%,0.25W	01121	CB4315
A56R3049	307-0446-00			RES,NTWK,FXD FI:10K OHM,20%,(9) RES	91637	MSP10A01-103M
A56U1011	156-0382-02			MICROCIRCUIT,DI:QUAD 2-INP NAND GATE	01295	SN74LS00
A56U1021	156-0469-02			MICROCIRCUIT,DI:3/8 LINE DCDR	01295	SN74LS138NP3
A56U1028	156-0541-02			MICROCIRCUIT,DI:DUAL 2 TO 4 LINE DCDR	01295	SN74LS139NP3
A56U1032	156-1127-00			MICROCIRCUIT,DI:1024 X 4 STATIC RAM	34335	AM91L14BDC
A56U1037	156-1127-00			MICROCIRCUIT,DI:1024 X 4 STATIC RAM	34335	AM91L14BDC
A56U1042	156-1127-00			MICROCIRCUIT,DI:1024 X 4 STATIC RAM	34335	AM91L14BDC
A56U1046	156-1127-00			MICROCIRCUIT,DI:1024 X 4 STATIC RAM	34335	AM91L14BDC
A56U2012	160-0952-01			MICROCIRCUIT,DI:2048 X 8 EPROM,PRGM	80009	160-0952-01
A56U2019	160-0948-01			MICROCIRCUIT,DI:2048 X 8 EPROM,PRGM	80009	160-0948-01
A56U2025	160-0951-01			MICROCIRCUIT,DI:2048 X 8 EPROM,PRGM	80009	160-0951-00
A56U2031	160-0949-01			MICROCIRCUIT,DI:2048 X 8 EPROM,PRGM	80009	160-0949-01
A56U2047	156-1444-01			MICROCIRCUIT,DI:NMOS,GPIB ADAPTER	01295	TMS9914NL
A56U3012	160-0950-02			MICROCIRCUIT,DI:2048 X 8 EPROM,PRGM	80009	160-0950-02
A56U3019	160-0969-01			MICROCIRCUIT,DI:2048 X 8 EPROM,PRGM	80009	160-0969-01
A56U3025	160-0947-02			MICROCIRCUIT,DI:2048 X 8 EPROM,PRGM	80009	160-0947-02
A56U3031	160-0953-02			MICROCIRCUIT,DI:2048 X 8 EPROM,PRGM	80009	160-0953-02
A56U3039	156-0914-02			MICROCIRCUIT,DI:OCT ST BFR W/3 STATE OUT	01295	SN74LS240

Component No.	Tektronix Part No.	Serial/Model No. Eff	Dscont	Name & Description	Mfr Code	Mfr Part Number
A58	670-7229-00			CKT BOARD ASSY:PROCESSOR	80009	670-7229-00
A58C1013	283-0111-00			CAP.,FXD,CER DI:0.1UF,20%,50V	56289	273C11
A58C1022	290-0972-00			CAP.,FXD,ELCTLT:33UF,20%,50VDC	55680	TLB1H330MCA
A58C1026	283-0334-00			CAP.,FXD,CER DI:130PF,+1-2%,500V	04222	SR207A131GAA
A58C1033	283-0111-00			CAP.,FXD,CER DI:0.1UF,20%,50V	56289	273C11
A58C2042	283-0111-00			CAP.,FXD,CER DI:0.1UF,20%,50V	56289	273C11
A58C2046	283-0111-00			CAP.,FXD,CER DI:0.1UF,20%,50V	56289	273C11
A58C3015	283-0111-00			CAP.,FXD,CER DI:0.1UF,20%,50V	56289	273C11
A58C3017	283-0111-00			CAP.,FXD,CER DI:0.1UF,20%,50V	56289	273C11
A58C3032	283-0111-00			CAP.,FXD,CER DI:0.1UF,20%,50V	56289	273C11
A58C3034	283-0111-00			CAP.,FXD,CER DI:0.1UF,20%,50V	56289	273C11
A58C4034	283-0213-00			CAP.,FXD,CER DI:300PF,5%,100V	72982	8121N130C0G0301J
A58C4036	283-0213-00			CAP.,FXD,CER DI:300PF,5%,100V	72982	8121N130C0G0301J
A58C4038	283-0156-00			CAP.,FXD,CER DI:1000PF,+100-0%,200V	96733	R2670
A58C4042	290-0748-00			CAP.,FXD,ELCTLT:10UF,+50-10%,20V	56289	500D149
A58CR1025	152-0322-00			SEMICOND DEVICE:SILICON,15V,HOT CARRIER	50434	5082-2672
A58CR1026	152-0322-00			SEMICOND DEVICE:SILICON,15V,HOT CARRIER	50434	5082-2672
A58CR1027	152-0141-02			SEMICOND DEVICE:SILICON,30V,150MA	01295	1N4152R
A58DS1032	150-1068-00			LT EMITTING DIO:RED	50434	HLMP-6320
A58DS1034	150-1068-00			LT EMITTING DIO:RED	50434	HLMP-6320
A58DS1036	150-1068-00			LT EMITTING DIO:RED	50434	HLMP-6320
A58DS1038	150-1068-00			LT EMITTING DIO:RED	50434	HLMP-6320
A58DS1042	150-1068-00			LT EMITTING DIO:RED	50434	HLMP-6320
A58DS1044	150-1068-00			LT EMITTING DIO:RED	50434	HLMP-6320
A58L4046	108-0836-00			COIL,RF:14 UH TOROIDAL INDUCTOR	80009	108-0836-00
A58P1020	131-0608-00			TERMINAL,PIN:0.365 L X 0.025 PH BRZ GOLD	22526	47357
A58P1033	131-0608-00			TERMINAL,PIN:0.365 L X 0.025 PH BRZ GOLD	22526	47357
A58Q3040	151-0190-00			TRANSISTOR:SILICON,NPN	07263	S032677
A58Q4035	151-0190-00			TRANSISTOR:SILICON,NPN	07263	S032677
A58R1020	307-0446-00			RES,NTWK,FXD FI:10K OHM,20%,(9) RES	91637	MSP10A01-103M
A58R1021	315-0102-00			RES.,FXD,CMPSN:1K OHM,5%,0.25W	01121	CB1025
A58R1022	315-0102-00			RES.,FXD,CMPSN:1K OHM,5%,0.25W	01121	CB1025
A58R1027	307-0696-00			RES NTWK,FXD,FI:7,10K OHM,2%,0.15W	01121	208A103
A58R1036	307-0594-00			RES NTWK,FXD FI:7,220 OHM,2%,1.0W	91637	CSC08A01101221G
A58R2027	315-0243-00			RES.,FXD,CMPSN:24K OHM,5%,0.25W	01121	CB2435
A58R2043	315-0102-00			RES.,FXD,CMPSN:1K OHM,5%,0.25W	01121	CB1025
A58R3015	307-0446-00			RES,NTWK,FXD FI:10K OHM,20%,(9) RES	91637	MSP10A01-103M
A58R3032	315-0202-00			RES.,FXD,CMPSN:2K OHM,5%,0.25W	01121	CB2025
A58R3046	307-0103-00			RES.,FXD,CMPSN:2.7 OHM,5%,0.25W	01121	CB27G5
A58R4030	315-0103-00			RES.,FXD,CMPSN:10K OHM,5%,0.25W	01121	CB1035
A58R4031	315-0273-00			RES.,FXD,CMPSN:27K OHM,5%,0.25W	01121	CB2735
A58R4032	315-0243-00			RES.,FXD,CMPSN:24K OHM,5%,0.25W	01121	CB2435
A58R4033	315-0101-00			RES.,FXD,CMPSN:100 OHM,5%,0. 25W	01121	CB1015
A58R4034	315-0202-00			RES.,FXD,CMPSN:2K OHM,5%,0.25W	01121	CB2025
A58R4037	315-0471-00			RES.,FXD,CMPSN:470 OHM,5%,0.25W	01121	CB4715
A58R4046	315-0473-00			RES.,FXD,CMPSN:47K OHM,5%,0.25W	01121	CB4735
A58R4048	315-0102-00			RES.,FXD,CMPSN:1K OHM,5%,0.25W	01121	CB1025
A58U1013	156-1111-02			MICROCIRCUIT,DI:OCTAL BUS TRANSCEIVERS	01295	SN74LS245JP3
A58U1031	156-0724-02			MICROCIRCUIT,DI:HEX INV W/OC OUT,BURN-IN	01295	SN74LS05
A58U1037	156-0541-02			MICROCIRCUIT,DI:DUAL 2 TO 4 LINE DCDR	01295	SN74LS139NP3
A58U1048	156-0469-02			MICROCIRCUIT,DI:3/8 LINE DCDR	01295	SN74LS138NP3
A58U2014	156-0956-02			MICROCIRCUIT,DI:OCTAL BFR W/3 STATE OUT	01295	SN74LS244NP3
A58U2035	156-0956-02			MICROCIRCUIT,DI:OCTAL BFR W/3 STATE OUT	01295	SN74LS244NP3

Component No.	Tektronix Part No.	Serial/Model No. Eff	Dscont	Name & Description	Mfr Code	Mfr Part Number
A58U2049	156-0956-02			MICROCIRCUIT,DI:OCTAL BFR W/3 STATE OUT	01295	SN74LS244NP3
A58U3016	156-1111-02			MICROCIRCUIT,DI:OCTAL BUS TRANSCEIVERS	01295	SN74LS245JP3
A58U3022	156-0427-03			MICROCIRCUIT,DI:PERIPHERAL INTERFACE	80009	156-0427-03
A58U3027	156-1342-00			MICROCIRCUIT,DI:8 BIT W/CLOCK & RAM	07263	F6802DC
A58U3036	156-0956-02			MICROCIRCUIT,DI:OCTAL BFR W/3 STATE OUT	01295	SN74LS244NP3
A58W1024	131-0566-00			BUS CONDUCTOR:DUMMY RES,2.375,22 AWG	57668	JWW-0200E0
A58W2032	131-0566-00			BUS CONDUCTOR:DUMMY RES,2.375,22 AWG	57668	JWW-0200E0
A58Y3037	158-0088-00			XTAL UNIT,QTZ:3.4133MHZ,0.01%,PARALLEL	33096	PB-1309

Component No.	Tektronix Part No.	Serial/Model No. Eff	Dscont	Name & Description	Mfr Code	Mfr Part Number
				CHASSIS PARTS		
DS100	150-1054-01			LT EMITTING DIO:GREEN,560NM,35MA MAX	72619	558-0201-802
J1010	131-0274-00			CONNECTOR,RCPT,:BNC	91836	KC79-67
J1012	131-0955-00			CONN,RCPT,ELEC:BNC,FEMALE	13511	31-279
J1013	131-0274-00			CONNECTOR,RCPT,:BNC	91836	KC79-67
J1020	136-0387-01			JACK,TIP:BLACK	71279	450-4252-01-0310
S100	260-1335-00			SWITCH,TOGGLE:SPDT,0.4A,20VDC	09353	7101 SHCB8E
S200	260-1285-00			SWITCH,PUSH:SPDT,1A,115AC,MOM	09353	P8121
S300	260-2203-00			SWITCH,ROTARY:8 POLE,10 POS,NS	80009	260-2203-00
U100	156-0684-00			MICROCIRCUIT,LI:3AMP,5V,POSITIVE REGULATOR	27014	LM323K

REPLACEABLE MECHANICAL PARTS

PARTS ORDERING INFORMATION

Replacement parts are available from or through your local Tektronix, Inc. Field Office or representative.

Changes to Tektronix instruments are sometimes made to accommodate improved components as they become available, and to give you the benefit of the latest circuit improvements developed in our engineering department. It is therefore important, when ordering parts, to include the following information in your order: Part number, instrument type or number, serial number, and modification number if applicable.

If a part you have ordered has been replaced with a new or improved part, your local Tektronix, Inc. Field Office or representative will contact you concerning any change in part number.

Change information, if any, is located at the rear of this manual.

SPECIAL NOTES AND SYMBOLS

X000	Part first added at this serial number
00X	Part removed after this serial number

FIGURE AND INDEX NUMBERS

Items in this section are referenced by figure and index numbers to the illustrations.

INDENTATION SYSTEM

This mechanical parts list is indented to indicate item relationships. Following is an example of the indentation system used in the description column.

1 2 3 4 5 Name & Description

Assembly and/or Component
Attaching parts for Assembly and/or Component
\- - - * - - -
Detail Part of Assembly and/or Component
Attaching parts for Detail Part
\- - - * - - -
Parts of Detail Part
Attaching parts for Parts of Detail Part
\- - - * - - -

Attaching Parts always appear in the same indentation as the item it mounts, while the detail parts are indented to the right. Indented items are part of, and included with, the next higher indentation. The separation symbol - - - * - - - indicates the end of attaching parts.

Attaching parts must be purchased separately, unless otherwise specified.

ITEM NAME

In the Parts List, an Item Name is separated from the description by a colon (:). Because of space limitations, an Item Name may sometimes appear as incomplete. For further Item Name identification, the U.S. Federal Cataloging Handbook H6-1 can be utilized where possible.

ABBREVIATIONS

"	INCH
#	NUMBER SIZE
ACTR	ACTUATOR
ADPTR	ADAPTER
ALIGN	ALIGNMENT
AL	ALUMINUM
ASSEM	ASSEMBLED
ASSY	ASSEMBLY
ATTEN	ATTENUATOR
AWG	AMERICAN WIRE GAGE
BD	BOARD
BRKT	BRACKET
BRS	BRASS
BRZ	BRONZE
BSHG	BUSHING
CAB	CABINET
CAP	CAPACITOR
CER	CERAMIC
CHAS	CHASSIS
CKT	CIRCUIT
COMP	COMPOSITION
CONN	CONNECTOR
COV	COVER
CPLG	COUPLING
CRT	CATHODE RAY TUBE
DEG	DEGREE
DWR	DRAWER
ELCTRN	ELECTRON
ELEC	ELECTRICAL
ELCTLT	ELECTROLYTIC
ELEM	ELEMENT
EPL	ELECTRICAL PARTS LIST
EQPT	EQUIPMENT
EXT	EXTERNAL
FIL	FILLISTER HEAD
FLEX	FLEXIBLE
FLH	FLAT HEAD
FLTR	FILTER
FR	FRAME or FRONT
FSTNR	FASTENER
FT	FOOT
FXD	FIXED
GSKT	GASKET
HDL	HANDLE
HEX	HEXAGON
HEX HD	HEXAGONAL HEAD
HEX SOC	HEXAGONAL SOCKET
HLCPS	HELICAL COMPRESSION
HLEXT	HELICAL EXTENSION
HV	HIGH VOLTAGE
IC	INTEGRATED CIRCUIT
ID	INSIDE DIAMETER
IDENT	IDENTIFICATION
IMPLR	IMPELLER
IN	INCH
INCAND	INCANDESCENT
INSUL	INSULATOR
INTL	INTERNAL
LPHLDR	LAMPHOLDER
MACH	MACHINE
MECH	MECHANICAL
MTG	MOUNTING
NIP	NIPPLE
NON WIRE	NOT WIRE WOUND
OBD	ORDER BY DESCRIPTION
OD	OUTSIDE DIAMETER
OVH	OVAL HEAD
PH BRZ	PHOSPHOR BRONZE
PL	PLAIN or PLATE
PLSTC	PLASTIC
PN	PART NUMBER
PNH	PAN HEAD
PWR	POWER
RCPT	RECEPTACLE
RES	RESISTOR
RGD	RIGID
RLF	RELIEF
RTNR	RETAINER
SCH	SOCKET HEAD
SCOPE	OSCILLOSCOPE
SCR	SCREW
SE	SINGLE END
SECT	SECTION
SEMICOND	SEMICONDUCTOR
SHLD	SHIELD
SHLDR	SHOULDERED
SKT	SOCKET
SL	SLIDE
SLFLKG	SELF-LOCKING
SLVG	SLEEVING
SPR	SPRING
SQ	SQUARE
SST	STAINLESS STEEL
STL	STEEL
SW	SWITCH
T	TUBE
TERM	TERMINAL
THD	THREAD
THK	THICK
TNSN	TENSION
TPG	TAPPING
TRH	TRUSS HEAD
V	VOLTAGE
VAR	VARIABLE
W/	WITH
WSHR	WASHER
XFMR	TRANSFORMER
XSTR	TRANSISTOR

CROSS INDEX—MFR. CODE NUMBER TO MANUFACTURER

Mfr. Code	Manufacturer	Address	City, State, Zip
0000M	SONY/TEKTRONIX CORPORATION	P O BOX 14, HANEDA AIRPORT	TOKYO 149, JAPAN
000CY	NORTHWEST FASTENER SALES, INC.	7923 SW CIRRUS DRIVE	BEAVERTON, OR 97005
00779	AMP, INC.	P.O. BOX 3608	HARRISBURG, PA 17105
12327	FREEWAY CORPORATION	9301 ALLEN DRIVE	CLEVELAND, OH 44125
22526	BERG ELECTRONICS, INC.	YOUK EXPRESSWAY	NEW CUMBERLAND, PA 17070
24931	SPECIALITY CONNECTOR CO., INC.	2620 ENDRESS PLACE	GREENWOOD, IN 46142
71279	CAMBRIDGE THERMIONIC CORP.	445 CONCORD AVE.	CAMBRIDGE, MA 02138
71468	ITT CANNON ELECTRIC	666 E. DYER RD.	SANTA ANA, CA 92702
73743	FISCHER SPECIAL MFG. CO.	446 MORGAN ST.	CINCINNATI, OH 45206
75915	LITTELFUSE, INC.	800 E. NORTHWEST HWY	DES PLAINES, IL 60016
78189	ILLINOIS TOOL WORKS, INC. SHAKEPROOF DIVISION	ST. CHARLES ROAD	ELGIN, IL 60120
79807	WROUGHT WASHER MFG. CO.	2100 S. O BAY ST.	MILWAUKEE, WI 53207
80009	TEKTRONIX, INC.	P O BOX 500	BEAVERTON, OR 97077
83385	CENTRAL SCREW CO.	2530 CRESCENT DR.	BROADVIEW, IL 60153
89663	REESE, J. RAMSEY, INC.	71 MURRAY STREET	NEW YORK, NY 10007
91506	AUGAT, INC.	33 PERRY AVE.	ATTLEBORO, MA 02703
93907	TEXTRON INC. CAMCAR DIV	600 18TH AVE	ROCKFORD, IL 61101

Fig. & Index No.	Tektronix Part No.	Serial/Model No. Eff	Dscont	Qty	1 2 3 4 5	Name & Description	Mfr Code	Mfr Part Number
1-1	200-2530-00			2		COVER,CAL FXTR:UPPER & LOWER,AL	80009	200-2530-00
						**********(ATTACHING PARTS)**********		
-2	211-0244-00			4		SCR,ASSEM WSHR:4-40 X 0.312 INCH,PNH STL	78189	OBD
						**********(END ATTACHING PARTS)**********		
-3	337-1399-00			2		SHLD,ELECTRICAL:SIDE	80009	337-1399-00
-4	366-1690-00			1		KNOB:SIL GY,0.53 X 0.23 X 1.059	80009	366-1690-00
-5	105-0719-00			1		LATCH,RETAINING:PLUG-IN	80009	105-0719-00
						**********(ATTACHING PARTS)**********		
-6	213-0113-00			1		SCR,TPG,THD FOR:2-32 X 0.312 INCH,PNH STL	93907	OBD
						**********(END ATTACHING PARTS)**********		
-7	105-0718-01			1		BAR,LATCH RLSE:	80009	105-0718-01
-8	366-0500-00			1		KNOB:GRAY,4 SIDED	80009	366-0500-00
	213-0153-00			1		.SETSCREW:5-40 X 0.125,STL BK OXD,HEX	000CY	OBD
-9	175-1905-00			1		CA ASSY,[illegible],ELEC:2,18 AWG,52.0 L	80009	175-1905-00
-10	----- -----			1		SWITCH,ROTARY:(SEE S300 REPL)	80009	260-2203-00
						**********(ATTACHING PARTS)**********		
-11	210-0413-00			1		NUT,PLAIN,HEX.:0.375-32 X 0.50 BRS	73743	3145-402
-12	210-0840-00			1		WASHER,FLAT:0.39 ID X 0.562 INCH OD,STL	89663	644R
						**********(END ATTACHING PARTS)**********		
-13	----- -----			1		SWITCH,TOGGLE:SPDT,0.4A,20VDC(SEE S100 REP		
						**********(ATTACHING PARTS)**********		
-14	210-0562-00			1		NUT,PLAIN,HEX.:0.25-40 X 0.312 INCH,BBS	73743	2X20224-402
-15	210-0940-00			1		WASHER,FLAT:0.25 ID X 0.375 INCH OD,STL	79807	OBD
-16	211-0105-00			1		SCREW,MACHINE:4-40 X 0.188,100 DEG,FLH ST	83385	OBD
						**********(END ATTACHING PARTS)**********		
-17	136-0387-01			1		JACK,TIP:BLACK	71279	450-4252-01-0310
-18	----- -----			1		LT EMITTING DIO:GREEN(SEE DS100 REPL)		
-19	----- -----			1		SWITCH,PUSH:RESET(SEE S200 REPL)		
						**********(ATTACHING PARTS)**********		
-20	210-0562-00			1		NUT,PLAIN,HEX.:0.25-40 X 0.312 INCH,BBS	73743	2X20224-402
-21	210-0940-00			1		WASHER,FLAT:0.25 ID X 0.375 INCH OD,STL	79807	OBD
						**********(END ATTACHING PARTS)**********		
-22	----- -----			1		CONN,RCPT,ELEC:BNC,FEMALE(SEE J1012 REPL)		
						**********(ATTACHING PARTS)**********		
-23	210-0413-00			1		NUT,PLAIN,HEX.:0.375-32 X 0.50 BRS	73743	3145-402
-24	210-0012-00			1		WASHER,LOCK:INTL,0.384 ID,INTL,0.022 TH	78189	1220-02-00-0541C
						**********(END ATTACHING PARTS)**********		
-25	----- -----			1		CONNECTOR,RCPT:BNC(SEE J1010 REPL)		
						**********(ATTACHING PARTS)**********		
-26	220-0497-00			1		NUT,PLAIN,HEX.:0.5-28 X 0.562 INCH HEX,BRS	73743	OBD
-27	210-1039-00			1		WASHER,LOCK:INT,0.521 ID X 0.625 INCH O	24931	OBD
						**********(END ATTACHING PARTS)**********		
-28	----- -----			1		CONNECTOR,RCPT:BNC (SEE J1013 REPL)		
						**********(ATTACHING PARTS)**********		
-29	220-0497-00			1		NUT,PLAIN,HEX.:0.5-28 X 0.562 INCH HEX,BRS	73743	OBD
-30	210-1039-00			1		WASHER,LOCK:INT,0.521 ID X 0.625 INCH O	24931	OBD
						**********(END ATTACHING PARTS)**********		
-31	131-0890-00			2		LOCK,CONNECTOR:4-40 X 0.312 L	71468	D 20418-2
-32	333-3060-00			1		PANEL,FRONT:	80009	333-3060-00
-33	333-2678-00			1		PANEL,REAR:	80009	333-2678-00
						**********(ATTACHING PARTS)**********		
-34	211-0192-00			2		SCREW,SHOULDER:4-40 X 0.34,0.236 OD HD,STL	0000M	211-0192-00
-35	386-3657-01			2		SUPPORT,PLUG IN:	93907	OBD
-36	211-0504-00			2		SCREW,MACHINE:6-32 X 0.25 INCH,PNH STL	83385	OBD
						**********(END ATTACHING PARTS)**********		
-37	426-1761-01			1		FRAME SECT,CAB.:UPPER	80009	426-1761-01
						**********(ATTACHING PARTS)**********		
-38	211-0101-00			3		SCREW,MACHINE:4-40 X 0.25,100 DEG,FLH STL	83385	OBD
-39	211-0244-00			2		SCR,ASSEM WSHR:4-40 X 0.312 INCH,PNH STL	78189	OBD
-40	213-0229-00			2		SCR,TPG,THD FOR:6-20 X0.375"100 DEG,FLH ST	93907	OBD
						**********(END ATTACHING PARTS)**********		

Fig. & Index No.	Tektronix Part No.	Serial/Model No. Eff	Dscont	Qty	1 2 3 4 5	Name & Description	Mfr Code	Mfr Part Number
1-41	426-1762-00			1		FRAME SECT,CAB.:LOWER	80009	426-1762-00
						**********(ATTACHING PARTS)**********		
-42	211-0244-00			2		SCR,ASSEM WSHR:4-40 X 0.312 INCH,PNH STL	78189	OBD
-43	213-0229-00			4		SCR,TPG,THD FOR:6-20 X0.375"100 DEG,FLH ST	93907	OBD
						**********(END ATTACHING PARTS)*********		
-44	----- -----			1		CKT BOARD ASSY:GPIB INTERFACE		
	----- -----			-		(SEE A30A57 REPL)		
						**********(ATTACHING PARTS)**********		
-45	211-0106-00			2		SCREW,MACHINE:4-40 X 0.625"100 DEG,FLH,ST	83385	OBD
-46	210-0406-00			2		NUT,PLAIN,HEX.:4-40 X 0.188 INCH,BRS	73743	12161-50
-47	210-0054-00			2		WASHER,LOCK:SPLIT,0.118 ID X 0.212"OD S	83385	OBD
-48	210-1002-00			2		WASHER,FLAT:0.125 ID X 0.25 INCH OD,BRS	12327	OBD
						**********(END ATTACHING PARTS)*********		
	----- -----			-		CKT BOARD ASSY INCLUDES:		
-49	----- -----			1		.CONNECTOR:(SEE A30A57P1012 REPL)		
						.**********(ATTACHING PARTS)**********		
-50	214-2871-00			2		.HARDWARE KIT:STANDOFF,W/NUT & LOCK WASHE	00779	552633-1
-51	210-0804-00			2		.WASHER,FLAT:0.17 ID X 0.375 INCH OD,STL	12327	OBD
						.**********(END ATTACHING PARTS)*********		
-52	----- -----			1		.SWITCH:(SEE A30A57S1011 REPL)		
	----- -----			2		.TERMINAL PIN:(SEE A30A57P1011 REPL)		
-53	386-5069-00			1		SUBPANEL,FRONT:	80009	386-5069-00
-54	175-3405-00			1		CA ASSY,SP,ELEC:28,26 AWG,18.0 INCH LONG	80009	175-3405-00
-55	----- -----			1		CKT BOARD ASSY:GPIB CABLE ADAPTOR		
	----- -----			-		(SEE A11 REPL)		
						**********(ATTACHING PARTS)**********		
-56	211-0014-00			2		SCREW,MACHINE:4-40 X 0.50 INCH,PNH STL	83385	OBD
						**********(END ATTACHING PARTS)*********		
	----- -----			-		CKT BOARD ASSY INCLUDES:		
-57	----- -----			1		.CONNECTOR:(SEE A11P1012 REPL)		
-58	407-3106-00			1		BRACKET,ANGLE:CKT BOARD	80009	407-3106-00
						**********(ATTACHING PARTS)**********		
-59	211-0504-00			2		SCREW,MACHINE:6-32 X 0.25 INCH,PNH STL	83385	OBD
						**********(END ATTACHING PARTS)*********		
-60	407-3108-00			1		BRACKET,CKT BD:ALUMINUM	80009	407-3108-00
-61	----- -----			1		MICROCIRCULT,LI:(SEE U100 REPL)		
						**********(ATTACHING PARTS)**********		
-62	211-0504-00			2		SCREW,MACHINE:6-32 X 0.25 INCH,PNH STL	83385	OBD
-63	210-0203-00			1		TERMINAL,LUG:SE #6	78189	2103-06-00-2520N
						**********(END ATTACHING PARTS)*********		
-64	407-3107-00			1		BRACKET,ANGLE:VOLTAGE REGULATOR	80009	407-3107-00
-65	---- -----			1		CKT BOARD ASSY:(SEE A10 REPL)		
						**********(ATTACHING PARTS)**********		
-66	211-0244-00			4		SCR,ASSEM WSHR:4-40 X 0.312 INCH,PNH STL	78189	OBD
-67	220-0455-00			4		NUT,BLOCK:0.281"SQ,THREE 4-40 THRU TH	80009	220-0455-00
						**********(END ATTACHING PARTS)*********		
	----- -----			-		CKT BOARD ASSY INCLUDES:		
	344-0326-00			2		.CLIP,ELECTRICAL:FUSE,BRASS	75915	102071
-68	----- -----			1		.CONNECTOR:(SEE A10P1019 REPL)		
-69	----- -----			1		CKT BOARD ASSY:PROCESSOR(SEE A58 REPL)		
	136-0208-00			1		.SOCKET,PLUG-IN:CRYSTAL AUGAT	91506	8004-1G5
	131-0993-00			2		.BUS,CONDUCTOR:2 WIRE BLACK	00779	850100-01
	131-2167-00			2		.CONN,RCPT,ELEC:CKT BD,FEMALE,12/24	22526	65002-009
	131-2196-00			1		.CONN,RCPT,ELEC:CKT BD,6/12,FEMALE	22526	650002-076
-70	----- -----			1		CKT BOARD ASSY:(SEE A54 REPL)		
-71	----- -----			1		CKT BOARD ASSY:GPIB(SEE A56 REPL)		
-72	175-8568-00			1		CA ASSY,SP,ELEC:2,26 AWG,8.0 L	80009	175-8568-00
						STANDARD ACCESSORIES		
-73	175-8567-00			1		CABLE ASSY,RF:2,22 AWG,50 OHM COAX,48.0 L	80009	175-8567-00
-74	020-0979-00			1		TAPE CARTRIDGE:SEMI-AUTO QC/CAL PRGM V1.0	80009	020-0979-00
	061-2785-00			1		SHEET,TECHNICAL:INSTR	80009	061-2785-00

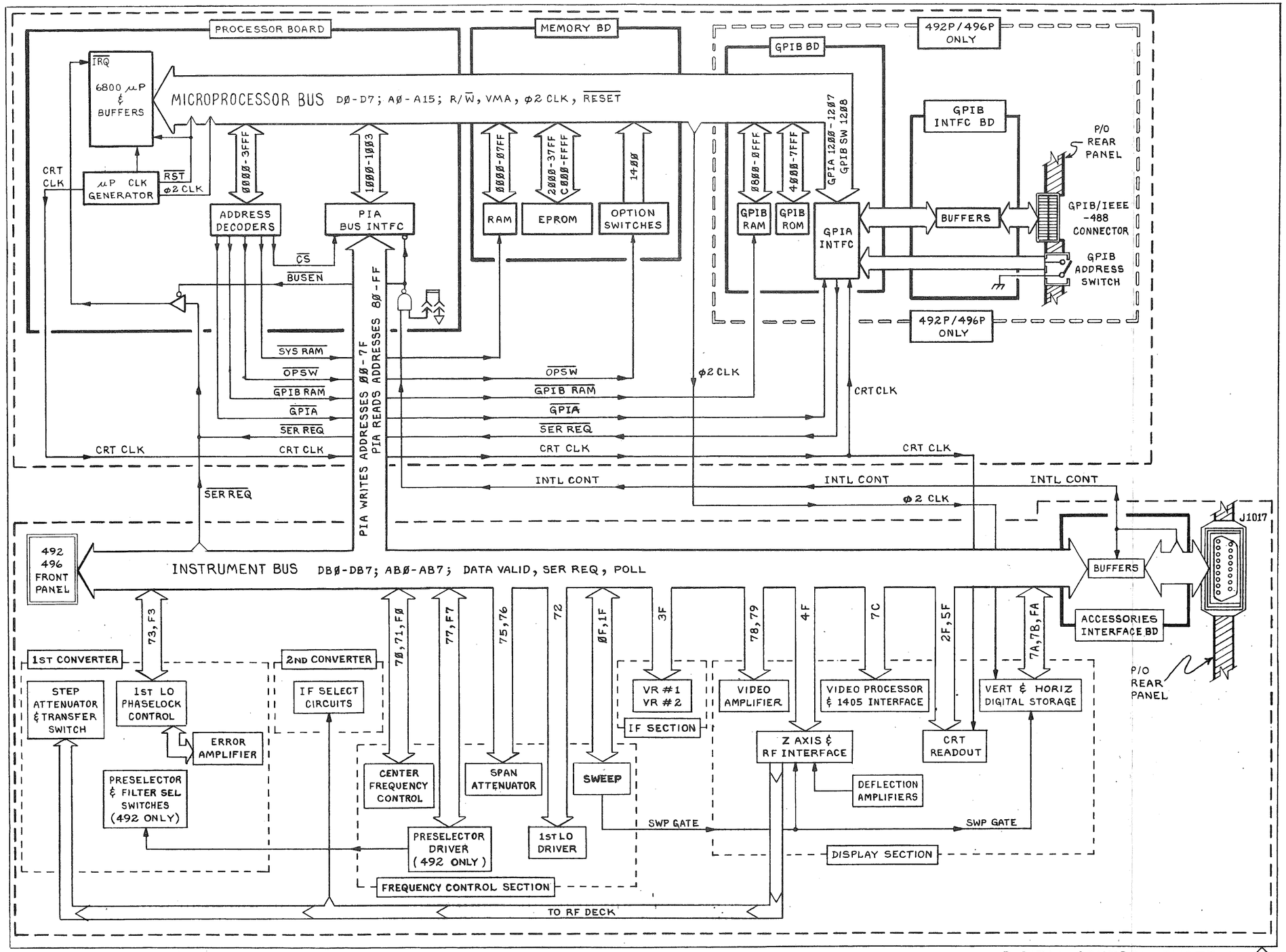
PROCESSOR BOARD
MEMORY BD
GPIB BD
492P/496P ONLY
IRQ
6800 μP & BUFFERS
MICROPROCESSOR BUS D0-D7; A0-A15; R/W, VMA, φ2 CLK, RESET
CRT CLK
μP CLK GENERATOR
RST
φ2 CLK
0000-3FFF
1000-1003
0000-07FF
2000-37FF C000-FFFF
1400
0800-0FFF
4000-7FFF
GPIA 1200-1207 GPIB SW 1208
GPIB INTFC BD
P/O REAR PANEL
ADDRESS DECODERS
PIA BUS INTFC
RAM
EPROM
OPTION SWITCHES
GPIB RAM
GPIB ROM
GPIA INTFC
BUFFERS
GPIB/IEEE -488 CONNECTOR
GPIB ADDRESS SWITCH
CS
BUSEN
SYS RAM
OPSW
GPIB RAM
GPIA
SER REQ
CRT CLK
INTL CONT
φ2 CLK
PIA WRITES ADDRESSES 80-7F
PIA READS ADDRESSES 80-FF
SER REQ
492 496 FRONT PANEL
INSTRUMENT BUS DB0-DB7; AB0-AB7; DATA VALID, SER REQ, POLL
J1017
BUFFERS
ACCESSORIES INTERFACE BD
P/O REAR PANEL
73,F3
70,71,F0
77,F7
75,76
72
0F,1F
3F
78,79
4F
7C
2F,5F
7A,78,FA
1ST CONVERTER
2ND CONVERTER
STEP ATTENUATOR & TRANSFER SWITCH
1ST LO PHASELOCK CONTROL
ERROR AMPLIFIER
IF SELECT CIRCUITS
PRESELECTOR & FILTER SEL SWITCHES (492 ONLY)
CENTER FREQUENCY CONTROL
SPAN ATTENUATOR
SWEEP
PRESELECTOR DRIVER (492 ONLY)
1ST LO DRIVER
VR #1 VR #2
IF SECTION
VIDEO AMPLIFIER
VIDEO PROCESSOR & 1405 INTERFACE
VERT & HORIZ DIGITAL STORAGE
Z AXIS & RF INTERFACE
CRT READOUT
DEFLECTION AMPLIFIERS
SWP GATE
DISPLAY SECTION
FREQUENCY CONTROL SECTION
TO RF DECK

PROCESSOR BOARD

MEMORY BD

492P/496P ONLY

GPIB BD

6800 μP & BUFFERS

IRQ

R

MICROPROCESSOR BUS D0-D7; A0-A15; R/W, VMA, φ2 CLK, RESET

GPIA 1200-1207 GPIB SW 1208

GPIB INTFC BD

P/O FRONT PANEL

GPIB/IEEE -488 CONNECTOR

BUFFERS

μP CLK GENERATOR

RESET

φ2 CLK

0000 - 3FFF

1000 - 1003

0000 - 07FF

2000 - 37FF C000 - FFFF

1400

0800 - 0FFF

4000 - 7FFF

GPIA INTFC

ADDRESS DECODERS

PIA BUS INTFC

RAM

EPROM

OPTION SWITCHES

GPIB RAM

GPIB ROM

GPIB ADDRESS SWITCH

CRT CLK

CS

BUSEN

NC

492 OPT. 8

492

496

INSTRUMENT SELECTOR SWITCH

SYS RAM

OPSW

GPIB RAM

GPIA

CRT CLK

SYS RST

SER REQ

PIA WRITES ADDRESSES 00-7F
PIA READS ADDRESSES 80-FF

SYSTEM RESET SWITCH

P1019

ACCESSORIES CONNECTOR

INSTRUMENT BUS DB0-DB7; AB0-AB7; DATA VALID, POLL, SER REQ

INTL CONT

067-1137-99

FUNCTIONAL BLOCK DIAGRAM

2

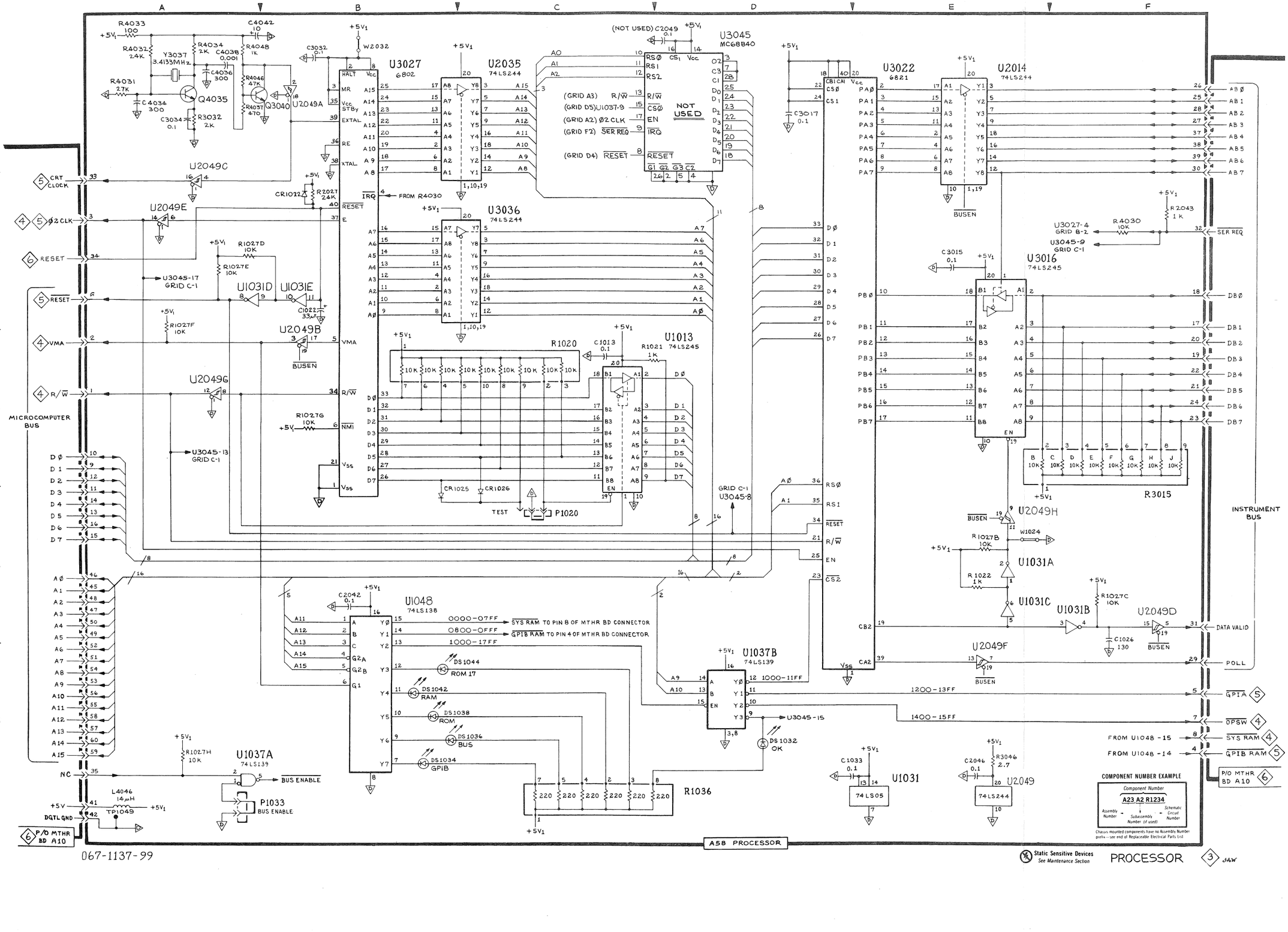

U3027
6802
U2035
74LS244
U3045
MC68B40
U3022
6821
U2014
74LS244
U3036
74LS244
U3016
74LS245
U1013
74LS245
R1020
U1048
74LS138
U1037B
74LS139
U1037A
74LS139
U1031
74LS05
U2049
74LS244
R1036
P1020
P1033
Q4035
Q3040
Y3037
3.4133MHz
U2049A
U2049B
U2049C
U2049D
U2049E
U2049F
U2049G
U2049H
U1031A
U1031B
U1031C
U1031D
U1031E
NOT USED
MICROCOMPUTER BUS
INSTRUMENT BUS
CRT CLOCK
Ø2 CLK
RESET
VMA
R/W
NC
DGTL GND
P/O MTHR BD A10
BUS ENABLE
DATA VALID
POLL
GPIA
OPSW
SYS RAM
GPIB RAM
FROM U1048 -15
FROM U1048 -14
0000-07FF
0800-0FFF
1000-17FF
1000-11FF
1200-13FF
1400-15FF
SYS RAM TO PIN 8 OF MTHR BD CONNECTOR
GPIB RAM TO PIN 4 OF MTHR BD CONNECTOR
FROM R4030
(NOT USED) C2049
(GRID A3) R/W
(GRID D5) U1037-9
(GRID A2) Ø2 CLK
(GRID F2) SER REQ
(GRID D4) RESET
GRID C-1 U3045-8
U3045-17 GRID C-1
U3045-13 GRID C-1
U3027-4 GRID B-2
U3045-9 GRID C-1
U3045-15
DS1044 ROM 17
DS1042 RAM
DS1038 ROM
DS1036 BUS
DS1034 GPIB
DS1032 OK
TEST
COMPONENT NUMBER EXAMPLE
Component Number
A23 A2 R1234
Assembly Number
Subassembly Number (if used)
Schematic Circuit Number
Chassis mounted components have no Assembly Number prefix—see end of Replaceable Electrical Parts List
A58 PROCESSOR
067-1137-99
Static Sensitive Devices
See Maintenance Section
PROCESSOR

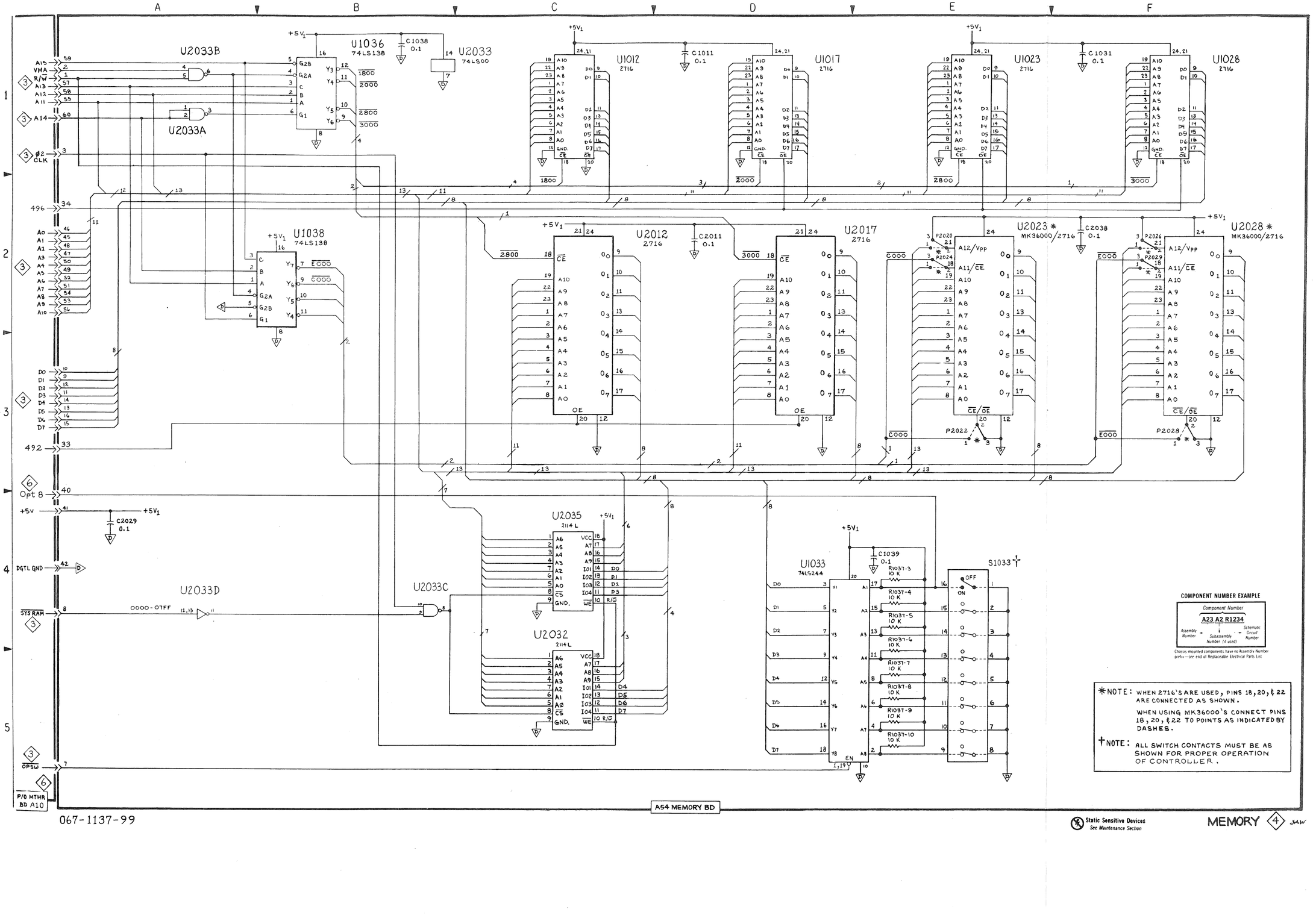

COMPONENT NUMBER EXAMPLE

Component Number: A23 A2 R1234

Assembly Number – Subassembly Number (if used) – Schematic Circuit Number

Chassis mounted components have no Assembly Number prefix — see end of Replaceable Electrical Parts List

*NOTE: WHEN 2716'S ARE USED, PINS 18, 20, & 22 ARE CONNECTED AS SHOWN.

WHEN USING MK36000'S CONNECT PINS 18, 20, & 22 TO POINTS AS INDICATED BY DASHES.

†NOTE: ALL SWITCH CONTACTS MUST BE AS SHOWN FOR PROPER OPERATION OF CONTROLLER.

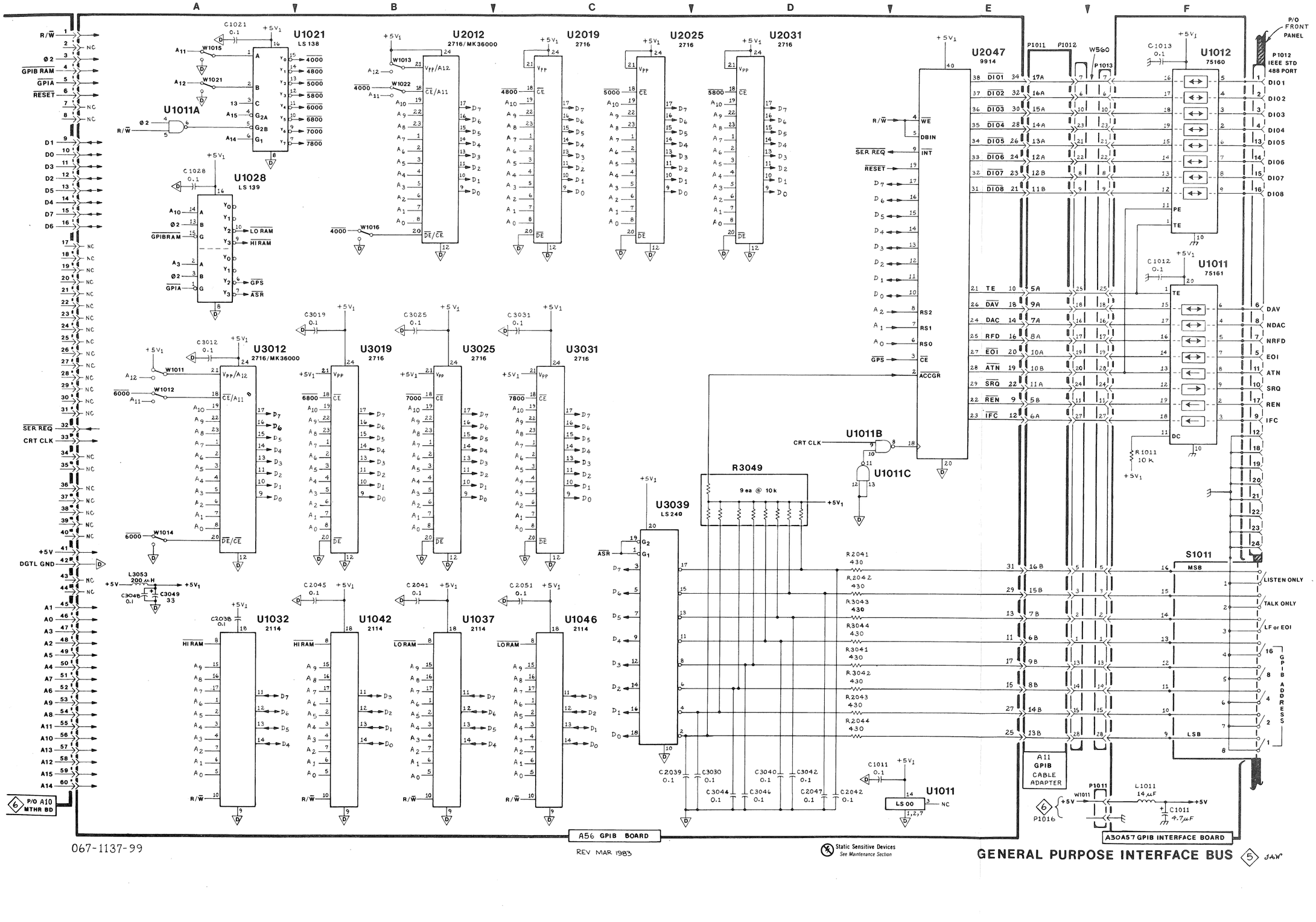
A
B
C
D
E
F
1
2
3
4
5
R/W
Ø2
GPIB RAM
GPIA
RESET
D1
D0
D3
D2
D5
D4
D7
D6
SER REQ
CRT CLK
+5V
DGTL GND
A1
A0
A3
A2
A5
A4
A7
A6
A9
A8
A11
A10
A13
A12
A15
A14
NC
P/O A10 MTHR BD
U1021
LS 138
C1021 0.1
W1015
W1021
U1011A
W1012
W1014
L3053 200 µH
C3048 0.1
C3049 33
U1028
LS 139
C1028 0.1
GPIBRAM
GPIA
LO RAM
HI RAM
GPS
ASR
U2012
2716/MK36000
W1013
W1022
W1016
U2019
2716
U2025
2716
U2031
2716
U3012
2716/MK36000
W1011
W1012
W1014
C3012 0.1
U3019
2716
C3019 0.1
U3025
2716
C3025 0.1
U3031
2716
C3031 0.1
U1032
2114
C2038 0.1
U1042
2114
C2045 0.1
U1037
2114
C2041 0.1
U1046
2114
C2051 0.1
U3039
LS 240
R3049
9 ea @ 10k
R2041 430
R2042 430
R3043 430
R3044 430
R3041 430
R3042 430
R2043 430
R2044 430
C2039 0.1
C3030 0.1
C3040 0.1
C3042 0.1
C3044 0.1
C3046 0.1
C2047 0.1
C2042 0.1
U1011B
U1011C
U1011
LS 00
C1011 0.1
U2047
9914
WE
DBIN
INT
RESET
RS2
RS1
RS0
CE
ACCGR
P1011
P1012
W560
P1013
U1012
75160
C1013 0.1
P/O FRONT PANEL
P1012 IEEE STD 488 PORT
DIO1
DIO2
DIO3
DIO4
DIO5
DIO6
DIO7
DIO8
PE
TE
DC
R1011 10 K
U1011
75161
C1012 0.1
DAV
NDAC
NRFD
EOI
ATN
SRQ
REN
IFC
S1011
MSB
LSB
LISTEN ONLY
TALK ONLY
LF or EOI
GPIB ADDRESS
A11 GPIB CABLE ADAPTER
P1011
W1011
L1011 14 µF
C1011 4.7µF
P1016
A56 GPIB BOARD
A30A57 GPIB INTERFACE BOARD
Static Sensitive Devices
See Maintenance Section
GENERAL PURPOSE INTERFACE BUS
067-1137-99
REV MAR 1983

P1019 PIN No. SEQUENCE
FRONT VIEW

NOTES:
* U100 IS HEATSINKED TO A METAL BRACKET.

UNLABLED CONNECTOR PINS ARE USED.

5300 INSTRUMENT SELECTOR

P/O FRONT PANEL
DS100
POWER ON
P/O A30 A57 GPIB INTER BD
5100
P1015
P1016
P1011
R1015 150 +5V
+5V
P1017
P1018
(OPT 08)
(492)
(496)
1(F+R) 2(F+R) 3(F+R) 4(F+R) 4(R)
1(R) 2(R) 3(R) 4(R)
CR1011
492 B01-B02
492 B01-B02 OPT 08
492 B01-B02
492 B03-B04 OPT 08
492 B05 & UP
492 B05 & UP OPT 08
496 B01
496 B02 & UP
(A)
(B)
P/O FRONT PANEL
J1010 EXT PRESEL OUT
J1012 MARKER/VIDEO IN
J1013 I/O
P1011
+33.5 V
33.5 V RETURN
11.5 V RTN
+11.5 V
U100* LM323
+5V
C1011 0.47 (283-0134)
C1012 100μF 25 V (290-0942)
C1013 100μF 25 V (290-0942)
F1011 2 A 250V
R1011 680 3W 308-0553
R1016 1.5K
R1017 1.5K
+5V
TP1012 +5V
TP1011
VR1011 15V -0405

EXT VIDEO SELECT ON OFF
REMOTE SELECT
J1020
S200
RESET
R1018 62
ACCESSORY CABLE
P1019
EXT VIDEO SELECT
GROUND (GND)
INTERNAL CONTROL
GND
AB7 AB6 AB5 AB4 AB3 AB2 AB1 ABØ
DATA VALID (DV)
SER REQ (SR)
POLL
DATA BUS ENABLE
DBØ DB1 DB2 DB3 DB4 DB5 DB6 DB7
R1021 82
C1014 220
CR1020
SR
R1020 2K
R1022 430

VMA GPIB RAM RESET SYS RAM DØ D2 D4 D6 DBØ DB2 DB4 DB6 ABØ AB2 AB7 SR AB5 GND AØ A2 A4 A6 A8 A10 A12 A14
R/W φ2 CLK GPIA OPSW D1 D3 D5 D7 DB1 DB3 DB5 DB7 AB1 AB3 POLL DV CRT CLK AB4 AB6 +5V A1 A3 A5 A7 A9 A11 A13 A15

GPIB 3
MEMORY 2
PROCESSOR 1

A10 MOTHER BD

067-1137-99

MOTHER BOARD 6 sht

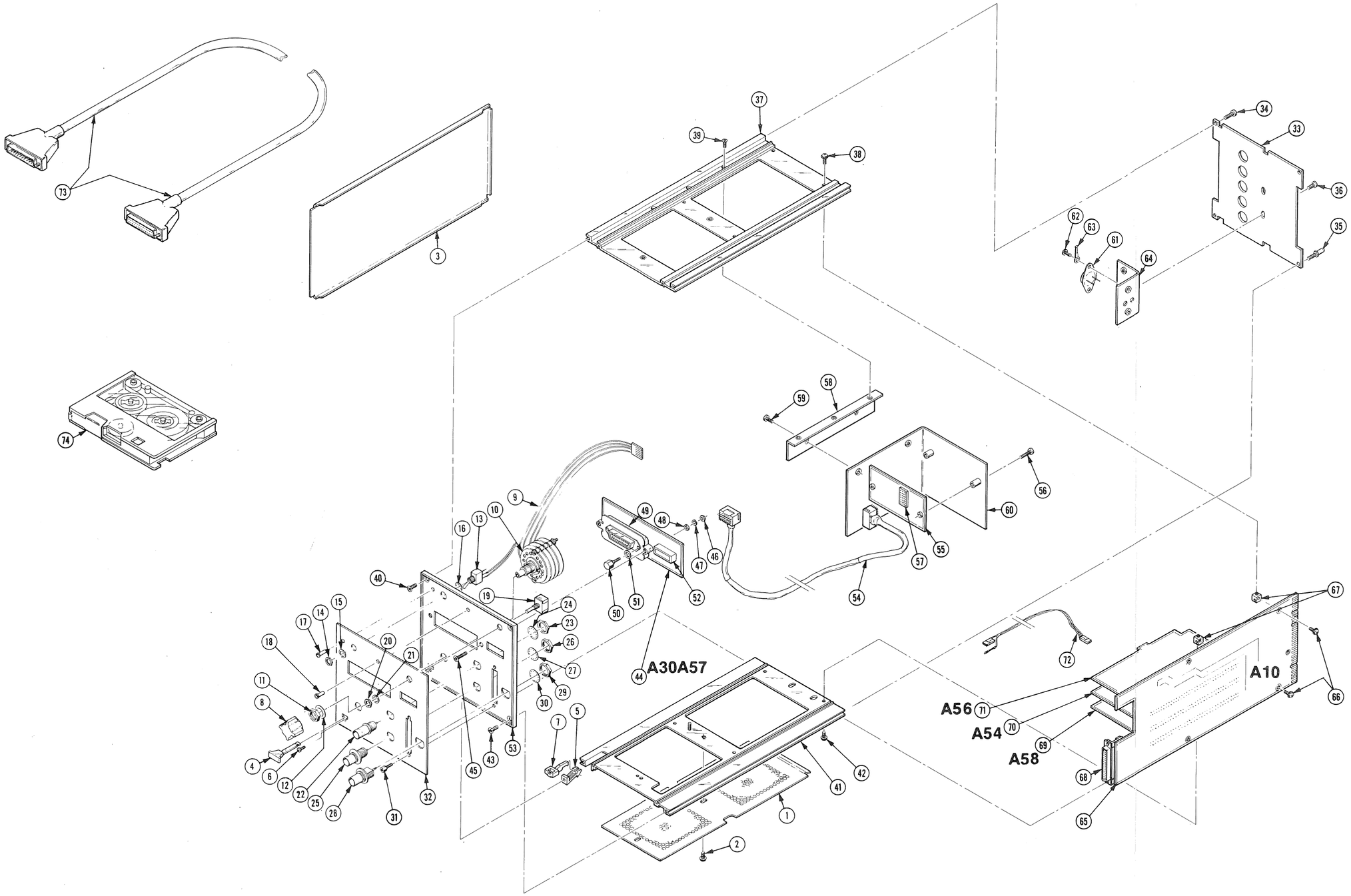

067-1137-99 GPIB/ACCESSORY INTERFACE