Service Manual

Tektronix

2465B & 2467B Oscilloscopes

070-6863-01

Warning
The servicing instructions are for use by qualified personnel only. To avoid personal injury, do not perform any servicing unless you are qualified to do so. Refer to the Safety Summary prior to performing service.

Please check for change information at the rear of this manual.

Instrument Serial Numbers

Each instrument manufactured by Tektronix has a serial number on a panel insert or tag, or stamped on the chassis. The first letter in the serial number designates the country of manufacture. The last five digits of the serial number are assigned sequentially and are unique to each instrument. Those manufactured in the United States have six unique digits. The country of manufacture is identified as follows:

B010000	Tektronix, Inc., Beaverton, Oregon, USA
E200000	Tektronix United Kingdom, Ltd., London
J300000	Sony/Tektronix, Japan
H700000	Tektronix Holland, NV, Heerenveen, The Netherlands

Instruments manufactured for Tektronix by external vendors outside the United States are assigned a two digit alpha code to identify the country of manufacture (e.g., JP for Japan, HK for Hong Kong, IL for Israel, etc.).

Tektronix, Inc., P.O. Box 500, Beaverton, OR 97077

Printed in U.S.A.

Copyright © Tektronix, Inc., 1988. All rights reserved. Tektronix products are covered by U.S. and foreign patents, issued and pending. The following are registered trademarks: TEKTRONIX, TEK, TEKPROBE, and SCOPE-MOBILE.

WARRANTY

Tektronix warrants that this product will be free from defects in materials and workmanship for a period of three (3) years from the date of shipment. If any such product proves defective during this warranty period, Tektronix, at its option, either will repair the defective product without charge for parts and labor, or will provide a replacement in exchange for the defective product.

In order to obtain service under this warranty, Customer must notify Tektronix of the defect before the expiration of the warranty period and make suitable arrangements for the performance of service. Customer shall be responsible for packaging and shipping the defective product to the service center designated by Tektronix, with shipping charges prepaid. Tektronix shall pay for the return of the product to Customer if the shipment is to a location within the country in which the Tektronix service center is located. Customer shall be responsible for paying all shipping charges, duties, taxes, and any other charges for products returned to any other locations.

This warranty shall not apply to any defect, failure or damage caused by improper use or improper or inadequate maintenance and care. Tektronix shall not be obligated to furnish service under this warranty a) to repair damage resulting from attempts by personnel other than Tektronix representatives to install, repair or service the product; b) to repair damage resulting from improper use or connection to incompatible equipment; or c) to service a product that has been modified or integrated with other products when the effect of such modification or integration increases the time or difficulty of servicing the product.

THIS WARRANTY IS GIVEN BY TEKTRONIX WITH RESPECT TO THIS PRODUCT IN LIEU OF ANY OTHER WARRANTIES, EXPRESSED OR IMPLIED. TEKTRONIX AND ITS VENDORS DISCLAIM ANY IMPLIED WARRANTIES OF MERCHANTABILITY OR FITNESS FOR A PARTICULAR PURPOSE. TEKTRONIX' RESPONSIBILITY TO REPAIR OR REPLACE DEFECTIVE PRODUCTS IS THE SOLE AND EXCLUSIVE REMEDY PROVIDED TO THE CUSTOMER FOR BREACH OF THIS WARRANTY. TEKTRONIX AND ITS VENDORS WILL NOT BE LIABLE FOR ANY INDIRECT, SPECIAL, INCIDENTAL, OR CONSEQUENTIAL DAMAGES IRRESPECTIVE OF WHETHER TEKTRONIX OR THE VENDOR HAS ADVANCE NOTICE OF THE POSSIBILITY OF SUCH DAMAGES.

TABLE OF CONTENTS

Page

LIST OF ILLUSTRATIONS iii
LIST OF TABLES iv
OPERATORS SAFETY SUMMARY vi
SERVICING SAFETY SUMMARY vii

SECTION 1 SPECIFICATION
INTRODUCTION 1-1
PERFORMANCE CONDITIONS 1-1

SECTION 2 OPERATING INFORMATION
SAFETY 2-1
LINE VOLTAGE SELECTION 2-1
LINE FUSE 2-1
POWER CORD 2-1
INSTRUMENT COOLING 2-1
OPERATING INFORMATION 2-1
START-UP 2-2
REPACKAGING FOR SHIPMENT .. 2-2

SECTION 3 THEORY OF OPERATION (SN B050000 & ABOVE)
INTRODUCTION 3a-1
SECTION ORGANIZATION 3a-1
HYBRID AND INTEGRATED CIRCUIT DESCRIPTIONS 3a-1
BLOCK DIAGRAM 3a-1
BLOCK DESCRIPTION 3a-1
DETAILED CIRCUIT DESCRIPTION 3a-5
INTRODUCTION 3a-5
PROCESSOR AND DIGITAL CONTROL 3a-5
FRONT-PANEL SCANNING and ANALOG CONTROLS 3a-9
FRONT-PANEL CONTROLS 3a-11
ATTENUATORS AND PREAMPS .. 3a-13
DISPLAY SEQUENCER, TRIGGERS, AND SWEEPS 3a-17
VERTICAL CHANNEL SWITCH AND OUTPUT AMPLIFIERS 3a-23
READOUT 3a-27
HIGH VOLTAGE POWER SUPPLY AND CRT FOR 2465B ONLY 3a-35
HIGH VOLTAGE POWER SUPPLY AND MCP-CRT FOR 2467B ONLY 3a-40
LOW VOLTAGE POWER SUPPLY. 3a-46
LOW-VOLTAGE REGULATORS 3a-51
POWER DISTRIBUTION 3a-53
INTERCONNECTIONS 3a-53

Page

SECTION 3 THEORY OF OPERATION (SN B049999 & BELOW)
INTRODUCTION 3-1
SECTION ORGANIZATION 3-1
HYBRID AND INTEGRATED CIRCUIT DESCRIPTIONS 3-1
BLOCK DIAGRAM 3-1
BLOCK DESCRIPTION 3-1
DETAILED CIRCUIT DESCRIPTION 3-5
INTRODUCTION 3-5
PROCESSOR AND DIGITAL CONTROL 3-5
FRONT-PANEL SCANNING and ANALOG CONTROLS 3-9
FRONT-PANEL CONTROLS 3-11
ATTENUATORS AND PREAMPS .. 3-13
DISPLAY SEQUENCER, TRIGGERS, AND SWEEPS 3-17
VERTICAL CHANNEL SWITCH AND OUTPUT AMPLIFIERS 3-23
READOUT 3-27
HIGH VOLTAGE POWER SUPPLY AND CRT FOR 2465B ONLY 3-35
HIGH VOLTAGE POWER SUPPLY AND MCP-CRT FOR 2467B ONLY 3-40
LOW VOLTAGE POWER SUPPLY. 3-46
LOW-VOLTAGE REGULATORS 3-51
POWER DISTRIBUTION 3-53
INTERCONNECTIONS 3-53

SECTION 4 PERFORMANCE CHECK AND FUNCTIONAL VERIFICATION
INTRODUCTION 4-1
PREPARATION 4-1
VERTICAL 4-4
TRIGGERING 4-15
HORIZONTAL 4-20
PARAMETRIC MEASUREMENTS CHECK 4-27
COUNTER/TIMER/TRIGGER CHECKS 4-29
HORIZONTAL (cont) 4-34
CALIBRATOR, EXTERNAL Z-AXIS AND GATE OUTPUTS 4-36
ADDITIONAL FUNCTIONAL VERIFICATION 4-38
WORD RECOGNIZER CHECKS 4-40

TABLE OF CONTENTS (cont)

Page

SECTION 5 ADJUSTMENT PROCEDURE
INTRODUCTION 5-1
PARTIAL PROCEDURE 5-2
PREPARATION FOR ADJUSTMENT 5-2
POWER SUPPLIES AND DAC REF ADJUSTMENTS 5-2
2467B CRT ADJUSTMENTS 5-4
2465B CRT ADJUSTMENTS 5-7
CH 1 AND CH 2 INPUT CAPACITANCE, AND VERTICAL READOUT JITTER ADJUSTMENTS 5-10
AUTOMATIC CALIBRATION CONSTANTS, HORIZONTAL AND VERTICAL GAIN, CENTERING, AND TRANSIENT RESPONSE ADJUSTMENTS 5-13
CAL 01—HORIZONTAL 5-13
CAL 02—VERTICAL 5-16
CAL 03—TRIGGERING 5-18
CAL 04—CH 2 DELAY ENABLE/DISABLE 5-19
CAL 05—Set HRS ON and PWR ON/OFF CYCLES 5-20
CAL 06—VERTICAL TRANSIENT RESPONSE 5-20
CAL O7—READOUT CENTERING AND GAIN 5-22
CAL O9—PARAMETRIC MEASUREMENTS 5-22
DYNAMIC CENTERING, DC BALANCE, AND X-Y PHASE DIFFERENTIAL ADJUSTMENTS 5-25

SECTION 6 MAINTENANCE
STATIC-SENSITIVE COMPONENTS 6-1
PREVENTIVE MAINTENANCE 6-2
INTRODUCTION 6-2
GENERAL CARE 6-2
INSPECTION AND CLEANING 6-2
LUBRICATION 6-4
SEMICONDUCTOR CHECKS 6-4
PERIODIC READJUSTMENT 6-4
TROUBLESHOOTING 6-5
INTRODUCTION 6-5
TROUBLESHOOTING AIDS 6-5
TROUBLESHOOTING EQUIPMENT 6-7
TROUBLESHOOTING TECHNIQUES 6-7
DIAGNOSTIC ROUTINES 6-10
CORRECTIVE MAINTENANCE 6-20
INTRODUCTION 6-20
MAINTENANCE PRECAUTIONS 6-20
OBTAINING REPLACEMENT PARTS 6-20
MAINTENANCE AIDS 6-21
INTERCONNECTIONS 6-21
TRANSISTORS, INTEGRATED CIRCUITS, AND HYBRID CIRCUITS 6-22
SOLDERING TECHNIQUES 6-22
REMOVAL AND REPLACEMENT INSTRUCTIONS 6-24

SECTION 7 OPTIONS
INTRODUCTION 7-1
POWER CORD OPTIONS 7-1
OPTION 01 (2465B ONLY) 7-1
OPTION 1R 7-1
OPTION 05 7-2
OPTIONS 06 AND 09 7-2
OPTION 10 7-2
OPTION 11 7-2

SECTION 8 2465B REPLACEABLE ELECTRICAL PARTS

SECTION 9 2467B REPLACEABLE ELECTRICAL PARTS

SECTION 10 DIAGRAMS
ACRONYM DICTIONARY

SECTION 11 2465B REPLACEABLE MECHANICAL PARTS

SECTION 12 2467B REPLACEABLE MECHANICAL PARTS

CHANGE INFORMATION

Diagnostic and Troubleshooting Information:
DIAGNOSTIC ROUTINES **6-10**
TROUBLESHOOTING CHARTS ..... **SECTION 10**

LIST OF ILLUSTRATIONS

Figure		Page
1-1	2465B Dimensional drawing	1-22
1-2	2467B Dimensional drawing	1-23
2-1	Line selector switch, line fuse, and detachable power cord	2-2
	(For SN B050000 & Above)	
3-1	Instrument block diagram	3a-2
3-1	Instrument block diagram (cont)	3a-3
3-2	Address decoding	3a-7
3-3	Front-panel switch matrix	3a-12
3-4	Scale illumination circuit	3a-16
3-5	Sweep generator	3a-22
3-6	Developing the readout display	3a-28
3-7	Readout display priorities	3a-32
3-8	Timing of Refresh Prioritizer	3a-33
3-9	Dc restorer circuit (2465B only)	3a-38
3-10	Dc restorer circuit (2467B only)	3a-43
3-11	Timing relationships of the Inverter Drive signals	3a-48
3-12	Simplified schematic of control network	3a-49
	(For SN B049999 & Below)	
3-1	Instrument block diagram	3-2
3-1	Instrument block diagram (cont)	3-3
3-2	Address decoding	3-7
3-3	Front-panel switch matrix	3-12
3-4	Scale illumination circuit	3-16
3-5	Sweep generator	3-22
3-6	Developing the readout display	3-28
3-7	Readout display priorities	3-32
3-8	Timing of Refresh Prioritizer	3-33
3-9	Dc restorer circuit (2465B only)	3-38
3-10	Dc restorer circuit (2467B only)	3-43
3-11	Timing relationships of the Inverter Drive signals	3-48
3-12	Simplified schematic of control network	3-49
6-1	Multipin Connector Orientation	6-6
6-2	Ribbon Cable Removal	6-26
6-3	Power Switch Push Button Disassembly	6-31
10-1	Color codes for resistors and capacitors.	
10-2	Semiconductor lead configurations.	
10-3	Locating components on schemcatic diagrams and circuit board illustrations.	
10-4	Instrument block diagram.	
10-5	A5—Control board.	
10-6	A6—Front Panel board.	
10-7	A1—Main and A8—Scale Illumination boards.	
10-8	A15—Holdoff board.	
10-9	A14—Dynamic Centering board.	
10-10	A4—Readout board.	
10-11	A9—2467B High Voltage board.	
10-12	A9—2465B High Voltage board.	
10-13	A2—Regulator and A3—Inverter boards.	

LIST OF TABLES

Table		Page
1-1	2465B/2467B Electrical Characteristics	1-2
1-2	Option 06 (C/T/T) Electrical Characteristics	1-13
1-3	Resolution Selections	1-19
1-4	Resolution Selections	1-19
1-5	Option 09 (WR) Electrical Characteristics	1-20
1-6	2465B Mechanical Characteristics	1-21
1-7	2467B Mechanical Characteristics	1-22
1-8	Environmental Requirements	1-23
2-1	Power Cord and Voltage Data	2-3
	(For SN B050000 & Above)	
3-1	Intensity Control	3a-19
3-2	Trigger Source Selection	3a-21
3-3	Vertical Display Selection	3a-24
3-4	Horizontal Display Selection	3a-26
3-5	Blanking and Intensity Control Selection	3a-27
3-6	Readout Display Mode Selection	3a-31
3-7	Operation of Prioritizer Shift Register	3a-32
	(For SN B049999 & Below)	
3-1	Intensity Control	3-19
3-2	Trigger Source Selection	3-21
3-3	Vertical Display Selection	3-24
3-4	Horizontal Display Selection	3-26
3-5	Blanking and Intensity Control Selection	3-27
3-6	Readout Display Mode Selection	3-31
3-7	Operation of Prioritizer Shift Register	3-32
4-1	Test Equipment Required	4-2
4-2	Accuracy Limits	4-7
4-3	Accuracy Limits	4-9
4-4	CH 3 and CH 4 Accuracy Limits	4-11
4-5	CH 1 or CH 2 Triggering Conditions	4-16
4-6	CH 3 or CH 4 Triggering Conditions	4-17
4-7	Settings for A and B Timing Accuracy Checks	4-22
4-8	Horizontal Timing Accuracy Checked Against the Graticule	4-23
4-9	Delta Time Display Accuracy	4-25
4-10	Delayed Sweep Delta Time Accuracy	4-26
4-11	Parametric Measurement Period Checks	4-27
4-12	Parametric Measurement Volts Checks	4-28
4-13	Data Setup Time Checks	4-41
4-14	Data Hold Time Checks	4-42
4-15	Minimum Clock Pulse Width Checks	4-42
4-16	Delay From Selected Edge to WORD RECOG OUT Checks	4-43
4-17	Word Recognition Delay	4-43
5-1	Power Supply Voltage and Ripple Tolerances	5-3
5-2	Horizontal Timing	5-15
5-3	Horizontal Timing	5-16
5-4	Vertical Calibration Signals	5-17
5-5	Vertical Calibration Signals	5-17
5-6	Parametric Measurement Calibration	5-23

LIST OF TABLES (cont)

6-1 Susceptibility to Static Discharge Damage 6-1
6-2 External Inspection Check List 6-2
6-3 Internal Inspection Check List 6-3
6-4 Sequence of Diagnostic Tests 6-11
6-5 Sequence of Exerciser Routines 6-13
6-6 Kernel Test Failure Codes 6-13
6-7 Front-Panel LED Option Codes 6-13
6-8 Front-Panel LED Device Codes 6-14
6-9 Potentiometer Codes and Values (Exerciser 01) 6-16
6-10 Pots and Switches Column 6-17
6-11 NOP Test Data 6-19
6-12 Maintenance Aids 6-21

OPERATORS SAFETY SUMMARY

The general safety information in this part of the summary is for both operating and servicing personnel. Specific warnings and cautions will be found throughout the manual where they apply and do not appear in this summary.

Terms in This Manual

CAUTION statements identify conditions or practices that could result in damage to the equipment or other property.

WARNING statements identify conditions or practices that could result in personal injury or loss of life.

Terms as Marked on Equipment

CAUTION indicates a personal injury hazard not immediately accessible as one reads the markings, or a hazard to property, including the equipment itself.

DANGER indicates a personal injury hazard immediately accessible as one reads the marking.

Symbols in This Manual

⚠ This symbol indicates where applicable cautionary or other information is to be found. For maximum input voltage see Table 1-1.

Symbols as Marked on Equipment

ϟ DANGER — High voltage.

⏚ Protective ground (earth) terminal.

⚠ ATTENTION — Refer to manual.

Power Source

This product is intended to operate from a power source that will not apply more than 250 volts rms between the supply conductors or between either supply conductor and ground. A protective ground connection by way of the grounding conductor in the power cord is essential for safe operation.

Grounding the Product

This product is grounded through the grounding conductor of the power cord. To avoid electrical shock, plug the power cord into a properly wired receptacle before making any connections to the product input or output terminals. A protective ground connection by way of the grounding conductor in the power cord is essential for safe operation.

Danger Arising from Loss of Ground

Upon loss of the protective-ground connection, all accessible conductive parts (including knobs and controls that may appear to be insulated) can render an electric shock.

Use the Proper Power Cord

Use only the power cord and connector specified for your product.

Use only a power cord that is in good condition.

For detailed information on power cords and connectors, see Table 2-1.

Use the Proper Fuse

To avoid fire hazard, use only a fuse of the correct type, voltage rating and current rating as specified in the parts list for your product.

Do Not Operate in Explosive Atmospheres

To avoid explosion, do not operate this instrument in an explosive atmosphere unless it has been specifically certified for such operation.

Do Not Remove Covers or Panels

To avoid personal injury, do not remove the product covers or panels. Do not operate the instrument without the covers and panels properly installed.

SERVICING SAFETY SUMMARY

FOR QUALIFIED SERVICE PERSONNEL ONLY

Refer also to the preceding Operators Safety Summary.

Do Not Service Alone

Do not perform internal service or adjustment of this product unless another person capable of rendering first aid and resuscitation is present.

Use Care When Servicing With Power On

Dangerous voltages exist at several points in this product. To avoid personal injury, do not touch exposed connections or components while power is on.

Disconnect power before removing protective panels, soldering, or replacing components.

Power Source

This product is intended to operate from a power source that does not apply more than 250 volts rms between the supply conductors or between either supply conductor and ground. A protective ground connection by way of the grounding conductor in the power cord is essential for safe operation.

SPECIFICATION

INTRODUCTION

The TEKTRONIX 2465B and 2467B Oscilloscopes are portable 400-MHz bandwidth instruments having four-channel vertical deflection systems. Channel 1 and Channel 2 provide calibrated deflection factors from 2 mV per division to 5 V per division. For each of these channels, input impedance is selectable between two values: either 1 MΩ in parallel with 15 pF, or 50 Ω internal termination. Input-signal coupling with 1 MΩ impedance can be selected as either AC or DC. Channel 3 and Channel 4 have deflection factors of either 0.1 V or 0.5 V per division. Each of these channels has an input impedance of 1 MΩ in parallel with 15 pF, with DC input-signal coupling.

The trigger system works automatically for most signals. They operate in various modes, from any channel, with couplings for a wide range of signals. The trigger system gives stable displays from dc to 500 MHz.

The horizontal deflection system provides calibrated sweep speeds from 1.5 s per division to 500 ps per division, including the effects of the X10 magnifier and the calibrated variable between the 1-2-5 steps. Horizontal displays include A-Sweep, B-Sweep (delayed), A alternated with B, and CH 1 (for X/Y displays).

The AUTO, SAVE, and RECALL features save time and prevent errors. Pressing the AUTO Setup button gives a workable setup for almost any signal. For repetitive measurements, the Save and Recall functions record and immediately or sequentially restore as many as 30 instrument setups. The SETUP buttons operate all instrument functions, including the extended function options.

Direct, on-screen readouts of time measurements, voltage measurements, scale factors, trigger levels, and auxiliary information also save time and improve operator confidence.

The 2467B yields 4 divisions/ns visual writing rate. This is about 100 times faster than conventional, high-performance oscilloscopes. The 2467B visibly displays any signal, at any repetition-rate, at any sweep speed, in typical room light. Visible single-shots include 1 ns steps at 500 ps/division.

The instruments are shipped with the following standard accessories:

2 Probe packages (2465B)
4 Probe packages (2467B)
1 Snap-lock accessories pouch
1 Zip-lock accessories pouch
1 Operators manual
1 Power cord (installed)
1 2-A, 250-V fuse
1 Clear plastic CRT filter
1 Blue plastic CRT filter (installed)
1 Front-panel cover
1 Operators pocket reference card

For part numbers and further information about both standard and optional accessories, refer to "Options and Accessories" (Section 7) of the instruments Operators manual or the Accessories information at the rear of this manual. Your Tektronix representative or local Tektronix Field Office can also provide accessories information and ordering assistance.

PERFORMANCE CONDITIONS

The following electrical characteristics (Table 1-1) are valid for the instrument when it has been adjusted at an ambient temperature between +20°C and +30°C, has had a warm-up period of at least 20 minutes, and is operating at an ambient temperature between −15°C and +55°C (unless otherwise noted).

Items listed in the "Performance Requirements" column define the measurement capabilities of the instruments. Supplementary measurement conditions may also be listed in the "Performance Requirement" column.

Mechanical characteristics are listed in Tables 1-6 and 1-7.

Environmental characteristics are given in Table 1-8. The oscilloscope meets the environmental requirements of MIL-T-28800C for Type III, Class 3, Style C equipment, with the humidity and temperature requirements defined in paragraphs 3.9.2.2, 3.9.2.3, and 3.9.2.4.

Table 1-1
2465B/2467B Electrical Characteristics

Characteristics	Performance Requirements
VERTICAL DEFLECTION SYSTEM—CHANNEL 1 AND CHANNEL 2	
Deflection Factor	
Range	2 mV/division to 5 V/division in a 1-2-5 sequence of 11 steps.
Accuracy	1 MΩ input, noninverted.
+15°C to +35°C	
On-Graticule Accuracy	Within ±2% at any VOLTS/DIV setting for a four or five-division signal centered on the screen.
ΔV Accuracy (using cursors over entire graticule area)	±(1.25% of reading +0.03 div + signal aberrations).
−15°C to +15°C and +35°C to +55°C	Add ±2% of reading.[a]
50 Ω Coupling	Add ±1% of reading.
CH 2 Inverted	Add ±1% of reading.
ΔV Range	±8 × VOLTS/DIV setting.[a]
V/DIV VARiable, noninverted	Continuously variable between VOLTS/DIV settings. Extends deflection factor to >12.5 V/division.
Frequency Response	Bandwidth is measured with a leveled, low distortion, 50-Ω source, sine-wave generator, terminated in 50 Ω. The reference signal amplitude is set at the lesser of 6 divisions or the maximum leveled amplitude. External termination bandwidth is check with a 4 division reference signal. Bandwidth with probe is checked using a BNC-to-probe-tip (013-0227-00) adapter. Bandwidth with external termination is checked using a BNC 50-Ω feed through terminator (011-0049-01).
−3 dB Bandwidth	Using standard accessory probe or internal 50-Ω termination.
+15°C to +35°C	
5 mV to 5 V	Dc to 400 MHz.[b]
2 mV	Dc to 350 MHz.[b]
−15°C to +15°C and +35°C to +55°C	
5 mV to 5 V	Dc to 350 MHz.[a]
2 mV	Dc to 300 MHz.[a]

[a]**Performance requirement not checked in manual.**

[b]**If the instrument is subjected to "greater than" 85% relative humidity, bandwidth is reduced by 50 MHz. After the instrument is subjected to "greater than" 85% relative humidity, it requires more than 50 hours of operation at "less than" 60% relative humidity before full bandwidth is restored.**

Table 1-1 (cont)

Characteristics	Performance Requirements
−4.7 dB Bandwidth	Using 50-Ω external termination on 1-MΩ input.
−15°C to +35°C	
5 mV to 5 V	Dc to 400 MHz.[b]
2 mV	Dc to 350 MHz.[b]
+35°C to +55°C	
5 mV to 5 V	Dc to 350 MHz.[a]
2 mV	Dc to 300 MHz.[a]
AC Coupled, Lower −3 dB Frequency	10 Hz or less.
With Standard Accessory Probe	1 Hz or less.[a]
Step Response Rise Time	Calculated from $T_r = 0.35/BW$.[a]
5 mV to 5 V	≤875 ps.
2 mV	≤1 ns.
Channel Isolation	≥100:1 attenuation of deselected channel at 100 MHz; ≥50:1 at 400 MHz, for an eight-division input signal from 5 mV per division to 500 mV per division, with equal VOLTS/DIV settings on both channels.
Displayed Channel 2 Signal Delay with Respect to Channel 1 Signal	Adjustable through a range of at least −500 ps to +500 ps.[a]
Input R and C (1 MΩ)	
Resistance	1 MΩ ±0.5%.[a]
Capacitance	15 pF ±2 pF.[a]
Maximum Input Voltage ⚠	
DC, AC, or GND Coupled	400 V (dc + peak ac). 800 V p-p ac at 10 kHz or less.[a]
Input R (50 Ω)	
Resistance	50 Ω ±1%.[a]
VSWR	
Dc to 300 MHz	≤1.3:1.[a]
300 to 400 MHz	≤1.5:1.[a]
Maximum Input Voltage ⚠	5 V rms, averaged for 1 second; ±50 V peak.[a]
Cascaded Operation	Channel 2 Vertical Signal Output into Channel 1 input; DC coupled using a 50 Ω RG-58C/U coaxial cable, with 1 MΩ DC or 1 MΩ AC Channel 1 input coupling; with Channel 1 and Channel 2 VOLTS/DIV set at 2 mV and 20 MHz Bandwidth Limit On.
Deflection Factor	200 μV per division ±10%.

[a]Performance requirement not checked in manual.

[b]If the instrument is subjected to "greater than" 85% relative humidity, bandwidth is reduced by 50 MHz. After the instrument is subjected to "greater than" 85% relative humidity, it requires more than 50 hours of operation at "less than" 60% relative humidity before full bandwidth is restored.

Table 1-1 (cont)

Characteristics	Performance Requirements
CMRR (ADD Mode with Channel 2 inverted)	At least 20:1 at 50 MHz for common-mode signals of eight divisions or less, with VAR VOLTS/DIV control adjusted for best CMRR at 50 kHz, at any VOLTS/DIV setting.
VERTICAL DEFLECTION SYSTEM—CHANNEL 3 AND CHANNEL 4	
Deflection Factors	
Values	100 mV and 500 mV per division.
Accuracy	Within ±10%.
Frequency Response	Bandwidth is measured with a leveled, low distortion, 50-Ω source, sine-wave generator, terminated in 50 Ω. The reference signal amplitude is set at the lesser of 6 divisions or the maximum leveled amplitude. External termination bandwidth is checked with a 4 division reference signal. Bandwidth with probe is checked using a BNC-to-probe-tip (013-0227-00) adapter. Bandwidth with external termination is checked using a BNC 50-Ω feed through terminator (011-0049-01).
− 3 dB Bandwidth	Using standard accessory probe.
+15°C to +35°C	Dc to 400 MHz.[b]
−15°C to +15°C and +35°C to +55°C	Dc to 350 MHz.[a]
−4.7 dB Bandwidth	Using 50-Ω external termination.
+15°C to +35°C	Dc to 400 MHz.[a] [b]
−15°C to +15°C and +35°C to +55°C	Dc to 350 MHz.[a]
Step Response Rise Time	≤875 ps (calculated from T_r=0.35/BW).[a]
Channel Isolation	≥50:1 attenuation of deselected channel at 100 MHz with an 8-division input signal.
Signal Delay Between Channel 1 and Either Channel 3 or Channel 4	Within ±1.0 ns, measured at the 50% points.[a]
Input Resistance	1 MΩ ±1%.[a]
Input Capacitance	15 pF ±3 pF.[a]
Maximum Input Voltage ⚠	400 V (dc + peak ac). 800 V p-p ac at 10 kHz or less.[a]

[a]Performance requirement not checked in manual.

[b]If the instrument is subjected to "greater than" 85% relative humidity, bandwidth is reduced by 50 MHz. After the instrument is subjected to "greater than" 85% relative humidity, it requires more than 50 hours of operation at "less than" 60% relative humidity before full bandwidth is restored.

Table 1-1 (cont)

Characteristics	Performance Requirements
VERTICAL DEFLECTION SYSTEM—ALL CHANNELS	
Low-frequency Linearity	0.1 division or less compression or expansion of a two-division, center-screen signal when positioned anywhere within the graticule area.
Bandwidth Limiter	Reduces upper 3 dB bandpass to a limit of 13 MHz to 24 MHz.
Vertical Signal Delay	At least 30 ns of the sweep is displayed before the triggering event is displayed at any SEC/DIV ≥10 ns/div. At 5 ns/div, at least 10 ns of the sweep is displayed before the triggering event.[a]
Chopped Mode Switching Rate	With displayed SEC/DIV in the 20 μs to 2 μs/div range, the switching rate is 2.5 MHz ±0.2%. Otherwise, the switching rate is 1 MHz ±0.2%. The display cycle rate equals the chop switching rate divided by the number of channels displayed. The chop switching rate is modulated slightly to minimize waveform breaks with repetitive signals.[a]
TRIGGERING	
Minimum P-P Signal Amplitude for Stable Triggering from Channel 1 or Channel 2 Source	
DC Coupled	0.35 division from dc to 50 MHz; increasing to 1.0 division at 300 MHz and 1.5 divisions at 500 MHz.
NOISE REJ Coupled	≤1.2 divisions from dc to 50 MHz; increasing to 3 divisions at 300 MHz and 4.5 divisions at 500 MHz.
AC Coupled	0.35 division from 60 Hz to 50 MHz; increasing to 1.0 division at 300 MHz and 1.5 divisions at 500 MHz. Attenuates signals below 60 Hz.
HF REJ Coupled	0.5 division from dc to 30 kHz.
LF REJ Coupled	0.5 division from 80 kHz to 50 MHz; increasing to 1.0 division at 300 MHz and 1.5 divisions at 500 MHz.
Minimum P-P Signal Amplitude for Stable Triggering from ADD Source	Add 0.5 division to CH 1 or CH 2 requirement at 300 MHz and 500 MHz.
Minimum P-P Signal Amplitude for Stable Triggering from CH 3 or CH 4 Source	0.5 × CH 1 or CH 2 requirement.
Minimum P-P Signal Amplitude for Stable Triggering from Composite, Multiple Channel Source, ALT Vertical Mode	Checked at 50 mV per division. Add 1 division to the single-channel source specification.

[a]Performance requirement not checked in manual.

Table 1-1 (cont)

Characteristics	Performance Requirements
Maximum P-P Signal Rejected by NOISE REJ COUPLING Signals Within the Vertical Bandwidth	
CH 1 or CH 2 SOURCE	≥0.4 division for VOLTS/DIV settings of 10 mV/div and higher. Maximum noise amplitude rejected is reduced at 2 mV/div and 5 mV/div.
CH 3 or CH 4 SOURCE	≥0.2 division.[a]
Jitter	
2467B	≤100 ps with 5 divisions of 400 MHz at 500 ps/division.
2465B	≤50 ps with 5 divisions of 400 MHz at 500 ps/division.
LEVEL Control Range	
CH 1 or CH 2 SOURCE	±18 × VOLTS/DIV setting.[a]
CH 3 or CH 4 SOURCE	±9 × VOLTS/DIV setting.[a]
LEVEL Readout Accuracy	For triggering signals with transition times greater than 20 ns.
CH 1 or CH 2 SOURCE +15°C to +35°C	Within ±[3% of reading + 3% of p-p signal + 0.2 division + 0.5 mV + (0.5 mV × probe attenuation factor)] with Vertical Input at 1 MΩ DC, CH 2 Source Not Inverted, and Trigger DC Coupled.
−15°C to +35°C and +35°C to +55°C	Add 1.5 mV × probe attenuation to +15°C to +35°C specification.[a]
50 Ω Input	Add ±1% to 1 MΩ input specification.[a]
CH 2 Inverted	Add ±1% of reading to non-inverted specification.[a]
NOISE REJ Coupled	Add ±0.6 division to DC Coupled specifications.[a]
CH 3 or CH 4 SOURCE	Within ±[3% of reading + 4% of p-p signal + 0.1 division + (0.5 mV × probe attenuation factor)] and Trigger DC Coupled.
NOISE REJ Coupled	Add ±0.3 division to the DC Coupled specification.[a]
AUTO LVL Mode Maximum Triggering Signal Period	
A SEC/DIV Setting	
<10 ms	At least 20 ms.[a]
10 ms to 50 ms	At least four times the A-SEC/DIV setting.[a]
>50 ms	At least 200 ms.[a]

[a]Performance requirement not checked in manual.

Table 1-1 (cont)

Characteristics	Performance Requirements
AUTO Mode Maximum Triggering Signal Period	
A-SEC/DIV Setting	
<10 ms	At least 80 ms.[a]
10 ms to 50 ms	At least 16 times the A-SEC/DIV setting.[a]
>50 ms	At least 800 ms.[a]
AUTO LVL Mode Trigger Acquisition Time	Eight to 100 times the AUTO LVL Mode maximum triggering signal period, depending on the triggering signal period and waveform.
Trigger Holdoff	
Minimum	
2467B	The greater of the A-SEC/DIV setting value or 1 μs, within +33% + 500 ns to −10%.[a]
2465B	The greater of the A-SEC/DIV setting value or 2 μs, within +33% to −10%, except 1 μs at 5 ns/div.[a]
Variable	Increases trigger holdoff time to 10 to 25 times the minimum holdoff.
SLOPE Selection	Conforms to trigger-source waveform or ac power-source waveform.
HORIZONTAL DEFLECTION SYSTEM	
A Sweep Time Base Range	500 ms/div to 5 ns/div in a 1-2-5 sequence of 25 steps. X10 MAG extends maximum sweep rate to 500 ps/div.
B Sweep Time Base Range	50 ms/div to 5 ns/div in a 1-2-5 sequence of 22 steps. X10 MAG extends maximum sweep rate to 500 ps/div.
Timing Accuracy	+15°C to +35°C, A Sweep, with SEC/DIV at 100 ms/div or faster.
Sweep Accuracy Unmagnified	±(0.7% of time interval + 0.6% of full scale).
Δt Accuracy With Cursors, Unmagnified	±(0.5% of time interval + 0.3% of full scale).
Δt Accuracy with Sweep Delay	±(0.3% of time interval + 0.1% of full scale + 200 ps).
Delay Accuracy, A Sweep Trigger to Start of B Sweep	±(0.3% of delay setting + 0.6% of full scale) +0 to −25 ns.
B-Sweep Accuracy and Δt Accuracy with Cursors on B Sweep	Add ±0.3% of time interval to A-Sweep specifications.

[a]Performance requirement not checked in manual.

Table 1-1 (cont)

Characteristics	Performance Requirements
X10 MAG Accuracy	Add ±0.5% of time interval to unmagnified Sweep and Δt Cursors specifications. Exclude the first 0.5 division after the sweep starts (the first 0.5% of the full 100 division sweep).
500 ms or 200 ms/div Timing Accuracy (A Sweep only)	Add ±0.5% of interval to specifications for A SEC/DIV at 100 ms or faster.
SEC/DIV VAR Timing Accuracy	Add 2% of time interval to sweep accuracy specifications when VAR is out of detent.
Timing Accuracy (−15°C to +15°C and +35°C to +55°C)	Add ±0.2% of time interval to all Δt and delay specifications. Add ±0.5% of interval to sweep accuracy specification.[a]
Δt Readout Resolution	Greater of either 10 ps or 0.025% of full scale.[a]
Δt Range	±10 times A-SEC/DIV setting with Cursors, ±9.95 times A-SEC/DIV setting with Sweep Delay.[a]
Sweep Delay Range	0 to 9.95 times the A SEC/DIV setting, from 500 ms to 10 ns. A-Sweep triggering event is observable on B Sweep with zero delay setting for A SEC/DIV settings 10 μs or faster.[a]
Delay Jitter	
2467B	Within 0.01% (one part or less in 10,000) of the maximum available delay, plus 100 ps.[a]
2465B	Within 0.004% (one part or less in 25,000) of the maximum available delay, plus 50 ps.[a]
Horizontal POSITION Range	Start of 1 ms per division sweep can be positioned from right of graticule center to at least 10 divisions left of graticule center. Some portion of 1 ms per division sweep is always visible with X10 MAG off.[a]
X-Y Operation	
X-Axis Deflection Factor Range, Variable, and Input Characteristics	Same as Channel 1.
Deflection Factor Accuracy	Same as Channel 1.[a]
X-Axis Bandwidth	Dc to 3 MHz.
Phase Difference Between X and Y with BW Limit Off	≤1° from dc to 1 MHz; ≤3° from 1 MHz to 2 MHz.
X-Axis Low-frequency Linearity	0.1 division or less compression or expansion of a two-division, center-screen signal when positioned within the graticule area.

[a]Performance requirement not checked in manual.

Table 1-1 (cont)

Characteristics	Performance Requirements
DISPLAY	
Cursor Position Range	
Delta Volts (ΔV)	At least the center 7.6 vertical divisions.
Delta Time (Δt)	At least the center 9.6 horizontal divisions.
Graticule	
Size	
2467B	68 mm X 85 mm.[a]
2465B	80 mm X 100 mm.[a]
Markings	8 major divisions vertically and 10 major divisions horizontally, with auxiliary markings.[a]
Trace Rotation Range	Adequate to align trace with the center horizontal graticule line.
Standard Phosphor	P31[a]
Visual Writing Rate	
2467B	≤4 divisions/ns. *NOTE* *Using the standard-accessory color filter, no more than 5 bright spots will be visible at maximum intensity and no bright-spot halo will be visible within the center 7 X 9 divisions. Additional bright spots may be visible after displaying a high-intensity trace. These added spots will extinguish when intensity is set to minimum.*
2465B	≥20 divisions/μs.
Photographic Writing Speed (2467B)	≥10 divisions/ns.
Display Intensity Limitation (2467B)	Control settings and trigger rate are monitored to limit the display intensity after a time of no control activity.[a]
Z-AXIS INPUT	
Sensitivity	
Dc to 2 MHz	Positive voltage decreases intensity; +2 V blanks a maximum intensity trace.
2 MHz to 20 MHz	+2 V modulates a normal intensity trace.[a]
Input Resistance	9 kΩ ±10%.[a]
Maximum Input Voltage ⚠	±25 V peak; 25 V p-p ac at 10 kHz or less.[a]

[a]**Performance requirement not checked in manual.**

Table 1-1 (cont)

Characteristics	Performance Requirements
SIGNAL OUTPUTS	
CALIBRATOR	With A SEC/DIV set to 1 ms.
Output Voltage and Current	0.4 V ±1% into a 1-MΩ load, 0.2 V ±1.5% into a 50-Ω load, or 8 mA ±1.5% into a short circuit.[a]
Repetition Period	Two times the A SEC/DIV setting for SEC/DIV from 100 ns to 100 ms.
Accuracy	±0.1%, during sweep time.
CH 2 SIGNAL OUT	
Output Voltage	20 mV/division ±10% into 1 MΩ, 10 mV/division ±10% into 50 Ω.
Offset	±20 mV into 1 MΩ, when dc balance has been performed within ±5°C of the operating temperature.
A GATE OUT and B GATE OUT	
Output Voltage	2.4 V to 5 V positive-going pulse, starting at 0 V to 400 mV.
Output Drive	Will supply 400 μA during HI state; will sink 2 mA during LO state.[a]
AC POWER SOURCE	
Source Voltage	
Nominal Ranges	
115 V	90 V to 132 V.
230 V	180 V to 250 V.
Source Frequency	48 Hz to 440 Hz.[a]
Fuse Rating	2 A, 250 V, AGC/3AG, Fast blow; or 1.6 A, 250 V, 5 × 20 mm Quick-acting.[a]
Maximum Power Consumption (fully optioned instrument)	120 watts (180 VA).[a]
Primary Circuit Dielectric Voltage Withstand Test	1500 V rms, 60 Hz for 10 seconds without breakdown.[a]
Primary Grounding	Type test to 0.1 Ω maximum. Routine test to check grounding continuity between chassis ground and protective earth ground.[a]

[a]Performance requirement not checked in manual.

Table 1-1 (cont)

Characteristics	Performance Requirements
PARAMETRIC MEASUREMENTS	
Period	
Accuracy	
+15°C to +35°C	0.9% + 0.5 ns + Jitter Error.
−15 to +15°C and +35°C to +55°C	Add 0.3%.
Minimum Period	≤ 2 ns.
Maximum Period	≥100 ms (MINFREQ=10Hz).
Minimum Signal Amplitude	≤ (60 mV + probe attenuation factor p-p). If DC coupling is used, the DC offset voltage must meet the following criteria: at a VOLTS/DIV setting which gives a p-p signal ≥ 4 divisions, the peak signal + offset must be ≤ 12 divisions.
Frequency	Calculated as 1/period.
Volts	
+Peak, −Peak, Peak-to-Peak, and Average	
Accuracy	
+15°C to +35°C	5% of reading + 5 mV + (0.5 mV * probe attenuation) + signal aberrations + 1 Least Significant Digit (LSD).
−15°C to +15°C and +35°C to +55°C	Add (1.5 mV * probe attenuation).
Minimum Width at Peak Amplitude	≤ 10 ns.
Maximum Sine Wave Frequency	
+15°C to +35°C	≥ 1 MHz.
−15°C to +15°C and +35°C to +55°C	Add 2%. Volts measurements depend on peak signal measurements. Noise on the input signal, even if at a low repetition rate that makes it difficult to see, will be detected and will affect the measurements.
Pulse Width (High or Low)	
Accuracy	
+15°C to +35°C	0.9% of reading + 1.0 ns + jitter error + 2 * offset error.
−15°C to +15°C and 35°C to +55°C	Add 0.3%.
Minimum Pulse Width	≤ 5 ns.
Minimum Repetition Rate	≤ 10 Hz (with MINFREQ = 10 Hz).

Table 1-1 (cont)

Characteristics	Performance Requirements
Duty Cycle	Calculated from Pulse Width and Period.
Rise Time, Fall Time, and Time Interval	
Accuracy	
+15°C to +35°C	5% of reading + 3.0 ns + jitter error + offset error.
Rise/Fall Time	Add 0.5 ns if measurement is made between CH1 and CH2.
Time Interval	0.5 % of reading + 5% of start event transition time + 5% of stop event transition time + 3.0 ns + jitter error + offset error. Rise and Fall time measurement is made at 20% and 80% points of transition and linearly extrapolated to the 10% and 90% points. Accuracy is relative to time interval as measured on screen using cursors. Measurement is made using peak-to-peak transition for measurement points in percent.
−15 to +15°C and +35°C to +55°C	Add 2%.
Minimum Time	≤ 5 ns.
Minimum Repetition Rate	≤ 10 Hz (with MINFREQ = 10 Hz).
Jitter Error	Noise on the input signal causes jitter which introduces errors in the measurements. The amount of jitter depends on the noise amplitude and the slew rate of the input signals. The amount of jitter can be calculated as: $\text{jitter} = \frac{\text{input noise amplitude (peak)}}{\text{input slew rate in div/sec}}$ Input slew rate should be measured at 2 Volts/div.settings more sensitive than the setting at the end of the measurements or at 5 mV/div, whichever is less sensitive. The slew rate must be measured at the same points at which the measurement will be taken. The points for the various measurements are:

Measurement Points

Measurement	First Measurement point	Second Measurement point
Frequency	50% amplitude	50% amplitude
Width	50% amplitude	50% amplitude
Rise, Fall Time	10% amplitude	90% amplitude
Time interval	Specified by Time Interval Configuration	Specified by Time Interval Configuration

Table 1-1 (cont)

Characteristics	Performance Requirements
	The algorithms used for the measurements result in the following equation for the total jitter error that must be applied to the accuracy specifications. Jitter Error = 2 * first point jitter + 2 * second point jitter.
Offset Error	Offset error is introduced when the trigger level is not set exactly at the expected points. This misplacement of the trigger level applied to any non-infinite slew rate produces a timing error. The magnitude of the error is given by: $\text{Offset Error} = \frac{\text{offset}}{\text{input slew rate}}$ Frequency measurements do not suffer from offset errors since measurements are made with the same trigger level and slope, so no offset is introduced. All other timing measurements suffer from offset errors. The slew rates used to calculate offset errors must be measured at the first and second measurement points given in the Measurement Points table. Offset error is calculated as: $\text{Offset Error} = \frac{0.2\text{ div}}{\text{First Point slew rate}} + \frac{0.2\text{ div}}{\text{Second Point slew rate}}$ If a time interval measurement is made using Volts mode, the offset at each measurement point is: 0.2 div + 5% of measurement point voltage converted to divisions.

Table 1-2
Option 06 (C/T/T) Electrical Characteristics

Characteristics	Performance Requirements
SIGNAL INPUT	
	With DC Coupling of A Trigger and B Trigger.
Maximum Input Frequency for Count and Delay by Events	≥150 MHz.
Minimum Width of High or Low State of Input Signal for Count and Delay by Events	≤3.3 ns.
Sensitivity	For Count, Delay by Events, and Logic Trigger Functions Excluding Word Recognizer.
Dc to 50 MHz (0.5 Hz to 50 MHz for Frequency and Period)	
CH 1 and CH 2	1.5 divisions.
CH 3 and CH 4	0.75 division.
50 MHz to 150 MHz	
CH 1 and CH 2	4.0 divisions.
CH 3 and CH 4	2.0 divisions.
FREQUENCY	
Ranges	**RANGE** / **LSD**[a]
	1 Hz / 100 nHz
	10 Hz / 1 μHz
	100 Hz / 10 μHz
	1 kHz / 100 μHz
	10 kHz / 1 mHz
	100 kHz / 10 mHz
	1 MHz / 100 mHz
	10 MHz / 1 Hz
	100 MHz / 10 Hz
	150 MHz / 100 Hz
Automatic Ranging	Upranges at 100% of full scale; downranges at 9% of full scale. Downrange occurs at 90 MHz on 150 MHz range.
	Full scale corresponds to the value given in the Range column. The maximum displayed value for any range is the Range value minus the LSD value.

[a]Performance requirement not checked in manual.

Table 1-2 (cont)

Characteristics	Performance Requirements
Accuracy	±[Resolution + (Frequency × TBE)] Hz.
Time Base Error (TBE)	10 ppm with less than 5 ppm per year drift.
Resolution	$\frac{1.4 \times \text{Frequency}^2 \times \text{TJE}}{\text{N}}$ + LSD.
Display Update Rate	Twice per second or twice the period of the input signal, whichever is slower.
PERIOD	
Ranges	**RANGE** / **LSD**[a] 10 ns / 1 fs 100 ns / 10 fs 1 μs / 100 fs 10 μs / 1 ps 100 μs / 10 ps 1 ms / 100 ps 10 ms / 1 ns 100 ms / 10 ns 1 s / 100 ns 2 s / 1 μs
Minimum Period	≤6.7 ns.
Automatic Ranging	Upranges at 100% of full scale; downranges at 9% of full scale. Full scale corresponds to the value given in the Range column. The maximum displayed value for any range is the Range value minus the LSD value.
Accuracy	± [Resolution + (TBE × Period)].
Resolution	±[LSD + (1.4 × TJE)/N].
Display Update Rate	Twice per second or twice the period of the input signal, whichever is slower.

[a]**Performance requirement not checked in manual.**

Table 1-2 (cont)

Characteristics	Performance Requirements
TOTALIZE	
Maximum Count	9999999.
Display Update Rate	Twice per second or once per event, whichever is slower.
DELAY BY EVENTS	
Maximum Event Count	4194303.
Minimum Time from Start Signal to Any Delay Event	4 ns.
LOGIC TRIGGER	
Minimum Function-True Time	4 ns.
Minimum Function-False Time	4 ns.
ADDED DELAY TIME CHARACTERISTICS WITH C/T/T	
Run After Delay	
Accuracy	LSD[b] + [0.0012 × (A SEC/DIV)] + [0.03 × (B Time/Div)[c]] + A Trigger Level Error + 50 ns. When the A Sweep is triggered by the Word Recognizer in synchronous mode, add 100 ns for probe delay; in asynchronous mode, add 200 ns for probe delay.
Triggerable After Delay	
Accuracy	For intervals within 70 ns to 10 times the A-SEC/DIV Setting.
	LSD[b] + [10 ppm × (measured interval)] + TJE + A-Trigger Level Error + B-Trigger Level Error + 0.5 ns. If the A and B Sweeps are triggered from different channels, add 0.5 ns for channel-to-channel mismatch. When the A Sweep is triggered by the Word Recognizer in synchronous mode, add 100 ns for probe delay; in asynchronous mode, add 200 ns for probe delay.
Minimum Measurable Delay Time	≤70 ns.
Display Update Rate	In Auto Resolution, twice per second or once for every sweep, whichever is slower. In 1 ns, 100 ps, and 10 ps resolution modes, the update rate depends on the A SEC/DIV setting and the trigger repetition rate.

[b]See Tables 1-3 and 1-4.

[c]B Time/Div includes SEC/DIV, X10 MAG, and VAR.

[d]This term assumes the trigger points are between the 10% and 90% points of the waveforms. Fall time is expressed as a negative risetime.

Table 1-2 (cont)

Characteristics	Performance Requirements
ADDED DELTA-DELAY-TIME CHARACTERISTICS WITH C/T/T	
Run After Delay	
Accuracy	LSD[b] + [0.0008 × (A SEC/DIV)] + [0.01 × (B Time/Div)[c]] + 83 ps. When the A Sweep is triggered by the Word Recognizer in synchronous mode, add 1 ns for probe jitter; in asynchronous mode, add 20 ns for probe jitter.
Triggerable After Delay	
Accuracy	Both delays are within 70 ns to 10 times the A-SEC/DIV setting.
Superimposed Delta Time	LSD[b] + [0.01 × (B Time/Div)[c]] + [10 ppm × (A SEC/DIV)] + [10 ppm × (measured interval)] + 50 ps + TJE. If CH 3 or CH 4 is one channel of a two-channel measurement, add 0.5 ns for channel-to-channel delay mismatch.
Nonsuperimposed Delta Time	LSD[b] + $\lvert t_{r_{REF}} - t_{r_{DELT}} \rvert$[d] + TJE + [(0.0005 div) × ($1/SR_{REF}$ + $1/SR_{DELT}$)] + [10 ppm × (A SEC/DIV)] + [10 ppm × (measured interval)] + 50 ps. If A and B sweeps are triggered from different channels, add 0.5 ns for channel-to-channel mismatch + [0.5 div × ($1/SR_{REF}$ + $1/SR_{DELT}$)] for trigger offset.
Display Update Rate	In Auto Resolution, twice per second or once for every four sweeps, whichever is slower. In 1 ns, 100 ps, and 10 ps resolution modes, the update rate depends on the A SEC/DIV setting and the trigger repetition rate.

[b]See Tables 1-3 and 1-4.

[c]B Time/Div includes SEC/DIV, X10 MAG, and VAR.

[d]*This term assumes the trigger points are between the 10% and 90% points of the waveforms. Fall time is expressed as a negative risetime.*

Table 1-2 (cont)

Characteristics	Performance Requirements
DEFINITIONS	

A Trigger Level Error = (A Trigger Level Readout Error)/SR_A.

B Trigger Level Error = (B Trigger Level Readout Error)/SR_B.

$t_{r_{REF}}$ = rise time, reference trigger signal.

$t_{r_{DELT}}$ = rise time, delta trigger signal.

SR_A = slew rate at trigger point, A Sweep trigger signal in div/sec.

SR_B = slew rate at trigger point, B Sweep trigger signal in div/sec.

SR_{REF} = slew rate at trigger point, reference trigger signal in div/sec.

SR_{DELT} = slew rate at trigger point, delta trigger signal in div/sec.

TJE = trigger jitter error.

For delay or delta time, disregarding noise in the signal, this term contributes<1 LSD if the slew rate is greater than 0.03 vertical div/ns or if the slew rate is greater than 30000 vertical div/horizontal div.

Trigger Jitter = [(Reference Trigger Signal Jitter)^2 + (Delta TriggerSignal Jitter)^2 + (A Sweep Trigger Signal Jitter)^2]$^{1/2}$.

Reference Trigger Signal Jitter = $(e_{n_S} + e_{n_{REF}})/SR_{REF}$.

= 0 for Frequency mode.

e_{n_S} = scope noise in div.

= 0.05 div for HF REJ trigger coupling.

= 0.1 div for DC trigger coupling, 5 mV to 5 V sensitivity.

= 0.15 div for DC trigger coupling, 2 mV sensitivity.

$e_{n_{REF}}$ = reference signal rms noise in div.

Delta Trigger Signal Jitter = $(e_{n_S} + e_{n_{DELT}})/SR_{DELT}$.

= 0 for Frequency or Delay mode.

$e_{n_{DELT}}$ = delta signal rms noise in div.

A Trigger Signal Sweep Jitter = $(e_{n_S} + e_{n_A})/SR_A$.

e_{n_A} = A sweep trigger signal rms noise in div.

When the Word Recognizer supplies a trigger in synchronous mode, the trigger jitter of the associated trigger signal is <1 ns; in asynchronous mode, the associated trigger signal jitter is <20 ns.

N = number of averages during measurement interval.

= see Table 1-3 for Delay or Delta Time.

= (measured frequency) × (measurement interval) for Frequency or Period.

Measurement Interval = 0.5 s or two periods of measured signal, whichever is greater.

Table 1-3
Resolution Selections

A SEC/DIV	Selection	Least Digit	N for Average
10 ns to 500 ms	AUTO	See Table 1-4	See Table 1-4
10 ns to 5 μs	10 ps	10 ps	$> 10^6$
	100 ps	100 ps	$> 10^4$
	1 ns	1 ns	> 100
10 μs to 50 μs	10 ps or 100 ps	100 ps	$> 10^4$
	1 ns	1 ns	> 100
100 μs to 500 μs	10 ps to 1 ns	1 ns	> 100
1 ms to 5 ms	Any	10 ns	> 1
10 ms to 50 ms	Any	100 ns	> 1
100 ms to 500 ms	Any	1 μs	> 1

Table 1-4
Resolution Selections

A SEC/DIV	Trigger Rate	Least Digit	N for Average
10 ns to 2 μs	> 20 kHz	100 ps	$> 10^4$
10 ns to 2 μs	200 Hz to 20 kHz	1 ns	> 100
5 μs to 200 μs	> 200 Hz	1 ns	> 100
10 ns to 200 μs	< 200 Hz	10 ns	> 1
500 μs to 5 ms	Any	10 ns	> 1
10 ms to 50 ms	Any	100 ns	> 1
100 ms to 500 ms	Any	1 μs	> 1

Table 1-5
Option 09 (WR) Electrical Characteristics

Characteristics	Performance Requirements
SYNCHRONOUS MODE	
Data Setup Time D_0—D_{15} and Q	25 ns.
Data Hold Time D_0—D_{15} and Q	0 ns.
Minimum Clock Pulse Width High	20 ns.
Low	20 ns.
Minimum Clock Period	50 ns.
Delay from Selected Clock Edge to Word Out from C/T/T	≤55 ns.
ASYNCHRONOUS MODE	
Maximum Trigger Frequency	10 MHz.
Minimum Coincidence Between Data Inputs (D_0—D_{15} & Q) Resulting in a Trigger	<85 ns.
Maximum Coincidence Between Data Inputs (D_0—D_{15} & Q) Without Producing a Trigger	>20 ns.
Delay from Input Word Coincidence to Word Out	≤140 ns.
INPUTS AND OUTPUTS	
Input Voltages Minimum Input Voltage ⚠	−0.5 V.
Maximum Input Voltage ⚠	5.5 V.
Maximum Input Low Voltage	0.6 V.
Minimum Input High Voltage	2.0 V.
WORD RECOG OUT High	> 2.5 V LSTTL output.
Low	< 0.5 V LSTTL output.
Input High Current	≤20 μA.
Input Low Current	≥ −0.6 mA source.

Table 1-6
2465B Mechanical Characteristics

Characteristics	Description
Weight	
With Accessories and Pouch	10.2 kg (22.4 lb).
With Option 05, 06 and 09, or 10	12.0 kg (26.44 lb).
Without Accessories and Pouch	9.3 kg (20.5 lb).
Domestic Shipping Weight	12.8 kg (28.2 lb).
With Option 05, 06 and 09, or 10	17.6 kg (38.8 lb).
Height	
Without Accessories Pouch	
With or without Options 05, 06 and 09, and 10	160 mm (6.29 in).
With Feet and Accessories Pouch	
With or without Options 05, 06 and 09, and 10	202 mm ± 25.4 mm (7.94 in ± 1.0 in).
Width (with handle)	338 mm (13.31 in).
Depth	
With Front Panel Cover	434 mm (17.1 in).
With Handle Extended	508 mm (20.0 in).
Cooling	Forced-air circulation.
Finish	Tek Blue vinyl clad material on aluminum cabinet.
Construction	Aluminum-alloy chassis (sheet metal). Plastic-laminate front panel. Glass-laminate circuit boards.

Table 1-7
2467B Mechanical Characteristics

Characteristics	Description
Weight	
With Accessories and Pouch	10.9 kg (24.0 lb).
With Option 05, 06 and 09, or 10	12.0 kg (26.44 lb).
Without Accessories and Pouch	9.7 kg (21.3 lb).
Domestic Shipping Weight	14.6 kg (32.1 lb).
With Option 05, 06 and 09, or 10	19.4 kg (42.7 lb).
Height	
Without Accessories Pouch	
With or without Options 05, 06 and 09, and 10	160 mm (6.29 in).
With Feet and Accessories Pouch	
With or without Options 05, 06 and 09, and 10	202 mm ± 25.4 mm (7.94 in ± 1.0 in).
Width (with handle)	338 mm (13.31 in).
Depth	
With Front Panel Cover	472 mm (18.6 in).
With Handle Extended	533 mm (21.0 in).
Cooling	Forced-air circulation.
Finish	Tek Blue vinyl clad material on aluminum cabinet.
Construction	Aluminum-alloy chassis (sheet metal). Plastic-laminate front panel. Glass-laminate circuit boards.

Table 1-8
Environmental Requirements

Characteristics	Performance Requirements
	Environmmental requirements qualify the electrical and mechanical specifications. When not rack mounted, the instrument meets the environmental requirements of MIL-T-28800C for Type III, Class 3, Style C equipment, with the humidity and temperature requirements defined in paragraphs 3.9.2.2, 3.9.2.3, and 3.9.2.4. Rack mounting changes the temperature, vibration, and shock capabilities. The rack mounted instruments meet or exceed the requirements of MIL-T-28800C with respect to Type III, Class 5, Style C equipment with the rack-mounting rear-support kit installed. Rack mounted instruments will be capable of meeting or exceeding the requirements of Tektronix Standard 062-2853-00, class 5.
Temperature	
Operating	−15°C to +55°C.
	For a rack mounted instrument, ambient temperature should be measured at the instrument's air inlet. Fan exhaust temperature should not exceed +65°C.
Nonoperating (Storage)	−62°C to +85°C.
Altitude	
Operating	To 15,000 feet. Maximum operating temperature decreases 1°C for each 1000 feet above 5000 feet.
Nonoperating (Storage)	To 50,000 feet.
Humidity	
Operating and Storage	Stored at 95% relative humidity for five cycles (120 hours) from 30°C to 60°C, with operational performance checks at 30°C and 55°C.
Vibration (operating)	
Not Rack Mounted	15 minutes along each of three axes at a total displacement of 0.025 inch p-p (4 g at 55 Hz), with frequency varied from 10 Hz to 55 Hz in one minute sweeps. Hold 10 minutes at each major resonance or, if none exists, hold 10 minutes at 55 Hz (75 minutes total test time).
Rack Mounted	Change displacement to 0.015 inch p-p (2.3 g at 55 Hz).
Shock (operating and nonoperating)	
Not Rack Mounted	50 g, half sine, 11 ms duration, three shocks on each face, for a total of 18 shocks.
Rack Mounted	30 g.
Transit Drop (not in shipping package)	8-inch drop on each corner and each face (MIL-T-28800C, para. 4.5.5.4.3).
Bench Handling (cabinet on and cabinet off)	MIL-STD-810C, Method 516.2, Procedure V (MIL-T-28800C, para. 4.5.5.4.3).

Table 1-8 (cont)

Characteristics	Performance Requirements
Topple (operating with cabinet installed)	Set on rear feet and allow to topple over onto each of four adjacent faces (Tektronix Standard 062-2858-00).
Packaged Transportation Drop	Meets the limits of the National Safe Transit Assn., test procedure 1A-B-2; 10 drops of 36 inches (Tektronix Standard 062-2858-00).
Packaged Transportation (Vibration)	Meets the limits of the National Safe Transit Assn., test procedure 1A-B-1; excursion of 1 inch p-p at 4.63 Hz (1.1 g) for 30 minutes (Tektronix Standard 062-2858-00).
EMI (Electro-magnetic Interference)	Meets MIL-T-28800C; MIL-STD-461B, part 4 (CE-03 and CS-02), part 5 (CS-06), and part 7 (CS-01, RE-02, and RS-03) — limited to 1 GHz; VDE 0871, Category B; Part 15 of FCC Rules and Regulations, Subpart J, Class A; and Tektronix Standard 062-2866-00.
Electrostatic Discharge Susceptibility	Meets Tektronix Standard 062-2862-00. The instrument will not change control states with discharges of less than 10 kV.
X-Ray Radiation	Meets requirements of Tektronix Standard 062-1860-00.

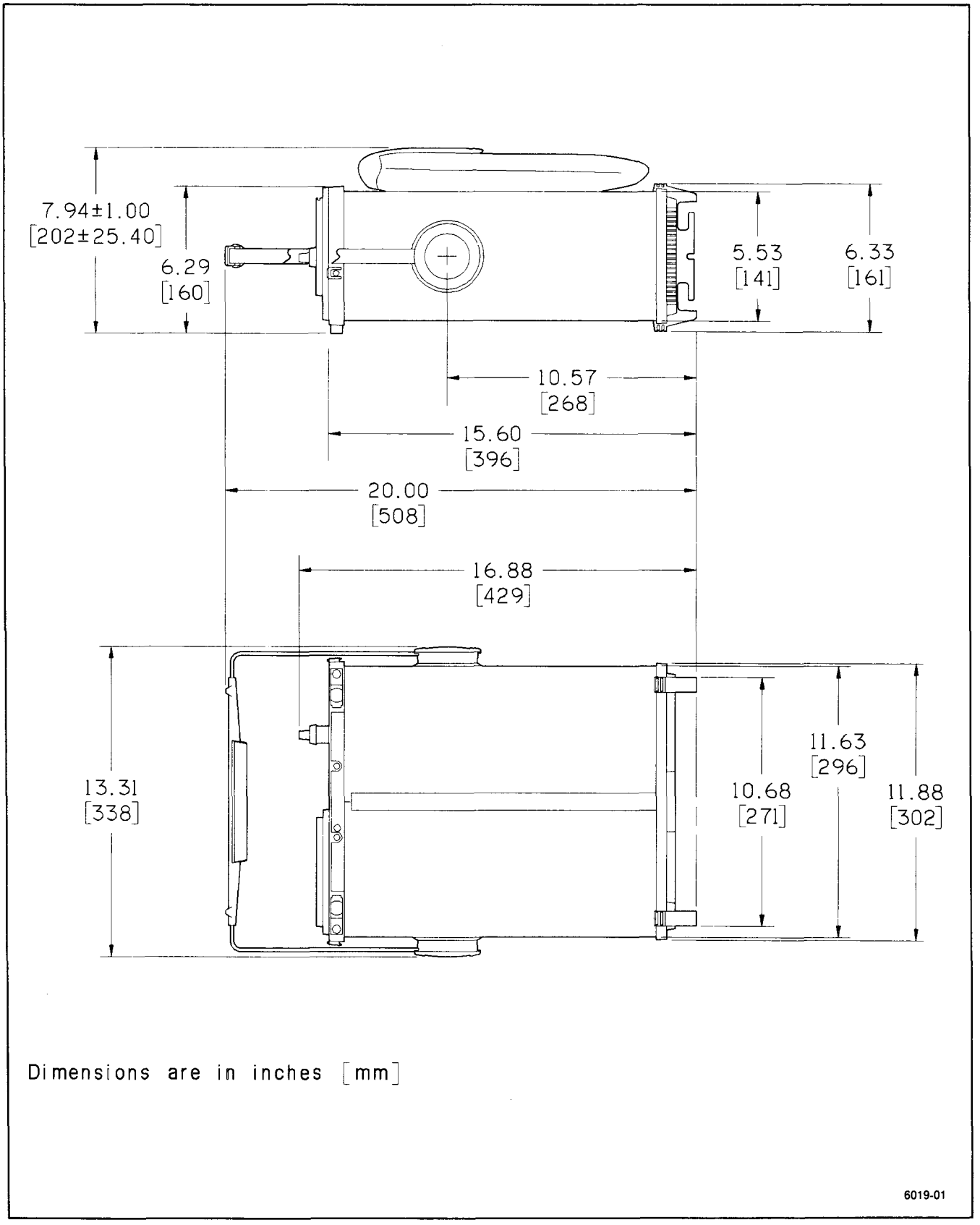

Figure 1-1. 2465B Dimensional drawing.

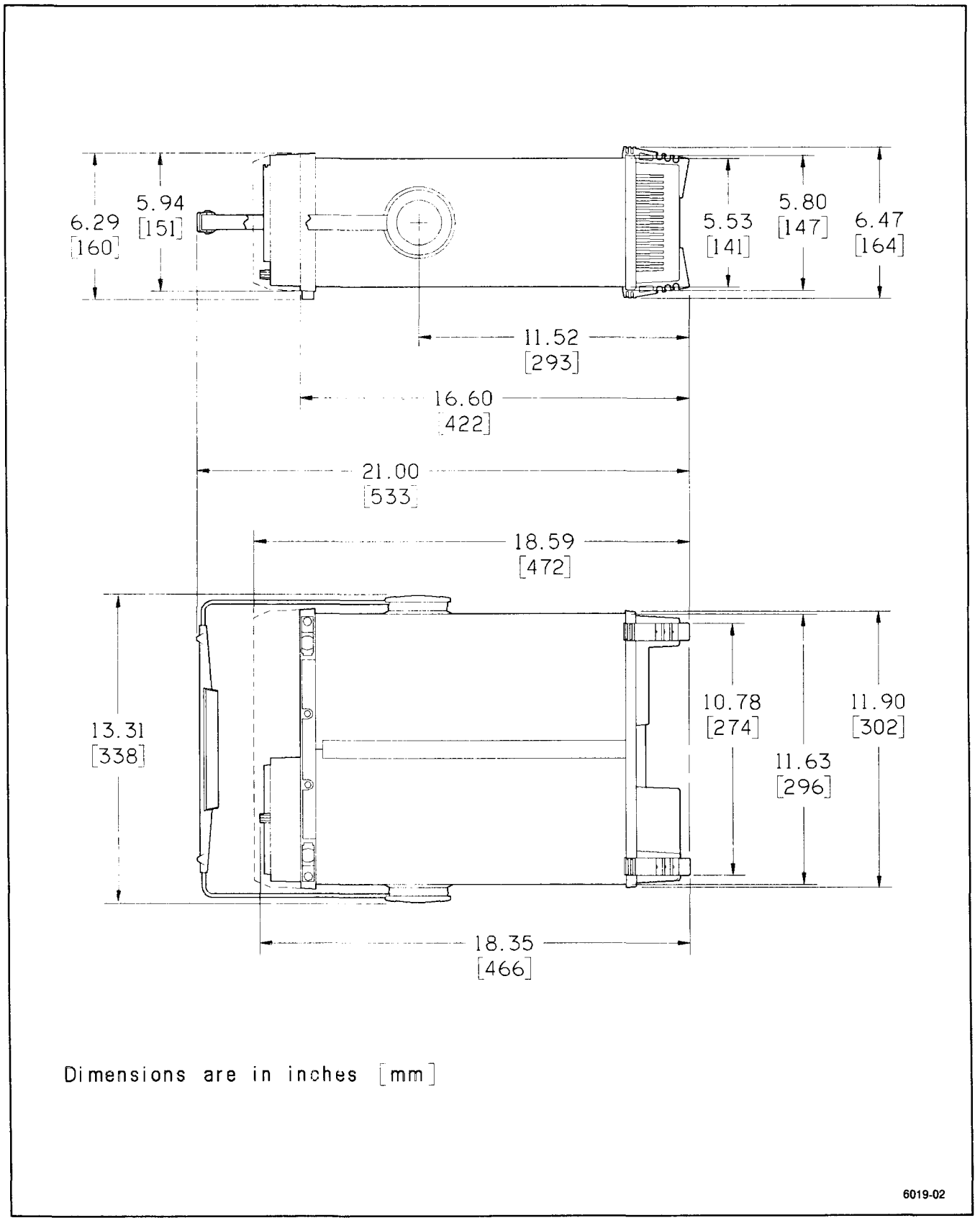

Figure 1-2. 2467B Dimensional drawing.

OPERATING INFORMATION

SAFETY

Before connecting the oscilloscope to a power source, read entirely both this section and the Safety Summary at the front of this manual. Be sure you have the training required to safely connect the instrument inputs to the signals you will be measuring. Refer to the Safety Summary for power source, grounding, and other safety considerations pertaining to the use of the instrument.

CAUTION

This instrument may be damaged if operated with the LINE VOLTAGE SELECTOR switch set for the wrong applied ac input-source voltage or if the wrong line fuse is installed.

LINE VOLTAGE SELECTION

The oscilloscope operates from either a 115-V or a 230-V nominal ac power-line with any frequency from 48 Hz to 440 Hz. Before connecting the power cord to a power source, verify that the LINE VOLTAGE SELECTOR switch, located on the rear panel (see Figure 2-1), is set correctly (see Table 1-1) and that the line fuse is correct. To convert the instrument for operation on the other line-voltage range, move the LINE VOLTAGE SELECTOR switch to the correct nominal ac source-voltage setting. The detachable power cord may have to be replaced to match the particular power source.

LINE FUSE

To verify the instrument power-input fuse rating, do the following steps:

1. Press in the fuse-holder cap and release it with a slight counterclockwise rotation. Pull the cap (with the attached fuse inside) out of the fuse holder.
2. Verify that the fuse is of the type listed on the back of the instrument. Then install the proper fuse and reinstall the proper fuse-holder cap. The two types of fuses listed are not directly interchangeable; they require different types of fuse caps. Included in the accessory pouch is a 5x20 mm fuse holder cap for use with 1.6 A, 250 V, 5x20 mm (IEC 127) fuses.

POWER CORD

This instrument has a detachable, three-wire power cord with a three-contact plug for connection to both the power source and protective ground. The power cord is secured to the rear panel by a cord-set-securing clamp. The protective-ground contact on the plug connects through the power-cord to the external metal parts of the instrument. For electrical-shock protection, insert this plug into a power-source outlet that has a properly grounded protective-ground contact.

Instruments are shipped with the required power cord as ordered by the customer. Available power-cord information is presented in Table 2-1, and part numbers are listed in "Options and Accessories" (Section 7). Contact your Tektronix representative or local Tektronix Field Office for additional power-cord information.

INSTRUMENT COOLING

To prevent instrument damage from internally generated heat, adequate air flow must be maintained. Before turning on the power, verify that the spaces around the air-intake holes on the bottom of the cabinet and the fan-exhaust holes in the rear panel are free of any obstruction to airflow.

OPERATING INFORMATION

All operating information pertaining to the use of these

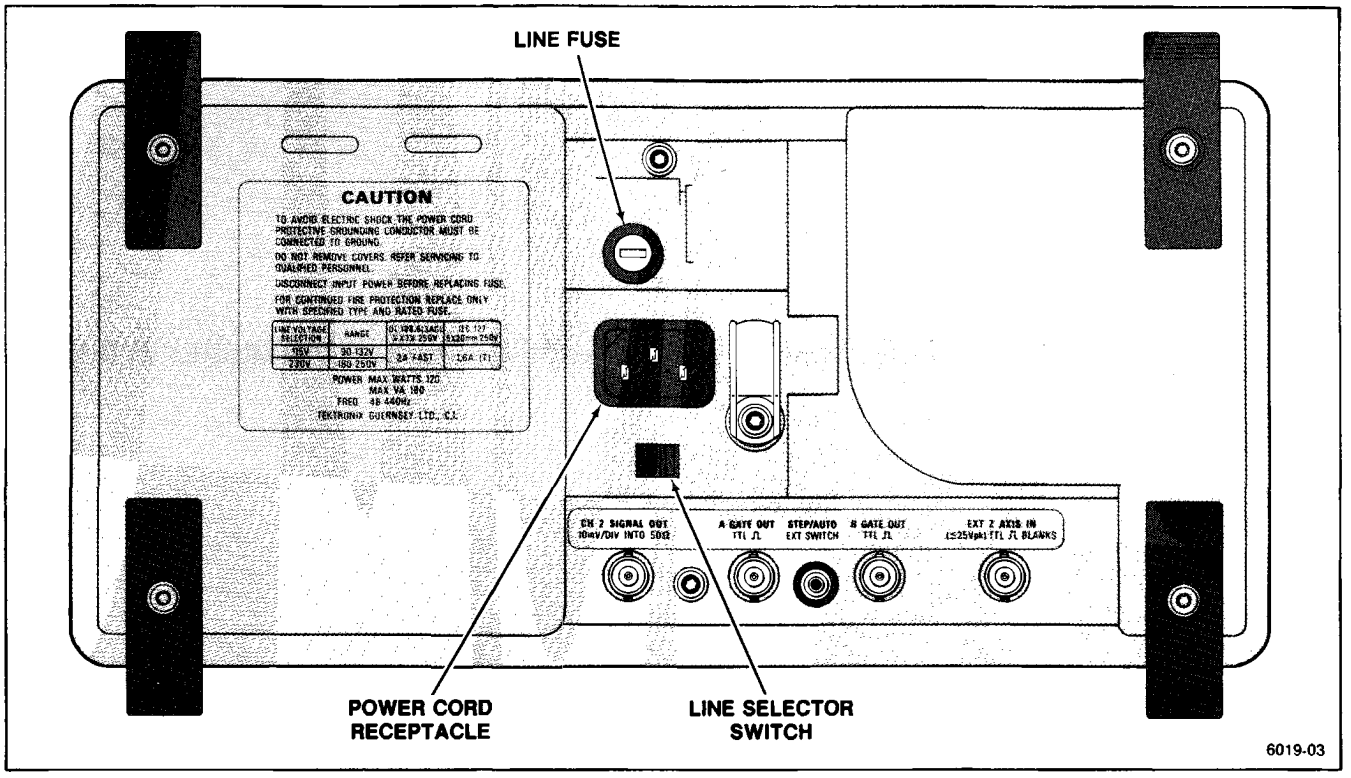

Figure 2-1. Line selector switch, line fuse, and detachable power cord.

instruments is found in the respective instrument Operators Manual.

START-UP

The oscilloscope automatically performs a set of diagnostic tests each time the instrument is turned on. These tests warn the user of any available indication that the instrument may not be fully functional. The tests run for several seconds after power is applied. If no faults are encountered, the instrument operates normally. A failure of any of the power-up tests will be indicated by either a flashing TRIG'D indicator on the instrument front panel or a bottom-line readout on the CRT in the form: **TEST XX FAIL YY** (where XX is the test number and YY is the failure code of the failed test).

If a failure of any power-up test occurs, the instrument may still be usable for some applications. To operate the instrument after a power-up test failure, press the A/B TRIG button. Even if the instrument then functions for your particular measurement requirement, it should be repaired by a qualified service technician at the earliest convenience. Additional information on the power-up tests and troubleshooting may be found in the "Maintenance" section of this manual. Consult your service department, your local Tektronix Service Center, or nearest Tektronix representative if additional assistance is needed.

REPACKAGING FOR SHIPMENT

If this instrument is to be shipped by commercial transportation, it should be packaged in the original manner. The carton and packaging material in which your instrument was shipped to you should be retained for this purpose.

If the original packaging is unfit for use or is not available, repackage the instrument as follows:

1. Obtain a corrugated cardboard shipping carton having inside dimensions at least six inches greater than the instrument dimensions and having a carton test strength of at least 275 pounds.

2. If the instrument is to be shipped to a Tektronix Service Center for service or repair, attach a tag to the instrument showing the following: owner of the instrument (with address), the name of a person at your firm who can be contacted, complete instrument type and serial number, and a description of the service required.

3. Wrap the instrument with polyethylene sheeting or equivalent to protect the outside finish and prevent entry of packing materials into the instrument.

4. Cushion the instrument on all sides by tightly packing dunnage or urethane foam between the carton and the instrument, allowing three inches on each side.

5. Seal the carton with shipping tape or with an industrial stapler.

6. Mark the address of the Tektronix Service Center and your return address on the carton in one or more prominent locations.

Table 2-1
Power Cord and Voltage Data

Plug Configuration	Option	Power Cord/ Plug Type	Line Voltage Selector	Reference Standards[b]
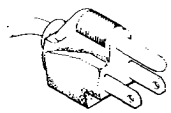	U.S. Std.	U.S. 120V	115V	ANSI C73.11 NEMA 5-15-P IEC 83 UL 198.6
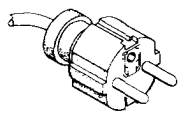	A1	EURO 220V	230V	CEE(7), II, IV, VII IEC 83 IEC 127
	A2	UK[a] 240V	230V	BS 1363 IEC 83 IEC 127
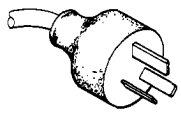	A3	Australian 240V	230V	AS C112 IEC 127
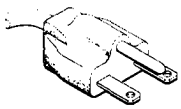	A4	North American 240V	230V	ANSI C73.20 NEMA 6-15-P IEC 83 UL 198.6
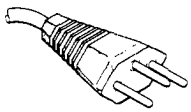	A5	Switzerland 220V	230V	SEV IEC 127

[a]A 6A, type C fuse is also installed inside the plug of the Option A2 power cord.

[b]Reference Standards Abbreviations:

ANSI—American National Standards Institute
AS—Standards Association of Australia
BS—British Standards Institution
CEE—International Commission on Rules for the Approval of Electrical Equipment
IEC—International Electrotechnical Commission
NEMA—National Electrical Manufacturer's Association
SEV—Schweizervischer Elektrotechnischer Verein
UL—Underwriters Laboratories Inc.

THEORY OF OPERATION (SN B050000 & ABOVE)

INTRODUCTION

SECTION ORGANIZATION

This section contains a functional description of the instrument circuitry. The discussion begins with an overview of the instrument functions and continues with detailed explanations of each major circuit. Reference is made to supporting schematic and block diagrams which will facilitate understanding of the text. These diagrams show interconnections between parts of the circuitry, identify circuit components, list specific component values, and indicate interrelationships with front-panel controls.

The detailed block diagram and the schematic diagrams are located in the tabbed "Diagrams" section at the rear of this manual, while smaller functional diagrams are contained within this section near their respective text. The particular schematic diagram associated with each circuit description is identified in the text, and the diagram number is shown (enclosed within a diamond symbol) on the tab of the appropriate foldout page. For optimum understanding of the circuit being described, refer to both the applicable schematic diagram and the functional block diagram.

HYBRID AND INTEGRATED CIRCUIT DESCRIPTIONS

Digital Logic Conventions

Digital logic circuits perform many functions within this instrument. The operation of these circuits is represented by specific logic symbology and terminology. Most logic-function descriptions contained in this manual use the positive-logic convention. Positive logic is a system of notation whereby the more positive of two levels is the TRUE (or 1) state; the more negative level is the FALSE (or 0) state. In the logic descriptions, the TRUE state is referred to as HI, and the FALSE state is referred to as LO. The specific voltages which constitute a HI or a LO state vary between individual devices. For specific device characteristics, refer to the manufacturer's data book.

Hybrids

Some of the circuits in this instrument are implemented in hybrid devices. The hybrids are specialized electronic devices combining thick-film and semiconductor technologies. Passive, thick-film components and active, semiconductor components are interconnected to form the circuit on a ceramic carrier. The end result is a relatively small "building block" with enhanced performance characteristics, all in one package. Hybrid circuits are shown on schematics simply as blocks with inputs and outputs. Information about hybrid functioning is contained in the related portion of the Detailed Circuit Description.

Linear Devices

The operation of individual linear integrated circuit devices is described in this section using waveforms or other graphic techniques to illustrate their operation.

BLOCK DIAGRAM

The following discussion is provided to aid in understanding the overall operation of the instrument circuitry before the individual circuits are discussed in detail. A simplified block diagram of the instrument, showing basic interconnections, is shown in Figure 3-1. The diamond-enclosed numbers in each block refer to the schematic diagram(s) at the rear of this manual in which the related circuitry is located.

BLOCK DESCRIPTION

The Low Voltage Power Supply is a high-efficiency, switching supply with active output regulation that transforms the ac source voltage to the various dc voltages required by the instrument. The High Voltage Power Supply circuit develops the high accelerating potentials required by the crt, using voltage multiplication techniques, and the DC Restorer provides interfacing for the low-potential intensity signals from the Z-Axis Amplifier to the crt control grid.

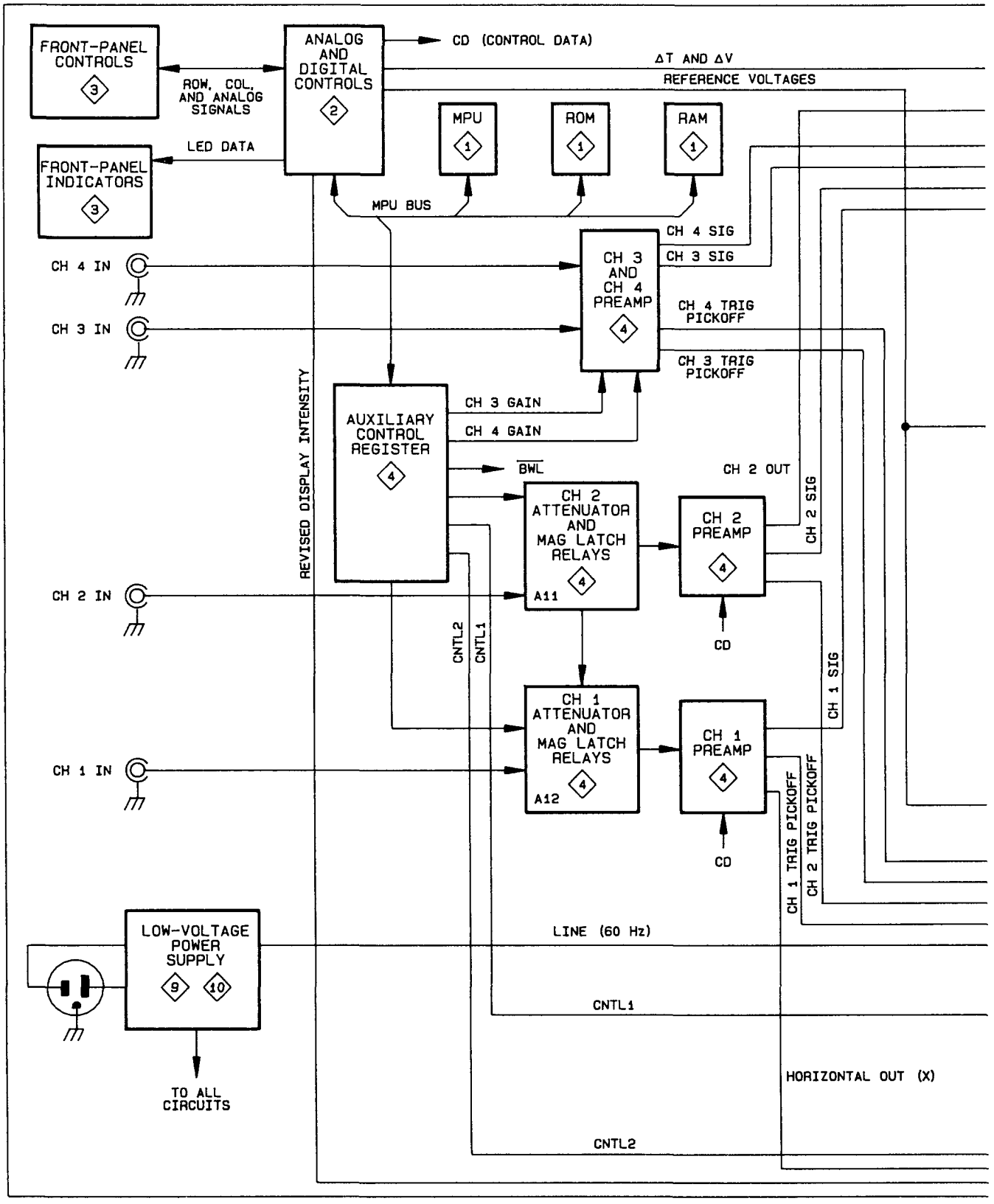

Figure 3-1. Instrument block diagram.

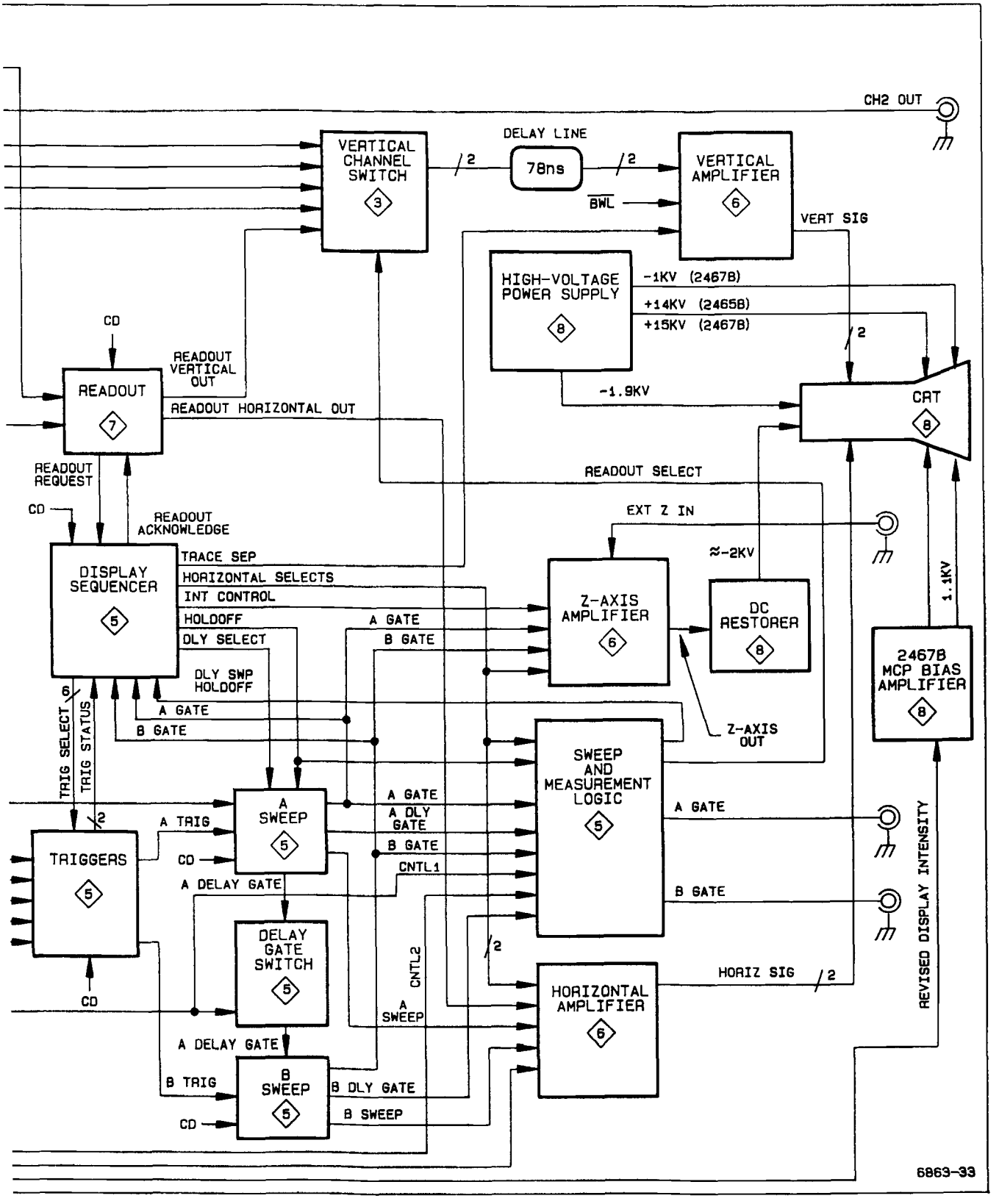

Figure 3-1. Instrument block diagram (cont).

Most of the activities of the instrument are directed by a microprocessor. The microprocessor, under firmware control (firmware is the programmed instructions contained in read-only memory that tells the processor how to operate), monitors instrument functions and sets up the operating modes according to the instructions received.

Various types of data read to and from the Microprocessor (program instructions, constants, control data, etc.) are all transferred over a group of eight bidirectional signal lines called the Data Bus. The Data Bus is dedicated solely to microprocessor-related data transfer.

Another group of signal lines, called the Address Bus, are responsible for selecting or "addressing" the memory location or device that the Microprocessor wants to communicate with. Typically, depending on the instruction being executed, the processor places an address on the Address Bus to identify the location the Microprocessor must communicate with. This address, along with some enabling logic, opens up an appropriate data path between the processor and the device or memory location via the Data Bus; and data is either read from or written to that location by the processor.

While executing the control program, the Microprocessor retrieves previously stored calibration constants and front-panel settings and, as necessary places program-generated data in temporary storage for later use. The battery backed up RAM provides these storage functions.

When power is applied to the instrument, a brief initialization sequence is performed, and then the processor begins scanning the front-panel controls. The switch settings detected and the retrieved front-panel data from the battery backed up RAM causes the processor to set various control registers and control voltages within the instrument that define the operating mode of the instrument. These register settings and voltage levels control the vertical channel selection and deflection factors, the sweep rate, the triggering parameters, the readout activity, and sequencing of the display. Loading the control data into the various registers throughout the instrument is done using a common serial data line (CD). Individual control clock signals (CC) determine which register is loaded from the common data line.

Coordination of the vertical, horizontal, and Z-Axis (intensity) components of the display must be done in real time. Due to the speed of these display changes and the precise timing relationships that must be maintained between display events, direct sequencing of the display is beyond the capabilities of the processor control. Instead, control data from the processor is sent to the Display Sequencer (a specialized integrated circuit) which responds by setting up the various signals that control the stages handling real-time display signals. The controlled stages are stepped through a predefined sequence that is determined by the control data. Typically, as the sequence is being executed, the Display Sequencer will be changing vertical signal sources, Z-Axis intensity levels, triggering sources, and horizontal sweep signal sources. The specific activities being carried out by the Display Sequencer depend on the display mode called for by the control data.

Vertical deflection for crt displays comes from one or more of the four front-panel vertical inputs and, when displaying readout information, from the Readout circuitry. Signals applied to the front-panel Channel 1 and Channel 2 inputs are connected to their respective Preamplifiers via processor-controlled Attenuator networks. Control data from the Microprocessor defining the attenuation factor for each channel is serially loaded into the Auxiliary Control Register and then strobed into the Attenuator Mag-Latch Relays in parallel. The relay switches of each Attenuator network are either opened or closed, depending on the data supplied to the Mag-Latch Relay Drivers. The relays are magnetically latched and remain as set until new control data is strobed in. The Auxiliary Control Register is therefore available, and different mode data is clocked into the register to set up other portions of the instrument.

Attenuated Channel 1 and Channel 2 input signals are amplified by their respective Preamplifiers. The gain factor for the Channel 1 and Channel 2 Preamplifiers is settable by control data from the processor. The Channel 3 and Channel 4 input signals are amplified by their respective Preamplifiers by either of two gain factors set by control bits from the Auxiliary Control Register. All four of these preamplified signals are applied to the Vertical Channel Switch where they are selected by the Display Sequencer for display when required.

Each of the vertical signals is also applied to the A and B Trigger circuitry via trigger pickoff outputs from the Preamplifier stages. Any one of the signals may be selected as the trigger SOURCE for either the A or the B Trigger circuitry as directed by the Display Sequencer. The line trigger signal provides an added trigger source for A Sweeps only. Control data from the Microprocessor is written to the Trigger circuitry to define the triggering LEVEL, SLOPE, and COUPLING criteria. When the selected trigger signal meets these requirements, a sweep can be initiated. The Trigger circuit initiates both the A Sweep and the B Sweep as required by the display mode selected.

In the case of A Sweeps, the LO state of the THO (trigger holdoff) signal from the Display Sequencer enables the A Sweep circuit and the next A trigger initiates the sweep. For B sweeps, and in the case of intensified

sweeps, the A Sweep delay gate signal (DG) enables the B Sweep circuit. Depending on the B trigger mode selected, a B Sweep will be initiated either immediately (RUN AFT DLY) or on the next B trigger signal (TRIG AFT DLY). The slope of the sweep ramp is dependent on Microprocessor-generated control data loaded into the internal control register of the A and B Sweep circuit hybrids.

Sweep signals generated by each of the Sweep hybrids are applied to the Horizontal Amplifier. The Horizontal Amplifier is directed by the Display Sequencer to select one of the sweep ramps for amplification in sequence. In the case of Readout and X-Y displays, the X-Readout and CH 1 input signals are selected to be amplified, also under direction of the Display Sequencer.

To control the display intensity, the Display Sequencer directs the Z-Axis circuit to unblank the display at the appropriate time for the sweeps and readout displays. When the display is unblanked, the Display Sequencer selects the display intensity for either waveform displays or for readout displays by switching control of the Z-Axis beam current between the front-panel INTENSITY and READOUT INTENSITY potentiometers as appropriate.

During readout displays, the vertical dot-position signal from the Readout circuitry is applied to the Vertical Amplifier via the Vertical Channel Switch. Horizontal dot-position deflection for the readout display is selected by internal switching in the Horizontal Amplifier.

The vertical, horizontal, and Z-Axis signals are applied to their respective amplifiers where they are raised to crt-drive levels. The output signals from the Vertical and Horizontal Amplifiers are applied directly to the crt deflection plates. The Z-Axis Amplifier output signal requires interfacing to the high-potential crt environment before application to the crt control grid. The necessary Z-Axis interfacing is provided by the DC Restorer circuit located on the High-Voltage circuit board. The resulting display may be of waveforms, alphanumeric readout, or a combination of both.

DETAILED CIRCUIT DESCRIPTION

INTRODUCTION

The following discussion provides detailed information concerning the electrical operation and circuit relationships of the instrument. Circuitry unique to the instrument is described in detail, while circuits common in the electronics industry are not. The descriptions are accompanied by supporting illustrations and tables. Diagrams identified in the text, on which associated circuitry is shown, are located at the rear of this manual in the tabbed foldout pages.

PROCESSOR AND DIGITAL CONTROL

The Processor and Digital Control circuitry (diagram 1) directs the operation of most oscilloscope functions by following firmware control instructions stored in memory. These instructions direct the Microprocessor to monitor the front-panel controls and to send control signals that set up the various signal processing circuits accordingly.

Microprocessor

The Microprocessor (U2140) is the center of control activities. It has an eight-bit, bidirectional data bus for data display transfer (D0 through D7) and a 16-bit address bus (A0 through A15) for selecting the source or destination of the data. Precise timing of instruction execution, addressing, and data transfer is provided by an external, crystal-controlled clock signal.

The clock signal is developed by the Microprocessor Clock stage and applied to the Microprocessor at pin 39. Using the external clock as a reference, the Microprocessor generates synchronized control output signals, R/$\overline{W}$ (read-write), E (enable), and VMA (valid memory address) that maintain proper timing relationships throughout the instrument.

Microprocessor Clock

The Microprocessor Clock stage generates a 5-MHz square-wave clock signal to the Microprocessor and a 10-MHz clock signal to portions of the Readout circuitry. Flip-flop U2440A is a divide-by-two circuit that reduces the 10-MHz clock down to a 5-MHz square-wave signal used to clock the Microprocessor and the Display Sequencer. The 10-MHz clock is supplied to the Readout circuitry for dot timing and is also available for use with option circuitry.

Reset Control

The Reset Control circuitry ensures that, at power up, the Microprocessor begins program execution from a known point in memory and with all the processor registers in known states. It also allows the processor to reset itself when power is turned off so that the instrument powers down in a known state.

POWER UP SEQUENCE. Reset generator U2240 generates the power-up reset. As power is applied to the instrument U2240 tests the voltage at U2240 pin 7. The reset generator forces U2240 pin 5 LO, and the LO is applied to the processor $\overline{\text{RESET}}$ input (pin 40). After the SENSE input reaches its nominal voltage level, the reset condition continues to allow the microprocessor system time to reset. The reset continues for the time determined by C2350. The effect of power supply transients is reduced by C2241. After the suplies reach their nominal level and the delay period ends U2240 pin 5 goes HI. The RESET signal to the processor then goes HI to enable normal execution to begin, and the processor is directed to the starting address of the power-up routine, which it then performs.

POWER DOWN SEQUENCE. When the instrument power switch is turned off, the PWR UP signal from J251 pin 12 immediately goes LO. This LO generates the NMI (non-maskable interrupt) request to the processor on pin 6 which causes the processor to branch to the power-down routine. Under direction of that routine, the processor begins shutting down the instrument in an orderly fashion before the power supply outputs can drop below the operating thresholds. This routine disconnects the CH1 and CH2 50-Ω input terminations to protect them from accidental application of excessive voltage during storage or bench handling.

As the operating voltages are falling, the Reset circuitry must not generate a false RESET signal to the processor. Such a restart when the power supply voltages are outside their normal operating range would produce unpredictable processor operation that could alter the contents of the battery backed up RAM. When the processor has completed all the other power-down tasks, it finally sets the PWR DOWN signal HI via U2310 (diagram 2). This signal is applied to inverter U2540E at pin 11. Pin 10 of U2540E goes LO and immediately pulls pin 2 of Reset Generator U2240 LO. Reset Generator U2240 immediately switches state to assert the $\overline{\text{RESET}}$ signal to the processor. The $\overline{\text{RESET}}$ signal is held LO until the power supplies have fully discharged.

For diagnostic purposes, the PWR DOWN reset signal can be disabled. Moving jumper P503 to the DIAG (diagnostic) position keeps U2240 pin 2 HI. The RESET signal is therefore held HI, and the processor can execute a free-running NOP (no operation) loop without interruption if the PWR DOWN bit is set HI while the Address Bus is incrementing.

Address Bus

Octal Latches, U2415 and U2425 are used to buffer the address signals to the circuitry on the Processor Control board as well as provide additional drive current for the options. The RC network composed of R2465 and C2465 and inverter U2540B provide an additional >30 ns of address hold time on the buffered address signals for the options.

U2415 and U2425, along with Octal Latch U2405, allow the buffered Address Bus and Microprocessor control signals to be disconnected from the microprocessor. This allows in-circuit testing of the Processor Control board without having to remove the Microprocessor.

Data Bus

Tri-state buffer U2350 is used to buffer the data signals to the Microprocessor from other devices on the bus. When not enabled, the device is switched to isolate the processor from the buffered Data Bus. Buffer U2350 is enabled via the Read-Write Latch U2440B when the processor reads data from another device on the bus.

When the processor writes data onto the bus, Octal Latch U2450 is enabled by the Read-Write Latch U2440B. When the E (enable) signal at pin 11 of U2450 is HI, processor data bits are passed asynchronously through the latch to the buffered data bus. When the E signal goes LO, data bits meeting setup times are latched into the device. The latched Q outputs provide the required drive current to the various devices on the bus and ensure that data hold times are met for correct data transfer. When the Read-Write Latch places a HI on pin 1 of U2450, latch U2450 is disabled, and the outputs are switched to their high-impedance state.

Data transfers to and from the processor may be interrupted by removing Diag/Norm Jumper P503. This forces a NOP (no operation) condition that is useful for verifying the functionality of the processor (when a data-bus device is suspected of causing a system failure) or for troubleshooting the Address Bus and Address Decode circuitry. Moving the jumper to the DIAG position disables both U2350 and U2450 and disconnects the microprocessor from the buffered Data Bus. With the Data Bus disconnected, a resistor network pulls the processor Data Bus lines (D0 through D7) to a NOP (no operation) instruction. A NOP causes the Microprocessor to continuously increment through its address field. The Address Decode circuitry may then be checked to determine if it is operating properly.

Address Decode

The Address Decode circuitry generates enabling signals and strobes that allow the Microprocessor to control the various devices and circuit functions. The controlling signals are generated as a result of the Microprocessor placing specific addresses on the Address Bus. Figure 3-2 illustrates the enables and strobes generated by the Address Decode circuitry.

Address decoding is performed by a programmable logic device and 3 three-to-eight line decoders attached to the Address Bus. The five most significant address bits are decoded by U2250. This device initially separates the total addressable-memory space (64K-bytes) into thirty-two 2K-byte blocks. Addresses in the top 24K-byte memory space (address bit BA15 HI and either BA14 or BA13 HI) select one of two read-only memories (ROM); U2160 or U2360 (or U2260). When the VMA (Valid Memory Address) and E (Enable) outputs from the Microprocessor go HI, the selected ROM is enabled, and the data from the selected address location is read from the ROM. The remaining 8K-byte memory space (address bit BA15 HI and both BA14 and BA13 LO) select random-access memory (RAM); U2460. Both outputs of flip-flop U2440B are used to generate the $\overline{OE}$ and $\overline{WE}$ signals to the RAM.

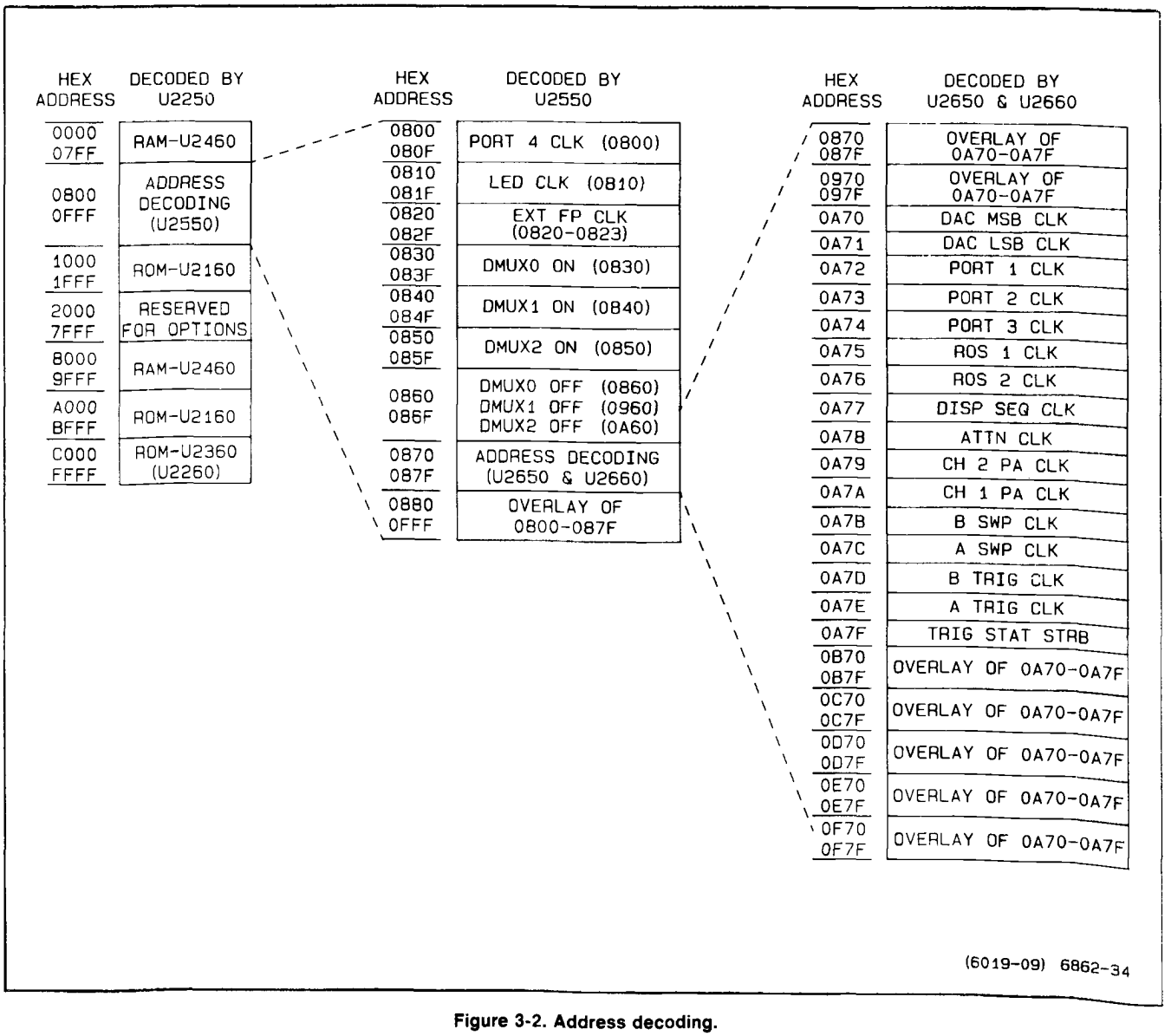

Figure 3-2. Address decoding.

Of the addresses in the bottom 32K-byte memory space, only the lowest 8K-bytes are further decoded. Addresses in the lowest 2K-byte block of addresses will cause U2250 to generate an enable signal to the RAM, U2460. Addresses in the next 2K-byte block of addresses will enable U2550 to do the next state of address decoding. The next 4K-byte block of addresses will enable the Buffer Board ROM section of U2160.

The level of decoding performed by U2550 uses address bits BA4, BA5, and BA6 to separate the addresses within the 2K-byte block of addresses 0800 thru 0FFF into 128 groups of 16 addresses. Address bits BA7 thru BA10 are not used in the decoding scheme, so each of these 128 blocks is not uniquely identified. This results in sixteen duplicate sections within the address block, each consisting of eight groups of 16 addresses. The upper fifteen sections in the address space are never used; therefore, decoding by U2550 may be more simply thought of as eight groups of 16 address locations. Addresses within these eight groups generate control signals to other portions of the instrument.

The final level of address decoding is done by a pair of three-to-eight-line decoders, U2650 and U2660. When enabled by the Y7 output of U2550, these decoders separate the highest 16-address group decoded by U2550 into 16 individual control signals.

Each of the control signals generated by the Address Decode circuitry are present only as long as the specific address defining that signal is present on the Address Bus. However, four of the addressable control signals decoded by U2550 are used to either set or reset flip-flops U2560A and B, and U2570A. The control signals are, in effect, latched and remain present to enable multiplexers U2521, U2530, (diagram 2), and U170 (diagram 4). When enabled, these multiplexers route analog control signals from the DAC (digital-to-analog converter) U2101 (diagram 2) to the various analog control circuits.

Read-only Memory (ROM)

The Read-only Memory consists of one 128K-byte ROM and one 64K-byte ROM that contain operating instructions (firmware) used to control processor (and thus oscilloscope) operation. Addresses from the Microprocessor that fall within the top 24K-bytes of addressable space cause one of the two read-only memory integrated circuits to be enabled. (See Address Decode description.) Instructions are read out of the enabled ROM (or PROM) IC from the address location present on its address input pins. The eight-bit data byte from the addressed locations is placed onto the Buffered Data bus (BD0 through BD7) to be read by the Microprocessor.

Random-Access Memory (RAM)

The RAM consists of integrated circuit U2460 and provides the Microprocessor with 8K-bytes of battery backed up temporary storage space for data that is developed during the execution of a routine. The RAM is enabled whenever an address in the lowest 2K-byte of addresses is placed on the Address Bus or whenever an address of 8000 thru 9FFF is placed on the Address bus. When writing into the RAM, the write-enable signal (WE) on pin 27 of U2460 is set LO along with the chip enable (CE) signal on pin 20. At the same time, the output-enable (OE) on pin 22 is HI to disable the RAM output drivers. Data is then written to the location addressed by the Microprocessor. If data is to be read from the RAM, the WE signal is set HI to place the RAM in the read mode, and the OE signal is set LO to enable the output drivers. This places the data from the addressed location on the buffered Data Bus where it can be read by the Microprocessor.

The RAM also provides non-volatile storage for the calibration constants and the power-down front-panel settings. When power is applied to the instrument, the Microprocessor reads the calibration constants and generates control voltages to set up the analog circuitry. The front-panel settings that were present at power-off are recalled and the instrument is set to the operating mode previous power off.

Timing Logic

The Timing Logic circuit composed of U2440B, and U2540D generates time- and mode-dependent signals from control signals output from the Microprocessor. The enable (E) signal output from the Microprocessor is a 1.25 MHz square wave used to synchronize oscilloscope functions to processor timing.

Data applied to the Address Bus, Data Bus, and various control signals are allowed to settle (become valid) before any of the addressed devices are enabled. This is accomplished by switching the E signal HI a short time after each processor cycle begins. Inverter U2540D inverts the polarity of the delayed enable signal and enables the Address Decode stage only after the address bus has settled.

Read-Write Latch U2440B is used to delay the processor's read/write signal (R/$\overline{W}$) from the Microprocessor to meet hold-time requirements of the RAM. At the same time, it generates delayed read and write enabling signals of both polarities to meet the requirements of Buffer U2350 and Latch U2450 (in the Microprocessor Data Bus) and various other devices in the Readout circuitry (diagram 7).

When R/$\overline{W}$ goes LO for a write cycle and E goes HI, Read-Write Latch U2440B is reset, and Q output (pin 9) is held LO, Latch U2450 is in its transparent state at this time, and data from the Microprocessor is applied asynchronously to the buffered Data Bus. At the end of the write cycle, the R/$\overline{W}$ signal goes HI. The E signal also goes through a negative transition, and data on the Microprocessor data bus lines is latched into U2450. The next positive transition of the 1.25-MHz E signal (1/2 E cycle after the R/$\overline{W}$ signal goes HI) clocks the HI level at U2440B pin 12 (the D input) to the Q output, and the $\overline{Q}$ output (pin 8) goes LO. The 1/2 E cycle delay between the time R/$\overline{W}$ goes HI and the time that the Q output of U2440B goes HI keeps Latch U2450 outputs on long enough to meet the data hold time for the RAM. At the end of that delay time, pin 1 of U2450 goes HI, and the Latch outputs are switched to the high-impedance state to isolate it from the buffered Data Bus.

READOUT FRAMING AND INTERRUPT TIMING. Binary counter U2640 is used to generate a readout-framing clock to the Readout circuitry and a real-time interrupt request to the Microprocessor via inverter U2540C. The readout-framing clock is a regular square-wave signal obtained from U2640 pin 12 by dividing the 1.25-MHz E signal by 512 (2^9). This clock tells the readout circuitry to load the next block (subframe) of readout information to be displayed. (See "Readout" description for further information concerning alphanumeric display.) The real-time interrupt request, which occurs every 3.3 ms, is obtained from pin 2 by dividing the E signal by 8192 (2^{13}).

When the real-time request occurs, $\overline{IRQ}$ (pin 4 of U2140) goes LO, and the processor breaks from execution of its mainline program. The Microprocessor first resets Binary Counter U2640 by setting pin 19 of U2301 (diagram 2) HI (to generate the reset), then it resets pin 19 LO to allow the counter to start again. At this time, the Microprocessor sets analog control voltages and reads trigger status from the Display Sequencer (diagram 5). When this is completed, it reverts back to the mainline program.

In addition to the analog control and trigger status update that occurs with each interrupt, on every fifth interrupt cycle, the Microprocessor also scans the front-panel potentiometers. Every tenth interrupt cycle, scanning the front-panel switches and checking the 50-Ω DC inputs for overloads is added to the previously mentioned tasks. If all the tasks are not completed at the end of one interrupt cycle, the real-time interrupt request restarts the analog updates, but as soon as those are accomplished, the Microprocessor will pick up with its additional tasks where it was before the interrupt occurred. This continues until all tasks are completed. If any pot or switch changes are detected, the Microprocessor updates the analog control voltages and the control register data to reflect those changes prior to reverting back to the mainline program instructions.

FRONT-PANEL SCANNING and ANALOG CONTROLS

The Analog Control circuitry (diagram 2), under Microprocessor control, reads the front-panel controls and sets various analog control voltages to reflect these front-panel settings. The calibration constants determined during instrument calibration and the last "stable" front-panel setup conditions are stored in battery backed up RAM. At power-on the stored front panel information is used to return the instrument to its previous state.

Hardware I/O

Data transfer from the Analog Control circuitry to the Microprocessor is via Status Buffer U2220. Data bits applied to the input pins are buffered onto the Data Bus when enabled by the Address Decode circuitry. Via the Status Buffer, the processor is able to (1) determine the settings of front- and rear-panel pots and switches, (2) determine instrument type (2465B or 2467B), (3) determine if a triggered sweep is in progress, and (4) read the contents of the Readout RAM. When disabled, the buffer outputs are switched to high impedance states to isolate them from the buffered Data Bus.

Data transfer from the Microprocessor to the Analog Control circuitry is via registers U2210 and U2310. Via register U2210, the Microprocessor is able to select the

pot-scanning multiplexers, turn the trigger LED on and off, and control other hardware via serial control data and the attenuator strobe. Via register U2310, the processor controls pot selection, and power down timing.

Front-Panel Switch Scanning

The Front-Panel Switches are arranged in a matrix of ten rows and five columns. Most of the row-column intersections contain a switch. When a switch is closed, one of the row lines is connected to one of the column lines through a diode. Reading of the switches is accomplished by setting a single row line LO and then checking each of the five column lines sequentially to determine if a LO is present (signifying that a switch is closed). After each of the five columns have been checked, the current row line is reset HI and the next row line is set LO for the next column scan cycle. A complete Front-Panel scan consists of all ten row lines LO in sequence and performing a five-column scan for each of the rows.

Row lines are set LO when the microprocessor writes a LO to one of the flip-flops in octal registers U2301 or U2201. The row data placed on the buffered Data Bus by the Microprocessor is clocked into the registers as two, eight-bit words by clocks from the Address Decode circuitry (DAC LSB CLK for the lower eight bits and DAC MSB CLK for the upper eight bits). All eight outputs of register U2201 and two outputs of U2301 drive the ten rows of the front-panel switch matrix (the fifth line of the matrix is not used). Series resistors in the lines limit current flow and eliminate noise problems associated with excessive current flow.

While each row is selected, the processor will scan each of the five column lines. To scan the columns, the microprocessor enables U2410 by the address decode circuitry. Data bits applied to the input pins are buffered onto the Data Bus.

In addition to the front-panel switches, the CAL/NO CAL jumper (P501) is checked to determine whether the instrument should be allowed to execute the calibration routines. The levels on U2410 pin 11 and 12 are read by scanning two additional columns at power-up. If the jumper is pulling the CAL bit LO, the operator will be allowed to use the calibration routines stored in firmware. If the NO CAL bit is pulled LO, the calibration routines may not be performed. If the jumper is removed, and neither bit is pulled LO, the Microprocessor is forced into a special diagnostic mode (CYCLE) used to record certain operating failures during long-term testing of the instrument. (See the "Maintenance" section for an explanation of the diagnostic modes.) Removing P501 or switching it between the CAL and NO CAL positions will not be recognized by the Microprocessor until the instrument is powered down and then turned back on.

The resistors in series with the input lines to U2410 are current-limiting resistors that protect the CMOS data buffer from static discharges. The resistors connected from the input lines to the +5 V supply are pull-up resistors for the front-panel column lines.

Digital-to-Analog Converter (DAC)

DAC U2101 is used to set the various analog references in the instrument and is used to determine the settings of the front panel potentiometer. The 12-bit digital values to be converted are written to octal registers U2301 and U2201 for application to the DAC input pins. The DAC then outputs two complementary analog currents that are proportional to the digital input data. (Complementary, in this case, means that the sum of the two output currents is always equal to a fixed value.)

The maximum range of the output currents is established by a voltage-divider network composed of R2010, R2012, R2013, R2014 and R2011 conected to the positive and negative reference current inputs of the DAC (pins 14 and 15 respectively). A +10-V reference voltage applied to the DAC through R2013 sets the basic reference current. Resistor R2011 and R2014 and potentiometer R2010 provide a means to adjust this current over a small range for calibration purposes. The nominal reference current is 1 mA, the DAC full-scale output current is 4 mA. The output currents flow through series resistors R2520 and R2521, connected to the +1.36-V reference, and proportional voltages result.

Pot Scanning

The Pot Scanning circuitry, in conjunction with the DAC, derives digital values for each of the various front-panel potentiometers. Scanning of the pots is accomplished by data selectors U2401, U2501, and U2601. Three bits are written to register U2310 and select the pot to be read. The bits are latched in the register and keep the pot selected until the register is reset. The Microprocessor writes a LO to the inhibit input pin (pin 6) of either U2401, U2501 or U2601 via register U2210 to enable the device. The enabled data selector connects the analog voltage at the wiper of the selected pot to comparator U2510.

Comparator U2510 compares the analog voltage of each pot to the output voltage from the DAC (pin 18). To determine the potentiometer output voltage, the processor performs a binary search routine that changes the output voltage from the DAC in an orderly fashion until it most closely approximates the voltage from the pot.

The conversion algorithm is similar to successive approximation and generates an eight-bit representation of the analog level. When the pot's value is determined, the Microprocessor stores that value in memory. Once all of the pots have been read and the initial value of each has been stored, the processor uses a shorter routine to determine if any pot setting changes. To do this the DAC output is set to the last known value of the pot (plus and minus a small drift value), and the status bit is read to see that a HI and LO occurs. If within the limits, the processor assumes that the pot setting has not changed and scans the next pot. When the processor detects that a pot setting has changed, it does another binary search routine to find the new value of that pot.

Analog Control

The operating mode and status of the instrument requires that various analog voltages (for controlling instrument functions) be set and updated. The digital values of the controlling voltages are generated by the Microprocessor and converted by the DAC. Analog multiplexers U2521 and U2530 (on diagram 2) and U170 (on diagram 4) route the DAC voltages to sample-and-hold circuits that maintain the control voltages between updates.

The Microprocessor writes three selection bits to register U2301 that directs the DAC output to the appropriate sample-and-hold circuit and charges a capacitor (or capacitors) to the level of the DAC. When the processor disconnects the DAC voltage from the sample-and-hold circuit (by disabling the multiplexer) the capacitor(s) remains charged and holds the control voltage near the level set by the DAC. Due to the extremely high input impedance of the associated operational amplifiers, the charge on the capacitor(s) remains nearly constant between updates.

FRONT-PANEL CONTROLS

The Front Panel is the operator's interface for controlling the user-selectable oscilloscope functions. Along with the crt, it provides visual feedback to the user about the present operating state of the instrument.

Most of the Front-Panel controls (diagram 3) are "cold" controls; i.e., they are not connected directly into the signal path. Therefore, associated circuits are not influenced by the physical parameters (such as capacitance, resistance, and inductance) of the controls. In addition, translating the analog output levels of most of the potentiometers to digital equivalents allows the processor to handle the data in ways that result in a variety of enhanced control features.

To maintain the front-panel operating setup between uses of the instrument, the digitized values of the potentiometers and front-panel switch settings are stored in battery backed up RAM so that when the instrument power is turned off, these control settings are not lost. Then, when power is next applied, the instrument will power up to the same configuration as when the power was last removed (assuming the settings of the non-digitized pots and switches remain the same).

The Front-Panel Controls also allow the user to initiate and direct the diagnostic routines (and when enabled, the calibration routines) programmed into the read-only memory (ROM). These routines are explained in the Maintenance section of this manual.

Front-Panel Switches

The Front Panel Switches are arranged in a ten-row-by-five-column matrix, with each switch assigned a unique location within the matrix (see Figure 3-3). A closed switch connects a row and a column together through an isolating diode. To detect a switch closure, the switch matrix is scanned once every 32 ms (every tenth Microprocessor interrupt cycle). When scanning, the Microprocessor sequentially sets each individual row line LO. A closed switch enables the LO to be passed through the associated diode to a column line. When the processor checks each of the five column lines associated with the selected row, the LO column is detected. The intersection of the selected row and the detected column uniquely identifies the switch that is closed. Further information about switch scanning is found in the "Front-Panel Scanning" description located in the "Analog Control" discussion.

As each switch is read, the processor compares the present state of the switch to its last-known state (stored in memory) and, if the same, advances to check the next switch. When a switch is detected as having changed, the processor immediately reconfigures the setup conditions to reflect the mode change and stores the new state of the switch in memory. The detected status of the switch on each of the following scan cycles is then compared against the new stored data to determine if the switch changes

again. The 32-ms delay between the time a switch is detected as having changed and the next time it is read effectively eliminates the effects of switching noise (switch bounce) that may occur after the switch is actuated.

Front-Panel Pots

The thirteen Front-Panel Potentiometers, READOUT INTENSITY, and INTENSITY are "cold" controls that control the linear functions of the instrument. (SCALE ILLUM and FOCUS are not considered part of the Front-Panel Control circuitry for the purposes of this description.) All are digitized and control their functions indirectly. Data Selectors U2401, U2501, and U2601 in the Analog Control circuitry (diagram 2) route the wiper arm voltage of the pot being read to comparator U2510 where it is compared with the output of DAC U2101. The processor changes the DAC output until it most closely matches the output voltage of the pot, then stores the digital value of the "match". See the "Pot Scanning" description in the "Analog Control" discussion for further information on the reading of pot values.

Like the switch matrix scanning, the Front-Panel pot scanning routine is performed every 16 ms. When entered, the routine reads the settings of the "last-moved" pot and one "unmoved" pot. Each succeeding scan continues to read the last-moved pot in addition to a new unmoved pot. In this way, each pot is monitored, but most of the scan time is devoted to the pot that is still moving (needing continuous updating).

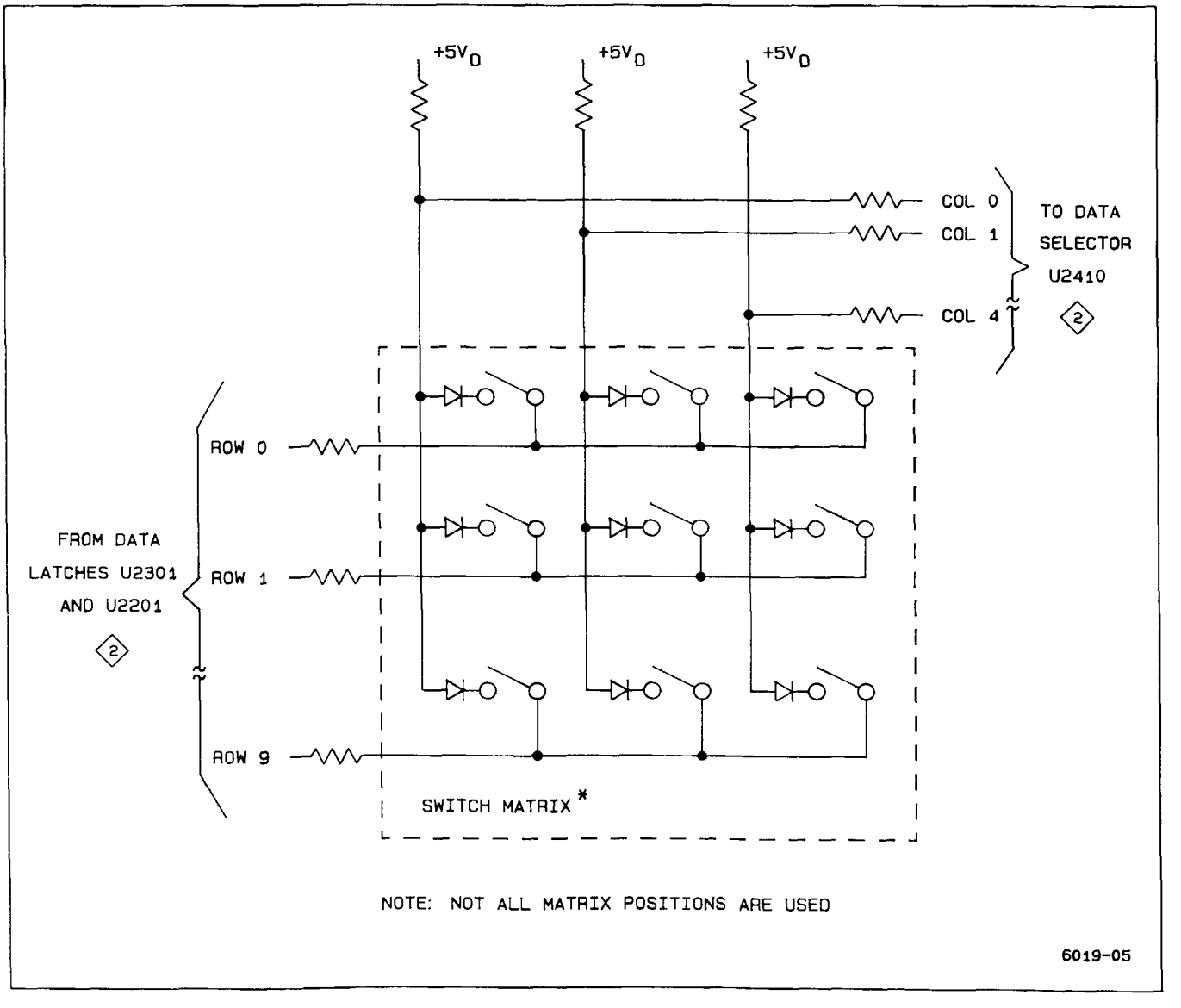

Figure 3-3. Front-panel switch matrix.

As the initial pot settings are determined, a digital representation of each value is stored in memory. The processor then checks each pot against its last-known value to determine if a pot has moved. If a pot is detected as moving, the processor executes a routine that converts the movement (displacement from last-set value) into a corresponding control voltage.

When producing the actual analog control levels, the processor can manipulate the digital values read for the various pots before sending the output data to the DAC. This allows many of the oscilloscope parameters to vary in an enhanced fashion. The pot data is manipulated by the processor in a manner that produces such features as variable resolution, continuous rotation, fine-resolution backlash, and electrically detented controls.

With all thirteen Front-Panel Potentiometers, READOUT INTENSITY, and INTENSITY controls, the processor reads the magnitude and direction of pot rotation and produces variable-resolution control voltages. If a pot's direction of rotation changes, the magnitude of the change from the last-set position remains small, or if it was not the last pot moved, a fine-resolution control voltage results. In the fine-resolution range, a given rotation displacement will cause a small control voltage change. The same displacement farther away from the last-set reference will cause a proportionally larger control voltage change, producing a coarse-resolution effect. If the changing pot is the last one moved and the direction of rotation remains the same, the algorithm continues from where it left off during the preceding scan; producing control voltage changes with the same increment as it was last using.

The delta reference controls (Δ REF OR DLY POS and Δ) are continuous-rotation potentiometers. They each consist of two pots ganged together with their wiper arms electrically oriented at 180° apart. As the wiper of one pot is leaving its resistive element, the wiper of the other pot comes onto its element. The Microprocessor has the ability to watch the output voltage from each wiper and when it detects that the controlling wiper is nearing the end of its range, it will switch control over to the other wiper. The routine the processor uses to watch these pots sets the associated control voltage on the basis of relative voltage changes (ΔV) that occur. Switching between the pots to change control to the opposite wiper arm is based on specific voltage levels being sensed.

Sensing specific voltage levels is also used when reading the VOLTS/DIV VAR, SEC/DIV VAR, and HOLDOFF controls. These pots have both a mechanical detent and a processor-generated electrical detent. As one of these controls is moved out of the mechanical detent position, the processor watches the analog voltage changes that occur; but the associated control voltage will not change until a specific voltage level (the electrical detent level) is reached. Once the electrical detent value is exceeded, the processor begins to vary the associated control voltage in response to further pot rotation. When returning to the mechanical position, the electrical detent level is reached first, and the variable voltage action is stopped before the mechanical detent is entered.

Front-Panel Status LEDs

Light-emitting diodes (LEDs) are used to provide visual feedback to the operator about the oscilloscope status and operating mode by backlighting front-panel nomenclature. A 48-bit status word, defining the diodes to be illuminated, is generated by the processor and then serially clocked into the six LED-Status Registers (U3001, U3002, U3003, U3004, U3005, and U3006). The registers hold the selected diodes on until the next update. Whenever the processor detects that a front-panel control has changed (and a new status display is required), a new status word is generated and applied to pin 1 of U3002. As each of the bits is clocked into the Q_A position of U3002, the preceding bit is shifted to the next register position. After 48 bits have been clocked into (and 40 bits through) U3002, all six LED-Status registers are full and contain the LED illumination pattern to be displayed to the user. A LO at any Q output of the registers illuminates the corresponding front-panel LED.

The TRIG'D LED is not driven by the LED-Status Register. It is driven by the Analog Control circuitry and illuminated whenever a triggered sweep is in progress.

ATTENUATORS AND PREAMPS

The Attenuators and Preamps circuitry (diagram 4) allows the operator to select the vertical deflection factors. The Microprocessor reads the Channel VOLTS/DIV switches and VOLTS/DIV VAR controls and then digitally switches the attenuator and sets the preamplifier gains accordingly.

CHANNEL 1 AND CHANNEL 2 ATTENUATORS

The Channel 1 and Channel 2 Attenuators are identical in operation, with corresponding circuitry in each channel performing the same function. Therefore, only the Channel 1 circuitry is described.

Input signals from the Channel 1 input connector are routed through an attenuator network by four pairs of magnetic-latch relay contacts. The position of the relays is set by Microprocessor data placed into Auxiliary Control Register U140. Relay buffer U110 provides the necessary drive current to the relays.

Four input coupling modes (1MΩ AC, GND, 1MΩ DC, and 50 Ω DC) and three attenuation factors (1X, ÷10, and ÷100) may be selected by closing different combinations or relay contacts. The three attenuation factors, along with the variable gain factors of the Vertical Preamplifier, are used together to obtain the crt deflection factors. The relays are magnetically latched and once set, remain in position until new attenuator-relay-setting data and strobes are generated. (See the "Auxiliary Control Register" description for a discussion of the relay-latching procedure.)

The 50 Ω termination resistor has a thermal sensor associated with it that produces a dc voltage (CH 1 OVL) proportional to the input power. Should the input power exceed the normal safe-operating level for the 50 Ω DC input, the termination resistor temperature will exceed the normal operating limit and change the output voltage of the thermal sensor. The amplitude of this dc level is periodically checked via comparator U2510 and DAC U2101 (on diagram 2) and allows the Microprocessor to detect when an overload condition is present. When an overload occurs, the processor switches the input coupling to the 1 MΩ position to prevent damage to the attenuator and displays 50 Ω OVERLOAD on the crt.

Compensating capacitor C105 is adjusted at the time of calibration to normalize input capacitance of the preamplifier to the attenuator.

A probe-coding ring around the BNC input connector passes probe coding information (a resistance to ground) to the Analog Control circuitry for detection of probe attenuation factors. The readout scale factors are set to reflect the detected attenuation factor of the attached probe.

Auxiliary Control Register

The Auxiliary Control Register allows the Microprocessor to control various mode and range dependent functions of the instrument. Included in these functions are: attenuation factors, input coupling, Channel 3 and Channel 4 gains, vertical-bandwidth limiting, the X-Y display mode, and the state of the measurement PAL.

When the Microprocessor sets the input coupling mode and attenuation factors for Channel 1 and Channel 2, a series of eight, 16-bit control words are serially clocked into shift registers U140 and U150 (eight bits in each register). Each control word is used to set the position of one of the eight attenuator and coupling relays (four relays are in each attenuator assembly). Each control word will have one HI bit. This bit will correspond to the specific relay contact to be closed. Relay buffers U110 and U130A (for Channel 1) and U120 and U130B (for Channel 2) are Darlington configurations that invert the polarities of all bits. This results in a LO being applied to only the coil lead associated with the contact to be closed; all other coil leads are held HI.

To set a relay once the control word is loaded, the Microprocessor generates a ATTN STRB (attenuator strobe) to U130G pin 7 via R129 and C130. The strobe pulses the output of U130G LO for a short time. This output pulse attempts to turn on both Q130 and Q131 (relay drivers) via their identical base-bias networks. Due to the lower level from the turned on Darlington relay buffer (coupled through the associated coil diode and either CR130 or CR131 to one of the bias networks), one transistor will turn on harder as the ATTN STRB pulse begins to forward bias the transistors. The more positive collector voltage of the transistor turning on harder is fed through the bias diode (again either CR130 or CR131) to further turn off the opposite transistor. This action results in one transistor being fully on and the other one being fully off. The saturated transistor sources current through the two stacked relay coils to the LO output of either U140 or U150 (current sink) to close the selected contacts. Once set, the magnetic-latch feature will hold the relay set to this position until opposing data is clocked into the Auxiliary Control Register and strobed into the relay. All coil leads for the remaining relays are set HI, and only the selected relay will be set.

To set the seven remaining Attenuator and coupling relays, the sequence just described is repeated seven more times. Whenever the Microprocessor determines that the attenuation factor or input coupling has changed, the entire relay-setting procedure is repeated for all eight relays.

After the coupling and attenuator relays have been latched into position, the Auxiliary Control Register is free to be used for further circuit-controlling tasks. Eight more bits of control data are then clocked into U140 either to enable or disable the following functions: vertical bandwidth limiting (BWL), triggered X-Y mode (TXY), the A and B Sweep Delay Comparators (BDCA and BDCA), and slow-speed intensity limit (SIL); or to alter the Channel 3 and Channel 4 gain factors (GA3 and GA4). Four other

bits are clocked into register U150: one to produce the CTC signal, one to control the scale illumination circuit during SGL SEQ display mode, and two (CNTL1 and CNTL2) to control the state of the measurement PAL, U975. The CTC control bit is used to enable a sweep-start linearity circuit in the A Sweep circuitry (diagram 5) on the 2 ns and 20 ns per division sweeps.

Analog Control Demultiplexer

When enabled by the Address Decode circuitry, Analog Control Demultiplexer U170 directs the analog levels applied to pin 3 from DAC U2101 (diagram 2) to one of six sample-and-hold circuits. In the Preamplifier circuitry, the sample-and-hold circuits maintain the VAR gain and DC Bal control-voltage levels applied to both the Channel 1 and Channel 2 Preamplifiers U100 and U200 between updates. Two of the Demultiplexers outputs direct analog levels to the Holdoff and Channel 2 Delay offset sample-and-hold circuits (diagram 5). Routing is determined by the three-bit address from register U2301 (diagram 2) applied to Demultiplexer U170 on pins 9, 10, and 11.

Channel 1 Preamplifier

Channel 1 Preamplifier U100 converts the single-ended input signal from the Channel 1 Attenuator to a differential output signal used to drive the Vertical Channel Switch. The device produces either amplification or attenuation in predefined increments, depending on the control data written to it from the Microprocessor. The preamp also has provisions for VAR gain, vertical positioning, and a trigger signal pickoff.

The Channel 1 vertical input signal is applied to pin A of Channel 1 Preamplifier U100. Control data from the processor is clocked into the internal control register via pin 22 (CD) by the clock signal applied to pin 23 ($\overline{CC}$). The data sets the device to have an input-to-output gain ratio of 2, 4, or 10, depending on the VOLTS/DIV control setting.

Two analog control voltages set by DACs modify the differential output signal at pins 9 and 10. The front-panel Channel 1 POSITION control supplies a position signal to U100 pin 17 (via MUX U2530 and sample-and-hold U2430 and C2432) that vertically positions the Channel 1 display on the CRT. A DC Bal signal is applied to pin 2 of U100 from MUX U170 via the sample-and-hold circuit composed of U160A and C177. This DC BAL signal is a dc offset-null level that is determined during the automatic DC Bal procedure. The offset value is stored as a calibration constant in RAM and is recalled at regular intervals to set the DC Bal level, holding the Preamplifier in a dc balanced condition.

The Channel 1 VOLTS/DIV VAR control is monitored by the Microprocessor during the front-panel scanning routine. When the processor has determined where the VOLTS/DIV VAR control is positioned, it causes DAC U2101 (diagram 2) to produce a corresponding control level and routes it to the VAR gain sample-and-hold circuit composed of U160D, C179, and associated components. The control voltage at the output of U160D (pin 14) sets the variable gain of the Preamplifier.

A pickoff amplifier internal to U100 conditions the trigger signal and provides the proper signal level at pin 15 to drive the A/B Trigger Generator (U500, diagram 5). The pickoff point for the trigger signal is prior to the addition of the vertical position offset, so the position of the signal on the crt has no effect on the trigger operation. However, the pickoff point is after the DC Bal and Variable gain signals have been added to the signal so both of these functions will affect trigger operation.

Common-mode signals are rejected from the trigger signal by the circuitry composed of operation amplifier U450B and associated components. The inverting input of U450B (pin 6) is connected to the common-mode point between APO+ (pin 12) and TPO− (pin 15) of U100. Any common-mode signals present are inverted and applied to a common-mode point between R451 and R453 to cancel the signals from the differential output. A filter network composed of LR 180 and the built-in circuit board capacitor (5.6 pF) reduces trigger noise susceptibility. Trigger signals for options are obtained from J100.

The Channel 1 input signal used to provide the horizontal deflection for the X-Y displays is obtained from U100 pin 11. The components between pin 11 and the Horizontal Output Amplifier provide phase compensation of the signal. During instrument calibration, the delay produced by C115, C116, L115, R115, and variable capacitor C118 is matched to the 78-ns delay of the vertical delay line (DL100, diagram 6).

Channel 2 Preamplifier

Operation of Channel 2 Preamplifier U200 is nearly identical to that of the Channel 1 Preamplifier just described. The exceptions are that the output polarity of the Channel 2 signal may be either normal or inverted and that the signal obtained from the BPO+ output (pin 11) is conditioned differently for a different purpose than in the Channel 1 Preamplifier circuitry.

Inverting the Channel 2 signal for the CH 2 INVERT feature is accomplished by biasing on different amplifiers. The control data clocked into the internal control register from pin 22 sets up the necessary switching.

The Channel 2 BPO+ signal at U200 pin 11 provides an accurate representation of the Channel 2 signal at the rear-panel CH 2 OUT connector.

Channel 3 and Channel 4 Preamplifier

The functions provided by the Channel 3 and Channel 4 Preamplifier are similar to those provided by the Channel 1 and Channel 2 Preamplifiers. The single-ended CH 3 and CH 4 input signals are converted to differential signals, and vertical gain and vertical positioning are added to the output signals. Trigger pickoff signals are generated for both channels and are routed to the Trigger hybrid.

Channel 3 and Channel 4 gains may be either 0.1 volt per division or 0.5 volt per division. The logic levels of control bits applied to U300 pin 30 (GA3) and pin 31 (GA4) from Auxiliary Control Register U140 sets the gain of the Channel 3 and Channel 4 preamplifiers respectively. Vertical positioning of the Channel 3 and Channel 4 signals on the crt is controlled by the voltage levels applied to pin 29 (POS3) and pin 32 (POS4) from the front-panel CH 3 and CH 4 POSITION potentiometers (via MUX U2530 and sample-and-hold amplifiers U2430C and C2333 and U2430D and C2332).

Dc offsets in the output signal due to any tracking differences between the +5-V and the −5-V supply to U300 are reduced by the tracking regulator circuit composed of U165A, Q190, and associated components. Operational amplifier U165A and Q190 is configured so that the output of voltage at the emitter of Q190 follows the −5-V supply applied to R198. This tracking arrangement ensures that the supply voltages are of equal magnitudes to minimize dc offsets in the output signals.

Scale Illumination

The Scale Illumination circuit consists of U130C, U130D, U130E, U130F, and associated components. The circuit enables the operator to adjust the illumination level of the graticule marks on the crt face plate using the SCALE ILLUM control.

Components U130C through U130F, depicted on diagram 4 as inverters, are actually Darlington transistor pairs. Figure 3-4 is a simplified illustration of the Scale Illumination circuitry, redrawn to show U130C through 130F as Darlington transistor pairs for the purpose of the following description.

Darlington transistors U130D and U130E control the current flow to scale-illumination lamps DS100, DS101, and DS102. Base drive current for U130D and U130E via R133 is set by the front-panel SCALE ILLUM pot R134. Voltage at the more negative end of the pot is set by the self-biasing configuration of U130F and R135. The voltage level established by these two components is two diode drops above ground (≈ 1.2 V) so that, at full counterclockwise rotation, the wiper voltage of the SCALE ILLUM pot will just match the turn-off point of U130D and U130E. The voltage at the other end of the pot is set by the collectors of U130D and U130E. As the SCALE ILLUM pot is advanced, the base drive to U130D and U130E increases, and the voltage on their collectors moves closer to ground potential. This increases the current through the scale-illumination lamps to make them brighter and produces some negative feedback to the base circuit through the SCALE ILLUM pot. Negative feedback stabilizes the base drive to U130D and U130E to hold the illumination level constant at the selected setting of the SCALE ILLUM control.

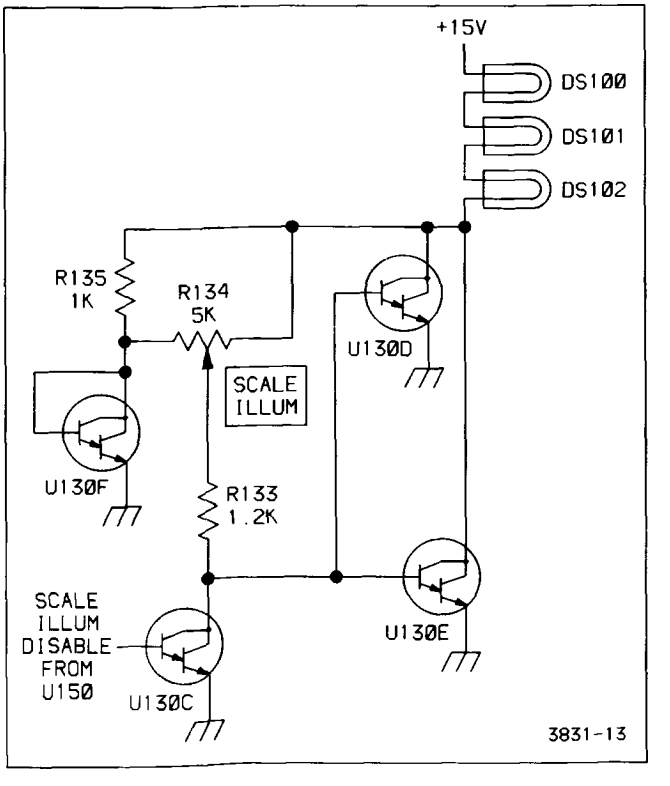

Figure 3-4. Scale illumination circuit.

During SGL SEQ display mode, the graticule is illuminated only once during the sequence for photographic purposes. In this mode, a HI is initially written to Auxiliary Control Register U150 (bit Q_H). This turns on U130C and shunts the base drive current of U130D and U130E to ground. At the point in the sequence when the graticule should be illuminated, the processor writes a LO to bit Q_H, and Q130C is turned off. This enables U130D and U130E to turn on the lamps to the illumination level set by the SCALE ILLUM pot.

DISPLAY SEQUENCER, TRIGGERS, AND SWEEPS

The Display Sequencer circuitry (diagram 5) controls and sequences the "analog-type" oscilloscope functions in real time, dependent on control data it receives from the Microprocessor. The A/B Trigger circuitry, under control of the Display Sequencer, detects when triggering requirements are met and initiates the appropriate sweep. The A Sweep and B Sweep circuits generate sweep ramps under control of the Display Sequencer when triggered by the A/B Trigger circuitry.

Display Sequencer

The Display Sequencer consists primarily of integrated circuit U650. This IC accepts analog and digital control signals from various parts of the instrument and, depending on the control data string clocked into its internal control register from the Microprocessor, will change control signals that it sends to other, signal-handling circuits.

In the course of developing waveform displays, the Display Sequencer selects one or more vertical channels, sets the trigger source, and selects the horizontal display mode. In most cases, the trigger selection does not change after it has been set unless a front-panel trigger control is changed. An exception is that in VERT TRIGGER MODE, the trigger source tracks the sequencing of the vertical channels (unless AUTO LVL MODE, or CHOP VERTICAL MODE is also selected). Trigger source selection lines are changed only during trigger holdoff time between sweeps.

Fifty-five bits of serial data from the processor defining the instrument's operating sequence are applied to the Display Sequencer data input, pin 25. The data string is clocked into U650 to the internal control register by the processor-generated control clock applied to pin 24. The data string is organized in several fields, with each field defining the operating mode of one specific instrument function.

Display Sequencer U650 controls the various functions defined by the data fields by setting the levels of the associated control lines. The functions and controlling signal lines for each function are as follows:

VERTICAL DISPLAY SELECTION. CH 1, CH 2, CH 3, CH 4, ADD, and Readout Y signals are selected by the $\overline{VS1}$, $\overline{VS2}$, $\overline{VS3}$, and $\overline{VS4}$ control signals. See the Vertical Channel Switch description for further information.

HORIZONTAL DISPLAY SELECTION. A Sweep, B Sweep, CH 1 (for X-Y displays) and Readout X are selected by the $\overline{HSA}$ and $\overline{HSB}$ control signals. See the Horizontal Output Amplifier description for further information.

TRIGGER SOURCE SELECTION. CH 1, CH 2, CH 3, CH 4, ADD, Line, and a sample of the vertical output signal (for calibration purposes only) are selectable as the Trigger SOURCE by the $\overline{SR0A}$, $\overline{SR1A}$, $\overline{SR2A}$, $\overline{SR0B}$, $\overline{SR1B}$, and $\overline{SR2B}$ control lines (pins 28, 27, 29, 32, 31, and 30 respectively). See the A/B Trigger description for further information.

TRIGGER HOLDOFF. Sweep recovery time and the circuit initialization time required when front-panel controls are changed are controlled by the THO (trigger holdoff) signal.

DELTA TIME (Δt) DELAY SELECTION. DLY REF 0 or DLY REF 1 is selected by the $\overline{DS}$ (delay select) signal.

TRIGGER and SWEEP ACTIVITY (STATUS). The activity of the Trigger and Sweep circuits, as indicated by the $\overline{SGA}$, $\overline{SGB}$, $\overline{TSA}$, and $\overline{TSB}$ lines, is reported to the Microprocessor via the TSO (trigger status output) line when clocked by the $\overline{TSS}$ (trigger status strobe) signal.

INTENSITY CONTROL. The readout intensity, display intensity, and display intensity compensation are controlled by the BRIGHT output level.

DISPLAY BLANKING. Display blanking for CHOP VERTICAL MODE, Readout transitions, and front-panel control changes is controlled by the BLANK output.

READOUT CONTROL. The vertical selection, horizontal selection, and intensity controls are all set to their readout modes either at the end of an A Sweep ($\overline{SGA}$ goes HI) or in response to a readout request ($\overline{ROR}$) from the Readout circuitry (diagram 7). While in the readout mode,

the BLANK control signal is driven by the readout blank ($\overline{ROB}$) input signal on pin 5 (also from the Readout circuitry). The readout active line ($\overline{ROA}$, pin 6), when set LO, tells the Readout circuitry that readout dots may be displayed if necessary. The $\overline{ROA}$ signal is always set LO at the start of the trigger holdoff time following sweeps, and it is held there until the holdoff time is almost over. This allows the majority of holdoff time to be used for displaying readout dots. The Display Sequencer will switch the $\overline{ROA}$ signal back to HI before the end of holdoff so that the readout display does not interfere with display of the vertical signal at the triggering event.

TRACE SEPARATION. Vertical separation between the A Sweep trace and the B Sweep traces (for alternate horizontal sweep displays), and between the reference B Sweep trace and the delta B Sweep trace (when delta time is selected in B Sweep only mode), is enabled by the TS1+TS2 output.

X10 HORIZONTAL MAGNIFICATION. Horizontal X10 magnification is controlled by the $\overline{MAG}$ output.

CALIBRATOR TIMING. The 5-Hz to 5-MHz drive signal to the Calibrator circuitry is provided by the CT output.

DELAY GATE OPERATION. Analog Switches U850B and U850C select the delay references for each sweep. Depending on the display mode and point in the display sequence, the DS control signal (U650 pin 40) routes one of the two analog delay references through U850B and U850C to the two sweep hybrids. The selected reference level is compared against the changing sweep ramp voltages to generate the delay gates that control each sweep's functions.

After an A Sweep has been initiated by a trigger, a delay gate circuit within U700 compares the A Sweep ramp voltage to the selected delay reference. When the sweep ramp reaches the delay reference level, the DG (delay gate) output goes LO, enabling the B trigger portion of U500 and B Sweep hybrid U900. Then, when B triggering occurs (for TRIG AFT DLY mode), the A/B Trigger hybrid sets the $\overline{TGB}$ (trigger gate B) signal LO, initiating the B Sweep. In RUN AFT DLY mode, however, the $\overline{TGB}$ signal to U900 is held LO, and the B Sweep is initiated at the end of the A Sweep delay time when the A Sweep delay gate goes LO.

STATUS MONITORING. As the Display Sequencer controls the display system in real time, it continually monitors the trigger and sweep operations and updates the internal trigger status register accordingly. The Microprocessor checks the contents of this register every 3.3 ms to determine the current status of the trigger and sweep circuitry. The Microprocessor reads the trigger status register by generating a series of trigger status strobe ($\overline{TSS}$) pulses (U650 pin 19) to serially clock the contents of the register out to the TSO (trigger status output) line and onto the Data Bus (via Status Buffer U2220 on diagram 2). The system status information obtained by this check is used for AUTO LVL triggering, AUTO free-run triggering, detecting the completion of all sweeps in a SGL SEQ display, automatic measurement functions, and during instrument calibration.

INTENSITY CONTROL. The Display Sequencer controls the intensity for both sweep and readout displays. The analog levels at pins 22 and 23 determine the basic intensity level of the displays. Two internally generated DAC currents (developed by multiplying the IREF current at pin 20 by two processor-generated numbers stored internally) are added to the basic intensity level currents to produce the display intensity seen on the crt (see Table 3-1). The two DAC currents added to the INTENSITY current are dependent on sweep speed, number of channels being displayed, and whether or not the X10 MAG feature is in use. These added currents increase crt beam current and hold the display intensity somewhat constant under the varying display conditions. The resulting current is applied to Z-Axis Amplifier U950 (diagram 6) from the BRIGHT output of the Display Sequencer (pin 21).

To produce the intensified zone on the A Sweep trace for A intensified by B Sweep displays, an additional current is added to the crt drive signal by the Z-Axis Amplifier during the concurrence of the $\overline{SGAZ}$ and $\overline{SGBZ}$ (sweep gate A and B z-axis) signals.

The readout intensity (ROI) level, controlled from the front-panel READOUT INTENSITY pot (via MUX U2530 and sample-and-hold U2630A and C2732). The Microprocessor increases readout intensity when the pot is rotated either direction from center. Minimum readout intensity current occurs at the midpoint of the READOUT INTENSITY pot rotation. The Microprocessor also detects to which side of center the READOUT INTENSITY control is set. Depending on the status received, the processor sets up the Readout circuitry (diagram 7) to display either all of the readout information or just the "delta type" readouts.

Blanking of the crt display during CHOP VERTICAL MODE displays or when switching between dot positions in the readout displays is controlled by the Display Sequencer's BLANK output (pin 3). When the signal is LO, the crt z-axis is turned on to the selected intensity level; when HI, the crt display is blanked.

Table 3-1
Intensity Control

Type of Display	Horizontal Selects		Resulting Current at BRIGHT Output
	HSA	HSB	
X/Y	LO	LO	DI (display intensity) only
A Sweep	LO	HI	DI + A SWP DAC current
B Sweep	HI	LO	DI + B SWP DAC current
Readout	HI	HI	ROI (readout intensity) only

READOUT CONTROL. The readout request signal ($\overline{ROR}$), the readout active signal ($\overline{ROA}$), and the readout blank signal ($\overline{ROB}$) control readout displays. During the first part of the holdoff time, up until one or two holdoff ramps before holdoff time ends (dependent on the sweep rate), the Display Sequencer sets the $\overline{ROA}$ signal line LO. While the $\overline{ROA}$ line is LO, the Readout circuitry may display readout character dots if necessary. During readout displays, the horizontal and vertical select signals ($\overline{HSA}$, $\overline{HSB}$, $\overline{VS1}$, $\overline{VS2}$, $\overline{VS3}$, and $\overline{VS4}$) are all set HI. This deselects the waveform-related sweep and deflection signals and gives display control to the Readout circuitry. While readout information or cursors are being displayed, the BLANK output signal (pin 3) is controlled by the readout blank ($\overline{ROB}$) signal from the Readout circuitry, and the readout intensity (ROI) signal pin (pin 23) controls the BRIGHT output level.

During holdoff, the Display Sequencer always sets the readout active ($\overline{ROA}$) line LO. As previously described, setting the $\overline{ROA}$ signal LO allows the Readout circuitry to display readout dots. In some settings of the SEC/DIV switch, with adequate trigger rates, holdoff time is provided for the Readout circuitry to display all the readout information without causing noticeable display flicker.

In those cases where the holdoff time is insufficient to prevent flicker, a portion of the Readout circuitry will request display control by setting the readout request ($\overline{ROR}$) signal LO. The Display Sequencer recognizes all readout requests immediately and switches the horizontal and vertical select lines to the readout display mode. The Readout circuitry displays one readout dot and then resets the readout request HI to switch back to the display of waveforms. Readout requests occur as required during sweep times, keeping the readout display up to date. (See "Readout" description for further information).

TRACE SEPARATION. The TRACE SEP feature is used to position the alternate B Delayed Sweep trace downward from the A Sweep when Alternate Horizontal Display Mode (TURN-ALT) is active. It is also used when either the Δt or $1/\Delta t$ measurement function is used with B Sweep only displays. In the latter case, the TRACE SEP control vertically positions the trace(s) associated with the Δ control.

When the Display Sequencer determines that trace separation should be active, the LO TSIN level at pin 7 is routed to pins 9 and 8, the TS1 and TS2 outputs (connected together). This LO output turns off transistor Q600 (diagram 6), thereby enabling the trace separation voltage from the front-panel TRACE SEP pot (via MUX U2530 and sample-and-hold U2630C and C2631) to be applied to pin 42 of Vertical Output Amplifier U600. To disable the trace separation function, the Display Sequencer sets the TS1 + TS2 control line HI, turning on Q600 and shunting the trace separation signal to ground.

X10 MAG SELECT. The $\overline{MAG}$ (sweep magnifier) output (pin 39) drives the magnifier control input (pin 14) of Horizontal Output hybrid U800 and the select input (pin 9) of analog switch U860C (diagram 6). Analog switch U860C routes a magnifier gain-control voltage to the Horizontal Amplifier to set the horizontal gain for the X10 magnified displays.

CH 2 DELAY OFFSET. The $\overline{VS2}$ (vertical select, channel 2) output applied to analog switch U860B at pin 10 routes a calibrated offset voltage from sample-and-hold buffer U165D to both sweep hybrids when the Channel 2 vertical signal is being displayed. The offset voltage is used to eliminate the apparent propagation delay between the Channel 2 and the Channel 1 (or CH 2 and either one of the other channels). A step in the calibration procedure allows use of the front-panel Channel 2 Delay Offset feature to be either enabled or disabled. When enabled, the Channel 2 offset may be adjusted up to ± 500 ps (with respect to Channel 1) using the Δ control.

CALIBRATOR TIMING. The Calibrator timing signal (CT) from the Display Sequencer is generated by an internal counter. The counter divides the 5-MHz clock input at pin TC (timing clock) by a value that is a function of sweep speed. The resulting square-wave output signal drives the Calibrator circuit. For ease of sweep rate verification, the Calibrator signal provides a display of five complete cycles on the crt at sweep speeds from 100 ms per division to 0.1 μs per division. Below 100 ms per division, the Calibrator output frequency remains at 5 Hz; and above 0.1 μs per division, the Calibrator frequency remains at 5 MHz.

When chopping between vertical channels, the Display Sequencer adds a 200-ns skew at the end of some sweeps to desynchronize the chop frequency from the sweep speed (to prevent the sweep from locking onto the chop frequency). Due to this, the Calibrator signal has an irregular pulse repetition characteristic between sweeps. This will not be apparent when observing the Calibrator signal on the instrument crt since the skew is synchronized to the sweep, but may be observed when the Calibrator output signal is used with other instrumentation. The skew can be eliminated by setting the instrument to SGL SEQ Mode (to shut off the sweeps).

Holdoff Circuitry

The holdoff circuit, used to delay the start of a sweep until all circuits have recovered from the previous sweep, is made up of U165C, Q154, Q155, and associated components. Operational Amplifier U165C and capacitor C180 form a sample-and-hold buffer used to set the charging current for holdoff-ramp integrating capacitor C171 (C660 for the 2467B). A control voltage from digital-to-analog converter (DAC) U2201 (diagram 2) via multiplexer U170 (diagram 4) is stored on C180. The stored voltage level sets the base voltage for both Q154 and Q155 via amplifier U165C. Transistors Q154 and Q155 form a current-mirror with nearly equal collector currents. Transistor Q154 is a current-to-voltage converter that provides negative feedback to U165C, setting loop gain. Transistor Q155 acts as a constant-current source that charges integrating capacitor C171 (C660 for the 2467B), producing a linear holdoff ramp.

A comparator circuit in U650 detects when the ramp crosses a predefined threshold voltage (approximately +3 V). When the threshold is reached, pin 10 of U650 (HRR) goes LO and the integrating capacitor is discharged. At that same time, an internal counter that keeps track of the holdoff ramp cycles is incremented. The ramps continue to be generated and reset until the holdoff ramp counter has counted the number of ramp cycles defined by the sweep-rate-dependent holdoff data field stored in the Display Sequencer control register. At all sweep speeds except 5 ns per division, the count is at least two holdoff ramp cycles. The front-panel variable HOLDOFF control affects holdoff time by varying the HOLDOFF control voltage to U165C (from the DAC), changing the charging rate of integrating capacitor C171 (C660 for the 2467B).

When holdoff time requirements are met (determined by the number of ramps counted), the Display Sequencer sets the THO (trigger holdoff) signal LO. This enables both the A Sweep hybrid (U700) and the A Trigger circuitry in U500. The Trigger circuit begins monitoring the selected trigger source line and, when a triggering event is detected that meets the triggering requirements defined by the stored control data, initiates the A Sweep and sets the $\overline{\text{TSA}}$ (trigger status, A Sweep) line to Display Sequencer U650 LO (indicating that the A Sweep has been triggered).

As the A Sweep circuit (U700) responds to the trigger, it sets the $\overline{\text{SGA}}$ (sweep gate A) line LO (via U980A) indicating that an A Sweep is in progress. After the sweep has run to completion, U700 sets the $\overline{\text{SGA}}$ line HI signaling the end of sweep. The Display Sequencer then sets the THO line HI, resetting A/B Trigger hybrid U500 and A Sweep hybrid U700 in preparation for the next sweep.

HOLDOFF BOARD (2467B ONLY). Holdoff ensures that the sweep generator fully recovers between successive sweeps. It inhibits the sweep and trigger for a specific holdoff time after each sweep. The Display Sequencer (U650) sets THO (Trigger HOldoff, pin 13) high, which resets and inhibits both the A trigger and the A sweep. Then, after the holdoff time elapses, THO is set low, enabling the A trigger and A sweep to respond to the next trigger event. The Display Sequencer and external circuitry form a holdoff timer.

The holdoff timer operates only while $\overline{\text{SGA}}$ (not Sweep Gate A, at the base of Q159) is high. Holdoff time is proportional to a number of holdoff-timer cycles, counted by the Display Sequencer, according to the selected sweep speed. A capacitance and a charging current determine the duration of each holdoff-timer cycle. The HOLDOFF control varies the current to adjust the cycle duration in the range from about 1 μs to about 15 μs.

The circuit comprising operational amplifier U165C and transistors Q154 and Q155 generates the charging current for the holdoff timing capacitors C660, C169, C173, and C174. When the voltage on C174 rises above +5 V, comparator U168B drives the HRR terminal of the Display Sequencer U650 high, through emitter follower Q158, diode U1169H, diode-connected Q161, and R177. C172 also charges to about +4 V. The Display Sequencer then drives HRR back to ground and counts one holdoff-timer cycle. Stored charge in the base-collector junction of diode-connected Q161 supplies the high current needed to rapidly switch HRR from low to high and R177 limits the current required from U650 to drive HRR back from high to low. When HRR is driven below the voltage on C172, comparator U168A discharges C660, C169, C173, and C174.

When both the output of comparator U168A is low and $\overline{\text{SGA}}$ is high, Q157, R179, R178, and U169F form a current mirror. This establishes a discharge current for C169, proportional to the charging current from the collector of Q155, and normalizes the operation of the circuit for all settings of the variable HOLDOFF control.

Triggers

The A/B Trigger hybrid (U500) and associated circuitry select the triggering signal source for each horizontal sweep as directed by the Display Sequencer. When the proper triggering criteria to initiate a sweep are detected, a triggering gate signal is produced to start the selected sweep.

Control data from the processor defining trigger mode, coupling, and slope parameters for each trigger is clocked into two storage registers internal to U500 by the A TRIG CLK signal on pin 23 ($\overline{CCA}$) and the B TRIG CLK signal on pin 47 ($\overline{CCB}$). The Display Sequencer selects the A trigger source with the $\overline{SR0A}$, $\overline{SR1A}$, and $\overline{SR2A}$ signal lines; the B trigger source is selected using the $\overline{SR0B}$, $\overline{SR1B}$, and $\overline{SR2B}$ signal lines. Table 3-2 illustrates trigger source selection.

Table 3-2
Trigger Source Selection

Select Inputs			Trigger Source
SR2A(B)	SR1A(B)	SR0A(B)	
H	H	L	CH 1
H	L	H	CH 2
H	L	L	ADD
L	H	L	CH 3
L	L	H	CH 4
H	H	H	LINE (or BWLB)[a]

[a]During calibration routines from the Diagnostic Monitor.

To initiate the A Sweep, the trigger hybrid compares the selected signal to the analog trigger level input at pin 13, the TLA (trigger level A). B trigger signals are compared to the TLB (trigger level B) signal at pin 37 when trigger B Sweeps are required. When the proper trigger signal is detected, U500 outputs a trigger gate ($\overline{TGA}$ or $\overline{TGB}$) to the appropriate sweep circuit to initiate that sweep.

When an A Sweep is initiated, the trigger-status line ($\overline{TSA}$) (trigger status A, U500 pin 20) goes LO to signal the Display sequencer that a trigger has occurred. Until the sweep is completed, the $\overline{TGA}$ signal on pin 18 (or $\overline{TGB}$ signal on pin 42 for B Sweeps) remains LO. After the A Sweep is completed, the A Sweep Gate ($\overline{SGA}$) from A Sweep hybrid U700 (via U980A) will go HI, causing the Display Sequencer to set its THO (trigger holdoff) line (pin 13) HI. This resets the sweep hybrid and the trigger hybrid in preparation for the next trigger event.

The B Trigger Holdoff input (THOB, U500 pin 39) is held HI (keeping the B Trigger reset) until the A Sweep Delay Gate (DG, U700 pin 41) goes LO (see the following A Sweep description). When DG goes LO, the B Trigger portion of U500 is enabled. The B Sweep Trigger functions in a manner similar to that of the A Sweep Trigger just described. During a parametric measurement, the THOB line may be driven by either A Sweep Delay Gate or BHO from the measurement PAL, U975. If CNTL1 is LO, THOB is driven by A Sweep Delay Gate through the buffer transistor Q741. If CNTL1 is HI, Q741 is held off by Q742 and THOB is driven by BHO.

A Sweep

When properly triggered, the A Sweep circuit generates linear sweep ramps of selectable slopes. When amplified, these ramp signals horizontally sweep the crt beam across the face of the crt. The A Sweep circuitry consists of U700, Q709, Q710, Q741, U910B, U980A, and associated components.

The A Sweep ramp signal is derived by charging one of several selectable capacitors from a programmable constant-current source. Capacitor selection depends on the sweep-rate-dependent control data (CD) on pin 29 that is clocked into A Sweep hybrid U700 by the A SWP CLK on pin 28 ($\overline{CC}$). This sweep-rate data causes some internal logic to select either hybrid-mounted capacitors CT0 or CT1 or capacitor C708 at the CT2 (timing capacitor two) pin. An additional capacitor, C709, may be selected (via Q709 and Q710) if the control data asserts the TCS (timing capacitor select) signal on pin 9. TCS will be HI for A Sweep speeds slower than 1 ms per division. Capacitor C707 and associated circuitry form a linearity compensation circuit.

The constant current to charge the selected capacitor is derived from the DAC-controlled voltage, A TIM REF (A timing reference), generated on the Control Board. The ITREF input (U700 pin 24) is held at zero volts by an internal programmable current-mirror circuit at that input (see Figure 3-5). The A TIM REF voltage is applied to the current mirror via series resistors R723 and R724 to establish the input reference current (ITREF). The output of this current mirror is related to the input reference current by a multiple "M" that is set by a control data field

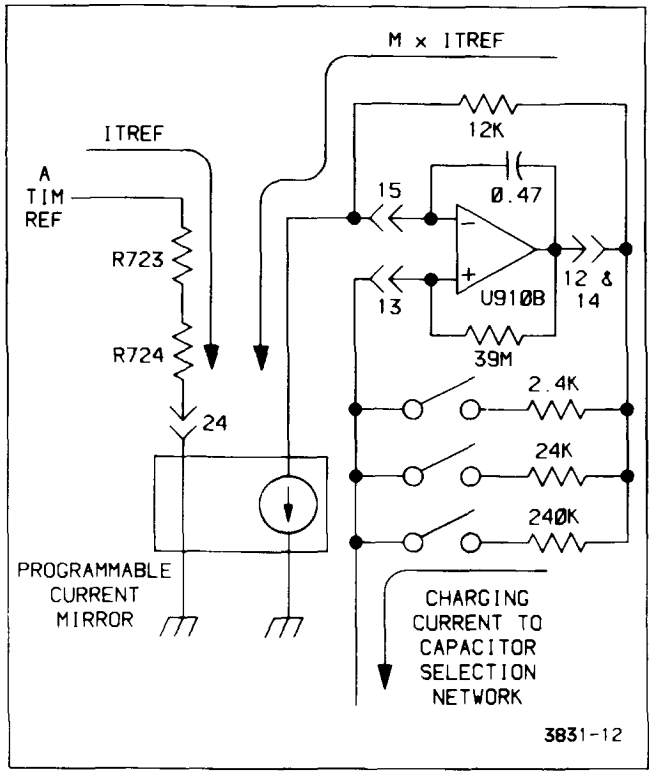

Figure 3-5. Sweep generator.

stored in the internal control register of U700. The derived output current (M x ITREF) is connected to another programmable current-mirror circuit, U910B, external to the hybrid. The output of U910B provides the actual charging current and is a control-data-selected multiple of the M x ITREF current.

At the time of calibration, the processor will vary the ITREF input current until the slope of the output ramp for specific current-mirror/timing capacitor combinations is precisely set. The values of A TIM REF at these settings allow the processor to precisely calculate the characteristics of the current-mirror circuits at their various multiplication factors and the charging characteristics of the timing capacitors. These values are stored as calibration constants in nonvolatile memory (RAM U2460, diagram 1).

Once the calibration constants are set, any setting of the SEC/DIV switch causes the Microprocessor to recall the associated calibration constants from RAM. The processor then calculates the proper value of A TIM REF based on the selected timing capacitor and the current-mirror multiplication factors.

If the SEC/DIV VAR control is out of the calibrated detent position, the processor will decrease the A TIM REF voltage from the maximum, in-detent value by an amount proportional to the position setting of the VAR control. At the maximum, fully counterclockwise setting of the VAR control, the ITREF current is one-third that of the normal, in-detent current.

For A Sweep hybrid U700 to initiate a sweep at the selected rate, the $\overline{\text{AUXTRIG}}$ (auxiliary trigger) input (pin 3), the THO (trigger holdoff) line from the Display Sequencer (on pin 1), and the $\overline{\text{TRIG}}$ (trigger) line from the trigger hybrid (on pin 2) must all be LO. With these three inputs LO, the A SWEEP ramp begins, and the sweep gate ($\overline{\text{SG}}$) output (pin 45) goes LO. The buffered sweep gate signal ($\overline{\text{SGA}}$) at the output of U975 returns to the Display Sequencer through R981 to indicate that the A Sweep is active. The sweep gate signal is used by various other circuits for their timing activities and is held LO until the A SWEEP ramp ends. The buffered (negative) sweep gate is inverted and routed to the rear-panel A GATE output connector via U975.

Diodes CR752 and CR753 and associated components form a charging network that permits delaying the timing of the end-of-A-Sweep gate signal ($\overline{\text{SGAZ}}$) for B Sweep displays. For normal A Sweep operation with the $\overline{\text{SGBZ}}$ signal HI, the SGAZ signal will end quickly, since the capacitance associated with Z-Axis hybrid U950 input (diagram 6) will be charged positively through both R753 and R754. For B Sweep operation ($\overline{\text{SGBZ}}$ is LO), the end of the SGAZ gate signal will be delayed slightly (with respect to the normal sweep gate) since charging of the Z-Axis input capacitance will be at a slower rate through R754 only. This allows more of the B Sweep to be displayed than would otherwise be possible.

The A Sweep Delay Gate (DG) signal acts as the trigger holdoff (THO) signal for the B Sweep and the B Trigger circuitry. It is generated by comparing the A SWEEP ramp voltage to the selected delay reference (DR) level from analog switch U850C. As the ramp voltage crosses the delay reference level, the delay gate (DG) output signal goes LO, removing the HI THO level to the B Sweep. This enables the B Sweep to run immediately in RUN AFT DLY B Trigger Mode or, when in TRIG AFT DLY B Trigger Mode, enables the B Sweep to run when a B triggering event occurs.

The BDCA (A Sweep bypass-delay comparator) input (U700 pin 39) is a data bit from Auxiliary Control Register U140 (diagram 4) that, when HI, sets the A Sweep DG

output LO at the beginning of the A Sweep. This enables the B Sweep to run immediately at the start of the A Sweep and is used for calibration purposes and for options.

The capacitive load (part of the etched-circuit board) at the RDA (retrace delay adjust) input (U700 pin 4) is used to delay the retrace of the sweep until the Z-Axis drive is fully turned off in response to the SGAZ gate going HI. This delay prevents any part of the retrace from being seen.

B Sweep

Operation of B Sweep hybrid U900 is similar to that just described for the A Sweep with the following exceptions: the THO input (and thus sweep enabling) is controlled by the A Sweep hybrid or the measurement PAL and not the Display Sequencer (see the preceding A Sweep description). The timing capacitor select output, TCS, is not used, and only three timing capacitors are selectable (two on the B Sweep hybrid at CT0 and CT1 and one externally at CT2).

Calibrator

The Calibrator circuit, composed of Q550, U165B, U550A, B, C, and D, and associated components, generates a square wave output of precise amplitude and frequency characteristics. The CALIBRATOR signal provided at the front-panel output connector is useful for adjusting probe compensation and verifying VOLTS/DIV, SEC/DIV, and Δt (delta time) calibration. Output frequency is controlled by the Display Sequencer and is set to display five cycles across the ten crt graticule divisions at sweep speed settings from 100 ns per division to 100 ms per division. This feature allows quick and easy verification of the sweep rates. The Calibrator circuitry is essentially a voltage regulator that is alternately switched on and off, producing the square-wave output signal.

When the timing signal (CT) from the Display Sequencer to the base of U550D is LO, U550C (configured as a diode) is forward biased, shunting bias current away from Q550, keeping it turned off. When transistor Q550 is off, the front-panel CAL OUT connector is pulled to ground potential through R558, setting the lower limit of the CALIBRATOR output signal.

As the CAL signal goes from LO to HI, the emitter of U550D is pulled HI to reverse bias U550C. Bias current for Q550 is established, and the transistor is turned on. The voltage at the emitter of Q550 rises to a level of +2.4 volts, determined by the voltage regulator composed of U165B, U550A, U550B, and associated components. This regulated level is applied to the front-panel CALIBRATOR connector through a voltage-divider network composed of R557 and R558. This produces an output voltage of 400 mV with an effective output impedance of 50 Ω.

Since the frequency of the CALIBRATOR signal is controlled by the same divider chain that controls operation of the vertical chopping rate, the intentional 200-ns shift added to the chop signal at the end of some sweeps (to desynchronize the chopping rate from the sweep rate) shows up on the CALIBRATOR signal as an irregular-width pulse. This shift is not apparent when viewing the CALIBRATOR signal on the instrument providing the signal (since the skew occurs during sweep-retrace time), but it should be taken into account when using the CALIBRATOR signal with other instrumentation. The skew can be eliminated from the signal by setting the instrument TRIGGER MODE to SGL SEQ (to shut off the sweeps).

PARAMETRIC MEASUREMENTS

The VOLTS Parametric Measurement is made using the same methods and circuitry that is used in the Auto Level trigger mode to find the peak voltages. The accuracy of the VOLTS measurement is based on the accuracy of the trigger level and the DC balance of the instrument.

All of the time-based Parametric Measurements use the A and B Sweep gates and delay gates as the basis for the measurements.The measurement PAL, U975, controls the signal flow while in the Parametric mode. The measurement flip-flop, U980B, reports the state of a variety of conditions to the SLIC through the $\overline{SGB}$ line. The SLIC data is read by the processor system and used to compute the desired measurement.

VERTICAL CHANNEL SWITCH AND OUTPUT AMPLIFIERS

The Vertical Channel Switch (diagram 6) selects the signal source for vertical deflection of the crt beam. The Vertical, Horizontal, and Z-Axis output amplifiers provide the signal amplification necessary to drive the crt.

Vertical Channel Switch

The Vertical Channel Switch consists of hybrid Channel Switch U400, that selects one of the vertical signals for application to the Vertical Output Amplifier, and a combined switch/amplifier circuit that converts the single-ended readout vertical signal into a differential signal for application to the Channel Switch.

Channel selection is controlled by the Display Sequencer $\overline{VS1}$ through $\overline{VS4}$ signals applied to the vertical channel selection pins (pin 24, pin 25, pin 13, and pin 14 respectively). (See Table 3-3 for the Vertical Display Selection.) When a vertical select line is LO, the associated input signal pins are connected to the differential output (+OUT, pin 11 and −OUT, pin 3). The CH 5 input signal

Table 3-3
Vertical Display Selection

Select Inputs				Vertical Display
VS1	VS2	VS3	VS4	
L	H	H	H	CH 1
H	L	H	H	CH 2
L	L	H	H	ADD
H	H	L	L	CH 3
H	H	H	L	CH 4
H	H	H	H	Readout (Y)

(Readout Vertical) is added to the output whenever both the $\overline{VS3}$ and $\overline{VS4}$ select signals are HI but will only contain readout information when the readout select logic (U975A and U975C) detects that the Display Sequencer has set both the Horizontal Select signals ($\overline{HSA}$ and $\overline{HSB}$) HI (readout selected).

READOUT SWITCH/AMPLIFIER. Transistors U485A, U485B, U485C, U485D, and U475C, along with their associated components, make up an analog switch circuit that routes either the readout vertical signal at the base of U485A or the ground reference at the base of U485C to the output at the emitter of U475C. The signal selected depends on the complementary voltages applied to the emitter junctions of the two emitter-coupled transistor pairs, U485A and B and U485C and D. The selection voltages are developed by voltage-divider networks on the complementary logic outputs of U975A and U975C.

When readout information is to be displayed, the horizontal select inputs to U980B and U980C go HI and the output of NAND-gate U975C goes LO. The LO applied to the divider network of R498, R484, and R471 pulls the anode of CR484 low enough to reverse bias it. This forward biases the emitter-coupled pair U485A and B via R483. NAND-gate U975A inverts the LO and applies a HI to the junction of R497 and R485. The HI forward biases CR485, and the emitters of U485C and D are pulled to a level in excess of +2 V, reverse biasing the transistor pair. With U485C and D reverse biased, the ground reference level at the base of U485C is isolated from the output, while the readout vertical information is allowed to pass through the forward-biased transistor pair.

When readout information is not being displayed, a HI is present at the output of NAND-gate U975C. The HI forward biases CR484 and, when inverted by U975A, reverse biases CR485. With the biasing conditions reversed, the transistor pair of U485C and D becomes forward biased and U485A and B becomes reversed biased. The ground reference level present at the base of U485C is coupled to the output, while the readout vertical signal is isolated.

The output signal (either the readout vertical signal or the ground reference level) is applied to the CH5+ input of Channel Switch U400 via R495 and R412. The inverting amplifier circuit composed of U475A, U475B, U475D, and associated components inverts the readout vertical signal for application to the CH5− input. The amplifier is an inverting unity-gain configuration with transistors U475A and U475B connected as an emitter-coupled pair. The base of U475A is referenced to ground through R482. The base of U475B is pulled to the same level by the negative feedback from emitter-follower U475D through R478. The noninverted signal is applied to the base of U475B through R492 and will attempt to increase or decrease the current to the base of U475B, depending on the amplitude and polarity of the signal. However, the negative feedback from the collector of U475B (via U475D and R478) will hold the base of U475B at the ground reference level. The feedback current through R478 develops a voltage drop across R478 that is equal in amplitude but opposite in polarity to the noninverted vertical readout signal. The inverted readout signal is applied to the Channel Switch on pin 2 (CH5−) via R476 and R402.

The HF ADJ (high-frequency adjust) potentiometer R417 and resistor R416 (connected to pin 16) adjust the high-frequency response of the Channel Switch hybrid.

Vertical Output Amplifier

Vertical Output Amplifier U600 is a hybrid device that provides the final amplification of the selected vertical signal, raising it to the level required to drive the crt deflection plates. Vertical deflection signals from the Vertical Channel Switch are delayed approximately 78 ns by Delay Line DL100. This delay allows the Sweep and Z-Axis circuits to turn on before the triggering event begins vertical deflection of the crt beam, thereby permitting the operator to view the triggering event. The bridged-T network, composed of inductors and capacitors built into the circuit board, corrects phase-distortion introduced by the delay line. The RLC networks connected between the output pins of U400 are adjusted during calibration to obtain the correct overall high-frequency response of the vertical deflection system. The vertical signal from the Delay Line is applied to pins 10 and 3 of U600. The RL network connected between pins 8 and 5 (COMPA and COMPB) of U600 compensates the signal for the skin-effect losses associated with the delay line.

Amplifier gain and vertical centering are adjusted by R638 and R639 respectively, primarily to match the amplifier hybrid to the crt installed in the instrument. On the 2465B, the Dynamic Centering circuit sinks an intensity-dependent correction current away from the vertical centering input at pin 39. The correction signal holds the vertical centering stable over a wide range of varying display intensities. Readout jitter adjustment pot R618 is used to minimize thermal distortion in the output amplifier to reduce jitter in the display readout.

The vertical output signal at pins 28 and 33 of U600 (OUT A and OUT B) is applied to the vertical deflection plates of the crt (diagram 8) via L628 and L633. The deflection plates form a distributed-deflection structure that is terminated by a hybrid resistor network. One element of the terminating network is an adjustment potentiometer used to match the network impedance to that of the crt.

BANDWIDTH LIMITING. Bandwidth limiting coils L644 and L619, along with capacitors built into U600, form a three-pole filter used to roll off high-frequency response of the Vertical Output amplifier above 20 MHz. To limit the vertical bandwidth, the $\overline{BWL}$ (bandwidth limit) input to U600 (pin 16) is pulled LO. It may be set LO either by the BWL control data bit from Auxiliary Control Register U140 (diagram 4) when the operator selects the Bandwidth Limit feature or automatically by the output of NAND-gate U975A in the Vertical Channel Switch circuitry (via CR616) when the readout is being displayed.

TRACE SEPARATION. The voltage applied to the TS (trace separation) input of U600 (pin 42) is used to offset the output levels to vertically shift the position of the trace on the crt. During normal sweep displays, TS1 + TS2 signal applied to the base of Q600 by the Display Sequencer (diagram 5) is HI, and the transistor is turned on. The TRACE SEP level at the junction of R642 and CR600 is shunted to ground, and no offsetting at the output signal will occur. For those displays in which trace separation should occur, the Display Sequencer switches the base of Q600 to ground level to turn off the transistor. The trace separation level set by front-panel TRACE SEP control R3190 (via MUX U2530 and sample-and-hold circuit U2630C and C2631) is applied to the TS input of U600, and a corresponding offset of the displayed trace will occur.

BEAM FIND. As an aid in locating off-screen or overscanned displays, the instrument is provided with a beam-finding feature. When the front-panel BEAM FIND button is pushed, the beam-find input pin (BF, pin 15) of U600 will be pulled HI. While BF is HI, the dynamic range of Vertical Output Amplifier U600 is reduced, and all deflected traces will be held to within the vertical limits of the crt graticule.

Also, the activation of the BEAM FIND switch is detected by the microprocessor during its normal Front-Panel Switch Scanning. When detected, the microprocessor initiates a CRT Wakeup sequence for 2467B instruments and generates a User Request SRQ if option 10 is installed.

OUTPUT PROTECTION CIRCUIT. A current-limit circuit composed of transistors Q623 and Q624 protects the Vertical Output Amplifier from a short-circuited output or a bias-loss condition. Either of these fault conditions will cause excessive current to flow into pins 30 and 31 of U600. Current in FET Q624 is limited to the IDSS current, so the voltage at pins 24, 30 and 31 will drop. This decreases the forward bias on pass-transistor Q623 and lowers the voltage at pin 23 of U600 enough to provide some degree of protection for the device.

Horizontal Amplifier

The Horizontal Amplifier circuitry consists of a Horizontal Output Amplifier U800, a unity-gain buffer amplifier made up of the five transistors in U735, and associated components.

UNITY-GAIN BUFFER AMPLIFIER. The amplifier circuit composed of U735A, B, C, D, and E along with their associated components, form a unity-gain amplifier that buffers the ramp signal from A Sweep Generator U700 to the Horizontal Output Amplifier. Transistors U735C and D form a differential pair with the negative excursion of their emitters limited to −5 V (clamped by U735E). Negative feedback from the collector of U735C to its base is via emitter-followers U735A and B (in parallel) which drive the A Sweep input (pin 18, A+) of Horizontal Output Amplifier U800.

HORIZONTAL OUTPUT AMPLIFIER. Integrated circuit U800 provides the final amplification of the selected horizontal-deflection signal required to drive the crt. One of the single-ended input signals applied to the four input pins is converted to a differential-output signal at the output pins of the amplifier. The four deflection signals to U800 are: the A sweep (pin 18, A+), the B Sweep (pin 16, B+), the Readout Horizontal signal (pin 17, RO) and the Channel 1 signal (used for horizontal deflection of the X-Y displays) at pin 20, the X+ input pin. Signal selection is done by an internal channel switch and is controlled by the $\overline{HSA}$ (horizontal select A) and $\overline{HSB}$ (horizontal select B) signals from the Display Sequencer (see Table 3-4).

Table 3-4
Horizontal Display Selection

Control Level		Selected Signal
HSA	HSB	
H	H	Readout (X)
H	L	B Sweep Ramp
L	H	A Sweep Ramp
L	L	X Input (from CH 1)

Switching between unmagnified (X1) gain and magnified (X10 gain) is also controlled by signals from the Display Sequencer. For normal horizontal deflection, the $\overline{MAG}$ signal on pin 14 of U800 is HI, and the gain of the output amplifier produces normal sweep deflection. Precise X1 deflection gain is set by adjusting X1 Gain pot R860. When the X10 MAG feature is selected, amplifier gain for the magnified sweeps is increased by a factor of 10. The $\overline{MAG}$ signal from the Display Sequencer goes LO when magnified sweep is to be displayed. This switches the amplifier gain and switches analog switch U860C from the X1 position to the X10 position. Amplifier gain in the magnified mode is adjusted by adding or subtracting a small bias current using X10 Gain control R850. Dc offsets in the amplifier and crt are compensated for, using Horiz Centering pot R801 to precisely center the display. On the 2465B, an intensity-dependent position correction signal, used to hold the horizontal centering stable over a wide range of varying display intensities, is also added at this point by the Dynamic Centering circuitry.

Timing and linearity of the sweep is affected by the amplifier transient response; and Trans Resp pot R802, connected to pin 2, is adjusted during calibration for optimum accuracy of the high-speed sweeps.

As with the Vertical Output Amplifier, the Beam Find feature reduces the dynamic range of the Horizontal Output Amplifier. While the front-panel BEAM FIND button is pressed in, a HI is placed on U800 pin 15 via pull-up resistor R615, and the horizontal deflection is reduced, moving horizontally off-screen displays to within the graticule viewing area.

Z-Axis Amplifier

Z-Axis Amplifier U950 turns the crt beam off and on at the desired intensity levels as the oscilloscope goes through its display sequence. The BRIGHT (brightness) signal applied to U950 pin 44 from the Display Sequencer U650 (diagram 5) is amplified to the level required to drive the crt control grid (via the DC Restorer circuitry) and sets the crt beam intensity. The BLANK input signal applied to U950 pin 5, also from the Display Sequencer, blanks the trace during sweep retrace, chop switching, and readout blanking by reducing the VZ OUT signal to a blanked level. Sweep gate z-axis signals ($\overline{SGAZ}$ and $\overline{SGBZ}$) from the A Sweep and B Sweep hybrids (U700 and U900) respectively, (diagram 5) are applied to the Z-Axis Amplifier on pins 4 and 3. These signals turn the beam current on and off for the related displays and, when used in conjunction with the BLANK signal on pin 5, enable the sweeps to be blanked while still allowing the Readout circuitry to blank and unblank the crt for the readout displays.

Control signals applied to U950 pin 48, pin 2, and pin 1 ($\overline{HSA}$, $\overline{HSB}$, and TXY respectively) switch some internal logic circuitry to enable or disable different input signals for the various types of displays. Table 3-5 illustrates the effects of the various input signals on the output signal for different combinations of $\overline{HSA}$, $\overline{HSB}$, and $\overline{TXY}$.

The Z-Axis hybrid has an internal limiter circuit that prevents the crt from being damaged during high-intensity, high-repetition-rate displays. A signal representative of the intensity setting and the sweep repetition rate is integrated on C957 and results in a control level at pin 7 of U950 used to limit intensity of the crt beam. Maximum Grid drive is controlled by R949 on U950 pin 9.

Focus tracking for intensity (VZ OUT) level changes is provided by the VQ OUT (quadrapole output voltage) signal at pin 22 of U950. The VQ OUT signal varies the focusing voltages (and thus the focusing strength) of two quadrapole lenses in the crt (diagram 8). The VQ OUT signal is related to the VQ OUT level exponentially and provides the greatest auto-focus control at high intensity levels. Gain of the VQ OUT signal is set by the High-Drive Focus adjustment, R1842. On the 2465B, the VQ OUT signal also drives the Dynamic Centering circuit and holds the display position stable during wide-range intensity level changes.

On the 2467B, the transient response of the Z-Axis Amplifier is adjusted by potentiometer R1834, connected to U950 at pin 13.

Dynamic Centering (2465B only)

The circuit composed of U3401, U3402, and associated components generates compensating signals to offset positioning effects that occur in the crt when the intensity is varied over a wide range. The VQ OUT signal from Z-Axis Amplifier U950 is exponentially proportional to the display intensity and dynamically controls the intensity-dependent offsets.

Table 3-5
Blanking and Intensity Control Selection

Control Inputs			Intensity Affected By	Blanking Affected By	Typical Display
TXY	HSA	HSB			
X[a]	H	H	BRIGHT (RO level)	BLANK	Readout
X	H	L	BRIGHT, Z EXT	BLANK, SGAZ, SGBZ	Delayed Sweep
X	L	H	BRIGHT, SGBZ,Z EXT	BLANK, SGAZ	Main Sweep
L	L	L	BRIGHT, SGBZ, Z EXT	BLANK	X-Y
H	L	L	BRIGHT, SGBZ, Z EXT	BLANK, SGAZ	X-Y

[a]X = State doesn't matter.

Dynamic Centering adjustment pots R3401 and R3407 set the gain and polarity of the signals at their related outputs by varying the current in the emitter circuit of one of two emitter-coupled pairs of transistors. Adjusting the bias level, at either pin 4, above $\simeq -10.6$ volts (determined by R3410 and R3411 at the complementary inputs, pins 1) will generate an inverted signal, while adjusting the bias levels below -10.6 volts will cause a noninverted signal. Amplitude of the resulting signal is dependent on how far from the -10.6-volt reference the bias is set. The output signal is added or subtracted from the position voltage applied to the Vertical and Horizontal Output Amplifiers. Both pots are adjusted so that position shifts due to display intensity variations are minimized.

READOUT

The Readout circuitry (diagram 7) is responsible for displaying the alphanumeric readout characters in the crt. An eight-bit character code specifying each character (or cursor segment) to be displayed is written from the Microprocessor to a corresponding location in the Character RAM U2920 (a 8K-x-8-bit, random access memory integrated circuit). Each of the following 128 locations in the RAM, address locations 0 through 63 for the first and fourth readout lines and 128 through 191 for the second and third readout lines, corresponds to one of the 128 possible character locations in the crt readout display (see Figure 3-6). The next 128 RAM locations, address locations 64 through 127 for the first and fourth readout lines and 192 through 255 for the second and third readout lines, are used to store cursor segment information for the display of the ΔV and Δt measurement cursors. The eight-bit character code written to each location in RAM points to a block of addresses in Character ROM U2930. This block in the ROM contains the dot-position information for the specific character to be displayed at the associated crt position.

Each character is made up of zero (for a space character) or more dots displayed in an eight-wide by sixteen-high dot matrix. Specific blocks of ROM addresses contain all the X-Y offset coordinates for the dots in a particular character in the readout. The coordinates are referenced to the lower-left corner of the character dot matrix. Each individual data byte in the block of ROM addresses contains both the X and the Y coordinates for one dot of the associated character.

To display a character, a combination of the character position on the crt (the RAM address) and the byte of X-Y position data from Character ROM U2930 (relative to that character position) is applied to Horizontal and Vertical DAC (digital-to-analog converters) circuits, U2910 and U2905 respectively. In these circuits, the X-Y position data is converted to analog deflection signals used to position each dot in the crt readout display. Each of the position bytes are read from the block of ROM defining the character under control of the readout timing and sequencing circuitry. The resulting dots, when displayed in sequence, form the character at the proper location on the crt.

Readout I/O

The Readout I/O circuitry, composed of U2860, U2865, U2960, and associated components, provides the interface between the Microprocessor and the Readout board. Two types of data, Readout mode data and character data, are written to the Readout board serially via data bus line BD0.

STORING A CHARACTER. Displaying a character starts with serially clocking 16 character data bits into a 16-bit shift register formed by registers U2960 and U2860. The $\overline{ROS1}$ strobe (readout strobe one) from the Address Decode circuitry (diagram 1) is the clocking signal. The first eight bits of the loaded data indicate the character to be displayed, while the last eight select the location on the crt that the character is to be displayed.

On positive-going transitions of the $\overline{ROS1}$ strobe, the data bit present on the BD0 data line is shifted into the first latch of character address register U2960. The following negative-going edges of the $\overline{ROS1}$ strobe are inverted by U2965A to produce a positive transition that shifts the data bit present at U2960 pin 9 (Q_{SH}) into U2860. After 15 $\overline{ROS1}$ strobes have occurred, seven bits of character data are latched into U2860, and the eighth character bit and seven of the character address bits are latched into character address register U2960 (though they have not been shifted into their correct positions for addressing the RAM).

At this point, the last character bit remains to be shifted into the registers, but the operating mode must be set up first to ensure correct operation upon shifting in the final bit. The eight bits of mode data are shifted into the mode

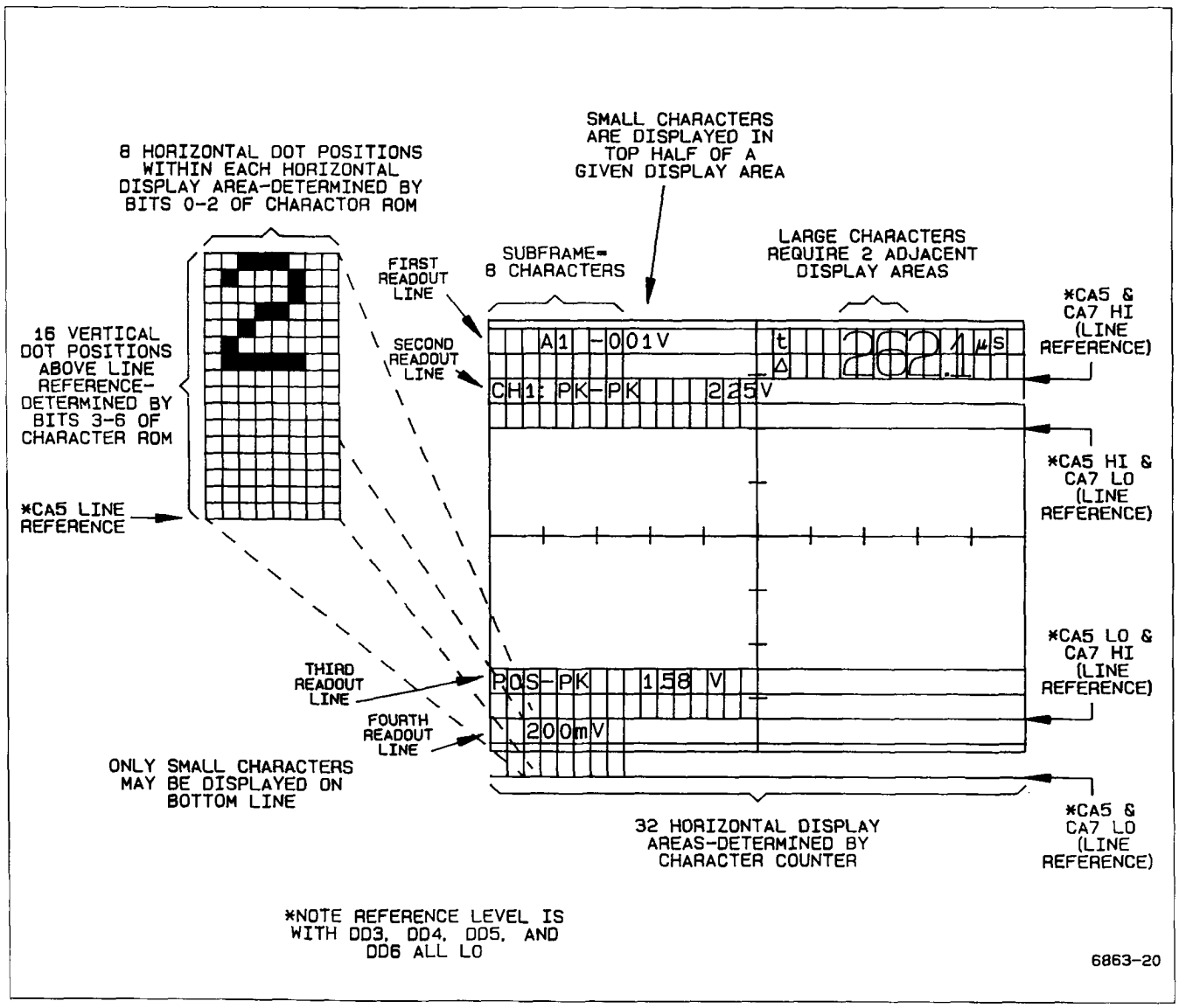

Figure 3-6. Developing the readout display.

control register U2865 by the $\overline{ROS2}$ strobe. Bit Q_4 ($\overline{WRITE}$), along with the $\overline{ROS2}$ and the R/ $\overline{W}$ DLYD signal are applied to the RAM enabling circuitry and determine when new character information will be written into the Character RAM. With U2865 loaded with the mode data, a final $\overline{ROS1}$ strobe clocks the eighth bit of character data from U2960 to U2860 on the negative edge, and the positive edge of the strobe clocks the eighth character address bit into U2960.

With control bit Q_4 from U2865 LO, the outputs of U2860 are enabled and the eight bits of character data (CD0 through CD7) are written in parallel into the Character RAM at the location selected by the eight-bit address from U2960. Register U2960 is enabled only when the Readout is not displaying characters (the REST signal at pin 15 of U2960 is HI).

The character data register U2860 also provides a means for the Microprocessor to read data from the Character RAM for partial verification of Readout circuit operation (during the power-up tests). The eight bits of parallel data from the Character RAM location selected by character address register U2960 are loaded into U2860 by setting bit Q_3 of mode control register U2865 LO. Inverter U2965C converts the LO to a HI and applies it to character-register U2860 at pin 1. The HI on pin 1, in combination with the fixed HI on pin 19 of U2860, switches the character register to the Parallel Load mode. The next positive transition of the $\overline{ROS1}$ strobe loads the eight data bits placed on the CD0 through CD7 bus lines into the register in parallel. Bit Q_3 is then returned HI, and the next positive transition of the $\overline{ROS1}$ strobe shifts the Q_A bit to pin 8 (Q_A'), the RO DO (readout data out) line. Seven more $\overline{ROS1}$ strobes shift the remaining seven bits of character data out onto the RO DO line to Status Buffer U2220 (diagram 2) to be read, one at a time, by the processor.

Character RAM

Character RAM U2920 provides temporary storage of the readout character selection data. This character data is organized as 256 eight-bit words that define the character that should be displayed at any given readout position on the crt. Cursor information is also stored in U2920 when cursors are to be displayed.

RAM locations may be addressed either from the Readout I/O stage by character address register U2960, as previously described, or by the Character Counter stage. Each of the following 128 address locations corresponds to a specific readout location on the crt. Address locations 0 through 63 correspond to the first and fourth readout lines and 128 through 191 to the second and third readout lines. The next 128 address locations store cursor information. Address locations 64 through 127 correspond to the first and fourth readout line storage and 192 through 255 to the second and third readout line storage. The eight bits of data written to one of these locations from the Readout I/O stage is a code that identifies the specific character (or cursor segment) that should be displayed at the associated crt location. After the display data is written into the RAM, the Character Counter is allowed to address the RAM, incrementing through the RAM address field. The eight-bit character codes for each display location are output to Character ROM U2930 in sequence.

Character Counter

The Character Counter stage consists of two four-bit counters (both within U2940) cascaded together to form an eight-bit counter and tristate buffer U2935 which drives the RAM address lines.

As the Character Counter addresses each RAM location (the counter also determines the character screen location), a sequence of "dot display cycles" is performed in which the individual dots that make up the character are positioned on the crt and turned on. The $\overline{EOCH}$ (end of character) signal applied to U2855A prevents the counter from incrementing until all dots of the character have been displayed. As the last dot of a character is addressed, the $\overline{EOCH}$ bit at pin 2 of U2855A goes LO. The next $\overline{GETDOT}$ pulse increments U2940 (via U2855A), and the next RAM location is addressed to start the display of the next character. Space characters have the $\overline{EOCH}$ bit set LO for the first "dot" of the character and merely advance the Counter to the next character address without displaying any dots. See the Character ROM description for further explanation of the $\overline{EOCH}$ bit.

Character ROM

Character ROM U2930 contains the horizontal and vertical dot-position information for all of the possible characters (or cursor segments) that may be displayed. The eight bits of character data from the Character RAM are applied to the eight most-significant address inputs (A4 through A11) of the Character ROM and select a block of dot-positioning data unique to the character to be displayed. The Dot Counter increments the four least-significant address lines (A0 through A3), causing the ROM to output a sequence of eight-bit words, each defining a dot position for the selected character.

The three least-significant bits of a ROM dot-data word (DD0 through DD2) select one of eight horizontal positions for the dot within an eight-by-sixteen character matrix (see Figure 3-6). The next four bits (DD3 through DD6) define the vertical position of the dot within the matrix. These dot-data bits are applied to the Horizontal and Vertical Character DACs, where they are converted to the analog voltages used to position the dot on the crt.

The last dot-data bit DD7 is the $\overline{EOCH}$ (end of character) bit and, when LO, indicates that the last dot of the character is addressed. It is used to reset the Dot Counter (via U2855B) and enables the Character Counter to be incremented (via U2855A) after the last dot of a character has been displayed.

Two servicing jumpers, J401 and J402, have been provided to disable the Character ROM and force the DD7 bit ($\overline{EOCH}$) LO. In certain instances, these two conditions may be useful when troubleshooting the Readout circuitry. To prevent damage to the ROM output circuitry, J402 should only be installed after J401 is installed (to disable the ROM).

Dot Counter

The Dot Counter consists of two four-bit counters (both within U2870), OR-gate U2835A, inverter U2980D, and inverting input AND-gate U2855B. It sequences through a block of addresses containing dot-position data for a selected character. The Dot Counter is incremented when a dot is finished (via Inverter U2975A) by the $\overline{GETDOT}$ signal from the Dot Cycle Generator.

The counter increments through the block of dot-position data until the last byte of the block is encountered (last dot). This last data byte has the $\overline{EOCH}$ (end of character) bit (DD7) set LO. The dot is positioned and displayed in the normal manner, but when the $\overline{GETDOT}$ signal occurs for the next dot display cycle, the $\overline{EOCH}$ bit is latched into U2905 and generates the $\overline{EOCH1}$ (end of character, delayed one dot) signal at U2905 pin 15. With $\overline{EOCH}$ and $\overline{EOCH1}$ both LO, the HI reset pulse produced at pin 1 of NOR-gate U2855A resets the counter and, except for space characters, the $\overline{EOCH}$ bit returns HI. As the reset is removed from the Dot Counter, it is reenabled for display of the next character. For space characters, the $\overline{EOCH}$ bit will be detected as a LO when the first dot is read from the Character ROM, and the Character Counter will advance to the next character on the next rising edge of $\overline{GETDOT}$

Counter U2870 and OR-gate U2835D enable characters of more than 16 dots to be displayed. Since most of the readout characters are small, using 16 dots or less, efficient data storage is achieved by storing the dot-position data as 16 consecutive bytes. For displaying these smaller characters, the least significant four bits from U2870 are sufficient to address the 16 possible dot-position bytes.

When larger characters (up to 32 dots) are to be displayed, an additional bit of counter data must be used to address the ROM. This fifth bit comes from U2870 pin 11 and is ORed by U2835D with bit CD0 from the Character RAM. The block address for these larger characters always has bit CD0 set LO, so the counter bit from U2870 pin 11 is in control of the ROM address line at pin 7 of U2930. When displaying these larger characters, the dot count goes beyond 16 dots before the $\overline{EOCH}$ bit is set LO. On the seventeenth character, the fifth counter bit (pin 11 of U2870) will go HI to address the next 16-byte block of character data in ROM U2930. The lower four bits of the DOT Counter then sequence through this additional block in the normal manner until the $\overline{EOCH}$ bit is encountered, resetting the counter.

Horizontal DAC

The Horizontal DAC generates the voltages used to horizontally position dots of the readout display on the crt. Five data bits (CA0 through CA4) from the Character Counter stage position a character to the correct column in the display (32 possible columns across the crt), while three data bits from Character ROM U2930 (DD0 through DD2) horizontally position the dots within the eight-by-sixteen character matrix (see Figure 3-6).

The eight bits of position data are written to the permanently enabled DAC each time a new dot is requested by the Dot Cycle Generator. The $\overline{GETDOT}$ signal applied to pin 11 (Chip Select) enables the DAC to be written into, and the falling edge of the 5-MHz clock applied to pin 12 (Write) writes the data at the eight DAC input pins into an internal latch. The voltage at the DAC output pin changes to reflect the data present in the latch.

Vertical Character DAC

The function of Vertical Character DAC U2875A and U2905 is similar to that of the Horizontal DAC just described. It is responsible for vertically positioning each character dot on the crt. The Vertical DAC circuit is made up of seven, D-type flip-flops (contained within U2905 and U2875) and an accompanying resistor weighting network. The outputs of the flip-flops source different amounts of current to a summing node through a resistor weighting network.

The seven data bits are latched into U2875A and U2905 on the rising edge of the $\overline{GETDOT}$ signal. Two bits of character address data (CA5 and CA7) from the Character Counter switches the vertical display position between the four readout display lines. When the display is to be in the bottom line, bit CA5 is set LO. With CA5 LO, transistor Q2805 saturates pulling pin 3 of U2820 toward ground and a small current is sourced to the summing node via R2925. Vertical position above this reference is determined by dot data bits DD3 through DD6. When the top line is to be displayed, the CA5 bit is set HI, biasing Q2805 off and allowing pin 3 of U2820 to be pulled up to

+5 V through the resistor divider composed of R2928 and R2929. A larger current is now sourced into the summing node via R2925 and enough voltage is developed across R2926 to move the display to the top row of the crt. The CA7 bit is used to offset the top and bottom readout display lines to form the center two readout display lines. As before, the individual dots are then positioned above this reference level by dot data bits DD3 through DD6.

Mode Select Logic and Analog Channel Switch

The Mode Select Logic circuitry is composed of analog switches U2800 and U2805, buffers U2820B and C, gates U2810A, B, C, and D, U2900B and C, and part of U2905. It controls the readout display mode by selecting which deflection signals should drive the Horizontal and Vertical Deflection Amplifiers during a readout display. Five display modes are decoded by the Mode Select Logic: character display, vertical cursor 0, vertical cursor 1, horizontal cursor 0, and horizontal cursor 1.

For normal character displays, cursor select bit CA6 on U2800 pin 1 is LO. This LO signal passes through analog switch U2800 and is latched into U2905 when the $\overline{\text{GETDOT}}$ request from the Dot Cycle Generator goes HI. This latched LO selects the character display mode by forcing the outputs of U2900B and C and U2810A and B HI. The HI outputs of U2900B and C applied to the select input pins of analog switch U2805 cause the Horizontal DAC output signal applied to U2805 pin 11 to be routed to the Horizontal Amplifier (diagram 6) via buffer U2820B. The same HI logic levels cause NOR-gates U2810C and D to produce a LO at their outputs. This causes analog switch U2800 to route the Vertical DAC output signal applied to pin 12 to the Vertical Output Amplifier (also diagram 6) via buffer U2820A.

For cursor displays, cursor select bit CA6 goes HI. This HI is routed through analog switch U2800 and latched into U2905 when $\overline{\text{GETDOT}}$ next goes HI. This produces a HI at U2905 pin 16, enabling the Mode Select Logic to decode output bits DD3, DD4, and DD5 (from U2905) to determine which of the four possible cursor modes is selected (see Table 3-6). Once one of the cursor modes is entered, analog switch U2800 routes a fixed HI from pin 5, pin 2, or pin 4 to U2905 to keep the Mode Select Logic enabled. Character display mode is reentered only when return-to-character-mode data is decoded (DD4 and DD5 both LO). When that occurs, U2800 routes the CA6 bit to U2905 and, if the bit is LO, the cursor display mode is halted.

CURSOR DEVELOPMENT. Cursors are displayed in short sections, alternating between both vertical positions (for the delta voltage cursors) or both horizontal positions (for the delta time cursors). When displaying delta voltage cursors, the CURSOR 0 level is routed to the Vertical Amplifier by analog switch U2800. This level determines the vertical position of one of the voltage cursors. Horizontal-positioning voltages for one segment of the cursor are routed from Horizontal DAC through analog switch U2805 and buffer U2820B to horizontally position each of the dots making up the cursor segment. DLY REF 1 is then used to vertically position the second cursor, and the Horizontal DAC positions each of the dots for that cursor segment. The cycle is repeated until all segments of both cursors are displayed.

Table 3-6
Readout Display Mode Selection

Control Bits				Mode Selected	Horizontal Signal	Vertical Signal
CA6 (Cursor Select)	DD5	DD4	DD3			
L	X[a]	X	X	Character Display	Horiz DAC	Vert DAC
H	L	H	L	Vert Cursor 1	Horiz DAC	DLY REF 1
H	L	H	H	Horiz Cursor 1	DLY REF 1	Horiz DAC
H	H	L	L	Vert Cursor 0	Horiz DAC	CURSOR 0
H	H	L	H	Horiz Cursor 0	CURSOR 0	Horiz DAC
H	L	L	X	Return to character display Mode		

[a]X = State doesn't matter.

Delta time cursor displays are similar in that the CURSOR 0 and DLY REF 1 signals are used to position the cursors. In this case, however, analog switch U2805 selects the CURSOR 0 and DLY REF 1 signals alternately to position the cursors horizontally, and the Horizontal DAC output is routed via analog switch U2800 and buffer U2820C to vertically position the dots within each cursor segment.

Refresh Prioritizer

The Refresh Prioritizer circuitry consists of U2850A and B, U2950B, U2990A, and U2985. It keeps track of how well the Readout circuitry is doing in displaying all the required readout information and maintains the overall refresh rate. Since the readout display must remain flicker-free and at a constant intensity over the entire sweep rate range, various modes of displaying readout information are provided. The Refresh Prioritizer keeps track of the display status and enables the various readout-display modes as required to produce minimal interference with the displayed waveform trace(s).

Ideally, readout information should be displayed only when the oscilloscope is not trying to display waveform traces. These times occur before a trace commences, after a trace is completed, or between consecutive traces. Displaying in this mode corresponds to "priority one" in Figure 3-7 and causes no interference with the displayed waveforms. If the Readout circuitry is able to display all the required readout dots during the holdoff time between sweeps, the prioritizer U2985 will turn off the Dot Start Governor until the next subframe of readout information is to be displayed. When the sweep times are either too fast to finish a readout display during holdoff (at 5 ns per division no identifiable holdoff time exists) or too slow to allow flicker-free readout, readout display modes other than priority one are initiated.

The next most desirable time for dots to be displayed is during "triggerable" time: that time between sweeps when the oscilloscope is waiting for a sweep trigger event to occur. This is designated priority two and may cause slight interference on the leading edge of the displayed trace if a dot is being displayed when the actual trigger occurs.

Finally, the least desirable dot display time is during a waveform trace display. This display time is designated either priority three or priority four. (Priority four indicates a higher demand of display time.) In priorities three and four, dot displays occur during the main portion of the waveform display. However, the waveform blanking associated with these displays is relatively random in nature and is usually not noticeable.

To start a readout display, the ROSFRAME (readout subframe) request from the Timing Logic (diagram 1) clocks the Q output of flip-flop U2850A HI. ROSFRAME is a periodic clocking signal used to hold the overall refresh rate constant and occurs at regular intervals, regardless of the state of the display.

As the Dot Cycle Generator runs, it resets half of U2830 in the Dot Timer at somewhat irregular intervals with the STARTDOT signal (via inverter U2890A). The Dot Timer then starts a timing sequence, and the rising edge of the REFRESH signal from U2830 pin 4 clocks the latched ROSFRAME request from U2850A pin 5 to the Q output (pin 9) of flip-flop U2850B. This HI, applied to the S1 input (pin 10) of prioritizer U2985, sets it up to increment with the next REFRESH clock applied to its clock input (pin 11). The LO $\overline{Q}$ output of U2850B (pin 8) applied to the reset input of U2850A resets the latched ROSFRAME request. See Figure 3-8 for an illustration of the timing sequence involved.

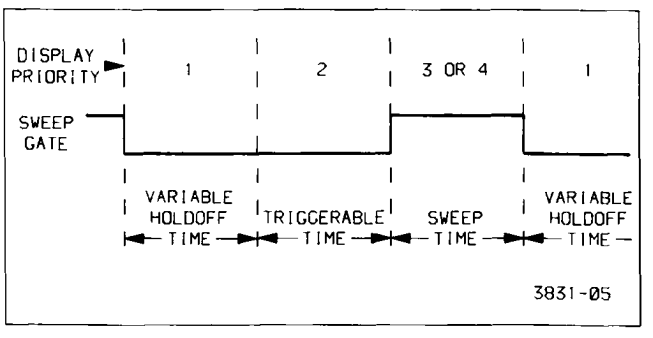

Figure 3-7. Readout display priorities.

Table 3-7
Operation of Prioritizer Shift Register

Select Inputs		Mode
S0	S1	
H	H	Parallel Load
H	L	L → Q_A (decrease priority)
L	H	H → Q_D (increase priority)
L	L	Hold Data

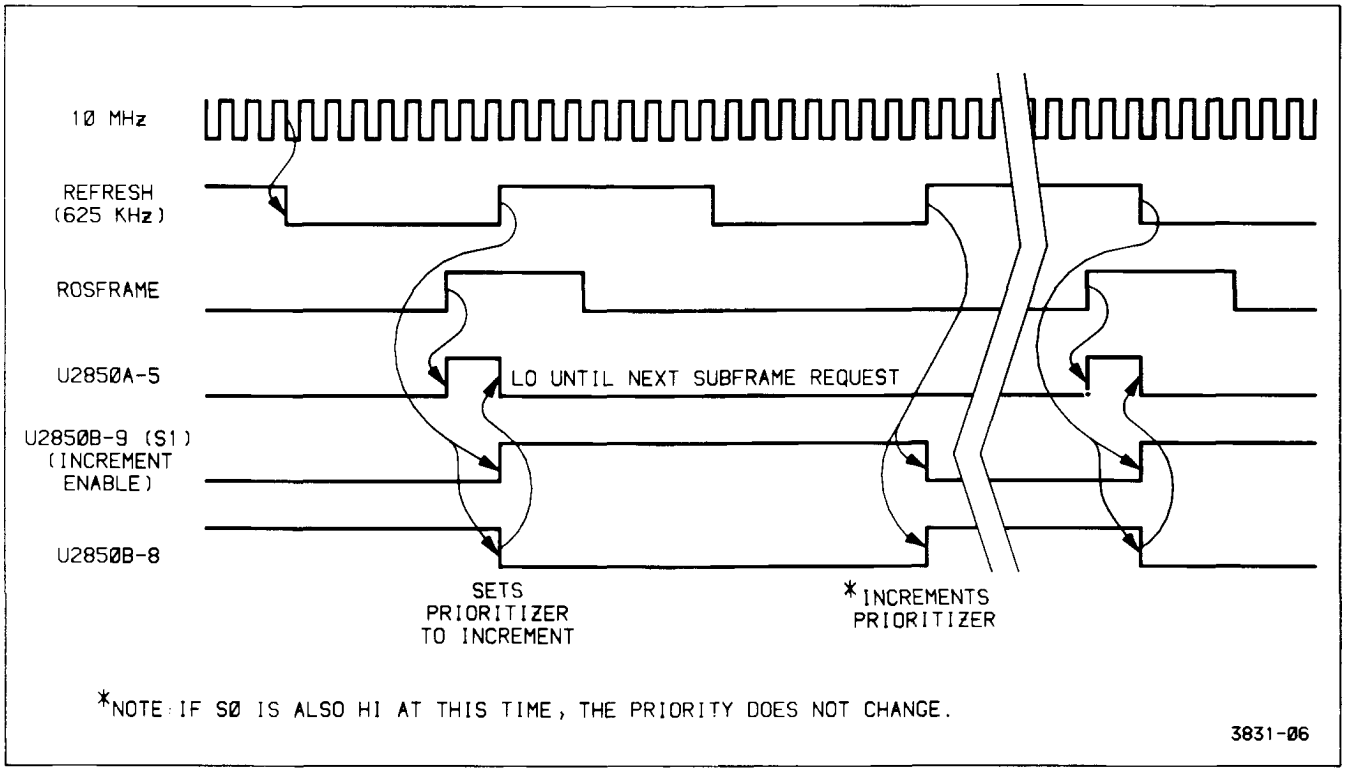

Figure 3-8. Timing of Refresh Prioritizer.

The next REFRESH clock increments the display priority to one by clocking a HI to the Q_D output (pin 12) of prioritizer shift register U2985. (Table 3-7 illustrates the operation of U2985.) The same clock latches the now LO ROSFRAME request at U2850B pin 12 to the Q output (pin 9), where it is applied to the S1 input (pin 10) of prioritizer U2985. The LO on the S1 input of the prioritizer will remain until another ROSFRAME request from the Timing Logic occurs, and the encoded priority at the output pins of U2985 will remain as it is presently set.

As each of the consecutive dots of the readout frame are displayed, the Dot and Character Counters increment until all dots of the subframe have been displayed (eight characters). As the Character Counter increments to address the next character of the display (first character of the next frame), the fourth bit of counter U2940 goes HI and sets the S0 input (pin 9) of prioritizer U2985 HI via exclusive-OR-gate U2990A. The Dot Timer then clocks the prioritizer with a REFRESH clock on pin 11 of U2985, and the priority is decremented back to zero (indicating that the subframe is completed). The next ROSFRAME request starts the process over again to display the next subframe of readout display. The sequence just described is the priority one display mode and is used when holdoff time between sweeps allows all dots of the subframe to be displayed before the next ROSFRAME request occurs.

If a second ROSFRAME request occurs before the Character Counter indicates the end of the subframe (to decrement the prioritizer back to zero), input S1 of U2985 will be set HI (while the S0 input pin remains LO) and the Prioritizer will increment to priority two (outputs Q_C and Q_D go HI) on the next STARTDOT cycle. If this display priority still is inadequate to complete the subframe display before the next ROSFRAME request occurs, priority two will be incremented up to priority three, or even to priority four should the condition persist. Priority four is operationally the same as priority three, but it is used to keep the readout circuitry continuously displaying readout data on through the next subframe, thus allowing the display to catch up. If priority four is in effect, the next decrement that occurs at the end of a subframe only returns the prioritizer to priority three, not to priority two.

The circuit composed of flip-flop U2950B and exclusive-OR-gate U2990A enables either edge of the CA3 bit to decrement the priority of the display when a subframe is completed. Either a negative or positive transition on pin 2 of U2990A will cause the output at pin 3 go HI since the Q output of U2950B is still at the opposite level. The HI from U2990A indicates that the end of the present subframe has occurred, and it sets up the prioritizer to decrement with the next REFRESH clock. At the same time that the prioritizer decrements, the changed level of the CA3 bit is clocked through U2950B and causes the output of exclusive-OR-gate U2990A to return LO until the next subframe is completed.

If the subframe is completed (S0 on U2985 goes HI) when a ROSFRAME request is also pending (S1 is also HI), U2985 does a parallel load, reloading the present priority back into the prioritizer. Since, in this case, the subframe display was completed at the same rate as the ROSFRAME request occurred, the readout display priority is not changed.

Dot Start Governor

The Dot Start Governor detects the display priority from the Refresh Prioritizer and initiates dot-display cycles as the appropriate conditions are met. The conditions tested include display priority, sweep gate completion, dot completion, readout control status, and the readout active enable from the Display Sequencer.

When the readout board status line (ACTIVE/ $\overline{\text{ADDRESSABLE}}$) is HI (signifying display) and the REST line goes HI to indicate that the dot cycle is complete, NAND-gates U2890C and D generates a HI at pin 11 (DOTOK) to signal that a new dot display is allowed. The HI from U2890C and D enables most of the gating in the Dot Start Governor. If the Refresh Prioritizer has encoded a display priority of either one or two, the output of exclusive-OR-gate U2990B is HI. When DOTOK from U2890C and D goes HI to enable a dot display, the LO reset from pin 8 of U2970C and D to pin 1 of flip-flop U2880 is removed. Now, when the A Sweep gate ($\overline{\text{SGA}}$) goes HI (beginning of Holdoff), the HI at the D input of U2880B is clocked to the Q output and the $\overline{\text{Q}}$ output at pin 8 will go LO, requesting display of a priority one or two dot. This LO dot request is propagated through U2885C, U2965C and D, and U2890B and sets the STARTDOT signal LO. STARTDOT going LO resets Dot Cycle Generator shift register U2995 and counter U2830B of the Dot Timer. Resetting the Dot Cycle Generator shift register causes the REST signal from U2995 pin 13 to go to a LO, removing the HI DOTOK signal at U2890 pin 11. As DOTOK goes LO, STARTDOT at pin 8 of U2890B goes HI to start the DOT Cycle Generator. At the same time the reset to U2880B is asserted via U2970C and D and the dot request is removed. Both the Dot Timer and the Dot Cycle Generator are now enabled and start the first dot-display cycle during holdoff time.

After the Display Sequencer U650 (diagram 5) has time to respond to the end of the sweep gate, it sets the readout active signal ($\overline{\text{ROA}}$) to pin 10 of U2880B LO. This sets pin 9 of U2885C LO, and the signal is propagated through U2885C, U2965C and D, and U2890B, as before, resetting the Dot Timer and the Dot Cycle Generator. REST then goes LO as before and starts the Dot Cycle Generator and Dot Timer. This cycle continues, displaying one dot per cycle (except for the first non-displayed dot of a character which is automatically initiated by $\overline{\text{EOCH2}}$, until the Display Sequencer determines that the readout time is over (sets $\overline{\text{ROA}}$ HI) or until the display priority is decremented to zero.

When a display priority of three or four exists, the output of U2990B will be LO, and U2970C and D, U2880B, and the associated logic gates following it will not be able to initiate a dot cycle. In either of these display priorities, U2970A and B, U2835C, U2965A and B, and flip-flop U2950A detect the higher priority and generate a readout request signal ($\overline{\text{ROR}}$) to the Display Sequencer. The LO from U2950A pin 6 propagates through U2965C and U2890B to initiate a STARTDOT cycle. When the Display Sequencer recognizes that the readout request signal is LO, it will perform the mode-dependent setup functions necessary to give display control to the Readout Board and will then set the $\overline{\text{ROA}}$ (readout active) line LO. The LO will be clocked into U2880B, and the Dot Cycle Generator will generate a $\overline{\text{GETDOT}}$ signal, resetting the readout request from flip-flop U2950B. Only one dot is displayed for each readout request.

A similar readout display request will be generated when priority-two-or-higher displays are required when sweep gates are not present (dot display during triggerable time after holdoff). This condition is detected by NAND-gate U2885A. NAND-gates U2970A and B allows a readout request to be generated when in the interfere mode. This mode is always invoked in 2467B instruments and invoked only during a single-sequence waveform display in 2465B instruments and ensures that all of the selected sweep combinations are displayed once, followed by a complete readout frame (for the purpose of crt photography).

Dot Cycle Generator

The Dot Cycle Generator, composed of shift register U2995, flip-flop U2880A, and associated gating circuitry, generates time-related signals for the following purposes: unblanking the crt to display a dot; requesting the next byte of dot data in preparation for displaying the next dot; and reenabling itself to repeat the tasks, via the Dot Start Governor (dependent on the display priority).

The timing relationships of the Dot Cycle Generator output signals are controlled by shift register U2995. When the Dot Start Governor initiates a STARTDOT cycle as previously described, the STARTDOT signal initially goes LO, resetting all the Q outputs of U2995 LO and setting the Q output of flip-flop U2880A to a HI. The STARTDOT signal is then returned HI, and the Dot Timer counter U2830 and shift register U2995 are enabled. The shift register begins to consecutively shift HI logic levels to its Q output pins with each 5-MHz clock from the Dot Timer. After approximately 400 ns, pin 5 (Q_C) of the shift register will go HI. The HI at Q_C propagates through exclusive-OR-gate U2990D and NAND-gates U2980A and D to unblank the crt by setting the readout blanking signal ($\overline{\text{ROB}}$) HI.

When the Q_F output of U2995 goes HI (1 μs after STARTDOT), the output of U2990D goes LO and the output of U2990C goes HI. The LO from U2990D propagates through U2980A and D to blank the crt ($\overline{ROB}$ goes LO) and to clock flip-flop U2880A via NAND-gate U2980B. The $\overline{ROA}$ (readout active) level from the Display Sequencer (diagram 5) is clocked from the D input (pin 2) of U2880A to the Q output; and, if LO (indicating that the readout circuitry had control of the crt when unblanking occurred; thus the dot was displayed), the output of U2980C is set HI. With three HI levels applied to NAND-gate U2885A, a $\overline{GETDOT}$ request is generated to get the next byte of dot-position data for display. The next 5-MHz clock sets the Q_G output of U2995 HI, and the output of U2990C goes LO, removing the LO $\overline{GETDOT}$ signal.

At 1.4 μs after STARTDOT goes HI, U2995 pin 13 (Q_H) goes HI to produce the REST signal, indicating that the current dot cycle is complete and the Dot Cycle Generator is at REST. If the readout ACTIVE/ $\overline{ADDRESSABLE}$ mode bit at U2980C pin 10 is still HI, the REST signal going HI produces a HI DOTOK signal (next dot is allowed) at pin 11 of U2890D. This HI applied to pin 4 of U2890B, along with any of the possible dot requests from the Dot Start Governor, will initiate another STARTDOT cycle for the next dot of the display. As long as the Display Sequencer holds the readout active line ($\overline{ROA}$) LO, U2885B, U2965C and D of the Dot Start Governor will automatically initiate dot cycles as soon as the previous one ends (REST goes HI), until the Refresh Prioritizer is decremented to zero.

When the last dot of the character is called from the Character ROM, the $\overline{EOCH}$ bit (DD7) applied to latch U2905 at pin 18 (in the Vertical Character DAC circuitry) is LO. At the end of that dot display cycle, the $\overline{GETDOT}$ signal (going HI) clocks the LO $\overline{EOCH}$ bit into latch U2905 and increments character counter U2940. The latched bit becomes the $\overline{EOCH1}$ signal (end of character, delayed one dot request) and is applied to U2855A, along with the already LO $\overline{EOCH}$ bit, to reset Dot Counter U2870. The least-significant bits to the Character ROM address pins (A0 through A4) are then zeros, and the first dot of the next character is addressed. The Horizontal and Vertical DACs don't write this first dot position data into their registers until the end of the next $\overline{GETDOT}$ signal. That same $\overline{GETDOT}$ signal also clocks $\overline{EOCH1}$ into U2905 which becomes $\overline{EOCH2}$ at pin 16 (end of character, delayed by two dot requests). $\overline{EOCH2}$ is applied to NAND-gate U2980D and disables the gate prior to the time the Dot Cycle Generator attempts to unblank the crt for the first dot display; thus the first dot of a character is never displayed.

Disabling the unblanking path for the first dot of each character in the manner just described allows the more radical voltage changes between characters to settle before the actual display of the next character begins. When the dot data for one of these undisplayed dots also has the $\overline{EOCH}$ bit set LO, it is a space character, and the display is advanced to the next character.

Dot Timer

The Dot Timer, composed of U2890A and U2830, generates three, time-related signals used to synchronize the display and maintain the proper sequencing of the individual character dots.

The two least-significant bits of the Dot Timer, from U2830 pins 11 and 10, are reset at the beginning of a dot cycle by a LO STARTDOT signal applied to the reset input of the counter via U2890A. As the dot-display cycle begins, the STARTDOT signal returns HI and the Dot Timer begins counting in a binary fashion. The 10-MHz clock applied to pin 13 is divided by two to produce the 5-MHz clocking signal at output pin 11. The 5-MHz clock sequences the Dot Cycle Generator through the various phases of the dot-display cycle. The REFRESH output signal from U2830 pin 4 updates the Refresh Prioritizer as each subframe is displayed.

A third clock, from U2830 pin 6, occurs at approximately 8-μs intervals and allows any pending dot requests to generate a $\overline{ROR}$ signal to the Display Sequencer via flip-flop U2950B. (Readout request generation is described in the Dot Start Governor discussion.)

HIGH VOLTAGE POWER SUPPLY AND CRT FOR 2465B ONLY

The High-Voltage Supply and CRT circuit (diagram 8) provides the voltage levels and control circuitry for operation of the cathode-ray tube (crt). The circuitry consists of the High Voltage Oscillator, the High Voltage Regulator, the Cathode Supply, the Anode Multiplier, the DC Restorer, Focus Amplifiers, the CRT and the various CRT Control circuits.

High-Voltage Oscillator

The High-Voltage Oscillator transforms power obtained from the −15 volt unregulated supply to the various ac levels necessary for the operation of the crt circuitry. The circuit consists of transformer T1970, switching transistor Q1981, and associated circuitry. The low-voltage oscillations set up in the primary winding of T1970 are raised by transformer action to high-voltage levels in the secondary windings. These ac secondary voltages are applied to the DC Restorer, the Cathode Supply, and the anode multiplier circuits.

Oscillation occurs due to the positive feedback from the primary winding (pin 4 to pin 5) to the smaller base-drive winding (pin 3 to pin 6) for transistor Q1981. The frequency of oscillation is about 50 kHz, and is determined primarily by the resonant frequency of the transformer.

When power is first applied, the High-Voltage Regulator circuit detects that the negative crt cathode voltage is too positive and pulls pin 2 of transformer T1970 negative. The negative level forward biases transistor Q1981 via the base-drive winding of the transformer. Current begins to flow in the primary winding through transistor Q1981, inducing a magnetic field around the transformer primary winding. The increasing magnetic field induces a current in the base-drive winding that further increases the base drive to the transistor. This in-phase feedback causes current in Q1981 to increase until the primary winding current reaches its maximum value. As the rate of change of the primary current peaks and then reverses, the induced magnetic field begins to decay. This decreases the base-drive current and begins turning Q1981 off.

As Q1981 is beginning to turn off, the magnetic field around the primary winding continues to collapse at the resonant frequency rate of the transformer. This induces into the base-drive winding a voltage that completely turns off the transistor. The collapsing magnetic field goes to zero, then builds in the opposite direction to a maximum before collapsing again (resonant flywheel effect). This sequence of events occurs repetitively as the circuit continues to oscillate.

The oscillating magnetic field in the primary winding couples power into the secondary windings of the transformer. The amplitude of the voltages induced in the secondary windings is a function of the turns ratios of the transformer windings.

High-Voltage Regulator

The High-Voltage Regulator consists of U1956A and B and associated components. It monitors the crt Cathode Supply voltage and varies the bias point of the switching transistor in the High Voltage Oscillator to hold the Cathode Supply voltage at the nominal level. Since the output voltages at the other secondary winding taps are related by turns ratios to the Cathode Supply voltage, all voltages are held in regulation.

When the Cathode Supply voltage is at the proper level (−1900 V), the current through R1945 and the 19-MΩ resistor internal to High Voltage Module U1830 holds the voltage developed across C1932 at zero volts. This is the balanced condition and sets base drive in Q1981 via integrator U1956A and voltage-follower U1956B. Varying base drive to Q1981 holds the secondary voltages in regulation.

If the Cathode Supply voltage level tends too positive, a slightly positive voltage will develop across C1932. This voltage causes the outputs of integrator U1956A and voltage-follower U1956B to move negative. The negative shift charges capacitor C1951 to a different level, around which the induced feedback voltage at the base-drive winding will swing. The added negative bias causes Q1981 to turn on earlier in the oscillation cycle, and a stronger current pulse is induced in the secondary windings. The increased power in the secondary windings increases the secondary voltages until the Cathode Supply voltage returns to the balanced condition (zero volts across C1932). Opposite action occurs should the Cathode Supply voltage tend too negative.

Cathode Supply

The Cathode Supply circuit is composed of a voltage-doubler and an RC filter network contained within High-Voltage Module U1830. This supply produces the −1900 V accelerating potential applied to the CRT cathode and the −900 V slot lens voltage. The −1900 V supply is monitored by the High Voltage Regulator to maintain the regulation of all voltages from the High Voltage Oscillator.

The alternating voltage (950 V peak) from pin 10 of transformer T1970 is applied to a conventional voltage-doubler circuit at pin 7 of the High Voltage Module. On the positive half cycle, the input capacitor of the voltage doubler (0.006 μf) is charged to −950 V through the forward-biased diode connected to ground at pin 9 of the module (charging path is through the diode, so stored charge is negative). The following negative half cycle adds its ac component (−950 V peak) to this stored dc value and produces a total peak voltage of −1900 V across the capacitor. This charges the 0.006-μf storage capacitor (connected across the two doubler diodes) through the second diode (now the forward-biased diode) to −1900 V. Two RC filters follow the voltage doubler to smooth out the ac ripple. A resistive voltage divider across the output of the filter network provides the −900-V slot lens potential.

Anode Multiplier

The Anode Multiplier circuit (also contained in High Voltage Module U1830) uses voltage multiplication to produce the +14 kV CRT anode potential. Circuit operation is similar to that of the voltage-doubler circuit of the Cathode Supply.

The first negative half-cycle charges the 0.001-μf input capacitor (connected to pin 8 of the High Voltage Module) to a positive peak value of +2.33 kV. The following positive half cycle adds its positive peak amplitude to the voltage stored on the input capacitor and boosts the charge on the second capacitor of the multiplier (and those following) to +4.66 kV. Following cycles continue to boost up

succeeding capacitors to values 2.33 kV higher than the preceding capacitor until all six capacitors are fully charged. This places the output of the last capacitor in the multiplier at +14 kV above ground potential. Once the multiplier reaches operating potential, succeeding cycles replenish current drawn from the Anode Multiplier by the crt beam. The 1-MΩ resistor in series with the output protects the multiplier by limiting the anode current to a safe value.

Focus Amplifier

The Focus Amplifier, in conjunction with the auto-focus circuitry of Z-Axis hybrid U950 (diagram 6), provides optimum focus of the crt beam for all settings of the front-panel INTENSITY control. The Focus Amplifier itself consists of two shunt-feedback amplifiers composed of Q1851, Q1852, and associated components. The outputs of the amplifiers set the operating points of a horizontally converging quadrapole lens and a vertically converging quadrapole lens within the crt. The convergence strength of each lens is dependent on the electric field set up between the lens elements.

Since the bases of Q1851 and Q1852 are held at constant voltages (set by their emitter potentials), changing the position of the wiper arms of the ASTIG and FOCUS pots changes the amount of current sourced to the base junctions through R1856 and R1857 respectively. This changes the base-drive currents and produces different output levels from the Focus Amplifiers; that, in turn, changes the convergence characteristics of the quadrapole lenses.

Initially, at the time of adjustment, the FOCUS and ASTIG potentiometers are set for optimum focus of the crt beam at low intensity. After that initial adjustment, the ASTIG pot normally remains as set, and the FOCUS control is positioned by the user as required when viewing the displays. When using the FOCUS control, transistor Q1852 is controlled as described above; however, an additional current is also supplied to the base node of Q1851 from the FOCUS pot through R1855. This additional current varies the base-drive current to Q1851 and provides tracking between the two lenses as the FOCUS control is adjusted during use of the instrument.

The convergence strengths of the quadrapole lenses also dynamically track changes in the display intensity. The VQ OUT signal, applied to the crt at pins 5 and 6, is exponentially related to the VZ OUT (intensity) signal driving the crt control grid and increases the strength of the lenses more at higher crt beam currents. (A higher beam current requires a stronger lens to cause an equal convergence of the beam.)

DC Restorer

The DC Restorer provides crt control-grid bias and couples both the dc and the low-frequency components of the Z-Axis drive signal to the crt control grid. This circuit allows the Z-Axis Amplifier to control the display intensity by coupling the low-voltage Z-Axis drive signal (VZ OUT) to the elevated crt control-grid potential (about −1.9 kV).

The DC Restorer circuit (Figure 3-9) operates by impressing the crt grid bias setting and the Z-Axis drive signal on an ac voltage waveform. The shaped ac waveform is then coupled to the crt control grid through a coupling capacitor that restores the dc components of the signal.

GRID BIAS LEVEL. An ac drive voltage of approximately 300 V peak-to-peak is applied to the DC Restorer circuit from pin 7 of transformer T1970. The negative half cycle of the sinusoidal waveform is clipped by CR1953, and the positive half cycle (150 V peak) is applied to the junction of CR1930, CR1950, and R1941 via R1950 and R1953. Transistor Q1980, operational amplifier U1890A, and associated components form a voltage clamp circuit that limits the positive swing of the ac waveform at the junction.

Transistor Q1980 is configured as a shunt-feedback amplifier, with C1991 and R1994 as the feedback elements. The feedback current through R1994 develops a voltage across the resistor that is positive with respect to the +42.6 V on the base of the transistor. The value of this additive voltage plus the diode drop across CR1950 sets the upper clamping threshold. Grid Bias potentiometer R1878 sinks varying amounts of current away from the base node of the transistor and thus sets the feedback current through R1994. The adjustment range of the pot can set the nominal clamping level between +71 V and +133 V.

When the amplitude of the ac waveform is below the clamping threshold, series diode CR1950 will be reverse biased and the ac waveform is not clamped. During the time the diode is reverse biased, transistor Q1980 is kept biased in the active region by the charge retained on C1971 from the previous cycle. As the amplitude of the ac waveform at the junction of CR1930 and CR1950 exceeds the voltage at the collector of Q1980, diode CR1950 becomes forward biased, and the ac waveform is clamped at that level. Any current greater than that required to maintain the clamp voltage will be shunted to the +42 V supply by transistor Q1980.

Operational amplifier U1890A sinks a time-dependent variable current away from the base node of Q1980 that modifies the crt control-grid bias during the first few minutes of instrument operation. The circuit compensates for the changing drive characteristics of the crt as it warms up.

At power-up, capacitor C1990 begins charging through R1991 toward the +15 V supply. The output of U1890A follows the rising voltage on pin 3; and after about ten minutes (for all practical purposes), it reaches +15 V. As the output voltage slowly increases, the charging current through R1992 causes the Grid Bias voltage to gradually lower about ten volts from its power-on level. The charge on C1990 dissipates slowly; therefore, if instrument power is turned off and then immediately back on again, the output of U1890A will still be near the +15 V limit rather than starting at zero volts as when the crt was cold.

Z-AXIS DRIVE LEVEL. The variable-level Z-Axis signal (VZ OUT) establishes the lower clamping level of the ac waveform applied to the High Voltage Module. When the amplitude of the waveform drops below the Z-Axis signal, CR1930 becomes forward biased, and the ac waveform is clamped to the Z-Axis signal level. The VZ OUT level may vary between +8 V and +75 V, depending on the setting of the front-panel INTENSITY and READOUT INTENSITY controls.

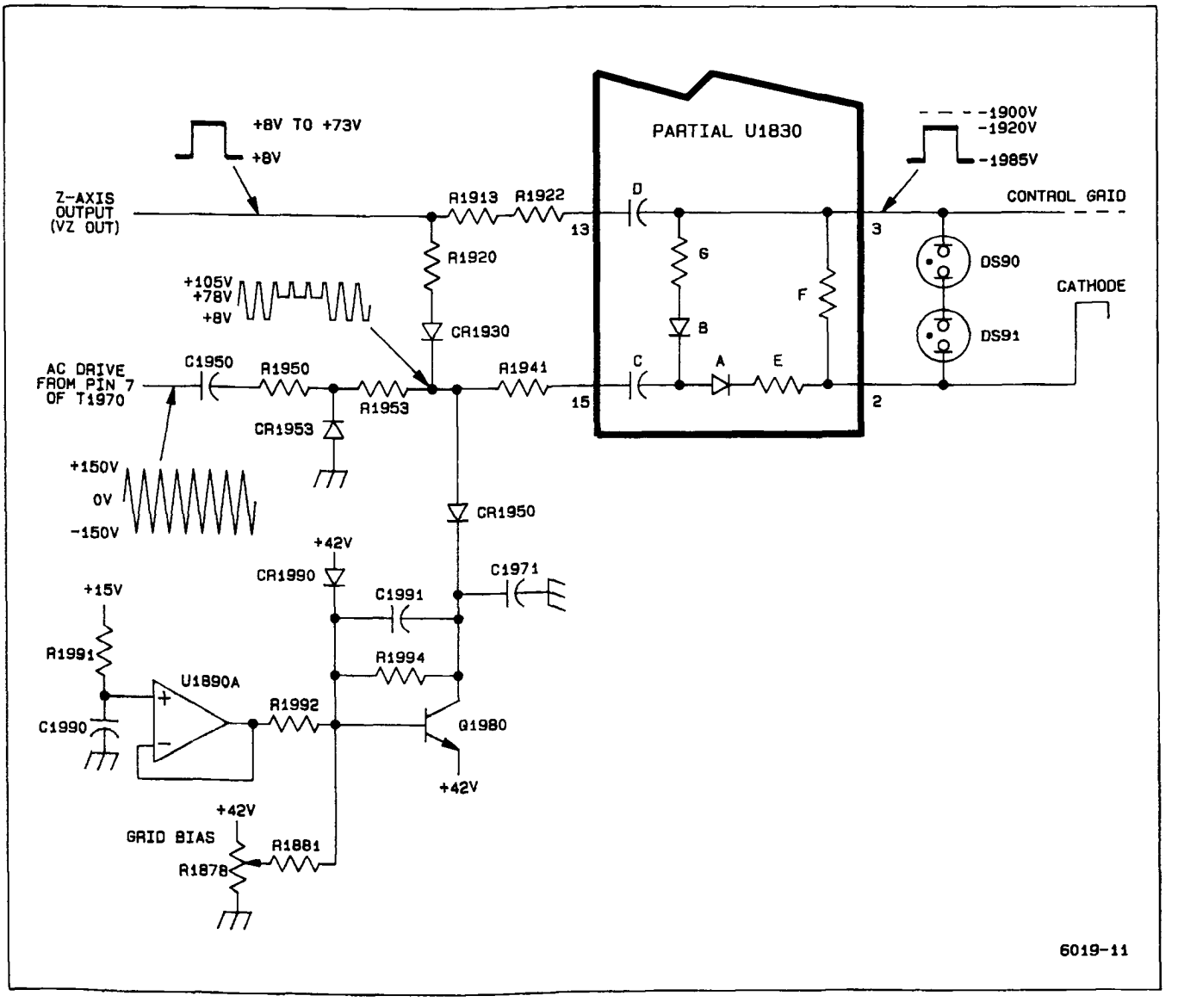

Figure 3-9. Dc restorer circuit (2465B only).

The ac waveform, now carrying both the grid-bias information and the Z-Axis drive information, is applied to a DC Restorer circuit in the High Voltage Module where it is raised to the high-voltage levels of the crt control grid.

DC RESTORATION. The DC Restorer circuit in the High Voltage Module is referenced to the crt cathode voltage via a connection within U1830. Capacitor C (in Figure 3-9), connected to pin 15 of U1830, initially charges to a level determined by the difference between the Z-Axis signal level and the crt cathode potential. The Z-Axis signal sets the level on the positive plate of capacitor C through R1920, CR1930, and R1941; the level on the negative plate is set by the crt cathode voltage through resistor E and diode A. Capacitor D is charged to a similar dc level through resistors F, R1922, and R1913.

When the ac waveform applied to pin 15 begins its transition from the lower clamped level (set by the Z-Axis signal) towards the upper clamped level (set by the Grid Bias potentiometer), the charge on capacitor C increases. The additional charge is proportional to the voltage difference between the two clamped voltage levels.

When the ac waveform begins its transition from the upper clamped level back to the lower clamped level, diode A becomes reverse biased. Diode B becomes forward biased, and an additional charge proportional to the negative excursion of the ac waveform (difference between the upper clamped level and the lower clamped level) is added to capacitor D through diode B and resistor G. The amount of change added to capacitor D depends on the setting of the front-panel INTENSITY control, as it sets the lower clamping level of the ac waveform. This added charge determines the potential of the control grid with respect to the crt cathode.

The potential difference between the control grid and the cathode controls the beam current and thus the display intensity. With no Z-Axis signal applied (INTENSITY control off), capacitor D will be charged to its maximum negative value, since the difference between the two clamped voltage levels is at its maximum value. This is the minimum intensity condition and reflects the setting of the Grid Bias potentiometer. During calibration, the Grid Bias pot is adjusted so that the difference between the upper clamping level (set by the Grid Bias pot) and the "no signal" level of the Z-Axis drive signal (VZ OUT) produces a control grid bias that barely shuts off the crt electron beam.

As the INTENSITY control is advanced, the amplitude of the square-wave Z-Axis signal increases accordingly. This increased signal amplitude decreases the difference between the upper and lower clamped levels of the ac waveform, and less charge is added to capacitor D. The decreased voltage across capacitor D decreases the potential difference between the control grid and the cathode, and more crt beam current is allowed to flow. Increased beam current increases the crt display intensity.

During the periods that capacitor C is charging and discharging, the control-grid voltage is held stable by the long-time-constant discharge path of capacitor D through resistor F. Any charge removed from capacitor D during the positive transitions of the ac waveform will be replaced on the negative transitions.

The fast-rise and fast-fall transitions of the Z-Axis signal are coupled to the crt control grid through capacitor D. This ac-coupled fast-path signal quickly sends the crt electron beam to the new intensity level, then the slower DC Restorer path "catches up" to handle the dc and low-frequency components of the Z-Axis drive signal.

Neon lamps DS90 and DS91 prevent arcing inside the crt should the control grid potential or cathode potential be lost for any reason.

CRT Control Circuits

The CRT Control circuits provide the various potentials and signal attenuation factors that set up the electrical elements of the crt. The control circuitry is divided into two separate categories: (1) level setting and (2) signal handling. The level setting circuitry produces voltages and current level necessary for the crt to operate, while the signal-handling portion is associated with changing crt signal levels.

LEVEL-SETTING CIRCUITRY. Operational amplifier U1890B, transistor Q1980, and associated components form an edge-focus circuit that sets the voltages on the elements of the third quadrapole lens. The positive lens element is set to its operating potential by Edge Focus adjustment pot R1864 (via R1897). This voltage is also divided by R1893 and R1982 and applied to the non-inverting input of U1890B to control the voltage on the other element of the lens.

The operational amplifier and transistor are configured as a feedback amplifier, with R1891 and R1990 setting the stage gain. Gain of the amplifier is equal to the attenuation factor of divider network R1893 and R1892, so total overall gain of the stage from the wiper of R1864 to the collector of Q1890 is unity. The offset voltage between lens elements is set by the ratio of R1891 and R1990 and the +10 V reference applied to R1990. This configuration causes the two voltages applied to the third quadrapole lens to track each other over the entire range of Edge Focus adjustment pot R1864.

Other adjustable level-setting circuits include Y-Axis Alignment pot R1848, used to rotate the beam alignment after vertical deflection. This adjustment controls the amount of current through the Y-Axis Alignment coil around the neck of the crt and is set to produce precise perpendicular alignment between x- and y-axis deflections. The TRACE ROTATION adjustment R975 is a front-panel screwdriver-adjustable control. The effect of the adjustment is similar to the Y-Axis Alignment pot, but when adjusted, it rotates both the x-axis and the y-axis deflections of the trace on the face of the crt. A final adjustable level-setting control is the Geometry pot R1870, adjusted to optimize display geometry. The potential at pin 8 for the vertical shield internal to the crt is produced by zener diode VR1891 and associated components.

SIGNAL-HANDLING CIRCUITRY. The crt termination adjustment R1501 is set to match the loading characteristics of the crt's vertical deflection structure to the Vertical Output Amplifier.

HIGH VOLTAGE POWER SUPPLY AND MCP-CRT FOR 2467B ONLY

The High-Voltage Supply and CRT circuit, diagram <8> 2467B, provides to the MCP-CRT (Micro-Channel Plate Cathode-Ray-Tube) the high voltage levels and necessary control circuitry for proper operation. The MCP-CRT produces high brightness on low rep-rate transient waveforms while limiting the brightness of high-rep rate waveforms.

The circuitry consists of the 2467B MCP-Cathode Ray Tube, MCP Bias Supply, High Voltage Oscillator, the Cathode Supply, the High Voltage Regulator, the DC Restorer, the Anode Current Limiter and Multiplier, the Focus Circuitry, and the various CRT Control circuits.

2467B MCP-CRT

The MCP-CRT has a Micro-Channel Plate element added between the PDD Lens and CRT Screen to multiply electrons, therefore boosting CRT performance. A low bias voltage across this element causes the electron multiplication to be low. Raising the bias voltage across the Micro-Channel Plate increases the multiplication of electrons going through the MCP. This higher bias voltage increases the MCP-CRT viewable writing rate a thousand times over a conventional crt. Full intensity drive to the MCP-CRT increases both the cathode current and the bias voltage across the MCP electron multiplier.

MCP-Bias Supply

The MCP-Bias Supply provides a variable bias voltage across the MCP (Micro-Channel Plate) element of the CRT. The MCP Bias Supply voltage is set by Intensity control information (DIR input voltage) and MCP Bias control R4365. As the Intensity control voltage is increased from minimum to maximum the MCP Bias Supply also increases from minimum to maximum. When the DIR input is between 0 to +2.5 V the MCP Bias stays at its minimum voltage. When the DIR input is varied between +2.5 V to +5 V maximum the MCP Bias voltage linearly follows the DIR input voltage and increases by about 400 V.

MCP-BIAS-SUPPLY VOLTAGE REGULATOR. The MCP-Bias-Supply Voltage Regulator consists of non-inverting operational amplifier U4367B and associated components. The regulator monitors the MCP-Bias-Supply output voltage at Test Point 4301 and varies the bias point of switching transistor Q4460 to hold the MCP-Bias-Supply DC voltage in regulation.

When the MCP-Bias-Supply output voltage is at the proper level, the sum of the currents through R4377 (MCP Bias), R4378 (intensity control, DIR), and R4380 (feedback resistor) hold the voltage developed across C4377 at zero volts. This balance condition sets base drive to Q4460 via regulator U4367B. Varying the base drive to Q4460 holds the rectified and filtered secondary voltage in regulation.

If the MCP-Bias-Supply output voltage level (T4480 pin 14) is too negative, a slightly negative voltage will develop across C4377. This voltage causes the output of regulator U4367B to move negative. The negative shift charges capacitor C4470 to a different level, around which the induced feedback voltage at the base-drive winding will swing. The added negative bias causes Q4460 to turn on earlier in the oscillation cycle, causing a stronger induced current pulse in the secondary winding. The increased current in the secondary winding increases (makes less negative) the secondary voltage (T4480 pin 14) until the MCP-Bias-Supply output voltage returns to the balanced condition (zero volts across C4377). Opposite action occurs if the MCP-Bias-Supply output voltage is too positive.

Intensity of the MCP Bias Supply is controlled by U4367A and associated components. Operational amplifier integrator U4367A has a DC gain of −4. The input is offset through R4461 to cause the Output voltage to be Zero volts when the DIR input is at +2.5 Volts (output range is ±10 V). Only the negative voltage out of U4367A, through CR4374 and R4378, changes the input current to regulator U4367B. This negative voltage is amplified and inverted by regulator U4367B, oscillator Q4460, and transformer T4460, increasing the MCP-Bias supply output voltage up to 400 Volts.

MCP-BIAS-SUPPLY OSCILLATOR. The MCP-Bias-Supply Oscillator transforms power obtained from the −15 volt unregulated supply to the voltage necessary to bias the MCP-CRT element of the crt. The circuit consists of transformer T4480, transistor Q4460, and associated components. The low-voltage oscillations in the primary winding of T4480 are raised by transformer action to a high-voltage in the secondary winding. This ac secondary voltage is half-wave rectified by CR4490, filtered by C4390, and then applied across the MCP.

Oscillation occurs due to the positive feedback from the primary winding (pin 3 to pin 4) to the smaller base-drive winding (pin 2 to pin 5) for transistor Q4460. The frequency of oscillation is about 86 kHz, and is determined primarily by the resonant frequency of transformer T4480.

Initially, when power is applied, the MCP-BIAS-voltage regulator circuit detects that the MCP voltage is too low and pulls pin 2 of transformer T4480 negative. The negative level is applied to transistor Q4460 through the transformer base-drive winding and forward biases it. Current begins to flow in the primary winding through the transistor collector-to-emitter circuit and induces a magnetic field around the transformer primary winding. The increasing magnetic field induces a current in the base-drive winding that further increases the base drive to the transistor. This in-phase feedback causes current in Q4460 to increase until the primary winding current reaches its maximum value. As the rate of change of the primary current peaks and then reverses, the induced magnetic field begins to decay. This decreases the base-drive current and begins turning Q4460 off.

As Q4460 is starting to turn off, the magnetic field around the primary winding continues to collapse at the resonant frequency rate of the transformer. This induces into the base-drive winding a voltage that completely turns off the transistor. The collapsing magnetic field goes to zero, then builds in the opposite direction to a maximum before collapsing again (resonant flywheel effect). This sequence of events occurs repetitively as the circuit continues to oscillate.

The oscillating magnetic field in the primary winding couples power into the secondary winding of the transformer. The amplitude of the voltage induced in the secondary winding is a function of the turns ratio of the transformer windings.

High-Voltage Oscillator

The High-Voltage Oscillator transforms power obtained from the −15 volt unregulated supply to the various ac levels necessary for the operation of the crt circuitry. The circuit consists of transformer T4340, switching transistor Q4350, and associated circuitry. The low-voltage oscillations set up in the primary winding of T4340 are raised by transformer action to high-voltage levels in the secondary windings. These ac secondary voltages are applied to the DC Restorer, the Cathode Supply, and the anode multiplier circuits.

Oscillation occurs due to the positive feedback from the primary winding (pin 4 to pin 5) to the smaller base-drive winding (pin 2 to pin 3) for transistor Q4350. The frequency of oscillation is about 58 kHz, and is determined primarily by the resonant frequency of the transformer.

When power is first applied, the High-Voltage Regulator circuit detects that the negative crt cathode voltage is too positive and pulls pin 2 of transformer T4340 negative. The negative level forward biases transistor Q4350 via the base-drive winding of the transformer. Current begins to flow in the primary winding through transistor Q4350, inducing a magnetic field around the transformer primary winding. The increasing magnetic field induces a current in the base-drive winding that further increases the base drive to the transistor. This in-phase feedback causes current in Q4350 to increase until the primary winding current reaches its maximum value. As the rate of change of the primary current peaks and then reverses, the induced magnetic field begins to decay. This decreases the base-drive current and begins turning Q4350 off.

As Q4350 is beginning to turn off, the magnetic field around the primary winding continues to collapse at the resonant frequency rate of the transformer. This induces into the base-drive winding a voltage that completely turns off the transistor. The collapsing magnetic field goes to zero, then builds in the opposite direction to a maximum before collapsing again (resonant flywheel effect). This sequence of events occurs repetitively as the circuit continues to oscillate.

The oscillating magnetic field in the primary winding couples power into the secondary windings of the transformer. The amplitude of the voltages induced in the secondary windings is a function of the turns ratios of the transformer windings.

Cathode Supply

The Cathode Supply is composed of a voltage-doubler and a RC filter network contained within High-Voltage Module U4310. This supply produces the −2 kV accelerating potential applied to the CRT cathode. This supply also provides voltage to the focus range divider, the wall band, and the MCP.

The −2 kV supply is monitored by the High Voltage Regulator to maintain the regulation of all voltages from the High Voltage Oscillator.

The 2 kV peak-to-peak AC voltage from pin 9 of transformer T4340 (1KV peak) is applied to a conventional voltage-doubler circuit at pin 7 of the High Voltage Module. The negative output DC value to the CRT cathode is about equal to the AC peak-to-peak input voltage.

On the positive half cycle, the input capacitor at U4310 pin 7 (0.0047 μf) is charged to 1 kV through the forward-biased diode connected to ground at pin 9 of U4310. The following negative half-cycle adds 1 kV to the 1 kV DC stored on the input capacitor. Thus producing a total peak voltage of −2 kV which is applied to the cathode of the second diode. This forward biases the second diode charging the 0.01-μf capacitor (connected across the two diodes) to −2 kV. Two RC filters follow the negative voltage doubler to reduce the ac ripple.

Neon lamp DS4410 (a 180 V Surge Arrestor) prevents arcing between the grid and cathode inside the crt should the control grid potential or cathode potential be lost.

High Voltage Regulator

The High Voltage Regulator consists of inverting operational amplifier U4366A and associated circuitry. The regulator monitors the crt Cathode Supply voltage and varies the bias point of the switching transistor in the High Voltage Oscillator to hold the Cathode Supply voltage at the nominal level. Since the output voltages at the other secondary winding taps are related by turns ratios to the Cathode Supply voltage, all voltages are held in regulation.

When the Cathode Supply voltage is at the proper level (−2 kV), the sum of the currents through R4334 and the 19-MΩ resistor internal to High Voltage Module U4310 holds the voltage developed across C4344 at zero volts. This balance condition sets the base drive of Q4350 via regulator U4366A. Varying the base drive to Q4350 holds the secondary voltages in regulation.

If the Cathode Supply voltage level is too positive, a slightly positive voltage will develop across C4344. This voltage causes the output of regulator U4366A to move negative. The negative shift charges capacitor C4363 to a different level, around which the induced feedback voltage at the base-drive winding will swing. The added negative bias causes Q4350 to turn on earlier in the oscillation cycle, and a stronger current pulse is induced in the secondary windings. The increased power in the secondary windings increases the secondary voltages until the Cathode Supply voltage moves more negative, returning the voltage across C4344 back to zero (balanced condition). Opposite action occurs if the Cathode Supply voltage is too negative.

DC Restorer

The DC Restorer provides a negative bias to the crt control-grid and couples both the dc and the low-frequency components of the Z-Axis drive signal to the crt control grid. This circuit allows the Z-Axis Amplifier to control the display intensity by coupling the low-voltage Z-Axis drive signal (VZ OUT) to the elevated crt control-grid potential (about −2 kV).

The DC Restorer circuit (Figure 3-10) operates by impressing the crt grid bias setting and the Z-Axis drive signal onto the high voltage AC waveform. The shaped ac waveform is then coupled to the crt control-grid through a coupling capacitor that restores the dc components of the signal to the control grid.

GRID BIAS LEVEL. An ac drive voltage of approximately 300 V peak-to-peak is applied to the DC Restorer circuit from pin 1 of transformer T4340 (Test Point 71). The sinusoidal waveform is current limited and DC level shifted by coupling capacitor C4343. The negative half of the ac drive signal is clipped by diode CR4342.

The positive half cycle is applied to the junction of CR4423 and CR4422 via resistor R4341. Clamping diode CR4423, Transistor Q4331, and associated components form a voltage clamp circuit that limits the positive swing of the ac waveform at Test Point 72.

Transistor Q4331 is an inverting operational amplifier, with C4332 and R4336 as the feedback elements. The feedback current through R4336 develops a voltage across the resistor that is positive with respect to the +42.6 V on the base of the transistor. The value of this voltage plus the diode drop across CR4423 sets the upper clamping threshold. Grid Bias potentiometer R4354 sinks varying amounts of current away from the base node of the transistor operational amplifier setting the feedback current through R4336. The adjustment range of the pot can set the nominal clamping level between +71 V and +133 V.

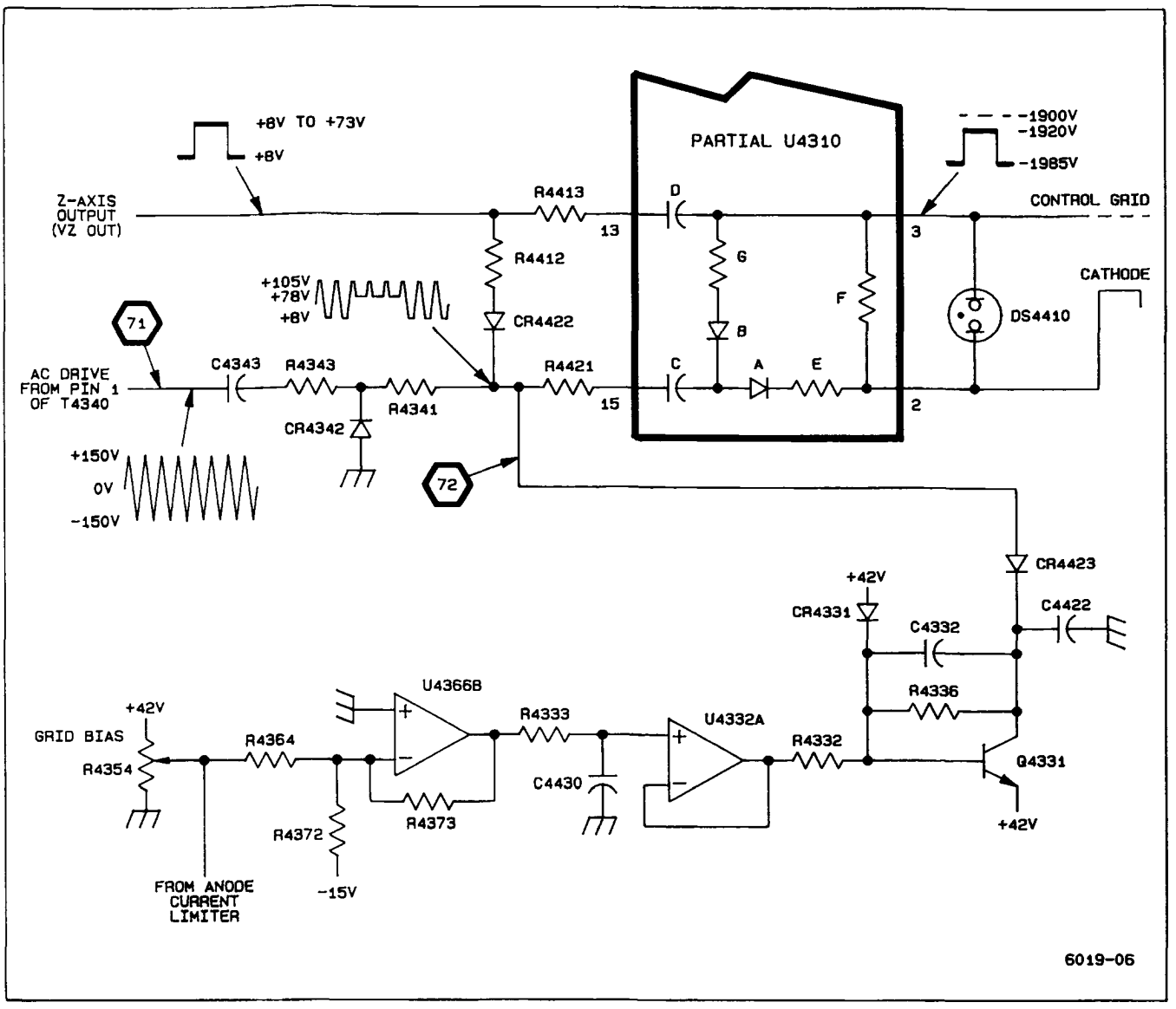

Figure 3-10. Dc restorer circuit (2467B only).

During the time diode CR4423 is reverse biased (not clamping the positive peaks), transistor Q4331 is kept biased in the active region by the charge retained on C4422 from the previous positive clamping cycle. As the positive amplitude of the ac waveform at Test Point 72 exceeds the voltage at the collector of Q4331, diode CR4423 becomes forward biased, and the ac waveform is clamped at that level. Any current greater than that required to maintain the clamp voltage will be shunted to the +42-V supply by transistor Q4331.

Operational amplifier U4332A sinks a time-dependent variable current away from the base of Q4331 that modifies the crt grid bias during the first few minutes of instrument operation. The circuit compensates for the changing grid drive characteristics of the crt as it warms up.

At power-up, capacitor C4430 begins charging through R4333 toward the Positive voltage on pin 7 of U4366B. The voltage is relative to the setting of grid bias potentiometer R4354. The output of U4332A follows the rising voltage on pin 3 and after about ten minutes (for all practical purposes) reaches the voltage on pin 7 of U4366B. As the output voltage slowly increases, the charging current through R4332 causes the Grid Bias voltage to gradually decrease from its power-on level. If instrument power is momentarily turned off and then back on, the crt cathode

will still be warm when power is restored. The output of U4332A will still be near the voltage on U4366B pin 7 rather than starting over at zero volts as when the crt cathode was cold, because the charge on C4430 dissipates slowly during the power off time.

Z-AXIS DRIVE LEVEL. The variable-level Z-Axis signal (VZ OUT) establishes the lower clamping level of the ac waveform applied to the High Voltage Module. When the negative peaks of the AC waveform are below the Z-Axis signal level, CR4422 becomes forward biased, and the negative ac waveform peaks are clamped at the Z-Axis signal level. An image of the Z-axis signal can be seen in the shaped ac waveform on Test Point 72. The VZ OUT level may vary between +8 V and +75 V, depending on the settings of the front-panel INTENSITY, READOUT INTENSITY, Max Grid Drive controls, and Sweep mode.

The shaped ac waveform, now carrying both the grid-bias and the Z-Axis drive information, is applied to a DC Restorer circuit in the High Voltage Module where it is raised to the high-voltage levels of the crt cathode, and it supplies the negative bias to the crt control-grid.

DC RESTORATION. The DC Restorer circuit in the High Voltage Module is referenced to the crt cathode voltage via a connection to pin 2 of U4310.

Capacitor C (in Figure 3-10), connected to pin 15 of U4310, initially charges to a level determined by the difference between the Z-axis signal level (Test Point 72) and the crt cathode potential through R4421, diode A, and resistor E. Capacitor D is charged to a similar dc level through resister F and R4419.

When the shaped ac waveform applied to pin 15 begins its transition from the lower clamped level (set by the Z-Axis signal) towards the upper clamped level (set by the Grid Bias pot.), the charge on capacitor C increases through diode A and resistor E. The additional charge is proportional to the voltage difference between the two clamped voltage levels.

The potential difference between the control grid and the cathode controls the beam current and thus the display intensity. With no Z-Axis signal applied (INTENSITY control off), capacitor D will be charged to its maximum negative value, since the difference between the two clamped voltage levels is at its maximum value. This is the minimum intensity condition and reflects the setting of the Grid Bias potentiometer. During calibration, the Grid Bias pot is adjusted so that the difference between the upper clamping level (set by the Grid Bias pot) and the "no signal" level of the Z-Axis drive signal (VZ OUT) produces a control grid bias that barely shuts off the crt electron beam.

As the INTENSITY control is advanced, the amplitude of the square-wave Z-Axis signal increases accordingly. This increased signal amplitude decreases the difference between the upper and lower clamped levels of the ac waveform. This decreases the potential difference between the control grid and the cathode, and more crt beam current is allowed to flow. Increased beam current increases the crt display intensity.

The fast-rise and fast-fall transitions of the Z-Axis signal are coupled to the crt control grid through capacitor D. This ac-coupled fast-path signal quickly sends the crt electron beam to the new intensity level, then the slower DC Restorer path through capacitor C "catches up" to handle the DC and low-frequency components of the Z-Axis drive signal.

Anode Current Limiter and Multiplier

The Anode Current Limiter keeps maximum Intensity to a comfortable viewing level. It also protects the Micro Channel Plate element from excessive aging. The anode multiplier provides the CRT with the necessary high voltage accelerating potential.

ANODE CURRENT LIMITER. The maximum anode current is limited to a safe value during high intensity drive conditions by increasing the crt control-grid DC bias. This increased grid bias reduces the cathode current which limits the maximum number of electrons arriving at the MCP, the Anode, and the CRT screen.

The circuit is composed of Q4300 and Q4301 and associated circuitry to form a comparator which increases crt grid bias at high intensity settings, and also limits maximum intensity.

Q4301 is biased at −5 V and is off at low to medium crt intensity settings. Peak anode current is sampled and averaged across R4300 and C4300. Darlington Emitter Follower Q4300 is configured as a voltage follower to current converter. The voltage difference between emitter of Q4300 and emitter Q4301 is converted to current through R4304. At low crt intensity settings the base of Q4300 is near zero and the emitter is about −1.5 volts. Therefore, all current flowing through R4306 flows through Q4300. During high intensity drive conditions CRT anode current produces an average voltage greater than −4.4 Volts across R4300, C4300 and the base of Q4300. When the emitter is greater than about −5.8 volts, part of the current flowing in Q4300 starts flowing through R4304 and into emitter of Q4301. The increasing collector current through Q4301 goes into the base node of inverting operational amplifier Q4331 and raises the grid bias clamping voltage on the collector of Q4331. This increasing clamping voltage increases the CRT grid bias until the anode current is limited. Operation of crt grid biasing is explained in detail in Grid Bias Level.

ANODE MULTIPLIER. The Anode Multiplier circuit (also contained in High Voltage Module U4310) uses a 6X voltage multiplier to produce the +15 kV CRT anode potential. It can be thought of as three voltage-doubler circuits in series.

The first negative half-cycle charges the 0.001-μf input capacitor (connected to pin 8 of the High Voltage Module) to a value of 2.5 kV through the diode connected to pin 10. The following positive half cycle adds its voltage to the voltage stored on the input coupling capacitor via the second diode, generating +5 kV on the 0.001-μf filter capacitor connected to pin 10 of U4310. The following cycles continue to boost up succeeding capacitors to values 2.5 kV higher than the preceding capacitor until all six capacitors are fully charged. This places the output of the last capacitor in the multiplier at +15 kV above ground potential. Once the multiplier reaches operating potential, succeeding cycles replenish current drawn from the Anode Multiplier by the crt beam. The 1-MΩ resistor in series with the output to the CRT Anode protects the 6X multiplier by limiting the anode current to a safe value.

Focus Circuitry

The Focus Circuitry is composed of six control circuits to drive five CRT Elements. The (1) Dynamic and (2) Static Focus circuits combine to drive the crt Focusing Electrode V901 pin 4. The four remaining circuits also affect spot focusing and they are: (3) PDD Lens and Wall Band Supply to J4391. (4) Rear MCP Supply to TP4302, (5) Astigmatism to pin 12, and (6) Edge Focus to pin 8.

DYNAMIC FOCUS. The dynamic focus amplifier, in conjunction with the auto-focus circuitry of Z-Axis hybrid U950 (diagram 6), provides optimum focus of the crt beam for all settings of the front-panel INTENSITY control.

The focusing electrode dynamically tracks changes in the display intensity. The VQ OUT signal, applied to the crt through the dynamic focus amplifier consisting of Q4422, Q4402, Q4403 and associated components is exponentially related to the VZ OUT (intensity) signal.

To keep the output signal within the dynamic range of the amplifier, the input is level shifted positive by coupling capacitor C4412 and clamping diode CR4421 which limits negative signal peaks to −0.6 volts. Resistor R4414 in conjunction with feedback resistor R4411 set the inverting operational amplifier gain to less than one (−.87). Offset resistor R4415 and feedback resistor R4411 set the DC output at +60 volts. Emitter follower Q4422 provides current gain to drive voltage amplifier Q4402 which uses Q4403 as a constant current load. Coupling capacitor C4411 provides an AC signal to Q4403 to also use it as an AC voltage amplifier. The output is AC coupled to CRT pin 4 which is also supplied a high negative DC focus voltage from the static focus circuit. Current limiting resistor R4405 and diodes CR4410 and CR4411 across Q4402 and Q4403 respectively protect the transistors from CRT voltage transients.

STATIC FOCUS. During calibration, FOCUS potentiometer R976 is pre-set to mid-range. Focus Range (R4430) and ASTIG (R977) potentiometers are then set for optimum focus of the CRT beam at low intensity. After calibration the Focus Range and ASTIG pots remain as set, and the FOCUS control is positioned as required when viewing the displays at various intensity settings.

The static focus amplifier consists of shunt-feedback inverting operational amplifier Q4432 and associated components. The output of the amplifier controls the zero to −320 volts at R4431, the bottom end of the focus range divider. The negative cathode voltage is connected to R4434, the top end of the focus range divider. Static focus amplifier Q4432 inverts and amplifies the Focus control voltage, the output sets the voltage at R4431, the bottom end of the focus range divider. The wiper of R4430, the middle of the focus range divider, supplies the static focus voltage to the CRT Focusing Electrode, pin 4.

PDD LENS AND WALL BAND SUPPLY (−1 kV). The Wall Band Supply consists of high voltage transistor Q4440, four 200 V Zener diodes, and associated circuitry. Voltage divider resistors R4441 and R4442 provide −1 kV to the base of Q4440, an emitter follower pass transistor. Q4440 provides current gain and −1 kV for the PDD Lens and Wall Band CRT elements through current limiting resistor R4472. Q4440 also provides current and voltage to set the MCP Rear Supply.

MCP REAR SUPPLY (−1.1 kV). The MCP Rear Supply consists of 100-V Zener diode VR4450 which is connected to Q4440 in the Wall Band Supply, and R4440, which is connected to the −2 kV Cathode supply. It supplies −1.1-kV to the rear of the MCP through current limiting resistor R4471. Diode CR4440 protects the base of Q4440 against reverse bias conditions.

ASTIGMATISM. Initially, at the time of adjustment, the FOCUS and ASTIGmatism potentiometers are set for optimum focus of the crt beam at low intensity. After that initial adjustment, the ASTIG pot normally remains as set, and the FOCUS control is positioned as required while viewing the display.

The ASTIGmatism amplifier is composed of U4332B (operational amplifier integrator), Q4454, and associated components. The small input control voltage of zero to +5 volts DC is inverted by U4332 and the output voltage is

changed to a current through R4453 to the emitter of Q4454. Common base amplifier Q4454 is used as a current to high voltage converter with a large output swing of 85 volts (+75 volts to minus 10 volts). The output is bypassed before going through current limiting resistor R4452 to the Astigmatism grid, pin 8.

EDGE FOCUS. Edge Focus potentiometer R4342 adjusts the voltage to optimize the edge focus of the displayed waveform. The potentiometer can swing the voltage on CRT pin 12 above and below the +42 volt level on Anode 1.

MCP-CRT Control Circuits

The CRT Control circuits provide the signal attenuation factors and various level setting potentials to drive the elements of the CRT. The signal portion terminates the Vertical deflection plate delay elements and is called Vertical Termination. The three level setting circuits produce currents and voltage levels necessary for the CRT to operate properly. The Trace Rotation, Geometry, and Y-Axis Alignment complete the necessary adjustments for proper crt operation.

VERTICAL TERMINATION. CRT termination adjustment R1301 is set to match the vertical deflection plates to Vertical Output Amplifier U600 (diagram <6>, 2467B).

TRACE ROTATION. TRACE ROTATION potentiometer R975 is a front-panel screwdriver-adjustable control. It controls the amount of positive or negative current through trace rotation coil L90. The adjustment magnetically rotates both the x-axis and y-axis deflections of the CRT trace so that the trace can be aligned to the internal graticule markings.

GEOMETRY. Geometry potentiometer R4350 controls the voltage that optimizes the geometry of the displayed waveform. It can adjust the voltage on CRT pin 10 above and below the +42 volt level on Anode 1.

Y AXIS ALIGNMENT. Y-AXIS (vertical) ALIGNMENT potentiometer R4370 rotates the the beam after vertical deflection but before horizontal deflection. This adjustment controls the amount of positive or negative current through the Y-Axis Alignment coil. The coil is located between the vertical and horizontal deflection plates and is wound on the neck of the crt. Current through the coil magnetically rotates the vertical portion of the trace. The control is adjusted to produce precise perpendicular alignment between the x-axis and y-axis deflections.

LOW VOLTAGE POWER SUPPLY

The low voltages required by the instrument are produced by a high-efficiency, switching power supply. This type of supply directly rectifies and stores charge from the ac line supply; then the stored charge is switched through a special transformer at a high rate, generating the various supply voltages.

Line Rectifier

Ac line voltages of either 115 V or 230 V may provide the primary power for the instrument, depending on the setting of LINE VOLTAGE SELECTOR switch S90 (located on the instrument rear panel). Power Switch S350 applies the selected line voltage to power supply rectifier CR1011.

With the selector switch in the 115 V position, the rectifier and storage capacitors C1021 and C1022 operate as a full-wave voltage doubler. When operating in this configuration, each capacitor is charged on opposite half cycles of the ac input, and the voltages across the two capacitors in series will approximate the peak-to-peak value of the source voltage. For 230 V operation, switch S90 connects the rectifier as a conventional bridge rectifier. Both capacitors charge on both input half cycles, and the voltage across C1021 and C1022 in series will approximate the peak value of the rectified source voltage. For either configuration, the dc voltage supplied to the power supply inverter is the same.

Thermistors RT1010 and RT1016 limit the surge current when the power supply is first turned on. As current flow warms the thermistors, their resistances decrease and have little effect on circuit operation. Spark-gap electrodes E1001 and E1002 are surge-voltage protectors. If excessive source voltage is applied to the instrument, the spark-gaps conduct, and the extra current flow quickly exceeds the rating of fuse F90. The fuse then opens to protect the instrument's power supply. The EMI (electromagnetic interference) filter, inductors L1011 and L1012, capacitors C1016 and C1018, and resistors R1011, R1012, R1016 and R1018 form a line-filter circuit. This filter, along with common mode rejection transformer T1020, prevents power-line interference from entering the instrument and prevents power supply switching signals from entering the supply line.

Preregulator Control

The Preregulator Control circuit monitors the drive voltage applied to inverter output transformer T1060 and holds it at the level that produces proper supply voltages at the secondary windings.

The Preregulator Control circuit consists primarily of control IC U1030, its switching buffers, and its power supply components. The control IC senses voltage on the primary winding of T2060 and varies the "on time" of a series-switching transistor, depending on whether the sensed voltage was too high or too low. The switching transistor Q1050, rectifier CR1050, choke T1050, and capacitor C1050 form a buck-switching regulator circuit. The output voltage at W1060 is proportional to the product of the rectified line voltage on C1020-C1022 and the duty cycle of Q1050. In normal operation, Q1050 is on about one-half the time. When Q1050 is off, current flows to W1060 and T1060 through CR1050.

PREREGULATOR CONTROL POWER SUPPLY. Since the Preregulator Control network controls supply startup and preregulates the secondary supplies, an independent power source must be established for it before any of the other power supplies will operate. The independent power supply for the control circuitry is composed of Q1021, Q1022, and associated components.

Initially, when instrument power is applied, the positive plate of capacitor C1025 is charged toward the positive rectified line voltage through R1020. The voltage at the base of Q1022 follows at a level determined by the voltage divider composed of R1022, R1024, CR1023, and the load within U1030. When the voltage across C1025 reaches about +21 V, the base voltage of Q1022 reaches +6.8 V and Q1022 turns on, saturating Q1021. The +21 V on the emitter of Q1021 appears at its collector and establishes the positive voltage supply for the Preregulator IC. With Q1021 on, R1024 is placed in parallel with R1022, and both Q1022 and Q1021 remain saturated.

The +21 V level begins to drain down as the control IC draws current from C1025. If the Preregulator Control IC doesn't start the switching supply (and thus recharge C1025 and C1023 via CR1022) by the time the voltage across C1025 reaches about +8 V, Q1021 will turn off. Resistor R1024 pulls the base of Q1022 low and turns that transistor off also. (Capacitor C1025 would only discharge low enough to turn off the transistors under a fault condition.) In this event, C1025 would then charge again to +21 V, and the start sequence would repeat. Normally, the control IC will start Inverter action before the +8 V level is reached, and current is drawn through T1050 via Q1050. This induces a current in the secondary winding of T1050 via Q1050. This induces a current in the secondary winding of T1050 and charges C1025 positive via diode CR1022. The turns ratio of T1050 sets the secondary voltage at approximately +15 V; and, as long as the supply is being properly regulated, C1025 will be charged up to that level and held there.

PREREGULATOR START-UP. As the supply for the Preregulator Control IC is established, an internal switching oscillator begins to run. The oscillator generates a repetitive triangular wave (as shown in Figure 3-11) at a frequency determined primarily by R1032 and C1032. The simplified schematic of Figure 3-12 illustrates the voltage control functions of U1030.

As the Preregulator power supply turns on, capacitor C1034 charges from the +5 V reference level toward ground potential through R1034 and R1037. As it does, the voltage at pin 4 (one input of Dead-Time Comparator U1) will pass through the positive-peak value of the triangular waveform on the other input of the Dead-Time Comparator. The comparator will then begin outputting narrow pulses that become progressively wider as the voltage on pin 4 settles to zero volts. These pulses drive switching transistor Q1050, and their slow progression from narrow to wide causes the various secondary supplies to gradually build up to their final operating levels. The slow buildup prevents a turn-on current surge that would cause the current-limit circuitry to shut down the supply.

During startup, capacitor C1072 acts as a substantial load, and a relatively large current flows in the windings of T1050 for the first few cycles of Preregulator switching. These strong current pulses ensure that storage capacitor C1066 becomes charged sufficiently to start the Inverter Drive circuit. Once the Inverter Drive stage is operating, the normal switching current through T1050 maintains the required charge on C1066. (The Inverter Drive power supply is discussed later in this description.)

Dead-Time Comparator U1 is referenced at approximately 0.1 V above the ground level at pin 4 (established when C1034 becomes fully charged) and outputs a narrow, negative-going pulse that turns off switching transistor Q1050 for a portion of each switching cycle. This off time ensures that flip-flop U1064B in the Inverter Drive circuit toggles every cycle (thereby maintaining the proper duty cycle), independent of the voltage conditions being sensed by the remainder of the voltage control circuitry.

PREREGULATION. Once the initial charging at power-up is accomplished, as just described, the voltage-sensing circuitry begins controlling the Inverter switching action. The actual voltage sensing is done by error amplifier U2. The level at the center tap of output transformer T1060 is applied to pin 1 and is compared to the reference established by R1045 and R1046 at pin 2. If the sensed level at pin 1 is lower than the reference level (as it will always be for the first few switching cycles), the of error-amplifier U2 will be LO. The LO, applied to the inverting input of U3, results in a long-duty-cycle drive signal to

transistor Q1050 (via CR1030). Since the Inverter Drive stage will alternately turn either Q1060 or Q1070 on, relatively large current pulses will result in the primary winding of inverter output transformer T1060.

These large current pulses, over the period of a few cycles, will increase the charge on the storage capacitors on the secondary side of the transformer and will reduce the current demand on the inverter output transformer. As the demand increases, the voltage across the primary winding will increase until it reaches the point where the two inputs of U2 are at the same potential. At this point, the output of U2 (to U3) will settle to a level approximately equal to the midpoint of the triangular waveform applied to the other input of U3. The resulting drive signal has an approximate 50% duty cycle and will respond to changes in either the ac line voltage or supply load conditions. Depending on the output levels sensed, the duty cycle of the drive signal will change (sensed level rises or falls with respect to the triangular waveform) to hold the secondary supplies at their proper levels.

Opto-isolator U1040 and resistor R1044 form a control network that allows a voltage sensed at the feedback input (FB) to slightly alter the voltage-sense reference applied to pin 2 of U2. The FB signal is generated by the +5 V Inverter Feedback amplifier (U1371, diagram 10) and is directly related to the level of the $+5V_D$ supply line.

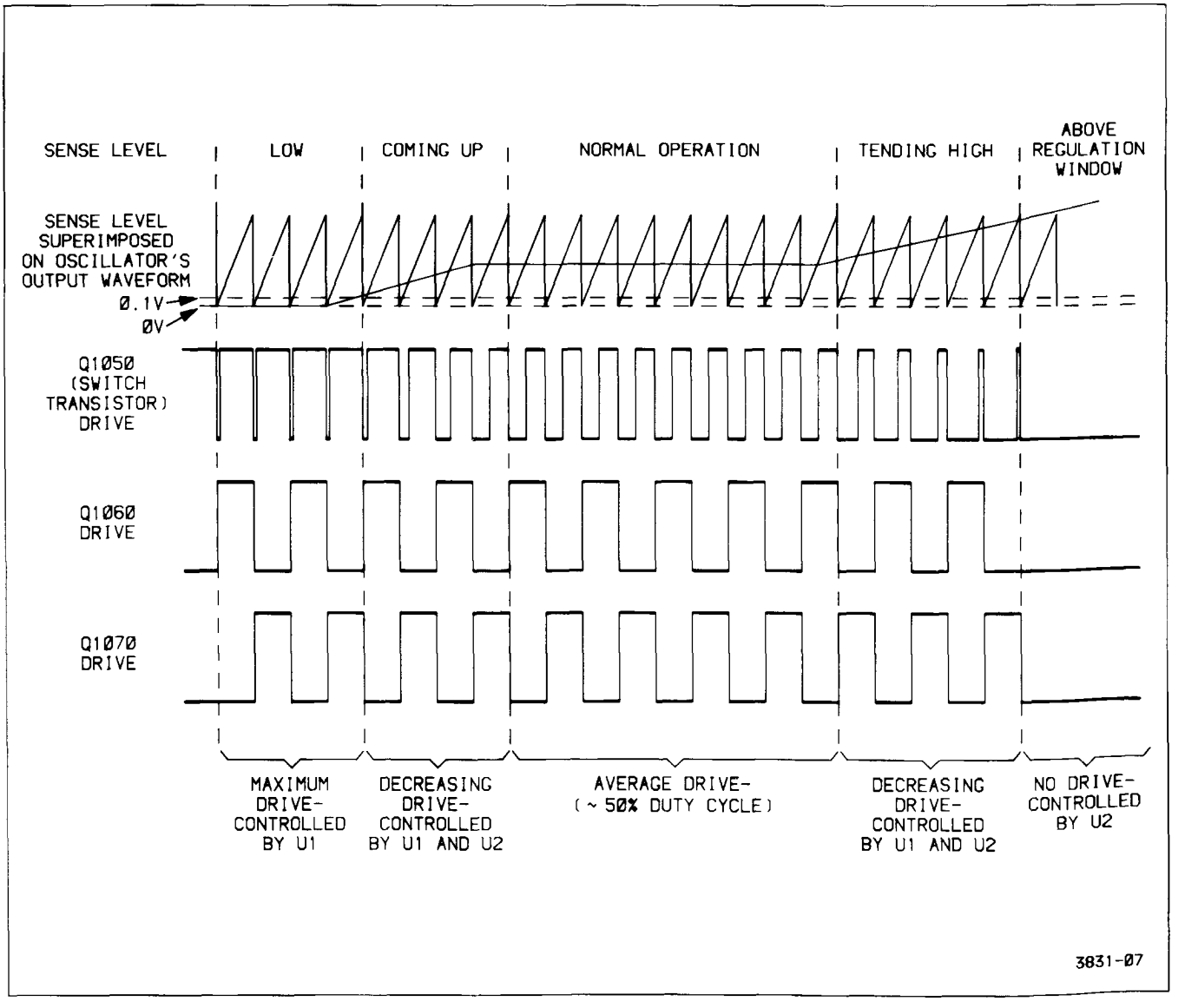

Figure 3-11. Timing relationships of the Inverter Drive signals.

Base drive to the shunt transistor (in opto-isolator U1040) is increased should the FB signal go below its nominal value. Additional current is shunted around R1045 (via R1044) and raises the voltage-sense reference level to error-amplifier U2. This increases the voltage applied to the primary winding of the output transformer, since U2 sensing depends on a balanced condition. Higher currents are induced in the secondary windings, and the secondary voltages begin to return to their nominal values. As the $+5V_D$ line returns to its nominal level, base drive to the shunt transistor will be reduced and the voltage in the primary winding will follow. Should the FB signal level tend too high, opposite control responses occur. Further information about the FB signal is given in the +5 V Inverter Feedback description.

Error amplifier U4 and the voltage divider composed of R1035 and R1031 provide a backup sensing circuit. Its operation is similar to that of error amplifier U2, just described, but it senses at a slightly higher level. As long as U2 is operating properly, U4 will be inactive. However, should a failure occur in the U2 sensing circuitry, the voltage on the primary winding of T1060 will rise to the sensing level at pin 15 of U4. Sense amplifier U4 will then take over, preventing a damaging over-voltage condition.

Inverter Drive

The Inverter Drive circuit performs the necessary switching to drive the inverter output transformer. Like the

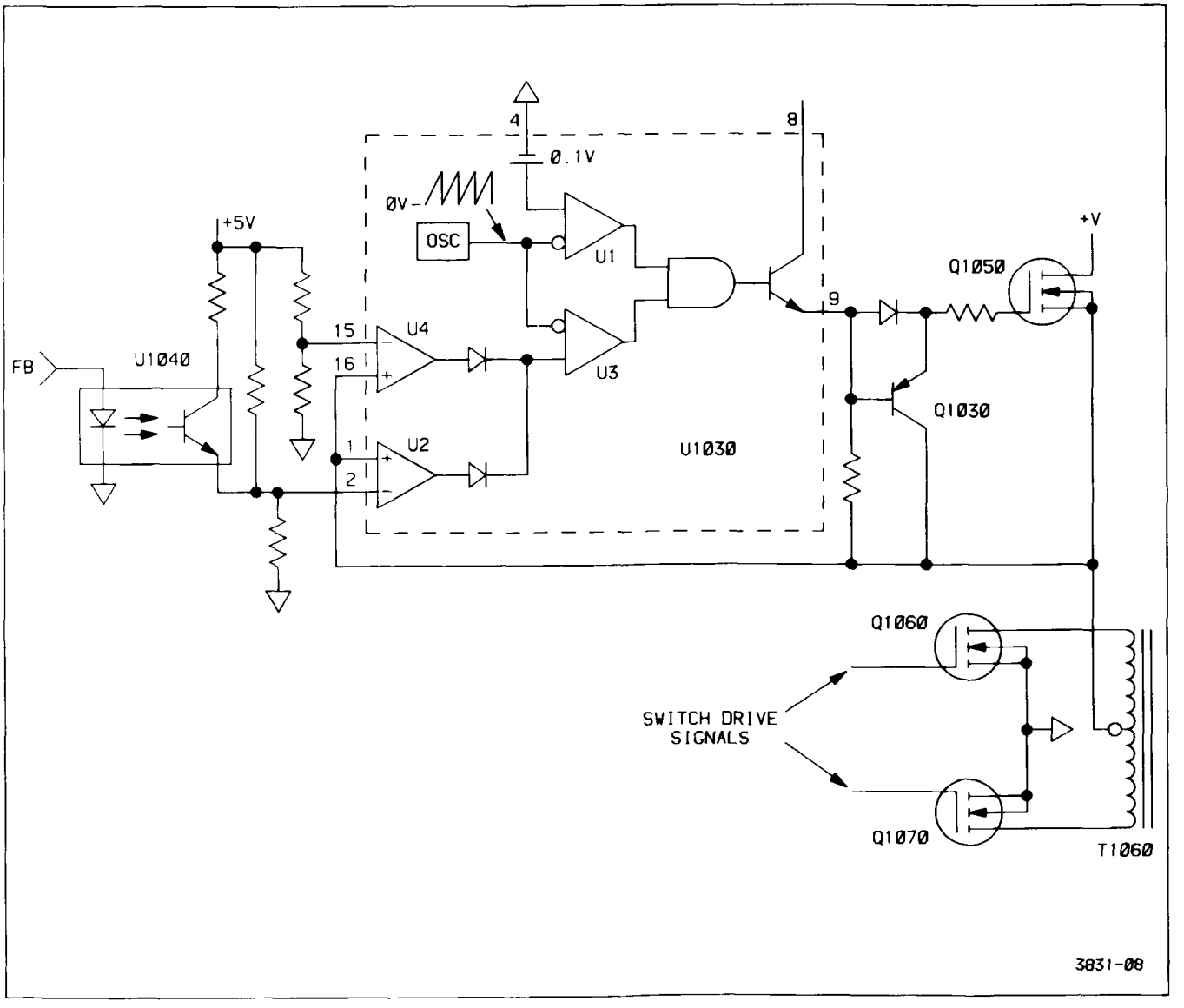

Figure 3-12. Simplified schematic of control network.

Preregulator Control IC, the Inverter Drive circuit requires an independent power supply, since it must be operational before any of the secondary supply voltages can be generated.

INVERTER DRIVE POWER SUPPLY. This power supply consists of Q1062, VR1062, and their associated components. As power is first applied, the initial charging current through T1050 induces a current in the transformer secondary winding (pins 8 and 9). The alternating current is rectified by the diode bridge composed of CR1062, CR1063, CR1064, and CR1065 and stored in C1066, providing power for the Inverter Drive circuitry.

When the Preregulator Control IC turns switching transistor Q1050 on for the first time, the charge stored on C1066 during the initial charging period is sufficient to properly turn on one of the current-switching transistors (either Q1060 or Q1070) for the first cycle. After that, the alternating drive signals continue to induce current into the secondary winding of T1050 to provide operating power as long as the instrument is turned on.

The current rectified by the diode bridge and stored on capacitor C1066 is regulated down to the required voltage level by R1061, VR1062, and Q1062. Zener diode VR1062 references emitter-follower Q1062 and holds the supply output at approximately +11.4 V.

INVERTER DRIVE GENERATOR. The Inverter Drive generator consists of U1062, U1064, U1066, switching transistors Q1060, Q1070 and their associated components. The circuitry alternately switches current through each leg of the output transformer (T1060) primary winding and produces the ac current required for transformer action.

Out-of-phase input signals to comparator U1062C come from two resistive voltage dividers place in either leg of one secondary winding of T1050. The comparator detects the phase changes (crossover points) of the secondary current caused as Q1050 switches on and off. Every complete on-off cycle of Q1050 produces a positive clock at pin 14 of U1062C that toggles flip-flop U1064B. The toggling alternately turns switching transistors Q1060 and Q1070 on, each with an approximate 50% duty cycle.

Comparators U1062A and U1062B, at the Q and $\overline{Q}$ output of the flip-flop, detect the precise crossing point of the toggling drive signals and ensure that only one switching transistor will be on at any one time. These mutually-exclusive drive signals are buffered by inverters U1066A and U1066B and applied to switching transistors Q1060 and Q1070 to alternately turn them on and off at one-half the switching rate of Q1050. By alternately switching opposite ends of the primary winding to ground, the current flowing through switching transistor Q1050 will flow alternately in each half of the primary winding. This produces ac voltages at the secondary windings that are then rectified, providing the various unregulated dc supply voltages.

Current Limit

The Current Limit circuit, composed of transistor Q1040 and the associated components, limits the maximum current flow in the output transformer to about 1 ampere. Resistor R1040 (connected to the Preregulator Control IC +15 V supply) forward biases germanium diode CR1040 and applies approximately +0.3 V across the base-to-emitter junction of Q1040. Current flowing to the output transformer develops a voltage drop across R1050 that adds to the bias developed by CR1040. As the current to the transformer increases, the voltage drop across R1050 also increases until, at around 1 A, the combined voltage drop across R1050 and CR1040 forward biases transistor Q1040. The base of Q1022 is pulled negative through R1042, and the +15 V supply for the Preregulator IC turns off (see Preregulator Control description). The power supply will try to restart itself; but, as long as the excessive-current condition persists, the current-limit circuit will keep shutting the supply down, protecting the instrument.

Rectifiers

The rectifiers convert the alternating current from the secondary windings of inverter output transformer T1060 to the various dc supply voltages required by the instrument. Rectification is done by conventional diode rectifier circuits, and filtering is done by conventional LC networks.

The +87 V unregulated supply is produced by a voltage-doubler circuit. The positive plate of C1130 at the anode of CR1132 is referenced at approximately +45 V through diode CR1131 (to the +42 V unregulated supply). As the positive half cycle from the 42 V secondary winding (actually about +45 V peak) is applied to the negative plate of C1130, the positive plate is elevated to a peak value of approximately +90 V. Diode CR1132 becomes forward biased and storage capacitor C1132 is charged to about +90 V. Following cycles replenish the charge drawn off by the loads on the +87 V supply line.

Line Signal

A sample of the ac line voltage is coupled to the Trigger circuit by transformer T1229 and provides the LINE TRIG signal to the Trigger hybrid. Transformer current is limited

to a safe value by resistors R1014 and R1015 placed in series with the primary winding leads. The transformer's output characteristics are matched to the input of the Trigger circuit hybrid by R1208 and C1208.

Line Up Signal

The circuit composed of Q1029, opto-isolator U1029, and their associated components, detects when power has been applied to the instrument and the Preregulator Control power supply is functioning properly. When the rectified line voltage reaches proper operating voltage, the voltage divider composed of R1027 and R1028 forward biases Q1029. As soon as the Preregulator Control power supply turns on, current flows through R1029, Q1029, and the opto-isolator LED. The illuminated LED saturates transistor U1029 and the LINE UP signal to the Power-Up Delay circuit (diagram 1) is pulled HI, indicating that the Preregulator Control circuit should now be functioning properly.

POWER DOWN. When instrument power is turned off, the voltage across the primary storage capacitors (C1021 and C1022) begins to fall as the capacitors discharge. As the voltage drops, the bias current through R1027 to the base of Q1029 also drops until the bias voltage across R1028 reaches a point about 2 V above the average transformer drive level at pin 2 of U1029. At this point, Q1029 turns off, and the LINE UP signal to the Power-Up Delay circuit goes LO. This LO signals the Microprocessor that it should start its power down routine.

The Line Up circuit tells the Microprocessor that the primary capacitors have started discharging while there is still a stored charge (set by R1027 and R1028) about 40% in excess of that required to keep the power supply voltages in regulation. This allows the Microprocessor to complete the power-down sequence before the supplies drop below their normal operating level. Further information about the power-down sequence is given in the Microprocessor Reset Control description.

Fan Circuit

Fan motor B10 is driven by adjustable three terminal regulator U1110. The fan's speed is determined by the voltage supplied by U1110 and varies with ambient temperature.

As the ambient temperature in the cabinet increases, the resistance of thermistor RT1110 decreases causing more current to flow in R1112. This causes the voltage at pin 2 and therefore the voltage at pin 3 of U1110 to increase, and the fan motor speed increases to provide more cooling capacity.

LOW-VOLTAGE REGULATORS

The Low-Voltage Regulators remove ac noise and ripple from the various unregulated dc supply voltages. Each regulator output is automatically current limited if the output current exceeds the requirements of a normally functioning instrument. This limiting prevents any further component damage.

+10 Volt Reference

Each of the power-supply regulators control their respective outputs by comparing their output voltages to a known reference level. In order to maintain stable supply voltages, the reference voltage must itself be highly stable. The circuit composed of U1290, U1300C and associated components establish this reference.

Resistor R1400 and capacitor C1400 form an RC filter network that smooths the unregulated +15 volt supply before it is applied to voltage-reference IC U1290. The +2.5 V output from pin 2 of U1290 is applied to the noninverting input of operational amplifier U1300C. The output of U1300C is the source of the +10 V reference level used by the various regulators. The output level is set by the voltage divider formed by R1291, R1293, and potentiometer R1292. The Volt Ref Adjust pot in the divider allows the reference level to be precisely set. Zener diode VR1292 prevents the reference from exceeding +11 volts should a failure in the reference circuitry occur.

+87 V Regulator

The +87 V Regulator is composed of Q1220, Q1221, Q1222, Q1223, U1281A, and their associated components. The circuit regulates and limits both the voltage and current of the supply output.

Initially, as power is applied, the voltage applied to pin 2 of U1281A from the voltage divider formed by R1227 and R1228 is lower than the +10 V reference level applied to pin 3. The output of U1281A is forced high, reverse biasing the base-emitter junction of Q1222 and turning it completely off. With Q1222 off, all the current through R1212 is supplied as base current to Darlington transistor pair Q1221 and Q1220, and maximum current flows in series-pass transistor Q1220. This charges up the various loads on the supply line, and the output level charges positive.

As the regulator output charges toward +87 V, the voltage divider applies a positive-going voltage to the inverting input of U1281A. When the output level reaches +87 volts, the inverting input reaches the +10 V refer-

ence at the noninverting input. The output voltage at pin 1 of U1281A will go negative and the base-emitter junction of Q1222 will be biased into the active region. As Q1222 turns on, base drive for the Darlington pair (Q1221 and pass transistor Q1220) is reduced. The output will be held at the level required (+87 V) for voltage at the two inputs of amplifier U1281A to be in balance.

Current limiting is a foldback design and is performed by Q1223 and its associated components. Under normal current demand conditions, Q1223 is off. If the regulator output current exceeds approximately 100mA (as it might if a component fails), the voltage drop across R1221 and CR1220 reaches a point that forward biases Q1223 via the bias divider formed by R1222 and R1223. As Q1223 turns on, a portion of the base-drive current to Q1221 is shunted away by Q1223. This reduces the base-drive current (and thus the output current) of series-pass transistor Q1220.

+42 V Regulator

The circuit configuration and operation of the +42 V Regulator is identical to that of the +82 V Regulator. Current limiting of the +42 V supply occurs at approximately 400 mA. Base drive to Darlington pair Q1241 and Q1240 is via R1244 and is dependent on proper operation of the +87 Volt Regulator. This dependency ensures that the relative polarities of the two supplies are never reversed (preventing semiconductor-junction damage in the associated load circuitry).

+15 V Regulator

The +15 V Regulator uses three-terminal regulator U1260 and operational amplifiers U1371A and U1371B, arranged as voltage sensors, to achieve regulation of the +15 V supply. The three-terminal regulator holds its output voltage at pin 2 at 1.25 volts more positive than the reference input level at pin 1. The voltage at the reference pin is established by current flow in either diode CR1262 or CR1263.

Resistors R1261 and R1262 at the regulator output divide the +15 V level down for comparison with the +10 V reference applied to pin 5 of operational amplifier U1371B. When the input voltage at pin 6 (supplied by the voltage divider) is lower than the +10 V reference, the output of amplifier U1371B is high and the output voltage of U1260 is allowed to rise. As the regulator output reaches +15 V, the voltage on pin 6 of U1371B approaches the level on pin 5, and the amplifier begins sinking current away from the reference pin of the three-terminal regulator via diode CR1263. This lowers the voltage on the reference pin and holds the output at +15 V.

The other voltage-sensing amplifier (U1371A) ensures that the relative polarity between the +15 V supply and the +42 V supply is maintained, preventing component damage in the load circuitry. Should the +42 V supply be pulled below +15 V (excessive loading or supply failure), the voltage at pin 3 of U1371A falls below the voltage at pin 2 and the amplifier output voltage goes low. This forward biases CR1262 and lowers the reference voltage for U1260, reducing the output voltage.

Current limiting for the +15 V supply is provided by the internal circuitry of the three-terminal regulator.

+5 V Regulator

Regulation of the +5 V supply is provided by a circuit similar to those of the +87 V and the +42 V Regulators. As long as the relative polarity between the +15 V and the +5 V supplies is maintained, base drive to Q1281 is supplied through R1283. The current through Q1281 provides base drive for series-pass transistor Q1280.

When voltage-sense amplifier U1300B detects that the output voltage has reached +5 V, it begins shunting base-drive current away from Q1281 via CR1281 and holds the output voltage constant.

Current limiting for the +5 V supply is done by U1300A and associated components. Under normal current-demand conditions, the output of U1300A is high and diode CR1282 is reverse biased. However, should the current through the current-sense resistor R1281 reach approximately 2 A, the voltage developed across R1281 will raise the voltage at pin 2 of U1300A (via divider R1282 and R1286) to a level equal to that at pin 3. This causes the output of U1300A to go low, forward biasing CR1282. This sinks base drive current away from Q1281 and lowers the output current in series-pass transistor Q1280.

−15 V Regulator

Operation of the −15 V Regulator, composed of three-terminal regulator U1330, operational amplifier U1270C, and their associated components, is similar to that of the +15 V Regulator with the following major changes. The control voltage at the three-terminal regulator's reference pin (pin 1) is established by the current through series-resistors R1333 and R1334. The reference pin is clamped by CR1332 at about −5.6 V should a failure in the sensing network occur. (Clamping also prevents latchup of the operational amplifier during start-up of the power supply.) Finally, the sensing divider formed by R1331 and R1332 is referenced to the +10 V reference instead of ground to enable sensing of negative voltage.

−8 V Regulator

Operation of the −8 V Regulator is similar to that of the +87 V and +42 V Regulators. Due to the lower operating voltages of the −8V Regulator the common-base transistor present in both the +87 V and the +42 V is not required. Current limiting in the −8 V supply occurs at about 480 mA.

−5 V Regulator

Operation of the −5 Volt Regulator is similar to that of the +5 V Regulator. Current limiting in the −5 V supply occurs at about 2 A.

+5 V Inverter Feedback

Operational amplifier U1371C and associated components are configured as a frequency-compensated voltage-sensing network. The circuit monitors the +5 V digital power supply line from the rectifiers and provides feedback to the Preregulator Control IC (U1030) via opto-isolator U1040 (both on diagram 9). The feedback is used to slightly vary the voltage-sensing characteristics of the Preregulator Control circuitry. The feedback (FB) signal slightly varies the voltage to the Inverter output transformer and holds the output of the 5 V secondary windings at an optimum level. Output levels of the other secondary windings are related to the +5 V_D level and are also held at their optimum values. This technique minimizes power losses in the series-pass transistors and increases regulator reliability.

Power-Up Delay

The Power-Up Delay circuit, composed of Q1370, Q1376, U1371D, and the associated components, ensures that the various regulated power supplies have time to reach their proper operating voltages before signaling the Microprocessor that the power supplies are up.

When power is first applied, a LINE UP signal from the Preregulator Control circuit goes HI, indicating that the power switch has been closed and that ample supply voltage is available for driving the Inverter transformer. The HI is applied to the base of Q1370, but since the collector is not properly biased yet, no transistor current will flow. As the Inverter begins to run, the various voltages from the secondary rectifiers begin coming up to their proper levels. A +2.5 V reference voltage is applied to operational amplifier U1371D pin 12 and forces the output high, biasing Q1376 on.

Before any of the Low-Voltage Regulators may function properly, the +10 V reference voltage must be established as previously described. When the +15 V Regulator turns on, current flows through Q1370, and pin 13 of U1371D is pulled above the +2.5 V reference through divider R1370 and R1372. The output of U1371D goes low, turning off Q1376.

When power to the instrument is turned off, the LINE UP signal goes LO (as explained in the Line Up Signal description). The falling LINE UP signal turns Q1370 off and drives the output of U1371D high. The output level from U1371D turns on Q1376 and pulls the PWR UP signal to the Microprocessor LO. This LO initiates the power-down sequence used to shut down the instrument in an orderly fashion. The delay between the time that the PWR UP signal goes LO and when the regulated power supplies fall below their normal operating levels provides ample time for the Microprocessor to complete the power-down sequence.

Power Supply Shutdown

Phosphor damage can occur to the CRT if certain regulated power supply voltages are overloaded due to excessive current draw by their loads. U1300C and its associated circuitry monitor the +15 V and the +5 V Regulator supplies. The +87 V and the +42 V Regulator supplies are monitored via R1294 and R1295 respectively. If any of these regulated supplies exceed their limit, current is sourced to U1300D (pin 13). When this happens, the +10 V Reference begins to drop which in turn lowers all the regulated supplies. This causes the high voltage oscillator to shutdown preventing damage to the CRT. Q1290 and its associated circuitry allows the +10 V Reference to come up and stabilize before the shutdown circuitry is enabled. Jumper J208 is used to disconnect the shutdown circuitry for troubleshooting purposes.

POWER DISTRIBUTION

Schematic diagrams 11 and 12 illustrate the power distribution of the instrument. The connections to the labeled boxes (representing the hybrids and ICs) show the power connections to each device, while connections to non-power lines are shown by the component and schematic number. Power supply decoupling is done with traditional LRC networks as shown on the diagrams.

Several intermediate supply voltages are generated by devices shown on diagrams 11 and 12. An approximate +32 volt supply for the A and B Sweeps is developed by emitter-follower Q700 and its associated components. Zener diodes VR125 and VR225 develop approximate +6.2 volt supplies for the CH 1 and CH 2 Preamps respectively, and zener diode VR2805 establishes an approximate −6.8 volt supply for U2800 and U2805.

INTERCONNECTIONS

Schematic diagram 13 illustrates the circuit board interconnections of the instrument. Connector numbers and cabling types are shown.

THEORY OF OPERATION (SN B049999 & BELOW)

INTRODUCTION

SECTION ORGANIZATION

This section contains a functional description of the instrument circuitry. The discussion begins with an overview of the instrument functions and continues with detailed explanations of each major circuit. Reference is made to supporting schematic and block diagrams which will facilitate understanding of the text. These diagrams show interconnections between parts of the circuitry, identify circuit components, list specific component values, and indicate interrelationships with front-panel controls.

The detailed block diagram and the schematic diagrams are located in the tabbed "Diagrams" section at the rear of this manual, while smaller functional diagrams are contained within this section near their respective text. The particular schematic diagram associated with each circuit description is identified in the text, and the diagram number is shown (enclosed within a diamond symbol) on the tab of the appropriate foldout page. For optimum understanding of the circuit being described, refer to both the applicable schematic diagram and the functional block diagram.

HYBRID AND INTEGRATED CIRCUIT DESCRIPTIONS

Digital Logic Conventions

Digital logic circuits perform many functions within this instrument. The operation of these circuits is represented by specific logic symbology and terminology. Most logic-function descriptions contained in this manual use the positive-logic convention. Positive logic is a system of notation whereby the more positive of two levels is the TRUE (or 1) state; the more negative level is the FALSE (or 0) state. In the logic descriptions, the TRUE state is referred to as HI, and the FALSE state is referred to as LO. The specific voltages which constitute a HI or a LO state vary between individual devices. For specific device characteristics, refer to the manufacturer's data book.

Hybrids

Some of the circuits in this instrument are implemented in hybrid devices. The hybrids are specialized electronic devices combining thick-film and semiconductor technologies. Passive, thick-film components and active, semiconductor components are interconnected to form the circuit on a ceramic carrier. The end result is a relatively small "building block" with enhanced performance characteristics, all in one package. Hybrid circuits are shown on schematics simply as blocks with inputs and outputs. Information about hybrid functioning is contained in the related portion of the Detailed Circuit Description.

Linear Devices

The operation of individual linear integrated circuit devices is described in this section using waveforms or other graphic techniques to illustrate their operation.

BLOCK DIAGRAM

The following discussion is provided to aid in understanding the overall operation of the instrument circuitry before the individual circuits are discussed in detail. A simplified block diagram of the instrument, showing basic interconnections, is shown in Figure 3-1. The diamond-enclosed numbers in each block refer to the schematic diagram(s) at the rear of this manual in which the related circuitry is located.

BLOCK DESCRIPTION

The Low Voltage Power Supply is a high-efficiency, switching supply with active output regulation that transforms the ac source voltage to the various dc voltages required by the instrument. The High Voltage Power Supply circuit develops the high accelerating potentials required by the crt, using voltage multiplication techniques, and the DC Restorer provides interfacing for the low-potential intensity signals from the Z-Axis Amplifier to the crt control grid.

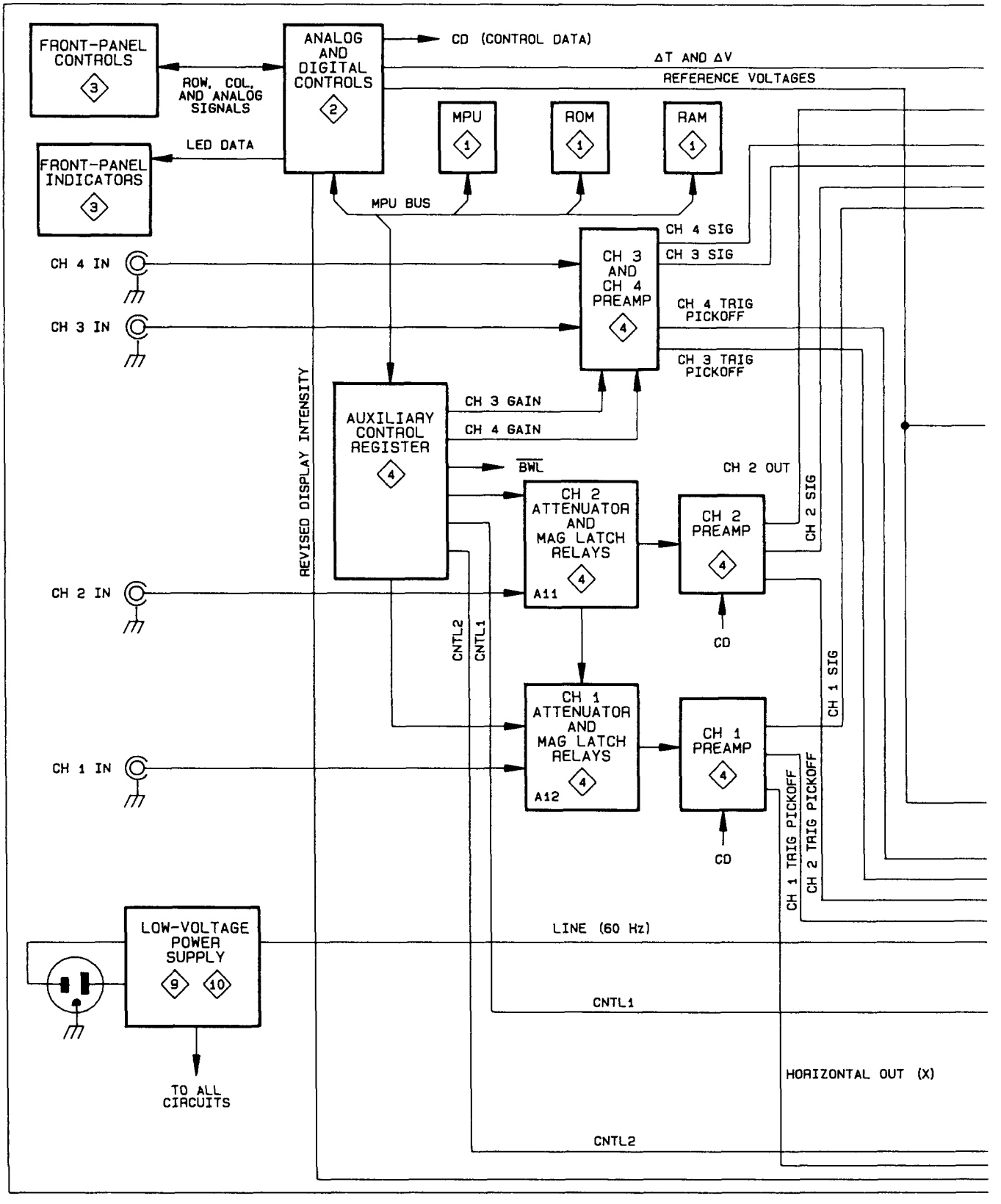

Figure 3-1. Instrument block diagram.

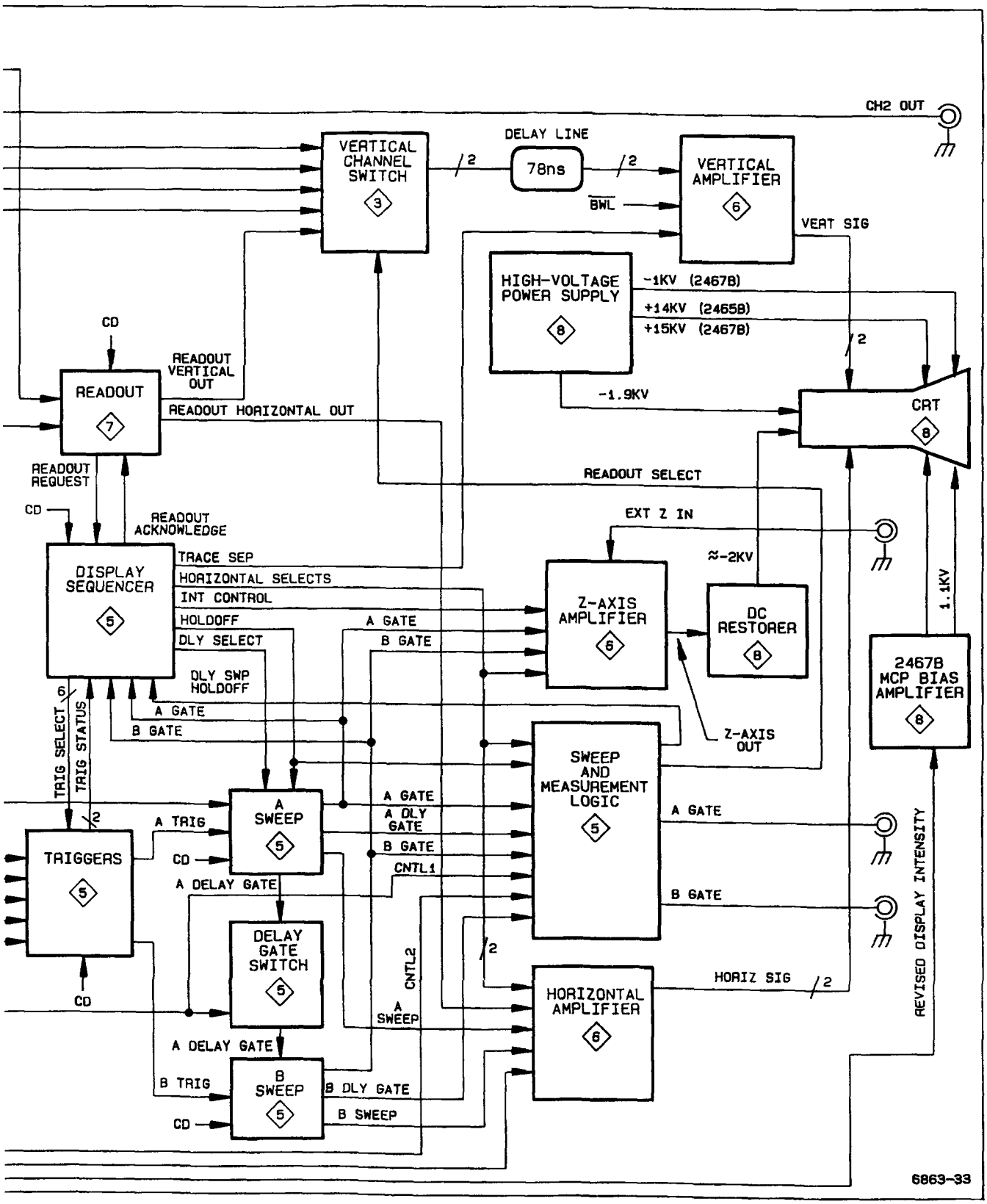

Figure 3-1. Instrument block diagram (cont).

Most of the activities of the instrument are directed by a microprocessor. The microprocessor, under firmware control (firmware is the programmed instructions contained in read-only memory that tells the processor how to operate), monitors instrument functions and sets up the operating modes according to the instructions received.

Various types of data read to and from the Microprocessor (program instructions, constants, control data, etc.) are all transferred over a group of eight bidirectional signal lines called the Data Bus. The Data Bus is dedicated solely to microprocessor-related data transfer.

Another group of signal lines, called the Address Bus, are responsible for selecting or "addressing" the memory location or device that the Microprocessor wants to communicate with. Typically, depending on the instruction being executed, the processor places an address on the Address Bus to identify the location the Microprocessor must communicate with. This address, along with some enabling logic, opens up an appropriate data path between the processor and the device or memory location via the Data Bus; and data is either read from or written to that location by the processor.

While executing the control program, the Microprocessor retrieves previously stored calibration constants and front-panel settings and, as necessary places program-generated data in temporary storage for later use. The battery backed up RAM provides these storage functions.

When power is applied to the instrument, a brief initialization sequence is performed, and then the processor begins scanning the front-panel controls. The switch settings detected and the retrieved front-panel data from the battery backed up RAM causes the processor to set various control registers and control voltages within the instrument that define the operating mode of the instrument. These register settings and voltage levels control the vertical channel selection and deflection factors, the sweep rate, the triggering parameters, the readout activity, and sequencing of the display. Loading the control data into the various registers throughout the instrument is done using a common serial data line (CD). Individual control clock signals (CC) determine which register is loaded from the common data line.

Coordination of the vertical, horizontal, and Z-Axis (intensity) components of the display must be done in real time. Due to the speed of these display changes and the precise timing relationships that must be maintained between display events, direct sequencing of the display is beyond the capabilities of the processor control. Instead, control data from the processor is sent to the Display Sequencer (a specialized integrated circuit) which responds by setting up the various signals that control the stages handling real-time display signals. The controlled stages are stepped through a predefined sequence that is determined by the control data. Typically, as the sequence is being executed, the Display Sequencer will be changing vertical signal sources, Z-Axis intensity levels, triggering sources, and horizontal sweep signal sources. The specific activities being carried out by the Display Sequencer depend on the display mode called for by the control data.

Vertical deflection for crt displays comes from one or more of the four front-panel vertical inputs and, when displaying readout information, from the Readout circuitry. Signals applied to the front-panel Channel 1 and Channel 2 inputs are connected to their respective Preamplifiers via processor-controlled Attenuator networks. Control data from the Microprocessor defining the attenuation factor for each channel is serially loaded into the Auxiliary Control Register and then strobed into the Attenuator Mag-Latch Relays in parallel. The relay switches of each Attenuator network are either opened or closed, depending on the data supplied to the Mag-Latch Relay Drivers. The relays are magnetically latched and remain as set until new control data is strobed in. The Auxiliary Control Register is therefore available, and different mode data is clocked into the register to set up other portions of the instrument.

Attenuated Channel 1 and Channel 2 input signals are amplified by their respective Preamplifiers. The gain factor for the Channel 1 and Channel 2 Preamplifiers is settable by control data from the processor. The Channel 3 and Channel 4 input signals are amplified by their respective Preamplifiers by either of two gain factors set by control bits from the Auxiliary Control Register. All four of these preamplified signals are applied to the Vertical Channel Switch where they are selected by the Display Sequencer for display when required.

Each of the vertical signals is also applied to the A and B Trigger circuitry via trigger pickoff outputs from the Preamplifier stages. Any one of the signals may be selected as the trigger SOURCE for either the A or the B Trigger circuitry as directed by the Display Sequencer. The line trigger signal provides an added trigger source for A Sweeps only. Control data from the Microprocessor is written to the Trigger circuitry to define the triggering LEVEL, SLOPE, and COUPLING criteria. When the selected trigger signal meets these requirements, a sweep can be initiated. The Trigger circuit initiates both the A Sweep and the B Sweep as required by the display mode selected.

In the case of A Sweeps, the LO state of the THO (trigger holdoff) signal from the Display Sequencer enables the A Sweep circuit and the next A trigger initiates the sweep. For B sweeps, and in the case of intensified

sweeps, the A Sweep delay gate signal (DG) enables the B Sweep circuit. Depending on the B trigger mode selected, a B Sweep will be initiated either immediately (RUN AFT DLY) or on the next B trigger signal (TRIG AFT DLY). The slope of the sweep ramp is dependent on Microprocessor-generated control data loaded into the internal control register of the A and B Sweep circuit hybrids.

Sweep signals generated by each of the Sweep hybrids are applied to the Horizontal Amplifier. The Horizontal Amplifier is directed by the Display Sequencer to select one of the sweep ramps for amplification in sequence. In the case of Readout and X-Y displays, the X-Readout and CH 1 input signals are selected to be amplified, also under direction of the Display Sequencer.

To control the display intensity, the Display Sequencer directs the Z-Axis circuit to unblank the display at the appropriate time for the sweeps and readout displays. When the display is unblanked, the Display Sequencer selects the display intensity for either waveform displays or for readout displays by switching control of the Z-Axis beam current between the front-panel INTENSITY and READOUT INTENSITY potentiometers as appropriate.

During readout displays, the vertical dot-position signal from the Readout circuitry is applied to the Vertical Amplifier via the Vertical Channel Switch. Horizontal dot-position deflection for the readout display is selected by internal switching in the Horizontal Amplifier.

The vertical, horizontal, and Z-Axis signals are applied to their respective amplifiers where they are raised to crt-drive levels. The output signals from the Vertical and Horizontal Amplifiers are applied directly to the crt deflection plates. The Z-Axis Amplifier output signal requires interfacing to the high-potential crt environment before application to the crt control grid. The necessary Z-Axis interfacing is provided by the DC Restorer circuit located on the High-Voltage circuit board. The resulting display may be of waveforms, alphanumeric readout, or a combination of both.

DETAILED CIRCUIT DESCRIPTION

INTRODUCTION

The following discussion provides detailed information concerning the electrical operation and circuit relationships of the instrument. Circuitry unique to the instrument is described in detail, while circuits common in the electronics industry are not. The descriptions are accompanied by supporting illustrations and tables. Diagrams identified in the text, on which associated circuitry is shown, are located at the rear of this manual in the tabbed foldout pages.

PROCESSOR AND DIGITAL CONTROL

The Processor and Digital Control circuitry (diagram 1) directs the operation of most oscilloscope functions by following firmware control instructions stored in memory. These instructions direct the Microprocessor to monitor the front-panel controls and to send control signals that set up the various signal processing circuits accordingly.

Microprocessor

The Microprocessor (U2140) is the center of control activities. It has an eight-bit, bidirectional data bus for data display transfer (D0 through D7) and a 16-bit address bus (A0 through A15) for selecting the source or destination of the data. Precise timing of instruction execution, addressing, and data transfer is provided by an external, crystal-controlled clock signal.

The clock signal is developed by the Microprocessor Clock stage and applied to the Microprocessor at pin 39. Using the external clock as a reference, the Microprocessor generates synchronized control output signals, R/$\overline{W}$ (read-write), E (enable), and VMA (valid memory address) that maintain proper timing relationships throughout the instrument.

Microprocessor Clock

The Microprocessor Clock stage generates a 5-MHz square-wave clock signal to the Microprocessor and a 10-MHz clock signal to portions of the Readout circuitry. Inverter U2540A acts as an oscillator with crystal Y2540 providing feedback at the resonant frequency. The required phase shift for oscillation to occur is produced by C2550, C2551, R2545, and the crystal. The RC network composed of R2543, C2640, R2541, and R2542 biases input pin 1 of U2540A in the active region and establishes approximate symmetry of the oscillator output. The signal is buffered and inverted by U2540B to provide the 10-MHz clock signal.

Flip-flop U2440A is a divide-by-two circuit that reduces the 10-MHz clock down to a 5-MHz square-wave signal used to clock the Microprocessor and the Display Sequencer. The 10-MHz clock is supplied to the Readout Board for dot timing and is also available for use with option circuitry.

Reset Control

The Reset Control circuitry ensures that, at power up, the Microprocessor begins program execution from a known point in memory and with all the processor registers in known states. It also allows the processor to reset itself when power is turned off so that the instrument powers down in a known state.

POWER UP SEQUENCE. Reset generator U2240 generates the power-up reset. As power is applied to the instrument U2240 tests the voltage at U2240 pin 7. The reset generator forces U2240 pin 5 LO, and the LO is applied to the processor $\overline{\text{RESET}}$ input (pin 40). After the SENSE input reaches its nominal voltage level, the reset condition continues to allow the microprocessor system time to reset. The reset continues for the time determined by C2350. The effect of power supply transients is reduced by C2240. After the suplies reach their nominal level and the delay period ends U2240 pin 5 goes HI. The RESET signal to the processor then goes HI to enable normal execution to begin, and the processor is directed to the starting address of the power-up routine, which it then performs.

POWER DOWN SEQUENCE. When the instrument power switch is turned off, the PWR UP signal from J251 pin 12 immediately goes LO. This LO generates the NMI (non-maskable interrupt) request to the processor on pin 6 which causes the processor to branch to the power-down routine. Under direction of that routine, the processor begins shutting down the instrument in an orderly fashion before the power supply outputs can drop below the operating thresholds. This routine disconnects the CH1 and CH2 50-Ω input terminations to protect them from accidental application of excessive voltage during storage or bench handling.

As the operating voltages are falling, the Reset circuitry must not generate a false RESET signal to the processor. Such a restart when the power supply voltages are outside their normal operating range would produce unpredictable processor operation that could alter the contents of the battery backed up RAM. When the processor has completed all the other power-down tasks, it finally sets the PWR DOWN signal HI via U2310 (diagram 2). This signal is applied to inverter U2650C at pin 11. Pin 9 of U2650C goes LO and immediately pulls pin 2 of Reset Generator U2240 LO to prevent a reset to the processor. Reset Generator U2240 immediately switches state to assert the $\overline{\text{RESET}}$ signal to the processor. The $\overline{\text{RESET}}$ signal is held LO until the power supplies have fully discharged.

For diagnostic purposes, the PWR DOWN reset signal can be disabled. Moving jumper P503 to the DIAG (diagnostic) position keeps U2240 pin 2 HI. The RESET signal is therefore held HI, and the processor can execute a free-running NOP (no operation) loop without interruption if the PWR DOWN bit is set HI while the Address Bus is incrementing.

Data Bus

Tri-state buffer U2350 is used to buffer the data signals to the Microprocessor from other devices on the bus. When not enabled, the device is switched to isolate the processor from the buffered Data Bus. Buffer U2350 is enabled via the Read-Write Latch U2440B when the processor reads data from another device on the bus.

When the processor writes data onto the bus, Octal Latch U2450 is enabled by the Read-Write Latch U2440B. When the E (enable) signal at pin 11 of U2450 is HI, processor data bits are passed asynchronously through the latch to the buffered data bus. When the E signal goes LO, data bits meeting setup times are latched into the device. The latched Q outputs provide the required drive current to the various devices on the bus and ensure that data hold times are met for correct data transfer. When the Read-Write Latch places a HI on pin 1 of U2450, latch U2450 is disabled, and the outputs are switched to their high-impedance state.

Data transfers to and from the processor may be interrupted by removing Diag/Norm Jumper P503. This forces a NOP (no operation) condition that is useful for verifying the functionality of the processor (when a data-bus device is suspected of causing a system failure) or for troubleshooting the Address Bus and Address Decode circuitry. Removing the jumper removes the operating power from both U2350 and U2450 to disconnect the Microprocessor from the buffered Data Bus. With the Data Bus disconnected, a resistor network pulls the processor Data Bus lines (D0 through D7) to a NOP (no operation) instruction. A NOP causes the Microprocessor to continuously increment through its address field. The Address Decode circuitry may then be checked to determine if it is operating properly.

Address Decode

The Address Decode circuitry generates enabling signals and strobes that allow the Microprocessor to control

the various devices and circuit functions. The controlling signals are generated as a result of the Microprocessor placing specific addresses on the Address Bus. Figure 3-2 illustrates the enables and strobes generated by the Address Decode circuitry.

Address decoding is performed by a programable array logic device, a three-line-to-eight-line decoder, and a four-line-to-sixteen-line decoder attached to the Address Bus. The five most significant address bits are decoded by U2250. This device initially separates the total addressable-memory space (64K-bytes) into thirty-two, 2K-byte blocks. Addresses in the top 32K-bytes (address bit A15 HI) select one of two read-only memories (ROM), U2160, or U2260. When the VMA (Valid Memory Address) and E (Enable) outputs from the Microprocessor go HI, the selected ROM is enabled, and the data from the selected address location is read from the ROM.

The programmable array logic device also generates the $\overline{OE}$ and $\overline{WE}$ signals to the random-access memory (RAM). This RAM can be accessed with addresses 8000 to 9FFF if either PB0, PB1, or PB2 signals are HI. In this mode ROMS, U2160 and U2260 are not accessible in this address range.

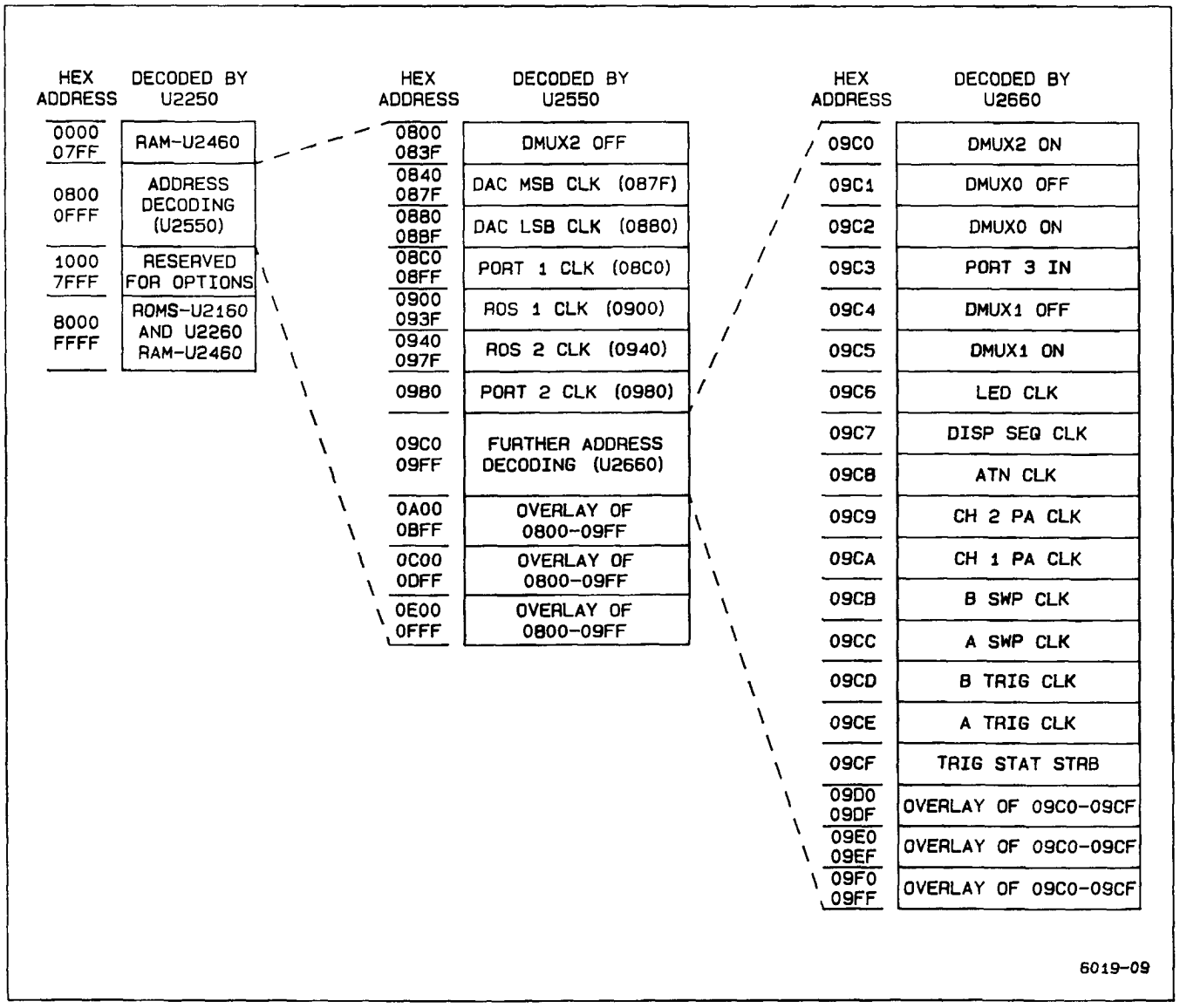

Figure 3-2. Address decoding.

Of the bottom 32K-bytes of addresses, only the lowest 4K-bytes are further decoded. Addresses in the lowest 2K-byte block of addresses will cause U2250 to generate an enable signal to the RAM, U2460. Addresses in the next 2K-byte block of addresses will enable U2550 to do the next stage of address decoding.

The level of decoding performed by U2550 uses address bits A6, A7, and A8 to separate the addresses within the 2K-byte block of addresses 0800 thru 0FFF into 32 groups of 64 addresses. Address bits A9 and A10 are not used in the decoding scheme, so each of these 32 blocks is not uniquely identified. This results in four duplicate sections within the address block, each consisting of eight groups of 64 addresses. The upper three sections in the address space are never used; therefore, decoding by U2550 may be more simply thought of as eight groups of 64 address locations. Addresses within these eight groups generate control signals to other portions of the instrument.

The final level of address decoding is done by four-line-to-sixteen-line decoder U2660. When enabled by the Y7 output of U2550, this decoder separates the highest 64-address group decoded by U2550 into 16 individual control signals. In this level of decoding, address bits A4 and A5 are not decoded, so that the 64 possible addresses consist of four overlayed blocks of 16 addresses each.

Each of the control signals generated by the Address Decode circuitry are present only as long as the specific address defining that signal is present on the Address Bus. However, one of the addressable control signals decoded by U2550 and five of the addressable control signals decoded by U2660 are used to either set or reset flip-flops U2650A, U2650B, and U2650D. The control signals are, in effect, latched and remain present to enable multiplexers U2521, U2530, (diagram 2) and U170 (diagram 4). When enabled, these multiplexers route analog control signals from DAC (digital-to-analog converter) U2101 (diagram 2) to the various analog control circuits.

Read-only Memory (ROM)

The Read-only Memory consists of one, 128K-byte ROM or two, 64K-byte ROMs that contain operating instructions (firmware) used to control processor (and thus oscilloscope) operation. Addresses from the Microprocessor that fall within the top 32K-bytes of addressable space cause one of the two read-only memory integrated circuits to be enabled. (See Address Decode description.) Instructions are read out of the enabled ROM (or PROM) IC from the address location present on its 16 address input pin (A0 through A14, Page Select). The eight-bit data byte from the addressed locations is placed onto the Buffered Data bus (BD0 through BD7) to be read by the Microprocessor.

Random-Access Memory (RAM)

The RAM consists of integrated circuit U2460 and provides the Microprocessor with 8K-bytes of battery backed up temporary storage space for data that is developed during the execution of a routine. The RAM is enabled whenever an address in the lowest 2K-byte of addresses is placed on the Address Bus or whenever an address of 8000 thru 9FFF is placed on the Address bus with either PB0, PB1, or PB2 set HI. When writing into the RAM, the write-enable signal (WE) on pin 27 of U2460 is set LO along with the chip enable (CE1) signal on pin 20. At the same time, the output-enable (OE) on pin 22 is HI to disable the RAM output drivers. Data is then written to the location addressed by the Microprocessor. If data is to be read from the RAM, the WE signal is set HI to place the RAM in the read mode, and the OE signal is set LO to enable the output drivers. This places the data from the addressed location on the buffered Data Bus where it can be read by the Microprocessor.

The RAM also provides non-volatile storage for the calibration constants and the power-down front-panel settings. When power is applied to the instrument, the Microprocessor reads the calibration constants and generates control voltages to set up the analog circuitry. The front-panel settings that were present at power-off are recalled and the instrument is set to the operating mode previous power off.

Battery Circuitry

The Battery circuit composed of BT2570, R2770, CR2770, CR2370, CR2371, and C2470 provides the standby voltage necessary to maintain the contents of the CMOS RAM (U2460). The circuit composed of R2530, U2620C, R2504, and R2506 provides the microprocessor a means of monitoring the battery voltage to detect when the battery needs to be replaced.

Timing Logic

The Timing Logic circuit composed of U2440B, and U2540F generates time- and mode-dependent signals from control signals output from the Microprocessor. The enable (E) signal output from the Microprocessor is a 1.25 MHz square wave used to synchronize oscilloscope functions to processor timing.

Data applied to the Address Bus, Data Bus, and various control signals are allowed to settle (become valid) before any of the addressed devices are enabled. This is accomplished by switching the E signal HI a short time after each processor cycle begins. Inverter U2540F inverts the polarity of the delayed enable signal and enables the Address Decode stage only after the address bus has settled.

Read-Write Latch U2440B is used to delay the processor's read/write signal (R/$\overline{W}$) from the Microprocessor to meet hold-time requirements of the RAM. At the same time, it generates delayed read and write enabling signals of both polarities to meet the requirements of Buffer U2350 and Latch U2450 (in the Microprocessor Data Bus) and various other devices in the Readout circuitry (diagram 7).

When R/$\overline{W}$ goes LO for a write cycle, Read-Write Latch U2440B is reset, and Q output (pin 9) is held LO, Latch U2450 is in its transparent state at this time, and data from the Microprocessor is applied asynchronously to the buffered Data Bus. At the end of the write cycle, the R/$\overline{W}$ signal goes HI, and the reset to U2440B is removed. The E signal also goes through a negative transition, and data on the Microprocessor data bus lines is latched into U2450. The next positive transition of the 1.25-MHz E signal (1/2 E cycle after the R/$\overline{W}$ signal goes HI) clocks the HI level at U2440B pin 12 (the D input) to the Q output, and the $\overline{Q}$ output (pin 8) goes LO. The 1/2 E cycle delay between the time R/$\overline{W}$ goes HI and the time that the Q output of U2440B goes HI keeps Latch U2450 outputs on long enough to meet the data hold time for the RAM. At the end of that delay time, pin 1 of U2450 goes HI, and the Latch outputs are switched to the high-impedance state to isolate it from the buffered Data Bus.

READOUT FRAMING AND INTERRUPT TIMING. Binary counter U2640 is used to generate a readout-framing clock to the Readout circuitry and a real-time interrupt request to the Microprocessor via inverter U2540E. The readout-framing clock is a regular square-wave signal obtained from U2640 pin 12, 14 or 15 by dividing the 1.25-MHz E signal by 512 (2^9), 1024 (2^{10}), or 2048 (2^{11}). This clock tells the readout circuitry to load the next block (subframe) of readout information to be displayed. Pin 12 is for a reduced interfere mode for TV applications, pin 14 is used for retrofitability into older 2 line instruments, and pin 15 is for newer 4 line readout instruments. (See "Readout" description for further information concerning alphanumeric display.) The real-time interrupt request, which occurs every 3.3 ms, is obtained from pin 2 by dividing the E signal by 8192 (2^{13}).

When the real-time request occurs, $\overline{IRQ}$ (pin 4 of U2140) goes LO, and the processor breaks from execution of its mainline program. The Microprocessor first resets Binary Counter U2640 by setting pin 19 of U2301 (diagram 2) HI (to generate the reset), then it resets pin 19 LO to allow the counter to start again. At this time, the Microprocessor sets analog control voltages and reads trigger status from the Display Sequencer (diagram 5). When this is completed, it reverts back to the mainline program.

In addition to the analog control and trigger status update that occurs with each interrupt, on every fifth interrupt cycle, the Microprocessor also scans the front-panel potentiometers. Every tenth interrupt cycle, scanning the front-panel switches and checking the 50-Ω DC inputs for overloads is added to the previously mentioned tasks. If all the tasks are not completed at the end of one interrupt cycle, the real-time interrupt request restarts the analog updates, but as soon as those are accomplished, the Microprocessor will pick up with its additional tasks where it was before the interrupt occurred. This continues until all tasks are completed. If any pot or switch changes are detected, the Microprocessor updates the analog control voltages and the control register data to reflect those changes prior to reverting back to the mainline program instructions.

FRONT-PANEL SCANNING and ANALOG CONTROLS

The Analog Control circuitry (diagram 2), under Microprocessor control, reads the front-panel controls and sets various analog control voltages to reflect these front-panel settings. The calibration constants determined during instrument calibration and the last "stable" front-panel setup conditions are stored in battery backed up RAM. At power-on the stored front panel information is used to return the instrument to its previous state.

Hardware I/O

Data transfer from the Analog Control circuitry to the Microprocessor is via Status Buffer U2220. Data bits applied to the input pins are buffered onto the Data Bus when enabled by the Address Decode circuitry. Via the Status Buffer, the processor is able to (1) determine the settings of front- and rear-panel pots and switches, (2) determine instrument type (2465B or 2467B), (3) determine if a triggered sweep is in progress, and (4) read the contents of the Readout RAM. When disabled, the buffer outputs are switched to high impedance states to isolate them from the buffered Data Bus.

Data transfer from the Microprocessor to the Analog Control circuitry is via registers U2210 and U2310. Via register U2210, the Microprocessor is able to select the

pot-scanning multiplexers, turn the trigger LED on and off, and control other hardware via serial control data and the attenuator strobe. Via register U2310, the processor controls pot selection, ROM addressing, and power down timing.

Front-Panel Switch Scanning

The Front-Panel Switches are arranged in a matrix of ten rows and five columns. Most of the row-column intersections contain a switch. When a switch is closed, one of the row lines is connected to one of the column lines through a diode. Reading of the switches is accomplished by setting a single row line LO and then checking each of the five column lines sequentially to determine if a LO is present (signifying that a switch is closed). After each of the five columns have been checked, the current row line is reset HI and the next row line is set LO for the next column scan cycle. A complete Front-Panel scan consists of all ten row lines LO in sequence and performing a five-column scan for each of the rows.

Row lines are set LO when the microprocessor writes a LO to one of the flip-flops in octal registers U2301 or U2201. The row data placed on the buffered Data Bus by the Microprocessor is clocked into the registers as two, eight-bit words by clocks from the Address Decode circuitry (DAC LSB CLK for the lower eight bits and DAC MSB CLK for the upper eight bits). All eight outputs of register U2201 and two outputs of U2301 drive the ten rows of the front-panel switch matrix (the fifth line of the matrix is not used). Series resistors in the lines limit current flow and eliminate noise problems associated with excessive current flow.

While each row is selected, the processor will scan each of the five column lines in sequence. To scan the columns, the processor increments three data select bits from U2301 that define the column to be checked. Eight-line data selector U2410 connects the associated column line to Status Buffer U2220. As each line is selected, the Microprocessor reads the Status Buffer to determine if the associated switch is open or closed.

In addition to the front-panel switches, the CAL/NO CAL jumper (P501) is checked to determine whether the instrument should be allowed to execute the calibration routines. The levels on U2410 pin 7 and 9 are read by scanning two additional columns at power-up. If the jumper is pulling the CAL bit LO, the operator will be allowed to use the calibration routines stored in firmware. If the NO CAL bit is pulled LO, the calibration routines may not be performed. If the jumper is removed, and neither bit is pulled LO, the Microprocessor is forced into a special diagnostic mode (CYCLE) used to record certain operating failures during long-term testing of the instrument. (See the "Maintenance" section for an explanation of the diagnostic modes.) Removing P501 or switching it between the CAL and NO CAL positions will not be recognized by the Microprocessor until the instrument is powered down and then turned back on.

The resistors in series with the input lines to U2410 are current-limiting resistors that protect the CMOS eight-line data selector from static discharges. The resistors connected from the input lines to the +5 V supply are pull-up resistors for the front-panel column lines.

Digital-to-Analog Converter (DAC)

DAC U2101 is used to set the various analog references in the instrument and is used to determine the settings of the front panel potentiometer. The 12-bit digital values to be converted are written to octal registers U2301 and U2201 for application to the DAC input pins. The DAC then outputs two complementary analog currents that are proportional to the digital input data. (Complementary, in this case, means that the sum of the two output currents is always equal to a fixed value.)

The maximum range of the output currents is established by a voltage-divider network composed of R2010, R2012, R2013, and R2011 conected to the positive and negative reference current inputs of the DAC (pins 14 and 15 respectively). A +10-V reference voltage applied to the DAC through R2013 sets the basic reference current. Resistor R2011 and potentiometer R2010 provide a means to adjust this current over a small range for calibration purposes. The nominal reference current is 1 mA, the DAC full-scale output current is 4 mA. The output currents flow through series resistors R2520 and R2521, connected to the +1.36-V reference, and proportional voltages result.

Pot Scanning

The Pot Scanning circuitry, in conjunction with the DAC, derives digital values for each of the various front-panel potentiometers. Scanning of the pots is accomplished by data selectors U2401, U2501, and U2601. Three bits are written to register U2310 and select the pot to be read. The bits are latched in the register and keep the pot selected until the register is reset. The Microprocessor writes a LO to the inhibit input pin (pin 6) of either U2401, U2501 or U2601 via register U2210 to enable the device. The enabled data selector connects the analog voltage at the wiper of the selected pot to comparator U2510.

Comparator U2510 compares the analog voltage of each pot to the output voltage from the DAC (pin 18). To determine the potentiometer output voltage, the processor performs a binary search routine that changes the output voltage from the DAC in an orderly fashion until it most closely approximates the voltage from the pot.

The conversion algorithm is similar to successive approximation and generates an eight-bit representation of the analog level. When the pot's value is determined, the Microprocessor stores that value in memory. Once all of the pots have been read and the initial value of each has been stored, the processor uses a shorter routine to determine if any pot setting changes. To do this the DAC output is set to the last known value of the pot (plus and minus a small drift value), and the status bit is read to see that a HI and LO occurs. If within the limits, the processor assumes that the pot setting has not changed and scans the next pot. When the processor detects that a pot setting has changed, it does another binary search routine to find the new value of that pot.

Analog Control

The operating mode and status of the instrument requires that various analog voltages (for controlling instrument functions) be set and updated. The digital values of the controlling voltages are generated by the Microprocessor and converted by the DAC. Analog multiplexers U2521 and U2530 (on diagram 2) and U170 (on diagram 4) route the DAC voltages to sample-and-hold circuits that maintain the control voltages between updates.

The Microprocessor writes three selection bits to register U2301 that directs the DAC output to the appropriate sample-and-hold circuit and charges a capacitor (or capacitors) to the level of the DAC. When the processor disconnects the DAC voltage from the sample-and-hold circuit (by disabling the multiplexer) the capacitor(s) remains charged and holds the control voltage near the level set by the DAC. Due to the extremely high input impedance of the associated operational amplifiers, the charge on the capacitor(s) remains nearly constant between updates.

FRONT-PANEL CONTROLS

The Front Panel is the operator's interface for controlling the user-selectable oscilloscope functions. Along with the crt, it provides visual feedback to the user about the present operating state of the instrument.

Most of the Front-Panel controls (diagram 3) are "cold" controls; i.e., they are not connected directly into the signal path. Therefore, associated circuits are not influenced by the physical parameters (such as capacitance, resistance, and inductance) of the controls. In addition, translating the analog output levels of most of the potentiometers to digital equivalents allows the processor to handle the data in ways that result in a variety of enhanced control features.

To maintain the front-panel operating setup between uses of the instrument, the digitized values of the potentiometers and front-panel switch settings are stored in battery backed up RAM so that when the instrument power is turned off, these control settings are not lost. Then, when power is next applied, the instrument will power up to the same configuration as when the power was last removed (assuming the settings of the non-digitized pots and switches remain the same).

The Front-Panel Controls also allow the user to initiate and direct the diagnostic routines (and when enabled, the calibration routines) programmed into the read-only memory (ROM). These routines are explained in the Maintenance section of this manual.

Front-Panel Switches

The Front Panel Switches are arranged in a ten-row-by-five-column matrix, with each switch assigned a unique location within the matrix (see Figure 3-3). A closed switch connects a row and a column together through an isolating diode. To detect a switch closure, the switch matrix is scanned once every 32 ms (every tenth Microprocessor interrupt cycle). When scanning, the Microprocessor sequentially sets each individual row line LO. A closed switch enables the LO to be passed through the associated diode to a column line. When the processor checks each of the five column lines associated with the selected row, the LO column is detected. The intersection of the selected row and the detected column uniquely identifies the switch that is closed. Further information about switch scanning is found in the "Front-Panel Scanning" description located in the "Analog Control" discussion.

As each switch is read, the processor compares the present state of the switch to its last-known state (stored in memory) and, if the same, advances to check the next switch. When a switch is detected as having changed, the processor immediately reconfigures the setup conditions to reflect the mode change and stores the new state of the switch in memory. The detected status of the switch on each of the following scan cycles is then compared against the new stored data to determine if the switch changes

again. The 32-ms delay between the time a switch is detected as having changed and the next time it is read effectively eliminates the effects of switching noise (switch bounce) that may occur after the switch is actuated.

Front-Panel Pots

The thirteen Front-Panel Potentiometers, READOUT INTENSITY, and INTENSITY are "cold" controls that control the linear functions of the instrument. (SCALE ILLUM and FOCUS are not considered part of the Front-Panel Control circuitry for the purposes of this description.) All are digitized and control their functions indirectly. Data Selectors U2401, U2501, and U2601 in the Analog Control circuitry (diagram 2) route the wiper arm voltage of the pot being read to comparator U2510 where it is compared with the output of DAC U2101. The processor changes the DAC output until it most closely matches the output voltage of the pot, then stores the digital value of the "match". See the "Pot Scanning" description in the "Analog Control" discussion for further information on the reading of pot values.

Like the switch matrix scanning, the Front-Panel pot scanning routine is performed every 16 ms. When entered, the routine reads the settings of the "last-moved" pot and one "unmoved" pot. Each succeeding scan continues to read the last-moved pot in addition to a new unmoved pot. In this way, each pot is monitored, but most of the scan time is devoted to the pot that is still moving (needing continuous updating).

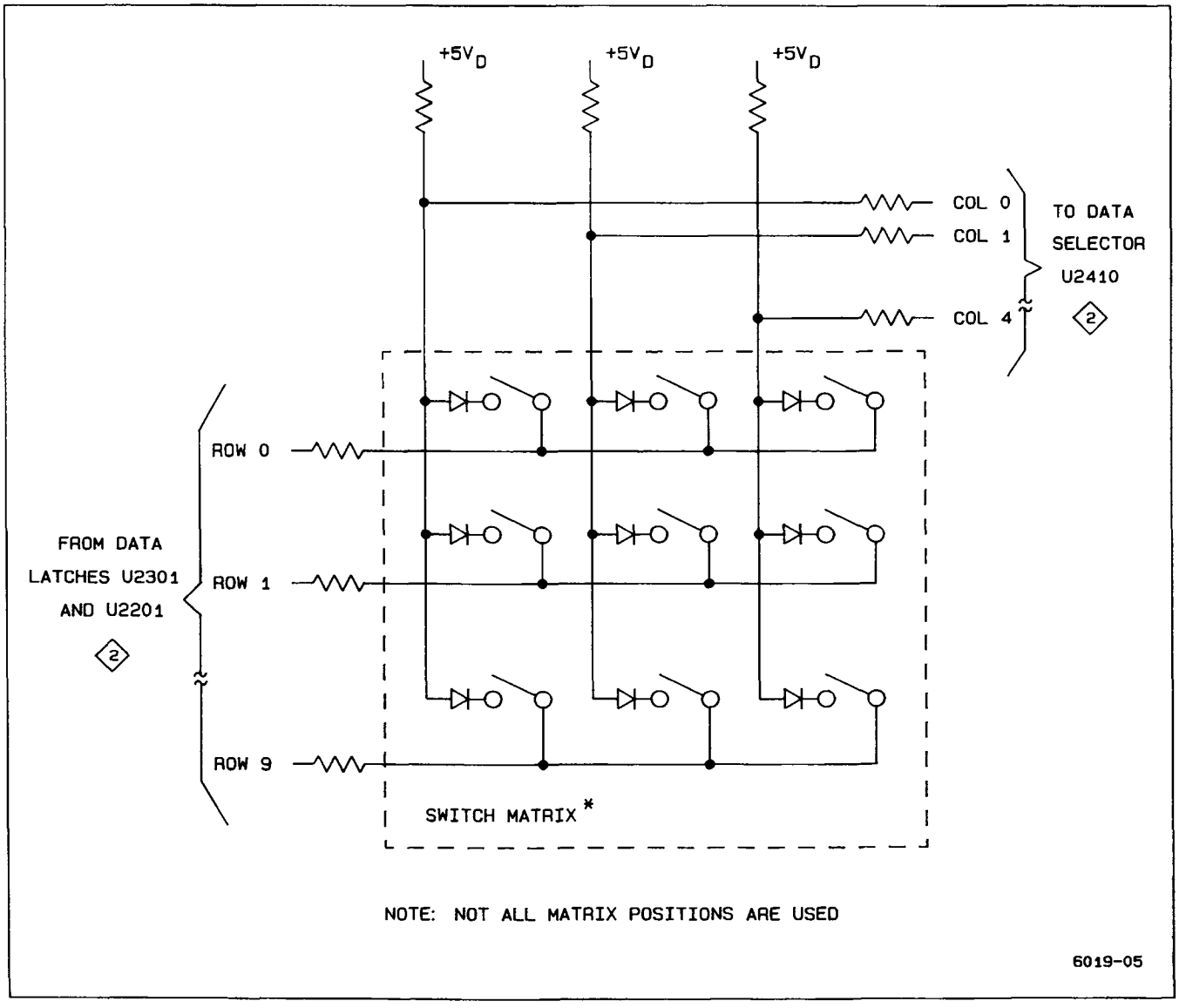

Figure 3-3. Front-panel switch matrix.

As the initial pot settings are determined, a digital representation of each value is stored in memory. The processor then checks each pot against its last-known value to determine if a pot has moved. If a pot is detected as moving, the processor executes a routine that converts the movement (displacement from last-set value) into a corresponding control voltage.

When producing the actual analog control levels, the processor can manipulate the digital values read for the various pots before sending the output data to the DAC. This allows many of the oscilloscope parameters to vary in an enhanced fashion. The pot data is manipulated by the processor in a manner that produces such features as variable resolution, continuous rotation, fine-resolution backlash, and electrically detented controls.

With all thirteen Front-Panel Potentiometers, READOUT INTENSITY, and INTENSITY controls, the processor reads the magnitude and direction of pot rotation and produces variable-resolution control voltages. If a pot's direction of rotation changes, the magnitude of the change from the last-set position remains small, or if it was not the last pot moved, a fine-resolution control voltage results. In the fine-resolution range, a given rotation displacement will cause a small control voltage change. The same displacement farther away from the last-set reference will cause a proportionally larger control voltage change, producing a coarse-resolution effect. If the changing pot is the last one moved and the direction of rotation remains the same, the algorithm continues from where it left off during the preceding scan; producing control voltage changes with the same increment as it was last using.

The delta reference controls (Δ REF OR DLY POS and Δ) are continuous-rotation potentiometers. They each consist of two pots ganged together with their wiper arms electrically oriented at 180° apart. As the wiper of one pot is leaving its resistive element, the wiper of the other pot comes onto its element. The Microprocessor has the ability to watch the output voltage from each wiper and when it detects that the controlling wiper is nearing the end of its range, it will switch control over to the other wiper. The routine the processor uses to watch these pots sets the associated control voltage on the basis of relative voltage changes (ΔV) that occur. Switching between the pots to change control to the opposite wiper arm is based on specific voltage levels being sensed.

Sensing specific voltage levels is also used when reading the VOLTS/DIV VAR, SEC/DIV VAR, and HOLDOFF controls. These pots have both a mechanical detent and a processor-generated electrical detent. As one of these controls is moved out of the mechanical detent position, the processor watches the analog voltage changes that occur; but the associated control voltage will not change until a specific voltage level (the electrical detent level) is reached. Once the electrical detent value is exceeded, the processor begins to vary the associated control voltage in response to further pot rotation. When returning to the mechanical position, the electrical detent level is reached first, and the variable voltage action is stopped before the mechanical detent is entered.

Front-Panel Status LEDs

Light-emitting diodes (LEDs) are used to provide visual feedback to the operator about the oscilloscope status and operating mode by backlighting front-panel nomenclature. A 48-bit status word, defining the diodes to be illuminated, is generated by the processor and then serially clocked into the six LED-Status Registers (U3001, U3002, U3003, U3004, U3005, and U3006). The registers hold the selected diodes on until the next update. Whenever the processor detects that a front-panel control has changed (and a new status display is required), a new status word is generated and applied to pin 1 of U3002. As each of the bits is clocked into the Q_A position of U3002, the preceding bit is shifted to the next register position. After 48 bits have been clocked into (and 40 bits through) U3002, all six LED-Status registers are full and contain the LED illumination pattern to be displayed to the user. A LO at any Q output of the registers illuminates the corresponding front-panel LED.

The TRIG'D LED is not driven by the LED-Status Register. It is driven by the Analog Control circuitry and illuminated whenever a triggered sweep is in progress.

ATTENUATORS AND PREAMPS

The Attenuators and Preamps circuitry (diagram 4) allows the operator to select the vertical deflection factors. The Microprocessor reads the Channel VOLTS/DIV switches and VOLTS/DIV VAR controls and then digitally switches the attenuator and sets the preamplifier gains accordingly.

CHANNEL 1 AND CHANNEL 2 ATTENUATORS

The Channel 1 and Channel 2 Attenuators are identical in operation, with corresponding circuitry in each channel performing the same function. Therefore, only the Channel 1 circuitry is described.

Input signals from the Channel 1 input connector are routed through an attenuator network by four pairs of magnetic-latch relay contacts. The position of the relays is set by Microprocessor data placed into Auxiliary Control Register U140. Relay buffer U110 provides the necessary drive current to the relays.

Four input coupling modes (1MΩ AC, GND, 1MΩ DC, and 50 Ω DC) and three attenuation factors (1X, ÷10, and ÷100) may be selected by closing different combinations or relay contacts. The three attenuation factors, along with the variable gain factors of the Vertical Preamplifier, are used together to obtain the crt deflection factors. The relays are magnetically latched and once set, remain in position until new attenuator-relay-setting data and strobes are generated. (See the "Auxiliary Control Register" description for a discussion of the relay-latching procedure.)

The 50 Ω termination resistor has a thermal sensor associated with it that produces a dc voltage (CH 1 OVL) proportional to the input power. Should the input power exceed the normal safe-operating level for the 50 Ω DC input, the termination resistor temperature will exceed the normal operating limit and change the output voltage of the thermal sensor. The amplitude of this dc level is periodically checked via comparator U2510 and DAC U2101 (on diagram 2) and allows the Microprocessor to detect when an overload condition is present. When an overload occurs, the processor switches the input coupling to the 1 MΩ position to prevent damage to the attenuator and displays 50 Ω OVERLOAD on the crt.

Compensating capacitor C105 is adjusted at the time of calibration to normalize input capacitance of the preamplifier to the attenuator.

A probe-coding ring around the BNC input connector passes probe coding information (a resistance to ground) to the Analog Control circuitry for detection of probe attenuation factors. The readout scale factors are set to reflect the detected attenuation factor of the attached probe.

Auxiliary Control Register

The Auxiliary Control Register allows the Microprocessor to control various mode and range dependent functions of the instrument. Included in these functions are: attenuation factors, input coupling, Channel 3 and Channel 4 gains, vertical-bandwidth limiting, the X-Y display mode, and the state of the measurement PAL.

When the Microprocessor sets the input coupling mode and attenuation factors for Channel 1 and Channel 2, a series of eight, 16-bit control words are serially clocked into shift registers U140 and U150 (eight bits in each register). Each control word is used to set the position of one of the eight attenuator and coupling relays (four relays are in each attenuator assembly). Each control word will have one HI bit. This bit will correspond to the specific relay contact to be closed. Relay buffers U110 and U130A (for Channel 1) and U120 and U130B (for Channel 2) are Darlington configurations that invert the polarities of all bits. This results in a LO being applied to only the coil lead associated with the contact to be closed; all other coil leads are held HI.

To set a relay once the control word is loaded, the Microprocessor generates a ATTN STRB (attenuator strobe) to U130G pin 7 via R129 and C130. The strobe pulses the output of U130G LO for a short time. This output pulse attempts to turn on both Q130 and Q131 (relay drivers) via their identical base-bias networks. Due to the lower level from the turned on Darlington relay buffer (coupled through the associated coil diode and either CR130 or CR131 to one of the bias networks), one transistor will turn on harder as the ATTN STRB pulse begins to forward bias the transistors. The more positive collector voltage of the transistor turning on harder is fed through the bias diode (again either CR130 or CR131) to further turn off the opposite transistor. This action results in one transistor being fully on and the other one being fully off. The saturated transistor sources current through the two stacked relay coils to the LO output of either U140 or U150 (current sink) to close the selected contacts. Once set, the magnetic-latch feature will hold the relay set to this position until opposing data is clocked into the Auxiliary Control Register and strobed into the relay. All coil leads for the remaining relays are set HI, and only the selected relay will be set.

To set the seven remaining Attenuator and coupling relays, the sequence just described is repeated seven more times. Whenever the Microprocessor determines that the attenuation factor or input coupling has changed, the entire relay-setting procedure is repeated for all eight relays.

After the coupling and attenuator relays have been latched into position, the Auxiliary Control Register is free to be used for further circuit-controlling tasks. Eight more bits of control data are then clocked into U140 either to enable or disable the following functions: vertical bandwidth limiting (BWL), triggered X-Y mode (TXY), the A and B Sweep Delay Comparators (BDCA and BDCA), and slow-speed intensity limit (SIL); or to alter the Channel 3 and Channel 4 gain factors (GA3 and GA4). Four other

bits are clocked into register U150: one to produce the CTC signal, one to control the scale illumination circuit during SGL SEQ display mode, and two (CNTL1 and CNTL2) to control the state of the measurement PAL, U975. The CTC control bit is used to enable a sweep-start linearity circuit in the A Sweep circuitry (diagram 5) on the 2 ns and 20 ns per division sweeps.

Analog Control Demultiplexer

When enabled by the Address Decode circuitry, Analog Control Demultiplexer U170 directs the analog levels applied to pin 3 from DAC U2101 (diagram 2) to one of six sample-and-hold circuits. In the Preamplifier circuitry, the sample-and-hold circuits maintain the VAR gain and DC Bal control-voltage levels applied to both the Channel 1 and Channel 2 Preamplifiers U100 and U200 between updates. Two of the Demultiplexers outputs direct analog levels to the Holdoff and Channel 2 Delay offset sample-and-hold circuits (diagram 5). Routing is determined by the three-bit address from register U2301 (diagram 2) applied to Demultiplexer U170 on pins 9, 10, and 11.

Channel 1 Preamplifier

Channel 1 Preamplifier U100 converts the single-ended input signal from the Channel 1 Attenuator to a differential output signal used to drive the Vertical Channel Switch. The device produces either amplification or attenuation in predefined increments, depending on the control data written to it from the Microprocessor. The preamp also has provisions for VAR gain, vertical positioning, and a trigger signal pickoff.

The Channel 1 vertical input signal is applied to pin A of Channel 1 Preamplifier U100. Control data from the processor is clocked into the internal control register via pin 22 (CD) by the clock signal applied to pin 23 ($\overline{CC}$). The data sets the device to have an input-to-output gain ratio of 2, 4, or 10, depending on the VOLTS/DIV control setting.

Two analog control voltages set by DACs modify the differential output signal at pins 9 and 10. The front-panel Channel 1 POSITION control supplies a position signal to U100 pin 17 (via MUX U2530 and sample-and-hold U2430 and C2432) that vertically positions the Channel 1 display on the CRT. A DC Bal signal is applied to pin 2 of U100 from MUX U170 via the sample-and-hold circuit composed of U160A and C177. This DC BAL signal is a dc offset-null level that is determined during the automatic DC Bal procedure. The offset value is stored as a calibration constant in RAM and is recalled at regular intervals to set the DC Bal level, holding the Preamplifier in a dc balanced condition.

The Channel 1 VOLTS/DIV VAR control is monitored by the Microprocessor during the front-panel scanning routine. When the processor has determined where the VOLTS/DIV VAR control is positioned, it causes DAC U2101 (diagram 2) to produce a corresponding control level and routes it to the VAR gain sample-and-hold circuit composed of U160D, C179, and associated components. The control voltage at the output of U160D (pin 14) sets the variable gain of the Preamplifier.

A pickoff amplifier internal to U100 conditions the trigger signal and provides the proper signal level at pin 15 to drive the A/B Trigger Generator (U500, diagram 5). The pickoff point for the trigger signal is prior to the addition of the vertical position offset, so the position of the signal on the crt has no effect on the trigger operation. However, the pickoff point is after the DC Bal and Variable gain signals have been added to the signal so both of these functions will affect trigger operation.

Common-mode signals are rejected from the trigger signal by the circuitry composed of operation amplifier U450B and associated components. The inverting input of U450B (pin 6) is connected to the common-mode point between APO+ (pin 12) and TPO− (pin 15) of U100. Any common-mode signals present are inverted and applied to a common-mode point between R451 and R453 to cancel the signals from the differential output. A filter network composed of LR 180 and the built-in circuit board capacitor (5.6 pF) reduces trigger noise susceptibility. Trigger signals for options are obtained from J100.

The Channel 1 input signal used to provide the horizontal deflection for the X-Y displays is obtained from U100 pin 11. The components between pin 11 and the Horizontal Output Amplifier provide phase compensation of the signal. During instrument calibration, the delay produced by C115, C116, L115, R115, and variable capacitor C118 is matched to the 78-ns delay of the vertical delay line (DL100, diagram 6).

Channel 2 Preamplifier

Operation of Channel 2 Preamplifier U200 is nearly identical to that of the Channel 1 Preamplifier just described. The exceptions are that the output polarity of the Channel 2 signal may be either normal or inverted and that the signal obtained from the BPO+ output (pin 11) is conditioned differently for a different purpose than in the Channel 1 Preamplifier circuitry.

Inverting the Channel 2 signal for the CH 2 INVERT feature is accomplished by biasing on different amplifiers. The control data clocked into the internal control register from pin 22 sets up the necessary switching.

The Channel 2 BPO+ signal at U200 pin 11 provides an accurate representation of the Channel 2 signal at the rear-panel CH 2 OUT connector.

Channel 3 and Channel 4 Preamplifier

The functions provided by the Channel 3 and Channel 4 Preamplifier are similar to those provided by the Channel 1 and Channel 2 Preamplifiers. The single-ended CH 3 and CH 4 input signals are converted to differential signals, and vertical gain and vertical positioning are added to the output signals. Trigger pickoff signals are generated for both channels and are routed to the Trigger hybrid.

Channel 3 and Channel 4 gains may be either 0.1 volt per division or 0.5 volt per division. The logic levels of control bits applied to U300 pin 30 (GA3) and pin 31 (GA4) from Auxiliary Control Register U140 sets the gain of the Channel 3 and Channel 4 preamplifiers respectively. Vertical positioning of the Channel 3 and Channel 4 signals on the crt is controlled by the voltage levels applied to pin 29 (POS3) and pin 32 (POS4) from the front-panel CH 3 and CH 4 POSITION potentiometers (via MUX U2530 and sample-and-hold amplifiers U2430C and C2333 and U2430D and C2332).

Dc offsets in the output signal due to any tracking differences between the +5-V and the −5-V supply to U300 are reduced by the tracking regulator circuit composed of U165A, Q190, and associated components. Operational amplifier U165A and Q190 is configured so that the output of voltage at the emitter of Q190 follows the −5-V supply applied to R198. This tracking arrangement ensures that the supply voltages are of equal magnitudes to minimize dc offsets in the output signals.

Scale Illumination

The Scale Illumination circuit consists of U130C, U130D, U130E, U130F, and associated components. The circuit enables the operator to adjust the illumination level of the graticule marks on the crt face plate using the SCALE ILLUM control.

Components U130C through U130F, depicted on diagram 4 as inverters, are actually Darlington transistor pairs. Figure 3-4 is a simplified illustration of the Scale Illumination circuitry, redrawn to show U130C through 130F as Darlington transistor pairs for the purpose of the following description.

Darlington transistors U130D and U130E control the current flow to scale-illumination lamps DS100, DS101, and DS102. Base drive current for U130D and U130E via R133 is set by the front-panel SCALE ILLUM pot R134. Voltage at the more negative end of the pot is set by the self-biasing configuration of U130F and R135. The voltage level established by these two components is two diode drops above ground (≈ 1.2 V) so that, at full counterclockwise rotation, the wiper voltage of the SCALE ILLUM pot will just match the turn-off point of U130D and U130E. The voltage at the other end of the pot is set by the collectors of U130D and U130E. As the SCALE ILLUM pot is advanced, the base drive to U130D and U130E increases, and the voltage on their collectors moves closer to ground potential. This increases the current through the scale-illumination lamps to make them brighter and produces some negative feedback to the base circuit through the SCALE ILLUM pot. Negative feedback stabilizes the base drive to U130D and U130E to hold the illumination level constant at the selected setting of the SCALE ILLUM control.

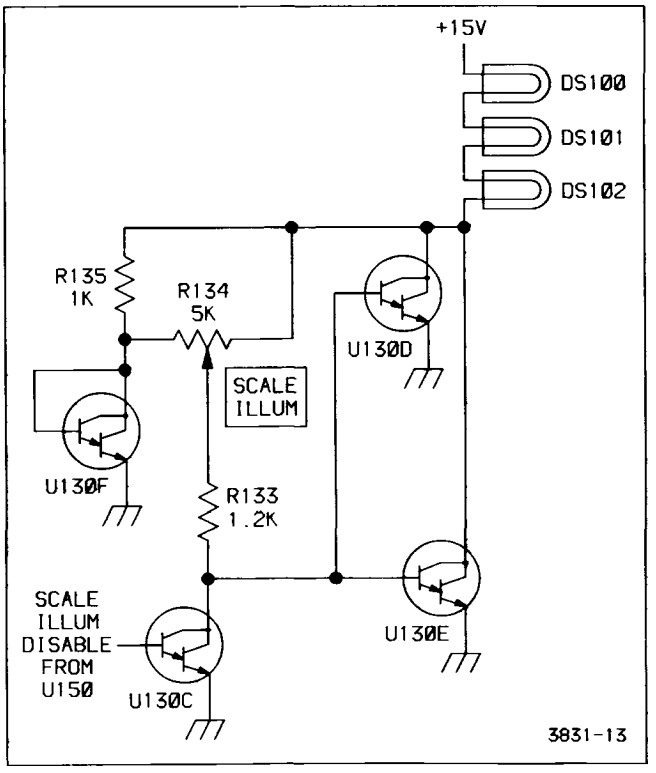

Figure 3-4. Scale illumination circuit.

During SGL SEQ display mode, the graticule is illuminated only once during the sequence for photographic purposes. In this mode, a HI is initially written to Auxiliary Control Register U150 (bit Q_H). This turns on U130C and shunts the base drive current of U130D and U130E to ground. At the point in the sequence when the graticule should be illuminated, the processor writes a LO to bit Q_H, and Q130C is turned off. This enables U130D and U130E to turn on the lamps to the illumination level set by the SCALE ILLUM pot.

DISPLAY SEQUENCER, TRIGGERS, AND SWEEPS

The Display Sequencer circuitry (diagram 5) controls and sequences the "analog-type" oscilloscope functions in real time, dependent on control data it receives from the Microprocessor. The A/B Trigger circuitry, under control of the Display Sequencer, detects when triggering requirements are met and initiates the appropriate sweep. The A Sweep and B Sweep circuits generate sweep ramps under control of the Display Sequencer when triggered by the A/B Trigger circuitry.

Display Sequencer

The Display Sequencer consists primarily of integrated circuit U650. This IC accepts analog and digital control signals from various parts of the instrument and, depending on the control data string clocked into its internal control register from the Microprocessor, will change control signals that it sends to other, signal-handling circuits.

In the course of developing waveform displays, the Display Sequencer selects one or more vertical channels, sets the trigger source, and selects the horizontal display mode. In most cases, the trigger selection does not change after it has been set unless a front-panel trigger control is changed. An exception is that in VERT TRIGGER MODE, the trigger source tracks the sequencing of the vertical channels (unless AUTO LVL MODE, or CHOP VERTICAL MODE is also selected). Trigger source selection lines are changed only during trigger holdoff time between sweeps.

Fifty-five bits of serial data from the processor defining the instrument's operating sequence are applied to the Display Sequencer data input, pin 25. The data string is clocked into U650 to the internal control register by the processor-generated control clock applied to pin 24. The data string is organized in several fields, with each field defining the operating mode of one specific instrument function.

Display Sequencer U650 controls the various functions defined by the data fields by setting the levels of the associated control lines. The functions and controlling signal lines for each function are as follows:

VERTICAL DISPLAY SELECTION. CH 1, CH 2, CH 3, CH 4, ADD, and Readout Y signals are selected by the $\overline{VS1}$, $\overline{VS2}$, $\overline{VS3}$, and $\overline{VS4}$ control signals. See the Vertical Channel Switch description for further information.

HORIZONTAL DISPLAY SELECTION. A Sweep, B Sweep, CH 1 (for X-Y displays) and Readout X are selected by the $\overline{HSA}$ and $\overline{HSB}$ control signals. See the Horizontal Output Amplifier description for further information.

TRIGGER SOURCE SELECTION. CH 1, CH 2, CH 3, CH 4, ADD, Line, and a sample of the vertical output signal (for calibration purposes only) are selectable as the Trigger SOURCE by the $\overline{SR0A}$, $\overline{SR1A}$, $\overline{SR2A}$, $\overline{SR0B}$, $\overline{SR1B}$, and $\overline{SR2B}$ control lines (pins 28, 27, 29, 32, 31, and 30 respectively). See the A/B Trigger description for further information.

TRIGGER HOLDOFF. Sweep recovery time and the circuit initialization time required when front-panel controls are changed are controlled by the THO (trigger holdoff) signal.

DELTA TIME (Δt) DELAY SELECTION. DLY REF 0 or DLY REF 1 is selected by the $\overline{DS}$ (delay select) signal.

TRIGGER and SWEEP ACTIVITY (STATUS). The activity of the Trigger and Sweep circuits, as indicated by the $\overline{SGA}$, $\overline{SGB}$, $\overline{TSA}$, and $\overline{TSB}$ lines, is reported to the Microprocessor via the TSO (trigger status output) line when clocked by the $\overline{TSS}$ (trigger status strobe) signal.

INTENSITY CONTROL. The readout intensity, display intensity, and display intensity compensation are controlled by the BRIGHT output level.

DISPLAY BLANKING. Display blanking for CHOP VERTICAL MODE, Readout transitions, and front-panel control changes is controlled by the BLANK output.

READOUT CONTROL. The vertical selection, horizontal selection, and intensity controls are all set to their readout modes either at the end of an A Sweep ($\overline{SGA}$ goes HI) or in response to a readout request ($\overline{ROR}$) from the Readout circuitry (diagram 7). While in the readout mode,

the BLANK control signal is driven by the readout blank ($\overline{ROB}$) input signal on pin 5 (also from the Readout circuitry). The readout active line ($\overline{ROA}$, pin 6), when set LO, tells the Readout circuitry that readout dots may be displayed if necessary. The $\overline{ROA}$ signal is always set LO at the start of the trigger holdoff time following sweeps, and it is held there until the holdoff time is almost over. This allows the majority of holdoff time to be used for displaying readout dots. The Display Sequencer will switch the $\overline{ROA}$ signal back to HI before the end of holdoff so that the readout display does not interfere with display of the vertical signal at the triggering event.

TRACE SEPARATION. Vertical separation between the A Sweep trace and the B Sweep traces (for alternate horizontal sweep displays), and between the reference B Sweep trace and the delta B Sweep trace (when delta time is selected in B Sweep only mode), is enabled by the TS1+TS2 output.

X10 HORIZONTAL MAGNIFICATION. Horizontal X10 magnification is controlled by the $\overline{MAG}$ output.

CALIBRATOR TIMING. The 5-Hz to 5-MHz drive signal to the Calibrator circuitry is provided by the CT output.

DELAY GATE OPERATION. Analog Switches U850B and U850C select the delay references for each sweep. Depending on the display mode and point in the display sequence, the DS control signal (U650 pin 40) routes one of the two analog delay references through U850B and U850C to the two sweep hybrids. The selected reference level is compared against the changing sweep ramp voltages to generate the delay gates that control each sweep's functions.

After an A Sweep has been initiated by a trigger, a delay gate circuit within U700 compares the A Sweep ramp voltage to the selected delay reference. When the sweep ramp reaches the delay reference level, the DG (delay gate) output goes LO, enabling the B trigger portion of U500 and B Sweep hybrid U900. Then, when B triggering occurs (for TRIG AFT DLY mode), the A/B Trigger hybrid sets the $\overline{TGB}$ (trigger gate B) signal LO, initiating the B Sweep. In RUN AFT DLY mode, however, the $\overline{TGB}$ signal to U900 is held LO, and the B Sweep is initiated at the end of the A Sweep delay time when the A Sweep delay gate goes LO.

STATUS MONITORING. As the Display Sequencer controls the display system in real time, it continually monitors the trigger and sweep operations and updates the internal trigger status register accordingly. The Microprocessor checks the contents of this register every 3.3 ms to determine the current status of the trigger and sweep circuitry. The Microprocessor reads the trigger status register by generating a series of trigger status strobe ($\overline{TSS}$) pulses (U650 pin 19) to serially clock the contents of the register out to the TSO (trigger status output) line and onto the Data Bus (via Status Buffer U2220 on diagram 2). The system status information obtained by this check is used for AUTO LVL triggering, AUTO free-run triggering, detecting the completion of all sweeps in a SGL SEQ display, automatic measurement functions, and during instrument calibration.

INTENSITY CONTROL. The Display Sequencer controls the intensity for both sweep and readout displays. The analog levels at pins 22 and 23 determine the basic intensity level of the displays. Two internally generated DAC currents (developed by multiplying the IREF current at pin 20 by two processor-generated numbers stored internally) are added to the basic intensity level currents to produce the display intensity seen on the crt (see Table 3-1). The two DAC currents added to the INTENSITY current are dependent on sweep speed, number of channels being displayed, and whether or not the X10 MAG feature is in use. These added currents increase crt beam current and hold the display intensity somewhat constant under the varying display conditions. The resulting current is applied to Z-Axis Amplifier U950 (diagram 6) from the BRIGHT output of the Display Sequencer (pin 21).

To produce the intensified zone on the A Sweep trace for A intensified by B Sweep displays, an additional current is added to the crt drive signal by the Z-Axis Amplifier during the concurrence of the $\overline{SGAZ}$ and $\overline{SGBZ}$ (sweep gate A and B z-axis) signals.

The readout intensity (ROI) level, controlled from the front-panel READOUT INTENSITY pot (via MUX U2530 and sample-and-hold U2630A and C2732). The Microprocessor increases readout intensity when the pot is rotated either direction from center. Minimum readout intensity current occurs at the midpoint of the READOUT INTENSITY pot rotation. The Microprocessor also detects to which side of center the READOUT INTENSITY control is set. Depending on the status received, the processor sets up the Readout circuitry (diagram 7) to display either all of the readout information or just the "delta type" readouts.

Blanking of the crt display during CHOP VERTICAL MODE displays or when switching between dot positions in the readout displays is controlled by the Display Sequencer's BLANK output (pin 3). When the signal is LO, the crt z-axis is turned on to the selected intensity level; when HI, the crt display is blanked.

Table 3-1
Intensity Control

Type of Display	Horizontal Selects		Resulting Current at BRIGHT Output
	HSA	HSB	
X/Y	LO	LO	DI (display intensity) only
A Sweep	LO	HI	DI + A SWP DAC current
B Sweep	HI	LO	DI + B SWP DAC current
Readout	HI	HI	ROI (readout intensity) only

READOUT CONTROL. The readout request signal ($\overline{ROR}$), the readout active signal ($\overline{ROA}$), and the readout blank signal ($\overline{ROB}$) control readout displays. During the first part of the holdoff time, up until one or two holdoff ramps before holdoff time ends (dependent on the sweep rate), the Display Sequencer sets the $\overline{ROA}$ signal line LO. While the $\overline{ROA}$ line is LO, the Readout circuitry may display readout character dots if necessary. During readout displays, the horizontal and vertical select signals ($\overline{HSA}$, $\overline{HSB}$, $\overline{VS1}$, $\overline{VS2}$, $\overline{VS3}$, and $\overline{VS4}$) are all set HI. This deselects the waveform-related sweep and deflection signals and gives display control to the Readout circuitry. While readout information or cursors are being displayed, the BLANK output signal (pin 3) is controlled by the readout blank ($\overline{ROB}$) signal from the Readout circuitry, and the readout intensity (ROI) signal pin (pin 23) controls the BRIGHT output level.

During holdoff, the Display Sequencer always sets the readout active ($\overline{ROA}$) line LO. As previously described, setting the $\overline{ROA}$ signal LO allows the Readout circuitry to display readout dots. In some settings of the SEC/DIV switch, with adequate trigger rates, holdoff time is provided for the Readout circuitry to display all the readout information without causing noticeable display flicker.

In those cases where the holdoff time is insufficient to prevent flicker, a portion of the Readout circuitry will request display control by setting the readout request ($\overline{ROR}$) signal LO. The Display Sequencer recognizes all readout requests immediately and switches the horizontal and vertical select lines to the readout display mode. The Readout circuitry displays one readout dot and then resets the readout request HI to switch back to the display of waveforms. Readout requests occur as required during sweep times, keeping the readout display up to date. (See "Readout" description for further information).

TRACE SEPARATION. The TRACE SEP feature is used to position the alternate B Delayed Sweep trace downward from the A Sweep when Alternate Horizontal Display Mode (TURN-ALT) is active. It is also used when either the Δt or 1/Δt measurement function is used with B Sweep only displays. In the latter case, the TRACE SEP control vertically positions the trace(s) associated with the Δ control.

When the Display Sequencer determines that trace separation should be active, the LO TSIN level at pin 7 is routed to pins 9 and 8, the TS1 and TS2 outputs (connected together). This LO output turns off transistor Q600 (diagram 6), thereby enabling the trace separation voltage from the front-panel TRACE SEP pot (via MUX U2530 and sample-and-hold U2630C and C2631) to be applied to pin 42 of Vertical Output Amplifier U600. To disable the trace separation function, the Display Sequencer sets the TS1 + TS2 control line HI, turning on Q600 and shunting the trace separation signal to ground.

X10 MAG SELECT. The $\overline{MAG}$ (sweep magnifier) output (pin 39) drives the magnifier control input (pin 14) of Horizontal Output hybrid U800 and the select input (pin 9) of analog switch U860C (diagram 6). Analog switch U860C routes a magnifier gain-control voltage to the Horizontal Amplifier to set the horizontal gain for the X10 magnified displays.

CH 2 DELAY OFFSET. The $\overline{VS2}$ (vertical select, channel 2) output applied to analog switch U860B at pin 10 routes a calibrated offset voltage from sample-and-hold buffer U165D to both sweep hybrids when the Channel 2 vertical signal is being displayed. The offset voltage is used to eliminate the apparent propagation delay between the Channel 2 and the Channel 1 (or CH 2 and either one of the other channels). A step in the calibration procedure allows use of the front-panel Channel 2 Delay Offset feature to be either enabled or disabled. When enabled, the Channel 2 offset may be adjusted up to ±500 ps (with respect to Channel 1) using the Δ control.

CALIBRATOR TIMING. The Calibrator timing signal (CT) from the Display Sequencer is generated by an internal counter. The counter divides the 5-MHz clock input at pin TC (timing clock) by a value that is a function of sweep speed. The resulting square-wave output signal drives the Calibrator circuit. For ease of sweep rate verification, the Calibrator signal provides a display of five complete cycles on the crt at sweep speeds from 100 ms per division to 0.1 μs per division. Below 100 ms per division, the Calibrator output frequency remains at 5 Hz; and above 0.1 μs per division, the Calibrator frequency remains at 5 MHz.

When chopping between vertical channels, the Display Sequencer adds a 200-ns skew at the end of some sweeps to desynchronize the chop frequency from the sweep speed (to prevent the sweep from locking onto the chop frequency). Due to this, the Calibrator signal has an irregular pulse repetition characteristic between sweeps. This will not be apparent when observing the Calibrator signal on the instrument crt since the skew is synchronized to the sweep, but may be observed when the Calibrator output signal is used with other instrumentation. The skew can be eliminated by setting the instrument to SGL SEQ Mode (to shut off the sweeps).

Holdoff Circuitry

The holdoff circuit, used to delay the start of a sweep until all circuits have recovered from the previous sweep, is made up of U165C, Q154, Q155, and associated components. Operational Amplifier U165C and capacitor C180 form a sample-and-hold buffer used to set the charging current for holdoff-ramp integrating capacitor C171 (C660 for the 2467B). A control voltage from digital-to-analog converter (DAC) U2201 (diagram 2) via multiplexer U170 (diagram 4) is stored on C180. The stored voltage level sets the base voltage for both Q154 and Q155 via amplifier U165C. Transistors Q154 and Q155 form a current-mirror with nearly equal collector currents. Transistor Q154 is a current-to-voltage converter that provides negative feedback to U165C, setting loop gain. Transistor Q155 acts as a constant-current source that charges integrating capacitor C171 (C660 for the 2467B), producing a linear holdoff ramp.

A comparator circuit in U650 detects when the ramp crosses a predefined threshold voltage (approximately +3 V). When the threshold is reached, pin 10 of U650 (HRR) goes LO and the integrating capacitor is discharged. At that same time, an internal counter that keeps track of the holdoff ramp cycles is incremented. The ramps continue to be generated and reset until the holdoff ramp counter has counted the number of ramp cycles defined by the sweep-rate-dependent holdoff data field stored in the Display Sequencer control register. At all sweep speeds except 5 ns per division, the count is at least two holdoff ramp cycles. The front-panel variable HOLDOFF control affects holdoff time by varying the HOLDOFF control voltage to U165C (from the DAC), changing the charging rate of integrating capacitor C171 (C660 for the 2467B).

When holdoff time requirements are met (determined by the number of ramps counted), the Display Sequencer sets the THO (trigger holdoff) signal LO. This enables both the A Sweep hybrid (U700) and the A Trigger circuitry in U500. The Trigger circuit begins monitoring the selected trigger source line and, when a triggering event is detected that meets the triggering requirements defined by the stored control data, initiates the A Sweep and sets the $\overline{\text{TSA}}$ (trigger status, A Sweep) line to Display Sequencer U650 LO (indicating that the A Sweep has been triggered).

As the A Sweep circuit (U700) responds to the trigger, it sets the $\overline{\text{SGA}}$ (sweep gate A) line LO (via U980A) indicating that an A Sweep is in progress. After the sweep has run to completion, U700 sets the $\overline{\text{SGA}}$ line HI signaling the end of sweep. The Display Sequencer then sets the THO line HI, resetting A/B Trigger hybrid U500 and A Sweep hybrid U700 in preparation for the next sweep.

HOLDOFF BOARD (2467B ONLY). Holdoff ensures that the sweep generator fully recovers between successive sweeps. It inhibits the sweep and trigger for a specific holdoff time after each sweep. The Display Sequencer (U650) sets THO (Trigger HOldoff, pin 13) high, which resets and inhibits both the A trigger and the A sweep. Then, after the holdoff time elapses, THO is set low, enabling the A trigger and A sweep to respond to the next trigger event. The Display Sequencer and external circuitry form a holdoff timer.

The holdoff timer operates only while $\overline{\text{SGA}}$ (not Sweep Gate A, at the base of Q159) is high. Holdoff time is proportional to a number of holdoff-timer cycles, counted by the Display Sequencer, according to the selected sweep speed. A capacitance and a charging current determine the duration of each holdoff-timer cycle. The HOLDOFF control varies the current to adjust the cycle duration in the range from about 1 μs to about 15 μs.

The circuit comprising operational amplifier U165C and transistors Q154 and Q155 generates the charging current for the holdoff timing capacitors C660, C169, C173, and C174. When the voltage on C174 rises above +5 V, comparator U168B drives the HRR terminal of the Display Sequencer U650 high, through emitter follower Q158, diode U1169H, diode-connected Q161, and R177. C172 also charges to about +4 V. The Display Sequencer then drives HRR back to ground and counts one holdoff-timer cycle. Stored charge in the base-collector junction of diode-connected Q161 supplies the high current needed to rapidly switch HRR from low to high and R177 limits the current required from U650 to drive HRR back from high to low. When HRR is driven below the voltage on C172, comparator U168A discharges C660, C169, C173, and C174.

When both the output of comparator U168A is low and $\overline{\text{SGA}}$ is high, Q157, R179, R178, and U169F form a current mirror. This establishes a discharge current for C169, proportional to the charging current from the collector of Q155, and normalizes the operation of the circuit for all settings of the variable HOLDOFF control.

Triggers

The A/B Trigger hybrid (U500) and associated circuitry select the triggering signal source for each horizontal sweep as directed by the Display Sequencer. When the proper triggering criteria to initiate a sweep are detected, a triggering gate signal is produced to start the selected sweep.

Control data from the processor defining trigger mode, coupling, and slope parameters for each trigger is clocked into two storage registers internal to U500 by the A TRIG CLK signal on pin 23 ($\overline{CCA}$) and the B TRIG CLK signal on pin 47 ($\overline{CCB}$). The Display Sequencer selects the A trigger source with the $\overline{SR0A}$, $\overline{SR1A}$, and $\overline{SR2A}$ signal lines; the B trigger source is selected using the $\overline{SR0B}$, $\overline{SR1B}$, and $\overline{SR2B}$ signal lines. Table 3-2 illustrates trigger source selection.

Table 3-2
Trigger Source Selection

Select Inputs			Trigger Source
SR2A(B)	SR1A(B)	SR0A(B)	
H	H	L	CH 1
H	L	H	CH 2
H	L	L	ADD
L	H	L	CH 3
L	L	H	CH 4
H	H	H	LINE (or BWLB)[a]

[a]During calibration routines from the Diagnostic Monitor.

To initiate the A Sweep, the trigger hybrid compares the selected signal to the analog trigger level input at pin 13, the TLA (trigger level A). B trigger signals are compared to the TLB (trigger level B) signal at pin 37 when trigger B Sweeps are required. When the proper trigger signal is detected, U500 outputs a trigger gate ($\overline{TGA}$ or $\overline{TGB}$) to the appropriate sweep circuit to initiate that sweep.

When an A Sweep is initiated, the trigger-status line ($\overline{TSA}$) (trigger status A, U500 pin 20) goes LO to signal the Display sequencer that a trigger has occurred. Until the sweep is completed, the $\overline{TGA}$ signal on pin 18 (or $\overline{TGB}$ signal on pin 42 for B Sweeps) remains LO. After the A Sweep is completed, the A Sweep Gate ($\overline{SGA}$) from A Sweep hybrid U700 (via U980A) will go HI, causing the Display Sequencer to set its THO (trigger holdoff) line (pin 13) HI. This resets the sweep hybrid and the trigger hybrid in preparation for the next trigger event.

The B Trigger Holdoff input (THOB, U500 pin 39) is held HI (keeping the B Trigger reset) until the A Sweep Delay Gate (DG, U700 pin 41) goes LO (see the following A Sweep description). When DG goes LO, the B Trigger portion of U500 is enabled. The B Sweep Trigger functions in a manner similar to that of the A Sweep Trigger just described. During a parametric measurement, the THOB line may be driven by either A Sweep Delay Gate or BHO from the measurement PAL, U975. If CNTL1 is LO, THOB is driven by A Sweep Delay Gate through the buffer transistor Q741. If CNTL1 is HI, Q741 is held off by Q742 and THOB is driven by BHO.

A Sweep

When properly triggered, the A Sweep circuit generates linear sweep ramps of selectable slopes. When amplified, these ramp signals horizontally sweep the crt beam across the face of the crt. The A Sweep circuitry consists of U700, Q709, Q710, Q741, U910B, U980A, and associated components.

The A Sweep ramp signal is derived by charging one of several selectable capacitors from a programmable constant-current source. Capacitor selection depends on the sweep-rate-dependent control data (CD) on pin 29 that is clocked into A Sweep hybrid U700 by the A SWP CLK on pin 28 ($\overline{CC}$). This sweep-rate data causes some internal logic to select either hybrid-mounted capacitors CT0 or CT1 or capacitor C708 at the CT2 (timing capacitor two) pin. An additional capacitor, C709, may be selected (via Q709 and Q710) if the control data asserts the TCS (timing capacitor select) signal on pin 9. TCS will be HI for A Sweep speeds slower than 1 ms per division. Capacitor C707 and associated circuitry form a linearity compensation circuit.

The constant current to charge the selected capacitor is derived from the DAC-controlled voltage, A TIM REF (A timing reference), generated on the Control Board. The ITREF input (U700 pin 24) is held at zero volts by an internal programmable current-mirror circuit at that input (see Figure 3-5). The A TIM REF voltage is applied to the current mirror via series resistors R723 and R724 to establish the input reference current (ITREF). The output of this current mirror is related to the input reference current by a multiple "M" that is set by a control data field

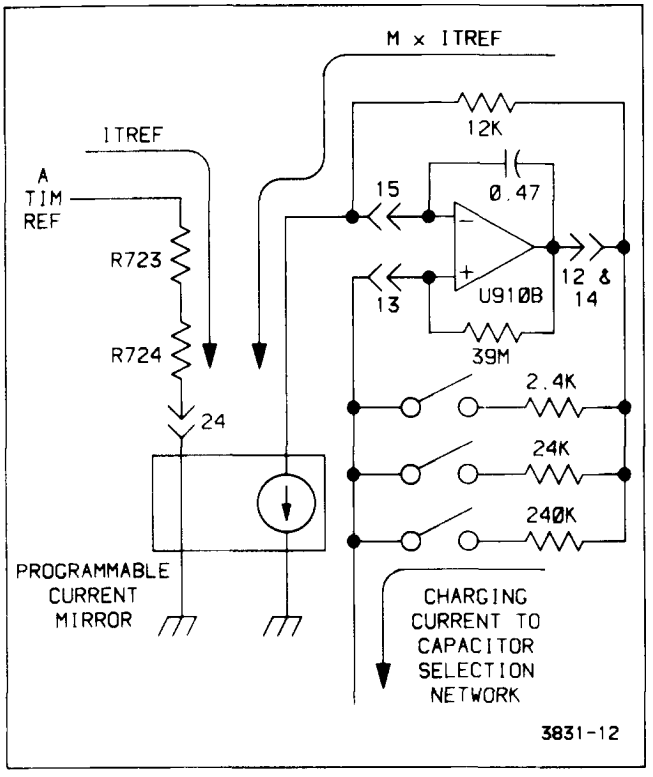

Figure 3-5. Sweep generator.

stored in the internal control register of U700. The derived output current (M x ITREF) is connected to another programmable current-mirror circuit, U910B, external to the hybrid. The output of U910B provides the actual charging current and is a control-data-selected multiple of the M x ITREF current.

At the time of calibration, the processor will vary the ITREF input current until the slope of the output ramp for specific current-mirror/timing capacitor combinations is precisely set. The values of A TIM REF at these settings allow the processor to precisely calculate the characteristics of the current-mirror circuits at their various multiplication factors and the charging characteristics of the timing capacitors. These values are stored as calibration constants in nonvolatile memory (RAM U2460, diagram 1).

Once the calibration constants are set, any setting of the SEC/DIV switch causes the Microprocessor to recall the associated calibration constants from RAM. The processor then calculates the proper value of A TIM REF based on the selected timing capacitor and the current-mirror multiplication factors.

If the SEC/DIV VAR control is out of the calibrated detent position, the processor will decrease the A TIM REF voltage from the maximum, in-detent value by an amount proportional to the position setting of the VAR control. At the maximum, fully counterclockwise setting of the VAR control, the ITREF current is one-third that of the normal, in-detent current.

For A Sweep hybrid U700 to initiate a sweep at the selected rate, the $\overline{\text{AUXTRIG}}$ (auxiliary trigger) input (pin 3), the THO (trigger holdoff) line from the Display Sequencer (on pin 1), and the $\overline{\text{TRIG}}$ (trigger) line from the trigger hybrid (on pin 2) must all be LO. With these three inputs LO, the A SWEEP ramp begins, and the sweep gate ($\overline{\text{SG}}$) output (pin 45) goes LO. The buffered sweep gate signal ($\overline{\text{SGA}}$) at the output of U975 returns to the Display Sequencer through R981 to indicate that the A Sweep is active. The sweep gate signal is used by various other circuits for their timing activities and is held LO until the A SWEEP ramp ends. The buffered (negative) sweep gate is inverted and routed to the rear-panel A GATE output connector via U975.

Diodes CR752 and CR753 and associated components form a charging network that permits delaying the timing of the end-of-A-Sweep gate signal ($\overline{\text{SGAZ}}$) for B Sweep displays. For normal A Sweep operation with the $\overline{\text{SGBZ}}$ signal HI, the SGAZ signal will end quickly, since the capacitance associated with Z-Axis hybrid U950 input (diagram 6) will be charged positively through both R753 and R754. For B Sweep operation ($\overline{\text{SGBZ}}$ is LO), the end of the SGAZ gate signal will be delayed slightly (with respect to the normal sweep gate) since charging of the Z-Axis input capacitance will be at a slower rate through R754 only. This allows more of the B Sweep to be displayed than would otherwise be possible.

The A Sweep Delay Gate (DG) signal acts as the trigger holdoff (THO) signal for the B Sweep and the B Trigger circuitry. It is generated by comparing the A SWEEP ramp voltage to the selected delay reference (DR) level from analog switch U850C. As the ramp voltage crosses the delay reference level, the delay gate (DG) output signal goes LO, removing the HI THO level to the B Sweep. This enables the B Sweep to run immediately in RUN AFT DLY B Trigger Mode or, when in TRIG AFT DLY B Trigger Mode, enables the B Sweep to run when a B triggering event occurs.

The BDCA (A Sweep bypass-delay comparator) input (U700 pin 39) is a data bit from Auxiliary Control Register U140 (diagram 4) that, when HI, sets the A Sweep DG

output LO at the beginning of the A Sweep. This enables the B Sweep to run immediately at the start of the A Sweep and is used for calibration purposes and for options.

The capacitive load (part of the etched-circuit board) at the RDA (retrace delay adjust) input (U700 pin 4) is used to delay the retrace of the sweep until the Z-Axis drive is fully turned off in response to the SGAZ gate going HI. This delay prevents any part of the retrace from being seen.

B Sweep

Operation of B Sweep hybrid U900 is similar to that just described for the A Sweep with the following exceptions: the THO input (and thus sweep enabling) is controlled by the A Sweep hybrid or the measurement PAL and not the Display Sequencer (see the preceding A Sweep description). The timing capacitor select output, TCS, is not used, and only three timing capacitors are selectable (two on the B Sweep hybrid at CT0 and CT1 and one externally at CT2).

Calibrator

The Calibrator circuit, composed of Q550, U165B, U550A, B, C, and D, and associated components, generates a square wave output of precise amplitude and frequency characteristics. The CALIBRATOR signal provided at the front-panel output connector is useful for adjusting probe compensation and verifying VOLTS/DIV, SEC/DIV, and Δt (delta time) calibration. Output frequency is controlled by the Display Sequencer and is set to display five cycles across the ten crt graticule divisions at sweep speed settings from 100 ns per division to 100 ms per division. This feature allows quick and easy verification of the sweep rates. The Calibrator circuitry is essentially a voltage regulator that is alternately switched on and off, producing the square-wave output signal.

When the timing signal (CT) from the Display Sequencer to the base of U550D is LO, U550C (configured as a diode) is forward biased, shunting bias current away from Q550, keeping it turned off. When transistor Q550 is off, the front-panel CAL OUT connector is pulled to ground potential through R558, setting the lower limit of the CALIBRATOR output signal.

As the CAL signal goes from LO to HI, the emitter of U550D is pulled HI to reverse bias U550C. Bias current for Q550 is established, and the transistor is turned on. The voltage at the emitter of Q550 rises to a level of +2.4 volts, determined by the voltage regulator composed of U165B, U550A, U550B, and associated components. This regulated level is applied to the front-panel CALIBRATOR connector through a voltage-divider network composed of R557 and R558. This produces an output voltage of 400 mV with an effective output impedance of 50 Ω.

Since the frequency of the CALIBRATOR signal is controlled by the same divider chain that controls operation of the vertical chopping rate, the intentional 200-ns shift added to the chop signal at the end of some sweeps (to desynchronize the chopping rate from the sweep rate) shows up on the CALIBRATOR signal as an irregular-width pulse. This shift is not apparent when viewing the CALIBRATOR signal on the instrument providing the signal (since the skew occurs during sweep-retrace time), but it should be taken into account when using the CALIBRATOR signal with other instrumentation. The skew can be eliminated from the signal by setting the instrument TRIGGER MODE to SGL SEQ (to shut off the sweeps).

PARAMETRIC MEASUREMENTS

The VOLTS Parametric Measurement is made using the same methods and circuitry that is used in the Auto Level trigger mode to find the peak voltages. The accuracy of the VOLTS measurement is based on the accuracy of the trigger level and the DC balance of the instrument.

All of the time-based Parametric Measurements use the A and B Sweep gates and delay gates as the basis for the measurements.The measurement PAL, U975, controls the signal flow while in the Parametric mode. The measurement flip-flop, U980B, reports the state of a variety of conditions to the SLIC through the $\overline{SGB}$ line. The SLIC data is read by the processor system and used to compute the desired measurement.

VERTICAL CHANNEL SWITCH AND OUTPUT AMPLIFIERS

The Vertical Channel Switch (diagram 6) selects the signal source for vertical deflection of the crt beam. The Vertical, Horizontal, and Z-Axis output amplifiers provide the signal amplification necessary to drive the crt.

Vertical Channel Switch

The Vertical Channel Switch consists of hybrid Channel Switch U400, that selects one of the vertical signals for application to the Vertical Output Amplifier, and a combined switch/amplifier circuit that converts the single-ended readout vertical signal into a differential signal for application to the Channel Switch.

Channel selection is controlled by the Display Sequencer $\overline{VS1}$ through $\overline{VS4}$ signals applied to the vertical channel selection pins (pin 24, pin 25, pin 13, and pin 14 respectively). (See Table 3-3 for the Vertical Display Selection.) When a vertical select line is LO, the associated input signal pins are connected to the differential output (+OUT, pin 11 and −OUT, pin 3). The CH 5 input signal

Table 3-3
Vertical Display Selection

Select Inputs				Vertical Display
VS1	VS2	VS3	VS4	
L	H	H	H	CH 1
H	L	H	H	CH 2
L	L	H	H	ADD
H	H	L	L	CH 3
H	H	H	L	CH 4
H	H	H	H	Readout (Y)

(Readout Vertical) is added to the output whenever both the $\overline{VS3}$ and $\overline{VS4}$ select signals are HI but will only contain readout information when the readout select logic (U975A and U975C) detects that the Display Sequencer has set both the Horizontal Select signals ($\overline{HSA}$ and $\overline{HSB}$) HI (readout selected).

READOUT SWITCH/AMPLIFIER. Transistors U485A, U485B, U485C, U485D, and U475C, along with their associated components, make up an analog switch circuit that routes either the readout vertical signal at the base of U485A or the ground reference at the base of U485C to the output at the emitter of U475C. The signal selected depends on the complementary voltages applied to the emitter junctions of the two emitter-coupled transistor pairs, U485A and B and U485C and D. The selection voltages are developed by voltage-divider networks on the complementary logic outputs of U975A and U975C.

When readout information is to be displayed, the horizontal select inputs to U980B and U980C go HI and the output of NAND-gate U975C goes LO. The LO applied to the divider network of R498, R484, and R471 pulls the anode of CR484 low enough to reverse bias it. This forward biases the emitter-coupled pair U485A and B via R483. NAND-gate U975A inverts the LO and applies a HI to the junction of R497 and R485. The HI forward biases CR485, and the emitters of U485C and D are pulled to a level in excess of +2 V, reverse biasing the transistor pair. With U485C and D reverse biased, the ground reference level at the base of U485C is isolated from the output, while the readout vertical information is allowed to pass through the forward-biased transistor pair.

When readout information is not being displayed, a HI is present at the output of NAND-gate U975C. The HI forward biases CR484 and, when inverted by U975A, reverse biases CR485. With the biasing conditions reversed, the transistor pair of U485C and D becomes forward biased and U485A and B becomes reversed biased. The ground reference level present at the base of U485C is coupled to the output, while the readout vertical signal is isolated.

The output signal (either the readout vertical signal or the ground reference level) is applied to the CH5+ input of Channel Switch U400 via R495 and R412. The inverting amplifier circuit composed of U475A, U475B, U475D, and associated components inverts the readout vertical signal for application to the CH5− input. The amplifier is an inverting unity-gain configuration with transistors U475A and U475B connected as an emitter-coupled pair. The base of U475A is referenced to ground through R482. The base of U475B is pulled to the same level by the negative feedback from emitter-follower U475D through R478. The noninverted signal is applied to the base of U475B through R492 and will attempt to increase or decrease the current to the base of U475B, depending on the amplitude and polarity of the signal. However, the negative feedback from the collector of U475B (via U475D and R478) will hold the base of U475B at the ground reference level. The feedback current through R478 develops a voltage drop across R478 that is equal in amplitude but opposite in polarity to the noninverted vertical readout signal. The inverted readout signal is applied to the Channel Switch on pin 2 (CH5−) via R476 and R402.

The HF ADJ (high-frequency adjust) potentiometer R417 and resistor R416 (connected to pin 16) adjust the high-frequency response of the Channel Switch hybrid.

Vertical Output Amplifier

Vertical Output Amplifier U600 is a hybrid device that provides the final amplification of the selected vertical signal, raising it to the level required to drive the crt deflection plates. Vertical deflection signals from the Vertical Channel Switch are delayed approximately 78 ns by Delay Line DL100. This delay allows the Sweep and Z-Axis circuits to turn on before the triggering event begins vertical deflection of the crt beam, thereby permitting the operator to view the triggering event. The bridged-T network, composed of inductors and capacitors built into the circuit board, corrects phase-distortion introduced by the delay line. The RLC networks connected between the output pins of U400 are adjusted during calibration to obtain the correct overall high-frequency response of the vertical deflection system. The vertical signal from the Delay Line is applied to pins 10 and 3 of U600. The RL network connected between pins 8 and 5 (COMPA and COMPB) of U600 compensates the signal for the skin-effect losses associated with the delay line.

Amplifier gain and vertical centering are adjusted by R638 and R639 respectively, primarily to match the amplifier hybrid to the crt installed in the instrument. On the 2465B, the Dynamic Centering circuit sinks an intensity-dependent correction current away from the vertical centering input at pin 39. The correction signal holds the vertical centering stable over a wide range of varying display intensities. Readout jitter adjustment pot R618 is used to minimize thermal distortion in the output amplifier to reduce jitter in the display readout.

The vertical output signal at pins 28 and 33 of U600 (OUT A and OUT B) is applied to the vertical deflection plates of the crt (diagram 8) via L628 and L633. The deflection plates form a distributed-deflection structure that is terminated by a hybrid resistor network. One element of the terminating network is an adjustment potentiometer used to match the network impedance to that of the crt.

BANDWIDTH LIMITING. Bandwidth limiting coils L644 and L619, along with capacitors built into U600, form a three-pole filter used to roll off high-frequency response of the Vertical Output amplifier above 20 MHz. To limit the vertical bandwidth, the $\overline{\text{BWL}}$ (bandwidth limit) input to U600 (pin 16) is pulled LO. It may be set LO either by the BWL control data bit from Auxiliary Control Register U140 (diagram 4) when the operator selects the Bandwidth Limit feature or automatically by the output of NAND-gate U975A in the Vertical Channel Switch circuitry (via CR616) when the readout is being displayed.

TRACE SEPARATION. The voltage applied to the TS (trace separation) input of U600 (pin 42) is used to offset the output levels to vertically shift the position of the trace on the crt. During normal sweep displays, TS1 + TS2 signal applied to the base of Q600 by the Display Sequencer (diagram 5) is HI, and the transistor is turned on. The TRACE SEP level at the junction of R642 and CR600 is shunted to ground, and no offsetting at the output signal will occur. For those displays in which trace separation should occur, the Display Sequencer switches the base of Q600 to ground level to turn off the transistor. The trace separation level set by front-panel TRACE SEP control R3190 (via MUX U2530 and sample-and-hold circuit U2630C and C2631) is applied to the TS input of U600, and a corresponding offset of the displayed trace will occur.

BEAM FIND. As an aid in locating off-screen or overscanned displays, the instrument is provided with a beam-finding feature. When the front-panel BEAM FIND button is pushed, the beam-find input pin (BF, pin 15) of U600 will be pulled HI. While BF is HI, the dynamic range of Vertical Output Amplifier U600 is reduced, and all deflected traces will be held to within the vertical limits of the crt graticule.

Also, the activation of the BEAM FIND switch is detected by the microprocessor during its normal Front-Panel Switch Scanning. When detected, the microprocessor initiates a CRT Wakeup sequence for 2467B instruments and generates a User Request SRQ if option 10 is installed.

OUTPUT PROTECTION CIRCUIT. A current-limit circuit composed of transistors Q623 and Q624 protects the Vertical Output Amplifier from a short-circuited output or a bias-loss condition. Either of these fault conditions will cause excessive current to flow into pins 30 and 31 of U600. Current in FET Q624 is limited to the IDSS current, so the voltage at pins 24, 30 and 31 will drop. This decreases the forward bias on pass-transistor Q623 and lowers the voltage at pin 23 of U600 enough to provide some degree of protection for the device.

Horizontal Amplifier

The Horizontal Amplifier circuitry consists of a Horizontal Output Amplifier U800, a unity-gain buffer amplifier made up of the five transistors in U735, and associated components.

UNITY-GAIN BUFFER AMPLIFIER. The amplifier circuit composed of U735A, B, C, D, and E along with their associated components, form a unity-gain amplifier that buffers the ramp signal from A Sweep Generator U700 to the Horizontal Output Amplifier. Transistors U735C and D form a differential pair with the negative excursion of their emitters limited to −5 V (clamped by U735E). Negative feedback from the collector of U735C to its base is via emitter-followers U735A and B (in parallel) which drive the A Sweep input (pin 18, A+) of Horizontal Output Amplifier U800.

HORIZONTAL OUTPUT AMPLIFIER. Integrated circuit U800 provides the final amplification of the selected horizontal-deflection signal required to drive the crt. One of the single-ended input signals applied to the four input pins is converted to a differential-output signal at the output pins of the amplifier. The four deflection signals to U800 are: the A sweep (pin 18, A+), the B Sweep (pin 16, B+), the Readout Horizontal signal (pin 17, RO) and the Channel 1 signal (used for horizontal deflection of the X-Y displays) at pin 20, the X+ input pin. Signal selection is done by an internal channel switch and is controlled by the $\overline{\text{HSA}}$ (horizontal select A) and $\overline{\text{HSB}}$ (horizontal select B) signals from the Display Sequencer (see Table 3-4).

Table 3-4
Horizontal Display Selection

Control Level		Selected Signal
HSA	HSB	
H	H	Readout (X)
H	L	B Sweep Ramp
L	H	A Sweep Ramp
L	L	X Input (from CH 1)

Switching between unmagnified (X1) gain and magnified (X10 gain) is also controlled by signals from the Display Sequencer. For normal horizontal deflection, the $\overline{MAG}$ signal on pin 14 of U800 is HI, and the gain of the output amplifier produces normal sweep deflection. Precise X1 deflection gain is set by adjusting X1 Gain pot R860. When the X10 MAG feature is selected, amplifier gain for the magnified sweeps is increased by a factor of 10. The $\overline{MAG}$ signal from the Display Sequencer goes LO when magnified sweep is to be displayed. This switches the amplifier gain and switches analog switch U860C from the X1 position to the X10 position. Amplifier gain in the magnified mode is adjusted by adding or subtracting a small bias current using X10 Gain control R850. Dc offsets in the amplifier and crt are compensated for, using Horiz Centering pot R801 to precisely center the display. On the 2465B, an intensity-dependent position correction signal, used to hold the horizontal centering stable over a wide range of varying display intensities, is also added at this point by the Dynamic Centering circuitry.

Timing and linearity of the sweep is affected by the amplifier transient response; and Trans Resp pot R802, connected to pin 2, is adjusted during calibration for optimum accuracy of the high-speed sweeps.

As with the Vertical Output Amplifier, the Beam Find feature reduces the dynamic range of the Horizontal Output Amplifier. While the front-panel BEAM FIND button is pressed in, a HI is placed on U800 pin 15 via pull-up resistor R615, and the horizontal deflection is reduced, moving horizontally off-screen displays to within the graticule viewing area.

Z-Axis Amplifier

Z-Axis Amplifier U950 turns the crt beam off and on at the desired intensity levels as the oscilloscope goes through its display sequence. The BRIGHT (brightness) signal applied to U950 pin 44 from the Display Sequencer U650 (diagram 5) is amplified to the level required to drive the crt control grid (via the DC Restorer circuitry) and sets the crt beam intensity. The BLANK input signal applied to U950 pin 5, also from the Display Sequencer, blanks the trace during sweep retrace, chop switching, and readout blanking by reducing the VZ OUT signal to a blanked level. Sweep gate z-axis signals ($\overline{SGAZ}$ and $\overline{SGBZ}$) from the A Sweep and B Sweep hybrids (U700 and U900) respectively, (diagram 5) are applied to the Z-Axis Amplifier on pins 4 and 3. These signals turn the beam current on and off for the related displays and, when used in conjunction with the BLANK signal on pin 5, enable the sweeps to be blanked while still allowing the Readout circuitry to blank and unblank the crt for the readout displays.

Control signals applied to U950 pin 48, pin 2, and pin 1 ($\overline{HSA}$, $\overline{HSB}$, and TXY respectively) switch some internal logic circuitry to enable or disable different input signals for the various types of displays. Table 3-5 illustrates the effects of the various input signals on the output signal for different combinations of $\overline{HSA}$, $\overline{HSB}$, and $\overline{TXY}$.

The Z-Axis hybrid has an internal limiter circuit that prevents the crt from being damaged during high-intensity, high-repetition-rate displays. A signal representative of the intensity setting and the sweep repetition rate is integrated on C957 and results in a control level at pin 7 of U950 used to limit intensity of the crt beam. Maximum Grid drive is controlled by R949 on U950 pin 9.

Focus tracking for intensity (VZ OUT) level changes is provided by the VQ OUT (quadrapole output voltage) signal at pin 22 of U950. The VQ OUT signal varies the focusing voltages (and thus the focusing strength) of two quadrapole lenses in the crt (diagram 8). The VQ OUT signal is related to the VQ OUT level exponentially and provides the greatest auto-focus control at high intensity levels. Gain of the VQ OUT signal is set by the High-Drive Focus adjustment, R1842. On the 2465B, the VQ OUT signal also drives the Dynamic Centering circuit and holds the display position stable during wide-range intensity level changes.

On the 2467B, the transient response of the Z-Axis Amplifier is adjusted by potentiometer R1834, connected to U950 at pin 13.

Dynamic Centering (2465B only)

The circuit composed of U3401, U3402, and associated components generates compensating signals to offset positioning effects that occur in the crt when the intensity is varied over a wide range. The VQ OUT signal from Z-Axis Amplifier U950 is exponentially proportional to the display intensity and dynamically controls the intensity-dependent offsets.

Table 3-5
Blanking and Intensity Control Selection

Control Inputs			Intensity Affected By	Blanking Affected By	Typical Display
TXY	HSA	HSB			
X[a]	H	H	BRIGHT (RO level)	BLANK	Readout
X	H	L	BRIGHT, Z EXT	BLANK, SGAZ, SGBZ	Delayed Sweep
X	L	H	BRIGHT, SGBZ,Z EXT	BLANK, SGAZ	Main Sweep
L	L	L	BRIGHT, SGBZ, Z EXT	BLANK	X-Y
H	L	L	BRIGHT, SGBZ, Z EXT	BLANK, SGAZ	X-Y

[a]X = State doesn't matter.

Dynamic Centering adjustment pots R3401 and R3407 set the gain and polarity of the signals at their related outputs by varying the current in the emitter circuit of one of two emitter-coupled pairs of transistors. Adjusting the bias level, at either pin 4, above $\simeq -10.6$ volts (determined by R3410 and R3411 at the complementary inputs, pins 1) will generate an inverted signal, while adjusting the bias levels below -10.6 volts will cause a noninverted signal. Amplitude of the resulting signal is dependent on how far from the -10.6-volt reference the bias is set. The output signal is added or subtracted from the position voltage applied to the Vertical and Horizontal Output Amplifiers. Both pots are adjusted so that position shifts due to display intensity variations are minimized.

READOUT

The Readout circuitry (diagram 7) is responsible for displaying the alphanumeric readout characters in the crt. An eight-bit character code specifying each character (or cursor segment) to be displayed is written from the Microprocessor to a corresponding location in the Character RAM U2920 (a 2K-x-8-bit, random access memory integrated circuit). Each of the following 128 locations in the RAM, address locations 0 through 63 for the first and fourth readout lines and 128 through 191 for the second and third readout lines, corresponds to one of the 128 possible character locations in the crt readout display (see Figure 3-6). The next 128 RAM locations, address locations 64 through 127 for the first and fourth readout lines and 192 through 255 for the second and third readout lines, are used to store cursor segment information for the display of the ΔV and Δt measurement cursors. The eight-bit character code written to each location in RAM points to a block of addresses in Character ROM U2930. This block in the ROM contains the dot-position information for the specific character to be displayed at the associated crt position.

Each character is made up of zero (for a space character) or more dots displayed in an eight-wide by sixteen-high dot matrix. Specific blocks of ROM addresses contain all the X-Y offset coordinates for the dots in a particular character in the readout. The coordinates are referenced to the lower-left corner of the character dot matrix. Each individual data byte in the block of ROM addresses contains both the X and the Y coordinates for one dot of the associated character.

To display a character, a combination of the character position on the crt (the RAM address) and the byte of X-Y position data from Character ROM U2930 (relative to that character position) is applied to Horizontal and Vertical DAC (digital-to-analog converters) circuits, U2910 and U2905 respectively. In these circuits, the X-Y position data is converted to analog deflection signals used to position each dot in the crt readout display. Each of the position bytes are read from the block of ROM defining the character under control of the readout timing and sequencing circuitry. The resulting dots, when displayed in sequence, form the character at the proper location on the crt.

Readout I/O

The Readout I/O circuitry, composed of U2860, U2865, U2960, and associated components, provides the interface between the Microprocessor and the Readout board. Two types of data, Readout mode data and character data, are written to the Readout board serially via data bus line BD0.

STORING A CHARACTER. Displaying a character starts with serially clocking 16 character data bits into a 16-bit shift register formed by registers U2960 and U2860. The $\overline{ROS1}$ strobe (readout strobe one) from the Address Decode circuitry (diagram 1) is the clocking signal. The first eight bits of the loaded data indicate the character to be displayed, while the last eight select the location on the crt that the character is to be displayed.

On positive-going transitions of the $\overline{ROS1}$ strobe, the data bit present on the BD0 data line is shifted into the first latch of character address register U2960. The following negative-going edges of the $\overline{ROS1}$ strobe are inverted by U2965A to produce a positive transition that shifts the data bit present at U2960 pin 9 (Q_{SH}) into U2860. After 15 $\overline{ROS1}$ strobes have occurred, seven bits of character data are latched into U2860, and the eighth character bit and seven of the character address bits are latched into character address register U2960 (though they have not been shifted into their correct positions for addressing the RAM).

At this point, the last character bit remains to be shifted into the registers, but the operating mode must be set up first to ensure correct operation upon shifting in the final bit. The eight bits of mode data are shifted into the mode

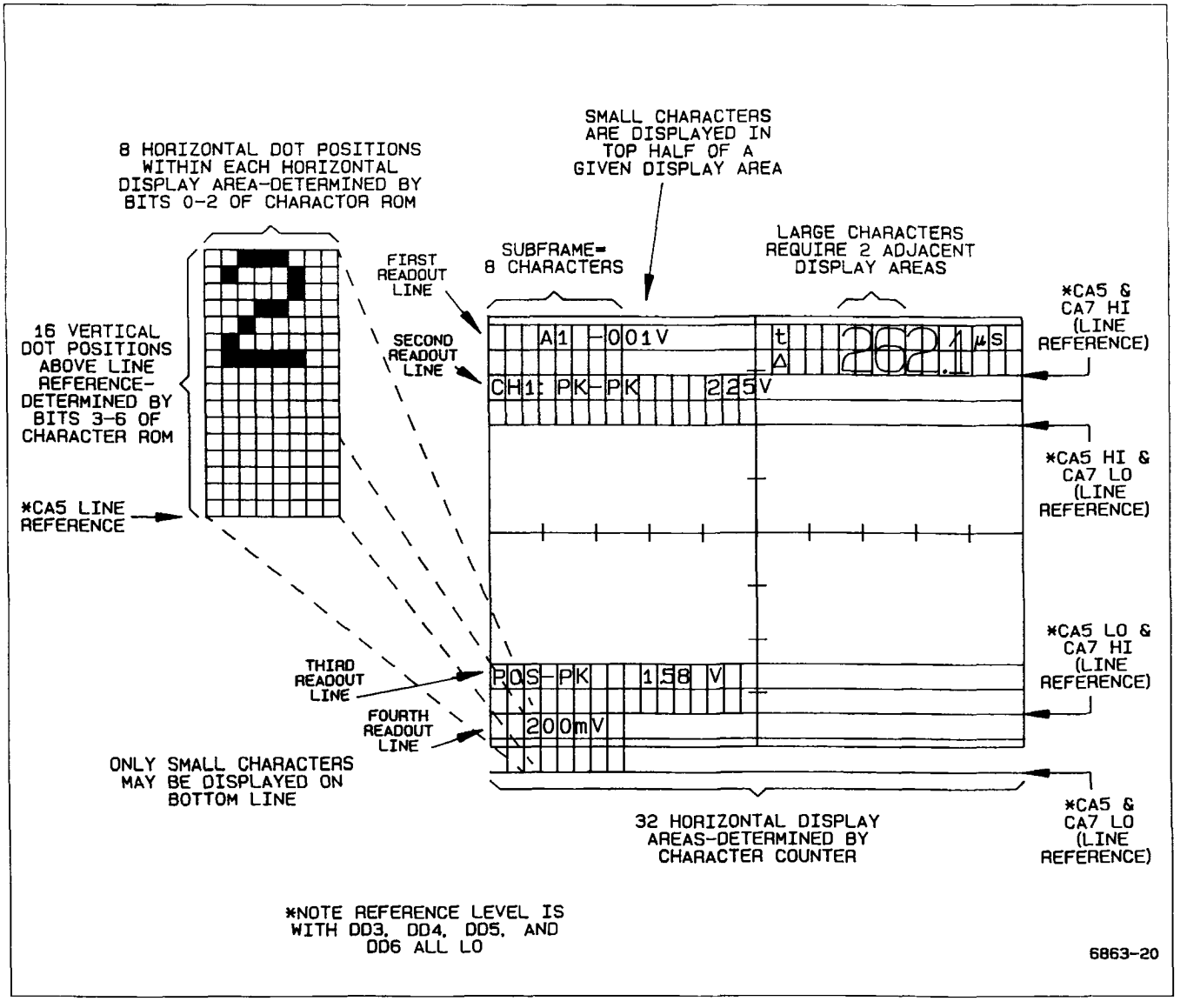

Figure 3-6. Developing the readout display.

control register U2865 by the $\overline{ROS2}$ strobe. Bit Q_4 ($\overline{WRITE}$), along with the $\overline{ROS2}$ and the R/ $\overline{W}$ DLYD signal are applied to the RAM enabling circuitry and determine when new character information will be written into the Character RAM. With U2865 loaded with the mode data, a final $\overline{ROS1}$ strobe clocks the eighth bit of character data from U2960 to U2860 on the negative edge, and the positive edge of the strobe clocks the eighth character address bit into U2960.

With control bit Q_4 from U2865 LO, the outputs of U2860 are enabled and the eight bits of character data (CD0 through CD7) are written in parallel into the Character RAM at the location selected by the eight-bit address from U2960. Register U2960 is enabled only when the Readout is not displaying characters (the REST signal at pin 15 of U2960 is HI).

The character data register U2860 also provides a means for the Microprocessor to read data from the Character RAM for partial verification of Readout circuit operation (during the power-up tests). The eight bits of parallel data from the Character RAM location selected by character address register U2960 are loaded into U2860 by setting bit Q_3 of mode control register U2865 LO. Inverter U2965C converts the LO to a HI and applies it to character-register U2860 at pin 1. The HI on pin 1, in combination with the fixed HI on pin 19 of U2860, switches the character register to the Parallel Load mode. The next positive transition of the $\overline{ROS1}$ strobe loads the eight data bits placed on the CD0 through CD7 bus lines into the register in parallel. Bit Q_3 is then returned HI, and the next positive transition of the $\overline{ROS1}$ strobe shifts the Q_A bit to pin 8 (Q_A'), the RO DO (readout data out) line. Seven more $\overline{ROS1}$ strobes shift the remaining seven bits of character data out onto the RO DO line to Status Buffer U2220 (diagram 2) to be read, one at a time, by the processor.

Character RAM

Character RAM U2920 provides temporary storage of the readout character selection data. This character data is organized as 256 eight-bit words that define the character that should be displayed at any given readout position on the crt. Cursor information is also stored in U2920 when cursors are to be displayed.

RAM locations may be addressed either from the Readout I/O stage by character address register U2960, as previously described, or by the Character Counter stage. Each of the following 128 address locations corresponds to a specific readout location on the crt. Address locations 0 through 63 correspond to the first and fourth readout lines and 128 through 191 to the second and third readout lines. The next 128 address locations store cursor information. Address locations 64 through 127 correspond to the first and fourth readout line storage and 192 through 255 to the second and third readout line storage. The eight bits of data written to one of these locations from the Readout I/O stage is a code that identifies the specific character (or cursor segment) that should be displayed at the associated crt location. After the display data is written into the RAM, the Character Counter is allowed to address the RAM, incrementing through the RAM address field. The eight-bit character codes for each display location are output to Character ROM U2930 in sequence.

Character Counter

The Character Counter stage consists of two four-bit counters (both within U2940) cascaded together to form an eight-bit counter and tristate buffer U2935 which drives the RAM address lines.

As the Character Counter addresses each RAM location (the counter also determines the character screen location), a sequence of "dot display cycles" is performed in which the individual dots that make up the character are positioned on the crt and turned on. The $\overline{EOCH}$ (end of character) signal applied to U2855A prevents the counter from incrementing until all dots of the character have been displayed. As the last dot of a character is addressed, the $\overline{EOCH}$ bit at pin 2 of U2855A goes LO. The next $\overline{GETDOT}$ pulse increments U2940 (via U2855A), and the next RAM location is addressed to start the display of the next character. Space characters have the $\overline{EOCH}$ bit set LO for the first "dot" of the character and merely advance the Counter to the next character address without displaying any dots. See the Character ROM description for further explanation of the $\overline{EOCH}$ bit.

Character ROM

Character ROM U2930 contains the horizontal and vertical dot-position information for all of the possible characters (or cursor segments) that may be displayed. The eight bits of character data from the Character RAM are applied to the eight most-significant address inputs (A4 through A11) of the Character ROM and select a block of dot-positioning data unique to the character to be displayed. The Dot Counter increments the four least-significant address lines (A0 through A3), causing the ROM to output a sequence of eight-bit words, each defining a dot position for the selected character.

The three least-significant bits of a ROM dot-data word (DD0 through DD2) select one of eight horizontal positions for the dot within an eight-by-sixteen character matrix (see Figure 3-6). The next four bits (DD3 through DD6) define the vertical position of the dot within the matrix. These dot-data bits are applied to the Horizontal and Vertical Character DACs, where they are converted to the analog voltages used to position the dot on the crt.

The last dot-data bit DD7 is the $\overline{EOCH}$ (end of character) bit and, when LO, indicates that the last dot of the character is addressed. It is used to reset the Dot Counter (via U2855B) and enables the Character Counter to be incremented (via U2855A) after the last dot of a character has been displayed.

Two servicing jumpers, J401 and J402, have been provided to disable the Character ROM and force the DD7 bit ($\overline{EOCH}$) LO. In certain instances, these two conditions may be useful when troubleshooting the Readout circuitry. To prevent damage to the ROM output circuitry, J402 should only be installed after J401 is installed (to disable the ROM).

Dot Counter

The Dot Counter consists of two four-bit counters (both within U2870), OR-gate U2835A, inverter U2980D, and inverting input AND-gate U2855B. It sequences through a block of addresses containing dot-position data for a selected character. The Dot Counter is incremented when a dot is finished (via Inverter U2980D) by the $\overline{GETDOT}$ signal from the Dot Cycle Generator.

The counter increments through the block of dot-position data until the last byte of the block is encountered (last dot). This last data byte has the $\overline{EOCH}$ (end of character) bit (DD7) set LO. The dot is positioned and displayed in the normal manner, but when the $\overline{GETDOT}$ signal occurs for the next dot display cycle, the $\overline{EOCH}$ bit is latched into U2905 and generates the $\overline{EOCH1}$ (end of character, delayed one dot) signal at U2905 pin 18. With $\overline{EOCH}$ and $\overline{EOCH1}$ both LO, the HI reset pulse produced at pin 4 of NOR-gate U2855B resets the counter and, except for space characters, the $\overline{EOCH}$ bit returns HI. As the reset is removed from the Dot Counter, it is reenabled for display of the next character. For space characters, the $\overline{EOCH}$ bit will be detected as a LO when the first dot is read from the Character ROM, and the Character Counter will advance to the next character on the next rising edge of $\overline{GETDOT}$

Counter U2870 and OR-gate U2835A enable characters of more than 16 dots to be displayed. Since most of the readout characters are small, using 16 dots or less, efficient data storage is achieved by storing the dot-position data as 16 consecutive bytes. For displaying these smaller characters, the least significant four bits from U2870 are sufficient to address the 16 possible dot-position bytes.

When larger characters (up to 32 dots) are to be displayed, an additional bit of counter data must be used to address the ROM. This fifth bit comes from U2870 pin 3 and is ORed by U2835A with bit CD0 from the Character RAM. The block address for these larger characters always has bit CD0 set LO, so the counter bit from U2870 pin 3 is in control of the ROM address line at pin 4 of U2930. When displaying these larger characters, the dot count goes beyond 16 dots before the $\overline{EOCH}$ bit is set LO. On the seventeenth character, the fifth counter bit (pin 3 of U2870) will go HI to address the next 16-byte block of character data in ROM U2930. The lower four bits of the DOT Counter then sequence through this additional block in the normal manner until the $\overline{EOCH}$ bit is encountered, resetting the counter.

Horizontal DAC

The Horizontal DAC generates the voltages used to horizontally position dots of the readout display on the crt. Five data bits (CA0 through CA4) from the Character Counter stage position a character to the correct column in the display (32 possible columns across the crt), while three data bits from Character ROM U2930 (DD0 through DD2) horizontally position the dots within the eight-by-sixteen character matrix (see Figure 3-6).

The eight bits of position data are written to the permanently enabled DAC each time a new dot is requested by the Dot Cycle Generator. The $\overline{GETDOT}$ signal applied to pin 11 (Chip Select) enables the DAC to be written into, and the falling edge of the 5-MHz clock applied to pin 12 (Write) writes the data at the eight DAC input pins into an internal latch. The voltage at the DAC output pin changes to reflect the data present in the latch.

Vertical Character DAC

The function of Vertical Character DAC U2905 is similar to that of the Horizontal DAC just described. It is responsible for vertically positioning each character dot on the crt. The Vertical DAC circuit is made up of seven, D-type flip-flops (contained within U2905) and an accompanying resistor weighting network. The outputs of the flip-flops source different amounts of current to a summing node through a resistor weighting network.

The seven data bits are latched into U2905 on the rising edge of the $\overline{GETDOT}$ signal. Two bits of character address data (CA5 and CA7) from the Character Counter switches the vertical display position between the four readout display lines. When the display is to be in the bottom line, bit CA5 is set LO. With CA5 LO, zener diode VR2925 is biased off and a small current is sourced to the summing node via R2925. Vertical position above this reference is determined by dot data bits DD3 through DD6. When the top line is to be displayed, the CA5 bit is set HI, biasing VR2925 on. A larger current is now sourced into the summing node via R2925 and enough voltage is developed across R2926 to move the display to

the top row of the crt. The CA7 bit is used to offset the top and bottom readout display lines to form the center two readout display lines. As before, the individual dots are then positioned above this reference level by dot data bits DD3 through DD6.

Mode Select Logic and Analog Channel Switch

The Mode Select Logic circuitry is composed of analog switches U2800 and U2805, buffers U2820A and B, gates U2810A, B, C, and D, U2900B and C, and part of U2905. It controls the readout display mode by selecting which deflection signals should drive the Horizontal and Vertical Deflection Amplifiers during a readout display. Five display modes are decoded by the Mode Select Logic: character display, vertical cursor 0, vertical cursor 1, horizontal cursor 0, and horizontal cursor 1.

For normal character displays, cursor select bit CA6 on U2800 pin 1 is LO. This LO signal passes through analog switch U2800 and is latched into U2905 when the $\overline{\text{GETDOT}}$ request from the Dot Cycle Generator goes HI. This latched LO selects the character display mode by forcing the outputs of U2900B and C and U2810A and B HI. The HI outputs of U2900B and C applied to the select input pins of analog switch U2805 cause the Horizontal DAC output signal applied to U2805 pin 11 to be routed to the Horizontal Amplifier (diagram 6) via buffer U2820B. The same HI logic levels cause NOR-gates U2810C and D to produce a LO at their outputs. This causes analog switch U2800 to route the Vertical DAC output signal applied to pin 12 to the Vertical Output Amplifier (also diagram 6) via buffer U2820A.

For cursor displays, cursor select bit CA6 goes HI. This HI is routed through analog switch U2800 and latched into U2905 when $\overline{\text{GETDOT}}$ next goes HI. This produces a HI at U2905 pin 16, enabling the Mode Select Logic to decode output bits DD3, DD4, and DD5 (from U2905) to determine which of the four possible cursor modes is selected (see Table 3-6). Once one of the cursor modes is entered, analog switch U2800 routes a fixed HI from pin 5, pin 2, or pin 4 to U2905 to keep the Mode Select Logic enabled. Character display mode is reentered only when return-to-character-mode data is decoded (DD4 and DD5 both LO). When that occurs, U2800 routes the CA6 bit to U2905 and, if the bit is LO, the cursor display mode is halted.

CURSOR DEVELOPMENT. Cursors are displayed in short sections, alternating between both vertical positions (for the delta voltage cursors) or both horizontal positions (for the delta time cursors). When displaying delta voltage cursors, the CURSOR 0 level is routed to the Vertical Amplifier by analog switch U2800. This level determines the vertical position of one of the voltage cursors. Horizontal-positioning voltages for one segment of the cursor are routed from Horizontal DAC through analog switch U2805 and buffer U2820B to horizontally position each of the dots making up the cursor segment. DLY REF 1 is then used to vertically position the second cursor, and the Horizontal DAC positions each of the dots for that cursor segment. The cycle is repeated until all segments of both cursors are displayed.

Table 3-6
Readout Display Mode Selection

Control Bits				Mode Selected	Horizontal Signal	Vertical Signal
CA6 (Cursor Select)	DD5	DD4	DD3			
L	X[a]	X	X	Character Display	Horiz DAC	Vert DAC
H	L	H	L	Vert Cursor 1	Horiz DAC	DLY REF 1
H	L	H	H	Horiz Cursor 1	DLY REF 1	Horiz DAC
H	H	L	L	Vert Cursor 0	Horiz DAC	CURSOR 0
H	H	L	H	Horiz Cursor 0	CURSOR 0	Horiz DAC
H	L	L	X	Return to character display Mode		

[a]X = State doesn't matter.

Delta time cursor displays are similar in that the CURSOR 0 and DLY REF 1 signals are used to position the cursors. In this case, however, analog switch U2805 selects the CURSOR 0 and DLY REF 1 signals alternately to position the cursors horizontally, and the Horizontal DAC output is routed via analog switch U2800 and buffer U2820A to vertically position the dots within each cursor segment.

Refresh Prioritizer

The Refresh Prioritizer circuitry consists of U2850A and B, U2950A, U2990A, and U2985. It keeps track of how well the Readout circuitry is doing in displaying all the required readout information and maintains the overall refresh rate. Since the readout display must remain flicker-free and at a constant intensity over the entire sweep rate range, various modes of displaying readout information are provided. The Refresh Prioritizer keeps track of the display status and enables the various readout-display modes as required to produce minimal interference with the displayed waveform trace(s).

Ideally, readout information should be displayed only when the oscilloscope is not trying to display waveform traces. These times occur before a trace commences, after a trace is completed, or between consecutive traces. Displaying in this mode corresponds to "priority one" in Figure 3-7 and causes no interference with the displayed waveforms. If the Readout circuitry is able to display all the required readout dots during the holdoff time between sweeps, the prioritizer U2985 will turn off the Dot Start Governor until the next subframe of readout information is to be displayed. When the sweep times are either too fast to finish a readout display during holdoff (at 5 ns per division no identifiable holdoff time exists) or too slow to allow flicker-free readout, readout display modes other than priority one are initiated.

The next most desirable time for dots to be displayed is during "triggerable" time: that time between sweeps when the oscilloscope is waiting for a sweep trigger event to occur. This is designated priority two and may cause slight interference on the leading edge of the displayed trace if a dot is being displayed when the actual trigger occurs.

Finally, the least desirable dot display time is during a waveform trace display. This display time is designated either priority three or priority four. (Priority four indicates a higher demand of display time.) In priorities three and four, dot displays occur during the main portion of the waveform display. However, the waveform blanking associated with these displays is relatively random in nature and is usually not noticeable.

To start a readout display, the ROSFRAME (readout subframe) request from the Timing Logic (diagram 1) clocks the Q output of flip-flop U2850A HI. ROSFRAME is a periodic clocking signal used to hold the overall refresh rate constant and occurs at regular intervals, regardless of the state of the display.

As the Dot Cycle Generator runs, it resets half of U2830 in the Dot Timer at somewhat irregular intervals with the STARTDOT signal (via inverter U2890A). The Dot Timer then starts a timing sequence, and the rising edge of the REFRESH signal from U2830 pin 4 clocks the latched ROSFRAME request from U2850A pin 5 to the Q output (pin 9) of flip-flop U2850B. This HI, applied to the S1 input (pin 10) of prioritizer U2985, sets it up to increment with the next REFRESH clock applied to its clock input (pin 11). The LO $\overline{Q}$ output of U2850B (pin 8) applied to the reset input of U2850A resets the latched ROSFRAME request. See Figure 3-8 for an illustration of the timing sequence involved.

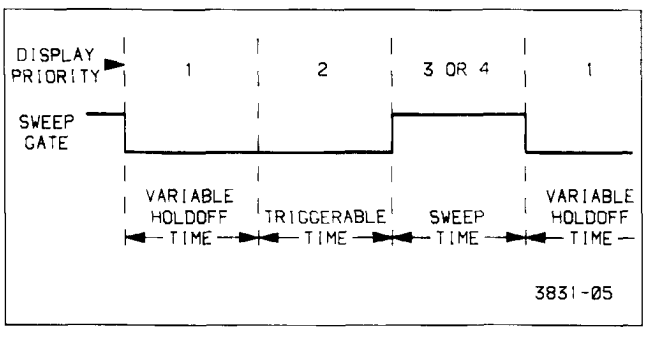

Figure 3-7. Readout display priorities.

Table 3-7
Operation of Prioritizer Shift Register

Select Inputs		Mode
S0	S1	
H	H	Parallel Load
H	L	L → Q_A (decrease priority)
L	H	H → Q_D (increase priority)
L	L	Hold Data

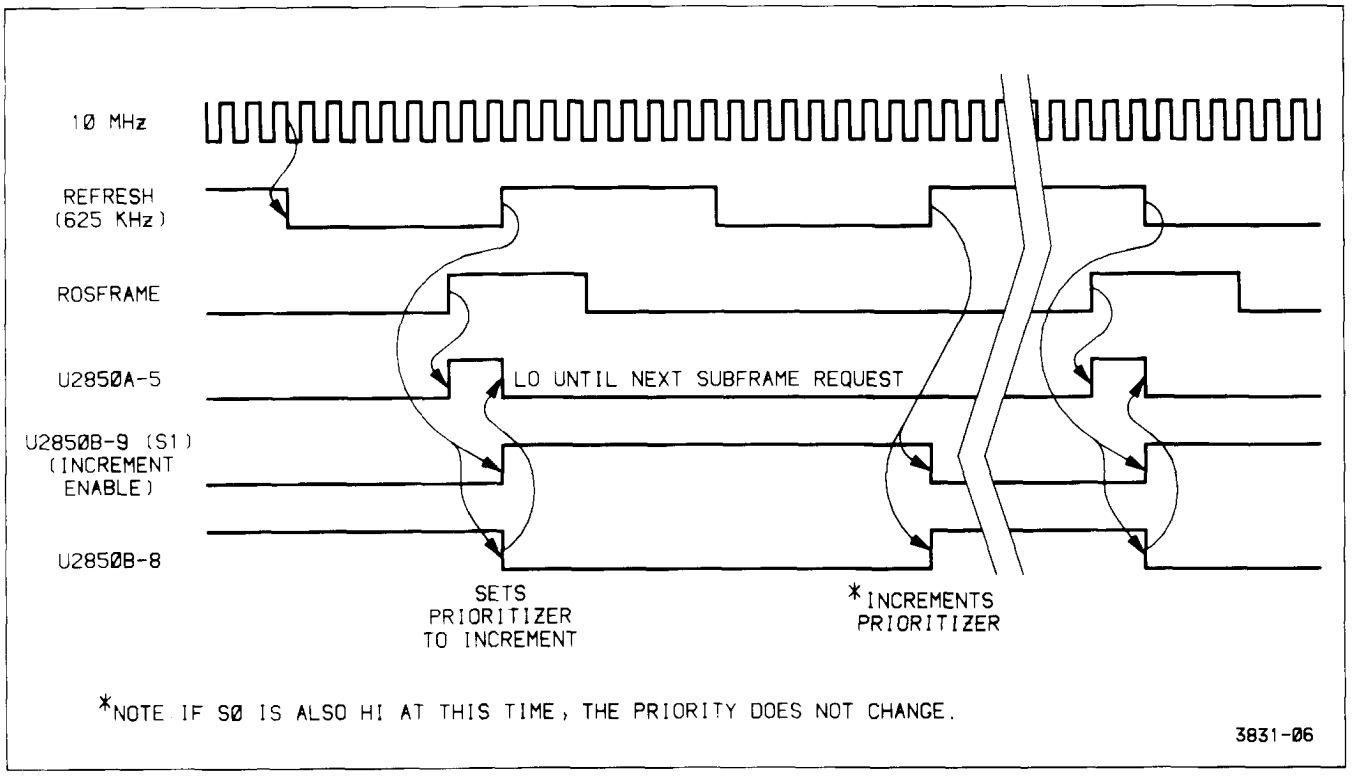

Figure 3-8. Timing of Refresh Prioritizer.

The next REFRESH clock increments the display priority to one by clocking a HI to the Q_D output (pin 12) of prioritizer shift register U2985. (Table 3-7 illustrates the operation of U2985.) The same clock latches the now LO ROSFRAME request at U2850B pin 12 to the Q output (pin 9), where it is applied to the S1 input (pin 10) of prioritizer U2985. The LO on the S1 input of the prioritizer will remain until another ROSFRAME request from the Timing Logic occurs, and the encoded priority at the output pins of U2985 will remain as it is presently set.

As each of the consecutive dots of the readout frame are displayed, the Dot and Character Counters increment until all dots of the subframe have been displayed (eight characters). As the Character Counter increments to address the next character of the display (first character of the next frame), the fourth bit of counter U2940 goes HI and sets the S0 input (pin 9) of prioritizer U2985 HI via exclusive-OR-gate U2990A. The Dot Timer then clocks the prioritizer with a REFRESH clock on pin 11 of U2985, and the priority is decremented back to zero (indicating that the subframe is completed). The next ROSFRAME request starts the process over again to display the next subframe of readout display. The sequence just described is the priority one display mode and is used when holdoff time between sweeps allows all dots of the subframe to be displayed before the next ROSFRAME request occurs.

If a second ROSFRAME request occurs before the Character Counter indicates the end of the subframe (to decrement the prioritizer back to zero), input S1 of U2985 will be set HI (while the S0 input pin remains LO) and the Prioritizer will increment to priority two (outputs Q_C and Q_D go HI) on the next STARTDOT cycle. If this display priority still is inadequate to complete the subframe display before the next ROSFRAME request occurs, priority two will be incremented up to priority three, or even to priority four should the condition persist. Priority four is operationally the same as priority three, but it is used to keep the readout circuitry continuously displaying readout data on through the next subframe, thus allowing the display to catch up. If priority four is in effect, the next decrement that occurs at the end of a subframe only returns the prioritizer to priority three, not to priority two.

The circuit composed of flip-flop U2950A and exclusive-OR-gate U2990A enables either edge of the CA3 bit to decrement the priority of the display when a subframe is completed. Either a negative or positive transition on pin 2 of U2990A will cause the output at pin 3 go HI since the Q output of U2950A is still at the opposite level. The HI from U2990A indicates that the end of the present subframe has occurred, and it sets up the prioritizer to decrement with the next REFRESH clock. At the same time that the prioritizer decrements, the changed level of the CA3 bit is clocked through U2950A and causes the output of exclusive-OR-gate U2990A to return LO until the next subframe is completed.

If the subframe is completed (S0 on U2985 goes HI) when a ROSFRAME request is also pending (S1 is also HI), U2985 does a parallel load, reloading the present priority back into the prioritizer. Since, in this case, the subframe display was completed at the same rate as the ROSFRAME request occurred, the readout display priority is not changed.

Dot Start Governor

The Dot Start Governor detects the display priority from the Refresh Prioritizer and initiates dot-display cycles as the appropriate conditions are met. The conditions tested include display priority, sweep gate completion, dot completion, readout control status, and the readout active enable from the Display Sequencer.

When the readout board status line (ACTIVE/ $\overline{\text{ADDRESSABLE}}$) is HI (signifying display) and the REST line goes HI to indicate that the dot cycle is complete, AND-gate U2970C generates a HI at pin 8 (DOTOK) to signal that a new dot display is allowed. The HI from U2970C enables most of the gating in the Dot Start Governor. If the Refresh Prioritizer has encoded a display priority of either one or two, the output of exclusive-OR-gate U2990B is HI. When DOTOK from U2970C goes HI to enable a dot display, the LO reset from pin 6 of U2970B to pin 1 of flip-flop U2880A is removed. Now, when the A Sweep gate ($\overline{\text{SGA}}$) goes HI (beginning of Holdoff), the HI at the D input of U2880A is clocked to the Q output and the $\overline{\text{Q}}$ output at pin 6 will go LO, requesting display of a priority one or two dot. This LO dot request is propagated through U2885B, U2890D, U2890B, and U2890C and sets the STARTDOT signal LO. STARTDOT going LO resets Dot Cycle Generator shift register U2995 and counter U2830B of the Dot Timer. Resetting the Dot Cycle Generator shift register causes the REST signal from U2995 pin 13 to go to a LO, removing the HI DOTOK signal at U2970C pin 8. As DOTOK goes LO, STARTDOT at pin 8 of U2890C goes HI to start the DOT Cycle Generator. At the same time the reset to U2880A is asserted via U2970B and the dot request is removed. Both the Dot Timer and the Dot Cycle Generator are now enabled and start the first dot-display cycle during holdoff time.

After the Display Sequencer U650 (diagram 5) has time to respond to the end of the sweep gate, it sets the readout active signal ($\overline{\text{ROA}}$) to pin 4 of U2880A LO. This sets pin 6 of U2880A LO, and the signal is propagated through U2885B, U2890D, U2890B, and U2890C, as before, resetting the Dot Timer and the Dot Cycle Generator. REST then goes LO as before and starts the Dot Cycle Generator and Dot Timer. This cycle continues, displaying one dot per cycle (except for the first non-displayed dot of a character which is automatically initiated by $\overline{\text{EOCH2}}$, until the Display Sequencer determines that the readout time is over (sets $\overline{\text{ROA}}$ HI) or until the display priority is decremented to zero.

When a display priority of three or four exists, the output of U2990B will be LO, and U2970B, U2880A, and the associated logic gates following it will not be able to initiate a dot cycle. In either of these display priorities, U2970D, U2835C, U2980A, U2965B, and flip-flop U2950B detect the higher priority and generate a readout request signal ($\overline{\text{ROR}}$) to the Display Sequencer. The LO from U2950B pin 8 propagates through U2890B and U2890C to initiate a STARTDOT cycle. When the Display Sequencer recognizes that the readout request signal is LO, it will perform the mode-dependent setup functions necessary to give display control to the Readout Board and will then set the $\overline{\text{ROA}}$ (readout active) line LO. The LO will be clocked into U2880B, and the Dot Cycle Generator will generate a $\overline{\text{GETDOT}}$ signal, resetting the readout request from flip-flop U2950B. Only one dot is displayed for each readout request.

A similar readout display request will be generated when priority-two-or-higher displays are required when sweep gates are not present (dot display during triggerable time after holdoff). This condition is detected by NAND-gate U2885A. AND-gate U2970D allows a readout request to be generated when in the interfere mode. This mode is always invoked in 2467B instruments and invoked only during a single-sequence waveform display in 2465B instruments and ensures that all of the selected sweep combinations are displayed once, followed by a complete readout frame (for the purpose of crt photography).

Dot Cycle Generator

The Dot Cycle Generator, composed of shift register U2995, flip-flop U2880B, and associated gating circuitry, generates time-related signals for the following purposes: unblanking the crt to display a dot; requesting the next byte of dot data in preparation for displaying the next dot; and reenabling itself to repeat the tasks, via the Dot Start Governor (dependent on the display priority).

The timing relationships of the Dot Cycle Generator output signals are controlled by shift register U2995. When the Dot Start Governor initiates a STARTDOT cycle as previously described, the STARTDOT signal initially goes LO, resetting all the Q outputs of U2995 LO and setting the Q output of flip-flop U2880B to a HI. The STARTDOT signal is then returned HI, and the Dot Timer counter U2830A and shift register U2995 are enabled. The shift register begins to consecutively shift HI logic levels to its Q output pins with each 5-MHz clock from the Dot Timer. After approximately 400 ns, pin 5 (Q_C) of the shift register will go HI. The HI at Q_C propagates through exclusive-OR-gate U2990D and AND-gate U2970A to unblank the crt by setting the readout blanking signal ($\overline{\text{ROB}}$) HI.

When the Q_F output of U2995 goes HI (1 μs after STARTDOT), the output of U2990D goes LO and the output of U2990C goes HI. The LO from U2990D propagates through U2970A to blank the crt ($\overline{ROB}$ goes LO) and to clock flip-flop U2880B via NAND-gate U2980C. The $\overline{ROA}$ (readout active) level from the Display Sequencer (diagram 5) is clocked from the D input (pin 12) of U2880B to the Q output; and, if LO (indicating that the readout circuitry had control of the crt when unblanking occurred; thus the dot was displayed), the output of U2980B is set HI. With three HI levels applied to NAND-gate U2885C, a $\overline{GETDOT}$ request is generated to get the next byte of dot-position data for display. The next 5-MHz clock sets the Q_G output of U2995 HI, and the output of U2990C goes LO, removing the LO $\overline{GETDOT}$ signal.

At 1.4 μs after STARTDOT goes HI, U2995 pin 13 (Q_H) goes HI to produce the REST signal, indicating that the current dot cycle is complete and the Dot Cycle Generator is at REST. If the readout ACTIVE/ $\overline{ADDRESSABLE}$ mode bit at U2970C pin 10 is still HI, the REST signal going HI produces a HI DOTOK signal (next dot is allowed) at pin 8. This HI applied to pin 10 of U2890C, along with any of the possible dot requests from the Dot Start Governor, will initiate another STARTDOT cycle for the next dot of the display. As long as the Display Sequencer holds the readout active line ($\overline{ROA}$) LO, U2885B, U2890D, and U2890B of the Dot Start Governor will automatically initiate dot cycles as soon as the previous one ends (REST goes HI), until the Refresh Prioritizer is decremented to zero.

When the last dot of the character is called from the Character ROM, the $\overline{EOCH}$ bit (DD7) applied to latch U2905 at pin 18 (in the Vertical Character DAC circuitry) is LO. At the end of that dot display cycle, the $\overline{GETDOT}$ signal (going HI) clocks the LO $\overline{EOCH}$ bit into latch U2905 and increments character counter U2940. The latched bit becomes the $\overline{EOCH1}$ signal (end of character, delayed one dot request) and is applied to U2855B, along with the already LO $\overline{EOCH}$ bit, to reset Dot Counter U2870. The least-significant bits to the Character ROM address pins (A0 through A4) are then zeros, and the first dot of the next character is addressed. The Horizontal and Vertical DACs don't write this first dot position data into their registers until the end of the next $\overline{GETDOT}$ signal. That same $\overline{GETDOT}$ signal also clocks $\overline{EOCH1}$ into U2905 which becomes $\overline{EOCH2}$ at pin 17 (end of character, delayed by two dot requests). $\overline{EOCH2}$ is applied to AND-gate U2970A and disables the gate prior to the time the Dot Cycle Generator attempts to unblank the crt for the first dot display; thus the first dot of a character is never displayed.

Disabling the unblanking path for the first dot of each character in the manner just described allows the more radical voltage changes between characters to settle before the actual display of the next character begins. When the dot data for one of these undisplayed dots also has the $\overline{EOCH}$ bit set LO, it is a space character, and the display is advanced to the next character.

Dot Timer

The Dot Timer, composed of U2890A and U2830, generates three, time-related signals used to synchronize the display and maintain the proper sequencing of the individual character dots.

The two least-significant bits of the Dot Timer, from U2830 pins 11 and 10, are reset at the beginning of a dot cycle by a LO STARTDOT signal applied to the reset input of the counter via U2890A. As the dot-display cycle begins, the STARTDOT signal returns HI and the Dot Timer begins counting in a binary fashion. The 10-MHz clock applied to pin 13 is divided by two to produce the 5-MHz clocking signal at output pin 11. The 5-MHz clock sequences the Dot Cycle Generator through the various phases of the dot-display cycle. The REFRESH output signal from U2830 pin 4 updates the Refresh Prioritizer as each subframe is displayed.

A third clock, from U2830 pin 6, occurs at approximately 8-μs intervals and allows any pending dot requests to generate a $\overline{ROR}$ signal to the Display Sequencer via flip-flop U2950B. (Readout request generation is described in the Dot Start Governor discussion.)

HIGH VOLTAGE POWER SUPPLY AND CRT FOR 2465B ONLY

The High-Voltage Supply and CRT circuit (diagram 8) provides the voltage levels and control circuitry for operation of the cathode-ray tube (crt). The circuitry consists of the High Voltage Oscillator, the High Voltage Regulator, the Cathode Supply, the Anode Multiplier, the DC Restorer, Focus Amplifiers, the CRT and the various CRT Control circuits.

High-Voltage Oscillator

The High-Voltage Oscillator transforms power obtained from the −15 volt unregulated supply to the various ac levels necessary for the operation of the crt circuitry. The circuit consists of transformer T1970, switching transistor Q1981, and associated circuitry. The low-voltage oscillations set up in the primary winding of T1970 are raised by transformer action to high-voltage levels in the secondary windings. These ac secondary voltages are applied to the DC Restorer, the Cathode Supply, and the anode multiplier circuits.

Oscillation occurs due to the positive feedback from the primary winding (pin 4 to pin 5) to the smaller base-drive winding (pin 3 to pin 6) for transistor Q1981. The frequency of oscillation is about 50 kHz, and is determined primarily by the resonant frequency of the transformer.

When power is first applied, the High-Voltage Regulator circuit detects that the negative crt cathode voltage is too positive and pulls pin 2 of transformer T1970 negative. The negative level forward biases transistor Q1981 via the base-drive winding of the transformer. Current begins to flow in the primary winding through transistor Q1981, inducing a magnetic field around the transformer primary winding. The increasing magnetic field induces a current in the base-drive winding that further increases the base drive to the transistor. This in-phase feedback causes current in Q1981 to increase until the primary winding current reaches its maximum value. As the rate of change of the primary current peaks and then reverses, the induced magnetic field begins to decay. This decreases the base-drive current and begins turning Q1981 off.

As Q1981 is beginning to turn off, the magnetic field around the primary winding continues to collapse at the resonant frequency rate of the transformer. This induces into the base-drive winding a voltage that completely turns off the transistor. The collapsing magnetic field goes to zero, then builds in the opposite direction to a maximum before collapsing again (resonant flywheel effect). This sequence of events occurs repetitively as the circuit continues to oscillate.

The oscillating magnetic field in the primary winding couples power into the secondary windings of the transformer. The amplitude of the voltages induced in the secondary windings is a function of the turns ratios of the transformer windings.

High-Voltage Regulator

The High-Voltage Regulator consists of U1956A and B and associated components. It monitors the crt Cathode Supply voltage and varies the bias point of the switching transistor in the High Voltage Oscillator to hold the Cathode Supply voltage at the nominal level. Since the output voltages at the other secondary winding taps are related by turns ratios to the Cathode Supply voltage, all voltages are held in regulation.

When the Cathode Supply voltage is at the proper level (−1900 V), the current through R1945 and the 19-MΩ resistor internal to High Voltage Module U1830 holds the voltage developed across C1932 at zero volts. This is the balanced condition and sets base drive in Q1981 via integrator U1956A and voltage-follower U1956B. Varying base drive to Q1981 holds the secondary voltages in regulation.

If the Cathode Supply voltage level tends too positive, a slightly positive voltage will develop across C1932. This voltage causes the outputs of integrator U1956A and voltage-follower U1956B to move negative. The negative shift charges capacitor C1951 to a different level, around which the induced feedback voltage at the base-drive winding will swing. The added negative bias causes Q1981 to turn on earlier in the oscillation cycle, and a stronger current pulse is induced in the secondary windings. The increased power in the secondary windings increases the secondary voltages until the Cathode Supply voltage returns to the balanced condition (zero volts across C1932). Opposite action occurs should the Cathode Supply voltage tend too negative.

Cathode Supply

The Cathode Supply circuit is composed of a voltage-doubler and an RC filter network contained within High-Voltage Module U1830. This supply produces the −1900 V accelerating potential applied to the CRT cathode and the −900 V slot lens voltage. The −1900 V supply is monitored by the High Voltage Regulator to maintain the regulation of all voltages from the High Voltage Oscillator.

The alternating voltage (950 V peak) from pin 10 of transformer T1970 is applied to a conventional voltage-doubler circuit at pin 7 of the High Voltage Module. On the positive half cycle, the input capacitor of the voltage doubler (0.006 μf) is charged to −950 V through the forward-biased diode connected to ground at pin 9 of the module (charging path is through the diode, so stored charge is negative). The following negative half cycle adds its ac component (−950 V peak) to this stored dc value and produces a total peak voltage of −1900 V across the capacitor. This charges the 0.006-μf storage capacitor (connected across the two doubler diodes) through the second diode (now the forward-biased diode) to −1900 V. Two RC filters follow the voltage doubler to smooth out the ac ripple. A resistive voltage divider across the output of the filter network provides the −900-V slot lens potential.

Anode Multiplier

The Anode Multiplier circuit (also contained in High Voltage Module U1830) uses voltage multiplication to produce the +14 kV CRT anode potential. Circuit operation is similar to that of the voltage-doubler circuit of the Cathode Supply.

The first negative half-cycle charges the 0.001-μf input capacitor (connected to pin 8 of the High Voltage Module) to a positive peak value of +2.33 kV. The following positive half cycle adds its positive peak amplitude to the voltage stored on the input capacitor and boosts the charge on the second capacitor of the multiplier (and those following) to +4.66 kV. Following cycles continue to boost up

succeeding capacitors to values 2.33 kV higher than the preceding capacitor until all six capacitors are fully charged. This places the output of the last capacitor in the multiplier at +14 kV above ground potential. Once the multiplier reaches operating potential, succeeding cycles replenish current drawn from the Anode Multiplier by the crt beam. The 1-MΩ resistor in series with the output protects the multiplier by limiting the anode current to a safe value.

Focus Amplifier

The Focus Amplifier, in conjunction with the auto-focus circuitry of Z-Axis hybrid U950 (diagram 6), provides optimum focus of the crt beam for all settings of the front-panel INTENSITY control. The Focus Amplifier itself consists of two shunt-feedback amplifiers composed of Q1851, Q1852, and associated components. The outputs of the amplifiers set the operating points of a horizontally converging quadrapole lens and a vertically converging quadrapole lens within the crt. The convergence strength of each lens is dependent on the electric field set up between the lens elements.

Since the bases of Q1851 and Q1852 are held at constant voltages (set by their emitter potentials), changing the position of the wiper arms of the ASTIG and FOCUS pots changes the amount of current sourced to the base junctions through R1856 and R1857 respectively. This changes the base-drive currents and produces different output levels from the Focus Amplifiers; that, in turn, changes the convergence characteristics of the quadrapole lenses.

Initially, at the time of adjustment, the FOCUS and ASTIG potentiometers are set for optimum focus of the crt beam at low intensity. After that initial adjustment, the ASTIG pot normally remains as set, and the FOCUS control is positioned by the user as required when viewing the displays. When using the FOCUS control, transistor Q1852 is controlled as described above; however, an additional current is also supplied to the base node of Q1851 from the FOCUS pot through R1855. This additional current varies the base-drive current to Q1851 and provides tracking between the two lenses as the FOCUS control is adjusted during use of the instrument.

The convergence strengths of the quadrapole lenses also dynamically track changes in the display intensity. The VQ OUT signal, applied to the crt at pins 5 and 6, is exponentially related to the VZ OUT (intensity) signal driving the crt control grid and increases the strength of the lenses more at higher crt beam currents. (A higher beam current requires a stronger lens to cause an equal convergence of the beam.)

DC Restorer

The DC Restorer provides crt control-grid bias and couples both the dc and the low-frequency components of the Z-Axis drive signal to the crt control grid. This circuit allows the Z-Axis Amplifier to control the display intensity by coupling the low-voltage Z-Axis drive signal (VZ OUT) to the elevated crt control-grid potential (about −1.9 kV).

The DC Restorer circuit (Figure 3-9) operates by impressing the crt grid bias setting and the Z-Axis drive signal on an ac voltage waveform. The shaped ac waveform is then coupled to the crt control grid through a coupling capacitor that restores the dc components of the signal.

GRID BIAS LEVEL. An ac drive voltage of approximately 300 V peak-to-peak is applied to the DC Restorer circuit from pin 7 of transformer T1970. The negative half cycle of the sinusoidal waveform is clipped by CR1953, and the positive half cycle (150 V peak) is applied to the junction of CR1930, CR1950, and R1941 via R1950 and R1953. Transistor Q1980, operational amplifier U1890A, and associated components form a voltage clamp circuit that limits the positive swing of the ac waveform at the junction.

Transistor Q1980 is configured as a shunt-feedback amplifier, with C1991 and R1994 as the feedback elements. The feedback current through R1994 develops a voltage across the resistor that is positive with respect to the +42.6 V on the base of the transistor. The value of this additive voltage plus the diode drop across CR1950 sets the upper clamping threshold. Grid Bias potentiometer R1878 sinks varying amounts of current away from the base node of the transistor and thus sets the feedback current through R1994. The adjustment range of the pot can set the nominal clamping level between +71 V and +133 V.

When the amplitude of the ac waveform is below the clamping threshold, series diode CR1950 will be reverse biased and the ac waveform is not clamped. During the time the diode is reverse biased, transistor Q1980 is kept biased in the active region by the charge retained on C1971 from the previous cycle. As the amplitude of the ac waveform at the junction of CR1930 and CR1950 exceeds the voltage at the collector of Q1980, diode CR1950 becomes forward biased, and the ac waveform is clamped at that level. Any current greater than that required to maintain the clamp voltage will be shunted to the +42 V supply by transistor Q1980.

Operational amplifier U1890A sinks a time-dependent variable current away from the base node of Q1980 that modifies the crt control-grid bias during the first few minutes of instrument operation. The circuit compensates for the changing drive characteristics of the crt as it warms up.

At power-up, capacitor C1990 begins charging through R1991 toward the +15 V supply. The output of U1890A follows the rising voltage on pin 3; and after about ten minutes (for all practical purposes), it reaches +15 V. As the output voltage slowly increases, the charging current through R1992 causes the Grid Bias voltage to gradually lower about ten volts from its power-on level. The charge on C1990 dissipates slowly; therefore, if instrument power is turned off and then immediately back on again, the output of U1890A will still be near the +15 V limit rather than starting at zero volts as when the crt was cold.

Z-AXIS DRIVE LEVEL. The variable-level Z-Axis signal (VZ OUT) establishes the lower clamping level of the ac waveform applied to the High Voltage Module. When the amplitude of the waveform drops below the Z-Axis signal, CR1930 becomes forward biased, and the ac waveform is clamped to the Z-Axis signal level. The VZ OUT level may vary between +8 V and +75 V, depending on the setting of the front-panel INTENSITY and READOUT INTENSITY controls.

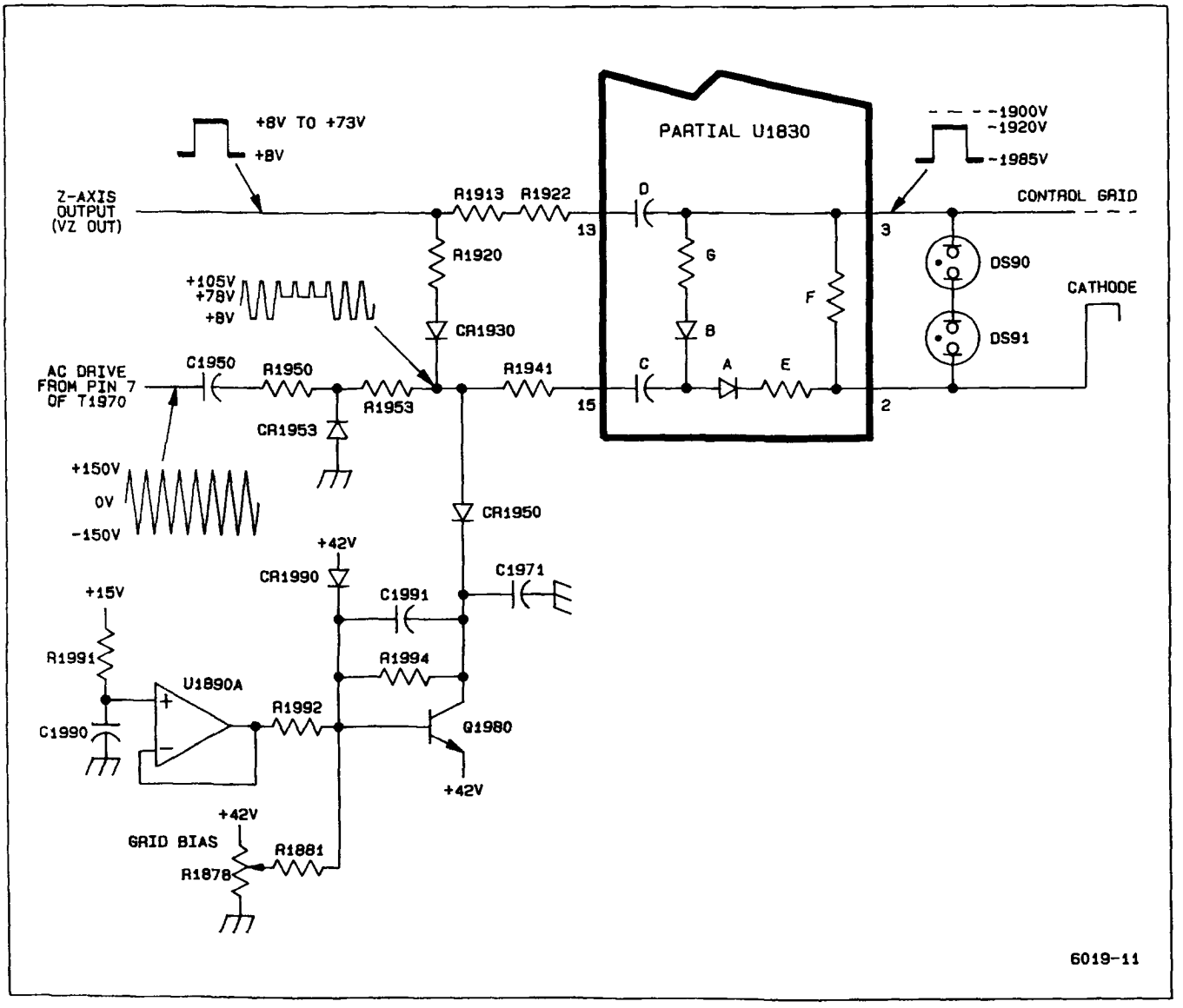

Figure 3-9. Dc restorer circuit (2465B only).

The ac waveform, now carrying both the grid-bias information and the Z-Axis drive information, is applied to a DC Restorer circuit in the High Voltage Module where it is raised to the high-voltage levels of the crt control grid.

DC RESTORATION. The DC Restorer circuit in the High Voltage Module is referenced to the crt cathode voltage via a connection within U1830. Capacitor C (in Figure 3-9), connected to pin 15 of U1830, initially charges to a level determined by the difference between the Z-Axis signal level and the crt cathode potential. The Z-Axis signal sets the level on the positive plate of capacitor C through R1920, CR1930, and R1941; the level on the negative plate is set by the crt cathode voltage through resistor E and diode A. Capacitor D is charged to a similar dc level through resistors F, R1922, and R1913.

When the ac waveform applied to pin 15 begins its transition from the lower clamped level (set by the Z-Axis signal) towards the upper clamped level (set by the Grid Bias potentiometer), the charge on capacitor C increases. The additional charge is proportional to the voltage difference between the two clamped voltage levels.

When the ac waveform begins its transition from the upper clamped level back to the lower clamped level, diode A becomes reverse biased. Diode B becomes forward biased, and an additional charge proportional to the negative excursion of the ac waveform (difference between the upper clamped level and the lower clamped level) is added to capacitor D through diode B and resistor G. The amount of change added to capacitor D depends on the setting of the front-panel INTENSITY control, as it sets the lower clamping level of the ac waveform. This added charge determines the potential of the control grid with respect to the crt cathode.

The potential difference between the control grid and the cathode controls the beam current and thus the display intensity. With no Z-Axis signal applied (INTENSITY control off), capacitor D will be charged to its maximum negative value, since the difference between the two clamped voltage levels is at its maximum value. This is the minimum intensity condition and reflects the setting of the Grid Bias potentiometer. During calibration, the Grid Bias pot is adjusted so that the difference between the upper clamping level (set by the Grid Bias pot) and the "no signal" level of the Z-Axis drive signal (VZ OUT) produces a control grid bias that barely shuts off the crt electron beam.

As the INTENSITY control is advanced, the amplitude of the square-wave Z-Axis signal increases accordingly. This increased signal amplitude decreases the difference between the upper and lower clamped levels of the ac waveform, and less charge is added to capacitor D. The decreased voltage across capacitor D decreases the potential difference between the control grid and the cathode, and more crt beam current is allowed to flow. Increased beam current increases the crt display intensity.

During the periods that capacitor C is charging and discharging, the control-grid voltage is held stable by the long-time-constant discharge path of capacitor D through resistor F. Any charge removed from capacitor D during the positive transitions of the ac waveform will be replaced on the negative transitions.

The fast-rise and fast-fall transitions of the Z-Axis signal are coupled to the crt control grid through capacitor D. This ac-coupled fast-path signal quickly sends the crt electron beam to the new intensity level, then the slower DC Restorer path "catches up" to handle the dc and low-frequency components of the Z-Axis drive signal.

Neon lamps DS90 and DS91 prevent arcing inside the crt should the control grid potential or cathode potential be lost for any reason.

CRT Control Circuits

The CRT Control circuits provide the various potentials and signal attenuation factors that set up the electrical elements of the crt. The control circuitry is divided into two separate categories: (1) level setting and (2) signal handling. The level setting circuitry produces voltages and current level necessary for the crt to operate, while the signal-handling portion is associated with changing crt signal levels.

LEVEL-SETTING CIRCUITRY. Operational amplifier U1890B, transistor Q1980, and associated components form an edge-focus circuit that sets the voltages on the elements of the third quadrapole lens. The positive lens element is set to its operating potential by Edge Focus adjustment pot R1864 (via R1897). This voltage is also divided by R1893 and R1982 and applied to the non-inverting input of U1890B to control the voltage on the other element of the lens.

The operational amplifier and transistor are configured as a feedback amplifier, with R1891 and R1990 setting the stage gain. Gain of the amplifier is equal to the attenuation factor of divider network R1893 and R1892, so total overall gain of the stage from the wiper of R1864 to the collector of Q1890 is unity. The offset voltage between lens elements is set by the ratio of R1891 and R1990 and the +10 V reference applied to R1990. This configuration causes the two voltages applied to the third quadrapole lens to track each other over the entire range of Edge Focus adjustment pot R1864.

Other adjustable level-setting circuits include Y-Axis Alignment pot R1848, used to rotate the beam alignment after vertical deflection. This adjustment controls the amount of current through the Y-Axis Alignment coil around the neck of the crt and is set to produce precise perpendicular alignment between x- and y-axis deflections. The TRACE ROTATION adjustment R975 is a front-panel screwdriver-adjustable control. The effect of the adjustment is similar to the Y-Axis Alignment pot, but when adjusted, it rotates both the x-axis and the y-axis deflections of the trace on the face of the crt. A final adjustable level-setting control is the Geometry pot R1870, adjusted to optimize display geometry. The potential at pin 8 for the vertical shield internal to the crt is produced by zener diode VR1891 and associated components.

SIGNAL-HANDLING CIRCUITRY. The crt termination adjustment R1501 is set to match the loading characteristics of the crt's vertical deflection structure to the Vertical Output Amplifier.

HIGH VOLTAGE POWER SUPPLY AND MCP-CRT FOR 2467B ONLY

The High-Voltage Supply and CRT circuit, diagram <8> 2467B, provides to the MCP-CRT (Micro-Channel Plate Cathode-Ray-Tube) the high voltage levels and necessary control circuitry for proper operation. The MCP-CRT produces high brightness on low rep-rate transient waveforms while limiting the brightness of high-rep rate waveforms.

The circuitry consists of the 2467B MCP-Cathode Ray Tube, MCP Bias Supply, High Voltage Oscillator, the Cathode Supply, the High Voltage Regulator, the DC Restorer, the Anode Current Limiter and Multiplier, the Focus Circuitry, and the various CRT Control circuits.

2467B MCP-CRT

The MCP-CRT has a Micro-Channel Plate element added between the PDD Lens and CRT Screen to multiply electrons, therefore boosting CRT performance. A low bias voltage across this element causes the electron multiplication to be low. Raising the bias voltage across the Micro-Channel Plate increases the multiplication of electrons going through the MCP. This higher bias voltage increases the MCP-CRT viewable writing rate a thousand times over a conventional crt. Full intensity drive to the MCP-CRT increases both the cathode current and the bias voltage across the MCP electron multiplier.

MCP-Bias Supply

The MCP-Bias Supply provides a variable bias voltage across the MCP (Micro-Channel Plate) element of the CRT. The MCP Bias Supply voltage is set by Intensity control information (DIR input voltage) and MCP Bias control R4365. As the Intensity control voltage is increased from minimum to maximum the MCP Bias Supply also increases from minimum to maximum. When the DIR input is between 0 to +2.5 V the MCP Bias stays at its minimum voltage. When the DIR input is varied between +2.5 V to +5 V maximum the MCP Bias voltage linearly follows the DIR input voltage and increases by about 400 V.

MCP-BIAS-SUPPLY VOLTAGE REGULATOR. The MCP-Bias-Supply Voltage Regulator consists of non-inverting operational amplifier U4367B and associated components. The regulator monitors the MCP-Bias-Supply output voltage at Test Point 4301 and varies the bias point of switching transistor Q4460 to hold the MCP-Bias-Supply DC voltage in regulation.

When the MCP-Bias-Supply output voltage is at the proper level, the sum of the currents through R4377 (MCP Bias), R4378 (intensity control, DIR), and R4380 (feedback resistor) hold the voltage developed across C4377 at zero volts. This balance condition sets base drive to Q4460 via regulator U4367B. Varying the base drive to Q4460 holds the rectified and filtered secondary voltage in regulation.

If the MCP-Bias-Supply output voltage level (T4480 pin 14) is too negative, a slightly negative voltage will develop across C4377. This voltage causes the output of regulator U4367B to move negative. The negative shift charges capacitor C4470 to a different level, around which the induced feedback voltage at the base-drive winding will swing. The added negative bias causes Q4460 to turn on earlier in the oscillation cycle, causing a stronger induced current pulse in the secondary winding. The increased current in the secondary winding increases (makes less negative) the secondary voltage (T4480 pin 14) until the MCP-Bias-Supply output voltage returns to the balanced condition (zero volts across C4377). Opposite action occurs if the MCP-Bias-Supply output voltage is too positive.

Intensity of the MCP Bias Supply is controlled by U4367A and associated components. Operational amplifier integrator U4367A has a DC gain of −4. The input is offset through R4461 to cause the Output voltage to be Zero volts when the DIR input is at +2.5 Volts (output range is ±10 V). Only the negative voltage out of U4367A, through CR4374 and R4378, changes the input current to regulator U4367B. This negative voltage is amplified and inverted by regulator U4367B, oscillator Q4460, and transformer T4460, increasing the MCP-Bias supply output voltage up to 400 Volts.

MCP-BIAS-SUPPLY OSCILLATOR. The MCP-Bias-Supply Oscillator transforms power obtained from the −15 volt unregulated supply to the voltage necessary to bias the MCP-CRT element of the crt. The circuit consists of transformer T4480, transistor Q4460, and associated components. The low-voltage oscillations in the primary winding of T4480 are raised by transformer action to a high-voltage in the secondary winding. This ac secondary voltage is half-wave rectified by CR4490, filtered by C4390, and then applied across the MCP.

Oscillation occurs due to the positive feedback from the primary winding (pin 3 to pin 4) to the smaller base-drive winding (pin 2 to pin 5) for transistor Q4460. The frequency of oscillation is about 86 kHz, and is determined primarily by the resonant frequency of transformer T4480.

Initially, when power is applied, the MCP-BIAS-voltage regulator circuit detects that the MCP voltage is too low and pulls pin 2 of transformer T4480 negative. The negative level is applied to transistor Q4460 through the transformer base-drive winding and forward biases it. Current begins to flow in the primary winding through the transistor collector-to-emitter circuit and induces a magnetic field around the transformer primary winding. The increasing magnetic field induces a current in the base-drive winding that further increases the base drive to the transistor. This in-phase feedback causes current in Q4460 to increase until the primary winding current reaches its maximum value. As the rate of change of the primary current peaks and then reverses, the induced magnetic field begins to decay. This decreases the base-drive current and begins turning Q4460 off.

As Q4460 is starting to turn off, the magnetic field around the primary winding continues to collapse at the resonant frequency rate of the transformer. This induces into the base-drive winding a voltage that completely turns off the transistor. The collapsing magnetic field goes to zero, then builds in the opposite direction to a maximum before collapsing again (resonant flywheel effect). This sequence of events occurs repetitively as the circuit continues to oscillate.

The oscillating magnetic field in the primary winding couples power into the secondary winding of the transformer. The amplitude of the voltage induced in the secondary winding is a function of the turns ratio of the transformer windings.

High-Voltage Oscillator

The High-Voltage Oscillator transforms power obtained from the −15 volt unregulated supply to the various ac levels necessary for the operation of the crt circuitry. The circuit consists of transformer T4340, switching transistor Q4350, and associated circuitry. The low-voltage oscillations set up in the primary winding of T4340 are raised by transformer action to high-voltage levels in the secondary windings. These ac secondary voltages are applied to the DC Restorer, the Cathode Supply, and the anode multiplier circuits.

Oscillation occurs due to the positive feedback from the primary winding (pin 4 to pin 5) to the smaller base-drive winding (pin 2 to pin 3) for transistor Q4350. The frequency of oscillation is about 58 kHz, and is determined primarily by the resonant frequency of the transformer.

When power is first applied, the High-Voltage Regulator circuit detects that the negative crt cathode voltage is too positive and pulls pin 2 of transformer T4340 negative. The negative level forward biases transistor Q4350 via the base-drive winding of the transformer. Current begins to flow in the primary winding through transistor Q4350, inducing a magnetic field around the transformer primary winding. The increasing magnetic field induces a current in the base-drive winding that further increases the base drive to the transistor. This in-phase feedback causes current in Q4350 to increase until the primary winding current reaches its maximum value. As the rate of change of the primary current peaks and then reverses, the induced magnetic field begins to decay. This decreases the base-drive current and begins turning Q4350 off.

As Q4350 is beginning to turn off, the magnetic field around the primary winding continues to collapse at the resonant frequency rate of the transformer. This induces into the base-drive winding a voltage that completely turns off the transistor. The collapsing magnetic field goes to zero, then builds in the opposite direction to a maximum before collapsing again (resonant flywheel effect). This sequence of events occurs repetitively as the circuit continues to oscillate.

The oscillating magnetic field in the primary winding couples power into the secondary windings of the transformer. The amplitude of the voltages induced in the secondary windings is a function of the turns ratios of the transformer windings.

Cathode Supply

The Cathode Supply is composed of a voltage-doubler and a RC filter network contained within High-Voltage Module U4310. This supply produces the −2 kV accelerating potential applied to the CRT cathode. This supply also provides voltage to the focus range divider, the wall band, and the MCP.

The −2 kV supply is monitored by the High Voltage Regulator to maintain the regulation of all voltages from the High Voltage Oscillator.

The 2 kV peak-to-peak AC voltage from pin 9 of transformer T4340 (1KV peak) is applied to a conventional voltage-doubler circuit at pin 7 of the High Voltage Module. The negative output DC value to the CRT cathode is about equal to the AC peak-to-peak input voltage.

On the positive half cycle, the input capacitor at U4310 pin 7 (0.0047 μf) is charged to 1 kV through the forward-biased diode connected to ground at pin 9 of U4310. The following negative half-cycle adds 1 kV to the 1 kV DC stored on the input capacitor. Thus producing a total peak voltage of −2 kV which is applied to the cathode of the second diode. This forward biases the second diode charging the 0.01-μf capacitor (connected across the two diodes) to −2 kV. Two RC filters follow the negative voltage doubler to reduce the ac ripple.

Neon lamp DS4410 (a 180 V Surge Arrestor) prevents arcing between the grid and cathode inside the crt should the control grid potential or cathode potential be lost.

High Voltage Regulator

The High Voltage Regulator consists of inverting operational amplifier U4366A and associated circuitry. The regulator monitors the crt Cathode Supply voltage and varies the bias point of the switching transistor in the High Voltage Oscillator to hold the Cathode Supply voltage at the nominal level. Since the output voltages at the other secondary winding taps are related by turns ratios to the Cathode Supply voltage, all voltages are held in regulation.

When the Cathode Supply voltage is at the proper level (−2 kV), the sum of the currents through R4334 and the 19-MΩ resistor internal to High Voltage Module U4310 holds the voltage developed across C4344 at zero volts. This balance condition sets the base drive of Q4350 via regulator U4366A. Varying the base drive to Q4350 holds the secondary voltages in regulation.

If the Cathode Supply voltage level is too positive, a slightly positive voltage will develop across C4344. This voltage causes the output of regulator U4366A to move negative. The negative shift charges capacitor C4363 to a different level, around which the induced feedback voltage at the base-drive winding will swing. The added negative bias causes Q4350 to turn on earlier in the oscillation cycle, and a stronger current pulse is induced in the secondary windings. The increased power in the secondary windings increases the secondary voltages until the Cathode Supply voltage moves more negative, returning the voltage across C4344 back to zero (balanced condition). Opposite action occurs if the Cathode Supply voltage is too negative.

DC Restorer

The DC Restorer provides a negative bias to the crt control-grid and couples both the dc and the low-frequency components of the Z-Axis drive signal to the crt control grid. This circuit allows the Z-Axis Amplifier to control the display intensity by coupling the low-voltage Z-Axis drive signal (VZ OUT) to the elevated crt control-grid potential (about −2 kV).

The DC Restorer circuit (Figure 3-10) operates by impressing the crt grid bias setting and the Z-Axis drive signal onto the high voltage AC waveform. The shaped ac waveform is then coupled to the crt control-grid through a coupling capacitor that restores the dc components of the signal to the control grid.

GRID BIAS LEVEL. An ac drive voltage of approximately 300 V peak-to-peak is applied to the DC Restorer circuit from pin 1 of transformer T4340 (Test Point 71). The sinusoidal waveform is current limited and DC level shifted by coupling capacitor C4343. The negative half of the ac drive signal is clipped by diode CR4342.

The positive half cycle is applied to the junction of CR4423 and CR4422 via resistor R4341. Clamping diode CR4423, Transistor Q4331, and associated components form a voltage clamp circuit that limits the positive swing of the ac waveform at Test Point 72.

Transistor Q4331 is an inverting operational amplifier, with C4332 and R4336 as the feedback elements. The feedback current through R4336 develops a voltage across the resistor that is positive with respect to the +42.6 V on the base of the transistor. The value of this voltage plus the diode drop across CR4423 sets the upper clamping threshold. Grid Bias potentiometer R4354 sinks varying amounts of current away from the base node of the transistor operational amplifier setting the feedback current through R4336. The adjustment range of the pot can set the nominal clamping level between +71 V and +133 V.

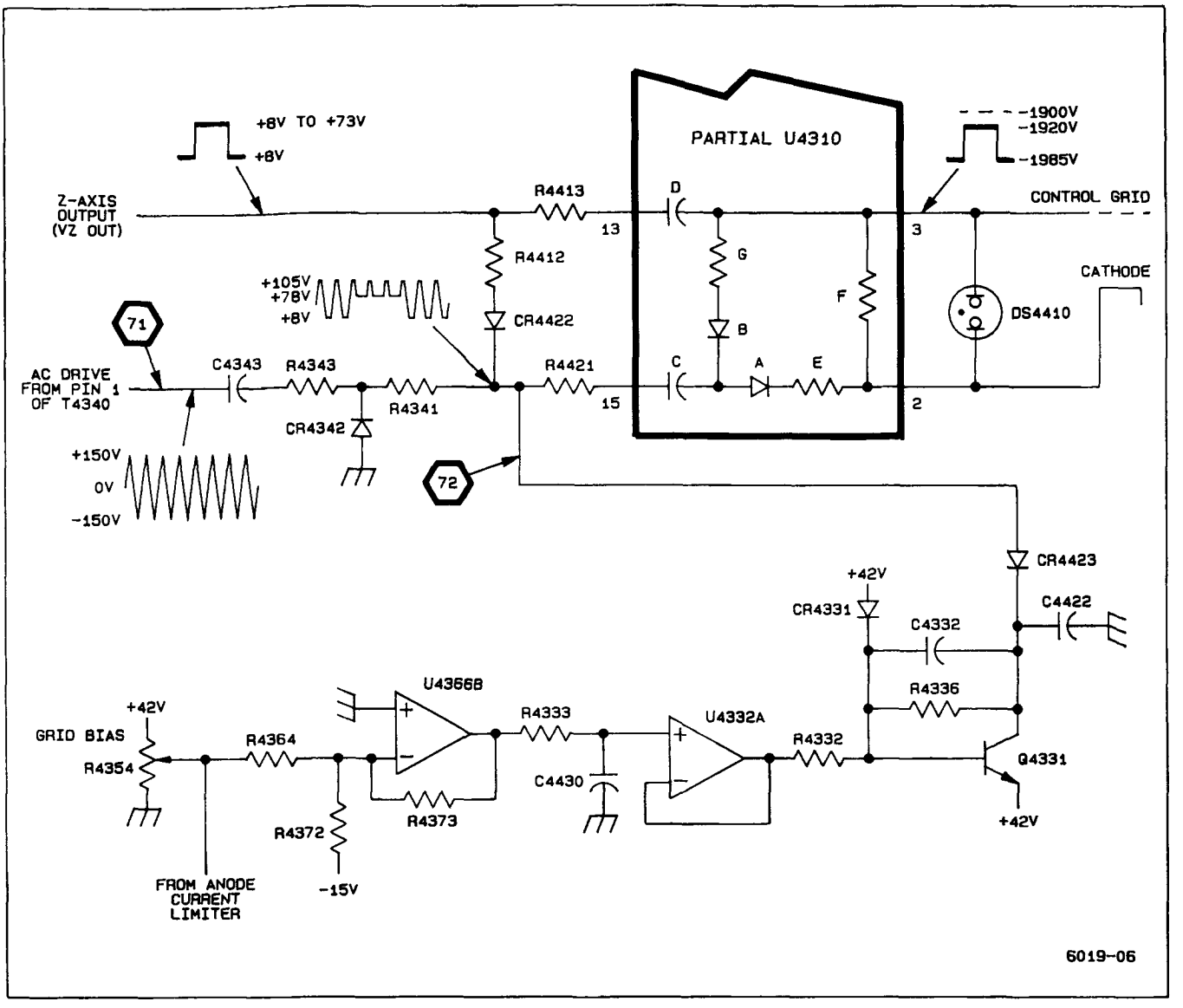

Figure 3-10. Dc restorer circuit (2467B only).

During the time diode CR4423 is reverse biased (not clamping the positive peaks), transistor Q4331 is kept biased in the active region by the charge retained on C4422 from the previous positive clamping cycle. As the positive amplitude of the ac waveform at Test Point 72 exceeds the voltage at the collector of Q4331, diode CR4423 becomes forward biased, and the ac waveform is clamped at that level. Any current greater than that required to maintain the clamp voltage will be shunted to the +42-V supply by transistor Q4331.

Operational amplifier U4332A sinks a time-dependent variable current away from the base of Q4331 that modifies the crt grid bias during the first few minutes of instrument operation. The circuit compensates for the changing grid drive characteristics of the crt as it warms up.

At power-up, capacitor C4430 begins charging through R4333 toward the Positive voltage on pin 7 of U4366B. The voltage is relative to the setting of grid bias potentiometer R4354. The output of U4332A follows the rising voltage on pin 3 and after about ten minutes (for all practical purposes) reaches the voltage on pin 7 of U4366B. As the output voltage slowly increases, the charging current through R4332 causes the Grid Bias voltage to gradually decrease from its power-on level. If instrument power is momentarily turned off and then back on, the crt cathode

will still be warm when power is restored. The output of U4332A will still be near the voltage on U4366B pin 7 rather than starting over at zero volts as when the crt cathode was cold, because the charge on C4430 dissipates slowly during the power off time.

Z-AXIS DRIVE LEVEL. The variable-level Z-Axis signal (VZ OUT) establishes the lower clamping level of the ac waveform applied to the High Voltage Module. When the negative peaks of the AC waveform are below the Z-Axis signal level, CR4422 becomes forward biased, and the negative ac waveform peaks are clamped at the Z-Axis signal level. An image of the Z-axis signal can be seen in the shaped ac waveform on Test Point 72. The VZ OUT level may vary between +8 V and +75 V, depending on the settings of the front-panel INTENSITY, READOUT INTENSITY, Max Grid Drive controls, and Sweep mode.

The shaped ac waveform, now carrying both the grid-bias and the Z-Axis drive information, is applied to a DC Restorer circuit in the High Voltage Module where it is raised to the high-voltage levels of the crt cathode, and it supplies the negative bias to the crt control-grid.

DC RESTORATION. The DC Restorer circuit in the High Voltage Module is referenced to the crt cathode voltage via a connection to pin 2 of U4310.

Capacitor C (in Figure 3-10), connected to pin 15 of U4310, initially charges to a level determined by the difference between the Z-axis signal level (Test Point 72) and the crt cathode potential through R4421, diode A, and resistor E. Capacitor D is charged to a similar dc level through resister F and R4419.

When the shaped ac waveform applied to pin 15 begins its transition from the lower clamped level (set by the Z-Axis signal) towards the upper clamped level (set by the Grid Bias pot.), the charge on capacitor C increases through diode A and resistor E. The additional charge is proportional to the voltage difference between the two clamped voltage levels.

The potential difference between the control grid and the cathode controls the beam current and thus the display intensity. With no Z-Axis signal applied (INTENSITY control off), capacitor D will be charged to its maximum negative value, since the difference between the two clamped voltage levels is at its maximum value. This is the minimum intensity condition and reflects the setting of the Grid Bias potentiometer. During calibration, the Grid Bias pot is adjusted so that the difference between the upper clamping level (set by the Grid Bias pot) and the "no signal" level of the Z-Axis drive signal (VZ OUT) produces a control grid bias that barely shuts off the crt electron beam.

As the INTENSITY control is advanced, the amplitude of the square-wave Z-Axis signal increases accordingly. This increased signal amplitude decreases the difference between the upper and lower clamped levels of the ac waveform. This decreases the potential difference between the control grid and the cathode, and more crt beam current is allowed to flow. Increased beam current increases the crt display intensity.

The fast-rise and fast-fall transitions of the Z-Axis signal are coupled to the crt control grid through capacitor D. This ac-coupled fast-path signal quickly sends the crt electron beam to the new intensity level, then the slower DC Restorer path through capacitor C "catches up" to handle the DC and low-frequency components of the Z-Axis drive signal.

Anode Current Limiter and Multiplier

The Anode Current Limiter keeps maximum Intensity to a comfortable viewing level. It also protects the Micro Channel Plate element from excessive aging. The anode multiplier provides the CRT with the necessary high voltage accelerating potential.

ANODE CURRENT LIMITER. The maximum anode current is limited to a safe value during high intensity drive conditions by increasing the crt control-grid DC bias. This increased grid bias reduces the cathode current which limits the maximum number of electrons arriving at the MCP, the Anode, and the CRT screen.

The circuit is composed of Q4300 and Q4301 and associated circuitry to form a comparator which increases crt grid bias at high intensity settings, and also limits maximum intensity.

Q4301 is biased at −5 V and is off at low to medium crt intensity settings. Peak anode current is sampled and averaged across R4300 and C4300. Darlington Emitter Follower Q4300 is configured as a voltage follower to current converter. The voltage difference between emitter of Q4300 and emitter Q4301 is converted to current through R4304. At low crt intensity settings the base of Q4300 is near zero and the emitter is about −1.5 volts. Therefore, all current flowing through R4306 flows through Q4300. During high intensity drive conditions CRT anode current produces an average voltage greater than −4.4 Volts across R4300, C4300 and the base of Q4300. When the emitter is greater than about −5.8 volts, part of the current flowing in Q4300 starts flowing through R4304 and into emitter of Q4301. The increasing collector current through Q4301 goes into the base node of inverting operational amplifier Q4331 and raises the grid bias clamping voltage on the collector of Q4331. This increasing clamping voltage increases the CRT grid bias until the anode current is limited. Operation of crt grid biasing is explained in detail in Grid Bias Level.

ANODE MULTIPLIER. The Anode Multiplier circuit (also contained in High Voltage Module U4310) uses a 6X voltage multiplier to produce the +15 kV CRT anode potential. It can be thought of as three voltage-doubler circuits in series.

The first negative half-cycle charges the 0.001-μf input capacitor (connected to pin 8 of the High Voltage Module) to a value of 2.5 kV through the diode connected to pin 10. The following positive half cycle adds its voltage to the voltage stored on the input coupling capacitor via the second diode, generating +5 kV on the 0.001-μf filter capacitor connected to pin 10 of U4310. The following cycles continue to boost up succeeding capacitors to values 2.5 kV higher than the preceding capacitor until all six capacitors are fully charged. This places the output of the last capacitor in the multiplier at +15 kV above ground potential. Once the multiplier reaches operating potential, succeeding cycles replenish current drawn from the Anode Multiplier by the crt beam. The 1-MΩ resistor in series with the output to the CRT Anode protects the 6X multiplier by limiting the anode current to a safe value.

Focus Circuitry

The Focus Circuitry is composed of six control circuits to drive five CRT Elements. The (1) Dynamic and (2) Static Focus circuits combine to drive the crt Focusing Electrode V901 pin 4. The four remaining circuits also affect spot focusing and they are: (3) PDD Lens and Wall Band Supply to J4391. (4) Rear MCP Supply to TP4302, (5) Astigmatism to pin 12, and (6) Edge Focus to pin 8.

DYNAMIC FOCUS. The dynamic focus amplifier, in conjunction with the auto-focus circuitry of Z-Axis hybrid U950 (diagram 6), provides optimum focus of the crt beam for all settings of the front-panel INTENSITY control.

The focusing electrode dynamically tracks changes in the display intensity. The VQ OUT signal, applied to the crt through the dynamic focus amplifier consisting of Q4422, Q4402, Q4403 and associated components is exponentially related to the VZ OUT (intensity) signal.

To keep the output signal within the dynamic range of the amplifier, the input is level shifted positive by coupling capacitor C4412 and clamping diode CR4421 which limits negative signal peaks to −0.6 volts. Resistor R4414 in conjunction with feedback resistor R4411 set the inverting operational amplifier gain to less than one (−.87). Offset resistor R4415 and feedback resistor R4411 set the DC output at +60 volts. Emitter follower Q4422 provides current gain to drive voltage amplifier Q4402 which uses Q4403 as a constant current load. Coupling capacitor C4411 provides an AC signal to Q4403 to also use it as an AC voltage amplifier. The output is AC coupled to CRT pin 4 which is also supplied a high negative DC focus voltage from the static focus circuit. Current limiting resistor R4405 and diodes CR4410 and CR4411 across Q4402 and Q4403 respectively protect the transistors from CRT voltage transients.

STATIC FOCUS. During calibration, FOCUS potentiometer R976 is pre-set to mid-range. Focus Range (R4430) and ASTIG (R977) potentiometers are then set for optimum focus of the CRT beam at low intensity. After calibration the Focus Range and ASTIG pots remain as set, and the FOCUS control is positioned as required when viewing the displays at various intensity settings.

The static focus amplifier consists of shunt-feedback inverting operational amplifier Q4432 and associated components. The output of the amplifier controls the zero to −320 volts at R4431, the bottom end of the focus range divider. The negative cathode voltage is connected to R4434, the top end of the focus range divider. Static focus amplifier Q4432 inverts and amplifies the Focus control voltage, the output sets the voltage at R4431, the bottom end of the focus range divider. The wiper of R4430, the middle of the focus range divider, supplies the static focus voltage to the CRT Focusing Electrode, pin 4.

PDD LENS AND WALL BAND SUPPLY (−1 kV). The Wall Band Supply consists of high voltage transistor Q4440, four 200 V Zener diodes, and associated circuitry. Voltage divider resistors R4441 and R4442 provide −1 kV to the base of Q4440, an emitter follower pass transistor. Q4440 provides current gain and −1 kV for the PDD Lens and Wall Band CRT elements through current limiting resistor R4472. Q4440 also provides current and voltage to set the MCP Rear Supply.

MCP REAR SUPPLY (−1.1 kV). The MCP Rear Supply consists of 100-V Zener diode VR4450 which is connected to Q4440 in the Wall Band Supply, and R4440, which is connected to the −2 kV Cathode supply. It supplies −1.1-kV to the rear of the MCP through current limiting resistor R4471. Diode CR4440 protects the base of Q4440 against reverse bias conditions.

ASTIGMATISM. Initially, at the time of adjustment, the FOCUS and ASTIGmatism potentiometers are set for optimum focus of the crt beam at low intensity. After that initial adjustment, the ASTIG pot normally remains as set, and the FOCUS control is positioned as required while viewing the display.

The ASTIGmatism amplifier is composed of U4332B (operational amplifier integrator), Q4454, and associated components. The small input control voltage of zero to +5 volts DC is inverted by U4332 and the output voltage is

changed to a current through R4453 to the emitter of Q4454. Common base amplifier Q4454 is used as a current to high voltage converter with a large output swing of 85 volts (+75 volts to minus 10 volts). The output is bypassed before going through current limiting resistor R4452 to the Astigmatism grid, pin 8.

EDGE FOCUS. Edge Focus potentiometer R4342 adjusts the voltage to optimize the edge focus of the displayed waveform. The potentiometer can swing the voltage on CRT pin 12 above and below the +42 volt level on Anode 1.

MCP-CRT Control Circuits

The CRT Control circuits provide the signal attenuation factors and various level setting potentials to drive the elements of the CRT. The signal portion terminates the Vertical deflection plate delay elements and is called Vertical Termination. The three level setting circuits produce currents and voltage levels necessary for the CRT to operate properly. The Trace Rotation, Geometry, and Y-Axis Alignment complete the necessary adjustments for proper crt operation.

VERTICAL TERMINATION. CRT termination adjustment R1301 is set to match the vertical deflection plates to Vertical Output Amplifier U600 (diagram <6>, 2467B).

TRACE ROTATION. TRACE ROTATION potentiometer R975 is a front-panel screwdriver-adjustable control. It controls the amount of positive or negative current through trace rotation coil L90. The adjustment magnetically rotates both the x-axis and y-axis deflections of the CRT trace so that the trace can be aligned to the internal graticule markings.

GEOMETRY. Geometry potentiometer R4350 controls the voltage that optimizes the geometry of the displayed waveform. It can adjust the voltage on CRT pin 10 above and below the +42 volt level on Anode 1.

Y AXIS ALIGNMENT. Y-AXIS (vertical) ALIGNMENT potentiometer R4370 rotates the the beam after vertical deflection but before horizontal deflection. This adjustment controls the amount of positive or negative current through the Y-Axis Alignment coil. The coil is located between the vertical and horizontal deflection plates and is wound on the neck of the crt. Current through the coil magnetically rotates the vertical portion of the trace. The control is adjusted to produce precise perpendicular alignment between the x-axis and y-axis deflections.

LOW VOLTAGE POWER SUPPLY

The low voltages required by the instrument are produced by a high-efficiency, switching power supply. This type of supply directly rectifies and stores charge from the ac line supply; then the stored charge is switched through a special transformer at a high rate, generating the various supply voltages.

Line Rectifier

Ac line voltages of either 115 V or 230 V may provide the primary power for the instrument, depending on the setting of LINE VOLTAGE SELECTOR switch S90 (located on the instrument rear panel). Power Switch S350 applies the selected line voltage to power supply rectifier CR1011.

With the selector switch in the 115 V position, the rectifier and storage capacitors C1021 and C1022 operate as a full-wave voltage doubler. When operating in this configuration, each capacitor is charged on opposite half cycles of the ac input, and the voltages across the two capacitors in series will approximate the peak-to-peak value of the source voltage. For 230 V operation, switch S90 connects the rectifier as a conventional bridge rectifier. Both capacitors charge on both input half cycles, and the voltage across C1021 and C1022 in series will approximate the peak value of the rectified source voltage. For either configuration, the dc voltage supplied to the power supply inverter is the same.

Thermistors RT1010 and RT1016 limit the surge current when the power supply is first turned on. As current flow warms the thermistors, their resistances decrease and have little effect on circuit operation. Spark-gap electrodes E1001 and E1002 are surge-voltage protectors. If excessive source voltage is applied to the instrument, the spark-gaps conduct, and the extra current flow quickly exceeds the rating of fuse F90. The fuse then opens to protect the instrument's power supply. The EMI (electromagnetic interference) filter, inductors L1011 and L1012, capacitors C1016 and C1018, and resistors R1011, R1012, R1016 and R1018 form a line-filter circuit. This filter, along with common mode rejection transformer T1020, prevents power-line interference from entering the instrument and prevents power supply switching signals from entering the supply line.

Preregulator Control

The Preregulator Control circuit monitors the drive voltage applied to inverter output transformer T1060 and holds it at the level that produces proper supply voltages at the secondary windings.

The Preregulator Control circuit consists primarily of control IC U1030, its switching buffers, and its power supply components. The control IC senses voltage on the primary winding of T2060 and varies the "on time" of a series-switching transistor, depending on whether the sensed voltage was too high or too low. The switching transistor Q1050, rectifier CR1050, choke T1050, and capacitor C1050 form a buck-switching regulator circuit. The output voltage at W1060 is proportional to the product of the rectified line voltage on C1020-C1022 and the duty cycle of Q1050. In normal operation, Q1050 is on about one-half the time. When Q1050 is off, current flows to W1060 and T1060 through CR1050.

PREREGULATOR CONTROL POWER SUPPLY. Since the Preregulator Control network controls supply startup and preregulates the secondary supplies, an independent power source must be established for it before any of the other power supplies will operate. The independent power supply for the control circuitry is composed of Q1021, Q1022, and associated components.

Initially, when instrument power is applied, the positive plate of capacitor C1025 is charged toward the positive rectified line voltage through R1020. The voltage at the base of Q1022 follows at a level determined by the voltage divider composed of R1022, R1024, CR1023, and the load within U1030. When the voltage across C1025 reaches about +21 V, the base voltage of Q1022 reaches +6.8 V and Q1022 turns on, saturating Q1021. The +21 V on the emitter of Q1021 appears at its collector and establishes the positive voltage supply for the Preregulator IC. With Q1021 on, R1024 is placed in parallel with R1022, and both Q1022 and Q1021 remain saturated.

The +21 V level begins to drain down as the control IC draws current from C1025. If the Preregulator Control IC doesn't start the switching supply (and thus recharge C1025 and C1023 via CR1022) by the time the voltage across C1025 reaches about +8 V, Q1021 will turn off. Resistor R1024 pulls the base of Q1022 low and turns that transistor off also. (Capacitor C1025 would only discharge low enough to turn off the transistors under a fault condition.) In this event, C1025 would then charge again to +21 V, and the start sequence would repeat. Normally, the control IC will start Inverter action before the +8 V level is reached, and current is drawn through T1050 via Q1050. This induces a current in the secondary winding of T1050 via Q1050. This induces a current in the secondary winding of T1050 and charges C1025 positive via diode CR1022. The turns ratio of T1050 sets the secondary voltage at approximately +15 V; and, as long as the supply is being properly regulated, C1025 will be charged up to that level and held there.

PREREGULATOR START-UP. As the supply for the Preregulator Control IC is established, an internal switching oscillator begins to run. The oscillator generates a repetitive triangular wave (as shown in Figure 3-11) at a frequency determined primarily by R1032 and C1032. The simplified schematic of Figure 3-12 illustrates the voltage control functions of U1030.

As the Preregulator power supply turns on, capacitor C1034 charges from the +5 V reference level toward ground potential through R1034 and R1037. As it does, the voltage at pin 4 (one input of Dead-Time Comparator U1) will pass through the positive-peak value of the triangular waveform on the other input of the Dead-Time Comparator. The comparator will then begin outputting narrow pulses that become progressively wider as the voltage on pin 4 settles to zero volts. These pulses drive switching transistor Q1050, and their slow progression from narrow to wide causes the various secondary supplies to gradually build up to their final operating levels. The slow buildup prevents a turn-on current surge that would cause the current-limit circuitry to shut down the supply.

During startup, capacitor C1072 acts as a substantial load, and a relatively large current flows in the windings of T1050 for the first few cycles of Preregulator switching. These strong current pulses ensure that storage capacitor C1066 becomes charged sufficiently to start the Inverter Drive circuit. Once the Inverter Drive stage is operating, the normal switching current through T1050 maintains the required charge on C1066. (The Inverter Drive power supply is discussed later in this description.)

Dead-Time Comparator U1 is referenced at approximately 0.1 V above the ground level at pin 4 (established when C1034 becomes fully charged) and outputs a narrow, negative-going pulse that turns off switching transistor Q1050 for a portion of each switching cycle. This off time ensures that flip-flop U1064B in the Inverter Drive circuit toggles every cycle (thereby maintaining the proper duty cycle), independent of the voltage conditions being sensed by the remainder of the voltage control circuitry.

PREREGULATION. Once the initial charging at power-up is accomplished, as just described, the voltage-sensing circuitry begins controlling the Inverter switching action. The actual voltage sensing is done by error amplifier U2. The level at the center tap of output transformer T1060 is applied to pin 1 and is compared to the reference established by R1045 and R1046 at pin 2. If the sensed level at pin 1 is lower than the reference level (as it will always be for the first few switching cycles), the of error-amplifier U2 will be LO. The LO, applied to the inverting input of U3, results in a long-duty-cycle drive signal to

transistor Q1050 (via CR1030). Since the Inverter Drive stage will alternately turn either Q1060 or Q1070 on, relatively large current pulses will result in the primary winding of inverter output transformer T1060.

These large current pulses, over the period of a few cycles, will increase the charge on the storage capacitors on the secondary side of the transformer and will reduce the current demand on the inverter output transformer. As the demand increases, the voltage across the primary winding will increase until it reaches the point where the two inputs of U2 are at the same potential. At this point, the output of U2 (to U3) will settle to a level approximately equal to the midpoint of the triangular waveform applied to the other input of U3. The resulting drive signal has an approximate 50% duty cycle and will respond to changes in either the ac line voltage or supply load conditions. Depending on the output levels sensed, the duty cycle of the drive signal will change (sensed level rises or falls with respect to the triangular waveform) to hold the secondary supplies at their proper levels.

Opto-isolator U1040 and resistor R1044 form a control network that allows a voltage sensed at the feedback input (FB) to slightly alter the voltage-sense reference applied to pin 2 of U2. The FB signal is generated by the +5 V Inverter Feedback amplifier (U1371, diagram 10) and is directly related to the level of the $+5V_D$ supply line.

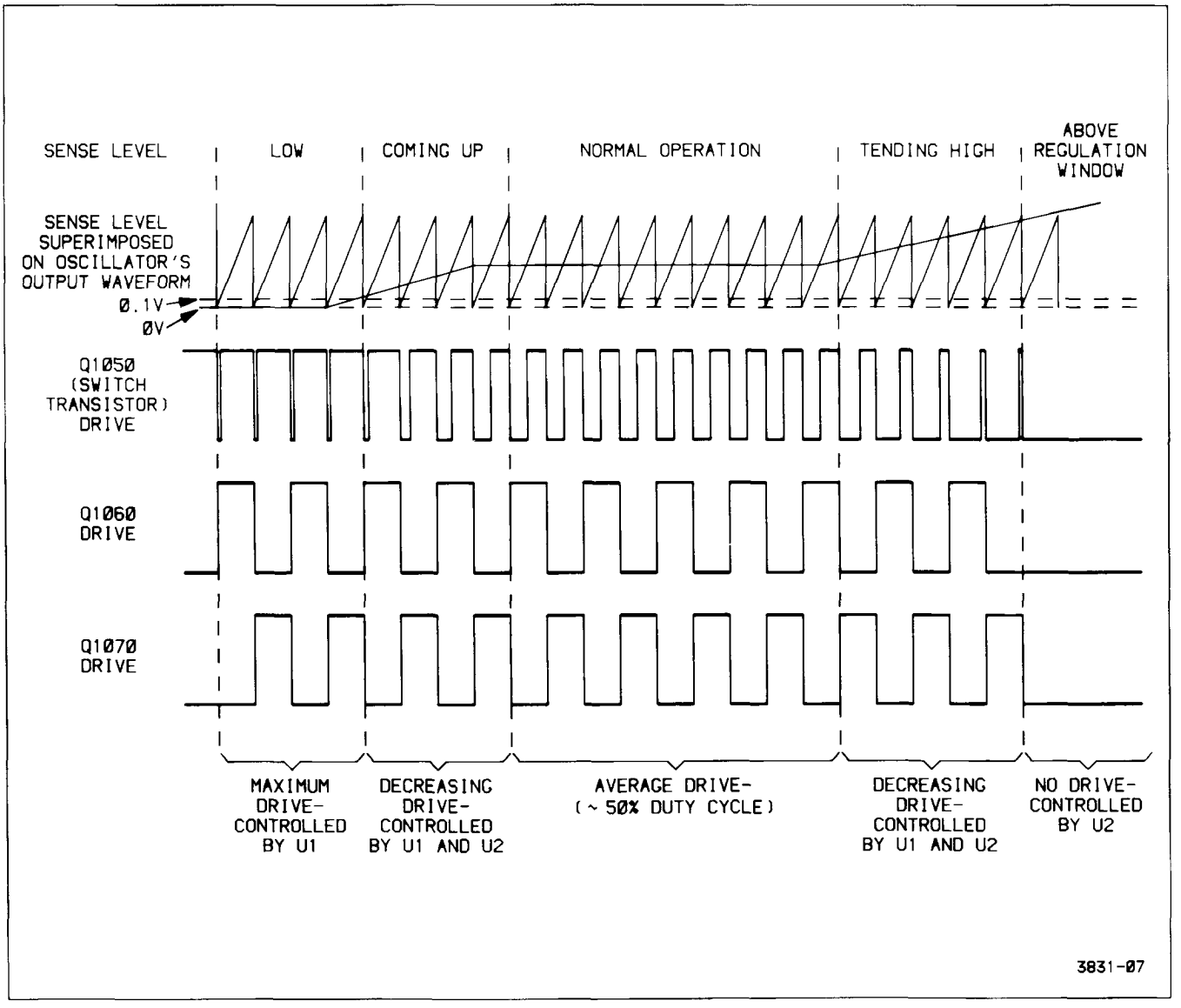

Figure 3-11. Timing relationships of the Inverter Drive signals.

Base drive to the shunt transistor (in opto-isolator U1040) is increased should the FB signal go below its nominal value. Additional current is shunted around R1045 (via R1044) and raises the voltage-sense reference level to error-amplifier U2. This increases the voltage applied to the primary winding of the output transformer, since U2 sensing depends on a balanced condition. Higher currents are induced in the secondary windings, and the secondary voltages begin to return to their nominal values. As the $+5V_D$ line returns to its nominal level, base drive to the shunt transistor will be reduced and the voltage in the primary winding will follow. Should the FB signal level tend too high, opposite control responses occur. Further information about the FB signal is given in the +5 V Inverter Feedback description.

Error amplifier U4 and the voltage divider composed of R1035 and R1031 provide a backup sensing circuit. Its operation is similar to that of error amplifier U2, just described, but it senses at a slightly higher level. As long as U2 is operating properly, U4 will be inactive. However, should a failure occur in the U2 sensing circuitry, the voltage on the primary winding of T1060 will rise to the sensing level at pin 15 of U4. Sense amplifier U4 will then take over, preventing a damaging over-voltage condition.

Inverter Drive

The Inverter Drive circuit performs the necessary switching to drive the inverter output transformer. Like the

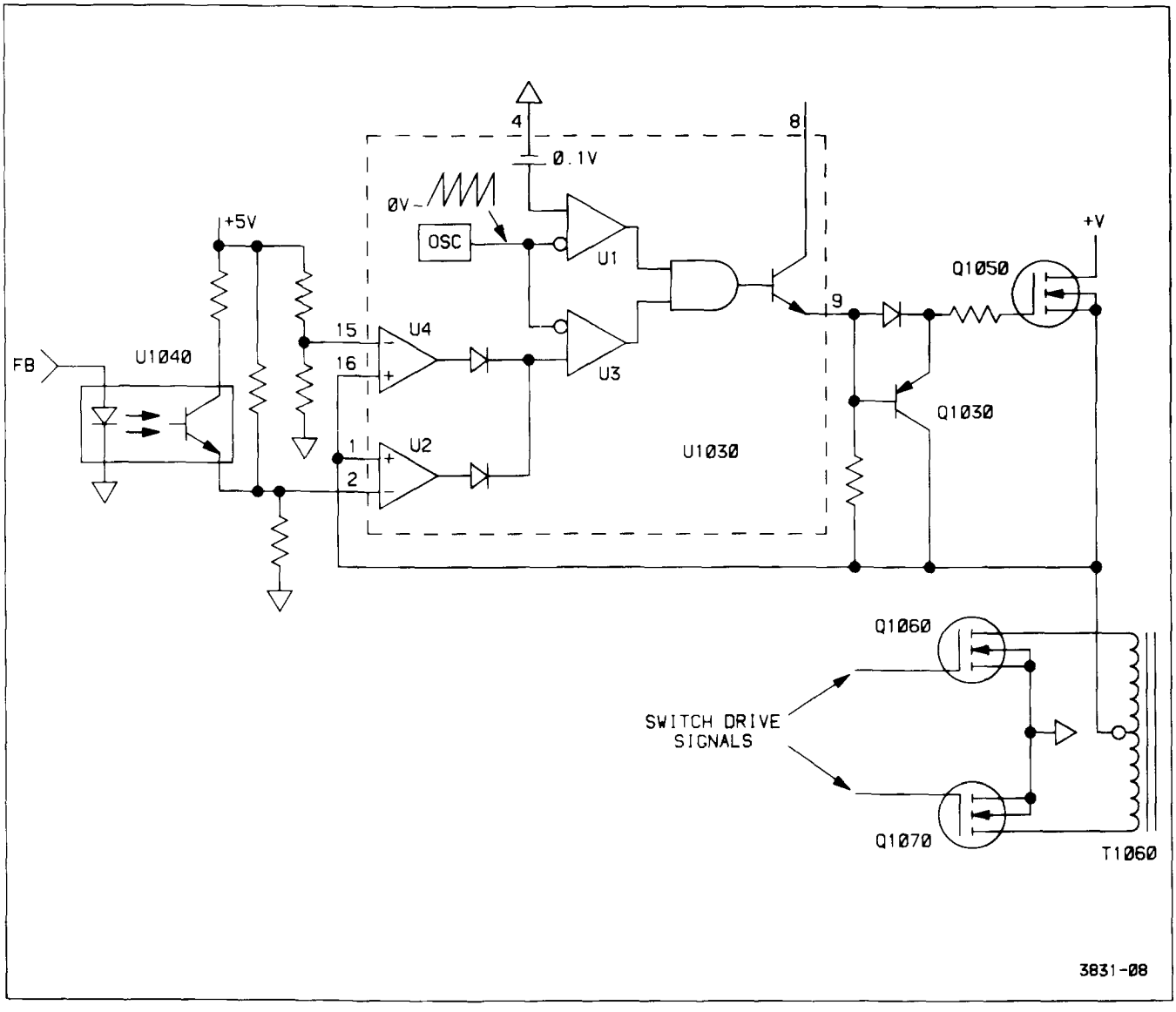

Figure 3-12. Simplified schematic of control network.

Preregulator Control IC, the Inverter Drive circuit requires an independent power supply, since it must be operational before any of the secondary supply voltages can be generated.

INVERTER DRIVE POWER SUPPLY. This power supply consists of Q1062, VR1062, and their associated components. As power is first applied, the initial charging current through T1050 induces a current in the transformer secondary winding (pins 8 and 9). The alternating current is rectified by the diode bridge composed of CR1062, CR1063, CR1064, and CR1065 and stored in C1066, providing power for the Inverter Drive circuitry.

When the Preregulator Control IC turns switching transistor Q1050 on for the first time, the charge stored on C1066 during the initial charging period is sufficient to properly turn on one of the current-switching transistors (either Q1060 or Q1070) for the first cycle. After that, the alternating drive signals continue to induce current into the secondary winding of T1050 to provide operating power as long as the instrument is turned on.

The current rectified by the diode bridge and stored on capacitor C1066 is regulated down to the required voltage level by R1061, VR1062, and Q1062. Zener diode VR1062 references emitter-follower Q1062 and holds the supply output at approximately +11.4 V.

INVERTER DRIVE GENERATOR. The Inverter Drive generator consists of U1062, U1064, U1066, switching transistors Q1060, Q1070 and their associated components. The circuitry alternately switches current through each leg of the output transformer (T1060) primary winding and produces the ac current required for transformer action.

Out-of-phase input signals to comparator U1062C come from two resistive voltage dividers place in either leg of one secondary winding of T1050. The comparator detects the phase changes (crossover points) of the secondary current caused as Q1050 switches on and off. Every complete on-off cycle of Q1050 produces a positive clock at pin 14 of U1062C that toggles flip-flop U1064B. The toggling alternately turns switching transistors Q1060 and Q1070 on, each with an approximate 50% duty cycle.

Comparators U1062A and U1062B, at the Q and $\overline{Q}$ output of the flip-flop, detect the precise crossing point of the toggling drive signals and ensure that only one switching transistor will be on at any one time. These mutually-exclusive drive signals are buffered by inverters U1066A and U1066B and applied to switching transistors Q1060 and Q1070 to alternately turn them on and off at one-half the switching rate of Q1050. By alternately switching opposite ends of the primary winding to ground, the current flowing through switching transistor Q1050 will flow alternately in each half of the primary winding. This produces ac voltages at the secondary windings that are then rectified, providing the various unregulated dc supply voltages.

Current Limit

The Current Limit circuit, composed of transistor Q1040 and the associated components, limits the maximum current flow in the output transformer to about 1 ampere. Resistor R1040 (connected to the Preregulator Control IC +15 V supply) forward biases germanium diode CR1040 and applies approximately +0.3 V across the base-to-emitter junction of Q1040. Current flowing to the output transformer develops a voltage drop across R1050 that adds to the bias developed by CR1040. As the current to the transformer increases, the voltage drop across R1050 also increases until, at around 1 A, the combined voltage drop across R1050 and CR1040 forward biases transistor Q1040. The base of Q1022 is pulled negative through R1042, and the +15 V supply for the Preregulator IC turns off (see Preregulator Control description). The power supply will try to restart itself; but, as long as the excessive-current condition persists, the current-limit circuit will keep shutting the supply down, protecting the instrument.

Rectifiers

The rectifiers convert the alternating current from the secondary windings of inverter output transformer T1060 to the various dc supply voltages required by the instrument. Rectification is done by conventional diode rectifier circuits, and filtering is done by conventional LC networks.

The +87 V unregulated supply is produced by a voltage-doubler circuit. The positive plate of C1130 at the anode of CR1132 is referenced at approximately +45 V through diode CR1131 (to the +42 V unregulated supply). As the positive half cycle from the 42 V secondary winding (actually about +45 V peak) is applied to the negative plate of C1130, the positive plate is elevated to a peak value of approximately +90 V. Diode CR1132 becomes forward biased and storage capacitor C1132 is charged to about +90 V. Following cycles replenish the charge drawn off by the loads on the +87 V supply line.

Line Signal

A sample of the ac line voltage is coupled to the Trigger circuit by transformer T1229 and provides the LINE TRIG signal to the Trigger hybrid. Transformer current is limited

to a safe value by resistors R1014 and R1015 placed in series with the primary winding leads. The transformer's output characteristics are matched to the input of the Trigger circuit hybrid by R1208 and C1208.

Line Up Signal

The circuit composed of Q1029, opto-isolator U1029, and their associated components, detects when power has been applied to the instrument and the Preregulator Control power supply is functioning properly. When the rectified line voltage reaches proper operating voltage, the voltage divider composed of R1027 and R1028 forward biases Q1029. As soon as the Preregulator Control power supply turns on, current flows through R1029, Q1029, and the opto-isolator LED. The illuminated LED saturates transistor U1029 and the LINE UP signal to the Power-Up Delay circuit (diagram 1) is pulled HI, indicating that the Preregulator Control circuit should now be functioning properly.

POWER DOWN. When instrument power is turned off, the voltage across the primary storage capacitors (C1021 and C1022) begins to fall as the capacitors discharge. As the voltage drops, the bias current through R1027 to the base of Q1029 also drops until the bias voltage across R1028 reaches a point about 2 V above the average transformer drive level at pin 2 of U1029. At this point, Q1029 turns off, and the LINE UP signal to the Power-Up Delay circuit goes LO. This LO signals the Microprocessor that it should start its power down routine.

The Line Up circuit tells the Microprocessor that the primary capacitors have started discharging while there is still a stored charge (set by R1027 and R1028) about 40% in excess of that required to keep the power supply voltages in regulation. This allows the Microprocessor to complete the power-down sequence before the supplies drop below their normal operating level. Further information about the power-down sequence is given in the Microprocessor Reset Control description.

Fan Circuit

Fan motor B10 is driven by adjustable three terminal regulator U1110. The fan's speed is determined by the voltage supplied by U1110 and varies with ambient temperature.

As the ambient temperature in the cabinet increases, the resistance of thermistor RT1110 decreases causing more current to flow in R1112. This causes the voltage at pin 2 and therefore the voltage at pin 3 of U1110 to increase, and the fan motor speed increases to provide more cooling capacity.

LOW-VOLTAGE REGULATORS

The Low-Voltage Regulators remove ac noise and ripple from the various unregulated dc supply voltages. Each regulator output is automatically current limited if the output current exceeds the requirements of a normally functioning instrument. This limiting prevents any further component damage.

+10 Volt Reference

Each of the power-supply regulators control their respective outputs by comparing their output voltages to a known reference level. In order to maintain stable supply voltages, the reference voltage must itself be highly stable. The circuit composed of U1290, U1300C and associated components establish this reference.

Resistor R1400 and capacitor C1400 form an RC filter network that smooths the unregulated +15 volt supply before it is applied to voltage-reference IC U1290. The +2.5 V output from pin 2 of U1290 is applied to the noninverting input of operational amplifier U1300C. The output of U1300C is the source of the +10 V reference level used by the various regulators. The output level is set by the voltage divider formed by R1291, R1293, and potentiometer R1292. The Volt Ref Adjust pot in the divider allows the reference level to be precisely set. Zener diode VR1292 prevents the reference from exceeding +11 volts should a failure in the reference circuitry occur.

+87 V Regulator

The +87 V Regulator is composed of Q1220, Q1221, Q1222, Q1223, U1281A, and their associated components. The circuit regulates and limits both the voltage and current of the supply output.

Initially, as power is applied, the voltage applied to pin 2 of U1281A from the voltage divider formed by R1227 and R1228 is lower than the +10 V reference level applied to pin 3. The output of U1281A is forced high, reverse biasing the base-emitter junction of Q1222 and turning it completely off. With Q1222 off, all the current through R1212 is supplied as base current to Darlington transistor pair Q1221 and Q1220, and maximum current flows in series-pass transistor Q1220. This charges up the various loads on the supply line, and the output level charges positive.

As the regulator output charges toward +87 V, the voltage divider applies a positive-going voltage to the inverting input of U1281A. When the output level reaches +87 volts, the inverting input reaches the +10 V refer-

ence at the noninverting input. The output voltage at pin 1 of U1281A will go negative and the base-emitter junction of Q1222 will be biased into the active region. As Q1222 turns on, base drive for the Darlington pair (Q1221 and pass transistor Q1220) is reduced. The output will be held at the level required (+87 V) for voltage at the two inputs of amplifier U1281A to be in balance.

Current limiting is a foldback design and is performed by Q1223 and its associated components. Under normal current demand conditions, Q1223 is off. If the regulator output current exceeds approximately 100mA (as it might if a component fails), the voltage drop across R1221 and CR1220 reaches a point that forward biases Q1223 via the bias divider formed by R1222 and R1223. As Q1223 turns on, a portion of the base-drive current to Q1221 is shunted away by Q1223. This reduces the base-drive current (and thus the output current) of series-pass transistor Q1220.

+42 V Regulator

The circuit configuration and operation of the +42 V Regulator is identical to that of the +82 V Regulator. Current limiting of the +42 V supply occurs at approximately 400 mA. Base drive to Darlington pair Q1241 and Q1240 is via R1244 and is dependent on proper operation of the +87 Volt Regulator. This dependency ensures that the relative polarities of the two supplies are never reversed (preventing semiconductor-junction damage in the associated load circuitry).

+15 V Regulator

The +15 V Regulator uses three-terminal regulator U1260 and operational amplifiers U1371A and U1371B, arranged as voltage sensors, to achieve regulation of the +15 V supply. The three-terminal regulator holds its output voltage at pin 2 at 1.25 volts more positive than the reference input level at pin 1. The voltage at the reference pin is established by current flow in either diode CR1262 or CR1263.

Resistors R1261 and R1262 at the regulator output divide the +15 V level down for comparison with the +10 V reference applied to pin 5 of operational amplifier U1371B. When the input voltage at pin 6 (supplied by the voltage divider) is lower than the +10 V reference, the output of amplifier U1371B is high and the output voltage of U1260 is allowed to rise. As the regulator output reaches +15 V, the voltage on pin 6 of U1371B approaches the level on pin 5, and the amplifier begins sinking current away from the reference pin of the three-terminal regulator via diode CR1263. This lowers the voltage on the reference pin and holds the output at +15 V.

The other voltage-sensing amplifier (U1371A) ensures that the relative polarity between the +15 V supply and the +42 V supply is maintained, preventing component damage in the load circuitry. Should the +42 V supply be pulled below +15 V (excessive loading or supply failure), the voltage at pin 3 of U1371A falls below the voltage at pin 2 and the amplifier output voltage goes low. This forward biases CR1262 and lowers the reference voltage for U1260, reducing the output voltage.

Current limiting for the +15 V supply is provided by the internal circuitry of the three-terminal regulator.

+5 V Regulator

Regulation of the +5 V supply is provided by a circuit similar to those of the +87 V and the +42 V Regulators. As long as the relative polarity between the +15 V and the +5 V supplies is maintained, base drive to Q1281 is supplied through R1283. The current through Q1281 provides base drive for series-pass transistor Q1280.

When voltage-sense amplifier U1300B detects that the output voltage has reached +5 V, it begins shunting base-drive current away from Q1281 via CR1281 and holds the output voltage constant.

Current limiting for the +5 V supply is done by U1300A and associated components. Under normal current-demand conditions, the output of U1300A is high and diode CR1282 is reverse biased. However, should the current through the current-sense resistor R1281 reach approximately 2 A, the voltage developed across R1281 will raise the voltage at pin 2 of U1300A (via divider R1282 and R1286) to a level equal to that at pin 3. This causes the output of U1300A to go low, forward biasing CR1282. This sinks base drive current away from Q1281 and lowers the output current in series-pass transistor Q1280.

−15 V Regulator

Operation of the −15 V Regulator, composed of three-terminal regulator U1330, operational amplifier U1270C, and their associated components, is similar to that of the +15 V Regulator with the following major changes. The control voltage at the three-terminal regulator's reference pin (pin 1) is established by the current through series-resistors R1333 and R1334. The reference pin is clamped by CR1332 at about −5.6 V should a failure in the sensing network occur. (Clamping also prevents latchup of the operational amplifier during start-up of the power supply.) Finally, the sensing divider formed by R1331 and R1332 is referenced to the +10 V reference instead of ground to enable sensing of negative voltage.

−8 V Regulator

Operation of the −8 V Regulator is similar to that of the +87 V and +42 V Regulators. Due to the lower operating voltages of the −8V Regulator the common-base transistor present in both the +87 V and the +42 V is not required. Current limiting in the −8 V supply occurs at about 480 mA.

−5 V Regulator

Operation of the −5 Volt Regulator is similar to that of the +5 V Regulator. Current limiting in the −5 V supply occurs at about 2 A.

+5 V Inverter Feedback

Operational amplifier U1371C and associated components are configured as a frequency-compensated voltage-sensing network. The circuit monitors the +5 V digital power supply line from the rectifiers and provides feedback to the Preregulator Control IC (U1030) via opto-isolator U1040 (both on diagram 9). The feedback is used to slightly vary the voltage-sensing characteristics of the Preregulator Control circuitry. The feedback (FB) signal slightly varies the voltage to the Inverter output transformer and holds the output of the 5 V secondary windings at an optimum level. Output levels of the other secondary windings are related to the +5 V_D level and are also held at their optimum values. This technique minimizes power losses in the series-pass transistors and increases regulator reliability.

Power-Up Delay

The Power-Up Delay circuit, composed of Q1370, Q1376, U1371D, and the associated components, ensures that the various regulated power supplies have time to reach their proper operating voltages before signaling the Microprocessor that the power supplies are up.

When power is first applied, a LINE UP signal from the Preregulator Control circuit goes HI, indicating that the power switch has been closed and that ample supply voltage is available for driving the Inverter transformer. The HI is applied to the base of Q1370, but since the collector is not properly biased yet, no transistor current will flow. As the Inverter begins to run, the various voltages from the secondary rectifiers begin coming up to their proper levels. A +2.5 V reference voltage is applied to operational amplifier U1371D pin 12 and forces the output high, biasing Q1376 on.

Before any of the Low-Voltage Regulators may function properly, the +10 V reference voltage must be established as previously described. When the +15 V Regulator turns on, current flows through Q1370, and pin 13 of U1371D is pulled above the +2.5 V reference through divider R1370 and R1372. The output of U1371D goes low, turning off Q1376.

When power to the instrument is turned off, the LINE UP signal goes LO (as explained in the Line Up Signal description). The falling LINE UP signal turns Q1370 off and drives the output of U1371D high. The output level from U1371D turns on Q1376 and pulls the PWR UP signal to the Microprocessor LO. This LO initiates the power-down sequence used to shut down the instrument in an orderly fashion. The delay between the time that the PWR UP signal goes LO and when the regulated power supplies fall below their normal operating levels provides ample time for the Microprocessor to complete the power-down sequence.

Power Supply Shutdown

Phosphor damage can occur to the CRT if certain regulated power supply voltages are overloaded due to excessive current draw by their loads. U1300C and its associated circuitry monitor the +15 V and the +5 V Regulator supplies. The +87 V and the +42 V Regulator supplies are monitored via R1294 and R1295 respectively. If any of these regulated supplies exceed their limit, current is sourced to U1300D (pin 13). When this happens, the +10 V Reference begins to drop which in turn lowers all the regulated supplies. This causes the high voltage oscillator to shutdown preventing damage to the CRT. Q1290 and its associated circuitry allows the +10 V Reference to come up and stabilize before the shutdown circuitry is enabled. Jumper J208 is used to disconnect the shutdown circuitry for troubleshooting purposes.

POWER DISTRIBUTION

Schematic diagrams 11 and 12 illustrate the power distribution of the instrument. The connections to the labeled boxes (representing the hybrids and ICs) show the power connections to each device, while connections to non-power lines are shown by the component and schematic number. Power supply decoupling is done with traditional LRC networks as shown on the diagrams.

Several intermediate supply voltages are generated by devices shown on diagrams 11 and 12. An approximate +32 volt supply for the A and B Sweeps is developed by emitter-follower Q700 and its associated components. Zener diodes VR125 and VR225 develop approximate +6.2 volt supplies for the CH 1 and CH 2 Preamps respectively, and zener diode VR2805 establishes an approximate −6.8 volt supply for U2800 and U2805.

INTERCONNECTIONS

Schematic diagram 13 illustrates the circuit board interconnections of the instrument. Connector numbers and cabling types are shown.

PERFORMANCE CHECK AND FUNCTIONAL VERIFICATION PROCEDURE

INTRODUCTION

This procedure is used to verify proper operation of instrument controls and to check the instrument's performance against the requirements listed in the "Specification" (Section 1). This procedure verifies instrument function and may be used to determine need for readjustment. These checks may also be used as an acceptance test and as a preliminary troubleshooting aid.

Removing the wrap-around cabinet is not necessary to perform this procedure. All checks are made using the operator accessible front- and rear-panel controls and connectors.

Within the procedure, steps to verify proper operation of an instrument control or function that are not specified in the "Specification" section begin with the word "VERIFY". These functions ARE NOT specifications and should not be interpreted as such. Steps to check performance specifications begin with the word "CHECK".

PREPARATION

Test equipment items 1 through 25 listed in Table 4-1 are required to perform this procedure. The specific pieces of equipment required to perform the checks within each section are listed at the beginning of that section. The item numbers in parentheses next to each piece of equipment refer to the numbered equipment list of Table 4-1.

Before performing this procedure, ensure that the LINE VOLTAGE SELECTOR switch is set for the ac power source being used (see "Preparation for Use" in Section 2). Connect the instrument to be checked and the test equipment to an appropriate power source. Turn the instrument on and ensure that no error message is displayed on the CRT. If an error message is present, have the instrument repaired or calibrated by a qualified service technician before performing this procedure.

The procedure is divided into sections to permit functional and performance verifications of individual sections of the instrument without performing the entire procedure. Perform all steps within a section, both in the sequence presented and in their entirety to ensure that control settings are correct for the following step.

When performing partial procedures, the Initial Control Settings at the start of the section should be set up first; then make any changes noted at the start of the subsection to be performed. When performing the procedures in sequence, merely change those controls that have changed from the previous step.

NOTE

In order to see a channel's VOLTS/DIV setting, the channel must be selected using the VERTICAL MODE switches.

On instruments with Option 06 or 09 (CTT) installed, selecting Intensified, Alternate, or B Horizontal Mode will automatically enable the Counter/Timer/ Trigger option for precision Delay, Delta Time, and 1/Delta Time measurements. Several sections of the Performance Verification Procedure specify various delay settings for B Trigger in either the RUN AFTER DELAY, TRIGGERED AFTER DELAY, or TRIG Δ DELAY mode. Procedure steps involving delay settings that the CTT option will affect have alternate instructions listed.

Table 4-1
Test Equipment Required

Item and Description	Minimum Specification	Use	Example of Applicable Test Equipment
1. Variable Power Supply	Variable output voltage: 0 V to +16 V.	Check 50 Ω input overload switching.	TEKTRONIX PS 503A.
2. Leveled Sine-Wave Generator (Primary)	Frequency: 250 kHz to 250 MHz. Output: 0 V to 5 V. Reference frequency: 50 kHz.	Check Trigger and CTT.	TEKTRONIX SG 503.
3. Calibration Generator	Fast-rise, low aberration amplitudes: to 1 V. Rise time: 1 ns or less. Repetition rate: 1 kHz to 100 kHz. Precision amplitudes: 0.01 V to 50 V ±0.25%.	Signal source for gain and transient response.	TEKTRONIX PG 506.
4. Leveled Sine-Wave Generator (Secondary)	Frequency: 245 kHz to 500 MHz. Output: 0.5 V to 4.0 V. Reference frequency: 50 kHz.	Check bandwidth and triggering.	TEKTRONIX SG 504 with Leveling head.
5. Function Generator	Repetition rate: 60 Hz to 1 MHz. Output to 15 V p-p.	Check triggers and coupling.	TEKTRONIX FG 501A.
6. Time-Mark Generator	Markers: 2 ns to 5 s in a 1-2-5 sequence. Marker accuracy: ±0.1%. For CTT checks accuracy: ±0.00005%.	Check horizontal timing and CTT.	TEKTRONIX TG 501. CTT requires TG501 Option 01.
7. Oscilloscope with P6137 10X Standard Accessory Probe	Bandwidth: 400 MHz. General Purpose.	Check power supply ripple and output signals. Troubleshooting.	TEKTRONIX 2467BCT/2465BCT.
8. T-Connector (2 required)	Impedance: 50 Ω. Connectors: BNC.	Signal interconnection.	TEKTRONIX Part Number 103-0030-00.
9. Precision BNC Cable	Impedance: 50 Ω. Connectors: BNC. Length: 36 in.	Signal interconnection.	TEKTRONIX Part Number 012-0482-00.
10. BNC Cable (4 required)	Impedance: 50 Ω. Connectors: BNC. Length: 43 in.	Signal interconnection.	TEKTRONIX Part Number 012-0057-01.
11. Dual-Input Coupler	Connectors: BNC female-to-dual-BNC male.	Signal interconnection.	TEKTRONIX Part Number 067-0525-02.
12. Termination (2 required)	Impedance: 50 Ω. Connectors: BNC.	Signal interconnection.	TEKTRONIX Part Number 011-0049-01.
13. Adapter	Subminiature probe-tip-to-BNC.	Signal interconnection.	TEKTRONIX Part Number 013-0195-00.
14. Adapter	BNC female-to-BNC female.	Signal interconnection.	TEKTRONIX Part Number 103-0028-00.
15. Adapter	Connectors: BNC female-to-dual banana.	Signal interconnection.	TEKTRONIX Part Number 103-0090-00.

Table 4-1 (cont)

Item and Description	Minimum Specification	Use	Example of Applicable Test Equipment
16. Attenuator	Attenuation factor: 2X. Impedance: 50 Ω. Connectors: BNC.	Signal attenuation.	TEKTRONIX Part Number 011-0069-02.
17. Attenuator	Attenuation factor: 5X. Impedance: 50 Ω. Connectors: BNC.	Signal attenuation.	TEKTRONIX Part Number 011-0060-02.
18. Attenuator	Attenuation factor: 10X. Impedance: 50 Ω. Connectors: BNC.	Signal attenuation.	TEKTRONIX Part Number 011-0059-02.
19. Digital Multimeter (DMM)	DC volts range to +20 V. Accuracy: ±0.2%.	Check power supplies and CALIBRATOR.	TEKTRONIX DM 502A.
20. Low-Capacitance Alignment Tool	Shaft length: 2 in.	Adjust variable resistors and capacitors.	TEKTRONIX Part Number 003-0675-00.
21. 1X Probe	Attenuation: 1X. Bandpass: <20 MHz.	Check power supply ripple.	TEKTRONIX P6101-01.
22. Normalizer	Input resistance: 1 MΩ. Input capacitance: 15 pf.	Check input capacitance.	TEKTRONIX Part Number 067-0537-00.
23. Tunnel Diode Pulser	Rise time: 125 ps or less.	Check transient response.	TEKTRONIX Part Number 067-0681-01.
24. Pulse Generator (2 required)	Frequency: 10 MHz. Pulse width: 50 ns. Pulse width accuracy: 5%. Positive trigger input, 1 V to 5 V into 50 Ohms. Positive trigger output, 1 V into 50 Ohms. Variable pulse duration.	CTT Checks.	TEKTRONIX PG502 Pulse Generator.
25. Adapter (2 required)	Connectors: BNC male-to-dual-binding.	CTT Checks.	TEKTRONIX Part Number 103-0035-00.
26. Adapter	BNC-to-probe-tip.	Signal inter-connection.	TEKTRONIX Part Number 013-0227-00.

VERTICAL

Equipment Required (see Table 4-1)

- Power Supply (Item 1)
- Primary Leveled Sine-Wave Generator (Item 2)
- Calibration Generator (Item 3)
- Secondary Leveled Sine-Wave Generator (Item 4)
- 10X Probe (supplied with 2465BCT/2465BCT) (Item 7)
- Precision 50 Ω BNC Cable (Item 9)
- 50 Ω BNC Cable (Item 10)
- Dual-Input Coupler (Item 11)
- 50 Ω BNC Termination (Item 12)
- Subminiature Probe Tip-to-BNC Adapter (Item 13)
- BNC Female-to-BNC Female Adapter (Item 14)
- BNC Female-to-Dual Banana Adapter (Item 15)
- 2X Attenuator (Item 16)
- 5X Attenuator (Item 17)
- 10X Attenuator (Item 18)
- 1X Probe (Item 21)
- BNC-to-probe-tip Adapter (Item 26)

Initial Control Settings.

Control settings not listed do not affect the procedure.

Set:

NOTE

Select channels to set VOLTS/DIV.

VOLTS/DIV

CH 1 and CH 2	1 V
CH 1 and CH 2 VAR	In detent
CH 3 and CH 4	0.1V

VERTICAL MODE

CH 1	On
CH 2, CH 3, CH 4, ADD, and INVERT	Off
CHOP/ALT	ALT
20 MHz BW LIMIT	Off

Input Coupling

CH 1 and CH 2	1 MΩ GND

Horizontal

A SEC/DIV	10 ms (knob in)
SEC/DIV VAR	In detent
X10 MAG	Off
TRACE SEP	Fully CW

Delta

Δt and ΔV	Off (press and release until associated readout is off)
TRACKING	Off

Trigger

HOLDOFF	Fully CCW
LEVEL	Midrange
SLOPE	+ (plus)
A/B TRIG SELECT	A
MODE	AUTO LVL
SOURCE	VERT
COUPLING	DC

1. Verify CH 1 and CH 2, 50 Ω OVERLOAD protection.

a. Connect the Power Supply to the CH 1 OR X input connector via a 50 Ω BNC cable and a BNC female-to-dual banana adapter.

b. Using the CH 1 VERTICAL POSITION control, position the trace on the bottom horizontal graticule line.

c. Change CH 1 Input Coupling to 1 MΩ DC.

d. Turn the Power Supply on.

e. Adjust the Power Supply output level until the CH 1 trace rises to 1 division above the center graticule line (+5 V).

f. Change CH 1 Input Coupling to 50 Ω DC.

g. VERIFY—For a period of one minute, the readout display does not indicate any overload condition (50 Ω OVERLOAD).

h. Change the CH 1 VOLTS/DIV control to 5 V and the CH 1 Input Coupling to 1 MΩ DC.

i. Increase the Power Supply output level until the CH 1 trace rises to the center graticule line (+20 V).

CAUTION

To prevent damage to the input circuitry when in 50 Ω DC, the 20 V source must not be applied to the CH 1 OR X or CH 2 input connectors for longer than 20 seconds. If the automatic OVERLOAD switching does not occur within 20 seconds, turn the Power Supply off immediately.

j. Set the CH 1 Input Coupling to 50 Ω DC.

k. VERIFY—Within 20 seconds after CH 1 input coupling is set to 50 Ω DC, the readout display indicates "50 Ω OVERLOAD", the CH 1 Input Coupling changes to 1 MΩ GND automatically, and the trace returns to the bottom horizontal graticule line.

l. Turn the Power Supply Off.

m. Disconnect the Power Supply from CH 1 input.

n. Clear the OVERLOAD condition by pressing the upper CH 1 Input Coupling button.

o. VERIFY—The CH 1, 1 MΩ DC indicator is lit and the readout display no longer indicates "50 Ω OVERLOAD".

p. Set the VERTICAL MODE buttons to display CH 2 and repeat parts a through o to verify 50 Ω OVERLOAD protection for CH 2.

2. Check CH 1 and CH 2 Low-Frequency AC Coupling.

a. Set:

NOTE

Select channels to set VOLTS/DIV.

CH 1, CH 2 VOLTS/DIV	100 mV
CH 1 VERTICAL MODE	On
CH 2 VERTICAL MODE	Off
A SEC/DIV	10 ms (knob in)
CH 1 and CH 2 Input Coupling	1 MΩ GND

b. Connect the CALIBRATOR output signal to the CH 1 OR X input connector using a 1X probe.

c. Position the ground-reference trace 2 divisions below the center horizontal graticule line.

d. Set the CH 1 Input Coupling to 1 MΩ DC.

e. CHECK—Displayed signal is vertically centered and has an amplitude of 3.88 to 4.12 divisions.

f. Set the CH 1 Input Coupling to the upper 1 MΩ GND position.

g. Using the CH 1 POSITION control, align the trace with the center horizontal graticule line.

h. Set the CH 1 Input Coupling to 1 MΩ AC.

i. CHECK—Displayed signal is a tilted square wave, 4.36 to 5.37 divisions in amplitude, vertically centered on the graticule.

j. Move the probe to the CH 2 input connector.

k. Set the VERTICAL MODE buttons to deselect CH 1 and display CH 2.

NOTE

Instruments with TV OPTION 05 have a TV CLAMP feature that is enabled by pushing the upper CH 2 INPUT COUPLING button while in AC COUPLING. The letters "TVC" appear in the top right readout when this mode is selected. Push the lower CH 2 INPUT COUPLING button to return to normal AC coupling.

l. Repeat parts c through i for CH 2.

m. Disconnect the test setup.

3. Check CRT Writing Rate of 2467B ONLY.

a. Set:

CH 1 VOLTS/DIV	50 mV
CH 1 VERTICAL MODE	On
CH 2 VERTICAL MODE	Off
A SEC/DIV	10 ms
DLY	0.0000 ms
B SEC/DIV	20 ns(knob in)
CH 1 Input Coupling	50 Ω DC
B TRIGGER MODE	RUN AFT DLY
A TRIGGER MODE	AUTO LVL
X10 MAG	ON
INTENSITY	CW (full)
READOUT INTEN	OFF (centered)

b. Connect the output of the Primary Leveled Sine-Wave Generator to the CH 1 OR X input connector via a 50 Ω BNC cable.

c. Set the generator for an 8 division display at 158 MHz.

d. Press INIT@50%.

e. VERIFY—All parts of the flashing sine waves are visible. Typical working environments illuminate the CRT faceplate with about 20 foot-candles.

f. Disconnect the test setup.

4. Check CH 1 and CH 2 VOLTS/DIV, CH 2 INVERT, ΔV and TRIGGER LEVEL Readout Accuracies, Variable VOLTS/DIV, Vertical Linearity, and ADD.

a. Set:

CH 1 Input Coupling	1 MΩ DC
CH 2 Input Coupling	1 MΩ DC
CH 1 VOLTS/DIV	2 mV
CH 2 VOLTS/DIV	2 mV
BW LIMIT	On
CH 1	On
CH 2	Off
ΔV	On (press and release for a ΔV readout)
A SEC/DIV	1 ms (knob in)
TRIGGER MODE	AUTO

NOTE

Select channels to set VOLTS/DIV.

NOTE

The instrument must have had at least 20 minutes warmup prior to performing the following steps.

b. Momentarily press and hold both the CH 1 and CH 2 upper Input Coupling buttons until a moving dot display replaces the normal signal. This performs a DC Balance of CH 1 and CH 2 and the readout indicates "DC BALANCE IN PROGRESS".

c. When the signal and readout displays automatically return to normal, set the CH 1 and CH 2 Input Coupling to 1 MΩ DC.

d. Connect the Calibration Generator to the CH 1 OR X input connector via a 50 Ω BNC cable. Do not use a termination.

e. CHECK—CH 1 and CH 2 VOLTS/DIV, ΔV, and TRIGGER LEVEL readout accuracies as follows:

1. Set VOLTS/DIV control to the first position listed in Table 4-2.

2. Set the Calibration Generator STD AMPLITUDE output level to the corresponding Standard Amplitude Input Level in Table 4-2.

NOTE

To properly verify TRIGGER LEVEL Readout Accuracy, the Calibration Generator's STD AMPLITUDE output must have rising and falling transition times (10% to 90%) > 20 ns. No overshoot should appear on the waveform.

3. Verify that the generator output meets the requirements noted above.

4. Use the VERTICAL POSITION control to set the bottom of the signal 2 divisions below graticule center.

5. Rotate the Δ REF OR DLY POS control to align the reference cursor with the bottom of the waveform.

6. Rotate the Δ control to align the delta cursor with the top of the signal display.

7. CHECK—Vertical Deflection Accuracy (measured against the graticule) and ΔV Readout Accuracy are within the limits listed in Table 4-2.

8. Set the TRIGGER LEVEL control at the most positive voltage that produces a barely triggered, jittering display for each position (+ and −) of SLOPE.

9. CHECK—The A Trigger Level readings are within the limits given in the +Peak column of Table 4-2.

10. Set the TRIGGER LEVEL control at the most negative voltage that produces a barely triggered, jittering display for each position (+ and −) of SLOPE.

11. CHECK—The A Trigger Level readings are within the limits given in the −Peak column of Table 4-2.

Table 4-2
Accuracy Limits
CH 1, CH 2 INVERT, and Delta Volts Readouts

VOLTS/DIV Switch Setting CH 1 and CH 2	Standard Amplitude Input Level	Vertical Deflection Accuracy (±2% in divisions)	Delta Volts Readout Accuracy (limits) 1.25% +0.03 div	Limits of Trigger LEVEL Readout			
				DC Coupling		NOISE REJ Coupling	
				+Peak	−Peak	+Peak	−Peak
2 mV	10 mV	4.90 to 5.10	9.81 mV to 10.20 mV	8.0 mV to 12.0 mV	+1.7 mV to −1.7 mV		
5 mV	20 mV	3.92 to 4.08	19.6 mV to 20.4 mV	16.8 mV to 23.2 mV	+2.6 mV to −2.6 mV		
10 mV	50 mV	4.90 to 5.10	49.0 mV to 50.9 mV	44 mV to 56 mV	+4.5 mV to −4.5 mV		
20 mV	0.1 V	4.90 to 5.10	98.1 mV to 102.0 mV	89 mV to 111 mV	+8.0 mV to −8.0 mV		
50 mV	0.2 V	3.92 to 4.08	196 mV to 204 mV	178 mV to 222 mV	+16 mV to −16 mV	148 mV to 252 mV	+46 mV to −46 mV
100 mV	0.5 V	4.90 to 5.10	490 mV to 509 mV	0.450 V to 0.550 V	+0.035 V −0.035 V		
200 mV	1.0 V	4.90 to 5.10	0.981 V to 1.020 V	0.90 V to 1.10 V	+0.07 V to −0.07 V		
500 mV	2.0 V	3.92 to 4.08	1.96 V to 2.04 V	1.78 V 2.22 V	0.16 V to −0.16 V		
1.0 V	5.0 V	4.90 to 5.10	4.90 V to 5.09 V	4.50 V to 5.50 V	+0.35 V to −0.35 V		
2.0 V	10.0 V	4.90 to 5.10	9.81 V to 10.2 V	9.0 V to 11.0 V	+0.7 V to −0.7 V		
5.0 V	20.0 V	3.92 to 4.08	19.6 V to 20.4 V	17.8 V to 22.2 V	+1.6 V to −1.6 V		

12. Set the TRIGGER LEVEL for a stable display.

13. Pull the SEC/DIV knob out.

14 Set:

B TRIGGER MODE	TRIG AFT DLY
SOURCE	VERT
COUPLING	DC
SLOPE	+

NOTE

On CTT instruments, rotate the Δ REF OR DLY POS control for the specified delay. As the control is rotated, the readout delay value will be followed by the word "SET". This value shows the approximate delay. A few seconds after control movement has stopped, the word "SET" will disappear and the readout delay value as measured by the CTT will appear. This is normal operation and not cause for concern.

15. Adjust Δ REF OR DLY POS control for a delay reading of 0.000 ms.

16. Set the TRIGGER LEVEL control to the most positive voltage that produces an intensified point on the waveform display for each position (+ and −) of SLOPE.

17. CHECK—The B Trigger Level readings are within the limits given in the +Peak column of Table 4-2.

18. Set the TRIGGER LEVEL control to the most negative voltage that produces an intensified point on the waveform display for each position (+ and −) of SLOPE.

19. CHECK—The B Trigger Level readings are within the limits given in the −Peak column of Table 4-2.

NOTE

On CTT instruments, repeat sections 16-19 for TRIG Δ DLY trigger mode using the +Peak and −Peak columns of Table 4-2.

20. Push the SEC/DIV knob in.

21. Change the VOLTS/DIV to the next position listed in Table 4-2.

22. Set the Calibration Generator to the corresponding signal amplitude setting.

23. Press and release the ΔV pushbutton to obtain the ΔV readout display.

24. Repeat subparts 4 through 23 of part e for each VOLTS/DIV setting listed in Table 4-2.

25. Set the TRIGGER COUPLING to NOISE REJ.

26. Set the CH 1 VOLTS/DIV to 50 mV.

27. Set the Calibration Generator STD AMPLITUDE output level to 0.2 V.

28. CHECK—Trigger Level Readout is within the limits given in Table 4-2 for NOISE REJ Coupling.

f. Return the TRIGGER COUPLING to DC.

g. Set the CH 1 VOLTS/DIV and the Calibration Generator output level to produce a vertical signal display 5 divisions in amplitude.

h. CHECK—Display amplitude reduces to 2 divisions or less when the VOLTS/DIV VAR control (of the channel under test) is rotated fully CCW. Return the VOLTS/DIV VAR control to its maximum CW (detent) position.

i. Set the Calibration Generator output level and VERTICAL POSITION controls for a 2-division display vertically centered on the graticule. Use the CH 1 VAR control if necessary to obtain the correct display amplitude.

j. Set the VERTICAL POSITION control to align the top edge of the display with the top graticule line.

k. CHECK—Signal display amplitude is 1.9 to 2.1 divisions.

l. Set the VERTICAL POSITION control to align the bottom edge of the signal display with the bottom graticule line.

m. CHECK—Signal display amplitude is 1.9 to 2.1 divisions.

n. Set:

CH 1 and CH 2
Input Coupling 50 Ω DC

o. Connect the Calibration Generator to the CH 1 OR X input connector via a 50 Ω BNC cable. Do not use a termination.

p. Check CH 1 and CH 2 VOLTS/DIV 50 Ω Coupling accuracy as follows:

1. Set VOLTS/DIV control to the first position listed in Table 4-3.

2. Set the Calibration Generator STD AMPLITUDE output level to the corresponding Standard Amplitude Input Level in Table 4-3.

3. Use the VERTICAL POSITION control to set the bottom of the signal 2 divisions below graticule center.

4. CHECK—Vertical Deflection Accuracy (measured against the graticule) is within the limits listed in Table 4-3.

5. Change the VOLTS/DIV to the next position listed in Table 4-3.

6. Set the Calibration Generator to the corresponding signal amplitude setting.

7. Repeat subparts 3 through 6 of part p for each VOLTS/DIV setting listed in Table 4-3.

Table 4-3
Accuracy Limits
CH 1 and CH 2 VOLTS/DIV 50 Ω Coupling

VOLTS/DIV Setting CH 1 and CH 2	Standard Amplitude Input Level	Vertical Deflection Accuracy (±3% in divisions)
2 mV	20 mV	4.85 to 5.15
5 mV	50 mV	4.85 to 5.15
10 mV	0.1 V	4.85 to 5.15
20 mV	0.2 V	4.85 to 5.15
50 mV	0.5 V	4.85 to 5.15
100 mV	1.0 V	4.85 to 5.15
200 mV	2.0 V	4.85 to 5.15
500 mV	5.0 V	4.85 to 5.15
1.0 V	10.0 V	4.85 to 5.15
2.0 V[a]		
5.0 V[a]		

[a]Not checked. Attempting to check would exceed Maximum Input Voltage.

8. Set CH 1 and CH 2 Input Coupling to 1 MΩ DC.

q. Move the test signal to CH 2 and set the VERTICAL MODE controls to display CH 2.

r. Return the CH 1 VOLTS/DIV VAR control to the calibrated detent position.

s. Repeat parts e through p for CH 2.

t. Return the CH 2 VOLTS/DIV VAR control to the calibrated detent position.

u. Rotate the Δ REF OR DLY POS control CCW until the cursor stops moving.

v. CHECK—Cursor is aligned with the bottom graticule line within ±0.2 division.

w. Rotate the Δ control CW until the cursor stops moving.

x. CHECK—Cursor is aligned with the top graticule line within ±0.2 division. Push ΔV to turn off cursors.

y. Turn the INVERT function on, and obtain a 5-division signal as explained in part g.

z. VERIFY—A down-arrow symbol appears to the left of the CH 2 VOLTS/DIV readout.

aa. CHECK—Display amplitude is between 4.9 divisions and 5.1 divisions in amplitude (5 divisions ±2%). Turn the INVERT function off when finished.

bb. Connect a 5 V standard-amplitude signal from the Calibration Generator to the CH 1 OR X and CH 2 input connectors via a 50 Ω BNC cable and a Dual-Input Coupler.

cc. Set:

VOLTS/DIV

CH 1 and CH 2	2 V

VERTICAL MODE

CH 1 and CH 2	Off
ADD	On
VAR	In Detent

dd. CHECK—Vertical deflection amplitude is 4.9 to 5.1 divisions.

ee. VERIFY—A + (plus) symbol appears to the left of the CH 2 VOLTS/DIV readout.

ff. CHECK—Signal amplitude reduces to 0.2 division or less when CH 2 INVERT is on.

gg. Set:

VERTICAL MODE

CH 3	On
CH 1, CH 2, CH 4	
ADD, and INVERT	Off

hh. Move the Dual-Input Coupler to the CH 3 and CH 4 input connectors.

ii. CHECK—VOLTS/DIV and TRIGGER LEVEL Readout accuracies for both setting-input level combinations listed in Table 4-4 as in subparts 4 through 23 of part e.

jj. Set the Calibration Generator output level and VERTICAL POSITION controls for a 2-division display vertically centered on the graticule.

kk. Set the VERTICAL POSITION control to align the top edge of the display with the top graticule line.

ll. CHECK—Signal display amplitude is 1.9 to 2.1 divisions.

mm. Set the VERTICAL POSITION control to align the bottom edge of the signal display with the bottom graticule line.

nn. CHECK—Signal display amplitude is 1.9 to 2.1 divisions.

oo. Set the VERTICAL MODE buttons to disable CH 3 and display CH 4.

pp. Repeat parts jj through oo for CH 4.

qq. Disconnect the test setup.

5. Check Channel 2 Delay.

a. Set:

CH 1, 2	
VERTICAL MODE	On
CH 3 and CH 4	Off
20 MHz BW LIMIT	Off
CH 1 and CH 2	
Input Coupling	50 Ω DC
CH 1 and CH 2	
VOLTS/DIV	10 mV
A SEC/DIV	1 μs (knob in)
TRIGGER SOURCE	CH 1

Table 4-4
CH 3 and CH 4 Accuracy Limits

VOLTS/DIV Switch Setting CH 3 and CH 4	Standard Amplitude Signal Input Level	Vertical Deflection Accuracy (±10% in divisions)	Trigger LEVEL Readout When Barely Triggered at the Indicated Peak	
			+Peak	−Peak
0.1 V	0.5 V	4.50 to 5.50	0.455 V to 0.545 V	±0.03 V
0.5 V	2.0 V	3.60 to 4.40	1.82 V to 2.18 V	±0.12 V

b. Connect a 100 kHz, fast-rise, positive-going signal from the Calibration Generator to the CH 1 OR X and the CH 2 input connectors via a 50 Ω BNC cable, a 5X attenuator and a Dual-Input Coupler.

c. Set the output level of the Calibration Generator for an approximate 5-division, vertically-centered display for both channels.

d. Use either the CH 1 or CH 2 VAR control to match signal amplitude between both channels.

e. Set:

A SEC/DIV	5 ns (knob in)
X10 MAG	On

f. Use the Horizontal POSITION control to move the rising edges of the CH 1 and CH 2 displays to graticule center.

g. Pull the SEC/DIV knob out to activate the CH 2 DLY feature.

NOTE

If the readout displays "CH 2 DLY DISABLED" instead of "CH 2 DLY-TURN Δ" the delay matching feature has been disabled and the remainder of this subsection cannot be performed. In this case, proceed to subsection 6 below.

h. CHECK—Δ control will position the CH 2 display one division or more (500 ps) to either side of the CH 1 display.

i. Superimpose the rising edges of the pulses using the Δ control.

j. Turn X10 MAG off and push in the SEC/DIV knob.

k. Disconnect the test setup.

6. Check Vertical Bandwidth—All Channels.

a. Set:

A SEC/DIV	50 μs (knob in)
TRIGGER SOURCE	VERT

NOTE

Select channels to set VOLTS/DIV.

CH 1, CH 2 VOLTS/DIV	20 mV
CH 3, CH 4 VOLTS/DIV	0.1 V
CH 1 and CH 2 VAR	Calibrated (in detent)
CH 1 VERTICAL MODE	On
CH 2, CH 3, CH 4 VERTICAL MODE	Off
CH 1 and CH 2 Input Coupling	50 Ω DC

b. Connect the output of the Secondary Leveled Sine-Wave Generator to the CH 1 OR X input connector via a precision 50 Ω BNC cable and any combination of the 10X, 5X, or 2X Attenuators needed to reduce the signal amplitude to the level called out in the next step.

c. Set the generator output level for a 6-division display at the reference frequency, then change the generator output to 350 MHz.

d. CHECK—Signal display amplitude is 4.25 divisions or greater while sweeping the generator frequency from 350 MHz to 420 MHz.

e. Set the VOLTS/DIV to 0.5 V and repeat parts c and d.

f. Set the VOLTS/DIV to 1 V and the generator output level for a 4-division display at the reference frequency, then change the generator frequency to 350 MHz.

g. CHECK—Signal display amplitude is 2.82 divisions or greater while sweeping the generator frequency from 350 MHz to 420 MHz.

h. Move the signal to CH 2 input connector and set the VERTICAL MODE to disable CH 1 and display CH 2.

i. CHECK—Repeat parts c through g for CH 2.

j. Set the VERTICAL MODE to display CH 3 only.

k. Attach the standard-accessory 10X probe (supplied with the instrument) to the CH 3 input connector and the probe tip to the CALIBRATOR terminal.

l. Set the SEC/DIV (knob in) to 1 ms.

m. Adjust probe compensation for the best flat top on the square-wave signal display.

n. Disconnect the probe tip from the CALIBRATOR terminal. Remove the grabber tip from the probe, unscrew and remove the plastic barrel, and connect the probe to the output of the Secondary Sine-Wave Generator (with the leveling head) via a BNC-to-probe-tip adapter.

o. Set the SEC/DIV to 50 μs (knob in).

p. Set the generator output for a 4-division display at the reference frequency, then change the generator frequency to 350 MHz.

q. CHECK—Signal display amplitude is 2.82 divisions or greater while sweeping the generator frequency from 350 MHz to 420 MHz.

r. Move the signal to CH 4 and set the VERTICAL MODE to display CH 4 only.

s. CHECK—Repeat parts k through q for CH 4.

t. Disconnect the test setup.

7. Check Common Mode Rejection Ratio (CMRR).

a. Set:

NOTE

Select channels to set VOLTS/DIV.

CH 1, CH 2 VOLTS/DIV	10 mV
CH 1 and CH 2 VAR	In detent
CH 1, ADD, and INVERT	On
CH 2, CH 3, and CH 4	Off
CH 1 and CH 2	
Input Coupling	50 Ω DC
A SEC/DIV	50 μs (knob in)
TRIGGER MODE	AUTO LVL
TRIGGER SOURCE	CH 1

b. Connect a reference frequency signal from the Primary Leveled Sine-Wave Generator to the CH 1 OR X and CH 2 input connectors via a 50 Ω BNC cable, a 5X attenuator, and a Dual-Input Coupler.

c. Set the generator output level for an 8-division display of the reference signal on CH 1.

d. Adjust either the CH 1 VAR control or the CH 2 VAR control for a minimum ADD display amplitude while leaving the other control in the calibrated detent (whichever provides the best CMRR).

e. Set the generator frequency to 50 MHz.

f. Set the A SEC/DIV to 20 ns.

g. CHECK—ADD display amplitude is 0.4 division or less (discount trace width).

h. Set ADD and INVERT Off and rotate the CH 1 and CH 2 VAR controls CW to their calibrated detent positions.

i. Disconnect the test setup.

8. Check Channel Isolation.

a. Set:

CH 1, 2, 3 and 4	
VERTICAL MODE	On
CHOP/ALT	ALT
CH 1 and CH 2	
Input Coupling	50 Ω DC
CH 1, CH 2	
VOLTS/DIV	0.1 V
CH 3, CH 4	
VOLTS/DIV	0.1 V
TRIGGER SOURCE	CH 1
A SEC/DIV	20 ns (knob in)

b. Connect the Primary Leveled Sine-Wave Generator to the CH 1 OR X input connector via a 50 Ω BNC cable.

c. Set the generator frequency to 100 MHz and adjust the output level for an 8-division display.

d. CHECK—Amplitude of each trace other than CH 1 is 0.08 division or less (discount trace width).

e. Move the signal to the CH 2 input connector and change the TRIGGER SOURCE to CH 2.

f. CHECK—Amplitude of each trace other than CH 2 is 0.08 division or less (discount trace width).

g. Add a 50 Ω BNC termination to the BNC cable and move the signal to CH 3.

h. Set the TRIGGER SOURCE to CH 3 and adjust the generator output for a signal display amplitude of 8 divisions.

i. CHECK—Amplitude of each trace other than CH 3 is 0.16 division or less (discount trace width).

j. Move the signal to CH 4 input connector and set TRIGGER SOURCE to CH 4.

k. CHECK—Amplitude of each trace other than CH 4 is 0.16 division or less (discount trace width).

l. Replace the Primary Leveled Sine-Wave Generator with the Secondary Leveled Sine-Wave Generator (with the leveling head) and connect the generator to the CH 1 OR X input connector.

m. Set the TRIGGER SOURCE to CH 1.

n. Set the generator output frequency to 400 MHz and the output level for an 8-division display.

o. CHECK—Amplitude of each trace other than CH 1 is 0.16 division or less (discount trace width).

p. Move the signal to the CH 2 input connector and set the TRIGGER SOURCE to CH 2.

q. CHECK—Amplitude of each trace other than CH 2 is 0.16 division or less (discount trace width).

r. Disconnect the test setup.

9. Set CH 1 and CH 2 DC Balance.

NOTE

For an accurate DC Balance setting, the instrument MUST be allowed to warm up for 20 minutes before performing the following steps.

a. Press both the CH 1 and CH 2 upper Input Coupling buttons for approximately 1 second, then release them.

b. VERIFY—DC BALANCE IN PROGRESS in top line of readout. A flashing dot is also displayed. The display returns to normal in approximately 15 seconds.

c. VERIFY—There is less than 0.2 division + 0.5 mV vertical trace shift between adjacent settings of the CH 1 and CH 2 VOLTS/DIV as they are rotated through each of their positions.

d. VERIFY—There is less than 0.2 division vertical trace shift between the CH 3 and CH 4 VOLTS/DIV settings.

e. VERIFY—There is less than 1.0 division vertical trace shift as the CH 1 and CH 2 VOLTS/DIV VAR controls are rotated fully CCW.

f. VERIFY—There is less than 0.5 division vertical trace shift when the INVERT button is pressed.

g. Return the VERTICAL VAR controls to their detent positions and turn the CH 2 INVERT function off.

10. Check CH 2 SIGNAL OUT and Cascaded Operation.

a. Set:

CH 1 VERTICAL MODE	On
CH 2, CH 3, CH 4 VERTICAL MODE	Off
20 MHz BW LIMIT	On

NOTE

Temporarily select CH 2 to set CH 2 VOLTS/DIV.

CH 1, CH 2 VOLTS/DIV	2 mV
CH 1 and CH 2 Input Coupling	1 MΩ DC
A SEC/DIV	200 μs (knob in)
TRIGGER MODE	AUTO LVL
SOURCE	VERT
COUPLING	HF REJ

b. Connect a 1 kHz, 1 mV standard-amplitude signal from the Calibration Generator to the CH 2 input connector via a 50-Ω BNC cable.

c. Connect the CH 2 signal from the rear-panel CH 2 SIGNAL OUT connector to the CH 1 OR X input connector via a precision 50 Ω BNC cable.

d. CHECK—Display amplitude is 4.5 to 5.5 divisions (discount trace width).

e. Set CH 2 Input Coupling to GND and align the trace with the center graticule line.

f. CHECK—Trace noise is 1.2 divisions peak-to-peak or less.

g. Set CH 1 Input Coupling to GND and align the trace with the center graticule line.

h. Return CH 1 Input Coupling to 1 MΩ DC.

i. Set the CH 1 VOLTS/DIV to 10 mV.

j. CHECK—The baseline of the display is within 2 divisions of the ground reference set above (discount trace width).

11. Check BW Limit Operation.

a. Set:

CH 1 VERTICAL MODE	Off
CH 2 VERTICAL MODE	On
BW LIMIT	On
A SEC/DIV	50 μs (knob in)
CH 2 VOLTS/DIV	10 mV

b. Connect the Primary Leveled Sine-Wave Generator output to the CH 2 input connector via a precision 50 Ω BNC cable.

c. Set the generator frequency to 50 kHz and adjust the output level for a 6-division display on the CRT.

d. Gradually increase the generator output frequency until the display amplitude decreases to 4.24 divisions.

e. CHECK—Generator frequency is between 13 MHz to 24 MHz.

f. Turn BW LIMIT off.

g. Disconnect the test setup.

TRIGGERING

Equipment Required (see Table 4-1)

Primary Leveled Sine-Wave Generator (Item 2)	50 Ω BNC Cable (4 required) (Item 10)
Secondary Leveled Sine-Wave Generator (Item 4)	Dual-Input Coupler (Item 11)
Function Generator (Item 5)	50 Ω BNC Termination (2 required) (Item 12)
10X Probe (supplied with 2465BCT/2467BCT) (Item 7)	Subminitiare Probe Tip-to-BNC Adapter (Item 13)
T-Connector (2 required) (Item 8)	10X Attenuator (Item 18)
Precision 50 Ω BNC Cable (Item 9)	Adapter (Item 25) (2 Required)

Initial Control Settings.

Control settings not listed do not affect the procedure.

a. Set:

NOTE

Select channels to set VOLTS/DIV.

VOLTS/DIV

CH 1	100 mV
CH 2	500 mV
CH 1 and CH 2 VAR	In detent
CH 3 and CH 4	0.5 V

VERTICAL MODE

CH 1	On
CH 2, CH 3, CH 4, ADD and INVERT	Off
CHOP/ALT	ALT
20 MHz BW LIMIT	Off

Input Coupling

CH 1 and CH 2	1 MΩ DC

Horizontal

A SEC/DIV	2 μs (knob in)
SEC/DIV VAR	In detent
X10 MAG	Off
TRACE SEP	Fully CW

Delta

Δt and ΔV	Off (press and release until associated readout is off)
TRACKING	Off

Trigger

HOLDOFF	B ENDS A (fully CW)
LEVEL	Midrange
SLOPE	+ (plus)
MODE	AUTO LVL
SOURCE	VERT
COUPLING	DC

1. Check A and B Triggers.

NOTE

The Trigger Level Readout Accuracies are checked in the Vertical Performance Checks.

a. Refer to Table 4-5 to determine what the A Trigger requirements are and at what frequencies various checks are made.

b. Using a 50 Ω BNC cable, connect one of the following test generators to the CH 1 input connector. Select the generator that produces the proper frequency range for the conditions being tested as called out in Tables 4-5 and 4-6. When using the leveled sine-wave generators (items 2 and 3 below), the output must be terminated into 50Ω (either the 50 Ω input coupling or a 50 Ω termination may be used).

1. Function Generator (60 Hz, 30 kHz and 80 kHz)

2. Primary Leveled Sine-Wave Generator (50 MHz)

3. Secondary Leveled Sine-Wave Generator (500 MHz)

NOTE

To obtain signal amplitudes less than 1 division, first set the signal for either 4, 5, or 10 times the specified amplitude, then reduce the amplitude by a factor of 4, 5, or 10 by increasing the VOLTS/DIV settings as necessary.

c. For each combination listed in the table, set the generator Test Frequency and the oscilloscope TRIGGER COUPLING as indicated, performing the following steps to verify the Triggering levels in each setup.

d. Set the VOLTS/DIV and the generator output level to obtain the test signal amplitude indicated for the particular combination being tested. When checking channel 1 and channel 2 500 MHz triggering, also adjust the VOLTS/DIV VAR for the correct input level.

e. Set the A SEC/DIV and the X10 MAG to obtain a well-defined display of the test signal.

NOTE

Normally, unless trigger sensitivity is very close to the specified limits, it is sufficient to check each of the indicated frequency-coupling combinations listed in the table in Channel 1 only; checks for Channels 2, 3 and 4 need only be done in DC COUPLING (to verify signal path).

f. CHECK—For a stable triggered display (unless otherwise indicated) for each of the Test Frequency-TRIGGER COUPLING combinations listed in Table 4-5. When testing the 300 MHz triggering, check that trigger jitter is < 100 ps (0.2 division at 5 ns/div with X10 MAG), with 5 divisions of signal and TRIGGER LEVEL adjusted for minimum jitter.

g. Press the ADD button to select the function and press the CH 1 button to turn off the CH 1 display.

h. Repeat the DC TRIGGER COUPLING tests of Table 4-5 while in the ADD mode, adding 0.5 DIV to the 300 and 500 MHz amplitudes.

Table 4-5
CH 1 or CH 2 Triggering Conditions

Test Frequency	Minimum Vertical Display Levels at Which Triggering Should Occur				
	TRIGGER COUPLING				
	DC	NOISE REJ	HF REJ	LF REF	AC
60 Hz	[a]	[a]	[a]	No Trigger, Freeruns	0.35 Div
30 kHz	[a]	[a]	0.35 Div	[a]	[a]
80 kHz	[a]	[a]	[a]	0.35 Div	[a]
50 MHz	0.35 Div	1.2 Div	No Trigger, Freeruns at 1.2 Div	0.35 Div	0.35 Div
300 MHz	1.0 Div	3.0 Div	No Trigger, Freeruns at 3.0 Div	1.0 Div	1.0 Div
500 MHz	1.5 Div	4.5 Div	[a]	1.5 Div	1.5 Div

[a]Not necessary to check.

i. Move the signal to the CH 2 input connector and repeat step h for CH 2.

j. Press the CH 2 button to select the channel and press the ADD button to turn off the ADD display.

k. Repeat the DC TRIGGER COUPLING tests of Table 4-5 while in CH 2 mode.

l. If trigger sensitivity is close to the specified limits given in steps c through k above, test all of the frequency-coupling combinations given in Table 4-5 for CH 2.

m. Move the test signal to CH 3 and CH 4 in turn and repeat parts c through f using Table 4-6.

Table 4-6
CH 3 or CH 4 Triggering Conditions

Test Frequency	Minimum Vertical Display Levels at Which Triggering Should Occur				
	TRIGGER COUPLING				
	DC	NOISE	HF REJ	LF REF	AC
60 Hz	a	a	a	No Trigger, Freeruns	0.18 Div
30 kHz	a	a	0.25 Div	a	a
80 kHz	a	a	a	0.25 Div	a
50 MHz	0.18 Div	0.6 Div	No Trigger, Freeruns at 0.6 Div	0.18 Div	0.18 Div
300 MHz	0.5 Div	1.5 Div	No Trigger, Freeruns at 1.5 Div	0.5 Div	0.5 Div
500 MHz	0.75 Div	2.25 Div	a	0.75 Div	0.75 div

[a]Not necessary to check.

n. Set:

TRIGGER MODE	AUTO
TRIGGER LEVEL	Fully clockwise

o. Pull the SEC/DIV knob out and set the B SEC/DIV 1 setting (CW) faster than the A SEC/DIV setting, then push the SEC/DIV knob back in.

NOTE

On CTT instruments, rotate the Δ REF OR DLY POS control for the specified delay. As the control is rotated, the readout delay value will be followed by the word "SET". This value shows the approximate delay. A few seconds after control movement has stopped, the word "SET" will disappear and the readout delay value as measured by the CTT will appear. This is normal operation and not cause for concern.

p. Verify that the CRT readout displays DLY and not Δt. If Δt is displayed, press the Δt button in and release it to select the DLY function. When DLY is displayed, rotate the Δ REF OR DLY POS control CCW until the readout display indicates zero delay. (The display will indicate DLY?, which is normal.)

q. Press the A/B TRIG button to select the B TRIGGER.

r. Set B TRIGGER MODE to TRIG AFT DLY and adjust TRIGGER LEVEL for a stable signal display.

s. Repeat parts a through m for B TRIGGER, changing the SEC/DIV and X10 MAG as required to maintain a well-defined display.

t. Disconnect the test setup.

2. Check Composite Triggering.

a. Set:

CH 1, CH 2, CH 3, CH 4 VERTICAL MODE	On
ADD	Off
CHOP/ALT	ALT
CH 1 and CH 2 Input Coupling	1 MΩ DC
A/B TRIG TRIGGER	A
TRIGGER MODE	NORM
TRIGGER SOURCE	CH 1
TRIGGER COUPLING	DC
A SEC/DIV	10 μs (knob in)

b. Connect the Function Generator to the CH 1 and CH 2 inputs via a 50 Ω BNC cable and a Dual-Input Coupler.

c. Set the Function Generator for a 50 kHz, 1.35-division display for CH 1 and CH 2.

d. Connect the Primary Leveled Sine-Wave Generator to the CH 3 input connector using a 50 Ω BNC cable and a 50 Ω termination.

e. Set TRIGGER SOURCE to CH 3.

f. Set the generator output level for a 0.7-division display at the reference frequency (50 kHz).

g. Connect the Secondary Leveled Sine-Wave Generator to the CH 4 input using a BNC cable and a 50 Ω termination.

h. Set TRIGGER SOURCE to CH 4.

i. Set the generator output level for a 0.7-division display at the reference frequency.

j. Set TRIGGER SOURCE to VERT.

k. CHECK—Display will trigger as the TRIGGER LEVEL control is rotated through its range.

l. Pull the SEC/DIV knob out, rotate it to 5 μs, and push it back in.

m. Press the A/B TRIG button and set the B TRIGGER MODE to TRIG AFT DLY.

n. Set B TRIGGER SOURCE to VERT.

NOTE

On CTT Instruments, rotate the Δ REF OR DLY POS control for the specified delay. As the control is rotated, the readout delay value will be followed by the word "SET". This value shows the approximate delay. A few seconds after control movement has stopped, the word "SET" will disappear and the readout delay value as measured by the CTT will appear. This is normal operation and not cause for concern.

o. Rotate the Δ REF OR DLY POS control CCW until the delay readout indicates DLY? 0.00 μs.

p. CHECK—Display will trigger as the TRIGGER LEVEL control is rotated through its range.

q. Rotate the SEC/DIV knob back to 10 μs (knob in).

r. Disconnect the test setup.

3. Check Trigger Noise Rejection — All Channels.

a. Set:

NOTE

Select channels to set VOLTS/DIV.

CH 1 VOLTS/DIV	5 mV
CH 2 VOLTS/DIV	50 mV
CH 3, CH 4 VOLTS/DIV	0.1 V
CH 1 VERTICAL MODE	On
CH 2, CH 3, CH 4 VERTICAL MODE	Off
CH 1 and CH 2 Input Coupling	1 MΩ DC
A SEC/DIV	10 μs (knob in)
TRIGGER MODE	AUTO LVL
TRIGGER SOURCE	VERT

b. Connect the Function Generator to the CH 1 input via a 50 Ω BNC cable and a 10X attenuator.

c. Set the Function Generator output frequency and level for a 50-kHz, 4-division display.

d. Set the CH 1 VOLTS/DIV to 50 mV.

e. Set the TRIGGER COUPLING to NOISE REJ.

f. CHECK—Display will not trigger (freeruns).

g. Pull the SEC/DIV knob out, rotate it to 5 μs and push it back in.

h. Press the A/B TRIG button to select the B TRIGGER.

i. Set the TRIGGER MODE to B TRIG AFT DLY.

j. Set TRIGGER COUPLING to NOISE REJ.

k. CHECK—Display will not trigger for any setting of the LEVEL control.

l. Rotate the SEC/DIV back to 10 μs (knob in).

m. Move the input signal to CH 2, CH 3, and CH 4 in turn, selecting each channel as the display source. Repeat parts f through k for each channel.

4. Check Slope Selection and Verify Line Trigger.

a. Set:

CH 1 VERTICAL MODE	On
CH 2, CH 3, CH 4 VERTICAL MODE	Off
A SEC/DIV	2 ms (knob in)
X10 MAG	Off
TRIGGER MODE	AUTO
TRIGGER SOURCE	LINE
TRIGGER COUPLING	AC
CH 1 VOLTS/DIV	5 V
CH 1 Input Coupling	1 MΩ DC

CAUTION

In the next part, DO NOT connect the probe ground lead to the ac power source.

b. Attach the 10X probe to the CH 1 OR X input connector and connect the probe tip to the ac power source.

c. CHECK—Display can be triggered in both the + (plus) and − (minus) positions of the SLOPE switch using the TRIGGER LEVEL control and that the displayed slope agrees with the selected slope.

d. CHECK—Display phase shifts slightly as the TRIGGER COUPLING is changed from AC to DC.

e. Disconnect the test setup.

HORIZONTAL

Equipment Required (see Table 4-1)

- Primary Leveled Sine-Wave Generator (Item 2)
- Calibration Generator (Item 3)
- Time-Mark Generator (Item 6)
- T-Connector (Item 8)
- Precision 50 Ω BNC Cable (2 required) (Item 10)
- Dual Input Coupler (Item 11)
- Pulse Generator (Item 24)

Initial Control Settings.

Control settings not listed do not affect the procedure.

Set:

NOTE

Select channels to set VOLTS/DIV.

VOLTS/DIV

CH 1 and CH 2	0.5 V
CH 1 VAR	In detent
CH 3 and CH 4	0.1 V

VERTICAL MODE

CH 1	On
CH 2, CH 3, CH 4, ADD, and INVERT	Off
CHOP/ALT	ALT
20 MHz BW LIMIT	Off

Input Coupling

CH 1 and CH 2	50 Ω DC

Horizontal

A SEC/DIV	200 ns (knob in)
SEC/DIV VAR	In detent
X10 MAG	Off
TRACE SEP	Fully CW

Delta

ΔV and Δt	Off (press and release until associated readout is off)
TRACKING	Off

Trigger

HOLDOFF	B ENDS A
LEVEL	Midrange
SLOPE	+ (plus)
MODE	AUTO LVL
SOURCE	VERT
COUPLING	DC

1. Check Horizontal Display Modes (A, A INTEN, ALT, and B).

a. Use a 50 Ω BNC cable to connect 200 ns time markers from the Time-Mark Generator to the CH 1 OR X input connector.

b. Adjust the TRIGGER LEVEL control as necessary for a stable signal display.

c. Pull the SEC/DIV knob out and set the B TRIGGER MODE to RUN AFT DLY.

NOTE

On CTT instruments, rotate the Δ REF OR DLY POS control for the specified delay. As the control is rotated, the readout delay value will be followed by the word "SET". This value shows the approximate delay. A few seconds after control movement has stopped, the word "SET" will disappear and the readout delay value as measured by the CTT will appear. This is normal operation and not cause for concern.

d. Set the Δ REF OR DLY POS control for a DLY readout of approximately 1000 ns.

e. VERIFY—An intensified zone appears on the displayed signal near graticule center. The INTENSITY control may need adjustment.

f. Rotate the Δ REF OR DLY POS control to center the intensified zone on one of the time markers near graticule center.

g. Set the **B** SEC/DIV to 50 ns (knob out).

h. Rotate the TRACE SEP control CCW to separate the A and B sweep displays.

i. CHECK—The B sweep is displayed with the A sweep.

j. Push the SEC/DIV knob in.

k. CHECK—Only the B sweep is displayed.

2. Check A and B Timing, A Cursor Accuracies, and A Cursor Range.

a. Set:

A SEC/DIV	5 ns (knob in)
TRACE SEP	Fully CW
Δt	On (press and release for Δt display)

b. Select 5 ns time markers from the Time-Mark Generator and adjust the TRIGGER LEVEL control for a stable display.

c. Use the Horizontal POSITION control to align the 2nd time marker with the 2nd vertical graticule line (2nd from the left edge of the display).

NOTE

The 2 ns and the 5 ns time markers are sinusoidal. Use either the rising or falling zero-crossings as alignment points.

d. Align the Δ REF OR DLY POS cursor with the 2nd time marker and align the Δ cursor with the 10th time marker.

e. CHECK—The A Sweep timing and cursor readout accuracies are within the limits given in Tables 4-7 and 4–8.

NOTE

If the 2nd and 10th time markers are within 0.06 division of the 2nd and 10th vertical graticule lines for unmagnified sweeps and within 0.1 division for magnified sweeps, the sweep timing accuracy is conservatively within limits. When the timing accuracy is checked at each sweep speed, note any SEC/DIV setting at which the timing error exceeds the 0.06-division limit. Check these sweep speeds against the major-division time-interval limits given in Table 4-8.

NOTE

For SEC/DIV settings of 5 ns and 10 ns, the time-marker period is greater than 1 division when the sweep is magnified. At 500 ps per division (SEC/DIV setting of 5 ns with X10 MAG), input the signal through a dual input coupler to CH 1 and CH 2. Select CH 1, CH 2, and CH 2 INVERT. Set the CH 1 and CH 2 VOLTS/DIV settings for a 6 division signal. Center the waveforms. Check for 2 cycles between the 2nd and 10th vertical graticule lines (within 0.1 division) at the intersections of the waveforms. For 1 ns per division, check for 4 cycles between the 2nd and 10th vertical graticule lines (0.1 division).

f. Repeat parts c, d, and e for each A SEC/DIV-time marker combination given in Table 4-7 for both unmagnified and magnified sweeps.

Table 4-7
Settings for A and B Timing Accuracy Checks and A Cursor Accuracy Limits

SEC/ DIV Setting	Unmagnified		X10	
	Time Markers	Limits of Δt Cursor Readout	Time Markers	Limits of Δt Cursor Readout
5 ns	5 ns	39.65 ns to 40.35 ns	2 ns 4 Div/cycle	3.94 ns to 4.06 ns (2 cycles)
10 ns	10 ns	79.30 ns to 80.70 ns	2 ns 2 Div/cycle	7.89 ns to 8.11 ns (4 cycles)
20 ns	20 ns	158.60 ns to 161.40 ns	2 ns	15.78 ns to 16.22 ns
50 ns	50 ns	396.5 ns to 403.5 ns	5 ns	39.45 ns to 40.55 ns
100 ns	0.1 μs	793.0 ns to 807.0 μs	10 ns	78.90 ns to 81.10 ns
200 ns	0.2 μs	1586.0 ns to 1614.0 ns	20 ns	157.80 ns to 162.20 ns
500 ns	0.5 μs	3965 ns to 4035 ns	50 ns	394.5 ns to 405.5 ns
1 μs	1 μs	7.930 μs to 8.070 μs	0.1 μs	789.0 ns to 811.0 ns
2 μs	2 μs	15.860 μs to 16.140 μs	0.2 μs	1578.0 ns to 1622.0 ns
5 μs	5 μs	39.65 μs to 40.35 μs	0.5 μs	3945 ns to 4055 ns
10 μs	10 μs	79.30 μs to 80.70 μs	1 μs	7.890 μs to 8.110 μs
20 μs	20 μs	158.60 μs to 161.40 μs	2 μs	15.780 μs to 16.220 μs
50 μs	50 μs	396.5 μs to 403.5 μs	5 μs	39.45 μs to 40.55 μs
100 μs	100 μs	793.0 μs to 807.0 μs	10 μs	78.90 μs to 81.10 μs
200 μs	200 μs	1586.0 μs to 1614.0 μs	20 μs	157.80 μs to 162.20 μs
500 μs	500 μs	3965 μs to 4035 μs	50 μs	394.5 μs to 405.5 μs
1 ms	1 ms	7.930 ms to 8.070 ms	100 μs	789.0 μs to 811.0 μs
2 ms	2 ms	15.860 ms to 16.140 ms	200 μs	1578.0 μs to 1622.0 μs
5 ms	5 ms	39.65 ms to 40.35 ms	500 μs	3945 μs to 4055 μs
10 ms	10 ms	79.30 ms to 80.70 ms	1 ms	7.890 ms to 8.110 ms
20 ms	20 ms	158.60 ms to 161.40 ms	2 ms	15.780 ms to 16.220 ms
50 ms	50 ms	396.5 ms to 403.5 ms	5 ms	39.45 ms to 40.55 ms
A SEC/DIV ONLY	(B Sweep does not have these sweep speeds)			
100 ms	0.1 s	793.0 ms to 807.0 ms	10 ms	78.90 ms to 81.10 ms
200 ms	0.2 s	1578.0 ms to 1622.0 ms	20 ms	157.00 ms to 163.00 ms
500 ms	0.5 s	3945 ms to 4055 ms	50 ms	392.5 ms to 407.5 ms

Table 4-8
Horizontal Timing Accuracy Checked Against the Graticule

	Over Any									
	1 Div	**2 Div**	**3 Div**	**4 Div**	**5 Div**	**6 Div**	**7 Div**	**8 Div**	**9 Div**	**10 Div**
Time-marker Accuracy (X10 MAG off)	±0.07 Div	±0.07 Div	±0.08 Div	±0.09 Div	±0.10 Div	±0.10 Div	±0.11 Div	±0.12 Div	±0.12 Div	±0.13 Div
Time-marker Accuracy (X10 MAG on) (Exclude first 0.5 division of sweep rate)	±0.07 Div	±0.08 Div	±0.1 Div	±0.11 Div	±0.12 Div	±0.13 Div	±0.14 Div	±0.16 Div	±0.17 Div	±0.18 Div
As Measured Against These Time-Marker Pairs (X10 MAG off only)	1-2	1-3	1-4	1-5	1-6	1-7	1-8	1-9	1-10	1-11
	2-3	2-4	2-5	2-6	2-7	2-8	2-9	2-10	2-11	
	3-4	3-5	3-6	3-7	3-8	3-9	3-10	3-11		
	4-5	4-6	4-7	4-8	4-9	4-10	4-11			
	5-6	5-7	5-8	5-9	5-10	5-11				
	6-7	6-8	6-9	6-10	6-11					
	7-8	7-9	7-10	7-11						
	8-9	8-10	8-11							
	9-10	9-11								
	10-11									

g. Rotate the Δ REF OR DLY POS control CCW until the cursor stops moving.

h. CHECK—Δ REF OR DLY POS cursor aligns with the 1st graticule line within 0.2 division.

i. Rotate the Δ control CW until the cursor stops moving.

j. CHECK—Δ cursor aligns with the 11th graticule line within 0.2 division.

k. Set the A SEC/DIV to 10 ns.

l. Rotate the Δ REF OR DLY POS and the Δ controls to precisely superimpose the cursors near the 2nd graticule line.

m. CHECK—Δt readout indicates a difference of 0.30 ns or less.

n. Rotate the Δ REF OR DLY POS and the Δ controls to precisely superimpose the cursors near the 10th graticule line.

o. CHECK—Δt readout indicates a difference of 0.30 ns or less.

p. Set:

B SEC/DIV	5 ns (knob in)
B TRIGGER MODE	RUN AFT DLY
X10 MAG	Off
Δt	Off (DLY)
Δ REF OR DLY POS	Set for zero delay

NOTE

On CTT instruments, rotate the Δ REF OR DLY POS control for the specified delay. As the control is rotated, the readout delay value will be followed by the word "SET". This value shows the approximate delay. A few seconds after control movement has stopped, the word "SET" will disappear and the readout delay value as measured by the CTT will appear. This is normal operation and not cause for concern.

q. CHECK—The B sweep timing accuracy as in parts b through f, making sure that the A SEC/DIV is set slower than the B SEC/DIV.

3. Check Delta Time Accuracy using the Delayed Sweep.

a. Set:

A SEC/DIV	10 ns
B SEC/DIV	5 ns (knob out)
X10 MAG	On
Δt	Off (DLY readout)
TRIGGER MODE	AUTO LVL
TRIGGER SOURCE	VERT
TRIGGER COUPLING	DC
TRIGGER SLOPE	+ (plus)
TRIGGER LEVEL	As required for a stable display
B TRIG MODE	RUN AFT DLY

NOTE

Certain time marks from the TG 501 (and other Time-Mark Generators) will vary in width and may be displaced in time. This will happen in a repeatable sequence and is caused by the loading and interaction of the 2, 5, and 10 dividers. This is most noticeable with 10 ns, 20 ns, and 50 ns markers. The following procedure will use the above markers to set up the proper references but the 5 ns markers will be used to make the actual measurement. Close inspection of apparent jitter or mistrigger of the time marks will show the trigger point to be stable with the apparent jitter to be variable with unique combinations of trigger holdoff and sweep speed. This is normal behavior with this type of signal and is not an instrument defect.

It is not necessary to count the number of marks given in the tables. Switching to 10 ns, 20 ns, or 50 ns markers as required and then to 5 ns will show the proper 5 ns mark to be used.

For CTT instruments, use the following setup of the CTT while performing the Delta Time performance check.

1. Push the MEASURE button to enter MENU mode.
2. Select COUNTER ("4") from menu.
3. Select PERIOD ("2") from menu.

The CTT period readout will appear on the left side of the upper line of readout. The word "SET" will appear next to the readout delay value. This denotes the indirect measurement mode of Delta Time, simulating a non-CTT scope.

b. Set the Time-Mark Generator for 10 ns markers. Adjust the Vertical VOLTS/DIV as required for a display of 3 to 6 divisions.

c. Adjust the Δ REF OR DLY POS control for a readout display of DLY 10.64 ns.

d. Adjust the Horizontal POSITION control CW until the trace stops moving, then CCW to display the leading edge of the 2nd time marker near the graticule center. This becomes the reference point for the following procedure. Set the Time-Mark Generator to 5 ns and adjust the Vertical VOLTS/DIV and Trigger LEVEL as required.

e. Press and release the Δt button to obtain the Δt display. Push in the SEC/DIV knob for B SWP only. Rotate the Δ control for a readout display of Δt −10.64 ns. If the time marks are not superimposed, adjust the Δ control to do so.

f. CHECK—Δt readout is within the limits listed in Table 4-9 for the 1st 5 ns time marker; then check that the 3rd through 19th time markers are within the given limits as the Δ control is rotated CW to superimpose every second time marker on the reference time marker.

NOTE

Correct time marks to superimpose on the reference marker can be easily found by noting the Delta Time Readout.

g. Set:

A SEC/DIV	20 ns
B SEC/DIV	5 ns (knob out)
X10 MAG	ON
Δt	Off (DLY readout)

h. Set the Time-Mark Generator for 20 ns time markers and adjust the Δ REF OR DLY POS control for a readout display of DLY 21.25 ns.

Table 4-9
Delta Time Display Accuracy

Time-Marker Period and A SEC/DIV Switch Setting	B SEC/DIV Switch Setting	Marker Superimposed using the Δ (Delta) Control	Delta Time Readout Accuracy Limits
10 ns	500 ps[a]	1st	−9.68 ns to −10.32 ns
		3rd	−0.30 ns to 0.30 ns
		5th	9.68 ns to 10.32 ns
		7th	19.64 ns to 20.36 ns
		9th	29.62 ns to 30.38 ns
		11th	39.58 ns to 40.42 ns
		13th	49.56 ns to 50.44 ns
		15th	59.52 ns to 60.48 ns
		17th	69.50 ns to 70.50 ns
		19th	79.46 ns to 80.54 ns
20 ns	500 ps[a]	1st	−19.55 ns to −20.45 ns
		9th	19.55 ns to 20.45 ns
		37th	159.15 ns to 160.85 ns
50 ns	500 ps[a]	1st	−49.2 ns to −50.8 ns
		21st	49.2 ns to 50.8 ns
		91st	398.1 ns to 401.9 ns

[a]5 ns with X10 MAG on.

i. Position the leading edge of the 2nd time marker near graticule center using the Horizontal POSITION control. Set the Time-Mark Generator to 5 ns and adjust the Vertical VOLTS/DIV and Trigger LEVEL as required.

j. Press and release the Δt button to obtain a Δt display. Push in the SEC/DIV knob for B sweep only. Adjust the Δ control for a readout display of Δt −20.00 ns. If the time markers are not superimposed, adjust the Δ control to do so.

k. CHECK—Δt readout is within the limits listed in Table 4-9 for the first 5 ns time marker; then check that the 9th and 37th time markers are within the given limits as the Δ control is rotated CW to superimpose each time marker on the reference time marker.

l. Set:

A SEC/DIV	50 ns
B SEC/DIV	5 ns (knob out)
X10 MAG	ON
Δt	Off (DLY readout)

m. Set the Time-Mark Generator for 50 ns time markers and adjust the Δ REF OR DLY POS control for a readout display of DLY 53.2 ns.

n. Position the leading edge of the 2nd time marker near graticule center using the Horizontal POSITION control. Set the Time-Mark Generator to 5 ns and adjust the Vertical VOLTS/DIV and Trigger LEVEL as required.

o. Press and release the Δt button to obtain a Δt display. Push in the SEC/DIV knob for B sweep only. Adjust the Δ control for a readout display of Δt −50.00 ns. If the time markers are not superimposed, adjust the Δ control to do so.

p. CHECK—Δt readout is within the limits listed in Table 4-9 for the first 5 ns time marker; then check that the 21st and 91st time markers are within the given limits as the Δ control is rotated CW to superimpose each time marker on the reference time marker.

q. Set:

TRACKING/INDEP	TRACKING
A SEC/DIV	100 ns
B SEC/DIV	10 ns (knob out)
X10 MAG	On

r. Select 0.1 μs time markers from the Time-Mark Generator.

s. Adjust the Δ and Δ REF OR DLY POS controls for a Δt readout display of 800.0 ns.

t. Adjust the Horizontal POSITION control to align the leading edge of the 2nd time marker on the A sweep with the 2nd vertical graticule line.

u. Rotate the TRACE SEP control CCW to separate the traces.

v. Adjust the Δ REF OR DLY POS control to intensify the 2nd and 10th time markers (of the A sweep) and display the leading edges of the displayed B sweep time markers in the center area of the graticule.

w. VERIFY—The horizontal distance between the leading edges of the B sweep time markers is within the conservative guideline listed in Table 4-10. If this guideline is met, accuracy between each marker is ensured, and the following CHECK step need not be performed.

x. CHECK—The horizontal distance between the leading edges of the B sweep time markers is within the specified limits given in Table 4-10. The limit given is for separation between the 2nd and 10th marker; however, separation between the 2nd marker and each succeeding marker should also be checked, calculating the limits from the specification as listed at the top of the table.

NOTE

To easily maintain the A SWP and B SWP difference while testing Delta Time, use the following method:

1. Starting with the 0.5 μs test in Table 4-9 (X10 MAG off), turn TRACKING off.

2. Press and hold the TRACKING button, then push the SEC/DIV knob in. This will lock the sweeps together at that difference.

3. Pull the SEC/DIV knob out.

The fastest sweep speed at which the X100 difference is maintained is with an A SEC/DIV of 500 ns and a B SEC/DIV of 5 ns, after which only the A sweep speed will change with the SEC/DIV knob. Push TRACKING to unlock this setup.

Table 4-10
Delayed Sweep Delta Time Accuracy

		Displayed Separation of Delayed Time Markers (for 2nd and 10th markers)	
A SEC/DIV and Time Markers	**B SEC/DIV as Displayed on Readout**	**Conservative Guideline (divisions)**	**Specified Limit: (0.3% time) interval +0.1% of full scale-divisions + 200 ps**
0.1 μs	1 ns[a]	2.4	3.4
0.2 μs	2 ns[a]	2.4	3.4
0.5 μs	5 ns[a]	2.4	3.4
1 μs	10 ns[b]	2.4	3.4
2 μs	20 ns	2.4	3.4
5 μs	50 ns	2.4	3.4
10 μs	100 ns	2.4	3.4
20 μs	200 ns	2.4	3.4
50 μs	500 ns	2.4	3.4
0.1 ms	1 μs	2.4	3.4
0.2 ms	2 μs	2.4	3.4
0.5 ms	5 μs	2.4	3.4
1 ms	10 μs	2.4	3.4
2 ms	20 μs	2.4	3.4
5 ms	50 μs	2.4	3.4
10 ms	100 μs	2.4	3.4
20 ms	200 μs	2.4	3.4
50 ms	500 μs	2.4	3.4
0.1 s	1 ms	2.4	3.4
0.2 s	2 ms	6.4	7.4
0.5 s	5 ms	6.4	7.4

[a]X10 MAG On.
[b]For remainder of Table, turn X10 MAG off.

y. Repeat part w (and x if necessary) for each combination of A SEC/DIV, B SEC/DIV, and X10 MAG settings listed in Table 4-9. The Δt readout should be set to indicate eight times the A SEC/DIV setting. At the slowest sweep speeds, the B SEC/DIV knob can be pushed in (in B Sweep only) to increase the display repetition rate.

PARAMETRIC MEASUREMENTS CHECK

Initial Control Settings.

Control settings not listed do not affect the procedure.

VERTICAL MODE

CH 1	On
CH 2, 3, 4	Off

Input Coupling

CH 1	50 Ω DC

1. Check Timing Accuracy

NOTE

All Parametric timing measurements are derived from the same timing ramps as the period measurements. Verification of the period measurements provides verification of all timing measurements.

a. Connect Time Mark generator to CH 1 OR X input of the oscilloscope under test.

b. For each entry in Table 4-11:

1. Set Time Mark generator as indicated.
2. Press MEASURE.
3. Select FREQ from menu.
4. Verify resulting period measurement is within limits shown in Table 4-11.

NOTE

If the 50 ns period is out of limits shown on Table 4–11, perform step 2 (50 ns Timing Accuracy Verification) below.

c. Disconnect Time Mark generator.

2. 50 ns Timing Accuracy Verification

NOTE

Some Time Mark generators have jitter at the 50 ns setting which may produce an erroneous period reading. Use the following procedure to verify the 50 ns period measurement.

Table 4-11
Parametric Measurement Period Checks

Time Mark Setting	Minimum Period	Maximum Period	Time Mark Setting	Minimum Period	Maximum Period
2 ns	1.48 ns	2.52 ns	20 µs	19.82 µs	20.18 µs
5 ns	4.45 ns	5.55 ns	50 µs	49.55 µs	50.45 µs
10 ns	9.41 ns	10.59 ns	100 µs	99.10 µs	100.9 µs
20 ns	19.32 ns	20.68 ns	200 µs	198.2 µs	201.8 µs
50 ns	49.05 ns	50.95 ns[a]	500 µs	495.5 µs	504.5 µs
100 ns	98.6 ns	101.4 ns	1 ms	991.0 µs	1.009 ms
200 ns	197.7 ns	202.3 ns	2 ms	1.982 ms	2.018 ms
500 ns	495.0 ns	505.0 ns	5 ms	4.955 ms	5.045 ms
1 µs	990.5 ns	1.010 µs	10 ms	9.910 ms	10.09 ms
2 µs	1.981 µs	2.019 µs	20 ms	19.82 ms	20.18 ms
5 µs	4.954 µs	5.046 µs	50 ms	49.55 ms	50.45 ms[b]
10 µs	9.909 µs	10.09 µs	100 ms	99.10 ms	100.9 ms[b]

[a]If the 50 ns setting is not within the limits given, perform step 2 (50 ns Timing Accuracy Verification).
[b]For this setting, change MINFREQ to 10 Hz.

NOTE

This procedure need only be performed if the 50 ns reading from step 1 above was outside the limits listed in Table 4-11.

a. Connect Primary leveled sine-wave generator (item 2) to CH 1 OR X input of the oscilloscope under test and the test oscilloscope using a T-connector.

b. Set frequency for 20 MHz.

c. Adjust generator output amplitude for at least a 200 mV peak- peak display on the test oscilloscope.

d. Using the counter in the test oscilloscope, measure period of signal.

e. Press MEASURE then select FREQ on the oscilloscope under test.

f. Verify that the oscilloscope under test reads a period that is within 0.9% + 0.5 ns of the value measured by the counter on the test oscilloscope.

3. Verify Positive and Negative Peak Volts Measurements

a. Set CH 1 OR X input coupling to 1 MΩ.

b. Set CH 1 VOLTS/DIV to 50 mV.

c. Set A SEC/DIV to 500 μs.

d. Connect the + fast rise output of the Calibration Generator to the CH 1 OR X input via a 50-Ω BNC cable.

e. Adjust Calibration Generator amplitude for a 4 division 1 kHz display.

f. Measure VOLTS by pressing MEASURE and then selecting VOLTS.

g. CHECK—POS-PK reading is 0.0 mV ± 5 mV.

h. Connect the − fast rise output of the Calibration Generator to the CH 1 OR X input via a 50-Ω BNC cable.

i. Repeats steps e and f for − fast rise connected to CH 1.

j. CHECK—NEG-PK reading is 0.0 mV ± 5 mV.

k. Disconnect fast rise Generator.

4. Verify Average and Peak-Peak Volts Measurements

a. Connect standard-amplitude calibration Generator to CH 1 OR X input via a BNC T-Connector (item 8) and a 50-Ω cable.

b. For each entry in Table 4-12:

1. Measure VOLTS by pressing MEASURE and then selecting VOLTS.
2. Verify PK-PK reading is within limits specified.
3. Connect the BNC T-Connector via a 50-Ω cable and BNC to dual banana adapter to the Digital Multimeter (item 19).
4. Select appropriate DMM voltage range and note voltage reading.
5. Verify AVG reading is within limits specified.

NOTE

To insure accurate VOLT measurements it is necessary to disconnect the DMM input from the BNC T-Connector at the standard-amplitude Generator output PRIOR to selecting a VOLTS measurement. Re-connect meter when VOLTS measurements are completed.

c. Disconnect calibration generator from CH 1 OR X input and connect to CH 2 OR Y input.

d. Select only CH 2 for display.

e. Repeat step b for CH 2.

f. Disconnect test setup.

Table 4-12
Parametric Measurement Volts Checks

Calibration Generator Setting	Min[a] PK-PK	Max[a] PK-PK	AVG[a]
20 mV	14 mV	26 mV	Within ±(5% of DM501A reading + 5.6 mV)
50 mV	43 mV	57 mV	Within ±(5% of DM501A reading + 5.6 mV)
0.1 V	90 mV	110 mV	Within ±(5% of DM501A reading + 5.6 mV)
0.2 V	185 mV	215 mV	Within ±(5% of DM501A reading + 6.5 mV)
0.5 V	470 mV	530 mV	Within ±(5% of DM501A reading + 6.5 mV)
1 V	0.945 V	1.055 V	Within ±(5% of DM501A reading + 6.5 mV)
2 V	1.89 V	2.10 V	Within ±(5% of DM501A reading + 15 mV)
5 V	4.74 V	5.25 V	Within ±(5% of DM501A reading + 15 mV)
10 V	9.49 V	10.50 V	Within ±(5% of DM501A reading + 15 mV)
20 V	19.0 V	21.0 V	Within ±(5% of DM501A reading + 100 mV)
50 V	47.5 V	52.5 V	Within ±(5% of DM501A reading + 100 mV)

[a]Disconnect DMM prior to selecting VOLTS measurement.

COUNTER/TIMER/TRIGGER CHECKS

This section contains the portion of the Option 06 (Counter/Timer/Trigger) performance check procedure that directly affects operation of the horizontal timing modes. If your instrument does not contain this option, continue with the Horizontal checks.

Test equipment listed in Table 4-1 is required to perform this procedure. To assure accurate measurements, it is important that test equipment used for making these checks meet or exceed the specifications described in Table 4-1 for CTT checks.

Initial Control Settings.

Control settings not listed do not affect the procedure.

NOTE

Select channels to set VOLTS/DIV.

VOLTS/DIV

CH 1 and CH 2	500 mV
CH 1 and CH 2 VAR	In detent
CH 3 and CH 4	0.1 V

VERTICAL MODE

CH 1	ON
CH 2, 3, 4 and INVERT	Off
CHOP/ALT	ALT
20 MHz BW LIMIT	Off

Input Coupling

CH 1 and CH 2	50 Ω DC

Horizontal

A SEC/DIV	10 ns (knob in)
SEC/DIV VAR	In detent
X10 MAG	Off
TRACE SEP	Fully CW

Delta

Δt and ΔV	Off (press and release until associated readout is off)
TRACKING	Off

TRIGGER

HOLDOFF	Fully CCW
A and B LEVEL	INIT@50%
A and B SLOPE	+ (plus)
A MODE	AUTO LVL
B MODE	RUN AFT DLY
A and B SOURCE	VERT
A and B COUPLING	DC

CTT and WR Options

MENU Functions	OFF

1. Check Maximum Input Frequency at Minimum Sensitivity

a. Connect the leveled sinewave generator's output via a 50-Ω cable to the CH 1 input connector.

b. Set generator to produce a 150-MHz, 4-division display.

c. Press the MEASURE button to enter MENU mode.

d. Select COUNTER ("4") from menu.

e. Select FREQ ("1") from menu.

f. Press the upper Trigger MODE button to reinitialize the auto-trigger level.

g. CHECK—Reading is between 149 MHz and 151 MHz and is stable.

2. Check Minimum Sensitivity at 50 MHz

a. Set the generator to produce a 50.0-MHz, 1.3-division display.

b. Press the upper Trigger MODE button to reinitialize the auto-trigger level.

c. CHECK—Reading is between 49.9 MHz and 50.1 MHz and is stable.

d. Disconnect the test equipment from the instrument.

3. Check Frequency Accuracy

a. Connect the time-mark generator output via a 50-Ω cable to the CH 1 input connector.

b. Set the generator to produce 10-ns time markers four divisions in amplitude using CH 1 VOLTS/DIV and VAR VOLTS/DIV.

c. Press the upper Trigger MODE button to reinitialize the auto-trigger level.

d. CHECK—Reading is between 99.9995 MHz and 100.0005 MHz.

4. Check Minimum Input Frequency

a. Set the time-mark generator to produce 2-s time markers.

b. Set:

CH 1 VOLTS/DIV	100 mV
A SEC/DIV	50 ms (knob in)
A TRIGGER MODE	NORM

c. Adjust the A Trigger LEVEL control for a stable trigger.

d. CHECK—Reading is between 499.9975 mHz and 500.0025 mHz.

e. Disconnect the test equipment from the instrument.

5. Check Delay Time

a. Set:

CH 1 VOLTS/DIV	500 mV
CH 1 Input Coupling	GND
A SEC/DIV	20 ns (knob in)
A TRIGGER MODE	AUTO

b. Connect the output of the time-mark generator via a 50-Ω cable to the positive trigger input of the pulse generator.

c. Connect the output of the pulse generator via a 50-Ω cable to the CH 1 input connector.

d. Set the time-mark generator to produce 20-ns time markers.

e. Set the pulse generator to produce a positive 5-ns pulse when externally triggered.

f. Adjust the CH 1 POSITION control to center the CH 1 display.

g. Set the CH 1 Input Coupling to 50 Ω DC.

h. Adjust the pulse generator to produce a 5-division peak-to-peak display, centered about ground.

i. Push INIT @50%.

j. Pull out the SEC/DIV knob.

k. Press the A/B TRIG button.

l. Set the B Trigger:

SLOPE	+ (plus)
MODE	TRIG AFT DLY
SOURCE	VERT
COUPLING	DC

m. Adjust the B Trigger LEVEL for a readout of 0.00 V.

n. Turn the Δ REF OR DLY POS control counterclockwise until the intensified zone stops moving to the left.

o. CHECK—Reading is either 59.5 ns to 60.5 ns or 69.5 ns to 70.5 ns.

6. Check Delta Time Accuracy

a. Press MEASURE button.

b. Select <MORE> ("8") from menu.

c. Select CONFIGURE ("5") from menu.

d. Select RESOLUTION ("4") from menu.

e. Select 10 ps ("4") from menu.

f. Set the A AND B SEC/DIV to 1 μs (knob out).

g. Press A/B TRIG to access the B TRIGGER controls.

h. Press the lower Trigger MODE button to enter TRIG AFT DLY mode.

i. Set the time-mark generator to produce 1-μs time markers.

j. Set the pulse generator to produce a positive 0.5-μs pulse when externally triggered.

k. Press and release the Δt button until the Delta Time readout appears.

l. Turn the Δ control to intensify the rising edge of the second square wave.

m. Turn the Δ REF OR DLY POS control to intensify the rising edge of the second square wave.

n. CHECK—That the averaged Δt reading is between +0.00005 μs and −0.00005 μs.

o. Turn the Δ control to intensify the rising edge of the eleventh square wave.

p. CHECK—Averaged Δt reading is between 8.99990 μs and 9.00010μs.

q. Set the A AND B SEC/DIV to 100 μs (knob out).

r. Set the time-mark generator to produce 0.1-ms time markers.

s. Set the pulse generator to produce a positive 50-μs pulse when externally triggered.

t. Turn the Δ control to intensify the rising edge of the eleventh square wave.

u. Turn the Δ REF OR DLY POS control to intensify the rising edge of the second square wave.

v. CHECK—Reading is between +899.996 μs and +900.004 μs.

w. Press MEASURE button.

x. Select <MORE> ("8") from menu.

y. Select CONFIGURE ("5") from menu.

z. Select RESOLUTION ("4") from menu.

aa. Select AUTO ("1") from menu.

7. Verify Delay-By-Events

a. Set the A SEC/DIV to 100 μs (knob in).

b. Set the A Trigger SLOPE to − (minus).

c. Press the Δt button until the Δt display disappears.

d. Press the MEASURE button.

e. Select <MORE> ("8") from menu.

f. Select DLY-BY-EVENTS ("1") from menu.

g. Select B-SWP ("5") from menu.

h. Select ATRG-STRT ("2") from menu.

i. Select DLY-BY-B ("3") from menu.

j. Select RUN ("8") from menu.

k. Pull out the SEC/DIV knob.

j. Use the Δ REF OR DLY POS and the Δ controls to set the number of delaying events to 1.

k. VERIFY—that the intensified zone moves to each succeeding rising edge as the delaying event count is changed to 2, 3, 4, and 5.

8. Check Logic Trigger

a. Set the A AND B SEC/DIV to 20 ns (knob out).

b. Set the time-mark generator to produce 0.1 μs time markers.

c. Set the pulse generator to produce a positive 5-ns pulse when externally triggered.

d. Set the B Trigger MODE to TRIG AFT DLY.

e. Set the B Trigger SOURCE to CH 1.

f. Press the MEASURE button.

g. Select <MORE> ("8") from menu.

h. Select LOGIC-TRIGGER ("4") from menu.

i. Select A:A-AND-B ("1") from menu.

j. Push in the SEC/DIV knob.

k. Adjust the B Trigger LEVEL for a readout of 0.00 V.

l. Press the A/B TRIG button to illuminate an A Trigger MODE indicator.

m. Adjust the A Trigger LEVEL for a readout of 1.00 V.

n. Set the CH 1 Input Coupling to GND.

o. Turn the CH 1 POSITION control to align the trace with the center horizontal graticule line; do not readjust the CH 1 POSITION control during the remainder of this step.

p. Set the CH 1 Input Coupling to 50 Ω DC.

q. Set X10 MAG on.

r. Turn the Horizontal POSITION control to align the rising edge of the first displayed signal with the intersection of the second vertical graticule and the center horizontal graticule lines.

s. Set the pulse generator to produce a 2-ns pulse when externally triggered.

t. Increase the duration of the pulse until a stable display is obtained.

u. CHECK—Width of the pulse measured at the center horizontal graticule line is less than 4 ns.

v. Set X10 MAG off.

w. Press the upper Trigger MODE button.

x. Press the lower Trigger MODE button.

y. Press the upper Trigger MODE button.

z. Disconnect the test equipment from the instrument.

9. Verify Trigger Delta Delay

a. Connect the leveled sinewave generator's output via a 50-Ω cable to the CH 1 input connector. Set the A SEC/DIV to 10 μs. Set the Horizontal POSITION to midrange.

b. Set the generator for a 50-kHz, 6-division display.

c. Press the Trigger SLOPE button to illuminate the + SLOPE indicator.

d. Press the MEASURE button to enter MENU mode.

e. Select COUNTER ("4") from menu.

f. Select PERIOD ("2") from menu.

g. Press the upper Trigger MODE button to reinitialize the auto-trigger level.

h. Turn the SEC/DIV to 5 μs.

i. Pull out the SEC/DIV knob.

j. Press the A/B TRIG button for B Trigger MODE. Set **B** Trigger MODE to RUN AFTER DELAY.

k. Adjust the Δ REF OR DLY POS control for a delay of 5.00 μs.

l. Press the lower Trigger MODE button once.

m. Press the SLOPE button to select + SLOPE if necessary.

n. Press the lower Trigger MODE button once to select TRIG Δ DLY.

o. Press the Trigger SLOPE button to illuminate the − SLOPE.

p. Adjust the Δ control for a Δt reading of approximately 0.00 μs. The word **"SET"** will appear while making the adjustment.

q. VERIFY—There are two intensified zones on the displayed waveform.

r. VERIFY—The intensified zone moves on the falling edge of the waveform while adjusting the Trigger LEVEL control.

s. Press the lower Trigger MODE button to select TRIG AFT DLY.

t. VERIFY—The intensified zone moves on the rising edge of the waveform while adjusting the Trigger LEVEL control.

u. Disconnect the test equipment from the instrument.

HORIZONTAL (cont)

4. Check Delay Jitter.

a. Set:

TRACKING	Off
A SEC/DIV	1 ms
B SEC/DIV	500 ns (knob out)
B TRIG	RUN AFT DLY

b. Select 1 ms time markers from the Time-Mark Generator.

c. Align the intensified zones with the 10th time marker using the Δ REF OR DLY POS and Δ controls. Superimpose the zones to obtain a Δt readout display of 0.000 ms.

d. Push in the SEC/DIV knob and adjust TRACE SEP to separate the traces.

e. CHECK—On the 2467B for 2 divisions or less of horizontal jitter on the rising edge of both time markers, and on the 2465B for 0.8 divisions or less of horizontal jitter on the rising edge of both time markers.

5. Check SEC/DIV VAR Range and Accuracy.

a. Set:

A SEC/DIV	10 ms (knob in)
SEC/DIV VAR	In detent
Δt	Off (press and release to eliminate Δt readout)
HOLDOFF	B ends A

b. Select 10 ms time markers from the Time-Mark Generator and adjust the Time-Mark Generator variable timing control for exactly 1 time marker per division. Note the variable timing % error on the Time-Mark Generator.

c. Adjust the SEC/DIV VAR control for a sweep-speed readout (on bottom line of readout) of 20 ms and adjust the Time-Mark Generator variable timing control for exactly 2 time markers per division.

d. CHECK—The Time-Mark Generator variable timing % of error has changed 2% or less from the reading noted in part b.

e. Adjust the SEC/DIV VAR control fully CCW.

f. CHECK—Sweep speed readout displays 30.0 ms.

g. Set the Time-Mark Generator variable timing control for exactly 3 time markers per division.

h. CHECK—The Time-Mark Generator variable timing % of error has changed 2% or less from the reading noted in part b.

NOTE

On CTT instruments, rotate the Δ REF OR DLY POS control for the specified delay. As the control is rotated, the readout delay value will be followed by the word "SET", denoting the indirect measurement mode. A few seconds after control movement has stopped, the word "SET" will disappear and the readout will display a direct measurement from the CTT.

i. Set:

A SEC/DIV	50 ms
B SEC/DIV	10 ms (knob in)
SEC/DIV VAR	CW (in detent)
Δt	Off (DLY readout)
B TRIGGER MODE	RUN AFT DLY
Δ REF OR DLY POS	Zero delay

j. Repeat parts b through h for the B Sweep.

k. Rotate the SEC/DIV VAR control CW to the detent position and disconnect the test setup.

6. Check X-Axis Gain.

a. Set:

NOTE

Select channels to set VOLTS/DIV.

VOLTS/DIV

CH 1 and CH 2	10 mV

VERTICAL MODE

CH 2	On
CH 1, CH 3, CH 4, ADD, and BW LIMIT	Off

Horizontal

SEC/DIV	X-Y (knob in)

Input Coupling

CH 1	1 MΩ DC
CH 2	1 MΩ GND

b. Connect a 50 mV standard-amplitude signal from the Calibration Generator to the CH 1 OR X input connector via a 50 Ω BNC cable.

c. CHECK—Signal display amplitude is 4.9 to 5.1 horizontal divisions.

d. Disconnect the test setup.

7. Check X-Axis Bandwidth.

a. Set the CH 1 Input Coupling to 50 Ω DC.

b. Connect a 50 kHz signal from the Primary Leveled Sine-Wave Generator to the CH 1 OR X input connector via a precision 50 Ω BNC cable.

c. Set the generator output for a 6-division horizontal display.

d. Change the generator frequency to 3 MHz.

e. CHECK—Signal display is greater than 4.2 horizontal divisions.

8. Check X-Y Phase Differential.

a. Set the Primary Leveled Sine-Wave Generator for a 1 MHz, 6-division horizontal display.

b. Set the CH 2 VERTICAL MODE off. CH 1 displays automatically.

c. Use the CH 1 VERTICAL POSITION control to vertically center the display on the graticule.

d. CHECK—Ellipse opening is 0.1 division or less, measured horizontally.

e. Set the CH 2 VERTICAL MODE on.

f. Set the generator for a 2 MHz, 6-division horizontal display.

g. Set the CH 2 VERTICAL MODE off.

h. CHECK—Ellipse opening is 0.3 division or less, measured horizontally.

i. Set the CH 2 VERTICAL MODE on.

9. Check X-Axis Low-Frequency Linearity.

a. Set the Primary Leveled Sine-Wave Generator and the CH 1 POSITION control for a 50 kHz, 2-division horizontal display centered on the graticule.

b. Use the CH 1 POSITION control to align the left edge of the signal with the left side vertical graticule line.

c. CHECK—Signal display is 1.8 to 2.2 divisions, measured horizontally.

d. Use the CH 1 POSITION control to position the right edge of the signal on the right side vertical graticule line.

e. CHECK—Signal display is 1.8 to 2.2 divisions, measured horizontally.

f. Disconnect the test setup.

CALIBRATOR, EXTERNAL Z-AXIS AND GATE OUTPUTS

Equipment Required (see Table 4-1)

- Calibration Generator (Item 3)
- Time-Mark Generator (Item 6)
- Oscilloscope with 10X Probe (Item 7)
- 50 Ω BNC T-Connector (Item 8)
- 50 Ω BNC Cables (2 required) (Item 10)

Initial Control Settings.

Control settings not listed do not affect the procedure.

a. Set:

VERTICAL MODE

CH 1 and CH 2	On
CH 3, CH 4, ADD, and INVERT	Off
CHOP/ALT	CHOP
20 MHz BW LIMIT	Off

VOLTS/DIV

CH 1	10 mV
CH 2	500 mV
CH 1 and CH 2 VAR	In detent

Input Coupling

CH 1	1 MΩ DC
CH 2	50 Ω DC

Horizontal

A SEC/DIV	1 ms (knob in)
SEC/DIV VAR	In detent
X10 MAG	Off
ΔV and Δt	Off (press and release until associated readout is off)

TRIGGER

HOLDOFF	B ENDS A (fully CW)
LEVEL	INIT@50%
SLOPE	+ (plus)
MODE	AUTO LVL
SOURCE	CH 1
COUPLING	DC

1. Check CALIBRATOR Repetition Rate.

NOTE

Refer to the Adjustment Procedure to check the accuracy of the CALIBRATOR output levels.

a. Connect a 10X probe from the CALIBRATOR terminal to the CH 1 OR X input connector.

b. Connect 1 ms time markers from the Time-Mark Generator to the CH 2 input connector via a 50 Ω BNC cable.

c. Adjust the CH 2 VOLTS/DIV for several divisions of marker display.

d. CHECK—Horizontal drift for any time marker is 1 division or less per second (10 seconds or more for 1 marker to drift 10 horizontal divisions).

e. Set the CH 2 VERTICAL MODE off.

f. CHECK—1 cycle is displayed per 2 horizontal divisions for each A SEC/DIV setting from 0.1 s to 0.1 μs.

g. Disconnect the test setup.

2. Check External Z-Axis Operation.

a. Set:

INTENSITY	Fully clockwise
A SEC/DIV	1 ms
CH 1 VOLTS/DIV	500 mV

b. Connect a 1 kHz, 2 V standard-amplitude signal from the Calibration Generator to the CH 1 OR X input connector and the rear-panel EXT Z-AXIS input connector using a 50 Ω BNC T-Connector and two 50 Ω BNC cables.

c. CHECK—The positive portion of the 4-division signal display is blanked out.

d. Disconnect the test setup and adjust the CRT INTENSITY as desired.

3. Check A and B GATE Outputs and Verify TRIGGER HOLDOFF.

a. Set:

A SEC/DIV	100 μs
B SEC/DIV	50 μs (knob in)
Δt	Off (DLY readout)
TRIGGER MODE	AUTO
HOLDOFF	Minimum (CCW)
Δ REF OR DLY POS	Zero DLY readout

NOTE

On CTT instruments, rotate the Δ REF OR DLY POS control for the specified delay. As the control is rotated, the readout delay value will be followed by the word "SET", denoting the indirect measurement mode. A few seconds after control movement has stopped, the word "SET" will disappear and the readout will display the direct measurement from the CTT.

b. Connect a test oscilloscope to the A GATE OUT connector (located on the instrument rear panel) via a 50 Ω BNC cable.

c. CHECK—Test oscilloscope displays a signal with a high level between 2.4 V and 5 V and a low level between 0 V and 0.4 V.

d. VERIFY—Duration of the high level is between 1 ms and 1.2 ms.

e. VERIFY—Duration of the low level is between 80 μs and 150 μs.

f. VERIFY—Duration of the low level increases to at least 10 times the time measured in part e when the HOLDOFF control is rotated to the maximum CW position but not in the detent.

g. Move the 50 Ω BNC cable from the A GATE OUT connector to the B GATE OUT connector.

h. CHECK—Test oscilloscope displays a signal with a high level between 2.4 V and 5 V and a low level between 0 V and 0.4 V.

i. VERIFY—Duration of the high portion of the signal is between 500 μs and 600 μs.

j. Disconnect the test setup.

ADDITIONAL FUNCTIONAL VERIFICATION

Equipment Required (see Table 4-1)

10X Probe supplied with Oscilloscope (Item 7)

Initial Control Settings.

Control settings not listed do not affect the procedure.

a. Set:

NOTE

Select channels to set VOLTS/DIV.

VOLTS/DIV

CH 1 and CH 2	0.1 V
CH 1 and CH 2 VAR	In detent
CH 1, CH 2, CH 3, CH 4, ADD, and INVERT	Off
CHOP/ALT	ALT
20 MHz BW LIMIT	Off

Input Coupling

CH 1 and CH 2	1 MΩ DC

Horizontal

A SEC/DIV	1 ms (knob in)
SEC/DIV VAR	In detent
X10 MAG	Off
TRACE SEP	Fully CW

Delta

ΔV and Δt	Off (press and release until associated readout is off)
TRACKING	Off

TRIGGER

HOLDOFF	B ENDS A (fully CW)
LEVEL	Midrange
SLOPE	+ (plus)
A/B TRIG Select	A
MODE	AUTO
SOURCE	VERT
COUPLING	DC

1. Verify ALT, CHOP, and ADD Modes and TRACE SEP.

a. VERIFY—CH 1 trace is visible with no VERTICAL MODE buttons selected.

b. Press the CH 2 VERTICAL MODE button.

c. VERIFY—CH 1 trace is not displayed and the CH 2 trace is displayed.

d. Press the CH 1 VERTICAL MODE button.

NOTE

Separate the traces by approximately 1 division using the VERTICAL POSITION controls. Do not position either trace precisely at graticule center.

e. VERIFY—Both the CH 1 and the CH 2 traces are displayed.

f. Press the ADD button.

g. VERIFY—A third trace (ADD) is displayed.

h. Press the CH 3 VERTICAL MODE button.

i. VERIFY—The CH 3 trace is added to the display.

j. Press the CH 4 VERTICAL MODE button.

k. VERIFY—The CH 4 trace is added to the display.

l. Set the SEC/DIV controls to 50 ms (knob in).

m. VERIFY—5 traces are alternately displayed in the following sequence: CH 1, CH 2, ADD, CH 3, CH 4.

n. Set the TRIGGER MODE to SGL SEQ.

o. VERIFY—After the current sequence of traces is complete, no further traces are displayed.

p. Set the TRIGGER SOURCE to LINE.

q. Press and release the lower TRIGGER MODE button.

r. VERIFY—Each time the lower TRIGGER MODE button is pressed and released, the 5 signal traces appear once (in sequence), the readout display flashes once and the scale illumination flashes on and off.

s. Set the TRIGGER MODE to AUTO LVL and press the CHOP button.

t. VERIFY—The 5 traces appear to be displayed simultaneously.

u. Set:

TRIGGER SOURCE	CH 4
A SEC/DIV	20 μs
B SEC/DIV	10 μs (knob out)
CHOP/ALT	ALT
TRACE SEP	CCW until traces are separated

v. VERIFY—An alternate B sweep trace appears for each A sweep trace (10 traces total).

2. Verify BEAM FIND Operation.

a. Set:

A SEC/DIV	1 ms (knob in)
CH 1 VERTICAL MODE	On
CH 2, CH 3, CH 4 and ADD	Off
X10 MAG	On
Horizontal POSITION	Midrange
Vertical POSITION	Midrange

b. Press and hold the BEAM FIND button.

c. VERIFY—The trace is less than 10 divisions long and remains in the graticule area as the CH 1 POSITION control and the Horizontal POSITION controls are rotated through their complete ranges.

d. Release the BEAM FIND button and set the VERTICAL POSITION and Horizontal POSITION controls to midrange.

3. Check Probe Encoding.

NOTE

Refer to instrument "Operators Manual" for the positioning of the readout display information.

a. Set:

CH 1, CH 2, CH 3, CH 4 VERTICAL MODE	On
CH 1 and CH 2 VOLTS/DIV	100 mV
CH 3 and CH 4 VOLTS/DIV	0.1

b. Connect the standard accessory 10X probe (encoded) to the CH 1 input connector.

c. CHECK—CH 1 readout changes from 100 mV to 1 V.

d. Move the probe to CH 2 and repeat part c for that channel.

e. Move the probe to CH 3.

f. CHECK—Readout changes from 0.1 V to 1 V.

g. Move the probe to CH 4 and repeat part f for that channel.

h. Short probe code ring to ground.

NOTE

If using a P6137 probe, press probe ID button.

i. Check R/O changes to ID for that channel and the trace jumps up approximately 0.5 Div.

j. Repeat for each vertical channel.

k. Disconnect test setup.

WORD RECOGNIZER CHECKS

Equipment Required (see Table 4-1)

10X Probe supplied with Oscilloscope (Item 7)	Pulse Generators (Item 24)
T-connectors (Item 8)	Adapter (Item 25)
BNC Cables (Item 10)	Adapter (Item 26)

1. Initial Setup

Control settings not listed do not affect the procedure.

NOTE

Select channels to set VOLTS/DIV.

a. Set:

VERTICAL VOLTS/DIV

CH 1 and CH 2	2 V
CH 3	500 mV
CH 4	100 mV

VERTICAL MODE

CH 1, CH 2, and CH 3	On

Input Coupling

CH 1 and CH 2	50 Ω DC

Horizontal

A SEC/DIV	200 ns (knob in)

Delta

Δt and ΔV	Off (press and release until associated readout is off)

TRIGGER

SOURCE	CH 1
MODE	AUTO LVL

b. Connect the + trigger output of pulse generator # 1 via a 50-Ω cable to the + trigger input of pulse generator # 2.

c. Connect the output of pulse generator # 1 via a 50-Ω cable and T-connector to the CH 1 input connector. Use the T-connector at the CH 1 input.

d. Connect the output of pulse generator # 2 via a 50-Ω cable and T-connector to the CH 2 input connector. Use the T-connector at the CH 2 input.

e. Connect the Word Recognizer probe to the P6407 input connector at the rear of the instrument.

f. Connect a BNC-male-to-dual-binding post adaptor to the T-connector on the CH 1 input, and connect another BNC-male-to-dual-binding post adaptor to the T-connector on the CH 2 input.

g. Connect a 4-inch bare wire (suitable for connecting a scope probe) to the red binding post of the adaptor connected to the CH 1 input.

h. Connect a 4-inch bare wire (suitable for connecting a scope probe) to the red binding post of the adaptor connected to the CH 2 input.

i. Connect a 2-inch bare wire (suitable for connecting a scope probe) to the black binding post of the adaptor connected to the CH 2 input.

j. Connect both ground leads from the Word Recognizer probe to the bare wire on the black binding post on the CH 2 input.

k. Connect the CH 3 input to the WORD RECOG OUT connector using the instrument X10 probe and a BNC-to-probe-tip adaptor.

l. Set pulse generator # 1 to produce a positive 0.5-μs pulse every 1 μs.

m. Set pulse generator # 2 to produce a positive 400-ns pulse when it receives an external trigger.

NOTE

The lowest point of the HI must not be lower than 2.0 V.

n. Set both pulse generators to produce pulses of +0.6 V LO and +2.0 V HI.

o. Press the MEASURE button.

p. Select <MORE> ("8") from menu.

q. Select LOGIC-TRIG ("4") from menu.

r. Select B:WORD-REC ("6") from menu.

1. If you wish to change the word recognizer display radix:

   a. Press the MEASURE button.

   b. Select <MORE> ("8") from menu.

   c. Select CONFIGURE ("5") from menu.

   d. Select WR-RADIX ("5") from menu.

   e. Select HEX, OCTAL, or BINARY from menu.

s. Connect the clock (C) input of the Word Recognizer to the wire on the red binding post of the CH 1 input.

t. Connect the Q and W0-W15 inputs of the Word Recognizer to the wire on the red binding post of the CH 2 input.

u. Set the A SEC/DIV to 20 ns (knob in).

2. Check Data Setup Time

a. For each test setup described in Table 4-13:

1. Vary (increase) the pulse duration of pulse generator # 2 until the active edge of the CH 2 signal falls about 10 ns after the trigger edge of the CH 1 signal.

2. CHECK—CH 3 is not displaying a signal.

3. Vary (decrease) the pulse duration of pulse generator # 2, moving the active edge of the CH 2 signal to the left until CH 3 displays a stable signal.

4. Press the Δt button.

5. Turn the Δ REF OR DLY POS control to align the delta reference cursor with the first edge of the CH 2 signal.

6. Turn the Δ control to align the delta cursor with the first edge of the CH 1 signal.

7. CHECK—Reading is ≤25 ns.

8. Press the Δt button.

Table 4-13
Data Setup Time Checks

Polarity		Word Recognizer Word Definition	A TRIGGER SLOPE
Pulse Generator # 1	Pulse Generator # 2		
+	+	↓–0-0000	–
+	–	↓–1-FFFF	–
–	–	↑–1-FFFF	+
–	+	↑–0-0000	+

3. Check Data Hold Time

a. For each test setup described in Table 4-14:

1. Vary the pulse duration of pulse generator # 2 until the first edge of the CH 2 signal falls about 10 ns after the trigger edge of the CH 1 signal.

2. CHECK—A stable signal is displayed on CH 3.

3. Vary the pulse duration of pulse generator # 2, moving the first edge of the CH 2 signal to the left until CH 3 no longer displays a stable signal.

4. Press the Δt button.

5. Turn the Δ REF OR DLY POS control to align the delta reference cursor with the first edge of the CH 2 signal.

6. Turn the Δ control to align the delta cursor with the first edge of the CH 1 signal.

7. CHECK—Reading is >4 ns.

Table 4-14
Data Hold Time Checks

Polarity		Word Recognizer Word Definition	A TRIGGER SLOPE
Pulse Generator # 1	# 2		
+	+	↓−1-FFFF	−
+	−	↓−0-0000	−
−	−	↑−0-0000	+
−	+	↑−1-FFFF	+

4. Check Minimum Clock Pulse Width

a. Set pulse generator # 1 to produce a 5-ns positive pulse every 1 μs.

b. Press the A/B TRIG button to select A Trigger MODE.

c. Press the upper Trigger MODE button to reinitialize the auto-trigger level.

d. Press the A/B TRIG button.

e. For each test setup described in Table 4-15:

1. If there is not a stable signal displayed on CH 3, (<2.5 V amplitude), vary (increase) the pulse duration of pulse generator # 1 until CH 3 displays a stable signal.

2. Press the Δt button.

3. Turn the Δ REF OR DLY POS control to align the delta reference cursor with the leading edge of the CH 1 pulse.

4. Turn the Δ control to align the delta cursor with the trailing edge of the CH 1 pulse.

5. CHECK—Reading is ≤20 ns.

6. Press the Δt button.

Table 4-15
Minimum Clock Pulse Width Checks

Polarity		Word Recognizer Word Definition	A TRIGGER SLOPE
Pulse Generator # 1	# 2		
+	+	↑−X-XXXX	+
−	+	↓−X-XXXX	−

5. Check Delay From Selected Edge to WORD RECOG OUT

a. Set:

VERTICAL MODE

CH 3 and CH 4	On
CH 1, CH 2, ADD, and INVERT	Off

VOLTS/DIV

CH 3 VOLTS/DIV	0.1 V (1 V with X10 probe attached)

Horizontal

A SEC/DIV	20 ns (knob in)

b. Connect the instrument X10 probe to the CH 4 input connector and the probe tip to the wire on the red binding post of the CH 1 input.

c. Set pulse generator # 1 to produce a 50-ns positive pulse every 10 μs.

d. Set the A Trigger SOURCE to CH 4.

d. For each test setup described in Table 4-16:

1. Press the Δt button.
2. Turn the Δ REF OR DLY POS control to align the delta reference cursor with the active edge of the CH 4 signal.
3. Turn the Δ control to align the delta cursor with the rising edge of the CH 3 signal.
4. CHECK—Reading is ≤55 ns.
5. Press the Δt button.

Table 4-16
Delay From Selected Edge to WORD RECOG OUT Checks

Polarity		Word Recognizer Word Definition	A TRIGGER SLOPE
Pulse Generator # 1	Pulse Generator # 2		
+	+	↑—X-XXXX	+
−	+	↓—X-XXXX	−

6. Check Word Recognition Delay

a. Set pulse generator # 1 to produce a positive 0.5-μs pulse every 1 μs.

b. Disconnect the C input of the Word Recognizer from the wire on the red binding post of the CH 1 input.

c. Connect the Q and W0-W15 inputs of the Word Recognizer to the wire on the red binding post of the CH 1 input.

d. For each test setup described in Table 4-17:

1. Press the Δt button. Turn the Δ REF OR DLY POS control to align the delta reference cursor with the first edge of the CH 4 signal.
3. Turn the Δ control to align the delta cursor with the rising edge of the CH 3 signal.
4. CHECK—Reading is ≤140 ns.
5. Press the Δt button.

e. Disconnect the probe on the CH 4 input.

Table 4-17
Word Recognition Delay

Polarity		Word Recognizer Word Definition	A TRIGGER SLOPE
Pulse Generator # 1	Pulse Generator # 2		
+	+	X—1-FFFF	+
−	+	X—0-0000	−

7. Check Data Input Coincidence

a. Set:

CH 2 and CH 3	On
CH 4	Off
A SEC/DIV	50 ns (knob in)
SOURCE	CH 2
SLOPE	− (minus)

b. Set pulse generator # 1 to produce a positive 0.5-μs pulse every 1 μs.

c. Set pulse generator # 2 to produce a negative 5-ns pulse when it receives an external trigger.

d. Set the A SEC/DIV to 20 ns (knob in).

e. Set the Word Definition of the Word Recognizer probe to BX0 0000.

f. Connect the Q and W0-W15 inputs of the Word Recognizer to the wire on the red binding post of the CH 2 input.

g. Press the A/B TRIG button to select A Trigger MODE.

h. Press the upper Trigger MODE button to reinitialize the auto-trigger level.

i. Vary (increase) the pulse duration of pulse generator # 2 until further increase makes the CH 3 display stable (>2.5 V amplitude).

j. Press the Δt button.

k. Turn the Δ REF OR DLY POS control to align the delta reference cursor with the falling edge of the CH 2 signal.

l. Turn the Δ control to align the delta cursor with the rising edge of the CH 2 signal.

m. CHECK—Reading is ⩾20 ns and ⩽85 ns.

n. Press the Δt button.

o. Disconnect the test setup.

p. Press the lower Trigger MODE button.

ADJUSTMENT PROCEDURE

INTRODUCTION

IMPORTANT-PLEASE READ BEFORE USING THIS PROCEDURE

The "Adjustment Procedure" is used to restore optimum performance or return the instrument to conformance with its "Performance Requirements" as listed in the "Specification" (Section 1). As a general rule, these adjustments should be performed every 2000 hours of operation or once a year if used infrequently.

PARTIAL PROCEDURES

This procedure is divided into subsections to permit calibration of individual sections of the instrument whenever complete instrument calibration is not required. To perform a partial procedure, first set the instrument as directed in the Initial Setup Conditions at the beginning of the section, then make any changes called for within the procedure. Perform all steps within a subsection, both in the sequence presented and in their entirety to ensure that control settings will be correct for the following steps.

The adjustments in CAL 01, 02, 03, 06, 07 and 09 should be performed in numerical sequence; i.e., CAL 01 should be done before CAL 02, CAL 02 should be done before CAL 03, etc. CAL 04, 05, and 08 are independent of adjustments made in the other calibration routines. Performing partial procedures when setting the automatic calibration constants (i.e., only one or two of the CAL steps) is not recommended and should only be done if the calibration constants set in the preceding steps are known to be correct.

PREPARATION FOR ADJUSTMENT

It is necessary to remove the cabinet to do the Adjustment Procedure. See the cabinet removal instructions in the Maintenance section of this manual, Section 6.

All test equipment items required to do the complete Adjustment Procedure are described in Table 4-1 at the beginning of Section 4, Performance Check Procedure. The specific items of equipment needed to do each subsection in this procedure are listed at the beginning of that subsection.

BEFORE YOU BEGIN:

NOTE

When performing any of the automatic calibration routines (CAL 01 through CAL 08), the CAL/NO CAL jumper P501 must be moved to its CAL position (between pins 2 and 3) before turning the power on. When the desired calibration has been performed, return the jumper to its NO CAL position.

a. Turn instrument Power on.

NOTE

The instrument MUST have a 20-minute warmup period before making any adjustments. Performing the adjustment procedure while the temperature is drifting may cause erroneous calibration settings.

POWER SUPPLIES AND DAC REF ADJUSTMENT

Equipment Required (see Table 4-1)

Oscilloscope With 10X P6131 Probe (Item 7)	Alignment Tool (Item 20)
Digital Multimeter (DMM) (Item 19)	1X Probe (Item 21)

See **ADJUSTMENT LOCATIONS 1** *and* **ADJUSTMENT LOCATIONS 4**

at the back of this manual for test point and adjustment locations.

NOTE

If the instrument displays "DIAGNSTIC. PUSH A/B TRIG TO EXIT" at power on, one of the power-up tests has failed. If the error message on the bottom line of the display is "TEST 04 FAIL xx" where "xx" is 01, 10 or 11, stored calibration data is in error, and the instrument should be recalibrated. If this is the case, pressing the A/B TRIG button will force entry to the normal operating mode; however, the accuracy of any measurement taken could be in error.

If any other error message occurs, the failure is probably not related to calibration. In this case, the instrument should be repaired before attempting calibration.

Initial Control Settings.

Control settings not listed will not affect the procedure.

VERTICAL VOLTS/DIV

CH 2	100 mV
CH 3 and CH 4	100 mV
CH 1 and CH 2 VAR	In detent

VERTICAL MODE

CH 1	On
CH 2, CH 3, CH 4	Off
ADD, INVERT, and BW LIMIT	Off
ALT/CHOP	ALT

VERTICAL POSITION

CH 1	Midrange

Input Coupling

CH 1 and CH 2	1 MΩ DC

Horizontal

SEC/DIV	X-Y (knob in)
SEC/DIV VAR	In detent
POSITION	Midrange

TRIGGER

MODE	AUTO LVL
SOURCE	VERT
COUPLING	DC
SLOPE	+ (plus)
LEVEL	Midrange
HOLDOFF	In detent

Delta

ΔV and Δt	Off (press and release until readout display disappears)
INTENSITY	Visible display
READOUT INTENSITY	Visible display (CW from OFF)
SCALE ILLUM	Fully CCW
FOCUS	Defocused dot

1. Check/Adjust Power Supply DC Levels, Regulation, and Ripple (R1292).

a. Connect the Digital Multimeter (DMM) negative lead to chassis ground. Connect the positive lead to the first test point listed in Table 5-1 (all test points are on the Main Board).

b. CHECK—That the reading is within the limits given in Table 5-1.

c. ADJUST—Volt Ref Adj (R1292) for a DMM reading of precisely 10.00 V. The adjustment is accessible through a hole in the top cover plate.

Table 5-1
Power Supply Voltage and Ripple Tolerances

Power Supply	Test Point (+ Lead)	Reading	Total p-p Ripple	p-p Ripple at Two Times Line Frequency
+10 V	J119-4	+9.99 to +10.01	100 mV	1 mV
+87 V	J119-8	+85.26 to +88.74	80 mV	5 mV
+42.4 V	J119-9	+41.55 to +43.25	80 mV	2 mV
+15 V	J119-6	+14.775 to +15.225	15 mV	11 mV
Digital +5 V	J119-2	+4.85 to +5.15	150 mV	30 mV
Analog +5 V	J119-12	+4.925 to +5.075	15 mV	1 mV
−5 V	J119-5	−4.965 to −5.035	15 mV	1 mV
−8 V	J119-11	−7.88 to −8.12	100 mV	1 mV
−15 V	J119-1	−14.775 to −15.225	10 mV	2 mV

d. Repeat parts a and b for the other test points listed in Table 5-1.

e. Disconnect the DMM.

f. Set the test oscilloscope as follows:

Sweep Speed	5 ms/div
CH 1 Input Coupling	1 MΩ AC
Vertical controls	To display CH 1
Trigger controls	Line source, triggered display
Volts/Division	2 mV
BW Limit	20 MHz

g. Using a 1X probe, connect the test oscilloscope probe ground lead to chassis ground. Connect the probe tip to the first test point listed in Table 5-1.

h. CHECK—Ripple at two times the line frequency and the total peak-to-peak ripple do not exceed the values given in Table 5-1.

i. Repeat part h for each test point in Table 5-1.

j. Disconnect the test oscilloscope.

2. Adjust DAC Ref (R2010)

a. Set:

A SEC/DIV	100 μs
Δt	On (Δt readout)

NOTE

The objective of this step is to make the total range of the DAC output voltage (sum of the CCW and CW readings) equal to 2.5 V.

b. Connect the digital multimeter (DMM) negative lead to the chassis ground. Connect the positive lead to pin 13 of J119 (on the Main Board).

c. Set the DMM to measure approximately 1.5 Vdc.

d. Rotate the Δ control CCW until the DMM reading remains at a constant value (approximately −1.250 V). Note the reading.

e. Rotate the Δ control CW until the DMM reading remains at a constant value (approximately +1.250 V). Note the reading.

f. Add the absolute values of the readings noted in parts d and e together (approximately 2.500 V).

g. Subtract the total in part f from 2.500 V, then divide the difference by two.

h. ADJUST—DAC Ref (R2010 on the Control Board) to add the (signed) number obtained in part g to the reading obtained in part e.

i. Repeat parts d through h as necessary to obtain a total DAC range of 2.500 V.

2467B
CRT ADJUSTMENTS

NOTE

The blue CRT shield must be removed before performing CAL 08.

Equipment Required (see Table 4-1)

Leveled Sine-Wave Generator (Item 2)
50 Ω BNC Cable (Item 10)
Alignment Tool (Item 20)
Oscilloscope with 10X probe (Item 7)
Digital Multimeter (DMM)

See **ADJUSTMENT LOCATIONS 2** *and* **ADJUSTMENT LOCATIONS 4**

at the back of this manual for test point and adjustment locations.

NOTE

When performing the following automatic cal steps, initial setting of the front-panel controls is not required.

1. Adjust Z-AXIS DRIVE (MAX GRID DRIVE-R949)

a. Simultaneously press in and hold the Δt and the ΔV push buttons, then press and hold the SLOPE button. Hold all three buttons in for approximately one second, then release them.

b. CHECK—Top line of the readout display says: "DIAGNSTIC. PUSH A/B TRIG TO EXIT".

NOTE

The "menu" of calibration, test, and exercise routines are in a loop that may be scrolled through in single steps, either forward or backward. Pressing the upper or lower TRIGGER MODE push buttons respectively increments or decrements the menu position by one. As each routine is selected, its name appears in the lower left corner of the readout display.

c. Scroll to CAL 08.

NOTE

In this procedure, pressing the upper TRIGGER COUPLING button increments the routine to the next step. Pressing the lower TRIGGER COUPLING button will return to the previous step.

d. Press and release the upper TRIGGER COUPLING button to initiate the routine.

e. Connect the bench scope through 10X probe to J191 pin 9 (main board). Set bench scope volts/div to 10 V and SEC/DIV to 1 μs.

NOTE

The Bench Scope display will be a combination of Trace and Readout unblanking pulses. The higher amplitude pulses are the Trace unblanking pulse. This pulse is the one the following adjustment refers to. To facilitate triggering, the Bench Scope trigger level should be adjusted to slightly less than 40 V. If the displayed pulse amplitude is much less than approximately 40 V, adjustment of the Bench Scope trigger level may be necessary.

f. ADJUST—Z-Axis Drive (R949) for peak-to-peak pulse amplitude of +40 V.

NOTE

Exclude the first 0.5 division of the pulse when adjusting peak-to-peak amplitude.

g. ADJUST—Δ control to set Max Grid Drive (in lower readout row) to 40 V.

h. Press and release the upper TRIGGER COUPLING button to advance to the next step.

2. Adjust GRID BIAS (R4354)

a. Set SCALE ILLUMINATION (front panel) to full CCW (OFF).

b. ADJUST—Grid Bias (R4354) if necessary to obtain an X-Y dot near center screen.

c. Position the X-Y dot adjacent to a dot in the lower row of readout dots using CH 1 and CH 2 position controls.

d. ADJUST—Grid Bias (R4354) to match the intensity of the X-Y dot to the readout dots. (Defocusing the display may give better resolution.)

e. Press and release the upper TRIGGER COUPLING button to advance to the next step.

3. Adjust TRACE ROTATION (Front Panel), Y–AXIS (R4370), FOCUS PRE-ADJUST (FOCUS RANGE) (R4430), ASTIG (Front Panel) and GEOMETRY (R4350)

a. Using the CH 1 Vertical POSITION control, align the trace with the center horizontal graticule line.

b. Position one of the Δt cursors to the center vertical graticule line using either the Δ or the ΔREF OR DLY POS control.

c. ADJUST—INTENSITY control (front panel) and READOUT INTENSITY control (front panel) for a comfortable display.

d. ADJUST—TRACE ROTATION control (front panel) to align the trace with the center horizontal graticule line.

e. ADJUST—Y-Axis Alignment (R4370) to align the Δt cursor with the center vertical graticule line.

f. Repeat parts d and e as necessary for the best aligned display.

NOTE

Y-Axis and TRACE ROTATION will remain adjusted and are not interactive of the following adjustments.

g. Center FOCUS control (front panel).

h. ADJUST—ASTIG control (front panel), in conjunction with the Focus Pre-Adjust (R4430) for the sharpest possible display near the center graticule.

i. Position the Δt cursors on (or within 0.2 division of) the first and eleventh vertical graticule lines using the ΔREF OR DLY POS and Δ controls.

NOTE

ADJUST X1 Horizontal Gain (R860) if necessary to align the Δt cursors as described in step i above. If the Horizontal Gain (R860) is adjusted, it will be necessary to perform CAL 01 to restore optimum adjustment.

j. Position CH 1 trace near top edge of the graticule and position CH 2 trace near bottom edge of graticule.

k. ADJUST—Geometry (R4350) for minimum curvature of both Δt cursors and traces.

l. ADJUST—Edge Focus (R4342) for sharpest readout characters and cursor dots.

m. Press and release the upper TRIGGER COUPLING switch to advance to the next step.

4. Adjust HIGH DRIVE FOCUS (R4340)

a. Connect a 158 MHz, 8-division signal from the Leveled Sine-Wave Generator to the CH 1 input connector via a 50 Ω BNC cable.

b. Center the display on the graticule.

NOTE

MCP Bias (R4365) may need to be adjusted slightly CW for a visible display.

c. ADJUST—High Drive Focus (R4340) for the best overall focus of the trace.

NOTE

Do not disconnect the Sine-Wave Generator from the CH 1 input for the following two procedure steps.

d. Press and release the upper TRIGGER COUPLING button to advance to the next step.

5. Adjust WRITING RATE THRESHOLD

a. Set SCALE ILLUMINATION control to full CCW (OFF).

NOTE

As this routine is entered, the readout will display instructions for the test. A few seconds after the instructions are displayed the readout will dim. Make adjustments described in this section after the readout has dimmed. Momentarily pressing the BEAM FIND button will reset the test with the corresponding readout information.

b. ADJUST—MCP Bias (R4365) until all zero crossings of sinewaves are just visible with 20 footcandles of light normal to the CRT faceplate.

NOTE

Correct adjustment of the MCP Bias is essential. If the adjustment can not be made as described in part b above because the trace is either too dim or too bright, the Z-Axis Drive can be changed to allow correct adjustment. The Z-Axis Drive is nominally adjusted at +40 Volt peak-to-peak signal. The selectable ranges are 60V, 50V, 40V, 32V, 26V, 20V, and 16V. If the display at part b above is too bright, reduce the Z-Axis Drive by pressing the lower TRIGGER COUPLING button three times to return to step 1 (Adjust Z-Axis Drive). Repeat step 1 using the next lower voltage setting for parts f and g. In a similar manner, if the trace at step 5 part b is too dim, repeat step 1 (Adjust Z-Axis Drive) using the next higher voltage setting for parts f and g and increasing the bench scope trigger level accordingly. After repeating step 1, continue on through the CAL 08 steps until step 5 is reached again.

c. Press and release the upper TRIGGER COUPLING button to advance to the next step.

6. Check WRITING RATE THRESHOLD

a. CHECK—All parts of the displayed flashing sinewave are clearly visible (including zero crossings) with 20 footcandles of light normal to the CRT faceplate.

b. Press and release the upper TRIGGER COUPLING button to advance to the next step.

7. Adjust Z-AXIS TRANSIENT RESPONSE (R4335)

a. Disconnect the bench scope probe from J191 pin 9 (main board).

b. Disconnect the Sine-Wave Generator from CH 1 input.

c. ADJUST—INTENSITY control (front panel) for dimmest visible trace intensity.

d. ADJUST—Z-Axis Transient Response (R4335) for the most uniform intensity of the trace over the first 0.5 division of the trace.

e. Press and release the upper TRIGGER COUPLING button to conclude CAL 08.

NOTE

Steps 2, 4, and 5 (Grid Bias, High Drive Focus, and MCP Bias) are interactive. Adjustments in any of these three sections will require repeating CAL 08 from the beginning until no further adjustments are required in these three steps. This insures proper Writing Rate Threshold as well as maximizing the MCP CRT longevity.

2465B CRT ADJUSTMENTS

Equipment Required (see Table 4-1)

Leveled Sine-Wave Generator (Item 2)

50 Ω BNC Cable (Item 10)

Alignment Tool (Item 20)

See **ADJUSTMENT LOCATIONS 1,** **ADJUSTMENT LOCATIONS 2,** *and* **ADJUSTMENT LOCATIONS 4**

at the back of this manual for test point and adjustment locations.

NOTE

When performing the following automatic cal steps, initial setting of the front-panel controls is not required.

1. Adjust GRID BIAS (R1878)

a. Simultaneously press in and hold the Δt and the ΔV push buttons, then press and hold the SLOPE button. Hold all three buttons in for approximately one second, then release them.

b. CHECK—Top line of the readout display says: "DIAGNSTIC. PUSH A/B TRIG TO EXIT".

NOTE

The "menu" of calibration, test, and exercise routines are in a loop that may be scrolled through in single steps, either forward or backward. Pressing the upper or lower TRIGGER MODE push buttons respectively increments or decrements the menu position by one. As each routine is selected, its name appears in the lower left corner of the readout display.

c. Scroll to CAL 08.

NOTE

In this procedure, pressing the upper TRIGGER COUPLING button increments the routine to the next step. Pressing the lower TRIGGER COUPLING button will return to the previous step.

d. Press and release the upper TRIGGER COUPLING button to initiate the routine.

e. Set SCALE ILLUMINATION control (front panel) full CCW (Off).

f. ADJUST—Grid Bias (R1878) if necessary to obtain an X-Y dot near center screen.

g. Position the X-Y dot adjacent to a dot in the lower row of readout dots using CH 1 and CH 2 position controls.

h. ADJUST—Grid Bias (R1878) to match the intensity of the X-Y dot to the readout dots. (Defocusing the display may give better resolution.)

i. Press and release the upper TRIGGER COUPLING button to advance to the next step.

2. Check Grid Bias Adjustment

a. Set SCALE ILLUMINATION control (front panel) full CCW (Off).

b. CHECK—A dim X-Y dot is visable near graticule center.

c. Set INTENSITY control (front panel) full CCW (Off).

d. CHECK—The dot is no longer visable with the INTENSITY Off.

NOTE

If the dot is not present in the first part of the check or does not fully disappear during the second part of the check; the Grid Bias adjustment step should be repeated. To repeat the Grid Bias Adjust step, press the lower TRIGGER COUPLING button once to return to the Grid Bias Adjustment step and repeat step 1 above.

e. Press and release the upper TRIGGER COUPLING button to advance to the next step.

3. Adjust TRACE ROTATION (Front Panel), Y–AXIS (R4370), FOCUS PRE-ADJUST (FOCUS RANGE) (R4430), ASTIG (Front Panel) and GEOMETRY (R4350)

a. Using the CH 1 Vertical POSITION control, align the trace with the center horizontal graticule line.

b. Position one of the Δt cursors to the center vertical graticule line using either the Δ or the ΔREF OR DLY POS control.

c. ADJUST—INTENSITY control to align the trace with the center horizontal graticule line.

d. ADJUST—TRACE ROTATION control (front panel) to align the trace with the center horizontal graticule line.

e. ADJUST—Y-Axis Alignment (R1848) to align the Δt cursor with the center vertical graticule line.

f. Repeat parts d and e as necessary for the best aligned display.

NOTE

Y-Axis and TRACE ROTATION will remain adjusted and are not interactive of the following adjustments.

g. ADJUST—ASTIG control (front panel), in conjunction with the FOCUS control (front panel) for the sharpest possible display near the center graticule area.

h. Position the Δt cursors on (or within 0.2 division of) the first and eleventh vertical graticule lines using the ΔREF OR DLY POS and Δ controls.

NOTE

Adjust X1 Horizontal Gain (R860) if necessary to position the Δt cursors as described in step h above. If the Horizontal Gain (R860) is adjusted, it will be necessary to perform CAL 01 to restore optimum adjustment.

i. ADJUST—Geometry (R1870) for minimum curvature of both Δt cursors.

j. ADJUST—READOUT INTENSITY control (front panel) to the OFF position.

k. Using the CH 2 Vertical POSITION control, set the CH 2 trace off screen.

l. Connect a 50 kHz, 8-division signal from the Leveled Sine-Wave Generator to the CH 1 input connector via a 50 Ω BNC cable.

m. Center the display on the graticule. Set INTENSITY control as necessary for a well defined display.

n. ADJUST—Edge Focus (R1864), FOCUS control (front panel), and ASTIG control (front panel) for the most uniform focus over the entire display.

NOTE

Slight interaction between Geometry, Edge Focus, and Focus, and Astigmatism is normal. To achieve optimum edge focus it may be necessary to slightly compromise the Geometry adjustment.

o. Disconnect the Sine-Wave Generator from the CH 1 input.

p. ADJUST—READOUT INTENSITY control to display Δt cursors and readout information.

q. CHECK—Readout characters remain focused.

r. REPEAT—Parts i through q as necessary to obtain optimum focus.

s. Press and release the upper TRIGGER COUPLING button to advance to the next step.

4. Adjust HIGH DRIVE FOCUS (R1842)

a. Connect a 10 MHz, 6-division signal from the Leveled Sine-Wave Generator to the CH 1 input connector via a 50 Ω BNC cable.

b. Center the display on the graticule.

c. ADJUST—Horizontal POSITION control to view the sweep start.

d. ADJUST—High Drive Focus (R1842) for the best overall focus of the trace.

NOTE

Do not disconnect the Sine-Wave Generator from the CH 1 input.

e. Press and release the upper TRIGGER COUPLING button to advance to the next step.

5. Adjust HORIZONTAL DYNAMIC CENTERING (R3401)

a. Center the display on the graticule.

b. ADJUST—Horizontal Dynamic Centering (R3401) for minimum horizontal display shift as the INTENSITY control (front panel) is repeatedly changed from minimum to maximum trace intensity.

NOTE

Disregard any vertical shift of the waveform during the adjustment.

c. Disconnect the Sine-Wave Generator from the CH 1 input.

d. Press and release the upper TRIGGER COUPLING button to advance to the next step.

6. Adjust VERTICAL DYNAMIC CENTERING (R3407)

a. ADJUST—Vertical Dynamic Centering (R3407) for minimum vertical deflection of the intensified zone with respect to the trace.

NOTE

Correct adjustment will align the intensified zone with the trace such that a single horizontal trace results with no vertical deflection difference between the trace and the intensified zone.

b. Press and release the upper TRIGGER COUPLING button to conclude CAL 08.

CH 1 AND CH 2 INPUT CAPACITANCE, AND VERTICAL READOUT JITTER ADJUSTMENTS

Equipment Required

Calibration Generator (Item 3)	Alignment Tool (Item 20)
50 Ω BNC Cable (Item 10)	Normalizer (Item 22)
50 Ω Termination (Item 12)	

See **ADJUSTMENT LOCATIONS 3** *and* **ADJUSTMENT LOCATIONS 4**

at the back of this manual for test point and adjustment locations.

Initial Control Settings.

Control settings not listed do not affect the procedure.

VERTICAL VOLTS/DIV

CH 1 and CH 2	100 mV
CH 1 and CH 2 VAR	In detent

Input Coupling

CH 1 and CH 2	1 MΩ DC

VERTICAL MODE

CH 1	On
CH 2, CH 3, CH 4	Off
ADD, INVERT, and BW LIMIT	Off
ALT/CHOP	ALT

VERTICAL POSITION

CH 1	Midrange

Horizontal

A SEC/DIV	100 μs (knob in)
SEC/DIV VAR	In detent
Horizontal POSITION	Midrange

TRIGGER

MODE	AUTO LVL
SOURCE	VERT
COUPLING	DC
SLOPE	+ (plus)
LEVEL	Midrange
HOLDOFF	In detent

Delta

ΔV and Δt	Off (press and release until readout display disappears)
INTENSITY	Left of center
READOUT INTENSITY	As required for a visible display
SCALE ILLUM	Fully CCW
FOCUS	Best focused display

1. Adjust CH 1 and CH 2 Input Capacitance (C105 and C205).

NOTE

The objective of this adjustment is to match the input capacitance of the 50 mV per division position of the VOLTS/DIV switches to the 0.1 mV per division position. The front corner of an input square-wave signal is used to indicate when the capacitances are matched.

a. Connect a 1 kHz square-wave signal from the Calibration Generator high-amplitude output to the CH 1 OR X input connector via a 50 Ω BNC cable, a 50 Ω termination, and a normalizer. Adjust the generator output level for a 6-division signal vertically centered on the graticule.

b. Set the normalizer for a square front corner over approximately the first 40 μs (0.4 division) of the positive portion of the waveform.

c. Change the CH 1 VOLTS/DIV switch to the 50 mV position and adjust the generator for a 6-division signal display.

d. ADJUST—The CH 1 50 mV C Adj (C105 on the Main Board) for the same waveform front corner noted in part b.

e. Repeat parts b through d until no change is observed in the waveform front corner when the CH 1 VOLTS/DIV switch is alternated between the 50 mV and 0.1 V positions. When switching between positions, reestablish the reference display amplitude at each position, and observe the square-wave front corner to make the comparison.

f. Move the input signal to CH 2 and change the VERTICAL MODE to display CH 2 only. Adjust the generator amplitude for a 6-division signal amplitude.

g. Set the normalizer for a square front corner over approximately the first 40 μs (0.4 division) of the positive portion of the waveform.

h. Change the CH 2 VOLTS/DIV switch to the 50 mV position and adjust the generator for a 6-division display.

i. ADJUST—The CH 2 50 mV C Adj (C205 on the Main Board) for the same waveform front corner noted in part g.

j. Repeat parts g through i until no change is observed in the waveform front corner when the CH 2 VOLTS/DIV switch is alternated between the 50 mV and 0.1 V positions. When switching between positions, reestablish the reference signal amplitude at each position, and observe the square-wave front corner to make the comparison.

k. Disconnect the test setup.

2. Adjust Vertical Readout Jitter (R618).

NOTE

If the previous step was not performed, first set up the Initial Control Settings before, then proceed as follows.

a. Set:

VERTICAL

CH 1 Input Coupling	50 Ω DC
CH 1 VERTICAL MODE	On
CH 2, CH 3, and CH 4 VERTICAL MODE	Off

Horizontal

A SEC/DIV	500 μs (knob in)

b. Press and release the ΔV button to obtain a ΔV display.

c. Use the Δ REF OR DLY POS control to position one cursor 3 divisions above graticule center. Use the Δ control to position the other cursor 3 divisions below graticule center.

d. Connect a 1 kHz, fast-rise signal from the Calibration Generator to the CH 1 OR X input connector via a 50 Ω BNC cable.

e. Set the generator output level for an 8-division display.

f. Use the CH 1 Vertical and Horizontal POSITION controls to center the CH 1 display on the graticule.

g. ADJUST—Vertical Readout Jitter (R618) for minimum vertical jitter of the readout characters and cursors.

h. Disconnect the test setup.

AUTOMATIC CALIBRATION CONSTANTS, HORIZONTAL AND VERTICAL GAIN, CENTERING, AND TRANSIENT RESPONSE ADJUSTMENTS

NOTE

Within the following procedures, the calibration constants for timing, vertical gain, trigger level, transient response, and parametric measurements are generated by the system microprocessor and are stored in nonvolatile memory. The adjustments in CAL 01, 02, 03, 06, 07, and 09 should be performed in sequence; i.e., CAL 01 should be done before CAL 02, CAL 02 should be done before CAL 03, etc. Performing partial procedures (i.e., only one or two of the CAL steps) is not recommended and should only be done if the calibration constants that would have been set in the preceding steps are known to be correct.

The CAL functions are available only if the CAL/NO CAL jumper (P501 on the Control Board) is in the CAL position (between pins 2 and 3) when power is turned on. When the automatic calibration procedures are completed, return the jumper to the NO CAL position to prevent entry into the calibration routines.

When performing the automatic CAL steps, initial setting of the front-panel controls is not required.

Equipment Required (see Table 4-1)

- Calibration Generator (Item 3)
- Time-Mark Generator (Item 6)
- Oscilloscope (Item 7)
- 50 Ω BNC Cable (Item 10)
- Dual-Input Coupler (Item 11)
- 5X Attenuator (Item 17)
- Digital Multimeter (DMM) (Item 19)
- Alignment Tool (Item 20)
- Tunnel Diode Pulser (Item 23)

See **ADJUSTMENT LOCATIONS 4**

at the back of this manual for test point and adjustment locations.

CAL 01—HORIZONTAL

1. Check/Adjust Horizontal Timing, X1 Gain (R860), X10 Gain (R850), Hrz Ctr (R801), and Trans Resp (R802).

a. Simultaneously press in and hold the Δt and the ΔV push buttons, then press and hold the SLOPE switch. Hold all three switches in for approximately one second, then release them.

b. CHECK—Top line of the readout display says: "DIAGNSTIC. PUSH A/B TRIG TO EXIT".

NOTE

The "menu" of calibration, test, and exercise routines are in a loop that may be scrolled through in single steps, either forward or backward. Pressing the upper or lower TRIGGER MODE switch respectively increments or decrements the menu position by one. As each routine is selected, its name appears in the lower left corner of the readout display.

When performing a calibration step, touch only the specific control or controls called out in the procedure. Movement of other controls may cause erroneous calibration results.

c. Scroll to CAL 01.

CAUTION

Upon entering CAL 01, the Input Coupling is automatically set to 50 Ω DC and the 50 Ω OVERLOAD protection is disabled. Before starting the procedure, make sure any 50 Ω OVERLOAD condition has been cleared.

NOTE

In this procedure, pressing the upper TRIGGER COUPLING switch stores the current calibration parameter being set and increments the routine to the next step (except where otherwise noted).

d. Connect the DMM, set to measure approximately 500 mV, to the CALIBRATOR output.

e. Press and release the upper TRIGGER COUPLING switch.

NOTE

The CALIBRATOR output will go to its LO level on odd CAL steps and to its HI level on even steps.

f. CHECK—Readout indicates ADJUST Δ, (step) 0, CH 1 PROBE TO TP800 ON MAIN BD.

g. Connect a P6137 probe from CH 1 to TP800, at rear of main board near readout connector.

h. ADJUST—Δ REF to center signal on displayed cursors, and ADJUST—Δ control to join traces.

i. Press and release the upper TRIGGER COUPLING switch.

j. CHECK—CALIBRATOR output voltage is 0 mV ±1 mV.

k. Disconnect the probe from TP800 and from the CH 1 Input.

l. CHECK—Readout indicates ADJUST Δ (step) 1, 100 μs (for A Sweep), and 1 μs (for B Sweep).

NOTE

The readout prompts the operator by showing the control to be moved (upper left corner), the autocal step number (upper right corner), the A-Sweep speed (bottom right center), and the B-Sweep speed (bottom right corner) as set up by the routine. An example (from step l above) is:

ADJ Δ	1
	100 μs 1 μs

m. Connect the Time-Mark Generator, set for 0.1 ms time markers, to the CH 1 OR X input connector via a 50 Ω BNC cable.

n. Set:

VOLTS DIV	As needed for a convenient signal display amplitude
TRACE SEP	As needed to separate the A and B Sweeps

CH 1 POSITION	As needed to view both A and B Sweeps
Horizontal POSITION	Position start of trace at the left graticule line

NOTE

In the following calibration routine some sequential pairs of steps are iterative, i.e., the earlier step is recalled if an adjustment is made in the later step. Occasionally, on the earlier of some of these pairs, the readout may indicate "LIMIT" before the correct control setting is reached. If this occurs, proceed to the next AUTOMATIC CAL step. After the adjustment at the next step is performed, the previous step will automatically be recalled, and the adjustment may be performed in the normal manner.

o. ADJUST—Δ REF OR DLY POS and Δ controls to align both the intensified zones with the 6th time marker (near graticule center) and to superimpose the delayed B-ep time markers. Press and release the upper TRIGGER COUPLING switch.

p. CHECK—CALIBRATOR output voltage is between 398 mV and 402 mV of the reading noted in part j. Disconnect the DMM when through.

q. CHECK—Readout indicates ADJ Δ (step) 2, 100 μs (for A Sweep), and 1 μs (for B Sweep).

r. ADJUST—Δ REF OR DLY POS control to intensify the 2nd time marker, and ADJUST—Δ control to intensify the 10th time marker. Superimpose the delayed B Sweep time markers within 0.2 division.

s. Press and release the upper TRIGGER COUPLING switch.

t. CHECK—Readout indicates ADJ Δ (step) 3, 300 μs (for A Sweep), and 1 μs (for B Sweep).

u. ADJUST—Δ REF OR DLY POS control to intensify the 4th time marker, and ADJUST—Δ control to intensify the 28th time marker. Superimpose the delayed B Sweep time markers within 1 division.

v. Press and release the upper TRIGGER COUPLING switch. If the adjustment in step 3 was changed, step 2 will be recalled; otherwise step 4 will be initiated.

w. CHECK—Readout indicates ADJ Δ (step) 4, 100 μs (for A Sweep), and 1 μs (for B Sweep). Set the Time-Mark Generator for 5 μs time markers.

x. ADJUST—Δ control CCW until no further movement of the B Sweep display occurs. Note the position of the 1st time marker, then adjust the Δ control CW until the 2nd time marker moves to the left and aligns with the position just noted.

NOTE

Movement of the Δ REF control at this point will adversely affect the calibration.

y. Press and release the upper TRIGGER COUPLING switch. Set the Time-Mark Generator for 10 μs time markers.

z. CHECK—Readout indicates X1, X10, HRZ CTR, (step) 5, and 10 μs (for A Sweep) and two vertical cursors appear on the display.

aa. ADJUST—X1 Gain (R860) and Hrz Ctr (R801) to align the two cursors with the 2nd and 10th vertical graticule lines, then adjust X10 Gain (R850) for 1 time marker per division.

bb. Press and release the upper TRIGGER COUPLING switch. Set the Time-Mark Generator for 10 ms time markers.

cc. CHECK—Readout indicates ADJ, (step) 6, 10 ms (for A Sweep), and 100 μs (for B Sweep).

dd. ADJUST—Δ REF OR DLY POS control to intensify the 2nd time marker, and ADJUST—Δ control to intensify the 10th time marker. Superimpose the delayed B Sweep time markers within 0.2 division.

ee. Press and release the upper TRIGGER COUPLING switch. Set the Time-Mark Generator for 1 μs time markers.

ff. For each step in Table 5-2, do the following:

1. Adjust the Δ REF OR DLY POS and Δ controls, as necessary, to intensify the indicated time marks on the A Sweep and superimpose the displayed B Sweep markers within the listed limits.

2. Press and release the upper TRIGGER COUPLING switch.

NOTE

If the Δ control is adjusted at step 9, 12 or 14, the previous step will be repeated.

Table 5-2
Horizontal Timing

Step Number	Time-Marker Period	ΔREF Marker	Δ Marker	Superposition Tolerance In Divisions
7	1 μs	2	10	0.2
8	2 μs	2	10	0.2
9	2 μs	4	28	1.2
10	10 μs	2	10	0.2
11	50 μs	2	10	0.2
12	50 μs	4	28	1.2
13	0.5 μs	2	10	0.2
14	0.5 μs	4	28	1.2
15	50 ns	3	19	0.2
16[a]	20 ns	2	10	0.1

[a]Use the Δ control to adjust for approximately 1 Time-Marker per division. Set Time Mark Generator for 2 ns markers. Adjust volts/div for display amplitude of > 3 divisions. Adjust the Δ control to superimpose the displayed B Sweep Markers. Return volts/div to original amplitude after making the adjustment.

gg. Set the TRACE SEP fully CW.

hh. Connect the Time Mark Generator output to CH 1 of both the IUT (instrument under test) and the bench scope via a BNC "T" and two 50 Ω BNC cables. Connect B GATE OUT of IUT to CH 2 of bench scope via a 50 Ω BNC cable.

ii. Set bench scope to view CH 1, with TRIGGER SOURCE CH 2. CH 1 and CH 2 coupling 50 Ω.

jj. For each step in Table 5-3 (except step 28), adjust the Δ control for roughly the listed number of markers over the center 8 divisions, then superimpose markers on bench scope screen. Manually set SEC/DIV setting of bench scope to keep a usable time mark as listed in Table 5-3. Use IUT DELAY POS to bring markers on screen. Some sweep speeds might require adjusting holdoff to see both markers. When markers are superimposed, press and release the upper TRIGGER COUPLING switch. If the Δ control is adjusted at step 18, 20, 23, or 25, the previous step will be repeated. At step 28, adjust Trans Resp (R802 on the Main Board) as indicated.

NOTE

Change the CH 1 VOLTS/DIV switch setting as necessary to maintain adequate signal display amplitude.

Step 28 requires the 2 ns time marks to be input through a dual input coupler to CH 1 and CH 2. Center the two waveforms.

NOTE

If the remainder of the Adjustment Procedure will not be performed (in totality), readjustment of Horizontal Readout Jitter (R805) may be necessary if the X1 Gain (R860) or the X10 Gain (R850) was changed. See subsection 2 on page 5-16 for that procedure.

Table 5-3
Horizontal Timing

Step No.	Bench Scope Time/DIV	Time-Marker Period	Markers Over 8 Divisions	Bench Scope Superposition Tolerance in Divisions
17	200 ns and X10 (20 ns)	1 μs	8	0.2
18	200 ns and X10 (20 ns)	1 μs	24	1.2
19	500 ns and X10 (50 ns)	2 μs	8	0.2
20	500 ns and X10 (50 ns)	2 μs	24	1.2
21	2 μs and X10 (200 ns)	10 μs	8	0.2
22	10 μs and X10 (1 μs)	50 μs	8	0.2
23	10 μs and X10 (1 μs)	50 μs	24	1.2
24	100 ns and X10 (10 ns)	500 ns	8	0.2
25	100 ns and X10 (10 ns)	500 ns	24	1.2
26	20 ns and X10 (2 ns)	100 ns	8	0.2
27	20 ns and X10 (2 ns)[a]	20 ns	8	0.2
28	na	2 ns	2[b]	na
29	200 μs and X10 (20 μs)	1 ms	8	0.2
30[c]	na	5 ns	8	na
31[c]	na	10 ns	8	na
32[ce]	na	10 ns	8	na
33[de]	na	2 ns	4	na
34[de]	na	2 ns	4	na

[a]Use the Δ control to adjust for approximately 1 Time-Marker per division. Set Time Mark Generator for 5 ns markers. Adjust the Δ control to superimpose the displayed bench scope display. The bench scope holdoff may require adjustment.

[b]Adjust Trans Resp (R802) for precisely 2 cycles between the 2nd and 10th graticule lines at the INTERSECTIONS on the two waveforms.

[c]Adjust volt/div for > 3 division amplitude. Adjust Δ for 1 time marker per division over the center 8 divisions.

[d]Adjust volt/div for 1 to 4 division amplitude. Adjust Δ for 1 time marker per 2 divisions over the center 8 divisions. To do this, set Horizontal Position control CCW and note end of sweep timing over the center 8 divisions. Return Horizontal Position control CW to locate beginning of sweep. Some compromise of the Δ adjustment may be necessary to obtain best timing accuracy over the center 8 divisions at the start and end of sweep.

[e]Steps 32, 33, and 34 are for 2465B instruments with serial numbers B012946 and above, and 2467B instruments with serial numbers B010537 and above.

kk. Disconnect the test setup.

CAL 02—VERTICAL

2. Check/Adjust Vertical Preamplifier Gain, Gain (R638), and Vertical Centering (R639).

NOTE

If the previous step (CAL 01) was not performed, the adjustments in this subsection should only be performed if those constants that would have been set in CAL 01 are known to be correct.

a. Set the front-panel INTENSITY control at midrange.

b. Scroll to CAL 02.

c. Press and release the upper TRIGGER COUPLING switch. The instrument will automatically increment through steps 100 to 110.

d. CHECK—Readout indicates CH 1 VAR, CH2 POS, (step) 111, 500 mV.

NOTE

The readout prompts the operator by showing the controls to be moved (upper left corner and upper center), the autocal step number (upper right corner), the amplitude of signal to be applied to either the CH 1 or CH 2 connectors (lower left corner), and any other scope function that is enabled. An example (from step d above) is:

CH1 VAR CH2 POS 111
500 mV

e. Connect a 0.5 V, standard-amplitude signal from the Calibration Generator to the CH 1 OR X input connector via a 50 Ω BNC cable.

f. Use the CH 2 POSITION control to vertically position the trace to within 1 division of the center graticule line.

g. ADJUST—CH 1 POSITION and VOLTS/DIV VAR controls to obtain a 10-division horizontal signal. Press and release the upper TRIGGER COUPLING switch.

NOTE

When step 111 is performed, step 112 is also automatically done. No indication of step 112 will be shown unless a LIMIT error is indicated.

NOTE

In the following steps, if the "LIMIT" message appears, it probably indicates that the TRIGGER COUPLING (step) switch was moved before the required signal was applied. Press and release the lower TRIGGER COUPLING switch, verify that the correct signal is applied, then press and release the upper TRIGGER COUPLING switch.

h. CHECK—First step number listed in Table 5-4 appears in the readout.

Table 5-4
Vertical Calibration Signals

Autocal Step Readout Display	Standard-Amplitude Signal to Apply
113[a]	0.5 V
115	0.2 V
116	0.1 V
117	50 mV
118	20 mV
119	1 V
120	10 V

[a]When step 113 is performed, step 114 is also automatically done. No indication of step 114 will be shown unless a LIMIT error is encountered.

i. Apply the corresponding standard-amplitude signal from the Calibration Generator, then press and release the upper TRIGGER COUPLING switch.

j. Repeat steps h and i for each step-signal combination listed in Table 5-4.

k. Move the signal to the CH 2 input connector.

l. CHECK—Readout indicates CONNECT SIGNAL TO CH 2, (step) 121, 500 mV, 500 mV, and BWL.

m. Set the Calibration Generator for a 500 mV standard-amplitude signal, then press and release the upper TRIGGER COUPLING switch.

NOTE

When step 121 is performed, step 122 is also automatically done. No indication of step 122 will be shown unless a LIMIT error is indicated.

n. CHECK—First step number listed in Table 5-5 appears in the readout.

o. Apply the corresponding standard-amplitude signal, then press and release the upper TRIGGER COUPLING switch.

p. Repeat steps n and o for each step-signal combination listed in Table 5-5.

Table 5-5
Vertical Calibration Signals

Autocal Step Readout Display	Standard-Amplitude Signal to Apply
123[a]	0.5 V
125	0.2 V
126	0.1 V
127	50 mV
128	20 mV
129	1 V
130[b]	10 V

[a]When step 123 is performed, step 124 is automatically done. No indication of step 124 will be shown unless a LIMIT error is encountered.

[b]When step 130 is performed, step 131 is automatically done. No indication of step 131 will be shown unless a LIMIT error is encountered.

q. CHECK—Procedure automatically steps through steps 132-141 (DC balance).

r. CHECK—Readout indicates CONNECT SIGNAL TO CH 1, 50mV, and BWL.

s. Move the signal to the CH 1 OR X input connector and set the Calibration Generator for a 50 mV standard-amplitude signal, then press and release the upper TRIGGER COUPLING switch. Wait approximately 10 seconds for automatic calibration of the ΔV cursors.

t. CHECK—Readout indicates VERT CENTER GAIN.

u. ADJUST—Gain (R638) for precisely 5 divisions between the two horizontal cursors.

v. ADJUST—Vertical Centering (R639) to center the cursors on the graticule (align the cursors with the dotted 0% and 100% graticule lines).

w. Press and release the upper TRIGGER COUPLING switch. The microprocessor continues calibrating the vertical. Remove signal from CH 1 input.

CAL 03—TRIGGERING

3. Check/Adjust Triggering.

NOTE

If the previous steps (CAL 01 and CAL 02) were not performed, the adjustments in this subsection should only be performed if those constants that would have been set in CAL 01 and CAL 02 are known to be correct and if a DC Balance has been performed after a 20-minute warmup period.

a. Scroll to CAL 03.

b. Press and release the upper TRIGGER COUPLING switch.

c. CHECK—Procedure automatically steps from 200 through 214 and stops at 215.

d. CHECK—Readout indicates CH 1, 500 mV, and (step) 215.

NOTE

The readout prompts the operator by showing which connector the input signal should be applied to (upper left corner), the amplitude of that signal (upper center), and the autocal step number (upper right corner). An example (from step d above) is:

CH1 500 mV 215

e. Connect a 0.5 V standard-amplitude signal from the Calibration Generator to the CH 1 OR X input connector via a 50 Ω BNC cable.

f. Press and release the upper TRIGGER COUPLING switch.

g. CHECK—Readout indicates CH 1, 500 mV, and (step) 216.

h. Press and release the upper TRIGGER COUPLING switch.

i. CHECK—Readout indicates CH 2, 500 mV, and (step) 217.

j. Move the signal to the CH 2 input connector. Press and release the upper TRIGGER COUPLING switch.

k. CHECK—Readout indicates CH 3, 500 mV, and (step) 218.

l. Move the signal to the CH 3 input connector. Press and release the upper TRIGGER COUPLING switch.

m. CHECK—Readout indicates CH 3, 2V, and (step) 219.

n. Change the generator output level to 2 V, then press and release the upper TRIGGER COUPLING switch.

o. CHECK—Readout indicates CH 4, 500 mV, and (step) 220.

p. Move the signal to the CH 4 input connector and change the generator output level to 0.5 V. Press and release the upper TRIGGER COUPLING switch.

q. CHECK—Readout indicates CH 4, 2V, and (step) 221.

r. Change the generator output level to 2 V, then press and release the upper TRIGGER COUPLING switch.

s. Disconnect the test setup.

CAL 04—CH 2 DELAY ENABLE/DISABLE

4. Check/Adjust CH 2 Delay Enable/Disable.

a. Scroll to CAL 04.

b. Press and release the upper TRIGGER COUPLING switch to initiate the routine.

c. CHECK—Readout alternately indicates "ENABLED" and "DISABLED" each time the upper TRIGGER COUPLING switch is pressed and released.

d. Leave the readout display indicating "ENABLED". Press and release the A/B TRIG button to exit the routine.

e. Connect a 100 kHz, positive-going signal from the Calibration Generator fast-rise output to the CH 1 OR X and CH 2 input connectors via a 50 Ω BNC cable, a 5X attenuator, and a Dual-Input Coupler.

f. Set:

VERTICAL MODE

CH 1 and CH 2	On

VOLTS/DIV

CH 1 and CH 2	10 mV

Input Coupling

CH 1 and CH 2	50 Ω DC

Horizontal

A SEC/DIV	5 ns (knob in)

TRIGGER

SOURCE	CH 1
MODE	AUTO LVL
COUPLING	DC
SLOPE	+ (plus)

g. Set the generator amplitude for a 3- to 5-division display amplitude. Use the CH 1 and CH 2 POSITION controls to vertically overlay the traces near the center of the graticule area.

h. Set the Horizontal POSITION control to set the rising edge of the signal near the center vertical graticule line.

i. Press the X10 MAG button to obtain a magnified display.

j. Pull out the SEC/DIV knob.

k. CHECK—Readout indicates "CH 2 DLY—TURN Ω" and that the Δ control will move the leading edge of the CH 2 trace at least 1 division to either side of the CH 1 trace.

l. ADJUST—Δ control to superimpose the leading edges.

m. Push in the SEC/DIV knob.

NOTE

If the CH 2 Delay Adjust feature is to be disabled for normal instrument use, perform the following steps; otherwise, proceed to CAL 05.

n. Reenter the Diagnostic Monitor by pressing the ΔV and Δt buttons simultaneously (hold them in), then press and hold the TRIGGER SLOPE button. Release the buttons after about 1 second.

o. Scroll to CAL 04.

p. Press and release the upper TRIGGER COUPLING switch until the readout indicates "DISABLED."

q. Press and release the A/B TRIG button to return to normal operating mode.

CAL 05—Set HRS ON and PWR ON/OFF cycles.

5. Check/Adjust Hours On and Power On/Off cycles.

a. Scroll to CAL 05.

b. Press and release the upper TRIGGER COUPLING switch to initiate the routine.

c. CHECK—Readout indicates HRS ON xxx PWR ON/OFF xxx Δ REF HRS Δ PWR PUSH MAG 10/1.

d. Press and release the lower TRIGGER SOURCE and then press and release the lower TRIGGER MODE to reset HRS ON and PWR ON/OFF to zero.

NOTE

HRS ON and PWR ON/OFF can be set to any value from 0-99999 with the Δ REF and Δ controls. The X10 MAG Switch can be used to select increment by 10 or increment by 1 mode.

e. Press and release the lower TRIGGER COUPLING switch to exit routine.

CAL 06-VERTICAL TRANSIENT RESPONSE

6. Check/Adjust Vertical Transient Response

NOTE

If CAL 02 was not performed, the adjustments in this subsection should only be performed if those constants that would have been set in CAL 02 are known to be correct.

a. Scroll to CAL 06.

b. Press and release the upper TRIGGER COUPLING button to initiate the routine.

c. CHECK—Readout indicates ADJ Δ (step) 1, 10 mV, 100 ns.

d. Connect the high-amplitude output of the Calibration Generator to the CH 1 OR X input connector via a 50 ohm BNC cable, a Tunnel Diode Pulser, and a 5X attenuator.

e. Set the generator Period switch to 100 kHz, and set the generator amplitude control to maximum.

f. Rotate the pulser Trigger control CW (from a fully CCW position) until a stable pulse first appears on the graticule. Over adjustment of the pulser Trigger control will lead to erroneous transient response adjustment. Display amplitude will be approximately 5 divisions. The oscilloscope TRIGGER LEVEL control may need to be adjusted to obtain a stable trigger.

NOTE

As a guide when performing the following adjustments, optimum performance is achieved when the CH 1 and CH 2 step response aberrations are ≤ 4% over the first 10 ns of the pulse when using 10 mV/division deflection factors (≤ 0.2 division on a 5-division signal).

g. Press and release the upper TRIGGER COUPLING button twice to advance to step 3.

h. CHECK—Readout indicates ADJ Δ (step) 3, 10 mV, 10 ns.

i. ADJUST—Trans Resp Adjustments C403, R411, L403, R417, and Δ for flattest corner over first 5 ns. The total system will tune best if the indicator cursor is in the 7th or 8th horizontal division.

NOTE

Inductor L403 is a selectable component chosen to match transient response characteristics of the Vertical system. If spreading the coil turns will not correct the front corner overshoot, a smaller value coil should be installed. Likewise, a larger coil can be installed to raise the front corner. The proper coils to use are:

90	*nH-5*	*turn*	*inductor*	*Part No.*	*108-0620-00*
80	*nH-4*	*turn*	*inductor*	*Part No.*	*108-0552-00*
60	*nH-3*	*turn*	*inductor*	*Part No.*	*108-0420-00*
45	*nH-2*	*turn*	*inductor*	*Part No.*	*108-0578-00*

j. Turn A SEC/DIV VAR control CCW and ADJUST CRT termination (R1501) for flattest waveform over the first 0.2 division.

k. Set SEC/DIV VAR to detent.

l. Press and release the upper TRIGGER COUPLING button.

m. CHECK—Readout indicates ADJ Δ (step) 4, 10 mV, 100 ns.

n. Connect the high amplitude generator, Tunnel Diode Pulser, 5X attenuator combination to CH 2 input via a 50 ohm BNC cable.

NOTE

Pressing the lower TRIGGER COUPLING button at any step of CAL 06 will return to step 1. By then pressing the upper TRIGGER COUPLING button repeatedly, the routine can be advanced to the desired step. This is useful for cal steps 1, 2, 3, and 4 which may require some compromise of adjustments.

o. ADJUST—Δ for the flattest waveform.

NOTE

Some compromise may be necessary between step 3 and 4 for the flattest corner over first 5 ns.

p. Press and release the lower TRIGGER COUPLING button to return to step 1.

q. Disconnect the Tunnel Diode pulser and connect the fast rise output of the Calibration Generator to CH 1 OR X via a 5X attenuator and a 50 ohm BNC cable. Adjust generator amplitude for a 5 division display.

r. ADJUST—Trans Resp adjustments (R605, R403, C404, C601, and R1501) for the flattest response in the first 100 ns.

s. Press and release the upper TRIGGER COUPLING button.

t. CHECK—Readout indicates ADJ Δ (step) 2, 10 mV, 100 ns.

u. Connect the fast rise generator and 5X attenuator combination to CH 2 input via a 50 ohm BNC cable.

NOTE

Some compromise may be necessary between step 1 and 2 for the flattest response in the first 100 ns.

v. Press and release the lower TRIGGER COUPLING button to return to step 1.

w. Disconnect the Calibration Generator and connect the Secondary Leveled Sine-Wave Generator head to the CH 1 input via a 10X attenuator.

x. Set the generator for a 6-division display at the reference frequency.

y. Change the generator output frequency to 350 MHz.

z. CHECK—Display amplitude is between 4.4 divisions and 6 divisions while the generator frequency is changed from 350 MHz to 420 MHz. This bandwidth provides optimum performance of the Vertical system.

aa. Press and release the upper TRIGGER COUPLING switch.

bb. Check—Readout indicates ADJ Δ (step) 2, 10 mV, 10 ns.

cc. Connect the Secondary Leveled Sine-Wave Generator head to the CH 2 input via a 10X attenuator. Repeat steps x through aa for CH 2.

dd. Connect the high amplitude generator, Tunnel Diode Pulser, 5X attenuator combination to CH 1 OR X input via a 50 Ohm BNC cable.

NOTE

Check pulser Trigger control is adjusted correctly as described in step f above.

ee. Check—Readout indicates ADJ Δ (step) 3, 10 mV, 10 ns.

ff. ADJUST—Trans Resp adjustments (R411, C403, L403, R417 and the Δ control) for best response if necessary.

gg. Disconnect the Tunnel Diode pulser and connect the fast rise output of the Calibration Generator to CH 1 OR X via a 5X attenuator and a 50 ohm BNC cable. Adjust generator amplitude for a 5 division display. Note the amount of roll up or roll down in the first 3 ns. This difference represents the error between the Tunnel Diode pulser (reference) and the fast rise generator output.

hh. Press and release the upper TRIGGER COUPLING switch (step 4). Move the test signal to CH 2 and ADJUST amplitude for 5 division signal.

ii. ADJUST—Δ until CH 2 waveform best matches that noted in step ff above.

jj. Press and release the upper TRIGGER COUPLING switch (step 5). Connect the test signal to CH 1 through 2X, 2.5X, and 5X attenuators. ADJUST Δ for best front corner.

kk. Press and release the upper TRIGGER COUPLING switch (step 6). Remove 2.5X attenuator. ADJUST Δ for best corner.

NOTE

The 5 mV response should have a 4-5% front corner spike to maintain correct bandwidth.

ll. Press and release the upper TRIGGER COUPLING switch (step 7). Remove 5X attenuator. ADJUST generator for a 5 division signal. ADJUST Δ for best corner.

mm. Press and release the upper TRIGGER COUPLING switch (step 8). Adjust generator for 5 division signal. ADJUST Δ for best corner.

nn. Press and release the upper TRIGGER COUPLING switch (step 9). Adjust high amplitude generator for 5 division signal. ADJUST Δ for a front corner spike of 6 to 7%. This is necessary to have the 10X bandwidth (0.1V - 0.5V) be similar to the 10 mV bandwidth.

NOTE

Generator amplitude for the 500 mV step will be approximately 2 divisions and the amplitude for the 1 V step will be approximately 1 division.

oo. Press and release the upper TRIGGER COUPLING switch (step 10). Remove 2X attenuator. ADJUST Δ for best corner. Continue through cal step 12 as above.

pp. Press and release the upper TRIGGER COUPLING switch. Steps 13 and 14 are automatically calibrated. Connect test signal to CH 2 via 2X, 2.5X, and 5X attenuators and adjust for 5 division signal. ADJUST Δ for best corner.

qq. Repeat steps kk through oo for CH 2 (steps 16–22).

rr. Steps 23 and 24 are automatically calibrated after step 22.

ss. Disconnect the generator from the CH 2 input.

tt. CHECK—Readout indicates VERT CENTER GAIN.

uu. ADJUST —Gain (R638) and Vertical Centering (R639) to align the cursors with the dotted 0% and 100% graticule markings.

vv. Press and release the upper TRIGGER COUPLING switch to conclude the calibration routine.

CAL 07—READOUT CENTERING AND GAIN

7. Check/adjust Readout Centering and Gain (R2918 R2931)

a. Scroll to CAL 07.

b. Press and release the upper TRIGGER COUPLING switch to initiate the routine.

NOTE

The 2465B has stationary 8s in the top row and BWL characters in the bottom row of the readout.

c. CHECK—Readout displays large 8 characters moving in the top line and BWL characters moving in the bottom line.

d. ADJUST—Readout Centering (R2918) and Gain (R2931) so characters remain just inside the graticule area.

e. Press and release the lower TRIGGER COUPLING switch.

CAL 09—PARAMETRIC MEASUREMENTS

NOTE

At the end of this calibration procedure, move the Cal/No-Cal jumper (P501) to the No-Cal position (between pins 1 and 2).

8. Adjust Parametric measurements

NOTE

If CAL 01, 02, and 03 were not performed, the adjustments in this subsection should only be performed if those constants that would have been set in CAL 01, 02 and 03 are known to be correct.

"Limit" messages that appear during this calibration are generally due to A or B Sweeps, A or B Gates, or the measurement PAL, U975.

a. Scroll to CAL 09.

b. Press and release the upper TRIGGER COUPLING button to initiate the routine.

c. CHECK—Readout indicates (step)1, CAL 09, 100 ns.

NOTE

The readout prompts the operator by showing the autocal step number (upper right corner) and Time-Marker Generator setting (lower right corner).

d. Connect the Time-Mark Generator, set for 0.1 μs time markers, to the CH 1 OR X input connector via a 50 ohm BNC cable.

e. Press and release the upper TRIGGER COUPLING button to calibrate the step.

f. CHECK—Readout indicates (step)2, CAL 09, 100 ns.

g. For the remaining steps in Table 5-6, do the following:

1. Set the Time-Marker Generator output for markers corresponding to the Step Number.

Table 5-6
Parametric Measurement Calibration

Autocal Step Readout Display	Time Markers to Apply	Autocal Step Readout Display	Time Markers to Apply
2	0.1 μs	10	50 μs
3	0.2 μs	11	0.1 ms
4	0.5 μs	12	0.2 ms
5	1 μs	13	0.5 ms
6	2 μs	14	1 ms
7	5 μs	15	2 ms
8	10 μs	16	5 ms
9	20 μs	17[a]	0.2 ms

[a]At the conclusion of step 17 calibration, the instrument returns to the Diagnostic readout display. Disconnect the Time-Mark Generator at this time.

2. Press and release the upper TRIGGER COUPLING button to calibrate the step.

h. Steps 18 through 28 are automatically calibrated by the system processor.

i. CHECK—Calibration is concluded and the instrument returns to the Diagnostic menu.

j. Disconnect the Time-Mark generator.

9. Adjust Bandwidth Limit

a. Set:

Vertical

CH 1 POSITION	Midrange
CH 1 MODE	On
CH 2, CH 3, and CH 4 MODE	Off
20 MHz BW LIMIT	On
CH 1 VOLTS/DIV	10 mV
CH 1 VAR	In detent

Input Coupling

CH 1	1 MΩ DC

Horizontal

POSITION	Midrange
X10 MAG	Off
A SEC/DIV	100 ns (knob in)
SEC/DIV VAR	In detent

Trigger

HOLDOFF	MIN (Fully CCW)
LEVEL	Midrange
A/B TRIG	A
SLOPE	+
MODE	AUTO LVL
SOURCE	VERT
COUPLING	DC

b. Connect a fast-rise, positive-going square-wave output via a precision 50-ohm cable, a 50-ohm 10X attenuator, and a 50-ohm termination to the CH 1 input connector.

c. Set the generator to produce a 100-kHz, 5-division display.

d. ADJUST—Coil L644 for as flat a response as possible.

e. Disconnect the test equipment from the instrument.

DC BALANCE, AND X-Y PHASE DIFFERENTIAL ADJUSTMENTS

Equipment Required (see Table 4-1)	50 Ω BNC Cable (Item 10)
Primary Leveled-Sine wave Generator (Item 2)	5X Attenuator (Item 17)
Calibration Generator (Item 3)	Alignment Tool (Item 20)

See **ADJUSTMENT LOCATIONS 1** *and* **ADJUSTMENT LOCATIONS 4**

at the back of this manual for test point and adjustment locations.

Initial Control Settings.

Control settings not listed do not affect the procedure.

VERTICAL VOLTS/DIV

CH 1 and CH 2	10 mV
CH 1 VAR	CCW (out of detent)
CH 2 VAR	In detent

Input Coupling

CH 1 and CH 2	50 Ω DC

VERTICAL Mode

CH 1	On
CH 2, CH 3, CH 4	Off
ADD, INVERT, and BW LIMIT	Off
ALT/CHOP	ALT

VERTICAL POSITION

CH 1	Midrange

Horizontal

A SEC/DIV	1 ms
SEC/DIV VAR	In detent
POSITION	Midrange

TRIGGER

MODE	AUTO LVL
SOURCE	VERT
COUPLING	DC
SLOPE	+ (plus)
LEVEL	Midrange
HOLDOFF	Minimum

Delta

ΔV	On (RATIO readout)
TRACKING/INDEP	INDEP
Δ REF OR DLY POS and Δ	Cursors near the 3rd line above and 3rd line below graticule center (6 division spacing)
INTENSITY	Left of center
READOUT INTENSITY	Right of center
SCALE ILLUM	Fully CCW
FOCUS	Best focused display

1. Check/Adjust Readout Jitter (R805 and R618).

a. Rotate the Δ REF OR DLY POS control CCW until the RATIO readout is constant.

b. Rotate the Δ control until the readout display indicates 130.0%.

c. CHECK—One cursor is near the bottom horizontal graticule line and the other is near dotted graticule line marked 100(%).

d. Rotate the Δ REF OR DLY POS control until the readout displays exactly 100.0%. The cursors should now be on or near the dotted graticule lines marked 0% and 100(%).

e. Set the CH 1 VOLTS/DIV VAR to the detent position.

NOTE

Care must be taken not to disturb the position of the controls adjusted in parts b through e during the balance of this procedure. If they are accidentally moved, repeat the procedure from the beginning.

f. Connect a 1 kHz, fast-rise signal from the Calibration Generator to the CH 1 OR X input connector via a 50 Ω BNC cable and 5X attenuator.

g. Set the generator output level for an 8-division display.

h. Use the CH1 Vertical and the Horizontal POSITION controls to center the CH 1 display on the graticule.

i. ADJUST—Vertical Readout Jitter (R618) for minimum vertical jitter of the readout characters and cursors.

j. ADJUST—Gain (R638) and Centering (R639) to align cursors with the 0 and 100% graticule markings.

k. Disconnect the 1 kHz signal.

l. Press the Δt button to obtain a Δt cursor display.

m. Using the ΔREF OR DLY POS and Δ controls, position the cursors to the 2nd and 10th graticule lines.

n. X10 MAG on.

o. ADJUST—Horizontal Readout Jitter (R805) for minimum horizontal jitter of the readout characters and cursors.

p. Set X10 MAG off.

2. Set CH 1 and CH 2 DC Balance.

NOTE

The instrument must have had a 20-minute warmup prior to performing the next step to ensure accuracy.

a. Press and hold momentarily and release the CH 1 and CH 2 upper Input Coupling switches simultaneously.

b. CHECK—The display reads DC BALANCE IN PROGRESS for approximately 10 seconds, then the display returns to normal.

c. CHECK—For less than 0.2-division + 0.5 mV vertical trace shift when the CH 1 VOLTS/DIV switch is rotated through all of its settings.

d. Set the VERTICAL MODE switches to disable CH 1 and display CH 2.

e. CHECK—For less than 0.2-division + 0.5 mV vertical trace shift when the CH 2 VOLTS/DIV switch is rotated through all of its settings.

3. Adjust X-Y Phasing (C118).

a. Set:

CH 1 VOLTS/DIV	50 mV
Input Coupling	50 Ω DC
A SEC/DIV	X-Y
CH 1 VERTICAL MODE	On
CH 2, CH 3, CH 4 VERTICAL MODE	Off

b. Connect the Primary Leveled Sine-Wave Generator to the CH 1 OR X input connector via a 50 Ω BNC cable.

c. Set the generator frequency to 1 MHz and adjust the amplitude for a 6-division vertical signal display.

d. Use the CH 1 POSITION control to vertically center the display on the graticule.

e. ADJUST—X-Y Phasing (C118) for no opening in the ellipse.

f. Set the generator frequency to 2 MHz and adjust the amplitude for a 6-division vertical signal display.

g. CHECK—Horizontal opening in the ellipse is 0.3 division or less, measured at the center horizontal graticule line.

i. Disconnect the test setup.

MAINTENANCE

This section of the manual contains information for conducting preventive maintenance, troubleshooting, and corrective maintenance on the instruments.

STATIC-SENSITIVE COMPONENTS

The following precautions are applicable when performing any maintenance involving internal access to the instrument.

CAUTION

Static discharge can damage any semiconductor component in this instrument.

This instrument contains electrical components that are susceptible to damage from static discharge. Table 6-1 lists the relative susceptibility of various classes of semiconductors. Static voltages of 1 kV to 30 kV are common in unprotected environments.

When performing maintenance, observe the following precautions to avoid component damage:

1. Minimize handling of static-sensitive components.

2. Transport and store static-sensitive components or assemblies in their original containers or on a metal rail. Label any package that contains static-sensitive components or assemblies.

3. Discharge the static voltage from your body by wearing a grounded antistatic wrist strap while handling these components. Servicing static-sensitive components or assemblies should be performed only at a static-free work station by qualified service personnel.

Table 6-1
Susceptibility to Static Discharge Damage

Semiconductor Classes	Relative Susceptibility Levels[a]
MOS or CMOS microcircuits or discretes, or linear microcircuits with MOS inputs. (Most Sensitive)	1
ECL	2
Schottky signal diodes	3
Schottky TTL	4
High-frequency bipolar transistors	5
JFETs	6
Linear microcircuits	7
Low-power Schottky TTL	8
TTL (Least Sensitive)	9

[a]Voltage equivalent for levels: (Voltage discharged from a 100 pF capacitor through a resistance of 100 Ω).

1 = 100 to 500 V	**4 = 500 V**	**7 = 400 to 1000 V (est.)**
2 = 200 to 500 V	**5 = 400 to 600 V**	**8 = 900 V**
3 = 250 V	**6 = 600 to 800 V**	**9 = 1200 V**

4. Nothing capable of generating or holding a static charge should be allowed on the work station surface.

5. Keep the component leads shorted together whenever possible.

6. Pick up components by their bodies, never by their leads.

7. Do not slide the components over any surface.

8. Avoid handling components in areas that have a floor or work-surface covering capable of generating a static charge.

9. Use a soldering iron that is connected to earth ground.

10. Use only approved antistatic, vacuum-type desoldering tools for component removal.

PREVENTIVE MAINTENANCE

INTRODUCTION

Preventive maintenance consists of cleaning, visual inspection, and checking instrument performance. When accomplished regularly, it may prevent instrument malfunction and enhance instrument reliability. The severity of the environment in which the instrument is used determines the required frequency of maintenance. An appropriate time to accomplish preventive maintenance is just before instrument adjustment.

GENERAL CARE

The cabinet minimizes accumulation of dust inside the instrument and should normally be in place when operating the instrument. The front cover supplied with the instrument provides both dust and damage protection for the front panel and CRT, and it should be on whenever the instrument is stored or is being transported.

INSPECTION AND CLEANING

The instrument should be visually inspected and cleaned as often as operating conditions require. Accumulation of dirt in the instrument can cause overheating and component breakdown. Dirt on components acts as an insulating blanket, preventing efficient heat dissipation. It also provides an electrical conduction path that could result in instrument failure, especially under high-humidity conditions.

CAUTION

Avoid the use of chemical cleaning agents which might damage the plastics used in this instrument. Use a nonresidue-type cleaner, preferably isopropyl alcohol or a solution of 1% mild detergent with 99% water. Before using any other type of cleaner, consult your Tektronix Service Center or representative.

Exterior

INSPECTION. Inspect the external portions of the instrument for damage, wear, and missing parts; use Table 6-2 as a guide. Instruments that appear to have been dropped or otherwise abused should be checked thoroughly to verify correct operation and performance.

Table 6-2
External Inspection Check List

Item	Inspect For	Repair Action
Cabinet, Lid, Front Panel	Cracks, scratches, deformations, damaged hardware or gaskets.	Touch up paint scratches and replace defective components.
Front-Panel Controls	Missing, damaged, or loose knobs, buttons, and controls.	Repair or replace missing or defective items.
Connectors	Broken shells, cracked insulation, and deformed contacts. Dirt in connectors.	Replace defective parts, Clear or wash out dirt.
Carrying Handle	Correct operation.	Replace defective parts.
Accessories	Missing items or parts of items, bent pins, broken or frayed cables, and damaged connectors.	Replace damaged or missing items, frayed cables, and defective parts.

Deficiencies found that could cause personal injury or could lead to further damage to the instrument should be repaired immediately.

CAUTION

To prevent getting moisture inside the instrument during external cleaning, use only enough liquid to dampen the cloth or applicator.

CLEANING. Loose dust on the outside of the instrument can be removed with a soft cloth or small soft-bristle brush. The brush is particularly useful for dislodging dirt on and around the controls and connectors. Dirt that remains can be removed with a soft cloth dampened in a mild detergent and water solution. Do not use abrasive cleaners.

Two plastic light filters, one blue and one clear, are provided with the oscilloscope. Clean the light filters and the CRT face with a soft lint-free cloth dampened with either isopropyl alcohol or a mild detergent and water solution.

Interior

To gain access to internal portions of the instrument for inspection and cleaning, refer to the "Removal and Replacement Instructions" in the "Corrective Maintenance" part of this section.

INSPECTION. Inspect the internal portions of the instrument for damage and wear, using Table 6-3 as a guide. Deficiencies found should be repaired immediately. The corrective procedure for most visible defects is obvious; however, particular care must be taken if heat-damaged components are found. Overheating usually indicates other trouble in the instrument; therefore, it is important that the cause of overheating be corrected to prevent recurrence of the damage.

If any electrical component is replaced, conduct a Performance Check for the affected circuit and for other closely related circuits (see Section 4). If repair or replacement work is done on any of the power supplies, conduct a complete Performance Check and, if so indicated, an instrument readjustment (see Sections 4 and 5).

Table 6-3
Internal Inspection Check List

Item	Inspect For	Repair Action
Circuit Boards	Loose, broken, or corroded solder connections. Burned circuit boards. Burned, broken, or cracked circuit-run plating.	Clean solder corrosion with an eraser and flush with isopropyl alcohol. Resolder defective connections. Determine cause of burned items and repair. Repair defective circuit runs.
Resistors	Burned, cracked, broken, blistered.	Replace defective resistors. Check for cause of burned component and repair as necessary.
Solder Connections	Cold solder or rosen joints.	Resolder joint and clean with isopropyl alcohol.
Capacitors	Damaged or leaking cases. Corroded solder on leads or terminals.	Replace defective capacitors. Clean solder connections and flush with isopropyl alcohol.
Semiconductors	Loosely inserted in sockets. Distorted pins.	Firmly seat loose semiconductors. Remove devices having distorted pins. Carefully straighten pins (as required to fit the socket), using long-nose pliers, and reinsert firmly. Ensure that straightening action does not crack pins, causing them to break off.
Wiring and Cables	Loose plugs or connectors. Burned, broken, or frayed wiring.	Firmly seat connectors. Repair or replace defective wires or cables.
Chassis	Dents, deformations, and damaged hardware.	Straighten, repair, or replace defective hardware.

CAUTION

To prevent damage from electrical arcing, ensure that circuit boards and components are dry before applying power to the instrument.

CLEANING. To clean the interior, blow off dust with dry, low-pressure air (approximately 9 psi). Remove any remaining dust with a soft brush or a cloth dampened with a solution of mild detergent and water. A cotton-tipped applicator is useful for cleaning in narrow spaces and on circuit boards.

If these methods do not remove all the dust or dirt, the instrument may be spray washed using a solution of 5% mild detergent and 95% water as follows:

CAUTION

Exceptions to the following procedure are the Attenuator assemblies. Clean these assemblies only with isopropyl alcohol as described in step 4.

1. Gain access to the parts to be cleaned by removing easily accessible shields and panels.

2. Spray wash dirty parts with the detergent-and-water solution; then use clean water to thoroughly rinse them.

3. Dry all parts with low-pressure air.

NOTE

Most of the switches used in the instrument are sealed and the contacts are inaccessible. If cleaning is deemed necessary, use only isopropyl alcohol.

4. Clean switches with isopropyl alcohol and wait 60 seconds for the majority of the alcohol to evaporate. Then complete drying with low-pressure air.

5. Dry all components and assemblies in an oven or drying compartment using low-temperature (125°F to 150°F) circulating air.

LUBRICATION

There is no periodic lubrication required for this instrument.

SEMICONDUCTOR CHECKS

Periodic checks of the transistors and other semiconductors in the oscilloscope are not recommended. The best check of semiconductor performance is actual operation in the instrument.

PERIODIC READJUSTMENT

To ensure accurate measurements, check the performance of this instrument every 2000 hours of operation, or if used infrequently, once each year. In addition, replacement of components may necessitate readjustment of the affected circuits.

Complete Performance Check and Adjustment instructions are given in Sections 4 and 5. The Performance Check Procedure can also be helpful in localizing certain troubles in the instrument.

TROUBLESHOOTING

INTRODUCTION

Preventive maintenance performed on a regular basis should reveal most potential problems before an instrument malfunctions. However, should troubleshooting be required, the following information is provided to facilitate location of a fault. In addition, the material presented in the "Theory of Operation" and "Diagrams" sections of this manual may be helpful while troubleshooting.

TROUBLESHOOTING AIDS

Diagnostic Firmware

The operating firmware in this instrument contains diagnostic routines that aid in locating malfunctions. When instrument power is applied, power-up tests are performed to verify proper operation of much of the instrument's circuitry. If a failure is detected, this information is passed on to the operator in the form of either a CRT readout or illuminated LED indicators. The failure information directs the operator to the failing block of circuitry. If the failure is such that the processor can still execute the diagnostic routines, the user can call up specific tests to further check the failing circuitry. The specific diagnostic routines are explained later in this section.

Schematic Diagrams

Complete schematic diagrams are located on tabbed foldout pages in the "Diagrams" section. Portions of circuitry mounted on each circuit board are enclosed by heavy black lines. The assembly number and name of the circuit are shown near either the top or the bottom edge of the diagram.

Functional blocks on schematic diagrams are outlined with a wide grey line. Components within the outlined area perform the function designated by the block label. The "Theory of Operation" uses these functional block names when describing circuit operation as an aid in cross-referencing between the theory and the schematic diagrams.

Component numbers and electrical values of components in this instrument are shown on the schematic diagrams. Refer to the first page of the "Diagrams" section for the reference designators and symbols used to identify components. Important voltages and waveform reference numbers (enclosed in hexagonal-shaped boxes) are also shown on each diagram. Waveform illustrations are located adjacent to their respective schematic diagram.

Circuit Board Illustrations

Circuit board illustrations showing the physical location of each component are provided for use in conjunction with each schematic diagram. Each board illustration is found in the "Diagrams" section on the back of a foldout page, preceding the first schematic diagram(s) to which it relates.

The locations of waveform test points are marked on the circuit board illustrations with hexagonal outlined numbers corresponding to the waveform numbers on both the schematic diagram and the waveform illustrations.

Circuit Board Locations

The placement in the instrument of each circuit board is shown in a board locator illustration. This illustration is located on the foldout page along with the circuit board illustration.

Power Distribution Diagrams

Power Distribution diagrams (diagrams 11 and 12) are provided in the "Diagrams" section to aid in troubleshooting power-supply problems.

Circuit Board Interconnection Diagram

A circuit board interconnection diagram (diagram 13) and tables listing the interconnecting pins and signals carried are provided in the "Diagrams" section following the Power Distribution diagrams.

Grid Coordinate System

Each schematic diagram and circuit board illustration has a grid border along its left and top edges. A table located adjacent to each diagram lists the grid coordinates

of each component shown on that diagram. To aid in physically locating components on the circuit board, this table also lists the grid coordinates of each component on the circuit board illustration.

Near each circuit board illustration is an alphanumeric listing of all components mounted on that board. The second column in each listing identifies the schematic diagram on which each component can be found. These component-locator tables are especially useful when more than one schematic diagram is associated with a particular circuit board.

Troubleshooting Charts

The troubleshooting charts contained in the "Diagrams" section are to be used as an aid in locating malfunctioning circuitry. To use the charts, begin with the Preliminary Tests flowchart. This chart will help identify problem areas and will direct you to other appropriate charts for further troubleshooting.

Some malfunctions, especially those involving multiple simultaneous failures, may require more elaborate trouble shooting approaches with references to circuit descriptions in the "Theory of Operation" section of this manual.

Component Color Coding

Information regarding color codes and markings of resistors and capacitors is located on the color-coding illustration (Figure 9-1) at the beginning of the "Diagrams" section.

RESISTOR COLOR CODE. Resistors used in this instrument are carbon-film, composition, or precision metal-film types. They are usually color coded with the EIA color code; however, some metal-film type resistors may have the value printed on the body. The color code is interpreted starting with the stripe nearest to one end of the resistor. Composition resistors have four stripes; these represent two significant digits, a multiplier, and a tolerance value. Metal-film resistors have five stripes representing three significant digits, a multiplier, and a tolerance value.

CAPACITOR MARKINGS. Capacitance values of common disc capacitors and small electrolytics are marked on the side of the capacitor body. White ceramic capacitors are color coded in picofarads, using a modified EIA code.

Dipped tantalum capacitors are color coded in microfarads. The color dot indicates both the positive lead and the voltage rating. Since these capacitors are easily destroyed by reversed or excessive voltage, be careful to observe the polarity and voltage rating when replacing them.

DIODE COLOR CODE. The cathode end of each glass-encased diode is indicated by either a stripe, a series of stripes or a dot. For most diodes marked with a series of stripes, the color combination of the stripes identifies three digits of the Tektronix Part Number, using the resistor color-code system. The cathode and anode ends of a metal-encased diode may be identified by the diode symbol marked on its body.

Semiconductor Lead Configurations

Figure 9-2 in the "Diagrams" section shows the lead configurations for semiconductor devices used in the instrument. These lead configurations and case styles are typical of those used at completion of the instrument design. Vendor changes and performance improvement changes may result in changes of case styles or lead configurations. If the device in question does not appear to match the configuration shown in Figure 9-2, examine the associated circuitry or consult a manufacturer's data sheet.

Multipin Connectors

Multipin connector orientation is indexed by a triangle on the cable connector and a 1 or triangle on the circuit board. Slot numbers may be molded into the connector. When a connection is made to circuit board pins or header, ensure that the index on the connector is aligned with the index on the circuit board (see Figure 6-1). Cable connectors can be removed by inserting a screw driver into the center slot of its header.

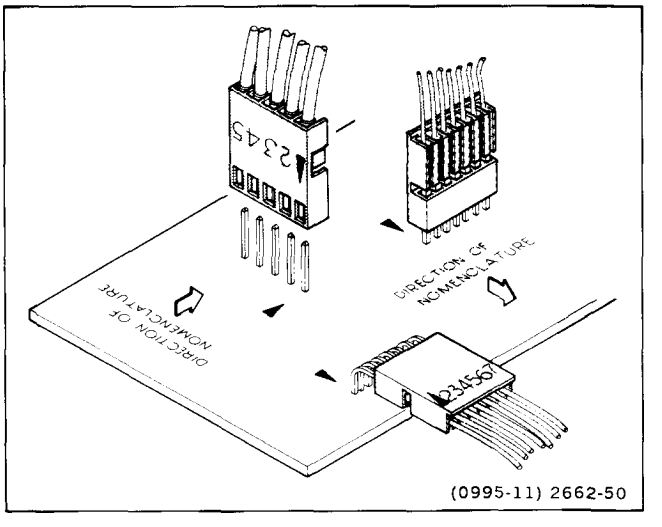

Figure 6-1. Multipin connector orientation.

TROUBLESHOOTING EQUIPMENT

The equipment listed in Table 4-1 of this manual, or equivalent equipment, may be useful when troubleshooting this instrument.

TROUBLESHOOTING TECHNIQUES

The following procedure is arranged in an order that enables checking simple trouble possibilities before requiring more extensive troubleshooting. The first two steps use diagnostic aids inherent in the instrument's operating firmware and will locate many circuit faults. The next four procedures are check steps that ensure proper control settings, connections, operation, and adjustment. If the trouble is not located by these checks, the remaining steps will aid in locating the defective component. When the defective component is located, replace it using the appropriate replacement procedure given under "Corrective Maintenance" in this section.

CAUTION

Before using any test equipment to make measurements on static-sensitive, current-sensitive, or voltage-sensitive components or assemblies, ensure that any voltage or current supplied by the test equipment does not exceed the limits of the component to be tested.

1. Power-up Tests

The instrument performs automatic verification of much of the instrument's circuitry when power is first applied. The Kernel tests verify proper operation of the Microprocessor, the ROM, and the RAM. If all Kernel tests pass, a second level of checks, the Confidence tests, are performed. The Confidence tests, when passed, give the user a high degree of assurance that the instrument is functioning properly.

If a Kernel test or Confidence test fails, the area of failure is identified either by a message on the CRT (if the instrument is able to produce a display) or by an error code displayed on the front-panel LED indicators. If a failure occurs, refer to the "Diagnostic Routines" discussion later in this section for definitions of error messages and LED error codes.

Once a problem area has been identified, the associated troubleshooting procedure should be performed to further isolate the problem. The troubleshooting procedures are located on tabbed-foldout pages in the "Diagrams" section at the rear of this manual.

2. Diagnostic Test and Exerciser Routines

Each of the tests automatically performed at power-up, along with several other circuit exercising routines, may be individually selected by the user to further clarify the nature of a suspected failure. The desired test or exerciser is selected by scrolling through a menu of the available routines when under control of the Diagnostic Monitor. Entry into the Diagnostic Monitor and its uses are explained in the "Diagnostic Routines" discussion later in this section.

3. Check Control Settings

Incorrect control settings can give a false indication of instrument malfunction. If there is any question about the correct function or operation of any control, refer to either the "Operating Information" in Section 2 of this manual or to the Operators Manual.

4. Check Associated Equipment

Before proceeding, ensure that any equipment used with the instrument is operating correctly. Verify that input signals are properly connected and that the interconnecting cables are not defective. Check that the ac-power-source voltage to all equipment is correct.

5. Visual Check

Perform a visual inspection. This check may reveal broken connections or wires, damaged components, semiconductors not firmly mounted, damaged circuit boards, or other clues to the cause of an instrument malfunction.

6. Check Instrument Performance and Adjustment

Check the performance of either those circuits where trouble appears to exist or the entire instrument. The apparent trouble may be the result of misadjustment. Complete performance check and adjustment instructions are given in Sections 4 and 5 of this manual.

7. Isolate Trouble to a Circuit

To isolate problems to a particular area, use any symptoms noticed to help locate the trouble. Refer to the troubleshooting charts in the "Diagrams" section as an aid in locating a faulty circuit.

When trouble symptoms appear in more than one circuit, first check the power supplies; then check the affected circuits by taking voltage and waveform readings. Check first for the correct output voltage of each individual supply. These voltages are measured between the power supply test points and ground (see schematic diagrams 8, 9, and 10, and associated circuit board illustrations in the "Diagrams" section). If the power-supply voltages and ripple are within the listed ranges, the supply can be assumed to be working correctly. If they are outside the range, the supply may be either misadjusted or operating incorrectly.

The Low Voltage Power Supply levels are interdependent. All the low voltage supplies use the +10 V reference for their reference levels. If more than one of the low voltage supplies appears defective, repair them in the following order: +10 V REF, +5 V Digital, +87 V, +42 V, +15 V, +5 V Analog, −15 V, −8 V, and −5 V.

A defective component elsewhere in the instrument can create the appearance of a power-supply problem and may also affect the operation of other circuits. Use the power supply troubleshooting charts to aid in locating the problem.

8. Check Circuit Board Interconnections

After the trouble has been isolated to a particular circuit, again check for loose or broken connections, improperly seated semiconductors, and heat-damaged components.

9. Check Voltages and Waveforms

Often the defective component can be located by checking circuit voltages or waveforms. Typical voltages are listed on the schematic diagrams. Waveforms indicated on the schematic diagrams by hexagonal-outlined numbers are shown adjacent to the diagrams. Waveform test points are shown on the circuit board illustrations.

NOTE

Voltages and waveforms indicated on the schematic diagrams are not absolute and may vary slightly between instruments. To establish operating conditions similar to those used to obtain these readings, see the voltage and waveform setup conditions preceding the waveform illustrations.

Note the recommended test equipment, front-panel control settings, voltage and waveform conditions, and cable-connection instructions. Any special control settings required to obtain a given waveform are noted under the waveform illustration. Changes to the control settings from the initial setup, other than those noted, are not required.

10. Check Individual Components

The following procedures describe methods of checking individual components. Two-lead components that are soldered in place are most accurately checked by first disconnecting one end from the circuit board. This isolates the measurement from the effects of the surrounding circuitry. See Figure 9-1 for component value identification and Figure 9-2 for semiconductor lead configurations.

WARNING

To avoid electric shock, always disconnect the instrument from the ac power source before removing or replacing components.

CAUTION

When checking semiconductors, observe the static-sensitivity precautions located at the beginning of this section.

TRANSISTORS. A good check of a transistor is actual performance under operating conditions. A transistor can most effectively be checked by substituting a known-good component. However, be sure that circuit conditions are not such that a replacement transistor might also be damaged. If substitute transistors are not available, use a dynamic-type transistor checker for testing. Static-type transistor checkers are not recommended, since they do not check operation under simulated operating conditions.

When troubleshooting transistors in the circuit with a voltmeter, measure both the emitter-to-base and emitter-to-collector voltages to determine whether they are consistent with normal circuit voltages. Voltages across a transistor may vary with the type of device and its circuit function.

Some of these voltages are predictable. The emitter-to-base voltage for a conducting silicon transistor will normally range from 0.6 V to 0.8 V. The emitter-to-collector voltage for a saturated transistor is about 0.2 V. Because these values are small, the best way to check them is by

connecting a sensitive voltmeter across the junction rather than comparing two voltages taken with respect to ground. If the former method is used, both leads of the voltmeter must be isolated from ground.

If voltage values measured are less that those just given, either the device is shorted or no current is flowing in the external circuit. If values exceed the emitter-to-base values given, either the junction is reverse biased or the device is defective. Voltages exceeding those given for typical emitter-to-collector values could indicate either a nonsaturated device operating normally or a defective (open-circuited) transistor. If the device is conducting, voltage will be developed across the resistors in series with it; if open, no voltage will be developed across the resistors unless current is being supplied by a parallel path.

CAUTION

When checking emitter-to-base junctions, do not use an ohmmeter range that has a high internal current. High current may damage the transistor. Reverse biasing the emitter-to-base junction with a high current may degrade the current-transfer ratio (Beta) of the transistor.

A transistor emitter-to-base junction also can be checked for an open or shorted condition by measuring the resistance between terminals with an ohmmeter set to a range having a low internal source current, such as the R × 1 kΩ range. The junction resistance should be very high in one direction and much lower when the meter leads are reversed.

When troubleshooting a field-effect transistor (FET), the voltage across its elements can be checked in the same manner as previously described for other transistors. However, remember that in the normal depletion mode of operation, the gate-to-source junction is reverse biased; in the enhanced mode, the junction is forward biased.

INTEGRATED CIRCUITS. An integrated circuit (IC) can be checked with a voltmeter, test oscilloscope, or by direct substitution. A good understanding of circuit operation is essential when troubleshooting a circuit having IC components. Use care when checking voltages and waveforms around the IC so that adjacent leads are not shorted together. An IC test clip provides a convenient means of clipping a test probe to an IC.

HYBRIDS. Hybrid components can best be checked by observing voltages and waveforms on the circuit board. Measurements should not be made on any hybrid component while out of the circuit as they may easily be damaged. Direct substitution is the best troubleshooting method when a hybrid failure is suspected. The CH 1 and CH 2 hybrids are matched, and should be replaced as a matched pair.

CAUTION

When checking a diode, do not use an ohmmeter scale that has a high internal current. High current may damage a diode. Checks on diodes can be performed in much the same manner as those on transistor emitter-to-base junctions. Do not check tunnel diodes or back diodes with an ohmmeter; use a dynamic tester, such as the TEKTRONIX 576 Curve Tracer.

DIODES. A diode can be checked for either an open or a shorted condition by measuring the resistance between terminals with an ohmmeter set to a range having a low internal source current, such as the R × 1 kΩ range. The diode resistance should be very high in one direction and much lower when the meter leads are reversed.

Silicon diodes should have 0.6 to 0.8 V across their junctions when conducting. Higher readings indicate that they are either reverse biased or defective, depending on polarity.

Light Emitting Diodes (LEDs) should have 1.5 to 2.2 V, depending on their current and color, across their junctions when conducting. Higher readings usually indicate the diodes are open, especially if they are not illuminated (ON).

RESISTORS. Check resistors with an ohmmeter. Refer to the "Replaceable Electrical Parts" list for the tolerances of resistors used in this instrument. A resistor normally does not require replacement unless its measured value varies widely from its specified value and tolerance.

INDUCTORS. Check for open inductors by checking continuity with an ohmmeter. Shorted or partially shorted inductors can usually be found by checking the waveform response when high-frequency signals are passed through the circuit.

CAPACITORS. A leaky or shorted capacitor can best be detected by checking resistance with an ohmmeter set to one of the highest ranges. Do not exceed the voltage rating of the capacitor. The resistance reading should be high after the capacitor is charged to the output voltage of

the ohmmeter. An open capacitor can be detected with a capacitance meter or by checking whether the capacitor passes ac signals.

ATTENUATORS. The Attenuators are built as complete assemblies and should not be taken apart. If an Attenuator is suspected as having failed, direct substitution is the recommended troubleshooting method.

11. Repair and Adjust the Circuit

If any defective parts are located, follow the replacement procedures given under "Corrective Maintenance" in this section. After any electrical component has been replaced, the performance of that circuit and any other closely related circuit should be checked. Since the power supplies affect all circuits, performance of the entire instrument should be checked if work has been done on the power supplies or if the power transformer has been replaced. Readjustment of the affected circuitry may be necessary. Refer to the "Performance Check" and "Adjustment Procedure", Sections 4 and 5 of this manual.

DIAGNOSTIC ROUTINES

The diagnostic routines contained in the instrument operating firmware consist of the various power-up tests that are automatically performed when power is first applied and several circuit exerciser routines. The test or exerciser routines are selected by scrolling through a menu of available routines when the firmware is under control of the Diagnostic Monitor. Monitor control is indicated by the message "DIAGNSTIC. PUSH A/B TRIG TO EXIT" displayed in the top CRT graticule division.

Entry into the monitor is automatic if a power-up test fails. The user may also force entry into the Diagnostic Monitor from the normal operating mode by holding in the front-panel ΔV and Δt push buttons and then pressing the front-panel SLOPE push button. Exiting the monitor is accomplished by pressing in the A/B TRIG push button, as instructed by the CRT readout display.

Depending on how the Diagnostic Monitor was entered (from normal mode or as a result of a power-up test failure), the first menu item displayed may vary; entry into the monitor from the normal mode begins at ALL TESTS while entry from power-up starts at the first failed test. Since, in a failure mode, the CRT readout may not be able to display the selected menu item, the VERT TRIGGER SOURCE indicator illuminates as a reference when ALL TESTS is selected. With the VERT TRIGGER SOURCE indicator illuminated, the user may scroll to the desired test or exerciser routine using the test order called out in Table 6-4 or Table 6-5 respectively. Whether the menu is displayed or not, scrolling is accomplished by pressing either the front-panel upper TRIGGER MODE switch to increment or the lower TRIGGER MODE switch to decrement the menu position by one.

Table 6-4
Sequence of Diagnostic Tests

Routine Type	Type Number	Lit LED	Routine Name	Error Code	Error Code Meaning
All Tests[a]	00	VERT	All	ZZ	The left digit is the option number and the right digit is the test number of the first failing test of the last ALL TESTS run. When looping, it shows the last failing test.
Test	00		Kernel Test	ZZ	Left digit is option number and right digit is device number. See Table 6-6 for main box kernel test failure codes.[d]
Test	01	CH 1	Interrupt Request	01	Interrupt request is missing or has wrong period.
Test	02	CH 2	Switch Stuck	01	Trigger COUPLING lower.
				02	Trigger COUPLING upper.
				03	MEASURE/HELP
				04	CH 1 Coupling lower.
				05	CH 1 Coupling upper.
				14	CH 4 VOLTS/DIV
				12	CH 3 VOLTS/DIV
				13	INIT@50%
				14	CH 2 Coupling lower.
				15	CH 2 Coupling upper.
				25	CH 2 INVERT
				31	CH 1 VERTICAL MODE
				32	CH 2 VERTICAL MODE
				33	ADD VERTICAL MODE
				34	CH 3 VERTICAL MODE
				35	CH 4 VERTICAL MODE
				41	STEP/AUTO
				42	SAVE HELP
				43	RECALL HELP
				44	CHOP/ALT VERTICAL MODE
				45	20 MHz BW LIMIT
				51	X10 MAG
				52	TRACK/INDEP
				53	Δt (delta time).
				54	ΔV (delta volts).
				55	Trigger SLOPE
				61	Trigger SOURCE lower.
				62	Trigger SOURCE upper.
				63	Trigger MODE lower.
				64	Trigger MODE upper.
				65[b]	A/B TRIG select.
Test	03	CH 3	Readout Board	01	Shift register failure.[c](− Trigger LED).
				02	Readout RAM failure[c] (+ Trigger LED).

[a]VERT TRIG SOURCE indicator lights when in ALL TESTS as a visual reference in the event a CRT display can not be produced.

[b]If the A/B TRIG switch is stuck during power-up, the oscilloscope will branch to "normal" operation after a short delay. The associated error message will only be visible momentarily if the CRT is warmed-up.

[c]Readout Board error codes are also displayed on the + and − Trigger SLOPE LEDs.

[d]This test is not user-selectable but is run automatically during cycle mode.

Table 6-4 (cont)

Routine Type	Type Number	Lit LED	Routine Name	Error Code	Error Code Meaning
Test	04	CH 4	Calibration Data	X1	Parity error on read (bit 0 set).
				X2	Out of limits (bit 1 set).
				1X	Bad checksum (bit 4 set).
Test	05	ADD	Main Board	01	AUTO LVL failed to trigger.
				X2	Negative level not negative enough.
				X4	Negative level too negative.
				2X	Positive level not positive enough.
				4X	Positive level too positive.
Test	06	INVERT	RAM Battery	01	Battery voltage too low.
				02	Battery voltage too high.

[a]VERT TRIG SOURCE indicator lights when in ALL TESTS as a visual reference in the event a CRT display can not be produced.

[b]If the A/B TRIG switch is stuck during power-up, the oscilloscope will branch to "normal" operation after a short delay. The associated

[c]Readout Board error codes are also displayed on the + and − Trigger

[d]This test is not user-selectable but is run automatically during cycle mode.

Routine Control

When the desired Test or Exerciser has been selected, the operator has two types of control that may be exercised over the routine: START/STOP and LOOP.

Starting or stopping the execution of the selected routine is controlled by the front-panel TRIGGER COUPLING switches. Pressing the upper switch starts the routine; pressing the lower switch stops it.

All of the test routines may be set to LOOP mode (continuously repeated) by pressing the front-panel upper TRIGGER SOURCE switch while the routine is selected but not executing. The LOOP feature will cause the routine to be continuously repeated once started until stopped when the operator presses the lower TRIGGER COUPLING switch. Once the routine is stopped, the LOOP feature may be disabled by pressing the lower TRIGGER SOURCE switch.

While a Test or Exerciser routine is executing, the Diagnostic Monitor Control message on the top line of the CRT display will be cleared as an indication that a routine is running. When test routines are looping, the message "LOOP" is displayed in the bottom division of the CRT graticule.

Display Format

The Tests and Exercisers routines display information about the routine type and number, as well as any test results, at the bottom of the CRT display. The readout line is formatted as follows:

OD TYPE XY STATUS ZZ LOOP OD<ABCC>

The information is defined as follows:

"OD" is a two-character option designator identifying the option that this particular line of diagnostic information refers to (see Options manual for details). For the basic instrument, the OD location is blank.

"TYPE" refers to routine type: All Tests (ALL), Test (TEST), Exerciser (EXER), or Calibration (CAL).

"X" indicates which bit of the "Option Select Register" is set to turn on the option called out by "OD" (see Options manual for description of Options Select Register). This bit is zero for the basic instrument.

"Y" is the TYPE number of the routine (see the "Type Number" column of Table 6-4).

"STATUS" shows the results of the last time a selected test routine ran: either PASS or FAIL. This space is blank for exerciser and calibration routines. When the diagnostics are called up from normal operating mode, the space will be blank until the selected test is executed.

"ZZ" is a two-digit error code identifying the nature of the failure in a failed test (see the "Error Code" column of Table 6-4).

"LOOP" indicates when a selected test is set to the LOOP mode.

"OD<ABCC>" is the CYCLE mode failure indicator. CYCLE mode, when entered by removing the NO CAL/CAL jumper (P501) before turning the instrument on, causes the instrument to continuously LOOP through the Power Up Diagnostic Tests. If a failure occurs, the cycle-failure data, identifying the first failure encountered, is written to RAM. Thereafter, at each power-up, the Diagnostic Monitor is automatically entered, and the failure data is displayed. The failure data must be cleared from the RAM location to eliminate the CYCLE mode failure display (see CYCLE ERROR CLEAR Exerciser 03). The information displayed is an abbreviated version of the previous items:

"OD" is a two-character option designator showing which option failed first while in the CYCLE mode (the same codes as for "OD" at the start of the readout line).

"A" identifies the option-select bit for the failing option (the same code as for "X").

"B" is the test Type Number where the failure occurred (the same codes as for "Y").

"CC" is the error code for the test (the same codes as for "ZZ").

Kernel Tests

The Kernel tests are those tests which, when failed, are considered "fatal" to the operation of the Microprocessor. Failure of a Kernel test will cause the front-panel TRIG'D indicator to flash, and certain of the other front-panel indicators will be illuminated with an error code. The code points to the area of failure as indicated in Table 6-6. Tables 6-7 and 6-8 are used to determine the option and device numbers used in Table 6-6. Only the basic instrument codes are given in Table 6-6. Option codes are defined in the "Options Service Manual."

Table 6-5
Sequence of Exerciser Routines[a]

Routine Type	Type Number	ON LED	Routine Function
Exerciser	01	CH 1	Display Pots and Switches.
Exerciser	02	CH 2	Examine Calibration Data in RAM.
Exerciser	03	CH 3	Clears Cycle Errors.
Exerciser	04	CH 4	Display ROM Headers.
Exerciser	05	ADD	Display Operating Time and Power Cycle Count.
Exerciser	06	INVERT	Select Setup to Use at Power-Up.
Exerciser	07	CHOP	Enable/Disable Setup SAVE and Sequence Definition.
Exerciser	08	BW LIMIT	Initialize Setups.
Exerciser	09	STEP & CH 1	Program Viewing Time Display (only in 2467B) and CH 1.

[a]Additional Diagnostic Exercisers for extended functions are in Appendix A of the Operators Manual.

Table 6-6
Kernel Test Failure Codes

Failure Codes		
Option	Device	Failing Device
0	0	Control Board RAM
0	1	ROM U2160
0	2	ROM U2360 (U2260)
0	3	Reset Control Circuitry
F	1	Buffer ROM U2160

Table 6-7
Front-Panel LED Option Codes

Option Code					
CH 1 LED (bit 3)	CH 2 LED (bit 2)	CH 3 LED (bit 1)	CH 4 LED (bit 0)	Option Number (in Hex)	Option Name
OFF	OFF	OFF	OFF	0	Basic Instrument
ON	ON	ON	ON	F	Options Buffer Circuitry in Basic Instrument

Table 6-8
Front-Panel LED Device Codes

	Device Code		
READY LED (bit 2)	**+ LED (bit 1)**	**− LED (bit 0)**	**Device Number**
OFF	OFF	OFF	0
OFF	OFF	ON	1
OFF	ON	OFF	2
OFF	ON	ON	3
ON	OFF	OFF	4
ON	OFF	ON	5
ON	ON	OFF	6
ON	ON	ON	7

Even if a Kernel test fails, the operator may try to go to normal oscilloscope operation by pressing the A/B TRIG select push button. Depending on the exact nature of the failure, the instrument may or may not be functional.

Kernel tests are automatically executed at power-up. The Kernel tests are divided into RAM tests and ROM tests as follows:

RAM TEST. This test is done with a complementary data pattern starting at the highest RAM address available and continuing to the lowest. The process reads and saves the original data, and then writes a pattern of 01010101's (55 Hex) at the highest RAM memory address. The data is then read back to see if it is still 55 (Hex). Next a complementary pattern of 10101010 (AA Hex) is written to the same address. Then the address content is read back and tested to see if it is still AA (Hex). After the memory is checked, the original data is written back into the memory address. RAM TEST then checks the next lower address. The testing continues until all of RAM is checked.

Test checks: RAM address decoding, RAM address lines, RAM data lines, RAM memory, and Data Bus Buffers.

ROM TEST. The ROM test performs three checks on each of the system read-only memories.

Data Bus Drive—Two locations containing complementary data patterns are read.

Test checks: Data bus lines and the Data Bus Driver.

Correct Part—A byte in the ROM being checked is compared to the most-significant byte of the addressed ROM block (starting address of where the ROM should be installed).

Test checks: ROM address decoding and proper installation of ROM components.

Checksum—A sixteen bit, spiral-add checksum is calculated and compared to a two-byte value stored in ROM being checked.

Test checks: ROM contents, ROM addressing, ROM data lines, and the Data Bus Driver.

Confidence Tests

The Confidence tests provide checks for much of the remaining circuitry to ensure that instrument operation is correct. Confidence tests are performed automatically at power-up after the Kernel is determined to be functional or initiated by the operator from the Diagnostic Monitor.

A failure of any Confidence test during power-up will pass control to the Diagnostic Monitor; this permits the test results to be examined. Descriptions of the Confidence tests follow.

KERNEL TEST (Test 00). This test is not user selectable, but runs automatically when cycle mode is entered at power up. During cycle mode the microprocessor forces a self-reset by setting the PWR DOWN bit (bit #5) of U2310. If this does not force a reset condition, an error is recorded. Any kernel failures detected during cycle mode are also recorded.

INTERRUPT REQUEST (Test 01). Ten consecutive interrupt cycles are checked to ensure that succeeding interrupts occur not more than 4.5 ms apart (5600 "E" cycles).

Test checks: Interrupt Timer circuitry.

SWITCH STUCK (Test 02). The front-panel, momentary-contact switches are scanned, checking for a closed switch. At power-up, the test runs immediately.

By holding one of the momentary switches in a closed position when power is first applied, this test will fail, and the Diagnostic Monitor will be entered. When the test is started from the Diagnostic Monitor, a one-half second delay is incorporated to allow the COUPLING (test start) switch to return to its normal (open) position. Table 6-4, above, defines the error codes that may be encountered when a switch is detected as closed.

NOTE

When the user presses the lower TRIGGER COUPLING switch to stop this test, an error code may be generated. This is normal and does not indicate an actual failure.

Test checks: Momentary switches, row scanning circuitry, and column scanning circuitry.

READOUT BOARD (Test 03). This two-part test checks the interface to the Readout Board from the Microprocessor and the character RAM circuits.

Processor Interface Test—The Microprocessor loads the three, eight-bit shift registers with an alternating bit pattern that is then shifted back to the processor for comparison.

Test checks: Data Registers, data strobes (clocks), and the data input and output lines.

RAM Test—A "1" is rotated through each byte of the Readout RAM, one bit at a time. Each time an additional bit is rotated into the byte, the byte is loaded into the processor interface and clocked back to the processor for comparison. The byte is then restored to its original content, and each successive byte is tested in the same manner.

Test checks: Readout RAM addressing, Readout RAM data lines, and RAM read/write capability.

CALIBRATION DATA (Test 04). Three checks are performed on the RAM to verify its contents.

Checksum Test—The contents of locations containing calibration constants are checksummed using a spiral-add technique. The result is compared to the stored checksum generated at the time of calibration.

Test checks: RAM addressing and RAM contents.

Parity Test—As each of the calibration constants is read for the Checksum test above, the parity of each 14-bit word is checked.

Test checks: CALIBRATION DATA integrity and RAM CALIBRATION DATA retention.

Limit Test—Checks for valid calibration data.

Test checks: The contents of locations containing calibration data are compared to their stored limits.

MAIN BOARD (Test 05). The AUTO LVL triggering feature (a routine stored in firmware) is operated to detect the peaks of a Line Trigger signal. Detected peaks are compared to expected values to verify operation (and calibration) of interrelated signal processing circuits.

Test checks: Line Trigger source, the A Trigger generation circuitry, and Control DAC U2101 (located on the Control board, diagram 2).

BATTERY VOLTS (Test 06). The battery voltage is read and compared to stored constants. If the voltage is above or below the stored limits the appropriate error code is displayed.

Test checks: Battery voltage, voltage follower operational amplifier U2620C, and CR2770.

Exerciser Routines

The Exerciser routines (see Table 6-5, above) allow the operator to set and examine various bytes of control data used in determining instrument function.

POTS AND SWITCHES (Exerciser 01). This routine displays the values that the Microprocessor detects as the various digitized pots and switches are activated. The left half of the top line of the display appears after turning a pot. The right half of the top line of the CRT display appears after pressing a switch. The top line of the CRT display has the following format:

AA BB CC DEEE FF GG HI JJ KL

The format is defined as follows:

"AA" is the code of the most-recently-activated potentiometer (see Table 6-9 for definition of pot codes).

"BB" is the current value (in hexadecimal) of pot AA. See Table 6-9 for the approximate range of codes for the CCW (counter clockwise) and CW (clockwise) potentiometer rotations.

"CC" is the previous value (in hexadecimal) of pot AA.

"D" is the DAC Multiplexer code used to select pot AA (see Table 6-9).

"EEE" is the 12-bit DAC value (in hexadecimal) associated with pot AA. See Table 6-9 for the approximate range of codes for the CCW (counter clockwise) and CW (clockwise) potentiometer rotations.

"FF" is the code of the previously-activated potentiometer (see Table 6-9).

"GG" is the row code of the most-recently-activated switch (see Table 6-10 for definition of row codes).

"H" is the switch-position code: 0 for open; C for closed.

"I" is the column code of the most-recently-activated switch (see Table 6-10).

"JJ" is the row for for the previously-activated switch.

"K" is the switch-position code: 0 for open; C for closed.

"L" is the column code for the previously-activated switch.

NOTE

For all momentary switches (except A/B TRIG) only the closed position will be shown in the switch-position code locations (H and K). The A/B TRIG switch has both the open and the closed positions shown. (MIN). Maximun intensity is at both the CCW and CW positions.

Table 6-9
Potentiometer Codes and Values (Exerciser 01)

Rotation Values				Potentiometer	
CCW		CW		AA	Name
BB	DEEE	BB	DEEE	Code	
FF	6FFF	00	6000	01	HOLDOFF
FF	3FFF	00	3000	02	Trigger LEVEL
00	1000	FF	1FFF	03	SEC/DIV VAR
FF	5FFF	00	5000	04	Horizontal POSITION
00	0000	FF	3FFF	05	Δ (A section[a])
00	0000	FF	3FFF	06	Δ (B section[a])
00	0000	FF	3FFF	07	Δ REF OR DLY POS (A section[a])
00	0000	FF	3FFF	08	Δ REF OR DLY POS (B section[a])
FF	07FF	00	0000	09	CH 1 VOLTS/DIV VAR
FF	27FF	00	2000	0A	CH 2 VOLTS/DIV VAR
FF	0FFF	00	0000	11	CH 1 Vertical POSITION
FF	1FFF	00	1000	12	CH 2 Vertical POSITION
FF	27FF	00	2000	13	CH 3 Vertical POSITION
FF	37FF	00	3000	14	CH 4 Vertical POSITION
FF	4FFF	00	4800	15	TRACE SEP
FF	5FFF[b]	00	5FFF[b]	16	READOUT INTENSITY
80	6800	FF	6FFF	17	Trace INTENSITY

[a]The Δ REF OR DLY POS and Δ controls are both 180° offset pairs that continuously rotate. Displayed BB values jump and the AA code changes when instrument software switches between the A and B sections. The D code position shows the two most-significant bits of the 14-bit DAC output (in hexadecimal), effectively generating 5.5 turn potentiometer values.

[b]The potentiometer midpoint value is 5800, and the intensity is off (MIN). Maximun intensity is at both the CCW and CW positions.

Table 6-10
Pots and Switches Column
and Row Code Definitions (Exerciser 01)

Row Code (GG)	Column Code (I)	Definition	Row Code (GG)	Column Code (I)	Definition
0	0	Trig COUPLING Down	5	0	READOUT Scale Factors
0	1	Trig COUPLING Up	5	1	Unused
0	2	MEASURE/HELP	5	2	Unused
0	3	CH 1 Coupling Down	5	3	Unused
0	4	CH 1 Coupling Up	5	4	Unused
1	0	CH 4 VOLTS/DIV	6	0	CH 1 VERT MODE
1	1	CH 3 VOLTS/DIV	6	1	CH 2 VERT MODE
1	2	INIT @ 50%	6	2	ADD VERT MODE
1	3	CH 2 Coupling Down	6	3	CH 3 VERT MODE
1	4	CH 2 Coupling Up	6	4	CH 4 VERT MODE
2	0	CH 1 VOLTS/DIV LSB	7	0	STEP/AUTO
2	1	CH 1 VOLTS/DIV Bit 2	7	1	SAVE HELP
2	2	CH 1 VOLTS/DIV Bit 3	7	2	RECALL HELP
2	3	CH 1 VOLTS DIV MSB	7	3	CHOP/ALT
2	4	CH 2 INVERT	7	4	BW LIMIT
3	0	CH 2 VOLTS/DIV LSB	8	0	X10 MAG
3	1	CH 2 VOLTS/DIV Bit 2	8	1	TRACKING/INDEP
3	2	CH 2 VOLTS/DIV Bit 3	8	2	Δt
3	3	CH 2 VOLTS/DIV MSB	8	3	ΔV
3	4	B ENDS A	8	4	Trig SLOPE
4	0	SEC/DIV LSB	9	0	Trig SOURCE Down
4	1	SEC/DIV Bit 2	9	1	Trig SOURCE Up
4	2	SEC/DIV Bit 3	9	2	Trig MODE Down
4	3	SEC/DIV MSB	9	3	Trig MODE Up
4	4	A/B SWP Select	9	4	A/B TRIG Select

CALIBRATION RAM EXAMINE (Exerciser 02). This routine allows the operator to examine the contents of 256 decimal locations, 00 (Hex) through FF (Hex), in RAM. When entered, the Exerciser displays the contents of RAM location 00 (Hex) on the top line of the CRT display. One hundred and seventy calibration constants reside between addresses 01 (Hex) and AA (Hex). Calibration constants residing between 01 (Hex) and 6E (Hex) should have odd parity as explained below. The remaining locations may be of either parity. The readout display line has the following format:

AA DDDD P

The format is defined as follows:

"AA" is the eight-bit address in hexadecimal notation.

"DDDD" is the 14-bit word stored at that location (13 bits of data and one parity bit).

"P" is a parity indicator for the data word: X indicates even parity; blank is odd parity.

Pushing the upper or lower TRIGGER MODE switch will increment or decrement the RAM address by 16 (10 Hex) respectively. Similarly, pushing the upper or lower TRIGGER SOURCE switch will increment or decrement the address by 1 respectively.

CYCLE ERROR CLEAR (Exerciser 03). This routine provides a way for the operator to clear the cycle-failure data written to the RAM when a CYCLE mode failure occurs. Interpretation of the cycle failure data is explained in the "Display Format" description provided earlier in this section. Until the data is cleared, each time the instrument is powered up, the Diagnostic Monitor is entered.

Clearing the RAM location (and the CYCLE ERROR message) is done by scrolling to EXER 03 (CLEAR CYCLE ERROR) and pressing the following switches in sequence:

TRIGGER COUPLING upper (starts exerciser),
TRIGGER SOURCE lower,
TRIGGER MODE lower, then
TRIGGER COUPLING lower (exits the exerciser).

When the CYCLE ERROR CLEAR routine is successfully executed, the cycle failure data will disappear from the display.

DISPLAY ROM HEADERS (Exerciser 04). This routine displays the Standard Tektronix ROM Header of each system ROM on the top line of the CRT display. The readout line has the following format:

CCCC PPPP SS AAAA OD

The definition of the format is as follows:

"CCCC" is a two-byte hexadecimal checksum.

"PPPP" is the four middle digits of the ROM part number.

"SS" is the suffix of the ROM part number (version number).

"AAAA" is the starting address of the ROM (address where the ROM should be installed).

"OD" is a two-character option designator identifying the option that this particular line of diagnostic information refers to (see Options manual for details). For the basic instrument, the OD location is blank.

Pressing the upper TRIGGER COUPLING switch increments the routine to the next ROM Header; pressing the lower TRIGGER COUPLING switch exits the routine.

HRS ON and OFF/ON CYCLES (Exerciser 05). This routine displays the Operating Time and Power Cycle Count (see Operators Manual).

POWER-UP SETUP (Exerciser 06). This routine selects the setup to use at power-up (see Operators Manual).

SAVE ENABLE (Exerciser 07). This routine Enable/Disable setup SAVE and sequence definition (see Operators Manual).

SETUP INIT (Exerciser 08). This routine destroys all saved setups (see Operators Manual).

2467B VIEWING TIMER CONTROL (Exerciser 09). This routine controls the length of time the Viewing Timer is displayed before the SHUTDOWN warning is displayed (see the 2467B Operators Manual).

CONTROLLER LATCHES EXERCISER. This routine is not user selectable, but it runs automatically when the Diagnostic Monitor is waiting for a key activation.

The routine first sets latches U2301 and U2201 (diagram 2). It then pulses the B SWP CLK line (pin 13 of U2660, diagram 1), as a scope trigger, and rotates a "0" through 15 of the 16 latched bits. Bit 16 is not set since it would reset Interrupt Timer U2640 (diagram 1) and upset processor interrupt timing. By externally triggering a test oscilloscope on the B SWP CLK signal line and observing the shifted timing relationships of the latched signals, proper operation of the DAC latches may be verified.

NOP KERNEL EXERCISER. This exerciser is not a firmware routine, but rather a forced hardware condition. It is best suited for troubleshooting an inoperative Control Board, as it exercises only the Microprocessor address

bus (see Table 6-11) and the associated Address Decode circuitry. By moving Jumper P503 (diagram 1) to the Diagnostic position, Data Bus Buffers U2350 and U2450 are disabled, and the Microprocessor is forced into a NOP (no operation) loop. This causes the address on the address bus to be continuously incremented for exercising the Address Decode circuitry. Troubleshooting of kernel addressing with an oscilloscope or logic analyzer is then possible.

Table 6-11
NOP Test Data

U2140 Pin #	Signal Name	1 CYCLE Time	Frequency
9	A0	3.199 μs	312.5 kHz
10	A1	6.39 μs	156.3 kHz
11	A2	12.79 μs	78.15 kHz
12	A3	25.59 μs	39.075 kHz
13	A4	51.18 μs	19.53 kHz
14	A5	102.4 μs	9.769 kHz
15	A6	204.7 μs	4.88 kHz
16	A7	409.4 μs	2.44 kHz
17	A8	818.9 μs	1.22 kHz
18	A9	1638 μs	610.6 Hz
19	A10	3275 μs	305.3 Hz
20	A11	6.55 ms	152.6 Hz
22	A12	13.1 ms	76.3 Hz
23	A13	26.2 ms	38.16 Hz
24	A14	52.4 ms	19.08 Hz
25	A15	104.8 ms	9.54 Hz

CORRECTIVE MAINTENANCE

INTRODUCTION

Corrective maintenance consists of component replacement and instrument repair. This part of the manual describes special techniques and procedures required to replace components in this instrument. If it is necessary to ship your instrument to a Tektronix Service Center for repair or service, refer to the "Instrument Repackaging Instructions" in Section 2.

MAINTENANCE PRECAUTIONS

To reduce the possibility of personal injury or instrument damage, observe the following precautions.

1. Disconnect the instrument from the ac power source before removing or installing components. Verify that the line-rectifier filter capacitors are discharged prior to performing any servicing.

3. Use care not to interconnect instrument grounds which may be at different potentials (cross grounding).

4. When soldering on circuit boards or small insulated wires, use only a 15-watt, pencil-type soldering iron.

WARNING

The battery used in this device may present a fire or chemical burn hazard if mistreated. Do not recharge, rapidly discharge, disassemble, heat above 100°C, (212°F), or incinerate.

Replace battery with part number listed in replaceable parts section only. Use of another battery may present a risk of fire or explosion.

Dispose of used battery promptly. Small quantities of used batteries may be disposed of in normal refuse. Keep away from children. Do not disassemble and do not dispose of in fire.

5. Lithium batteries may be hazardous if mistreated. Follow all safety precautions when working with the batteries.

OBTAINING REPLACEMENT PARTS

Most electrical and mechanical parts can be obtained through your local Tektronix Field Office or representative. However, many of the standard electronic components can usually be obtained from a local commercial source. Before purchasing or ordering a part from a source other than Tektronix, Inc., please check the "Replaceable Electrical Parts" list for the proper value, rating, tolerance, and description.

NOTE

Physical size and shape of a component may affect instrument performance, particularly at high frequencies. Always use direct-replacement components, unless it is known that a substitute will not degrade instrument performance.

Special Parts

In addition to the standard electronic components, some special parts are used in the instrument. These components are manufactured or selected by Tektronix, Inc. to meet specific performance requirements, or are manufactured for Tektronix, Inc. in accordance with our specifications. The various manufacturers can be identified by referring to the "Cross Index-Manufacturer's Code number to Manufacturer" at the beginning of the "Replaceable Electrical Parts" list. Many of the mechanical parts used in this instrument were manufactured by Tektronix, Inc. Order all special parts directly from your local Tektronix Field Office or representative.

Ordering Parts

When ordering replacement parts from Tektronix, Inc., be sure to include all of the following information:

1. Instrument type (include modification or option numbers).

2. Instrument serial number.

3. A description of the part (if electrical, include its full circuit component number).

4. Tektronix part number.

MAINTENANCE AIDS

The maintenance aids listed in Table 6-12 include items required for performing most of the maintenance procedures in this instrument. Equivalent products may be substituted for the examples given, provided their characteristics are similar.

INTERCONNECTIONS

Interconnections in this instrument are made with pins soldered onto the circuit boards. Several types of mating connectors are used for the interconnecting pins. The following information provides the replacement procedures for the various type connectors.

End-Lead Pin Connectors

Pin connectors used to connect the wires to the interconnect pins are factory assembled. They consist of machine-inserted pin connectors mounted in plastic

Table 6-12
Maintenance Aids

Description	Specification	Usage	Example
1. Soldering Iron	15 to 25 W.	General soldering and unsoldering.	Antex Precision Model C.
2. Flat-bit Screwdriver	3-inch shaft, 3/32 inch bit.	Assembly and disassembly.	Xcelite Model R3323.
3. Torx Screwdriver	Tip sizes: #T9, #T10, #T15, #T20.	Assembly and disassembly.	Tektronix Part Numbers #T9 003-0965-00 #T10 003-0815-00 #T15 003-0966-00 #T20 003-0866-00
	Handles		8 1/2 in. 003-0293-00 3 1/2 in. 003-0445-00.
4. Nutdrivers	3/16 inch, 1/4 inch and 5/16 inch	Assembly and disassembly.	Xcelite #6, #8 and #10.
5. Open-end Wrenches	1/4 inch, 5/16 inch, 7/16 inch.	Assembly and disassembly.	
6. Allen Wrenches	0.050 inch, 1/16 inch.	Assembly and disassembly.	
7. Long-nose Pliers		Component removal and replacement.	Diamolloy Model LN55-3.
8. Diagonal Cutters		Component removal and replacement.	Diamalloy Model M554-3.
9. Vacuum Solder Extractor	No static charge retention.	Unsoldering static sensitive devices and components on multilayer boards.	Pace Model PC-10.
10. Spray Cleaner	No-Noise	Switch and Pot cleaning.	Tektronix Part Number 006-0442-02.
11. Pin-replacement kit		Replace circuit board connector pins.	Tektronix Part Number 040-0542-00.
12. IC-Removal Tool		Removing DIP IC packages.	Augat T114-1.
13. Isopropyl Alcohol	Reagent grade.	Cleaning attenuator and front panel assemblies.	2-Isopropanol.

holders. If the connectors are faulty, the entire wire assembly should be replaced.

Multipin Connectors

When pin connectors are grouped together and mounted in a plastic holder, they are removed, reinstalled, or replaced as a unit. If any individual wire or connector in the assembly is faulty, the entire cable assembly should be replaced. Multipin connector orientation is indexed by a triangle on the cable connector and a 1 or triangle on the circuit board. Slot numbers may be molded into the connector. Be sure these index marks are aligned with each other when the multipin connector is reinstalled.

TRANSISTORS, INTEGRATED CIRCUITS, AND HYBRID CIRCUITS

Transistors, integrated circuits, and hybrid circuits should not be replaced unless they are actually defective. If removed from their sockets or unsoldered from the circuit board during routine maintenance, return them to their original board locations. Unnecessary replacement or transposing of semiconductor devices may affect the adjustment of the instrument. When a semiconductor is replaced, check the performance of any circuit that may be affected.

Any replacement component should be of the original type or a direct replacement. Bend transistor leads to fit their circuit board holes, and cut the leads to the same length as the original component. See Figure 9-2 in the "Diagrams" section for lead-configuration illustrations.

The heat-sink-mounted power supply transistors are insulated from the heat sink with a heat-transferring insulator pad. Reinstall the insulator pads and bushings when replacing these transistors. Do not use any type of heat-transferring compound on the insulator pads.

CAUTION

After replacing a power transistor, check that the collector is not shorted to the heat sink before applying power to the instrument.

To remove socketed dual-in-line packaged (DIP) integrated circuits, pull slowly and evenly on both ends of the device. Avoid disengaging one end of the integrated circuit from the socket before the other, since this may damage the pins.

To remove a soldered DIP IC when it is going to be replaced, clip all the leads of the device and remove the leads from the circuit board one at a time. If the device must be removed intact for possible reinstallation, do not heat adjacent conductors consecutively. Apply heat to pins at alternate sides and ends of the IC as solder is removed. Allow a moment for the circuit board to cool before proceeding to the next pin.

Hybrid circuits and heatsinks are removed as a unit by removing the mounting nuts at the four corners of the heatsink/housing. A firm downward pressure at the center of the heatsink will aid in installation/removal of the nuts. The hybrid circuit substrate is bonded to the heatsink/housing casting. Attempting to separate the hybrid device from its heatsink will damage the device.

SOLDERING TECHNIQUES

The reliability and accuracy of this instrument can be maintained only if proper soldering techniques are used to remove or replace parts. General soldering techniques, which apply to maintenance of any precision electronic equipment, should be used when working on this instrument.

WARNING

To avoid an electric-shock hazard, observe the following precautions before attempting any soldering: turn the instrument off, disconnect it from the ac power source, and verify that the line-rectifier filter capacitors have discharged (see label on the primary power shield). If, due to a component failure, the capacitors are not discharging, it may be necessary to discharge them. Use a 1-kΩ 5-watt resistor and discharge the capacitors from point to point through the access holes in the primary power shield.

Use rosin-core wire solder containing 63% tin and 37% lead. Contact your local Tektronix Field Office or representative to obtain the names of approved solder types.

When soldering on circuits boards or small insulated wires, use only a 15-watt, pencil-type soldering iron. A higher wattage soldering iron may cause etched circuit conductors to separate from the board base material and melt the insulation on small wires. Always keep the soldering-iron tip properly tinned to ensure best heat transfer from the iron tip to the solder joint. Apply only enough solder to make a firm joint. After soldering, clean the area around the solder connection with an approved

flux-removing solvent (such as isopropyl alcohol) and allow it to air dry.

Circuit boards in this instrument may have as many as four conductive layers. Conductive paths between the top and bottom board layers may connect to one or more inner layers. If any inner-layer conductive path becomes broken due to poor soldering practices, the board becomes unusable and must be replaced. Damage of this nature can void the instrument warranty.

CAUTION

Only an experienced maintenance person, proficient in the use of vacuum-type desoldering equipment should attempt repair of any circuit board in this instrument.

Desoldering parts from multilayer circuit boards is especially critical. Many integrated circuits are static sensitive and may be damaged by solder extractors that generate static charges. Perform work involving static-sensitive devices only at a static-free work station while wearing a grounded antistatic wrist strap. Use only an antistatic vacuum-type solder extractor approved by a Tektronix Service Center.

CAUTION

Attempts to unsolder, remove, and resolder leads from the component side of a circuit board may cause damage to the reverse side of the circuit board.

The following techniques should be used to replace a component on a circuit board:

1. Touch the vacuum desoldering tool to the lead at the solder connection. Never place the iron directly on the board; doing so may damage the board.

NOTE

Some components are difficult to remove from the circuit board due to a bend placed in the component leads during machine insertion. To make removal of machine-inserted components easier, straighten the component leads on the reverse side of the circuit board.

2. When removing a multipin component, especially an IC, do not heat adjacent pins consecutively. Apply heat to the pins at alternate sides and ends of the IC as solder is removed. Allow a moment for the circuit board to cool before proceeding to the next pin.

CAUTION

Excessive heat can cause the etched circuit conductors to separate from the circuit board. Never allow the solder extractor tip to remain at one place on the board for more than three seconds. Solder wick, spring-actuated or squeeze-bulb solder suckers, and heat blocks (for desoldering multipin components) must not be used. Damage caused by poor soldering techniques can void the instrument warranty.

3. Bend the leads of the replacement component to fit the holes in the circuit board. If the component is replaced while the board is installed in the instrument, cut the leads so they protrude only a small amount through the reverse side of the circuit board. Excess lead length may cause shorting to other conductive parts.

4. Insert the leads into the holes of the board so that the replacement component is positioned the same as the original component. Most components should be firmly seated against the circuit board.

5. Touch the soldering iron to the connection and apply enough solder to make a firm solder joint. Do not move the component while the solder hardens.

6. Cut off any excess lead protruding through the circuit board (if not clipped to the correct length in step 3).

7. Clean the area around the solder connection with an approved flux-removing solvent. Be careful not to remove any of the printed information from the circuit board.

8. When soldering to the ceramic CRT-termination network, a slightly larger soldering iron can be

used. It is recommended that a solder containing about 3% silver be used when soldering to the ceramic material to avoid destroying the bond. The bond can be broken by repeated use of ordinary tin-lead solder or by the application of too much heat; however, occasional use of ordinary solder will not break the bond, provided excessive heat is not applied when making the connection.

REMOVAL AND REPLACEMENT INSTRUCTIONS

WARNING

To avoid electric shock, disconnect the instrument from the ac power source before removing or replacing any component or assembly.

WARNING

Removal of the cabinet and other external panels leaves the CRT exposed for possible damage. All procedures in these instructions require careful attention to avoid damage to the CRT which could cause it to implode. An implosion creates high speed glass fragments. Wear protective clothing and use safety shields as required. See "WARNING" in "CRT REMOVAL".

The exploded view drawing in the "Replaceable Mechanical Parts" list at the rear of this manual may be helpful during the removal and reinstallation of individual components or subassemblies. Circuit board and component locations are illustrated in the "Diagrams" section of this manual.

Cabinet Removal

Removal of the instrument wrap-around cabinet is accomplished by the following steps:

1. Unplug the power cord from the ac power source.

2. Unplug the power cord from the rear-panel connector.

3. Install the front cover, place the cabinet carrying handle against the bottom of the cabinet, and set the instrument face down on a flat surface.

4. On 2465B instruments, unwrap the power cord and remove it.

5. Remove the four screws in the rear feet.

6. Remove the two screws from the top-center and bottom-center of the rear cover.

7. Lift the rear cover and power cord away from the instrument, leaving the rear feet attached.

WARNING

Dangerous potentials exist at several points throughout this instrument. If it is operated with the cabinet removed, do not touch exposed connections or components. Some transistors may have elevated case voltages. Disconnect the ac power source from the instrument and verify that the line-rectifier filter capacitors have discharged before cleaning the instrument or replacing parts (see label on the primary power shield).

8. Slide the cabinet off the instrument.

To reinstall the wrap-around cabinet, perform the reverse of the preceding instructions. Ensure that the cabinet fits properly into the EMI gasket grooves in the front frame and rear panel.

WARNING

The line-rectifier filter capacitors normally retain a charge for a short period (approximately 15 to 20 seconds) after the instrument is turned off and can remain charged for a longer period if a bleeder-resistor or power-supply problem occurs. Before beginning any cleaning or work on the internal circuitry of the oscilloscope, disconnect the ac power source from the instrument and verify that the capacitors

have discharged to 24 V or less. Measurement is made at the three points indicated on the plastic primary input shield at the rear of the instrument (after the Top-Cover Plate is removed). If the capacitors retain charges of greater than 24 V for more than 20 seconds, discharge them using a 1 k, 5-watt resistor connected point-to-point across the capacitors through the access holes. Ensure that the capacitors are discharged before starting to troubleshoot.

Vertical Bracket (Top-Cover Plate) Removal

To remove the Vertical Bracket from instruments that do not have the DMM option installed, perform the following steps:

1. Remove the instrument Cabinet as described in that procedure.

2. Set the instrument, bottom down, on a flat surface.

3. Remove two top securing screws at the front edge of the Vertical Bracket.

4. (SN B049999 and below.) Remove the two screws in the right-center of the Vertical Bracket.

4. (SN B050000 and above.) Remove one screw in the right-center of the Vertical Bracket.

5. Remove the top securing screw at the left-rear of the Vertical Bracket.

6. Remove the securing screw from the chassis rear plate.

7. Remove the securing screw from the left side of the chassis.

8. Lift the Vertical Bracket up and away from the instrument.

(SN B049999 and below.) To reinstall the Vertical Bracket, perform the reverse of the preceding instructions. Be certain to align the circuit board at the right rear with the two black grommets installed in the Vertical Bracket. Align the two black plastic pins on the power supply assembly with their mating holes before installing and tightening screws.

(SN B050000 and above.) To reinstall the Vertical Bracket, perform the reverse of the preceding instructions. Align the black plastic pin on the power supply assembly with its mating hole before installing and tightening screws.

A5—Control Board Removal

Removal of the Control Board is accomplished by the following steps:

1. Remove the instrument wrap-around cabinet as described in that procedure.

2. Place the instrument on its left side on a flat surface.

3. Disconnect the two ribbon-cable and one flex-circuit connectors (P251, P651, and P652) from the Control board (see Figure 6-2).

4. (SN B049999 and before.) Disconnect the two ribbon-cable connectors (P511 and P512) from the Main Board.

4. (SN B050000 and above.) Disconnect the three ribbon-cable connectors (P411, P511, and P512) from the Main Board.

5. Remove the five mounting screws securing the Control board to the chassis, one at each corner of the board and one at the center.

6. Lift the Control board away from the chassis.

To reinstall the Control board, perform the reverse of the preceding instructions.

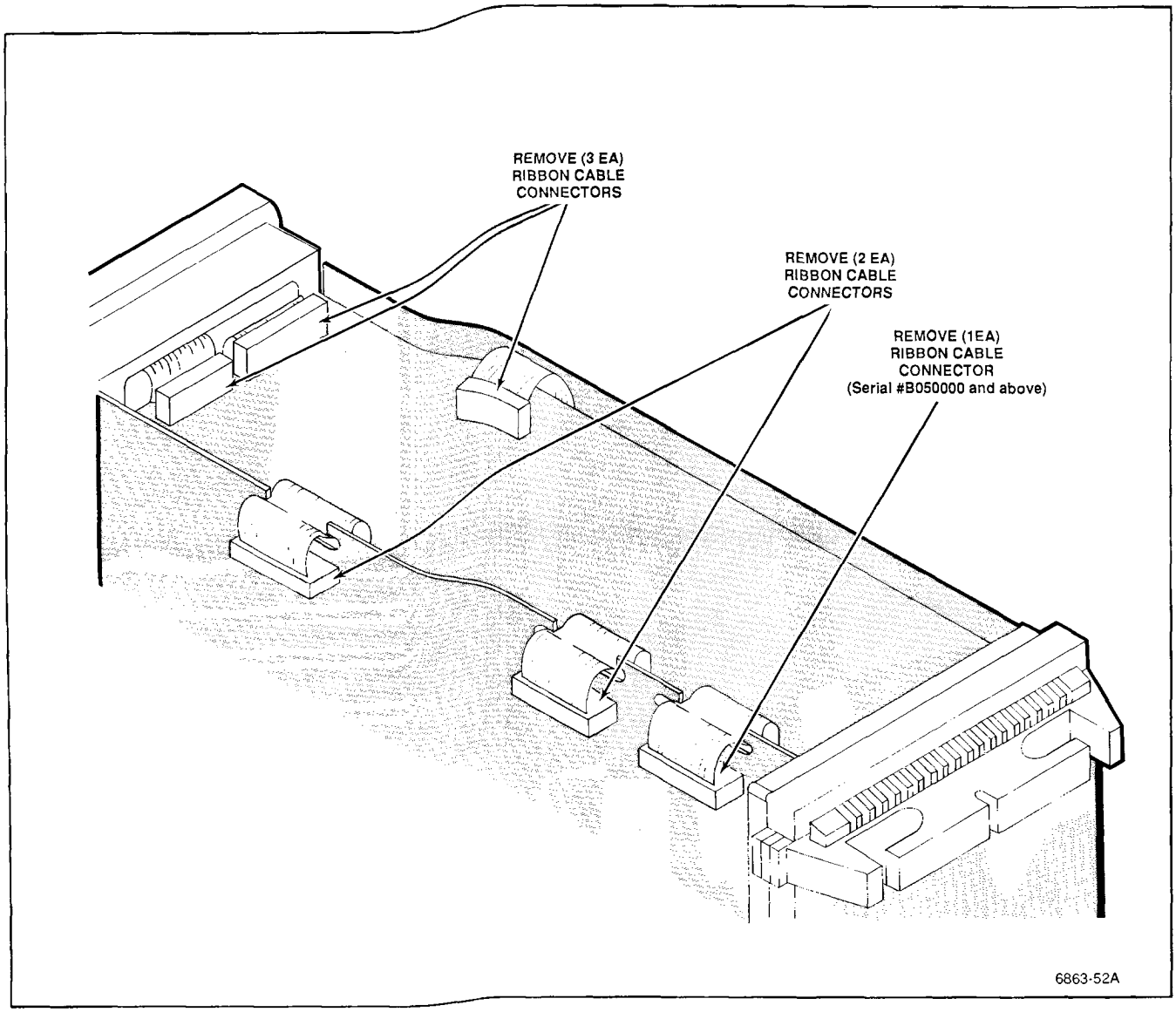

FAN REMOVAL. (If your instrument has the DMM option installed *and* has a serial number of SN B049999 or below, use the "Fan Removal" procedure in your Options Service Manual.) For all others, removal of the fan is accomplished by the following steps:

1. Desolder the wires from the feed-through capacitor (C10) and ground lug, noting color code for reassembly.

2. Remove the Fan retainer screw, located above the Fan.

3. Remove the Fan retainer and Fan.

To reinstall the Fan, perform the reverse of the above instructions. Align the holes in the Fan flange with the pins on the rear plate before tightening the screw.

A2/A2A1 and A3—Power Supply Assembly Removal

Removal of the Power Supply assembly from instruments that do not contain options is accomplished by the following steps:

1. Remove the instrument Cabinet as described in that procedure.

2. Remove the Vertical Bracket as described in that procedure.

3. Remove the Fan as described in that procedure.

4. Desolder the Fan power cable connecting the power supply to the feed-through capacitor (C10) on the inside of the rear plate.

5. Remove the two screws in the rear plate holding the black plastic primary circuit shield (located inside the chassis) and remove the shield.

6. Remove the two screws holding the rear of the Power Supply assembly to the rear plate.

7. Remove the three screws securing the power-transistor heatsink to the chassis.

8. Disconnect the power supply ribbon-cable connector (P251) from the Control board and feed the cable through the notch in the Control board and slot in the chassis.

9. Disconnect the two cables (P121 and P122) connecting the Main board to the Power Supply from the side of the Power Supply assembly.

10. Disconnect the four primary power connectors (P204, P205, P206, and P207) at the rear of the Power Supply assembly. Note their orientation for reinstallation.

11. If the Probe Power option is installed, disconnect the Probe Power connectors (P201 and P202) from the Power Supply assembly.

12. Lift the Power Supply assembly from the instrument.

To reinstall the Power Supply assembly, perform the reverse of the preceding instructions.

The following procedures describe the further disassembly of the Power Supply assembly circuit boards once the assembly is removed from the instrument.

INVERTER BOARD AND REGULATOR BOARD SEPARATION. To separate the Inverter and Regulator boards, perform the following steps:

1. Remove the rear-corner securing screw from the Regulator board and the two screws at the front edge of this board.

2. Unplug the four pin disconnect terminals (J231, J232, J233, and J234) while disabling the locking leg on the connector retainer.

3. (SN B049999 and below.) Separate the two circuit boards by removing the four black plastic spacers from the top and bottom edges of the assembly.

3. (SN B050000 and above.) Separate the two circuit boards by removing the three black and one white spacers from the top and bottom edges of the assembly. Note the location of the white spacer for reassembly.

To rejoin the Inverter and Regulator boards, perform the reverse of the preceding steps.

A9—High-Voltage Board Removal

Removal of the High-Voltage board is accomplished by the following steps:

1. Remove the instrument Cabinet as described in that procedure.

2. Remove the Vertical Bracket as described in that procedure.

WARNING

The CRT anode lead may retain a high-voltage charge after the instrument is turned off. To avoid electrical shock, ground the CRT anode lead to the chassis after disconnecting the plug. Reconnect and disconnect the anode-lead plug several times, grounding the anode lead to chassis ground each time it is disconnected to fully dissipate the charge.

3. Unplug the CRT anode lead and discharge it to chassis ground.

4. Remove the high-voltage lead from the retainer cap.

5. Unplug the two leads connecting the CRT to the ceramic CRT terminator. Use long-nose pliers to pull the connectors straight away from the CRT neck pins. Avoid putting pressure on the metal-to-glass seal at the base of the pins.

6. Disconnect the single conductor connector from the ceramic CRT terminator.

7. Remove the two nuts retaining the ceramic CRT terminator to the chassis and remove the terminator.

8. Remove the nut retaining the high-voltage lead clamp to the chassis and remove the clamp.

9. Remove three screws on the rear CRT cover. Remove the cover.

10. Remove the five screws securing the High-Voltage Shield and remove the shield. If optional assembly cables are mounted in the shield's groove, it will be necessary to loosen these cables from the option board enough to slip the cover out underneath them.

11. Remove the high-voltage lead from the u-shaped grommet in the rear plate.

12. Unplug the CRT socket by gently prying evenly on both sides of the socket until the socket can be disengaged from the CRT pins. Do not apply side pressure on the socket.

13. Disconnect the connectors (2465B: P901, P902, P903, and P904); (2467B: P4370, P4371, P4372, P4390, P4391, and P4401) from the High-Voltage board. Note connector orientation for reinstallation.

14. Remove the four spacer posts securing the High-Voltage Board to the chassis.

15. Carefully tilt the top of the High Voltage board out far enough to clear the chassis side flange while pulling the board up gently to disengage the High-Voltage board pin connectors from the Main board.

16. Lift the board from the chassis while carefully feeding the CRT socket, cabling, and high-voltage lead through the rear plate slot.

To reinstall the High-Voltage Board, perform the reverse of the preceding instructions.

A4—Readout Board Removal (SN B049999 and Below)

Removal of the Readout Board is accomplished by the following steps:

1. Remove the instrument Cabinet as described in that procedure.

2. Remove the Vertical bracket as described in that procedure.

3. Place the instrument, left side down, on a flat surface.

4. Disconnect the Readout board ribbon-cable connector (P411) from the Main board.

5. With the instrument still on its side, pull the Readout board out of its plastic board mounts. Remove it from the instrument while guiding the ribbon cable and connector through the slots in the Main board and chassis.

To reinstall the Readout board, perform the reverse of the preceding steps.

A6—Front-Panel Circuit Board Assembly Removal

Removal of the Front-Panel circuit board assembly is accomplished by the following steps:

1. Remove the instrument Cabinet as described in that procedure.

2. Set the instrument back into its rear cover with the CRT facing up. Using a small-bladed screwdriver, gently pry up on the top cover trim strip to release it from the top edge of the front decorative trim ring.

3. Remove the four screws from the top edge of the front decorative trim ring.

4. Remove the four screws and the two plastic feet from the bottom edge of the front decorative trim ring.

5. Using firm outward pressure, pull the knobs from the four controls directly below the CRT (INTENSITY, FOCUS, READOUT INTENSITY, and SCALE ILLUM).

6. Slide off the front decorative trim ring. The clear implosion shield is retained by the trim ring. Use care to avoid dislodging the shield accidentally from its recess in the CRT frame.

7. Disconnect the ribbon-cable connector (P652) and the flex-circuit connector (P651) from the front of the Control Board. Feed the flex-circuit connector through the slot carefully while sliding the front panel gently outward.

8. Pull out the Front-Panel Circuit Board Assembly.

The following steps describe the further disassembly of the Front-Panel Assembly once it is removed from the instrument.

ASSEMBLY SEPARATION. Separation of the pot holder module from the Front-Panel Board is accomplished by the following steps:

1. Using a 1/16-inch Allen wrench, loosen the set screws in the CH 1 VOLTS/DIV VAR, CH 2 VOLTS/DIV VAR, and A and B SEC/DIV VAR knobs and remove these three knobs from their control shafts.

2. Using a 1/16-inch Allen wrench, loosen the six set screws in the CH 1 and CH 2 VOLTS/DIV knobs, and the SEC/DIV knob. Remove these three knobs from their control shafts.

3. Using firm outward pressure, pull off the remaining knobs. Note the locations of the knobs with indicator bars for reference during reinstallation.

4. On the rear of the assembly, remove the four screws securing the black variable resistor holder assembly.

5. Separate and slide out the above assembly with attached variable-control shafts. Avoid stressing the shafts to the side while sliding the assembly out.

FRONT-PANEL REMOVAL. Use the following procedure to further disassemble the Front-Panel circuit board assembly.

1. Separate the Front-Panel and variable resistor holder assembly as described above (if not already done).

2. Lift up the circuit board carefully to avoid dislodging any of the square push buttons from their switches.

3. Lift off the black plastic switch guide and mounting ring.

To reassemble and reinstall the Front-Panel assembly, perform the reverse of the preceding instructions. When reinstalling the circuit board, align all push buttons and LEDs with the black plastic switch guides before installing and tightening the screws.

A1A11 and A1A12—Channel 1 and Channel 2 Attenuator Assembly Removal

Removal of either the Channel 1 or Channel 2 Attenuator assembly is accomplished by the following steps:

1. Remove the instrument Cabinet as described in that procedure.

2. Remove the Front-Panel assembly as described in that procedure.

3. Remove the two screws holding the Attenuator support bar and remove the bar.

4. For each attenuator, remove the two screws holding the Attenuator to the front subpanel and the two screws holding it to the Main board (through access holes in the front panel compartment of the chassis).

5. Disconnect the associated multipin connector (either P10 for Channel 1 or P11 for Channel 2) from the Main board.

6. Remove the two screws holding the preamplifier shield and ground clip and remove them.

7. Desolder the two Attenuator output leads and the compensation capacitor lead.

8. Unplug the Attenuator by gently pulling the assembly straight up and away from the Main Board.

To reinstall a removed Attenuator assembly, perform the reverse of the preceding steps.

A1—Main Board Removal

Removal of the Main Board is accomplished by the following steps:

1. Remove the instrument Cabinet as described in that procedure.

2. Remove the Vertical Bracket as described in that procedure.

3. Remove the Front-Panel circuit board assembly as described in that procedure.

4. Disconnect the two power-supply multipin connectors (P121 and P122) from the side of the Power Supply assembly.

5. Disconnect the three ribbon-cable connectors (P411, P511, and P512) from the bottom of the Main board.

See "Warning" under CRT removal instructions before proceeding.

6. Disconnect the vertical and horizontal deflection leads from the neck pins of the CRT. Access is via holes in the Main board. Use long-nose pliers to disconnect the pins by gently pulling straight up on the connectors. Avoid putting side pressure on the metal-to-glass seal of the CRT neck pins.

7. Desolder the rear-panel BNC connector leads from the BNCs. Unplug the CH 2 OUT cable (P105) from the Main board, and remove its cable retaining clamp.

8. Disconnect the flex-circuit connector (P120) for the CRT controls from the Main board.

9. Disconnect the two-conductor connector (P181) for the Scale Illumination board near the ASTIG and the SCALE ILLUM controls.

10. Remove the STEP/AUTO jack (J12) retaining nut from the rear plate after desoldering its wire from the Main board using correct vacuum desoldering techniques. Remove the jack.

11. Turn the long extension shaft (see Figure 6-3) CCW and unsnap it from the pivot bracket at the rear middle of the Main board, sliding it out of the bracket sideways.

CAUTION

Do not pull on the power switch push button or it will be damaged.

12. Remove the power switch push button mounting screw (item A) shown in Figure 6-3. Separate the long extension shaft from the short extension shaft at point B by inserting a small screwdriver tip in the slot while pulling out on the bracket at point C. Remove the screw (item D) and slide the long extension shaft out the rear of the front frame.

13. Remove the two screws holding the Attenuator support bar and remove the bar.

14. Remove the six screws holding the Attenuator assemblies and the CH 3 and CH 4 input connectors to the front subpanel.

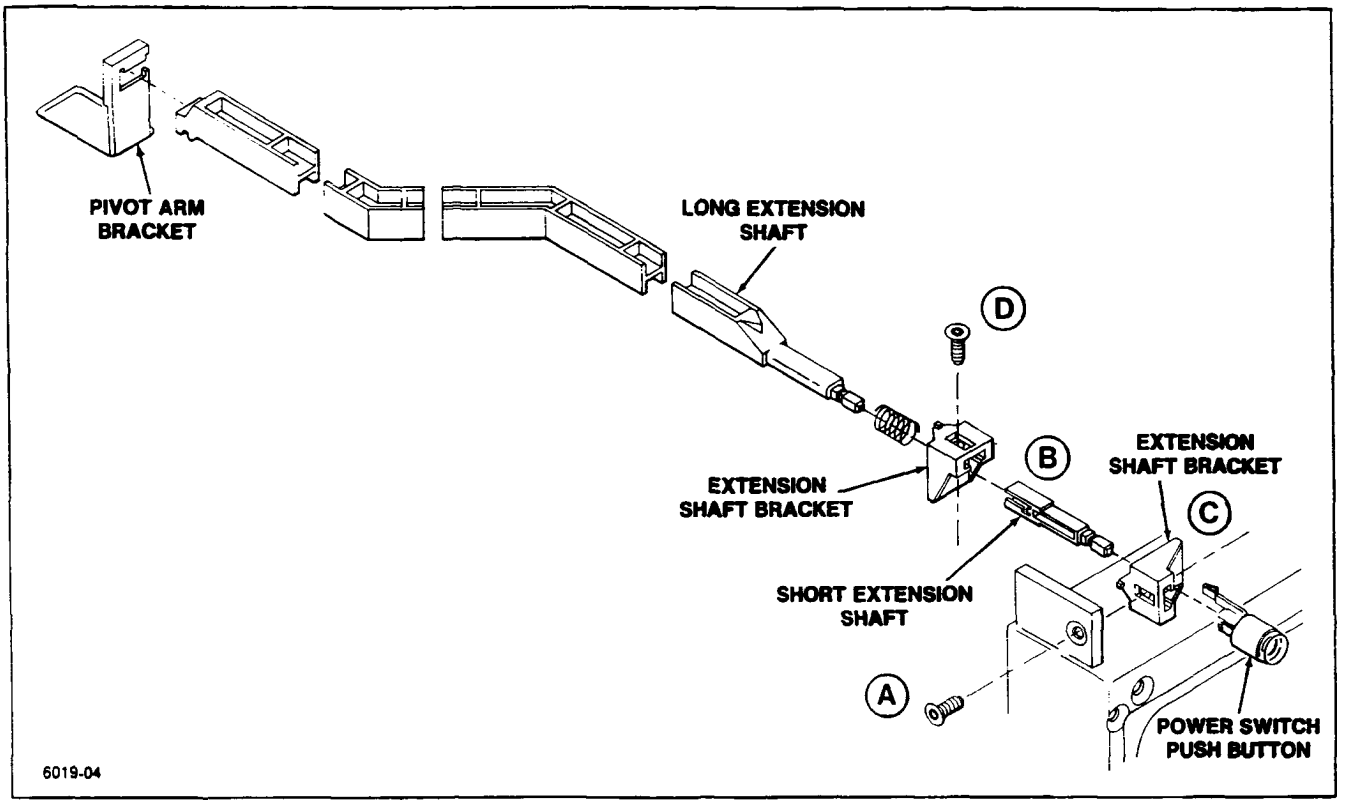

Figure 6-3. Power Switch Push Button Disassembly.

15. Remove the Main board mounting screws (ten screws total securing the Main board to the chassis).

16. Lift the rear of the Main board away from the chassis to unplug J191 and separate the Main board from the High Voltage board. When the plug pins are completely disengaged and the rear of the board clears the rear frame, slide the Main board rearward out of the front subpanel. Lift the Main board (with attached Delay Line) clear of the instrument while working the power supply cables through the slot in the chassis.

To reinstall the Main board, perform the reverse of the preceding instructions.

A8—Scale Illumination Circuit Board Removal

See "Warning" under CRT Removal before proceeding.

Removal of the Scale-Illumination Circuit Board is accomplished by the following steps:

1. Remove the instrument Cabinet as described in that procedure.

2. Remove the front decorative trim ring as described in the A6-Front Panel board removal procedure.

3. Remove the eight screws in the CRT frame. Remove frame and black plastic gasket. Note the difference in length of the screws for reinstallation.

4. Remove the clear plastic light reflector from the Scale-Illumination circuit board and the black plastic mounting spacer.

5. Disconnect the scale-illumination multipin connector (P181) from the Main board.

6. Remove the Scale-Illumination circuit board by lifting it away from the front subpanel while working the wires and connector through the slot in the subpanel.

To reinstall the Scale-Illumination circuit board, perform the reverse of the preceding instructions.

CRT Removal

WARNING

Use care when handling a CRT. Breakage of the CRT may cause high-speed scattering of glass fragments (implosion). Protective clothing and safety glasses (preferably a full-face shield) should be worn. Avoid striking the CRT on any object which may cause it to crack or implode. When storing a CRT, place it in a protective carton or set it face down on a smooth surface in a protected location. When stored face down, it should be placed on a soft, nonabrasive surface to prevent the CRT face plate from being scratched.

1. Remove the instrument Cabinet as described in that procedure.

2. Remove the Vertical Bracket as described in that procedure.

3. Remove three screws on the rear CRT cover. Remove the cover.

4. Unplug the CRT socket by gently prying the socket evenly on both sides until the pins can be disengaged. Do not apply side pressure on the socket.

WARNING

The CRT anode lead and the output terminal of the High-Voltage Multiplier can retain a high-voltage charge after the instrument is turned off. To avoid electrical shock, ground both the CRT anode lead and the high-voltage lead to the main instrument chassis. Repeat the grounding process several times to fully dissipate the charge.

5. Disconnect the CRT anode lead connector and discharge it to chassis ground.

6. Using long-nosed pliers, disconnect the horizontal and vertical deflection leads from the bottom of the CRT. Pull straight out on these connectors to prevent strain on the metal-to-glass seal. (Access to the connectors is through holes in the Main board.)

7. Using long-nosed pliers, disconnect the vertical termination leads from the top of the CRT. On the 2465B, also disconnect the CRT shield ground lead from the top of the CRT.

8. Remove the five screws securing the High-Voltage Shield and remove the shield. If optional assembly cables are mounted in the shield's groove, it will be necessary to loosen these cables from the option board enough to slip the cover out underneath them.

9. Disconnect the connectors (2465B: P903); (2467B: P4370, P4371, P4390, and P4391) from the front of the High-Voltage board. Note connector orientation for reinstallation.

10. Remove the front decorative trim ring as described in the A6-Front-Panel circuit board assembly removal instructions.

11. Remove the eight retaining screws from the CRT-mounting bezel at the front of the CRT. Note the difference in length of the screws for reinstallation. Push in on the four longer (outer) screws to disengage the CRT retainers.

12. Remove the CRT frame and black plastic gasket from the front of the instrument, working the frame gently from side to side to free it from the CRT (if required).

13. Slide the CRT out of the instrument while feeding the CRT leads through their respective holes in the CRT shield and front subpanel.

NOTE

Once the CRT is removed, it should be stored in such a manner as to protect it from impact. If stored face down, it should be placed on a soft, nonabrasive surface to prevent the CRT face plate from being scratched. To reinstall the CRT, perform the reverse of the preceding instructions. Be certain the two pins on the lower edge of the CRT frame align with the hole and slot in the front subpanel of the chassis. Tighten the shorter screws to 10 in-lb of torque before tightening any of the longer screws. Then tighten the longer screws in sequence:

2 1

4 3

Screw number one aligns the CRT. On the third time through the sequence, tighten each screw to 10 in-lb of torque.

OPTIONS

INTRODUCTION

This section contains a general description of instrument options available at the time of publication of this manual. Additional information about instrument options and option availability can be obtained either by consulting the current Tektronix Product Catalog or by contacting your local Tektronix Field Office or representative.

POWER CORD OPTIONS

Instruments are shipped with the detachable power-cord configuration ordered by the customer. Descriptive information about the international power-cord options is provided in Section 2, "Preparation for Use." The following list identifies the Tektronix part numbers for the optional power cords and associated fuses.

Universal Euro

Power cord (2.5 m)	Option A1
Fuse (1.6 A, 250 V, 5 x 20 mm, Quick-acting)	159-0098-00

UK

Power cord (2.5 m)	Option A2
Fuse (1.6 A, 250 V, 5 x 20 mm, Quick-acting)	159-0098-00

Australian

Power Cord (2.5 m)	Option A3
Fuse (1.6 A, 250V, 5 x 20 mm, Quick-acting)	159-0098-00

North American

Power Cord (2.5 m)	Option A4
Fuse (2 A, 250 V, AGC/3AG, Fast-blow)	159-0021-00

Switzerland

Power Cord (2.5 m)	Option A5
Fuse (1.6 A, 250 V, 5 x 20 mm, Quick-acting)	159-0098-00

OPTION 01 (2465B ONLY)

Option 01 (DMM) adds a 4-1/2 digit, fully autoranging digital multimeter which measures dc and ac voltage and current, resistance, dBV, dBm, continuity, and temperature. Option 1B is the same as Option 01 except that the temperature probe is not included. Measurement results and DMM messages are displayed on the top line of the oscilloscope CRT readout.

OPTION 1R

When the oscilloscope is ordered with Option 1R, it is shipped in a configuration that permits easy installation into a 19-inch-wide electronic-equipment rack.

An optional rear-support kit is also available for use when rackmounting the instrument. Using this optional rear-support kit enables the rackmounted instrument to meet appropriate electrical and environmental specifications.

Connector-mounting holes are provided in the front panel of the rackmounted instrument. These enable convenient accessing of the four BNC connectors (CH 2 SIGNAL OUT, A GATE OUT, B GATE OUT, and EXT Z AXIS IN) and the two PROBE POWER connectors located on the rear panel. Additional cabling and connectors required to implement any front-panel access to the rear-panel connectors are supplied by the user; however, these items can be separately ordered from Tektronix.

Complete rackmounting instructions are provided in a separate document shipped with Option 1R. These instructions also contain appropriate procedures to convert a

standard instrument into the Option 1R configuration by using the rackmounting conversion kit.

OPTION 05

Option 05 (TV) simplifies triggering and viewing of television signals. The option adds TV (back-porch) clamp circuitry to the Channel 2 input and TV trigger coupling modes, allowing selection of either horizontal or vertical sync pulses to obtain horizontal-line-sync or field-sync pulse triggering. This option permits triggering on a specific line number within a TV field and provides sync polarity switching for either sync-negative or sync- positive composite video signals.

OPTIONS 06 AND 09

Options 06 (Counter/Timer/Trigger) and 09 (Counter/Timer/Trigger with Word Recognizer) allow precision time-interval measurement, event and frequency counting, delay-by-events triggering, and logic triggering. The 17-bit Word Recognizer probe of Option 09 extends the capabilities of these functions.

OPTION 10

Option 10 allows the instrument to be remotely controlled and queried using a standard interface system. The interface implemented conforms to the specifications contained in *IEEE Standard Digital Interface for Programmable Instrumentation (ANSI/IEEE Std 488-1978)*, commonly referred to as the General Purpose Interface Bus (GPIB). It also complies with a Tektronix Standard relating to GPIB Codes, Formats, Conventions and Features.

OPTION 11

Option 11 provides two probe-power connectors on the rear panel of the instrument. Voltages supplied at these connectors meet the power requirements of standard Tektronix active oscilloscope probes.

REPLACEABLE ELECTRICAL PARTS

PARTS ORDERING INFORMATION

Replacement parts are available from or through your local Tektronix, Inc. Field Office or representative.

Changes to Tektronix instruments are sometimes made to accommodate improved components as they become available, and to give you the benefit of the latest circuit improvements developed in our engineering department. It is therefore important, when ordering parts, to include the following information in your order: Part number, instrument type or number, serial number, and modification number if applicable.

If a part you have ordered has been replaced with a new or improved part, your local Tektronix, Inc. Field Office or representative will contact you concerning any change in part number.

Change information, if any, is located at the rear of this manual.

LIST OF ASSEMBLIES

A list of assemblies can be found at the beginning of the Electrical Parts List. The assemblies are listed in numerical order. When the complete component number of a part is known, this list will identify the assembly in which the part is located.

CROSS INDEX-MFR. CODE NUMBER TO MANUFACTURER

The Mfr. Code Number to Manufacturer index for the Electrical Parts List is located immediately after this page. The Cross Index provides codes, names and addresses of manufacturers of components listed in the Electrical Parts List.

ABBREVIATIONS

Abbreviations conform to American National Standard Y1.1.

COMPONENT NUMBER (column one of the Electrical Parts List)

A numbering method has been used to identify assemblies, subassemblies and parts. Examples of this numbering method and typical expansions are illustrated by the following:

Example a.

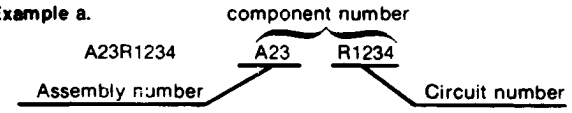

Read: Resistor 1234 of Assembly 23

Example b.

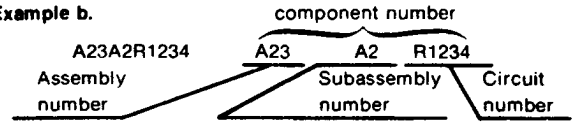

Read: Resistor 1234 of Subassembly 2 of Assembly 23

Only the circuit number will appear on the diagrams and circuit board illustrations. Each diagram and circuit board illustration is clearly marked with the assembly number. Assembly numbers are also marked on the mechanical exploded views located in the Mechanical Parts List. The component number is obtained by adding the assembly number prefix to the circuit number.

The Electrical Parts List is divided and arranged by assemblies in numerical sequence (e.g., assembly A1 with its subassemblies and parts, precedes assembly A2 with its subassemblies and parts).

Chassis-mounted parts have no assembly number prefix and are located at the end of the Electrical Parts List.

TEKTRONIX PART NO. (column two of the Electrical Parts List)

Indicates part number to be used when ordering replacement part from Tektronix.

SERIAL/MODEL NO. (columns three and four of the Electrical Parts List)

Column three (3) indicates the serial number at which the part was first used. Column four (4) indicates the serial number at which the part was removed. No serial number entered indicates part is good for all serial numbers.

NAME & DESCRIPTION (column five of the Electrical Parts List)

In the Parts List, an Item Name is separated from the description by a colon (:). Because of space limitations, an Item Name may sometimes appear as incomplete. For further Item Name identification, the U S. Federal Cataloging Handbook H6-1 can be utilized where possible.

MFR. CODE (column six of the Electrical Parts List)

Indicates the code number of the actual manufacturer of the part. (Code to name and address cross reference can be found immediately after this page.)

MFR. PART NUMBER (column seven of the Electrical Parts List)

Indicates actual manufacturers part number.

CROSS INDEX – MFR. CODE NUMBER TO MANUFACTURER

Mfr. Code	Manufacturer	Address	City, State, Zip Code
D5243	ROEDERSTEIN E SPEZIALFABRIK FUER KONDENSATOREN GMBN	LUDMILLASTRASSE 23–25	8300 LANDSHUT GERMANY
S3774	OSHINO ELECTRIC LAMP WORKS LTD	5 2 MINAMI SHINAGAWA 2 CHORE SHINAGAWA KU	TOKYO JAPAN
TK0161	WYLE LABORATORIES ELECTRONICS MARKETING GROUP LOS ANGELES DIV	124 MARYLAND ST	EL SEGUNDO CA 90245–4115
TK0515	EVOX–RIFA INC	100 TRI–STATE INTERNATIONAL SUITE 290	LINCOLNSHIRE IL 60015
TK0753	RATEL ELECTRONICS	948 BENICIA AVENUE	SUNNYVALE CA 94086
TK1177	BELL INDUSTRIES (DIST)	6024 SW JEAN ROAD	LAKE OSWEGO OR 97034
TK1352	INTERFACE ELECTRONICS CORP	300 2–ND AVENUE WEST	SEATTLE WA 98119
TK1492	COFER COMPONENT PROCESSING	3270 KELLER ST UNIT 11	SANTA CLARA CA 95050
TK1547	MOORE ELECTRONICS INC (DIST)	19500 SW 90TH COURT PO BOX 1030	TUALATIN OR 97062
TK1727	PHILIPS NEDERLAND BV AFD ELONCO	POSTBUS 90050	5600 PB EINDHOVEN THE NETHERLANDS
TK1743	UNITRODE (UK) LTD	6 CRESSWELL PARK BLACKHEATH	LONDON SE 3 9RD ENGLAND
TK1864	INTERFET CORP	322 GOLD ST	GARLAND TX 75042
TK1913	WIMA THE INTER–TECHNICAL GROUP IND	ONE BRIDGE ST PO BOX 23	IRVINGTON NY 10533
TK2073	TOCOS AMERICA INC	565 W GULF ROAD	ARLINGTON HEIGHTS IL 60005
TK2292	SENSOR AND SWITCHES INC DIV OF DESCO CORP OF COLUMBUS OHIO	PO BOX 3297	LEXINGTON OH 44904
TK2319	COLLMER	14368 PROTON RD	DALLAS TX 75244
TK2424	CHAMPION TECHNOLOGIES	2553 N EDGINGTON ST	FRANKLIN PARK IL 60131
0B0A9	DALLAS SEMICONDUCTOR CORP	4350 BELTWOOD PKWY SOUTH	DALLAS TX 75244
0CVK3	ALLEGRO MICROSYSTEMS INC INTEGRATED CIRCUITS DIV	115 NE CUTOFF	WORCHESTER MA 01606
0JR03	ZMAN MAGNETICS INC	7633 S 180th	KENT WA 98032
0JR04	TOSHIBA AMERICA INC ELECTRONICS COMPONENTS DIV BUSINESS SECTOR	2692 DOW AVE	TUSTIN CA 92680
0J7N9	MCX INC	30608 SAN ANTONIO ST	HAYWARD CA 94544
0J9R2	HARISON ELECTRIC CO LTD	ASAHIMACHI 5–CHOME IMABARI	EHIME JAPAN
0J9R5	MARCON AMERICA CORP	3 PEARL COURT	ALLENDALE NJ 07401
00779	AMP INC	2800 FULLING MILL PO BOX 3608	HARRISBURG PA 17105
01121	ALLEN–BRADLEY CO	1201 S 2ND ST	MILWAUKEE WI 53204–2410
01295	TEXAS INSTRUMENTS INC SEMICONDUCTOR GROUP	13500 N CENTRAL EXPY PO BOX 655012	DALLAS TX 75265
02113	COILCRAFT INC	1102 SILVER LAKE RD	CARY IL 60013–1658

CROSS INDEX – MFR. CODE NUMBER TO MANUFACTURER

Mfr. Code	Manufacturer	Address	City, State, Zip Code
04222	AVX CERAMICS DIV OF AVX CORP	19TH AVE SOUTH P O BOX 867	MYRTLE BEACH SC 29577
04713	MOTOROLA INC SEMICONDUCTOR PRODUCTS SECTOR	5005 E MCDOWELL RD	PHOENIX AZ 85008–4229
05292	ITT COMPONENTS DIV		CLIFTON NJ
05828	GENERAL INSTRUMENT CORP GOVERNMENT SYSTEMS DIV	600 W JOHN ST	HICKSVILLE NY 11802
07716	TRW INC TRW IRC FIXED RESISTORS/BURLINGTON	2850 MT PLEASANT AVE	BURLINGTON IA 52601
09353	C AND K COMPONENTS INC	15 RIVERDALE AVE	NEWTON MA 02158–1057
09922	BURNDY CORP	RICHARDS AVE	NORWALK CT 06852
1W344	UNITED CHEMI–CON INC	9801 W HIGGINS SUITE 430	ROSEMONT IL 60018–4704
11236	CTS CORP BERNE DIV THICK FILM PRODUCTS GROUP	406 PARR ROAD	BERNE IN 46711–9506
12294	MURATA ERIE NORTH AMERICA INC DIV OF MURATA ERIE	5 FRASER AVE	TRENTON ONT CAN K8V 5S1
12697	CLAROSTAT MFG CO INC	LOWER WASHINGTON ST	DOVER NH 03820
12887	PERMACOR ALTAIR	9540 TULLEY AVE	OAK LAWN IL 60453–3073
12954	MICROSEMI CORP – SCOTTSDALE	8700 E THOMAS RD P O BOX 1390	SCOTTSDALE AZ 85252
14301	ANDERSON ELECTRONICS INC	310 PENN ST PO BOX 89	HOLLIDAYSBURG PA 16648–2009
14552	MICROSEMI CORP	2830 S FAIRVIEW ST	SANTA ANA CA 92704–5948
14752	ELECTRO CUBE INC	1710 S DEL MAR AVE	SAN GABRIEL CA 91776–3825
14936	GENERAL INSTRUMENT CORP DISCRETE SEMI CONDUCTOR DIV	600 W JOHN ST	HICKSVILLE NY 11802
15454	KETEMA RODAN DIVISION	2900 BLUE STAR STREET	ANAHEIM CA 92806–2591
18324	SIGNETICS CORP MILITARY PRODUCTS DIV	4130 S MARKET COURT	SACRAMENTO CA 95834–1222
19701	PHILIPS COMPONENTS DISCRETE PRODUCTS DIV RESISTIVE PRODUCTS FACILITY AIRPORT ROAD	PO BOX 760	MINERAL WELLS TX 76067–0760
2N936	VISHAY SPRAGUE INC	678 MAIN STREET RT 109	SANFORD ME 04073
20462	PREM MAGNETICS INC	3519 N CHAPEL HILL	MCHENRY IL 60050–2504
22526	DU PONT E I DE NEMOURS AND CO INC DU PONT ELECTRONICS DEPT	515 FISHING CREEK RD	NEW CUMBERLAND PA 17070–3007
24165	SPRAGUE ELECTRIC CO	267 LOWELL ROAD	HUDSON NH 03051
24355	ANALOG DEVICES INC	RT 1 INDUSTRIAL PK PO BOX 9106	NORWOOD MA 02062
24546	BRADFORD ELECTRONICS	550 HIGH ST	BRADFORD PA 16701–3737

CROSS INDEX – MFR. CODE NUMBER TO MANUFACTURER

Mfr. Code	Manufacturer	Address	City, State, Zip Code
25088	SIEMENS CORP	186 WOOD AVE S	ISELIN NJ 08830–2704
27014	NATIONAL SEMICONDUCTOR CORP	2900 SEMICONDUCTOR DR	SANTA CLARA CA 95051–0606
27264	MOLEX INC	2222 WELLINGTON COURT	LISLE IL 60532–1613
31471	AMERICAN MICRO SYSTEMS INC	3800 HOMESTEAD RD	SANTA CLARA CA 95051–4542
31745	ROGERS CORP FLEXIBLE CIRCUITS DIV	WILLIAMS FIELD AND DOBSON RD PO BOX 4000	CHANDLER AZ 85224
31918	ITT SCHADOW INC	8081 WALLACE RD	EDEN PRAIRIE MN 55344–2224
32997	BOURNS INC TRIMPOT DIV	1200 COLUMBIA AVE	RIVERSIDE CA 92507–2114
34335	ADVANCED MICRO DEVICES	901 THOMPSON PL	SUNNYVALE CA 94086–4518
34649	INTEL CORP SALES OFFICE /ST4–2/	3065 BOWERS AVE	SANTA CLARA CA 95051
34899	FAIR–RITE PRODUCTS CORP	1 COMMERCIAL ROW	WALLKILL NY 12589
50088	SGS–THOMSON MICROELECTRONICS INC	1310 ELECTRONICS DR	CARROLLTON TX 75006–6905
50434	HEWLETT–PACKARD CO OPTOELECTRONICS DIV	370 W TRIMBLE RD	SAN JOSE CA 95131
51406	MURATA ERIE NORTH AMERICA INC HEADQUARTERS AND GEORGIA OPERATIONS	2200 LAKE PARK DR	SMYRNA GA 30080
52769	SPRAGUE–GOODMAN ELECTRONICS INC	134 FULTON AVE	GARDEN CITY PARK NY 11040–5352
53387	MINNESOTA MINING MFG CO	PO BOX 2963	AUSTIN TX 78769–2963
54937	DEYOUNG MANUFACTURING INC	12920 NE 125TH WAY	KIRKLAND WA 98034–7716
55680	NICHICON /AMERICA/ CORP	927 E STATE PKY	SCHAUMBURG IL 60195–4526
56637	RCD COMPONENTS INC	520 E INDUSTRIAL PARK DR	MANCHESTER NH 03103
56845	DALE ELECTRONICS INC	2300 RIVERSIDE BLVD PO BOX 74	NORFOLK NE 68701–2242
57668	ROHM CORP	8 WHATNEY PO BOX 19515	IRVINE CA 92713
58050	TEKA PRODUCTS INC	45 SALEM ST	PROVIDENCE RI 02907
59660	TUSONIX INC	7741 N BUSINESS PARK DR PO BOX 37144	TUCSON AZ 85740–7144
61271	FUJITSU MICROELECTRONICS INC	2985 KIFER RD	SANTA CLARA CA 95051–0802
61857	SAN–0 INDUSTRIAL CORP	85 ORVILLE DR PO BOX 511	BOHEMIA LONG ISLAND NY 11716–2501
62786	HITACHI AMERICA LTD	1800 BERING DRIVE	SAN JOSE CA 95122
66891	BKC INTERNATIONAL ELECTRONIC INC	6 LAKE ST PO BOX 1436	LAWRENCE MA 01841–3011
7W718	MARQUARDT SWITCHES INC	2711 ROUTH 20 EAST	CAZENOVIA NY 13035–1219
71400	BUSSMANN DIV OF COOPER INDUSTRIES INC	114 OLD STATE RD PO BOX 14460	ST LOUIS MO 63178
71590	CRL COMPONENTS INC	HWY 20 W PO BOX 858	FORT DODGE IA 50501

CROSS INDEX – MFR. CODE NUMBER TO MANUFACTURER

Mfr. Code	Manufacturer	Address	City, State, Zip Code
73138	BECKMAN INDUSTRIAL CORP BECKMAN ELECTRONIC TECHNOLOGIES SUB OF EMERSON ELECTRIC	4141 PALM ST	FULLERTON CA 92635
75042	IRC ELECTRONIC COMPONENTS PHILADELPHIA DIV TRW FIXED RESISTORS	401 N BROAD ST	PHILADELPHIA PA 19108–1001
75498	MULTICOMP INC	3005 SW 154TH TERRACE #3	BEAVERTON OR 97006
76854	OAK/GRIGSBY AN OAK INDUSTRIES INC CO	88 N DUGAN ROAD PO BOX 890	SUGAR GROVE IL 60544–0890
80009	TEKTRONIX INC	14150 SW KARL BRAUN DR PO BOX 500	BEAVERTON OR 97077–0001
81483	INTERNATIONAL RECTIFIER	9220 SUNSET BLVD	LOS ANGELES CA 90069–3501
81855	EAGLE–PICHER INDUSTRIES INC ELECTRONICS DIV	COUPLES DEPT C AND PORTER STS PO BOX 47	JOPLIN MO 64801
84411	AMERICAN SHIZUKI CORP OGALLALA OPERATIONS	301 WEST O ST	OGALLALA NE 69153–1844
91637	DALE ELECTRONICS INC	2064 12TH AVE PO BOX 609	COLUMBUS NE 68601–3632

Component Number	Tektronix Part No.	Serial No. Effective	Dscont	Name & Description	Mfr. Code	Mfr. Part No.
A1	671-0722-00	B010100	B011085	CIRCUIT BD ASSY:MAIN	80009	671072200
A1	671-0722-05	B011086	B015823	CIRCUIT BD ASSY:MAIN	80009	671072205
A1	671-0722-07	B015824	B051078	CIRCUIT BD ASSY:MAIN	80009	671072207
A1	671-0722-10	B051079		CIRCUIT BD ASSY:MAIN	80009	671072210
A2	672-1037-12	B010100	B023343	CIRCUIT BD ASSY:LV PWR SPLY MODULE	80009	672103712
A2	672-1037-13	B023344	B051239	CIRCUIT BD ASSY:LV PWR SPLY MODULE	80009	672103713
A2	672-1037-15	B051240	B055955	CIRCUIT BD ASSY:LV PWR SPLY MODULE	80009	672103715
A2	672-1037-16	B055956		CIRCUIT BD ASSY:LV PWR SPLY MODULE	80009	672103716
A2A1	--------			CIRCUIT BD ASSY:REGULATOR (AVAILABLE AT THE 672-1037-XX LEVEL ONLY)		
A3	--------			CIRCUIT BD ASSY:INVERTER (AVAILABLE AT THE 672-1037-XX LEVEL ONLY)		
A4	670-9493-02	B010100	B049999	CIRCUIT BD ASSY:READOUT	80009	670949302
A5	670-9052-02	B010100	B049999	CIRCUIT BD ASSY:DIGITAL CONTROL (DOES NOT INCLUDE U2160 AND U2260)	80009	670905202
A5	671-0965-00	B050000	B050846	CIRCUIT BD ASSY:CONTROL/READOUT/BUFFER	80009	671096500
A5	671-0965-01	B050847	B052244	CIRCUIT BD ASSY:CONTROL/READOUT/BUFFER	80009	671096501
A5	671-0965-02	B052245	B053646	CIRCUIT BD ASSY:CONTROL/READOUT/BUFFER	80009	671096502
A5	671-0965-04	B053647	B055937	CIRCUIT BD ASSY:CONTROL/READOUT/BUFFER	80009	671096504
A5	671-0965-05	B055938		CIRCUIT BD ASSY:CONTROL/READOUT/BUFFER	80009	671096505
A6	614-0825-00			FRONT PNL ASSY:STANDARD (STANDARD)	80009	614082500
A6	614-0826-00			FRONT PNL ASSY:TV OPTION (OPTION 05)	80009	614082600
A6A1	670-9236-01			CIRCUIT BD ASSY:FRONT PANEL	80009	670923601
A8	670-7280-00			CIRCUIT BD ASSY:SCALE ILLUM	80009	670728000
A9	670-7277-09	B010100	B056317	CIRCUIT BD ASSY:HIGH VOLTAGE	80009	670727709
A9	670-7277-11	B056318		CIRCUIT BD ASSY:HIGH VOLTAGE	80009	670727711
A13	307-1154-00			PASSIVE NETWORK:CRT TERMINATOR	80009	307115400
A14	670-8000-00			CIRCUIT BD ASSY:DYNAMIC CENTERING	80009	670800000

Component Number	Tektronix Part No.	Serial No. Effective	Dscont	Name & Description	Mfr. Code	Mfr. Part No.
A1	671-0722-00	B010100	B011085	CIRCUIT BD ASSY:MAIN	80009	671072200
A1	671-0722-05	B011086	B015823	CIRCUIT BD ASSY:MAIN	80009	671072205
A1	671-0722-07	B015824	B051078	CIRCUIT BD ASSY:MAIN	80009	671072207
A1	671-0722-10	B051079		CIRCUIT BD ASSY:MAIN	80009	671072210
A1A11	119-2342-05	B010100	B011485	ATTENUATOR,VAR:PROGRAMMABLE 1X-100X	80009	119234205
A1A11	119-2342-07	B011486	B016128	ATTENUATOR,VAR:1X-100X,CHANNEL 1	80009	119234207
A1A11	119-2342-09	B016129		ATTENUATOR,VAR:1X-100X,CHANNEL 1	80009	119234209
A1A12	119-2342-06	B010100	B011485	ATTENUATOR,VAR:PROGRAMMABLE 1X-100X	80009	119234206
A1A12	119-2342-08	B011486	B016128	ATTENUATOR,VAR:1X-100X,CHANNEL 2	80009	119234208
A1A12	119-2342-10	B016129		ATTENUATOR,VAR:1X-100X,CHANNEL 2	80009	119234210
A1C100	283-0000-00			CAP,FXD,CER DI:0.001UF,+100-0%,500V	51406	DD06450Y5U102P5
A1C102	290-0973-00			CAP,FXD,ELCTLT:100UF,20%,25VDC	0J9R5	CEUSM1E101
A1C103	281-0812-00			CAP,FXD,CER DI:1000PF,10%,100V	04222	SA101C102KAA
A1C105	281-0064-00			CAP,VAR,PLASTIC:0.25-1.5PF,600V	52769	ER-530-013
A1C106	281-0775-01			CAP,FXD,CER DI:0.1UF,20%,50V	04222	SA105E104MAA
A1C107	290-0943-02			CAP,FXD,ELCTLT:47UF,20%,25V	1W344	SME25VB47RM5X11
A1C108	281-0775-01			CAP,FXD,CER DI:0.1UF,20%,50V	04222	SA105E104MAA
A1C109	281-0909-00			CAP,FXD,CER DI:0.022UF,20%,50V	04222	SA105C223MAA
A1C110	281-0909-00			CAP,FXD,CER DI:0.022UF,20%,50V	04222	SA105C223MAA
A1C113	281-0909-00			CAP,FXD,CER DI:0.022UF,20%,50V	04222	SA105C223MAA
A1C114	290-0943-02			CAP,FXD,ELCTLT:47UF,20%,25V	1W344	SME25VB47RM5X11
A1C115	281-0761-00			CAP,FXD,CER DI:27PF,5%,100V	04222	SA102A270JAA
A1C116	281-0814-00			CAP,FXD,CER DI:100 PF,10%,100V	TK1743	CGB101KEN
A1C117	281-0775-01			CAP,FXD,CER DI:0.1UF,20%,50V	04222	SA105E104MAA
A1C118	281-0205-00			CAP,VAR,PLASTIC:5.5-65 PF,100V	TK1727	2222-808-32659
A1C119	281-0909-00			CAP,FXD,CER DI:0.022UF,20%,50V	04222	SA105C223MAA
A1C120	281-0909-00			CAP,FXD,CER DI:0.022UF,20%,50V	04222	SA105C223MAA
A1C121	290-0943-02			CAP,FXD,ELCTLT:47UF,20%,25V	1W344	SME25VB47RM5X11
A1C125	281-0775-01			CAP,FXD,CER DI:0.1UF,20%,50V	04222	SA105E104MAA
A1C130	290-0776-01			CAP,FXD,ELCTLT:22UF,20%,10WVDC	55680	UVX1A220MAA1TD
A1C152	290-0943-02			CAP,FXD,ELCTLT:47UF,20%,25V	1W344	SME25VB47RM5X11
A1C154	281-0812-00			CAP,FXD,CER DI:1000PF,10%,100V	04222	SA101C102KAA
A1C171	281-0851-00			CAP,FXD,CER DI:180PF,5%,100VDC	04222	SA101A181JAA
A1C175	285-1301-01			CAP,FXD,MTLZD:0.47UF,10%,50V	TK1913	MKS 2 .47/50 OR
A1C176	285-1348-00			CAP,FXD,MTLZD:0.22UF,10%,63V	TK1913	MKS2 0.22 MFD 1
A1C177	285-1348-00			CAP,FXD,MTLZD:0.22UF,10%,63V	TK1913	MKS2 0.22 MFD 1
A1C179	285-1301-01			CAP,FXD,MTLZD:0.47UF,10%,50V	TK1913	MKS 2 .47/50 OR
A1C180	285-1301-01			CAP,FXD,MTLZD:0.47UF,10%,50V	TK1913	MKS 2 .47/50 OR
A1C181	285-1348-00			CAP,FXD,MTLZD:0.22UF,10%,63V	TK1913	MKS2 0.22 MFD 1
A1C182	285-1348-00			CAP,FXD,MTLZD:0.22UF,10%,63V	TK1913	MKS2 0.22 MFD 1

Component Number	Tektronix Part No.	Serial No. Effective	Dscont	Name & Description	Mfr. Code	Mfr. Part No.
A1C183	285-1348-00			CAP,FXD,MTLZD:0.22UF,10%,63V	TK1913	MKS2 0.22 MFD 1
A1C184	281-0775-01			CAP,FXD,CER DI:0.1UF,20%,50V	04222	SA105E104MAA
A1C185	290-0943-02			CAP,FXD,ELCTLT:47UF,20%,25V	1W344	SME25VB47RM5X11
A1C200	283-0000-00			CAP,FXD,CER DI:0.001UF,+100-0%,500V	51406	DD06450Y5U102P5
A1C202	281-0812-00			CAP,FXD,CER DI:1000PF,10%,100V	04222	SA101C102KAA
A1C203	281-0773-00			CAP,FXD,CER DI:0.01UF,10%,100V	TK1743	CGB103KEX
A1C205	281-0064-00			CAP,VAR,PLASTIC:0.25-1.5PF,600V	52769	ER-530-013
A1C207	281-0909-00			CAP,FXD,CER DI:0.022UF,20%,50V	04222	SA105C223MAA
A1C209	281-0909-00			CAP,FXD,CER DI:0.022UF,20%,50V	04222	SA105C223MAA
A1C210	281-0909-00			CAP,FXD,CER DI:0.022UF,20%,50V	04222	SA105C223MAA
A1C211	281-0909-00			CAP,FXD,CER DI:0.022UF,20%,50V	04222	SA105C223MAA
A1C217	281-0775-01			CAP,FXD,CER DI:0.1UF,20%,50V	04222	SA105E104MAA
A1C218	290-0943-02			CAP,FXD,ELCTLT:47UF,20%,25V	1W344	SME25VB47RM5X11
A1C219	281-0775-01			CAP,FXD,CER DI:0.1UF,20%,50V	04222	SA105E104MAA
A1C220	281-0775-01			CAP,FXD,CER DI:0.1UF,20%,50V	04222	SA105E104MAA
A1C221	290-0943-02			CAP,FXD,ELCTLT:47UF,20%,25V	1W344	SME25VB47RM5X11
A1C223	281-0812-00			CAP,FXD,CER DI:1000PF,10%,100V	04222	SA101C102KAA
A1C225	281-0775-01			CAP,FXD,CER DI:0.1UF,20%,50V	04222	SA105E104MAA
A1C301	281-0775-01			CAP,FXD,CER DI:0.1UF,20%,50V	04222	SA105E104MAA
A1C302	281-0775-01			CAP,FXD,CER DI:0.1UF,20%,50V	04222	SA105E104MAA
A1C307	290-0943-02			CAP,FXD,ELCTLT:47UF,20%,25V	1W344	SME25VB47RM5X11
A1C310	281-0909-00			CAP,FXD,CER DI:0.022UF,20%,50V	04222	SA105C223MAA
A1C311	281-0909-00			CAP,FXD,CER DI:0.022UF,20%,50V	04222	SA105C223MAA
A1C325	290-0943-02			CAP,FXD,ELCTLT:47UF,20%,25V	1W344	SME25VB47RM5X11
A1C329	281-0773-00			CAP,FXD,CER DI:0.01UF,10%,100V	TK1743	CGB103KEX
A1C332	281-0773-00			CAP,FXD,CER DI:0.01UF,10%,100V	TK1743	CGB103KEX
A1C336	290-0943-02			CAP,FXD,ELCTLT:47UF,20%,25V	1W344	SME25VB47RM5X11
A1C351	281-0909-00			CAP,FXD,CER DI:0.022UF,20%,50V	04222	SA105C223MAA
A1C402	281-0762-00			CAP,FXD,CER DI:27PF,20%,100V	04222	SA102A270MAA
A1C403	281-0221-00			CAP,VAR,CER DI:2-10PF,100V	59660	513-016 A 2.0-1
A1C404	281-0221-00			CAP,VAR,CER DI:2-10PF,100V	59660	513-016 A 2.0-1
A1C412	281-0762-00			CAP,FXD,CER DI:27PF,20%,100V	04222	SA102A270MAA
A1C415	281-0909-00			CAP,FXD,CER DI:0.022UF,20%,50V	04222	SA105C223MAA
A1C458	281-0909-00			CAP,FXD,CER DI:0.022UF,20%,50V	04222	SA105C223MAA
A1C460	281-0909-00			CAP,FXD,CER DI:0.022UF,20%,50V	04222	SA105C223MAA
A1C464	281-0763-00			CAP,FXD,CER DI:47PF,10%,100V	04222	SA102A470KAA
A1C466	281-0763-00			CAP,FXD,CER DI:47PF,10%,100V	04222	SA102A470KAA
A1C478	281-0759-00			CAP,FXD,CER DI:22PF,10%,100V	04222	SA102A220KAA
A1C480	281-0775-01			CAP,FXD,CER DI:0.1UF,20%,50V	04222	SA105E104MAA
A1C487	281-0823-00			CAP,FXD,CER DI:470PF,10%,50V	04222	SA101A471KAA

Component Number	Tektronix Part No.	Serial No. Effective	Dscont	Name & Description	Mfr. Code	Mfr. Part No.
A1C488	281-0814-00			CAP,FXD,CER DI:100 PF,10%,100V	TK1743	CGB101KEN
A1C500	281-0909-00			CAP,FXD,CER DI:0.022UF,20%,50V	04222	SA105C223MAA
A1C501	281-0909-00			CAP,FXD,CER DI:0.022UF,20%,50V	04222	SA105C223MAA
A1C511	281-0759-00	B053089		CAP,FXD,CER DI:22PF,10%,100V	04222	SA102A220KAA
A1C512	290-0246-00			CAP,FXD,ELCTLT:3.3UF,10%,15V	12954	D3R3EA15K1
A1C513	285-1301-01			CAP,FXD,MTLZD:0.47UF,10%,50V	TK1913	MKS 2 .47/50 OR
A1C520	281-0814-00	B010100	B016035	CAP,FXD,CER DI:100 PF,10%,100V	TK1743	CGB101KEN
A1C520	281-0777-00	B016036		CAP,FXD,CER DI:51PF,5%,100V	04222	SA102A510JAA
A1C520	281-0814-00	B050000	B050255	CAP,FXD,CER DI:100 PF,10%,100V	TK1743	CGB101KEN
A1C520	281-0777-00	B050256		CAP,FXD,CER DI:51PF,5%,100V	04222	SA102A510JAA
A1C521	281-0909-00			CAP,FXD,CER DI:0.022UF,20%,50V	04222	SA105C223MAA
A1C528	281-0775-01			CAP,FXD,CER DI:0.1UF,20%,50V	04222	SA105E104MAA
A1C536	290-0246-00			CAP,FXD,ELCTLT:3.3UF,10%,15V	12954	D3R3EA15K1
A1C537	281-0812-00			CAP,FXD,CER DI:1000PF,10%,100V	04222	SA101C102KAA
A1C544	281-0814-00	B010100	B016035	CAP,FXD,CER DI:100 PF,10%,100V	TK1743	CGB101KEN
A1C544	281-0777-00	B016036		CAP,FXD,CER DI:51PF,5%,100V	04222	SA102A510JAA
A1C544	281-0814-00	B050000	B050255	CAP,FXD,CER DI:100 PF,10%,100V	TK1743	CGB101KEN
A1C544	281-0777-00	B050256		CAP,FXD,CER DI:51PF,5%,100V	04222	SA102A510JAA
A1C601	281-0270-00			CAP,VAR,CER DI:9-90PF,50V	52769	GKG90012
A1C617	281-0773-00			CAP,FXD,CER DI:0.01UF,10%,100V	TK1743	CGB103KEX
A1C625	281-0909-00			CAP,FXD,CER DI:0.022UF,20%,50V	04222	SA105C223MAA
A1C645	281-0773-00			CAP,FXD,CER DI:0.01UF,10%,100V	TK1743	CGB103KEX
A1C650	281-0823-00			CAP,FXD,CER DI:470PF,10%,50V	04222	SA101A471KAA
A1C653	281-0819-00			CAP,FXD,CER DI:33 PF,5%,50V	04222	SA102A330JAA
A1C669	281-0775-01			CAP,FXD,CER DI:0.1UF,20%,50V	04222	SA105E104MAA
A1C675	281-0775-01			CAP,FXD,CER DI:0.1UF,20%,50V	04222	SA105E104MAA
A1C678	281-0791-00	B051079		CAP,FXD,CER DI:270PF,10%,100V	04222	SA102C271KAA
A1C707	281-0808-00			CAP,FXD,CER DI:7 PF,20%,100V	04222	SA102A7RODAA
A1C708	285-0676-01			CAP,FXD,PLASTIC:0.1UF,3,5%,35V	75498	285-0676-01
A1C709	285-1060-00			CAP,FXD,PLASTIC:10UF,3%,25V	75498	285-1060-00
A1C710	281-0775-01			CAP,FXD,CER DI:0.1UF,20%,50V	04222	SA105E104MAA
A1C712	285-1301-01			CAP,FXD,MTLZD:0.47UF,10%,50V	TK1913	MKS 2 .47/50 OR
A1C722	281-0909-00			CAP,FXD,CER DI:0.022UF,20%,50V	04222	SA105C223MAA
A1C723	290-0943-02			CAP,FXD,ELCTLT:47UF,20%,25V	1W344	SME25VB47RM5X11
A1C730	281-0909-00			CAP,FXD,CER DI:0.022UF,20%,50V	04222	SA105C223MAA
A1C731	290-0944-01			CAP,FXD,ELCTLT:220UF,20%,10V	0J9R5	CEBSM1C221M-T4
A1C732	290-0944-01			CAP,FXD,ELCTLT:220UF,20%,10V	0J9R5	CEBSM1C221M-T4
A1C733	290-0943-02			CAP,FXD,ELCTLT:47UF,20%,25V	1W344	SME25VB47RM5X11
A1C735	281-0823-00			CAP,FXD,CER DI:470PF,10%,50V	04222	SA101A471KAA
A1C738	290-0943-02			CAP,FXD,ELCTLT:47UF,20%,25V	1W344	SME25VB47RM5X11

Component Number	Tektronix Part No.	Serial No. Effective	Dscont	Name & Description	Mfr. Code	Mfr. Part No.
A1C740	290-0943-02			CAP,FXD,ELCTLT:47UF,20%,25V	1W344	SME25VB47RM5X11
A1C742	281-0812-00			CAP,FXD,CER DI:1000PF,10%,100V	04222	SA101C102KAA
A1C744	281-0775-01			CAP,FXD,CER DI:0.1UF,20%,50V	04222	SA105E104MAA
A1C755	281-0759-00			CAP,FXD,CER DI:22PF,10%,100V	04222	SA102A220KAA
A1C803	281-0909-00			CAP,FXD,CER DI:0.022UF,20%,50V	04222	SA105C223MAA
A1C804	281-0811-00			CAP,FXD,CER DI:10PF,10%,100V	04222	SA102A100KAA
A1C805	281-0823-00			CAP,FXD,CER DI:470PF,10%,50V	04222	SA101A471KAA
A1C806	283-0156-00			CAP,FXD,CER DI:1000PF,+80-20%,200V	04222	SR152E102ZAA
A1C808	281-0757-00			CAP,FXD,CER DI:10PF,20%,100V	04222	SA102A100MAA
A1C809	281-0819-00			CAP,FXD,CER DI:33 PF,5%,50V	04222	SA102A330JAA
A1C810	281-0909-00			CAP,FXD,CER DI:0.022UF,20%,50V	04222	SA105C223MAA
A1C811	281-0909-00			CAP,FXD,CER DI:0.022UF,20%,50V	04222	SA105C223MAA
A1C817	281-0812-00			CAP,FXD,CER DI:1000PF,10%,100V	04222	SA101C102KAA
A1C819	281-0909-00			CAP,FXD,CER DI:0.022UF,20%,50V	04222	SA105C223MAA
A1C822	281-0775-01			CAP,FXD,CER DI:0.1UF,20%,50V	04222	SA105E104MAA
A1C823	281-0909-00			CAP,FXD,CER DI:0.022UF,20%,50V	04222	SA105C223MAA
A1C830	281-0814-00			CAP,FXD,CER DI:100 PF,10%,100V	TK1743	CGB101KEN
A1C848	281-0909-00			CAP,FXD,CER DI:0.022UF,20%,50V	04222	SA105C223MAA
A1C849	281-0775-01			CAP,FXD,CER DI:0.1UF,20%,50V	04222	SA105E104MAA
A1C850	281-0909-00			CAP,FXD,CER DI:0.022UF,20%,50V	04222	SA105C223MAA
A1C851	285-1301-01			CAP,FXD,MTLZD:0.47UF,10%,50V	TK1913	MKS 2 .47/50
A1C852	285-1301-01			CAP,FXD,MTLZD:0.47UF,10%,50V	TK1913	MKS 2 .47/50
A1C853	285-1301-01			CAP,FXD,MTLZD:0.47UF,10%,50V	TK1913	MKS 2 .47/50
A1C854	285-1301-01			CAP,FXD,MTLZD:0.47UF,10%,50V	TK1913	MKS 2 .47/50
A1C900	281-0763-00			CAP,FXD,CER DI:47PF,10%,100V	04222	SA102A470KAA
A1C903	281-0909-00			CAP,FXD,CER DI:0.022UF,20%,50V	04222	SA105C223MAA
A1C907	281-0808-00			CAP,FXD,CER DI:7 PF,20%,100V	04222	SA102A7RODAA
A1C908	285-0752-03			CAP,FXD,PLASTIC:1UF,3%,50V	75498	ORDER BY DESC
A1C912	281-0909-00			CAP,FXD,CER DI:0.022UF,20%,50V	04222	SA105C223MAA
A1C933	281-0909-00			CAP,FXD,CER DI:0.022UF,20%,50V	04222	SA105C223MAA
A1C938	281-0909-00			CAP,FXD,CER DI:0.022UF,20%,50V	04222	SA105C223MAA
A1C940	281-0909-00			CAP,FXD,CER DI:0.022UF,20%,50V	04222	SA105C223MAA
A1C943	281-0909-00			CAP,FXD,CER DI:0.022UF,20%,50V	04222	SA105C223MAA
A1C947	281-0759-00			CAP,FXD,CER DI:22PF,10%,100V	04222	SA102A220KAA
A1C957	290-0804-00			CAP,FXD,ELCTLT:10UF,+50-20%,25V	0J9R5	CEUSM1E100
A1C958	281-0909-00			CAP,FXD,CER DI:0.022UF,20%,50V	04222	SA105C223MAA
A1C966	281-0783-00	B010100	B050220	CAP,FXD,CER DI:0.1 UF 20%,100V	04222	SA301E104MAA
A1C966	285-1356-00	B050221		CAP,FXD,PLASTIC:0.047UF,20%,250V	84411	X665 473M250
A1C967	281-0783-00	B010100	B050220	CAP,FXD,CER DI:0.1 UF 20%,100V	04222	SA301E104MAA
A1C967	285-1356-00	B050221		CAP,FXD,PLASTIC:0.047UF,20%,250V	84411	X665 473M250

Component Number	Tektronix Part No.	Serial No. Effective	Dscont	Name & Description	Mfr. Code	Mfr. Part No.
A1C972	281-0756-00			CAP,FXD,CER DI:2.2PF,+/-0.5PF,200V	04222	SA102A2R2DAA
A1C973	281-0909-00			CAP,FXD,CER DI:0.022UF,20%,50V	04222	SA105C223MAA
A1C975	281-0775-01			CAP,FXD,CER DI:0.1UF,20%,50V	04222	SA105E104MAA
A1C976	283-1001-00			CAP,FXD,CER DI:0.03UF,50VDC (UNDER U975)	31745	1ROGUQ15A
A1C977	290-0246-00			CAP,FXD,ELCTLT:3.3UF,10%,15V	12954	D3R3EA15K1
A1C980	281-0909-00			CAP,FXD,CER DI:0.022UF,20%,50V	04222	SA105C223MAA
A1C981	283-1000-00			CAP,FXD,CER DI:0.02UF,50VDC (UNDER U980)	31745	1ROGUQO1A
A1C982	281-0759-00			CAP,FXD,CER DI:22PF,10%,100V	04222	SA102A220KAA
A1C985	281-0775-01			CAP,FXD,CER DI:0.1UF,20%,50V	04222	SA105E104MAA
A1C988	281-0909-00			CAP,FXD,CER DI:0.022UF,20%,50V	04222	SA105C223MAA
A1C990	281-0909-00			CAP,FXD,CER DI:0.022UF,20%,50V	04222	SA105C223MAA
A1C995	281-0810-00			CAP,FXD,CER DI:5.6PF,+/-0.5PF,100V	04222	SA102A5R6DAA
A1CR100	152-0323-01			DIODE,SIG:,;50V,1.25VF,225MA,25PA,2.0PF	14552	MT5127
A1CR101	152-0323-01			DIODE,SIG:,;50V,1.25VF,225MA,25PA,2.0PF	14552	MT5127
A1CR107	152-0066-00			DIODE,RECT:,;400V,1A,IFSM = 30A	05828	GP10G-020
A1CR130	152-0141-02			DIODE,SIG:,ULTRA FAST;40V,150MA,4NS,2PF	27014	FDH9427
A1CR131	152-0141-02			DIODE,SIG:,ULTRA FAST;40V,150MA,4NS,2PF	27014	FDH9427
A1CR140	152-0141-02			DIODE,SIG:,ULTRA FAST;40V,150MA,4NS,2PF	27014	FDH9427
A1CR141	152-0141-02			DIODE,SIG:,ULTRA FAST;40V,150MA,4NS,2PF	27014	FDH9427
A1CR142	152-0141-02			DIODE,SIG:,ULTRA FAST;40V,150MA,4NS,2PF	27014	FDH9427
A1CR143	152-0141-02			DIODE,SIG:,ULTRA FAST;40V,150MA,4NS,2PF	27014	FDH9427
A1CR144	152-0141-02			DIODE,SIG:,ULTRA FAST;40V,150MA,4NS,2PF	27014	FDH9427
A1CR145	152-0141-02			DIODE,SIG:,ULTRA FAST;40V,150MA,4NS,2PF	27014	FDH9427
A1CR146	152-0141-02			DIODE,SIG:,ULTRA FAST;40V,150MA,4NS,2PF	27014	FDH9427
A1CR147	152-0141-02			DIODE,SIG:,ULTRA FAST;40V,150MA,4NS,2PF	27014	FDH9427
A1CR148	152-0141-02			DIODE,SIG:,ULTRA FAST;40V,150MA,4NS,2PF	27014	FDH9427
A1CR149	152-0141-02			DIODE,SIG:,ULTRA FAST;40V,150MA,4NS,2PF	27014	FDH9427
A1CR150	152-0141-02			DIODE,SIG:,ULTRA FAST;40V,150MA,4NS,2PF	27014	FDH9427
A1CR151	152-0141-02			DIODE,SIG:,ULTRA FAST;40V,150MA,4NS,2PF	27014	FDH9427
A1CR152	152-0141-02			DIODE,SIG:,ULTRA FAST;40V,150MA,4NS,2PF	27014	FDH9427
A1CR153	152-0141-02			DIODE,SIG:,ULTRA FAST;40V,150MA,4NS,2PF	27014	FDH9427
A1CR154	152-0141-02			DIODE,SIG:,ULTRA FAST;40V,150MA,4NS,2PF	27014	FDH9427
A1CR155	152-0141-02			DIODE,SIG:,ULTRA FAST;40V,150MA,4NS,2PF	27014	FDH9427
A1CR161	152-0141-02			DIODE,SIG:,ULTRA FAST;40V,150MA,4NS,2PF	27014	FDH9427
A1CR162	152-0141-02			DIODE,SIG:,ULTRA FAST;40V,150MA,4NS,2PF	27014	FDH9427
A1CR163	152-0141-02			DIODE,SIG:,ULTRA FAST;40V,150MA,4NS,2PF	27014	FDH9427
A1CR180	152-0141-02			DIODE,SIG:,ULTRA FAST;40V,150MA,4NS,2PF	27014	FDH9427
A1CR181	152-0141-02			DIODE,SIG:,ULTRA FAST;40V,150MA,4NS,2PF	27014	FDH9427
A1CR200	152-0323-01			DIODE,SIG:,;50V,1.25VF,225MA,25PA,2.0PF	14552	MT5127

Component Number	Tektronix Part No.	Serial No. Effective	Dscont	Name & Description	Mfr. Code	Mfr. Part No.
A1CR201	152-0323-01			DIODE,SIG:,;50V,1.25VF,225MA,25PA,2.0PF	14552	MT5127
A1CR354	152-0141-02			DIODE,SIG:,ULTRA FAST;40V,150MA,4NS,2PF	27014	FDH9427
A1CR360	152-0141-02			DIODE,SIG:,ULTRA FAST;40V,150MA,4NS,2PF	27014	FDH9427
A1CR460	152-0141-02			DIODE,SIG:,ULTRA FAST;40V,150MA,4NS,2PF	27014	FDH9427
A1CR461	152-0141-02			DIODE,SIG:,ULTRA FAST;40V,150MA,4NS,2PF	27014	FDH9427
A1CR476	152-0141-02			DIODE,SIG:,ULTRA FAST;40V,150MA,4NS,2PF	27014	FDH9427
A1CR484	152-0141-02			DIODE,SIG:,ULTRA FAST;40V,150MA,4NS,2PF	27014	FDH9427
A1CR485	152-0141-02			DIODE,SIG:,ULTRA FAST;40V,150MA,4NS,2PF	27014	FDH9427
A1CR495	152-0141-02			DIODE,SIG:,ULTRA FAST;40V,150MA,4NS,2PF	27014	FDH9427
A1CR503	152-0141-02			DIODE,SIG:,ULTRA FAST;40V,150MA,4NS,2PF	27014	FDH9427
A1CR538	152-0141-02			DIODE,SIG:,ULTRA FAST;40V,150MA,4NS,2PF	27014	FDH9427
A1CR539	152-0141-02			DIODE,SIG:,ULTRA FAST;40V,150MA,4NS,2PF	27014	FDH9427
A1CR600	152-0141-02			DIODE,SIG:,ULTRA FAST;40V,150MA,4NS,2PF	27014	FDH9427
A1CR601	152-0141-02			DIODE,SIG:,ULTRA FAST;40V,150MA,4NS,2PF	27014	FDH9427
A1CR616	152-0141-02			DIODE,SIG:,ULTRA FAST;40V,150MA,4NS,2PF	27014	FDH9427
A1CR619	152-0141-02			DIODE,SIG:,ULTRA FAST;40V,150MA,4NS,2PF	27014	FDH9427
A1CR620	152-0141-02			DIODE,SIG:,ULTRA FAST;40V,150MA,4NS,2PF	27014	FDH9427
A1CR621	152-0141-02			DIODE,SIG:,ULTRA FAST;40V,150MA,4NS,2PF	27014	FDH9427
A1CR652	152-0141-02			DIODE,SIG:,ULTRA FAST;40V,150MA,4NS,2PF	27014	FDH9427
A1CR653	152-0141-02			DIODE,SIG:,ULTRA FAST;40V,150MA,4NS,2PF	27014	FDH9427
A1CR707	152-0141-02			DIODE,SIG:,ULTRA FAST;40V,150MA,4NS,2PF	27014	FDH9427
A1CR741	152-0951-00			DIODE,SIG:SCHTKY,;60V,2.25PF	50088	1N6263
A1CR742	152-0951-00			DIODE,SIG:SCHTKY,;60V,2.25PF	50088	1N6263
A1CR746	152-0141-02			DIODE,SIG:,ULTRA FAST;40V,150MA,4NS,2PF	27014	FDH9427
A1CR747	152-0141-02			DIODE,SIG:,ULTRA FAST;40V,150MA,4NS,2PF	27014	FDH9427
A1CR752	152-0075-00			SEMICOND DVC,DI:SW,GE,22V,80MW,DO-7	66891	G866
A1CR753	152-0141-02			DIODE,SIG:,ULTRA FAST;40V,150MA,4NS,2PF	27014	FDH9427
A1CR807	152-0574-00			DIODE,SIG:,ULTRA FAST;120V,150MA,4NS	27014	FDH9876
A1CR811	152-0141-02			DIODE,SIG:,ULTRA FAST;40V,150MA,4NS,2PF	27014	FDH9427
A1CR850	152-0141-02			DIODE,SIG:,ULTRA FAST;40V,150MA,4NS,2PF	27014	FDH9427
A1CR941	152-0141-02			DIODE,SIG:,ULTRA FAST;40V,150MA,4NS,2PF	27014	FDH9427
A1CR942	152-0141-02			DIODE,SIG:,ULTRA FAST;40V,150MA,4NS,2PF	27014	FDH9427
A1CR950	152-0141-02			DIODE,SIG:,ULTRA FAST;40V,150MA,4NS,2PF	27014	FDH9427
A1CR951	152-0141-02			DIODE,SIG:,ULTRA FAST;40V,150MA,4NS,2PF	27014	FDH9427
A1CR956	152-0141-02			DIODE,SIG:,ULTRA FAST;40V,150MA,4NS,2PF	27014	FDH9427
A1CR966	152-0574-00			DIODE,SIG:,ULTRA FAST;120V,150MA,4NS	27014	FDH9876
A1CR972	152-0574-00			DIODE,SIG:,ULTRA FAST;120V,150MA,4NS	27014	FDH9876
A1CR987	152-0574-00			DIODE,SIG:,ULTRA FAST;120V,150MA,4NS	27014	FDH9876
A1CR995	152-0061-00			DIODE,SIG:,;200V,0.1A,700NS,4.0PF	27014	FDH2161
A1DL100	119-1490-01			DELAY LINE,ELEC:73NS,150 OHM	80009	119149001

Component Number	Tektronix Part No.	Serial No. Effective	Dscont	Name & Description	Mfr. Code	Mfr. Part No.
A1E900	276-0712-00			CORE,EM:BALUN,FERRITE	34899	2843002402
A1J1	131-0608-00			TERMINAL,PIN:PRESSFIT/PCB,;MALE,STR (QUANTITY OF 3)	22526	48283-018
A1J9	131-0608-00			TERMINAL,PIN:PRESSFIT/PCB,;MALE,STR	22526	48283-018
A1J11	131-0608-00			TERMINAL,PIN:PRESSFIT/PCB,;MALE,STR (QUANTITY OF 3)	22526	48283-018
A1J100	131-0608-00			TERMINAL,PIN:PRESSFIT/PCB,;MALE,STR (QUANTITY OF 2)	22526	48283-018
A1J101	131-3520-00			CONN,HDR:PCB,;MALE,STR,2 X 5,0.1 CTR	53387	2510-6002UB
A1J102	131-3520-00			CONN,HDR:PCB,;MALE,STR,2 X 5,0.1 CTR	53387	2510-6002UB
A1J103	131-0608-00			TERMINAL,PIN:PRESSFIT/PCB,;MALE,STR (QUANTITY OF 2)	22526	48283-018
A1J104	131-0608-00			TERMINAL,PIN:PRESSFIT/PCB,;MALE,STR (QUANTITY OF 4)	22526	48283-018
A1J105	131-0608-00			TERMINAL,PIN:PRESSFIT/PCB,;MALE,STR (QUANTITY OF 2)	22526	48283-018
A1J109	131-0608-00			TERMINAL,PIN:PRESSFIT/PCB,;MALE,STR (QUANTITY OF 2)	22526	48283-018
A1J120	131-3152-00			CONN,HDR:PCB,;MALE,STR,2 X 8,0.1 CTR	53387	2516-6002UB
A1J181	131-0608-00			TERMINAL,PIN:PRESSFIT/PCB,;MALE,STR (QUANTITY OF 2)	22526	48283-018
A1J411	131-3362-00			CONN,HDR:PCB,;MALE,STR,2 X 13,0.1 CTR	53387	2526-6002UB
A1J511	131-3362-00			CONN,HDR:PCB,;MALE,STR,2 X 13,0.1 CTR	53387	2526-6002UB
A1J512	131-3364-00			CONN,HDR:PCB,;MALE,STR,2 X 17,0.1 CTR	53387	2534-6002UB
A1J949	131-0608-00			TERMINAL,PIN:PRESSFIT/PCB,;MALE,ST (QUANTITY OF 2)	22526	48283-018
A1L101	108-1251-00			COIL,RF:FXD,2.7UH,10%	0JR03	108-1251-00
A1L107	108-1251-00			COIL,RF:FXD,2.7UH,10%	0JR03	108-1251-00
A1L113	108-1251-00			COIL,RF:FXD,2.7UH,10%	0JR03	108-1251-00
A1L115	108-0317-00			COIL,RF:FIXED,15 UH	0JR03	108-0317-00
A1L120	108-1251-00			COIL,RF:FXD,2.7UH,10%	0JR03	108-1251-00
A1L200	108-0509-00			COIL,RF:FIXED,2.45UH +/-10%	0JR03	ORDER BY DESC
A1L219	108-1251-00			COIL,RF:FXD,2.7UH,10%	0JR03	108-1251-00
A1L220	108-1251-00			COIL,RF:FXD,2.7UH,10%	0JR03	108-1251-00
A1L307	108-1251-00			COIL,RF:FXD,2.7UH,10%	0JR03	108-1251-00
A1L325	108-1251-00			COIL,RF:FXD,2.7UH,10%	0JR03	108-1251-00
A1L336	108-1251-00			COIL,RF:FXD,2.7UH,10%	0JR03	108-1251-00
A1L403	108-0552-00			COIL,RF:FIXED,80NH	0JR03	108-0552-00
A1L521	108-1251-00			COIL,RF:FXD,2.7UH,10%	0JR03	108-1251-00
A1L605	108-0170-01			COIL,RF:FIXED,360NH	0JR03	108-0170-01
A1L606	108-0736-00			COIL,RF:FIXED,828NH	0JR03	ORDER BY DESC
A1L607	108-0736-00			COIL,RF:FIXED,828NH	0JR03	ORDER BY DESC
A1L608	108-0170-01			COIL,RF:FIXED,360NH	0JR03	108-0170-01

Component Number	Tektronix Part No.	Serial No. Effective	Dscont	Name & Description	Mfr. Code	Mfr. Part No.
A1L609	108-0509-00			COIL,RF:FIXED,2.45UH +/-10%	0JR03	ORDER BY DESC
A1L610	108-0509-00			COIL,RF:FIXED,2.45UH +/-10%	0JR03	ORDER BY DESC
A1L619	108-0736-00			COIL,RF:FIXED,828NH	0JR03	ORDER BY DESC
A1L628	108-0327-00			COIL,RF:FIXED,48NH	0JR03	ORDER BY DESC
A1L633	108-0327-00			COIL,RF:FIXED,48NH	0JR03	ORDER BY DESC
A1L644	114-0353-00			COIL,RF:VARIABLE,0.6-1.0UH	0JR03	ORDER BY DESC
A1L733	108-1251-00			COIL,RF:FXD,2.7UH,10%	0JR03	108-1251-00
A1L738	108-0317-00			COIL,RF:FIXED,15 UH	0JR03	108-0317-00
A1L740	108-0317-00			COIL,RF:FIXED,15 UH	0JR03	108-0317-00
A1L743	108-1251-00			COIL,RF:FXD,2.7UH,10%	0JR03	108-1251-00
A1L938	108-1251-00			COIL,RF:FXD,2.7UH,10%	0JR03	108-1251-00
A1L973	108-1251-00			COIL,RF:FXD,2.7UH,10%	0JR03	108-1251-00
A1L980	108-1251-00			COIL,RF:FXD,2.7UH,10%	0JR03	108-1251-00
A1LR101	108-0325-00			COIL,RF:FIXED,489NH	0JR03	108-0325-00
A1LR107	108-0325-00			COIL,RF:FIXED,489NH	0JR03	108-0325-00
A1LR180	108-0602-00			COIL,RF:FIXED,45NH	0JR03	108-0602-00
A1LR201	108-0325-00			COIL,RF:FIXED,489NH	0JR03	108-0325-00
A1LR218	108-0330-00			COIL,RF:FIXED,403NH	0JR03	108-0330-00
A1LR219	108-0330-00			COIL,RF:FIXED,403NH	0JR03	108-0330-00
A1LR280	108-0602-00			COIL,RF:FIXED,45NH	0JR03	108-0602-00
A1Q130	151-0622-00			TRANSISTOR,SIG:BIPOLAR,PNP;40V,1.0A,50MHZ	04713	MPS6727
A1Q131	151-0622-00			TRANSISTOR,SIG:BIPOLAR,PNP;40V,1.0A,50MHZ	04713	MPS6727
A1Q154	151-0188-00			TRANSISTOR,SIG:BIPOLAR,PNP;40V,200MA	04713	2N3906
A1Q155	151-0188-00			TRANSISTOR,SIG:BIPOLAR,PNP;40V,200MA	04713	2N3906
A1Q190	151-0190-00			TRANSISTOR,SIG:BIPOLAR,NPN;40V,200MA	04713	2N3904
A1Q460	151-0198-01			TRANSISTOR,SIG:BIPOLAR,NPN;15V,50MA (LOCATIONS A & B)	04713	SPS6897M
A1Q550	151-0190-00			TRANSISTOR,SIG:BIPOLAR,NPN;40V,200MA	04713	2N3904
A1Q600	151-0190-00			TRANSISTOR,SIG:BIPOLAR,NPN;40V,200MA	04713	2N3904
A1Q623	151-0190-00			TRANSISTOR,SIG:BIPOLAR,NPN;40V,200MA	04713	2N3904
A1Q624	151-1025-00			TRANSISTOR,SIG:JFET,N-CH;6V,15MA,4.5MS	TK1864	SNJ3014
A1Q645	151-0188-00			TRANSISTOR,SIG:BIPOLAR,PNP;40V,200MA	04713	2N3906
A1Q700	151-0190-00			TRANSISTOR,SIG:BIPOLAR,NPN;40V,200MA	04713	2N3904
A1Q709	151-0736-00			TRANSISTOR,SIG:BIPOLAR,NPN;40V,600MA	0JR04	2N4401
A1Q710	151-0736-00			TRANSISTOR,SIG:BIPOLAR,NPN;40V,600MA	0JR04	2N4401
A1Q740	151-0223-00	B011086	B015823	TRANSISTOR,SIG:BIPOLAR,NPN;15V,500MA	04713	MPS2369A
A1Q741	151-0190-00			TRANSISTOR,SIG:BIPOLAR,NPN;40V,200MA	04713	2N3904
A1Q742	151-0190-00			TRANSISTOR,SIG:BIPOLAR,NPN;40V,200MA	04713	2N3904
A1Q743	151-0188-00			TRANSISTOR,SIG:BIPOLAR,PNP;40V,200MA	04713	2N3906
A1Q745	151-0188-00			TRANSISTOR,SIG:BIPOLAR,PNP;40V,200MA	04713	2N3906
A1Q941	151-0188-00			TRANSISTOR,SIG:BIPOLAR,PNP;40V,200MA	04713	2N3906

Component Number	Tektronix Part No.	Serial No. Effective	Dscont	Name & Description	Mfr. Code	Mfr. Part No.
A1Q942	151-0188-00	B010100	B010516	TRANSISTOR,SIG:BIPOLAR,PNP;40V,200MA	04713	2N3906
A1Q942	151-0221-00	B010517		TRANSISTOR,SIG:BIPOLAR,PNP;12V,80M	04713	MPS4258(EL8345)
A1R100	315-0474-00			RES,FXD,FILM:470K OHM,5%,0.25W	TK1727	SFR25 2322-181
A1R101	322-3235-00			RES,FXD:METAL FILM;2.74K OHM,1%,0.2W,TC=100	91637	CCF501G27400F
A1R102	322-3235-00			RES,FXD:METAL FILM;2.74K OHM,1%,0.2W,TC=100	91637	CCF501G27400F
A1R112	322-3097-00			RES,FXD:METAL FILM;100 OHM,1%,0.2W,TC=100	91637	CCF501G100R0F
A1R114	321-0130-03			RES,FXD,FILM:221 OHM,0.25%,0.125W,TC=T2	19701	5033RC221ROC
A1R115	321-0146-00			RES,FXD,FILM:324 OHM,1%,0.125W,TC=T0	91637	CMF55116G324R0F
A1R117	321-0320-00			RES,FXD,FILM:21.0K OHM,1%,0.125W,TC=T0	91637	CMF55116G21001F
A1R118	321-0212-00			RES,FXD,FILM:1.58K OHM,1%,0.125W,TC=T0	91637	CMF55116G15800F
A1R121	313-1121-00			RES,FXD,FILM:120 OHM,5%,0.2W	91637	CCF501G120ROJ
A1R123	313-1622-00			RES,FXD,FILM:6.2K OHM,5%,0.2W	91637	CCF501G62000J
A1R125	301-0361-00			RES,FXD,FILM:360 OHM,5%,0.5W	19701	5053CX360R0J
A1R129	322-3097-00			RES,FXD:METAL FILM;100 OHM,1%,0.2W,TC=100	91637	CCF501G100R0F
A1R130	313-1561-00			RES,FXD,FILM:560 OHM,5%,0.2W	91637	CCF50-2-56OROJ
A1R131	313-1561-00			RES,FXD,FILM:560 OHM,5%,0.2W	91637	CCF50-2-56OROJ
A1R133	322-3201-00			RES,FXD:METAL FILM;1.21K OHM,1%,0.2W,TC=100	91637	CCF501G12100F
A1R135	322-3193-00			RES,FXD:METAL FILM;1K OHM,1%,0.2W,TC=100	91637	CCF501G10000F
A1R136	313-1622-00			RES,FXD,FILM:6.2K OHM,5%,0.2W	91637	CCF501G62000J
A1R140	313-1471-00			RES,FXD,FILM:470 OHM,5%,0.2W	91637	CCF50-2-470R0J
A1R141	313-1471-00			RES,FXD,FILM:470 OHM,5%,0.2W	91637	CCF50-2-470R0J
A1R142	313-1391-00			RES,FXD,FILM:390 OHM,5%,0.2W	91637	CCF50-2-390R0J
A1R143	313-1391-00			RES,FXD,FILM:390 OHM,5%,0.2W	91637	CCF50-2-390R0J
A1R144	307-0108-00			RES,FXD,CMPSN:6.8 OHM,5%,0.25W	01121	CB68G5
A1R149	322-3289-00			RES,FXD:METAL FILM;10K OHM,1%,0.2W,TC=100	91637	CCF50G10001F
A1R150	322-3193-00			RES,FXD:METAL FILM;1K OHM,1%,0.2W,TC=100	91637	CCF501G10000F
A1R152	313-1242-00			RES,FXD,FILM:2.4K OHM,5%,0.2W	91637	CCF50-2-24000J
A1R153	322-3289-00			RES,FXD:METAL FILM;10K OHM,1%,0.2W,TC=100	91637	CCF50G10001F
A1R154	322-3242-00			RES,FXD,FILM:3.24K OHM,1%,0.2W,TC=T0	91637	CCF501G32400F
A1R155	321-0250-00			RES,FXD,FILM:3.92K OHM,1%,0.125W,TC=T0	91637	CMF55116G39200F
A1R156	322-3242-00			RES,FXD,FILM:3.24K OHM,1%,0.2W,TC=T0	91637	CCF501G32400F
A1R159	322-3242-00			RES,FXD,FILM:3.24K OHM,1%,0.2W,TC=T0	91637	CCF501G32400F
A1R161	322-3293-00			RES,FXD:METAL FILM;11K OHM,1%,0.2W	91637	CCF50G11001F
A1R162	322-3293-00			RES,FXD:METAL FILM;11K OHM,1%,0.2W	91637	CCF50G11001F
A1R163	322-3242-00			RES,FXD,FILM:3.24K OHM,1%,0.2W,TC=T0	91637	CCF501G32400F
A1R165	313-1822-00			RES,FXD,FILM:8.2K,OHM,5%,0.2W	91637	CCF50-2-82000J
A1R173	313-1471-00			RES,FXD,FILM:470 OHM,5%,0.2W	91637	CCF50-2-470R0J
A1R180	322-3242-00			RES,FXD,FILM:3.24K OHM,1%,0.2W,TC=T0	91637	CCF501G32400F
A1R181	322-3289-00			RES,FXD:METAL FILM;10K OHM,1%,0.2W,TC=100	91637	CCF50G10001F
A1R182	322-3242-00			RES,FXD,FILM:3.24K OHM,1%,0.2W,TC=T0	91637	CCF501G32400F

Component Number	Tektronix Part No.	Serial No. Effective	Dscont	Name & Description	Mfr. Code	Mfr. Part No.
A1R183	322-3289-00			RES,FXD:METAL FILM;10K OHM,1%,0.2W,TC=100	91637	CCF50G10001F
A1R190	322-3289-00			RES,FXD:METAL FILM;10K OHM,1%,0.2W,TC=100	91637	CCF50G10001F
A1R191	322-3289-00			RES,FXD:METAL FILM;10K OHM,1%,0.2W,TC=100	91637	CCF50G10001F
A1R192	322-3289-00			RES,FXD:METAL FILM;10K OHM,1%,0.2W,TC=100	91637	CCF50G10001F
A1R193	322-3193-00			RES,FXD:METAL FILM;1K OHM,1%,0.2W,TC=100	91637	CCF501G10000F
A1R194	322-3289-00			RES,FXD:METAL FILM;10K OHM,1%,0.2W,TC=100	91637	CCF50G10001F
A1R195	322-3143-00			RES,FXD,FILM:301 OHM,1%,0.2W,TC=T0	91637	CCF501G301ROF
A1R196	322-3277-00			RES,FXD,FILM:7.5K OHM,1%,0.2W,TC=T0	91637	CCF501G75000F
A1R197	322-3265-00			RES,FXD:METAL FILM;5.62K OHM,1%,0.2W,TC=100	91637	CCF501G56200F
A1R198	321-1700-04			RES,FXD,FILM:10.44K OHM,0.1%,0.125W,TC=T2	19701	5033RC10K440B
A1R199	321-1700-04			RES,FXD,FILM:10.44K OHM,0.1%,0.125W,TC=T2	19701	5033RC10K440B
A1R200	315-0474-00			RES,FXD,FILM:470K OHM,5%,0.25W	TK1727	SFR25 2322-181
A1R201	322-3235-00			RES,FXD:METAL FILM;2.74K OHM,1%,0.2W,TC=100	91637	CCF501G27400F
A1R202	322-3235-00			RES,FXD:METAL FILM;2.74K OHM,1%,0.2W,TC=100	91637	CCF501G27400F
A1R216	313-1121-00			RES,FXD,FILM:120 OHM,5%,0.2W	91637	CCF501G120ROJ
A1R217	321-0320-00			RES,FXD,FILM:21.0K OHM,1%,0.125W,TC=T0	91637	CMF55116G21001F
A1R218	321-0212-00			RES,FXD,FILM:1.58K OHM,1%,0.125W,TC=T0	91637	CMF55116G15800F
A1R225	301-0361-00			RES,FXD,FILM:360 OHM,5%,0.5W	19701	5053CX360R0J
A1R230	322-3226-00			RES,FXD:METAL FILM;2.21K OHM,1%,0.2W,TC=100	91637	CCF501G22100F
A1R231	322-3226-00			RES,FXD:METAL FILM;2.21K OHM,1%,0.2W,TC=100	91637	CCF501G22100F
A1R232	322-3226-00			RES,FXD:METAL FILM;2.21K OHM,1%,0.2W,TC=100	91637	CCF501G22100F
A1R301	315-0240-00			RES,FXD,FILM:24 OHM,5%,0.25W	TK1727	SFR25 2322-181
A1R302	315-0240-00			RES,FXD,FILM:24 OHM,5%,0.25W	TK1727	SFR25 2322-181
A1R303	322-3097-00			RES,FXD:METAL FILM;100 OHM,1%,0.2W,TC=100	91637	CCF501G100R0F
A1R304	315-0101-00			RES,FXD,FILM:100 OHM,5%,0.25W	TK1727	SFR25 2322-181
A1R311	315-0101-00			RES,FXD,FILM:100 OHM,5%,0.25W	TK1727	SFR25 2322-181
A1R312	322-3097-00			RES,FXD:METAL FILM;100 OHM,1%,0.2W,TC=100	91637	CCF501G100R0F
A1R329	322-3097-00			RES,FXD:METAL FILM;100 OHM,1%,0.2W,TC=100	91637	CCF501G100R0F
A1R332	322-3097-00			RES,FXD:METAL FILM;100 OHM,1%,0.2W,TC=100	91637	CCF501G100R0F
A1R353	322-3239-00			RES,FXD,FILM:3.01K OHM,1%,0.2W,TC=T0	91637	CCF501G30100F
A1R361	322-3265-00			RES,FXD:METAL FILM;5.62K OHM,1%,0.2W,TC=100	91637	CCF501G56200F
A1R401	322-3202-00			RES,FXD,FILM:1.24K OHM,1%,0.2W,TC=T0	91637	CCF50-1G12400F
A1R402	322-3085-00			RES,FXD:METAL FILM;75 OHM,1%,0.2W,TC=100	91637	CCF501G75R00F
A1R403	311-0607-00			RES,VAR,NONWW:TRMR,10K OHM,0.5W	73138	82PR10K-25D
A1R404	313-1200-00			RES,FXD,FILM:20 OHM,5%,0.2W	91637	CCF50-2-20R00J
A1R405	313-1200-00			RES,FXD,FILM:20 OHM,5%,0.2W	91637	CCF50-2-20R00J
A1R411	311-0978-01			RES,VAR,NONWW:TRMR,250 OHM,0.5W	32997	3329H-K28-251
A1R412	322-3085-00			RES,FXD:METAL FILM;75 OHM,1%,0.2W,TC=100	91637	CCF501G75R00F
A1R416	322-3193-00			RES,FXD:METAL FILM;1K OHM,1%,0.2W,TC=100	91637	CCF501G10000F
A1R417	311-2234-00			RES,VAR,TRMR:CERMET;5K OHM,20%,0.5W	TK2073	GF06UT2 502 M L

Component Number	Tektronix Part No.	Serial No. Effective	Dscont	Name & Description	Mfr. Code	Mfr. Part No.
A1R430	322-3085-00			RES,FXD:METAL FILM;75 OHM,1%,0.2W,TC=100	91637	CCF501G75R00F
A1R450	321-0310-00			RES,FXD,FILM:16.5K OHM,1%,0.125W,TC=T0	91637	CMF55116G16501F
A1R451	321-0275-00			RES,FXD,FILM:7.15K OHM,1%,0.125W,TC=T0	91637	CMF55116G71500F
A1R452	321-0310-00			RES,FXD,FILM:16.5K OHM,1%,0.125W,TC=T0	91637	CMF55116G16501F
A1R453	321-0275-00			RES,FXD,FILM:7.15K OHM,1%,0.125W,TC=T0	91637	CMF55116G71500F
A1R454	321-0310-00			RES,FXD,FILM:16.5K OHM,1%,0.125W,TC=T0	91637	CMF55116G16501F
A1R455	321-0310-00			RES,FXD,FILM:16.5K OHM,1%,0.125W,TC=T0	91637	CMF55116G16501F
A1R456	321-0333-00			RES,FXD,FILM:28.7K OHM,1%,0.125W,TC=T0	91637	CMF55116G28701F
A1R457	321-0275-00			RES,FXD,FILM:7.15K OHM,1%,0.125W,TC=T0	91637	CMF55116G71500F
A1R458	322-3085-00			RES,FXD:METAL FILM;75 OHM,1%,0.2W,TC=100	91637	CCF501G75R00F
A1R459	322-3085-00			RES,FXD:METAL FILM;75 OHM,1%,0.2W,TC=100	91637	CCF501G75R00F
A1R460	321-0062-00			RES,FXD,FILM:43.2 OHM,0.5%,0.125W,TC=T0	91637	CMF55-116-G43R2
A1R461	322-3139-00			RES,FXD:METAL FILM;274 OHM,1%,0.2W,TC=100	91637	CCF501G274ROF
A1R462	322-3201-00			RES,FXD:METAL FILM;1.21K OHM,1%,0.2W,TC=100	91637	CCF501G12100F
A1R463	322-3193-00			RES,FXD:METAL FILM;1K OHM,1%,0.2W,TC=100	91637	CCF501G10000F
A1R464	321-0063-00			RES,FXD,FILM:44.2 OHM,0.5%,0.125W,TC=T0	91637	CMF55116G44R20F
A1R465	322-3193-00			RES,FXD:METAL FILM;1K OHM,1%,0.2W,TC=100	91637	CCF501G10000F
A1R468	321-0287-00			RES,FXD,FILM:9.53K OHM,1%,0.125W,TC=T0	91637	CMF55116G95300F
A1R469	313-1200-00			RES,FXD,FILM:20 OHM,5%,0.2W	91637	CCF50-2-20R00J
A1R470	322-3322-00			RES,FXD:METAL FILM;22.1K OHM,1%,0.2W,TC=100	91637	CCF501G22101F
A1R471	322-3322-00			RES,FXD:METAL FILM;22.1K OHM,1%,0.2W,TC=100	91637	CCF501G22101F
A1R473	313-1471-00			RES,FXD,FILM:470 OHM,5%,0.2W	91637	CCF50-2-470R0J
A1R476	322-3085-00			RES,FXD:METAL FILM;75 OHM,1%,0.2W,TC=100	91637	CCF501G75R00F
A1R477	322-3258-00			RES,FXD:METAL FILM;4.75K OHM,1%,0.2W,TC=100	56845	CCF50-2-G4751FT
A1R478	321-0193-03			RES,FXD,FILM:1K OHM,0.25%,0.125W,TC=T2	19701	5033RC1K000C
A1R479	322-3193-00			RES,FXD:METAL FILM;1K OHM,1%,0.2W,TC=100	91637	CCF501G10000F
A1R480	321-0375-00			RES,FXD,FILM:78.7K OHM,1%,0.125W,TC=T0	91637	CMF55116G78701F
A1R481	321-0347-00			RES,FXD,FILM:40.2K OHM,1%,0.125W,TC=T0	91637	CMF55116G40201F
A1R482	313-1471-00			RES,FXD,FILM:470 OHM,5%,0.2W	91637	CCF50-2-470R0J
A1R483	321-0347-00			RES,FXD,FILM:40.2K OHM,1%,0.125W,TC=T0	91637	CMF55116G40201F
A1R484	322-3222-00			RES,FXD:METAL FILM;2K OHM,1%,0.2W,TC=100	91637	CCF501G20000F
A1R485	322-3222-00			RES,FXD:METAL FILM;2K OHM,1%,0.2W,TC=100	91637	CCF501G20000F
A1R486	321-0347-00			RES,FXD,FILM:40.2K OHM,1%,0.125W,TC=T0	91637	CMF55116G40201F
A1R487	321-0130-03			RES,FXD,FILM:221 OHM,0.25%,0.125W,TC=T2	19701	5033RC221ROC
A1R488	321-1216-03			RES,FXD,FILM:1.76K OHM,0.25%,0.125W,TC=T2	19701	5033RC1K760C
A1R489	321-1216-03			RES,FXD,FILM:1.76K OHM,0.25%,0.125W,TC=T2	19701	5033RC1K760C
A1R490	321-0375-00			RES,FXD,FILM:78.7K OHM,1%,0.125W,TC=T0	91637	CMF55116G78701F
A1R491	322-3193-00			RES,FXD:METAL FILM;1K OHM,1%,0.2W,TC=100	91637	CCF501G10000F
A1R492	321-0193-03			RES,FXD,FILM:1K OHM,0.25%,0.125W,TC=T2	19701	5033RC1K000C
A1R493	322-3258-00			RES,FXD:METAL FILM;4.75K OHM,1%,0.2W,TC=100	56845	CCF50-2-G4751FT

Component Number	Tektronix Part No.	Serial No. Effective	Dscont	Name & Description	Mfr. Code	Mfr. Part No.
A1R494	313-1201-00			RES,FXD,FILM:200 OHM,5%,0.2W	91637	CCF50-2-200R0J
A1R495	322-3085-00			RES,FXD:METAL FILM;75 OHM,1%,0.2W,TC=100	91637	CCF501G75R00F
A1R496	322-3293-00			RES,FXD:METAL FILM;11K OHM,1%,0.2W,TC=100	91637	CCF50G11001F
A1R497	313-1821-00			RES,FXD,FILM:820 OHM,5%,0.2W	91637	CCF50-2-820R0J
A1R498	313-1821-00			RES,FXD,FILM:820 OHM,5%,0.2W	91637	CCF50-2-820R0J
A1R501	322-3097-00			RES,FXD:METAL FILM;100 OHM,1%,0.2W,TC=100	91637	CCF501G100R0F
A1R502	313-1622-00			RES,FXD,FILM:6.2K OHM,5%,0.2W	91637	CCF501G62000J
A1R503	322-3289-00			RES,FXD:METAL FILM;10K OHM,1%,0.2W,TC=100	91637	CCF50G10001F
A1R504	322-3289-00			RES,FXD:METAL FILM;10K OHM,1%,0.2W,TC=100	91637	CCF50G10001F
A1R511	321-0320-00			RES,FXD,FILM:21.0K OHM,1%,0.125W,TC=T0	91637	CMF55116G21001F
A1R512	322-3293-00			RES,FXD:METAL FILM;11K OHM,1%,0.2W,TC=100	91637	CCF50G11001F
A1R513	313-1470-00			RES,FXD,FILM:47 OHM,5%,0.2W	91637	CCF50-2-47R00J
A1R518	313-1680-00			RES,FXD,FILM:68 OHM,0.2W,5%	91637	CCF50-2-68R00J
A1R519	313-1621-00			RES,FXD,FILM:620 OHM,5%,0.2W	91637	CCF50-2-620ROJ
A1R520	313-1393-00			RES,FXD,FILM:39K OHM,5%,0.2W	91637	CCF50-2-39001J
A1R521	322-3085-00			RES,FXD:METAL FILM;75 OHM,1%,0.2W,TC=100	91637	CCF501G75R00F
A1R527	322-3085-00			RES,FXD:METAL FILM;75 OHM,1%,0.2W,TC=100	91637	CCF501G75R00F
A1R529	313-1561-00			RES,FXD,FILM:560 OHM,5%,0.2W	91637	CCF50-2-56OROJ
A1R537	322-3097-00			RES,FXD:METAL FILM;100 OHM,1%,0.2W,TC=100	91637	CCF501G100R0F
A1R538	313-1621-00			RES,FXD,FILM:620 OHM,5%,0.2W	91637	CCF50-2-620ROJ
A1R542	313-1680-00			RES,FXD,FILM:68 OHM,0.2W,5%	91637	CCF50-2-68R00J
A1R543	313-1621-00			RES,FXD,FILM:620 OHM,5%,0.2W	91637	CCF50-2-620ROJ
A1R544	313-1393-00			RES,FXD,FILM:39K OHM,5%,0.2W	91637	CCF50-2-39001J
A1R545	322-3085-00			RES,FXD:METAL FILM;75 OHM,1%,0.2W,TC=100	91637	CCF501G75R00F
A1R550	313-1471-00			RES,FXD,FILM:470 OHM,5%,0.2W	91637	CCF50-2-470R0J
A1R551	321-1682-07			RES,FXD,FILM:5.7K OHM,0.1%,0.125W,TC=T9	19701	5033RE5K700B
A1R552	321-0641-07			RES,FXD,FILM:1.8K OHM,0.1,0.125W,TC=T9	19701	5033RE1K800B
A1R553	322-3210-00			RES,FXD:METAL FILM;1.5K OHM,1%,0.2W,TC=100	91637	CCF501G15000F
A1R554	322-3213-00			RES,FXD,FILM:1.62K OHM,1%,0.2W,TC=T	91637	CCF501G16200F
A1R555	321-0294-00			RES,FXD,FILM:11.3K OHM,1%,0.125W,TC=T0	91637	CMF55116G11301F
A1R556	322-3282-00			RES,FXD,FILM:8.45K OHM,1%,0.2W,TC=T0	91637	CCF501G84500F
A1R557	321-0808-07			RES,FXD,FILM:300 OHM,0.1%,0.125W,TC=T9	19701	5033RE300R0B
A1R558	321-0657-07			RES,FXD,FILM:60 OHM,0.1%,0.125W,TC=T9	57668	RB14BZE 60E
A1R560	313-1621-00			RES,FXD,FILM:620 OHM,5%,0.2W	91637	CCF50-2-620ROJ
A1R600	313-1270-00			RES,FXD,FILM:27 OHM 5%,0.2W	91637	CCF50-2-27R00J
A1R601	313-1750-00			RES,FXD,FILM:75 OHM,5%,0.2W	91637	CCF50-2-75R00J
A1R602	313-1470-00			RES,FXD,FILM:47 OHM,5%,0.2W	91637	CCF50-2-47R00J
A1R605	311-2227-00			RES,VAR,NONWW:TRMR,100 OHM,20%,0.5W	TK2073	GF06UT2 101 M L
A1R606	313-1100-00			RES,FXD,FILM:10 OHM,5%,0.2W	91637	CCF50-2-10R00J
A1R607	313-1100-00			RES,FXD,FILM:10 OHM,5%,0.2W	91637	CCF50-2-10R00J

Component Number	Tektronix Part No.	Serial No. Effective	Dscont	Name & Description	Mfr. Code	Mfr. Part No.
A1R614	322-3289-00			RES,FXD:METAL FILM;10K OHM,1%,0.2W,TC=100	91637	CCF50G10001F
A1R615	322-3289-00			RES,FXD:METAL FILM;10K OHM,1%,0.2W,TC=100	91637	CCF50G10001F
A1R617	322-3193-00			RES,FXD:METAL FILM;1K OHM,1%,0.2W,TC=100	91637	CCF501G10000F
A1R618	311-2234-00			RES,VAR,TRMR:CERMET;5K OHM,20%,0.5W	TK2073	GF06UT2 502 M L
A1R619	315-0510-00			RES,FXD,FILM:51 OHM,5%,0.25W	TK1727	SFR25 2322-181
A1R620	322-3258-00			RES,FXD:METAL FILM;4.75K OHM,1%,0.2W,TC=100	56845	CCF50-2-G4751FT
A1R622	322-3226-00			RES,FXD:METAL FILM;2.21K OHM,1%,0.2W,TC=100	91637	CCF501G22100F
A1R623	322-3097-00			RES,FXD:METAL FILM;100 OHM,1%,0.2W,TC=100	91637	CCF501G100R0F
A1R624	313-1100-00			RES,FXD,FILM:10 OHM,5%,0.2W	91637	CCF50-2-10R00J
A1R637	322-3222-00			RES,FXD:METAL FILM;2K OHM,1%,0.2W,TC=100	91637	CCF501G20000F
A1R638	311-2234-00			RES,VAR,TRMR:CERMET;5K OHM,20%,0.5W	TK2073	GF06UT2 502 M L
A1R639	311-2230-00			RES,VAR,TRMR:CERMET;500 OHM,20%,0.5W	TK2073	GF06UT2 501 M L
A1R642	313-1432-00			RES,FXD,FILM:4.3K OHM,5%,0.2W	91637	CCF50-2-43000J
A1R643	322-3085-00			RES,FXD:METAL FILM;75 OHM,1%,0.2W,TC=100	91637	CCF501G75R00F
A1R644	322-3258-00			RES,FXD:METAL FILM;4.75K OHM,1%,0.2W,TC=100	56845	CCF50-2-G4751FT
A1R645	321-0625-00			RES,FXD,FILM:5.88K OHM,1%,0.125W,TC=T0	56845	CMF-55116G58800
A1R646	321-0252-00			RES,FXD,FILM:4.12K OHM,1%,0.125W,TC=T0	91637	CMF55116G41200F
A1R649	322-3243-00			RES,FXD:METAL FILM;3.32K OHM,1%,0.2W,TC=100	91637	CCF50-1-G33200F
A1R650	322-3318-00			RES,FXD:METAL FILM;20K OHM,1%,0.2W,TC=100	91637	CCF501G20001F
A1R651	322-3189-00			RES,FXD,FILM:909 OHM,1%,0.2W,TC=T0	91637	CCF501G909FOR
A1R652	315-0274-00			RES,FXD,FILM:270K OHM,5%,0.25W	TK1727	SFR25 2322-181
A1R653	322-3193-00			RES,FXD:METAL FILM;1K OHM,1%,0.2W,TC=100	91637	CCF501G10000F
A1R655	322-3193-00			RES,FXD:METAL FILM;1K OHM,1%,0.2W,TC=100	91637	CCF501G10000F
A1R658	321-0278-00			RES,FXD,FILM:7.68K OHM,1%,0.125W,TC=T0	91637	CMF55116G76800F
A1R659	322-3197-00			RES,FXD,FILM:1.1K OHM,1%,0.2W,TC=T0	91637	CCF501G11000F
A1R669	321-0995-00			RES,FXD,FILM:549K OHM,1%,0.125W,TC=T0	91637	CMF55116G54902F
A1R670	322-3193-00			RES,FXD:METAL FILM;1K OHM,1%,0.2W,TC=100	91637	CCF501G10000F
A1R671	322-3289-00			RES,FXD:METAL FILM;10K OHM,1%,0.2W,TC=100	91637	CCF50G10001F
A1R678	322-3097-00			RES,FXD:METAL FILM;100 OHM,1%,0.2W,TC=100	91637	CCF501G100R0F
A1R700	313-1221-00			RES,FXD,FILM:220 OHM,5%,0.2W	91637	CCF50-2-220R0J
A1R701	322-3223-00			RES,FXD,FILM:2.05K OHM,1%,0.2W,TC=T0	91637	CCF501G20500F
A1R702	321-0252-00			RES,FXD,FILM:4.12K OHM,1%,0.125W,TC=T0	91637	CMF55116G41200F
A1R707	322-3201-00			RES,FXD:METAL FILM;1.21K OHM,1%,0.2W,TC=100	91637	CCF501G12100F
A1R708	313-1242-00			RES,FXD,FILM:2.4K OHM,5%,0.2W	91637	CCF50-2-24000J
A1R709	322-3258-00			RES,FXD:METAL FILM;4.75K OHM,1%,0.2W,TC=100	56845	CCF50-2-G4751FT
A1R710	315-0396-00			RES,FXD,FILM:39M OHM,5%,0.25W	01121	CB3965
A1R713	313-1822-00			RES,FXD,FILM:8.2K,OHM,5%,0.2W	91637	CCF50-2-82000J
A1R723	321-0240-00			RES,FXD,FILM:3.09K OHM,1%,0.125W,TC=T0	91637	CMF55116G30900F
A1R724	321-0680-00			RES,FXD,FILM:35.3K OHM,0.5%,0.125W,TC=T2	19701	5033RC35K30D
A1R731	322-3306-00			RES,FXD:METAL FILM;15K OHM,1%,0.2W,TC=100	91637	CCF50-2-G1502F

Component Number	Tektronix Part No.	Serial No. Effective	Dscont	Name & Description	Mfr. Code	Mfr. Part No.
A1R732	322-3273-00			RES,FXD:METAL FILM;6.81K OHM,1%,0.2W,TC=100	91637	CCF50-2-G68100F
A1R733	322-3218-00			RES,FXD:METAL FILM;1.82K OHM,1%,0.2W,TC=100	91637	CCF501G18200F
A1R734	313-1221-00			RES,FXD,FILM:220 OHM,5%,0.2W	91637	CCF50-2-220R0J
A1R735	313-1273-00			RES,FXD,FILM:27K OHM,5%,0.2W	91637	CCF50-2-27001J
A1R736	321-0217-00			RES,FXD,FILM:1.78K OHM,1%,0.125W,TC=T0	91637	CMF55116G178OOF
A1R737	322-3263-00			RES,FXD,FILM:5.36K OHM,1%,0.2W,TC=T0	56845	CCF502G5361FT
A1R738	322-3273-00			RES,FXD:METAL FILM;6.81K OHM,1%,0.2W,TC=100	91637	CCF50-2-G68100F
A1R742	322-3235-00			RES,FXD:METAL FILM;2.74K OHM,1%,0.2W,TC=100	91637	CCF501G27400F
A1R743	313-1331-00			RES,FXD,FILM:330 OHM,5%,0.2W	91637	CCF50-2-330ROJ
A1R744	322-3085-00			RES,FXD:METAL FILM;75 OHM,1%,0.2W,TC=100	91637	CCF501G75R00F
A1R745	322-3235-00			RES,FXD:METAL FILM;2.74K OHM,1%,0.2W,TC=100	91637	CCF501G27400F
A1R746	301-0470-00			RES,FXD,FILM:47 OHM,5%,0.5W	TK1727	SFR30 2322-182
A1R747	322-3193-00			RES,FXD:METAL FILM;1K OHM,1%,0.2W,TC=100	91637	CCF501G10000F
A1R748	322-3289-00			RES,FXD:METAL FILM;10K OHM,1%,0.2W,TC=100	91637	CCF50G10001F
A1R749	313-1333-00			RES,FXD,FILM:33K OHM,5%,0.2W	91637	CCF50-2-33001J
A1R750	313-1151-00			RES,FXD,FILM:150 OHM,5%,0.2W	91637	CCF50-2-150R0J
A1R753	313-1242-00			RES,FXD,FILM:2.4K OHM,5%,0.2W	91637	CCF50-2-24000J
A1R754	313-1333-00			RES,FXD,FILM:33K OHM,5%,0.2W	91637	CCF50-2-33001J
A1R755	322-3193-00			RES,FXD:METAL FILM;1K OHM,1%,0.2W,TC=100	91637	CCF501G10000F
A1R757	313-1151-00			RES,FXD,FILM:150 OHM,5%,0.2W	91637	CCF50-2-150R0J
A1R800	321-0147-00			RES,FXD,FILM:332 OHM,1%,0.125W,TC=T0	91637	CMF55116G332R0F
A1R801	311-2230-00			RES,VAR,TRMR:CERMET;500 OHM,20%,0.5W	TK2073	GF06UT2 501 M L
A1R802	311-2234-00			RES,VAR,TRMR:CERMET;5K OHM,20%,0.5W	TK2073	GF06UT2 502 M L
A1R804	313-1151-00			RES,FXD,FILM:150 OHM,5%,0.2W	91637	CCF50-2-150R0J
A1R805	311-1242-00			RES,VAR,NONWW:TRMR,200K OHM,0.5W	32997	3386X-1-204
A1R806	322-3414-00			RES,FXD:METAL FILM;200K OHM,1%,0.2W,TC=100	91637	CCF501G20002F
A1R809	313-1151-00			RES,FXD,FILM:150 OHM,5%,0.2W	91637	CCF50-2-150R0J
A1R811	301-0331-00			RES,FXD,FILM:330 OHM,5%,0.5W	TK1727	SFR30 2322-182-
A1R817	313-1221-00			RES,FXD,FILM:220 OHM,5%,0.2W	91637	CCF50-2-220R0J
A1R820	321-0337-00			RES,FXD,FILM:31.6K OHM,1%,0.125W,TC=T0	91637	CMF55116G31601F
A1R821	321-0330-00			RES,FXD,FILM:26.7K OHM,1%,0.125W,TC=T0	91637	CMF55116G26701F
A1R822	322-3139-00			RES,FXD:METAL FILM;274 OHM,1%,0.2W,TC=100	91637	CCF501G274ROF
A1R823	322-3193-00			RES,FXD:METAL FILM;1K OHM,1%,0.2W,TC=100	91637	CCF501G10000F
A1R849	313-1333-00			RES,FXD,FILM:33K OHM,5%,0.2W	91637	CCF50-2-33001J
A1R850	311-2234-00			RES,VAR,TRMR:CERMET;5K OHM,20%,0.5W	TK2073	GF06UT2 502 M L
A1R852	313-1240-00			RES,FXD,FILM:24 OHM,5%,0.2W	91637	CCF50G24ROOJ
A1R853	313-1240-00			RES,FXD,FILM:24 OHM,5%,0.2W	91637	CCF50G24ROOJ
A1R855	322-3289-00			RES,FXD:METAL FILM;10K OHM,1%,0.2W,TC=100	91637	CCF50G10001F
A1R856	322-3210-00			RES,FXD:METAL FILM;1.5K OHM,1%,0.2W,TC=100	91637	CCF501G15000F
A1R858	322-3239-00			RES,FXD,FILM:3.01K OHM,1%,0.2W,TC=T0	91637	CCF501G30100F

Component Number	Tektronix Part No.	Serial No. Effective	Dscont	Name & Description	Mfr. Code	Mfr. Part No.
A1R860	311-2234-00			RES,VAR,TRMR:CERMET;5K OHM,20%,0.5W	TK2073	GF06UT2 502 M L
A1R900	322-3097-00			RES,FXD:METAL FILM;100 OHM,1%,0.2W,TC=100	91637	CCF501G100R0F
A1R901	322-3197-00			RES,FXD,FILM:1.1K OHM,1%,0.2W,TC=T0	91637	CCF501G11000F
A1R903	322-3258-00			RES,FXD:METAL FILM;4.75K OHM,1%,0.2W,TC=100	56845	CCF50-2-G4751FT
A1R904	313-1124-00			RES,FXD,FILM:120K OHM,5%,0.2W	91637	CCF50-2-12002J
A1R907	313-1471-00			RES,FXD,FILM:470 OHM,5%,0.2W	91637	CCF50-2-470R0J
A1R910	315-0396-00			RES,FXD,FILM:39M OHM,5%,0.25W	01121	CB3965
A1R912	313-1822-00			RES,FXD,FILM:8.2K,OHM,5%,0.2W	91637	CCF50-2-82000J
A1R924	322-3325-00			RES,FXD,FILM:23.7K OHM,1%,0.2W,TC=T0	91637	CCF501G23701F
A1R936	322-3225-00			RES,FXD,FILM:2.15K OHM,1%,0.2W,TC=T0	91637	CCF501G21500F
A1R937	322-3268-00			RES,FXD,FILM:6.04K OHM,1%,0.2W,TC=T0	91637	CCF501G60400F
A1R939	315-0332-00			RES,FXD,FILM:3.3K OHM,5%,0.25W	TK1727	SFR25 2322-181
A1R940	322-3097-00			RES,FXD:METAL FILM;100 OHM,1%,0.2W,TC=100	91637	CCF501G100R0F
A1R941	313-1151-00			RES,FXD,FILM:150 OHM,5%,0.2W	91637	CCF50-2-150R0J
A1R942	322-3235-00			RES,FXD:METAL FILM;2.74K OHM,1%,0.2W,TC=100	91637	CCF501G27400F
A1R943	313-1151-00	B010100	B010516	RES,FXD,FILM:150 OHM,5%,0.2W	91637	CCF50-2-150R0J
A1R943	313-1470-00	B010517		RES,FXD,FILM:47 OHM,5%,0.2W	91637	CCF50-2-47R00J
A1R944	322-3097-00			RES,FXD:METAL FILM;100 OHM,1%,0.2W,TC=100	91637	CCF501G100R0F
A1R945	322-3235-00			RES,FXD:METAL FILM;2.74K OHM,1%,0.2W,TC=100	91637	CCF501G27400F
A1R946	313-1221-00	B010100	B011085	RES,FXD,FILM:220 OHM,5%,0.2W	91637	CCF50-2-220R0J
A1R946	322-3193-00	B011086	B015823	RES,FXD:METAL FILM;1K OHM,1%,0.2W,TC=100	91637	CCF501G10000F
A1R946	313-1221-00	B015824		RES,FXD,FILM:220 OHM,5%,0.2W	91637	CCF50-2-220R0J
A1R947	322-3117-00	B010100	B050220	RES,FXD,FILM:162 OHM,1%,0.2W,TC=T0	91637	CCF501G162R0F
A1R947	321-0103-00	B050221		RES,FXD,FILM:115 OHM,1%,0.125W,TC=T0	91637	CMF55116G115R0F
A1R950	301-0470-00			RES,FXD,FILM:47 OHM,5%,0.5W	TK1727	SFR30 2322-182-
A1R951	308-0555-00			RES,FXD,WW:5 OHM,5%,3W	91637	CW2B-5R000J
A1R952	322-3085-00			RES,FXD:METAL FILM;75 OHM,1%,0.2W,TC=100	91637	CCF501G75R00F
A1R956	322-3239-00			RES,FXD,FILM:3.01K OHM,1%,0.2W,TC=T0	91637	CCF501G30100F
A1R957	321-0291-00			RES,FXD,FILM:10.5K OHM,1%,0.125W,TC=T0	91637	CMF55116G10501F
A1R972	313-1510-00			RES,FXD,FILM:51 OHM,5%,0.2W	91637	CCF501G51R00J
A1R973	313-1513-00			RES,FXD,CMPSN:51K OHM,5%,0.2W	91637	CCF50-2-51001J
A1R975	322-3097-00	B011086	B015823	RES,FXD:METAL FILM;100 OHM,1%,0.2W,TC=100	91637	CCF501G100R0F
A1R981	322-3097-00			RES,FXD:METAL FILM;100 OHM,1%,0.2W,TC=100	91637	CCF501G100R0F
A1R982	321-0103-00			RES,FXD,FILM:115 OHM,1%,0.125W,TC=T0	91637	CMF55116G115R0F
A1R985	322-3243-00			RES,FXD:METAL FILM;3.32K OHM,1%,0.2W,TC=100	91637	CCF50-1-G33200F
A1R986	322-3097-00			RES,FXD:METAL FILM;100 OHM,1%,0.2W,TC=100	91637	CCF501G100R0F
A1R995	313-1512-00			RES,FXD,FILM:5.1K OHM,5%,0.2W	91637	CCF50-2-51000J
A1S615	260-1421-00			SWITCH,PUSH:1 BTN,2 POLE,INSTRUMENT ID	71590	2KAA010000512
A1TP800	131-0608-00			TERMINAL,PIN:PRESSFIT/PCB,;MALE,STR	22526	48283-018
A1U100	153-2235-03			MICROCKT,LINEAR:MATCHED PAIR,LOW NOISE	80009	153223503

Component Number	Tektronix Part No.	Serial No. Effective	Dscont	Name & Description	Mfr. Code	Mfr. Part No.
A1U110	156-1245-00			IC,LINEAR:BIPOLAR,TRANSISTOR ARRAY;7,NPN	0CVK3	ULN2003A
A1U120	156-1245-00			IC,LINEAR:BIPOLAR,TRANSISTOR ARRAY;7,NPN	0CVK3	ULN2003A
A1U130	156-1245-00			IC,LINEAR:BIPOLAR,TRANSISTOR ARRAY;7,NPN	0CVK3	ULN2003A
A1U140	156-0651-00			IC,DIGITAL:LSTTL,SHIFT REGISTER;8-BIT SIPO	01295	SN74LS164N
A1U150	156-0651-00			IC,DIGITAL:LSTTL,SHIFT REGISTER;8-BIT SIPO	01295	SN74LS164N
A1U160	156-1200-01			IC,LINEAR:BIFET,OP-AMP	01295	TL074CN
A1U165	156-2854-00			IC,LINEAR:CMOS,OP-AMP;QUAD,HIGH BIAS	01295	TLC274CN
A1U170	156-0513-03			IC,MISC:CMOS,ANALOG MUX;8 CHANNEL	04713	MC14051BCP
A1U180	156-1191-01			IC,LINEAR:BIFET,OP-AMP;6MV VOS	01295	TL072ACP
A1U200	153-2235-03			MICROCKT,LINEAR:MATCHED PAIR,LOW NOISE	80009	153223503
A1U300	155-0238-00			MICROCKT,LINEAR:TRIGGER PREAMP	80009	155023800
A1U350	156-1191-01			IC,LINEAR:BIFET,OP-AMP;6MV VOS	01295	TL072ACP
A1U400	155-0236-00			MICROCKT,LINEAR:VERTICAL CHANNEL SWITCH	80009	155023600
A1U450	156-0158-07			IC,LINEAR:BIPOLAR,OP-AMP	01295	MC1458P
A1U475	156-0048-00			IC,LINEAR:BIPOLAR,TRANSISTOR ARRAY;(5),NPN	04713	MC3346P
A1U485	156-0048-00			IC,LINEAR:BIPOLAR,TRANSISTOR ARRAY;(5),NPN	04713	MC3346P
A1U500	155-0239-02			MICROCKT,LINEAR:TRIGGER	80009	155023902
A1U550	156-0048-00			IC,LINEAR:BIPOLAR,TRANSISTOR ARRAY;(5),NPN	04713	MC3346P
A1U600	155-0237-00			MICROCKT,LINEAR:VERTICAL OUTPUT	80009	155023700
A1U650	155-0244-01			MICROCKT,DGTL:SYSTEM LOGIC INTERFACE	31471	2321-001
A1U700	155-0240-00			MICROCKT,LINEAR:SWEEP	80009	155024000
A1U735	156-0048-00			IC,LINEAR:BIPOLAR,TRANSISTOR ARRAY;(5),NPN	04713	MC3346P
A1U800	155-0241-02			MICROCKT,DGTL:HORIZONTAL AMP SYS	80009	155024102
A1U850	156-0515-00			IC,MISC:CMOS,ANALOG MUX;TRIPLE SPDT	04713	MC14053BCP
A1U860	156-0515-00			IC,MISC:CMOS,ANALOG MUX;TRIPLE SPDT	04713	MC14053BCP
A1U900	155-0240-00			MICROCKT,LINEAR:SWEEP	80009	155024000
A1U910	156-1191-01			IC,LINEAR:BIFET,OP-AMP;6MV VOS	01295	TL072ACP
A1U950	155-0242-01			MICROCKT,LINEAR:Z AXIS AUTOFOCUS	80009	155024201
A1U975	160-5062-00	B010100	B011085	MICROCKT,DGTL:STTL,DECA 20 INP AND/OR PLD	80009	ORDER BY DESC
A1U975	160-5062-01	B011086	B015823	MICROCKT,DGTL:STTL,DECA 20 INP,PRGM	80009	ORDER BY DESC
A1U975	160-5062-00	B015824		MICROCKT,DGTL:STTL,DECA 20 INP AND/OR PLD	80009	ORDER BY DESC
A1U980	156-1611-01			IC,DIGITAL:FTTL,FLIP FLOP;DUAL D-TYPE	27014	74F74PC
A1U985	156-0341-00			IC,DIGITAL:TTL,DRIVER;DUAL 2-INPUT	01295	SN75453BP
A1VR112	152-0166-00			DIODE,ZENER:,;6.2V,5%,0.4W	04713	SZ11738RL
A1VR125	152-0166-00			DIODE,ZENER:,;6.2V,5%,0.4W	04713	SZ11738RL
A1VR152	152-0236-00			DIODE,ZENER:,;12.5V,4%,0.4W,NON STD VZ	14552	DZ920709B
A1VR225	152-0166-00			DIODE,ZENER:,;6.2V,5%,0.4W	04713	SZ11738RL
A1VR550	152-0195-00			DIODE,ZENER:,;5.1V,5%,0.4W	04713	SZ11755RL
A1W101	131-0566-00			BUS,CONDUCTOR:DUMMY RES,0.094 OD X 0.225L	24546	OMA0207
A1W103	131-0566-00			BUS,CONDUCTOR:DUMMY RES,0.094 OD X 0.225L	24546	OMA0207

Component Number	Tektronix Part No.	Serial No. Effective	Dscont	Name & Description	Mfr. Code	Mfr. Part No.
A1W104	131-0566-00			BUS,CONDUCTOR:DUMMY RES,0.094 OD X 0.225L	24546	OMA0207
A1W105	131-0566-00			BUS,CONDUCTOR:DUMMY RES,0.094 OD X 0.225L	24546	OMA0207
A1W106	195-6500-02			LEAD,ELECTRICAL:22 AWG,1.75 L,9-N	0J7N9	195-6500-02
A1W107	195-6500-02			LEAD,ELECTRICAL:22 AWG,1.75 L,9-N	0J7N9	195-6500-02
A1W108	195-6500-02			LEAD,ELECTRICAL:22 AWG,1.75 L,9-N	0J7N9	195-6500-02
A1W109	131-0566-00			BUS,CONDUCTOR:DUMMY RES,0.094 OD X 0.225L	24546	OMA0207
A1W120	131-0566-00			BUS,CONDUCTOR:DUMMY RES,0.094 OD X 0.225L	24546	OMA0207
A1W121	175-4594-01			CA ASSY,SP,ELEC:6,22 AWG,5.25 L	0J7N9	ORDER BY DESC
A1W122	175-4598-00			CA ASSY,SP,ELEC:8,26 AWG,7.0 L,RIBBON	TK0753	ORDER BY DESC
A1W141	174-0385-00			CA ASSY,SP,ELEC:5,22 AWG,2.6 L,9-N	0J7N9	ORDER BY DESC
A1W151	131-0566-00			BUS,CONDUCTOR:DUMMY RES,0.094 OD X 0.225L	24546	OMA0207
A1W160	131-0566-00			BUS,CONDUCTOR:DUMMY RES,0.094 OD X 0.225L	24546	OMA0207
A1W500	131-0566-00	B010100	B015823	BUS,CONDUCTOR:DUMMY RES,0.094 OD X 0.225L	24546	OMA0207
A1W610	131-0566-00			BUS,CONDUCTOR:DUMMY RES,0.094 OD X 0.225L	24546	OMA0207
A1W850	131-0566-00			BUS,CONDUCTOR:DUMMY RES,0.094 OD X 0.225L	24546	OMA0207
A1W918	195-3991-01			LEAD,ELECTRICAL:22 AWG,3.5 L,0-N	TK1352	ORDER BY DESC
A1W919	195-3991-01			LEAD,ELECTRICAL:22 AWG,3.5 L,0-N	TK1352	ORDER BY DESC
A1XU100	136-0763-00			SKT,PL-IN ELEK:26 LINE CONT IMPD HYBRID	00779	54977-1
A1XU119	136-0728-00			SOCKET,DIP:PCB,;FEMALE,STR,2 X 7,14 POS	09922	DILB14P-108
A1XU191	136-0263-07			SOCKET,CONTACT:PCB,;FEMALE,STR (QUANTITY OF 16)	22526	76215-002
A1XU200	136-0763-00			SKT,PL-IN ELEK:26 LINE CONT IMPD HYBRID	00779	54977-1
A1XU300	136-0764-00			SOCKET,HYBRID:PCB,;STR,48 POS,0.05 CTR	00779	54973-1
A1XU400	136-0763-00			SKT,PL-IN ELEK:26 LINE CONT IMPD HYBRID	00779	54977-1
A1XU500	136-0764-00			SOCKET,HYBRID:PCB,;STR,48 POS,0.05 CTR	00779	54973-1
A1XU600	136-0764-00			SOCKET,HYBRID:PCB,;STR,48 POS,0.05 CTR	00779	54973-1
A1XU650	136-0757-00			SOCKET,DIP:PCB,;FEMALE,STR,2 X 20,40 POS	09922	DILB40P-108
A1XU700	136-0764-00			SOCKET,HYBRID:PCB,;STR,48 POS,0.05 CTR	00779	54973-1
A1XU900	136-0764-00			SOCKET,HYBRID:PCB,;STR,48 POS,0.05 CTR	00779	54973-1
A1XU950	136-0764-00			SOCKET,HYBRID:PCB,;STR,48 POS,0.05 CTR	00779	54973-1

Component Number	Tektronix Part No.	Serial No. Effective	Dscont	Name & Description	Mfr. Code	Mfr. Part No.
A2	672-1037-12	B010100	B023343	CIRCUIT BD ASSY:LV PWR SPLY MODULE	80009	672103712
A2	672-1037-13	B023344	B051239	CIRCUIT BD ASSY:LV PWR SPLY MODULE	80009	672103713
A2	672-1037-15	B051240	B055955	CIRCUIT BD ASSY:LV PWR SPLY MODULE	80009	672103715
A2	672-1037-16	B055956		CIRCUIT BD ASSY:LV PWR SPLY MODULE	80009	672103716
A2E10	276-0525-00			CORE,EM:TOROID,FERRITE	12887	87-8673
A2F90	159-0021-00			FUSE,CARTRIDGE:3AG,2A,250V,FAST BLOW	71400	AGC-2
A2S90	260-1967-00			SWITCH,SLIDE:DPDT 5A/250V 10A/125V	7W718	4021.0512

Component Number	Tektronix Part No.	Serial No. Effective	Dscont	Name & Description	Mfr. Code	Mfr. Part No.
A2A1	--------			CIRCUIT BD ASSY:REGULATOR (AVAILABLE AT THE 672-1037-XX LEVEL ONLY)		
A2A1C1016	285-1222-00			CAP,FXD,PLASTIC:0.068UF,20%,250V	TK0515	PME 271 M 568
A2A1C1018	285-1222-00			CAP,FXD,PLASTIC:0.068UF,20%,250V	TK0515	PME 271 M 568
A2A1C1208	281-0775-01			CAP,FXD,CER DI:0.1UF,20%,50V	04222	SA105E104MAA
A2A1C1220	290-0939-00			CAP,FXD,ELCTLT:10UF,+100-10%,100V	1W344	LX100VB10RM10X2
A2A1C1222	281-0783-00	B010100	B050220	CAP,FXD,CER DI:0.1 UF 20%,100V	04222	SA301E104MAA
A2A1C1222	285-1356-00	B050221		CAP,FXD,PLASTIC:0.047UF,20%,250V	84411	X665 473M250
A2A1C1226	281-0791-00			CAP,FXD,CER DI:270PF,10%,100V	04222	SA102C271KAA
A2A1C1240	290-0939-00			CAP,FXD,ELCTLT:10UF,+100-10%,100V	1W344	LX100VB10RM10X2
A2A1C1245	281-0783-00	B010100	B050220	CAP,FXD,CER DI:0.1 UF 20%,100V	04222	SA301E104MAA
A2A1C1245	285-1356-00	B050221		CAP,FXD,PLASTIC:0.047UF,20%,250V	84411	X665 473M250
A2A1C1246	281-0791-00			CAP,FXD,CER DI:270PF,10%,100V	04222	SA102C271KAA
A2A1C1260	290-0942-00			CAP,FXD,ELCTLT:100UF,+100-10%,25V	0J9R5	CEUFM1E101
A2A1C1261	281-0773-00			CAP,FXD,CER DI:0.01UF,10%,100V	TK1743	CGB103KEX
A2A1C1270	281-0791-00			CAP,FXD,CER DI:270PF,10%,100V	04222	SA102C271KAA
A2A1C1272	281-0774-00			CAP,FXD,CER DI:0.022MFD,20%,100V	04222	SA101E223MAA
A2A1C1274	290-0778-00			CAP,FXD,ELCTLT:1UF,20%,50V	0J9R5	CEBPM1H010M(Q)
A2A1C1280	290-0942-00			CAP,FXD,ELCTLT:100UF,+100-10%,25V	0J9R5	CEUFM1E101
A2A1C1290	281-0775-01			CAP,FXD,CER DI:0.1UF,20%,50V	04222	SA105E104MAA
A2A1C1291	290-0778-00			CAP,FXD,ELCTLT:1UF,20%,50V	0J9R5	CEBPM1H010M(Q)
A2A1C1292	290-0778-01			CAP,FXD,ELCTLT:1UF,+20%,50V	55680	UVP1H010MAATD
A2A1C1300	290-0942-00			CAP,FXD,ELCTLT:100UF,+100-10%,25V	0J9R5	CEUFM1E101
A2A1C1330	290-0942-00			CAP,FXD,ELCTLT:100UF,+100-10%,25V	0J9R5	CEUFM1E101
A2A1C1331	281-0775-01			CAP,FXD,CER DI:0.1UF,20%,50V	04222	SA105E104MAA
A2A1C1350	290-0942-00			CAP,FXD,ELCTLT:100UF,+100-10%,25V	0J9R5	CEUFM1E101
A2A1C1357	281-0773-00			CAP,FXD,CER DI:0.01UF,10%,100V	TK1743	CGB103KEX
A2A1C1374	281-0791-00			CAP,FXD,CER DI:270PF,10%,100V	04222	SA102C271KAA
A2A1C1400	290-0943-02			CAP,FXD,ELCTLT:47UF,20%,25V	1W344	SME25VB47RM5X11
A2A1C1402	290-0943-02			CAP,FXD,ELCTLT:47UF,20%,25V	1W344	SME25VB47RM5X11
A2A1CR1011	152-0750-00			DIODE,RECT:,FAST RCVRY;BRIDGE,600V,3A	TK2319	RKBPC606
A2A1CR1220	152-0066-00			DIODE,RECT:,;400V,1A,IFSM = 30A	05828	GP10G-020
A2A1CR1221	152-0066-00			DIODE,RECT:,;400V,1A,IFSM = 30A	05828	GP10G-020
A2A1CR1241	152-0066-00			DIODE,RECT:,;400V,1A,IFSM = 30A	05828	GP10G-020
A2A1CR1242	152-0066-00			DIODE,RECT:,;400V,1A,IFSM = 30A	05828	GP10G-020
A2A1CR1243	152-0066-00			DIODE,RECT:,;400V,1A,IFSM = 30A	05828	GP10G-020
A2A1CR1244	152-0066-00			DIODE,RECT:,;400V,1A,IFSM = 30A	05828	GP10G-020
A2A1CR1260	152-0066-00			DIODE,RECT:,;400V,1A,IFSM = 30A	05828	GP10G-020
A2A1CR1261	152-0066-00			DIODE,RECT:,;400V,1A,IFSM = 30A	05828	GP10G-020
A2A1CR1262	152-0141-02			DIODE,SIG:,ULTRA FAST;40V,150MA,4NS,2PF	27014	FDH9427

Component Number	Tektronix Part No.	Serial No. Effective	Dscont	Name & Description	Mfr. Code	Mfr. Part No.
A2A1CR1263	152-0141-02			DIODE,SIG:,ULTRA FAST;40V,150MA,4NS,2PF	27014	FDH9427
A2A1CR1264	152-0141-02			DIODE,SIG:,ULTRA FAST;40V,150MA,4NS,2PF	27014	FDH9427
A2A1CR1281	152-0141-02			DIODE,SIG:,ULTRA FAST;40V,150MA,4NS,2PF	27014	FDH9427
A2A1CR1282	152-0141-02			DIODE,SIG:,ULTRA FAST;40V,150MA,4NS,2PF	27014	FDH9427
A2A1CR1283	152-0066-00			DIODE,RECT:,;400V,1A,IFSM = 30A	05828	GP10G-020
A2A1CR1290	152-0141-02			DIODE,SIG:,ULTRA FAST;40V,150MA,4NS,2PF	27014	FDH9427
A2A1CR1294	152-0141-02			DIODE,SIG:,ULTRA FAST;40V,150MA,4NS,2PF	27014	FDH9427
A2A1CR1295	152-0141-02			DIODE,SIG:,ULTRA FAST;40V,150MA,4NS,2PF	27014	FDH9427
A2A1CR1300	152-0141-02			DIODE,SIG:,ULTRA FAST;40V,150MA,4NS,2PF	27014	FDH9427
A2A1CR1301	152-0141-02			DIODE,SIG:,ULTRA FAST;40V,150MA,4NS,2PF	27014	FDH9427
A2A1CR1302	152-0141-02			DIODE,SIG:,ULTRA FAST;40V,150MA,4NS,2PF	27014	FDH9427
A2A1CR1303	152-0066-00			DIODE,RECT:,;400V,1A,IFSM = 30A	05828	GP10G-020
A2A1CR1330	152-0066-00			DIODE,RECT:,;400V,1A,IFSM = 30A	05828	GP10G-020
A2A1CR1331	152-0066-00			DIODE,RECT:,;400V,1A,IFSM = 30A	05828	GP10G-020
A2A1CR1332	152-0066-00			DIODE,RECT:,;400V,1A,IFSM = 30A	05828	GP10G-020
A2A1CR1334	152-0066-00			DIODE,RECT:,;400V,1A,IFSM = 30A	05828	GP10G-020
A2A1CR1351	152-0066-00			DIODE,RECT:,;400V,1A,IFSM = 30A	05828	GP10G-020
A2A1CR1376	152-0141-02			DIODE,SIG:,ULTRA FAST;40V,150MA,4NS,2PF	27014	FDH9427
A2A1E1001	119-0181-00			ARSR,ELEC SURGE:230,GAS FILLED,+/-15%	25088	B1-A230T
A2A1E1002	119-0181-00			ARSR,ELEC SURGE:230,GAS FILLED,+/-15%	25088	B1-A230T
A2A1F1330	159-0295-00			FUSE,CARTRIDGE:5 X 20MM,125V,1AMPGLASS	61857	TSC-1
A2A1J121	131-0608-00			TERMINAL,PIN:PRESSFIT/PCB,;MALE,STR (QUANTITY OF 6)	22526	48283-018
A2A1J122	131-0608-00			TERMINAL,PIN:PRESSFIT/PCB,;MALE,STR (QUANTITY OF 7)	22526	48283-018
A2A1J201	131-0608-00			TERMINAL,PIN:PRESSFIT/PCB,;MALE,STR (QUANTITY OF 4)	22526	48283-018
A2A1J202	131-0608-00			TERMINAL,PIN:PRESSFIT/PCB,;MALE,STR (QUANTITY OF 4)	22526	48283-018
A2A1J203	131-2925-00	B010100	B056316	CONN,BOX PWR:PCB,;FEMALE,RTANG,1 X 6	27264	10-10-1064
A2A1J204	131-1048-00			TERM,QIK DISC::PCB,;MALE,STR	00779	61134-1
A2A1J205	131-1048-00			TERM,QIK DISC::PCB,;MALE,STR	00779	61134-1
A2A1J206	131-1048-00			TERM,QIK DISC::PCB,;MALE,STR	00779	61134-1
A2A1J207	131-1048-00			TERM,QIK DISC::PCB,;MALE,STR	00779	61134-1
A2A1J208	131-0608-00			TERMINAL,PIN:PRESSFIT/PCB,;MALE,STR	22526	48283-018
A2A1L1011	108-0473-00			COIL,RF:FIXED,174UH	0JR03	ORDER BY DESC
A2A1L1012	108-0473-00			COIL,RF:FIXED,174UH	0JR03	ORDER BY DESC
A2A1L1402	108-0443-00			COIL,RF:FIXED,23.5UH	0JR03	108-0443-00
A2A1P208	131-3957-00			BUS,CONDUCTOR:SHUNT,1 X 2,0.1 CTR	22526	68786-202
A2A1Q1220	151-0497-00			TRANSISTOR,PWR:BIPOLAR,NPN;250V,1.0A,10MHZ	04713	TIP47
A2A1Q1221	151-0347-00			TRANSISTOR,SIG:BIPOLAR,NPN;160V,600MA	0JR04	2N5551
A2A1Q1222	151-0347-00			TRANSISTOR,SIG:BIPOLAR,NPN;160V,600MA	0JR04	2N5551

Component Number	Tektronix Part No.	Serial No. Effective	Dscont	Name & Description	Mfr. Code	Mfr. Part No.
A2A1Q1223	151-0347-02			TRANSISTOR,SIG:BIPOLAR,NPN;160V,600MA	04713	2N5551 RLRP
A2A1Q1240	151-0464-00			TRANSISTOR,PWR:BIPOLAR,NPN;100V,3.0A	04713	TIP31C
A2A1Q1241	151-0347-00			TRANSISTOR,SIG:BIPOLAR,NPN;160V,600MA	0JR04	2N5551
A2A1Q1243	151-0347-02			TRANSISTOR,SIG:BIPOLAR,NPN;160V,600MA	04713	2N5551 RLRP
A2A1Q1245	151-0347-00			TRANSISTOR,SIG:BIPOLAR,NPN;160V,600MA	0JR04	2N5551
A2A1Q1280	151-0476-00			TRANSISTOR,PWR:BIPOLAR,NPN;100V,3.0A	04713	TIP31C
A2A1Q1281	151-0347-02			TRANSISTOR,SIG:BIPOLAR,NPN;160V,600MA	04713	2N5551 RLRP
A2A1Q1290	151-1059-00			TRANSISTOR,SIG:JFET,N-CH;10V,30MA(MIN)	TK1864	SNJ132171
A2A1Q1300	151-0482-00			TRANSISTOR,PWR:BIPOLAR,PNP;100V,3.0A	04713	TIP32C
A2A1Q1301	151-0342-00			TRANSISTOR,SIG:BIPOLAR,PNP;60V,50MA,40MHZ	04713	MPS4249
A2A1Q1351	151-0429-00			TRANSISTOR,PWR:BIPOLAR,PNP;60V,4.0A,1.0MHZ	04713	MJE700
A2A1Q1354	151-0342-00			TRANSISTOR,SIG:BIPOLAR,PNP;60V,50MA,40MHZ	04713	MPS4249
A2A1Q1370	151-0341-00			TRANSISTOR,SIG:BIPOLAR,NPN;45V,50MA,40MHZ	04713	MPS6520
A2A1Q1376	151-0341-00			TRANSISTOR,SIG:BIPOLAR,NPN;45V,50MA,40MHZ	04713	MPS6520
A2A1R1010	301-0150-00			RES,FXD,FILM:15 OHM,5%,0.5W	19701	5053CX15R00J
A2A1R1011	315-0560-00			RES,FXD,FILM:56 OHM,5%,0.25W	TK1727	SFR25 2322-181
A2A1R1012	315-0560-00			RES,FXD,FILM:56 OHM,5%,0.25W	TK1727	SFR25 2322-181
A2A1R1013	315-0683-00			RES,FXD,FILM:68K OHM,5%,0.25W	TK1727	SFR25 2322-181
A2A1R1014	313-1363-00			RES,FXD,FILM:36K OHM,5%,0.2W	91637	CCF50-2-36001J
A2A1R1015	313-1363-00			RES,FXD,FILM:36K OHM,5%,0.2W	91637	CCF50-2-36001J
A2A1R1016	301-0680-00			RES,FXD,FILM:68 OHM,5%,0.5W	19701	5053CX68R00J
A2A1R1017	315-0474-00			RES,FXD,FILM:470K OHM,5%,0.25W	TK1727	SFR25 2322-181
A2A1R1018	301-0300-00			RES,FXD,FILM:30 OHM,5%,0.5W	19701	5053CX30R00J
A2A1R1019	301-0150-00			RES,FXD,FILM:15 OHM,5%,0.5W	19701	5053CX15R00J
A2A1R1204	313-1103-00			RES,FXD,FILM:10K OHM,5%,0.2W	91637	CCF50-2-10001J
A2A1R1208	313-1201-00			RES,FXD,FILM:200 OHM,5%,0.2W	91637	CCF50-2-200R0J
A2A1R1212	313-1393-00			RES,FXD,FILM:39K OHM,5%,0.2W	91637	CCF50-2-39001J
A2A1R1220	304-0822-00			RES,FXD,CMPSN:8.2K OHM,10%,1W	01121	GB8221
A2A1R1221	315-0100-02			RES,FXD,CMPSN:10 OHM,5%,0.25W	01121	CB1005
A2A1R1222	313-1102-00			RES,FXD,FILM:1K OHM,5%,0.2W	91637	CCF50-2-10000J
A2A1R1223	313-1823-00			RES,FXD,FILM:82K OHM,5%,0.2W	91637	CCF50-2-82001J
A2A1R1226	313-1472-00			RES,FXD,FILM:4.7K OHM,5%,0.2W	91637	CCF50-2-47000J
A2A1R1227	321-0634-00			RES,FXD,FILM:84.65K OHM,0.25%,0.125W,TC=T2	07716	CEA 84.65 K OHM
A2A1R1228	321-0293-03			RES,FXD,FILM:11.0K OHM,0.25%,0.125W,TC=T2	19701	5033RC11K00C
A2A1R1229	313-1683-00			RES,FXD,FILM:68K OHM,5%,0.2W	91637	CCF50-2-6800IJ
A2A1R1240	303-0202-00			RES,FXD,CMPSN:2K OHM,5%,1W	91637	CMF65-42 2 K
A2A1R1241	307-0105-00			RES,FXD,CMPSN:3.9 OHM,5%,0.25W	01121	CB 39G5
A2A1R1242	313-1152-00			RES,FXD,FILM:1.5K OHM,5%,0.2W	91637	CCF50-2-15000J
A2A1R1243	313-1393-00			RES,FXD,FILM:39K OHM,5%,0.2W	91637	CCF50-2-39001J
A2A1R1244	313-1104-00			RES,FXD,FILM:100K OHM,5%,0.2W	91637	CCF50-2-10002J

Component Number	Tektronix Part No.	Serial No. Effective	Dscont	Name & Description	Mfr. Code	Mfr. Part No.
A2A1R1246	313-1472-00			RES,FXD,FILM:4.7K OHM,5%,0.2W	91637	CCF50-2-47000J
A2A1R1247	321-0368-00			RES,FXD,FILM:66.5K OHM,1%,0.125W,TC=T0	91637	CMF55116G66501F
A2A1R1248	321-0319-00			RES,FXD,FILM:20.5K OHM,1%,0.125W,TC=T0	91637	CMF55116G20501F
A2A1R1249	313-1473-00			RES,FXD,FILM:47K OHM,5%,0.2W	91637	CCF50-2-47001J
A2A1R1261	321-0289-00			RES,FXD,FILM:10.0K OHM,1%,0.125W,TC=T0	91637	CMF55116G10001F
A2A1R1262	321-0318-00			RES,FXD,FILM:20.0K OHM,1%,0.125W,TC=T0	91637	CMF55116G20001F
A2A1R1264	313-1473-00			RES,FXD,FILM:47K OHM,5%,0.2W	91637	CCF50-2-47001J
A2A1R1270	313-1432-00			RES,FXD,FILM:4.3K OHM,5%,0.2W	91637	CCF50-2-43000J
A2A1R1273	313-1473-00			RES,FXD,FILM:47K OHM,5%,0.2W	91637	CCF50-2-47001J
A2A1R1274	313-1683-00			RES,FXD,FILM:68K OHM,5%,0.2W	91637	CCF50-2-68001J
A2A1R1280	303-0470-00			RES,FXD,CMPSN:47 OHM,5%,1W	91637	CMF65-42 47 OHM
A2A1R1281	308-0839-00			RES,FXD:0.1 OHM,5%,1.0W	75042	SP-20-R1000J
A2A1R1282	313-1102-00			RES,FXD,FILM:1K OHM,5%,0.2W	91637	CCF50-2-10000J
A2A1R1283	313-1103-00			RES,FXD,FILM:10K OHM,5%,0.2W	91637	CCF50-2-10001J
A2A1R1284	321-0318-00			RES,FXD,FILM:20.0K OHM,1%,0.125W,TC=T0	91637	CMF55116G20001F
A2A1R1285	321-0318-00			RES,FXD,FILM:20.0K OHM,1%,0.125W,TC=T0	91637	CMF55116G20001F
A2A1R1286	313-1243-00			RES,FXD,FILM:24K OHM,5%,0.2W	91637	R20J24K
A2A1R1287	313-1472-00			RES,FXD,FILM:4.7K OHM,5%,0.2W	91637	CCF50-2-47000J
A2A1R1291	321-0334-00			RES,FXD,FILM:29.4K OHM,1%,0.125W,TC=T0	91637	CMF55116G29401F
A2A1R1292	311-2258-00			RES,VAR,TRMR:CERMET;1K OHM,20%,0.5W	TK2073	GF06V2 102 M L2
A2A1R1293	321-0639-00			RES,FXD,FILM:9.6K OHM,1%,0.125W,TC=T0	91637	CMF55116G96000F
A2A1R1294	313-1103-00			RES,FXD,FILM:10K OHM,5%,0.2W	91637	CCF50-2-10001J
A2A1R1295	313-1103-00			RES,FXD,FILM:10K OHM,5%,0.2W	91637	CCF50-2-10001J
A2A1R1296	313-1103-00			RES,FXD,FILM:10K OHM,5%,0.2W	91637	CCF50-2-10001J
A2A1R1297	322-3289-00			RES,FXD:METAL FILM;10K OHM,1%,0.2W,TC=100	91637	CCF50G10001F
A2A1R1298	322-3275-00			RES,FXD,FILM:7.15K OHM,1%,0.2W,TC=T0	91637	CCF501G71500F
A2A1R1299	313-1224-00			RES,FXD,FILM:220K,5%,0.2W	91637	CCF50-2-22002J
A2A1R1300	303-0470-00			RES,FXD,CMPSN:47 OHM,5%,1W	91637	CMF65-42 47 OHM
A2A1R1301	308-0839-00			RES,FXD:0.1 OHM,5%,1.0W	75042	SP-20-R1000J
A2A1R1302	313-1102-00			RES,FXD,FILM:1K OHM,5%,0.2W	91637	CCF50-2-10000J
A2A1R1304	313-1243-00			RES,FXD,FILM:24K OHM,5%,0.2W	91637	R20J24K
A2A1R1305	321-0289-06			RES,FXD,FILM:10.0K OHM,0.25%,0.125W,TC=T9	19701	5033RE10K00C
A2A1R1306	321-0318-03			RES,FXD,FILM:20.0K OHM,0.125%,0.125W,TC=T2	19701	5033RC20K00C
A2A1R1307	313-1472-00			RES,FXD,FILM:4.7K OHM,5%,0.2W	91637	CCF50-2-47000J
A2A1R1309	313-1222-00			RES,FXD,FILM:2.2K OHM,5%,0.2W	91637	CCF50-2-22000J
A2A1R1331	321-0685-00			RES,FXD,FILM:30K OHM,0.5%,0.125W,TC=T2	19701	5033RC30K00D
A2A1R1332	321-0318-03			RES,FXD,FILM:20.0K OHM,0.125%,0.125W,TC=T2	19701	5033RC20K00C
A2A1R1333	313-1751-00			RES,FXD,FILM:750 OHM,5%,0.2W	91637	CCF50-2-750R0J
A2A1R1334	313-1103-00			RES,FXD,FILM:10K OHM,5%,0.2W	91637	CCF50-2-10001J
A2A1R1351	313-1202-00			RES,FXD,FILM:2K OHM,5%,0.2W	91637	CCF50-2-20000J

Component Number	Tektronix Part No.	Serial No. Effective	Dscont	Name & Description	Mfr. Code	Mfr. Part No.
A2A1R1352	301-0150-00			RES,FXD,FILM:15 OHM,5%,0.5W	19701	5053CX15R00J
A2A1R1353	301-0150-00			RES,FXD,FILM:15 OHM,5%,0.5W	19701	5053CX15R00J
A2A1R1354	313-1222-00			RES,FXD,FILM:2.2K OHM,5%,0.2W	91637	CCF50-2-22000J
A2A1R1355	313-1682-00			RES,FXD,FILM:6.8K OHM,5%,0.2W	91637	CCF50-2-68000J
A2A1R1356	313-1512-00			RES,FXD,FILM:5.1K OHM,5%,0.2W	91637	CCF50-2-51000J
A2A1R1357	321-0318-03			RES,FXD,FILM:20.0K OHM,0.125%,0.125W,TC=T2	19701	5033RC20K00C
A2A1R1358	321-0689-00			RES,FXD,FILM:24.9K OHM,0.5%,0.125W,TC=T0	19701	5033RD24K90D
A2A1R1359	313-1682-00			RES,FXD,FILM:6.8K OHM,5%,0.2W	91637	CCF50-2-68000J
A2A1R1370	321-0363-00			RES,FXD,FILM:59.0K OHM,1%,0.125W,TC=T0	91637	CMF55116G59001F
A2A1R1372	321-0299-00			RES,FXD,FILM:12.7K OHM,1%,0.125W,TC=T0	91637	CMF55116G12701F
A2A1R1374	313-1103-00			RES,FXD,FILM:10K OHM,5%,0.2W	91637	CCF50-2-10001J
A2A1R1376	321-0318-03			RES,FXD,FILM:20.0K OHM,0.125%,0.125W,TC=T2	19701	5033RC20K00C
A2A1R1378	313-1202-00			RES,FXD,FILM:2K OHM,5%,0.2W	91637	CCF50-2-20000J
A2A1R1400	315-0101-03	B010100	B051239	RES,FXD,CMPSN:100 OHM,5%,0.25W	01121	CB1015
A2A1R1400	315-0560-00	B051240		RES,FXD,FILM:56 OHM,5%,0.25W	TK1727	SFR25 2322-181
A2A1R1402	315-0101-03			RES,FXD,CMPSN:100 OHM,5%,0.25W	01121	CB1015
A2A1RT1010	307-0350-00			RES,THERMAL:7.5 OHM,10%,3.9%/DEG C	15454	75DJ7R5K-RO-220
A2A1RT1016	307-0746-00			RES,THERMAL:5 OHM,10%,7A/DEG	15454	SG200-S
A2A1S350	260-1849-00			SWITCH,PUSH:DPDT,4A,250VA	31918	51809
A2A1T1229	120-1401-00			XFMR,TRIGGER:LINE,1:1 TURNS RATI	54937	DMI 500-2044
A2A1U1260	156-1161-00			IC,LINEAR:BIPOLAR,VOLTAGE REGULATOR	04713	LM317T
A2A1U1270	156-0495-00			IC,LINEAR:BIPOLAR,OP-AMP;QUAD,SINGLE SPLY	01295	LM324N
A2A1U1281	156-0158-07			IC,LINEAR:BIPOLAR,OP-AMP	01295	MC1458P
A2A1U1290	156-1173-00			IC,LINEAR:BIPOLAR,VOLTAGE REFERENCE	04713	MC1403U
A2A1U1300	156-0495-00			IC,LINEAR:BIPOLAR,OP-AMP;QUAD,SINGLE SPLY	01295	LM324N
A2A1U1330	156-0872-00			IC,LINEAR:BIPOLAR,VOLTAGE REGULATOR	04713	MC7912CT
A2A1U1371	156-0495-00			IC,LINEAR:BIPOLAR,OP-AMP;QUAD,SINGLE SPLY	01295	LM324N
A2A1VR1293	152-0055-00			DIODE,ZENER:,;11V,5%,0.4W	04713	SZG35009K1 1N96
A2A1W251	175-4585-00			CA ASSY,SP,ELEC:20,28 AWG,13.0 L	53387	ORDER BY DESC

Component Number	Tektronix Part No.	Serial No. Effective	Dscont	Name & Description	Mfr. Code	Mfr. Part No.
A3	--------			CIRCUIT BD ASSY:INVERTER (AVAILABLE AT THE 672-1037-XX LEVEL ONLY)		
A3C1020	285-1192-00			CAP,FXD,PPR DI:0.0022 UF,20%,250VAC,	TK0515	PME271Y422
A3C1021	290-0971-00			CAP,FXD,ELCTLT:290UF +50-10%,200V	24165	39DX1314
A3C1022	290-0971-00			CAP,FXD,ELCTLT:290UF +50-10%,200V	24165	39DX1314
A3C1023	281-0773-00			CAP,FXD,CER DI:0.01UF,10%,100V	TK1743	CGB103KEX
A3C1025	290-0942-00			CAP,FXD,ELCTLT:100UF,+100-10%,25V	0J9R5	CEUFM1E101
A3C1029	281-0850-00			CAP,FXD,CER DI:820PF,5%,50VDC	TK1743	CGC821JDN
A3C1032	281-0812-00			CAP,FXD,CER DI:1000PF,10%,100V	04222	SA101C102KAA
A3C1033	281-0772-00			CAP,FXD,CER DI:4700PF,10%,100V	04222	SA101C472KAA
A3C1034	290-0524-00			CAP,FXD,ELCTLT:4.7UF,20%,10V	D5243	ETP-1B 4.7UF 10
A3C1035	281-0772-00			CAP,FXD,CER DI:4700PF,10%,100V	04222	SA101C472KAA
A3C1040	281-0773-00			CAP,FXD,CER DI:0.01UF,10%,100V	TK1743	CGB103KEX
A3C1042	281-0773-00			CAP,FXD,CER DI:0.01UF,10%,100V	TK1743	CGB103KEX
A3C1048	281-0826-00			CAP,FXD,CER DI:2200PF,10%,100V	TK1743	CGB222KEX
A3C1050	285-1254-00			CAP,FXD,PLASTIC:0.22UF,10%,400WVDC	84411	TEK-257-22494
A3C1051	285-1192-00			CAP,FXD,PPR DI:0.0022 UF,20%,250VAC	TK0515	PME271Y422
A3C1052	285-1196-00			CAP,FXD,PPR DI:0.01UF,20%,250V	TK0515	PME 289 MB 5100
A3C1062	281-0850-00			CAP,FXD,CER DI:820PF,5%,50VDC	TK1743	CGC821JDN
A3C1065	285-1190-00			CAP,FXD,MTLZD:0.056 UF,5%,250 V	05292	PMT3R ADVISE
A3C1066	290-0782-01			CAP,FXD,ELCTLT:4.7UF,20%,35VDC	55680	UVX1V4R7MAA1TD
A3C1067	281-0850-00			CAP,FXD,CER DI:820PF,5%,50VDC	TK1743	CGC821JDN
A3C1071	281-0772-00			CAP,FXD,CER DI:4700PF,10%,100V	04222	SA101C472KAA
A3C1072	290-0806-00			CAP,FXD,ELCTLT:3.3UF,+75-10%,350VDC	0J9R5	CE04W2V3R3B
A3C1075	281-0775-01			CAP,FXD,CER DI:0.1UF,20%,50V	04222	SA105E104MAA
A3C1101	290-0942-00			CAP,FXD,ELCTLT:100UF,+100-10%,25V	0J9R5	CEUFM1E101
A3C1102	290-0942-00			CAP,FXD,ELCTLT:100UF,+100-10%,25V	0J9R5	CEUFM1E101
A3C1110	290-0800-00			CAP,FXD,ELCTLT:250UF,+100-10%,20V	1W344	RXC25B251W12X24
A3C1111	290-0800-00			CAP,FXD,ELCTLT:250UF,+100-10%,20V	1W344	RXC25B251W12X24
A3C1112	290-0782-01			CAP,FXD,ELCTLT:4.7UF,20%,35VDC	55680	UVX1V4R7MAA1TD
A3C1113	290-0798-00			CAP,FXD,ELCTLT:180UF,+100-10%,40V	24165	672D187H040DM5C
A3C1114	290-0800-00			CAP,FXD,ELCTLT:250UF,+100-10%,20V	1W344	RXC25B251W12X24
A3C1115	290-0800-00			CAP,FXD,ELCTLT:250UF,+100-10%,20V	1W344	RXC25B251W12X24
A3C1116	290-0798-00			CAP,FXD,ELCTLT:180UF,+100-10%,40V	24165	672D187H040DM5C
A3C1120	290-0939-00			CAP,FXD,ELCTLT:10UF,+100-10%,100V	1W344	LX100VB10RM10X2
A3C1130	290-0939-00			CAP,FXD,ELCTLT:10UF,+100-10%,100V	1W344	LX100VB10RM10X2
A3C1132	290-0880-00			CAP,FXD,ALUM:10UF,+50-20%,160V	0J9R5	CEUSM2C100-Q
A3CR1022	152-0333-00			SEMICOND DVC,DI:SW,SI,55V,200MA,DO-35	27014	FDH-6012
A3CR1023	152-0141-02			DIODE,SIG:,ULTRA FAST;40V,150MA,4NS,2PF	27014	FDH9427
A3CR1028	152-0141-02			DIODE,SIG:,ULTRA FAST;40V,150MA,4NS,2PF	27014	FDH9427

Component Number	Tektronix Part No.	Serial No. Effective	Dscont	Name & Description	Mfr. Code	Mfr. Part No.
A3CR1030	152-0141-02			DIODE,SIG:,ULTRA FAST;40V,150MA,4NS,2PF	27014	FDH9427
A3CR1034	152-0141-02			DIODE,SIG:,ULTRA FAST;40V,150MA,4NS,2PF	27014	FDH9427
A3CR1035	152-0141-02			DIODE,SIG:,ULTRA FAST;40V,150MA,4NS,2PF	27014	FDH9427
A3CR1040	152-0075-00			SEMICOND DVC,DI:SW,GE,22V,80MW,DO-7	66891	G866
A3CR1050	152-1165-00			DIODE,RECT:,ULTRA FAST;600V,4A,50NS	04713	MUR460RL
A3CR1060	152-0040-00			DIODE,RECT:,;600V,1A,50A IFSM	14936	GP15J-069
A3CR1062	152-0333-00			SEMICOND DVC,DI:SW,SI,55V,200MA,DO-35	27014	FDH-6012
A3CR1063	152-0333-00			SEMICOND DVC,DI:SW,SI,55V,200MA,DO-35	27014	FDH-6012
A3CR1064	152-0333-00			SEMICOND DVC,DI:SW,SI,55V,200MA,DO-35	27014	FDH-6012
A3CR1065	152-0333-00			SEMICOND DVC,DI:SW,SI,55V,200MA,DO-35	27014	FDH-6012
A3CR1070	152-0040-00			DIODE,RECT:,;600V,1A,50A IFSM	14936	GP15J-069
A3CR1072	152-0066-00			DIODE,RECT:,;400V,1A,IFSM = 30A	05828	GP10G-020
A3CR1101	152-0400-00	B010100	B055955	DIODE,RECT:,FAST RCVRY;400V,1A,200NS	14552	MB2501
A3CR1101	152-0601-01	B055956		SEMICOND DVC,DI:RECTIFIER,SI,150V,1A	04713	MUR115RL
A3CR1102	152-0400-00	B010100	B055955	DIODE,RECT:,FAST RCVRY;400V,1A,200NS	14552	MB2501
A3CR1102	152-0601-01	B055956		SEMICOND DVC,DI:RECTIFIER,SI,150V,1A	04713	MUR115RL
A3CR1103	152-0400-00	B010100	B055955	DIODE,RECT:,FAST RCVRY;400V,1A,200NS	14552	MB2501
A3CR1103	152-0601-01	B055956		SEMICOND DVC,DI:RECTIFIER,SI,150V,1A	04713	MUR115RL
A3CR1104	152-0400-00	B010100	B055955	DIODE,RECT:,FAST RCVRY;400V,1A,200NS	14552	MB2501
A3CR1104	152-0601-01	B055956		SEMICOND DVC,DI:RECTIFIER,SI,150V,1A	04713	MUR115RL
A3CR1105	152-0400-00	B010100	B055955	DIODE,RECT:,FAST RCVRY;400V,1A,200NS	14552	MB2501
A3CR1105	152-0601-01	B055956		SEMICOND DVC,DI:RECTIFIER,SI,150V,1A	04713	MUR115RL
A3CR1106	152-0400-00	B010100	B055955	DIODE,RECT:,FAST RCVRY;400V,1A,200NS	14552	MB2501
A3CR1106	152-0601-01	B055956		SEMICOND DVC,DI:RECTIFIER,SI,150V,1A	04713	MUR115RL
A3CR1110	152-0794-00			SEMICOND DVC,DI:RECT,SI,10A,30V,TO-220	81483	95-4269 (12CTQ0
A3CR1113	152-0946-00			SEMICOND DVC,DI:RECT,SI,40V,3.0A	04713	1N5822
A3CR1114	152-0946-00			SEMICOND DVC,DI:RECT,SI,40V,3.0A	04713	1N5822
A3CR1115	152-0946-00			SEMICOND DVC,DI:RECT,SI,40V,3.0A	04713	1N5822
A3CR1116	152-0946-00			SEMICOND DVC,DI:RECT,SI,40V,3.0A	04713	1N5822
A3CR1121	152-0400-00	B010100	B055955	DIODE,RECT:,FAST RCVRY;400V,1A,200NS	14552	MB2501
A3CR1121	152-0601-01	B055956		SEMICOND DVC,DI:RECTIFIER,SI,150V,1A	04713	MUR115RL
A3CR1122	152-0400-00	B010100	B055955	DIODE,RECT:,FAST RCVRY;400V,1A,200NS	14552	MB2501
A3CR1122	152-0601-01	B055956		SEMICOND DVC,DI:RECTIFIER,SI,150V,1A	04713	MUR115RL
A3CR1123	152-0400-00	B010100	B055955	DIODE,RECT:,FAST RCVRY;400V,1A,200NS	14552	MB2501
A3CR1123	152-0601-01	B055956		SEMICOND DVC,DI:RECTIFIER,SI,150V,1A	04713	MUR115RL
A3CR1124	152-0400-00	B010100	B055955	DIODE,RECT:,FAST RCVRY;400V,1A,200NS	14552	MB2501
A3CR1124	152-0601-01	B055956		SEMICOND DVC,DI:RECTIFIER,SI,150V,1A	04713	MUR115RL
A3CR1131	152-0400-00	B010100	B055955	DIODE,RECT:,FAST RCVRY;400V,1A,200NS	14552	MB2501
A3CR1131	152-0601-01	B055956		SEMICOND DVC,DI:RECTIFIER,SI,150V,1A	04713	MUR115RL
A3CR1132	152-0400-00	B010100	B055955	DIODE,RECT:,FAST RCVRY;400V,1A,200NS	14552	MB2501

Component Number	Tektronix Part No.	Serial No. Effective	Dscont	Name & Description	Mfr. Code	Mfr. Part No.
A3CR1132	152-0601-01	B055956		SEMICOND DVC,DI:RECTIFIER,SI,150V,1A	04713	MUR115RL
A3F1101	159-0255-00			FUSE,CARTRIDGE:FAST BLOW,4A,125V	61857	EQ4A
A3F1102	159-0059-00			FUSE,WIRE LEAD:5A,125V	61857	SPI-5A
A3J301	131-0608-00			TERMINAL,PIN:PRESSFIT/PCB,;MALE,STR (QUANTITY OF 3)	22526	48283-018
A3J302	131-0608-00			TERMINAL,PIN:PRESSFIT/PCB,;MALE,STR (QUANTITY OF 3)	22526	48283-018
A3J303	131-2926-00			CONN,BOX PWR:PCB,;FEMALE,RTANG,1 X 2	27264	10-10-1024
A3L1110	108-0554-00			COIL,RF:FIXED,5UH,+/-20%	0JR03	108-0554-00
A3L1113	108-1144-00			COIL,RF:FIXED,27 UH,20%	0JR03	ORDER BY DESC
A3L1114	108-1144-00			COIL,RF:FIXED,27 UH,20%	0JR03	ORDER BY DESC
A3L1115	108-1144-00			COIL,RF:FIXED,27 UH,20%	0JR03	ORDER BY DESC
A3L1116	108-1144-00			COIL,RF:FIXED,27 UH,20%	0JR03	ORDER BY DESC
A3LR1060	108-0329-00			COIL,RF:FIXED,2.4UH	0JR03	108-0329-00
A3Q1021	151-0301-00			TRANSISTOR,SIG:BIPOLAR,PNP;60V,600MA	04713	2N2907A
A3Q1022	151-0192-00			TRANSISTOR,SIG:BIPOLAR,NPN;25V,100MA	04713	SPS8801
A3Q1029	151-0254-00			TRANSISTOR,SIG:BIPOLAR,NPN;30V,500MA	0JR04	MPS-A14
A3Q1030	151-0301-00			TRANSISTOR,SIG:BIPOLAR,PNP;60V,600MA	04713	2N2907A
A3Q1040	151-0302-00			TRANSISTOR,SIG:BIPOLAR,NPN;40V,800MA	04713	2N2222A
A3Q1050	151-1152-00			TRANSISTOR,PWR:MOS,N-CH;500V,2.5A,3.0 OHM	04713	MTP3N50E
A3Q1060	151-1152-00			TRANSISTOR,PWR:MOS,N-CH;500V,2.5A,3.0 OHM	04713	MTP3N50E
A3Q1062	151-0302-00			TRANSISTOR,SIG:BIPOLAR,NPN;40V,800MA	04713	2N2222A
A3Q1070	151-1152-00			TRANSISTOR,PWR:MOS,N-CH;500V,2.5A,3.0 OHM	04713	MTP3N50E
A3Q1110	151-0188-00			TRANSISTOR,SIG:BIPOLAR,PNP;40V,200MA	04713	2N3906
A3R1018	313-1394-00			RES,FXD,FILM:390K,5%,0.2W	91637	CCF50-2-39002J
A3R1019	313-1394-00			RES,FXD,FILM:390K,5%,0.2W	91637	CCF50-2-39002J
A3R1020	301-0274-00			RES,FXD,FILM:270K OHM,5%,0.5W	19701	5053CX270K0J
A3R1022	313-1104-00			RES,FXD,FILM:100K OHM,5%,0.2W	91637	CCF50-2-10002J
A3R1023	313-1122-00			RES,FXD,FILM:1.2K OHM,5%,0.2W	91637	CCF50-2-12000J
A3R1024	313-1473-00			RES,FXD,FILM:47K OHM,5%,0.2W	91637	CCF50-2-47001J
A3R1025	313-1302-00			RES,FXD,FILM:3K OHM,5%,0.2W	91637	CCF50-2-30000J
A3R1027	321-0431-00			RES,FXD,FILM:301K OHM,1%,0.125W,TC=T0	91637	CMF55116G30102F
A3R1028	321-0481-04			RES,FXD,FILM:1M OHM,0.1%,0.125W,TC=T2	19701	5033RC1M000B
A3R1029	313-1152-00			RES,FXD,FILM:1.5K OHM,5%,0.2W	91637	CCF50-2-15000J
A3R1030	313-1102-00			RES,FXD,FILM:1K OHM,5%,0.2W	91637	CCF50-2-10000J
A3R1031	313-1334-00			RES,FXD,FILM:330K OHM,5%,0.2W	91637	CCF502-33002J
A3R1032	321-0335-00			RES,FXD,FILM:30.1K OHM,1%,0.125W,TC=T0	91637	CMF55116G30101F
A3R1033	313-1104-00			RES,FXD,FILM:100K OHM,5%,0.2W	91637	CCF50-2-10002J
A3R1034	313-1102-00			RES,FXD,FILM:1K OHM,5%,0.2W	91637	CCF50-2-10000J
A3R1035	313-1103-00			RES,FXD,FILM:10K OHM,5%,0.2W	91637	CCF50-2-10001J
A3R1036	313-1103-00			RES,FXD,FILM:10K OHM,5%,0.2W	91637	CCF50-2-10001J

Component Number	Tektronix Part No.	Serial No. Effective	Dscont	Name & Description	Mfr. Code	Mfr. Part No.
A3R1037	313-1272-00			RES,FXD,FILM:2.7K OHM,5%,0.2W	91637	CCF50-2-27000J
A3R1040	313-1103-00			RES,FXD,FILM:10K OHM,5%,0.2W	91637	CCF50-2-10001J
A3R1041	313-1471-00			RES,FXD,FILM:470 OHM,5%,0.2W	91637	CCF50-2-470R0J
A3R1042	313-1102-00			RES,FXD,FILM:1K OHM,5%,0.2W	91637	CCF50-2-10000J
A3R1044	321-0334-00			RES,FXD,FILM:29.4K OHM,1%,0.125W,TC=T0	91637	CMF55116G29401F
A3R1045	321-0289-00			RES,FXD,FILM:10.0K OHM,1%,0.125W,TC=T0	91637	CMF55116G10001F
A3R1046	321-0422-00			RES,FXD,FILM:243K OHM,1%,0.125W,TC=T0	91637	CMF55116G24302F
A3R1050	308-0843-00			RES,FXD:WIREWOUND;0.2 OHM,5%,1W	91637	CW-1-R20JT
A3R1052	313-1470-00			RES,FXD,FILM:47 OHM,5%,0.2W	91637	CCF50-2-47R00J
A3R1060	313-1470-00			RES,FXD,FILM:47 OHM,5%,0.2W	91637	CCF50-2-47R00J
A3R1061	313-1202-00			RES,FXD,FILM:2K OHM,5%,0.2W	91637	CCF50-2-20000J
A3R1062	313-1682-00			RES,FXD,FILM:6.8K OHM,5%,0.2W	91637	CCF50-2-68000J
A3R1063	313-1202-00			RES,FXD,FILM:2K OHM,5%,0.2W	91637	CCF50-2-20000J
A3R1064	313-1202-00			RES,FXD,FILM:2K OHM,5%,0.2W	91637	CCF50-2-20000J
A3R1065	315-0154-00			RES,FXD,FILM:150K OHM,5%,0.25W	TK1727	SFR25 2322-181
A3R1066	313-1202-00			RES,FXD,FILM:2K OHM,5%,0.2W	91637	CCF50-2-20000J
A3R1067	313-1682-00			RES,FXD,FILM:6.8K OHM,5%,0.2W	91637	CCF50-2-68000J
A3R1068	313-1202-00			RES,FXD,FILM:2K OHM,5%,0.2W	91637	CCF50-2-20000J
A3R1069	303-0363-00			RES,FXD,CMPSN:36K OHM,5%,1W	91637	CMF65-42 36K 5
A3R1070	313-1470-00			RES,FXD,FILM:47 OHM,5%,0.2W	91637	CCF50-2-47R00J
A3R1071	315-0431-00			RES,FXD,FILM:430 OHM,5%,0.25W	TK1727	SFR25 2322-181
A3R1072	321-0318-03			RES,FXD,FILM:20.0K OHM,0.125%,0.125W,TC=T2	19701	5033RC20K00C
A3R1075	313-1472-00			RES,FXD,FILM:4.7K OHM,5%,0.2W	91637	CCF50-2-47000J
A3R1110	321-0219-00			RES,FXD,FILM:1.87K OHM,1%,0.125W,TC=T0	91637	CMF55116G18700F
A3R1111	315-0510-00			RES,FXD,FILM:51 OHM,5%,0.25W	TK1727	SFR25 2322-181
A3R1112	321-0271-00			RES,FXD,FILM:6.49K OHM,1%,0.125W,TC=T0	91637	CMF55116G64900F
A3R1113	321-0271-00			RES,FXD,FILM:6.49K OHM,1%,0.125W,TC=T0	91637	CMF55116G64900F
A3R1114	321-0297-00			RES,FXD,FILM:12.1K OHM,1%,0.125W,TC=T0	91637	CMF55116G12101F
A3R1115	301-0301-00			RES,FXD,FILM:300 OHM,5%,0.5W	TK1727	SFR30 2322-182-
A3R1129	313-1474-00			RES,FXD,FILM:470K OHM,5%,0.2W	91637	R20J470K
A3R1130	313-1273-00			RES,FXD,FILM:27K OHM,5%,0.2W	91637	CCF50-2-27001J
A3RT1110	307-0124-00			RES,THERMAL:5K OHM,10%,NTC	91637	C132
A3S1020	260-0907-01			SWITCH,THRMSTC:NC,OPEN 97.8,CL 75.6,10A	TK2292	430-1537
A3T1020	120-1244-00			TRANSFORMER,RF:COMMON MODE	20462	4096
A3T1060	120-1437-00			XFMR,PWR,STPDN:	02113	C1310
A3U1029	156-0885-05			CPLR,OPTOELECTR:LED,5KV,ISOLATION	0JR04	TLP631 TEK-L
A3U1030	156-1627-00			IC,LINEAR:BIPOLAR,SW-REGULATOR CONT	01295	TL594CN
A3U1040	156-0885-05			CPLR,OPTOELECTR:LED,5KV,ISOLATION	0JR04	TLP631 TEK-L
A3U1062	156-0411-02			IC,LINEAR:BIPOLAR,COMPARATOR	04713	LM339N
A3U1064	156-0366-00			IC,DIGITAL:CMOS,FLIP FLOP;DUAL D-TYPE	04713	MC14013BCP

Component Number	Tektronix Part No.	Serial No. Effective	Dscont	Name & Description	Mfr. Code	Mfr. Part No.
A3U1066	156-0328-00			IC,DIGITAL:MOS,DRIVER;DUAL CLOCK DRIVER	27014	DS0026C (N OR J
A3U1110	156-1161-00			IC,LINEAR:BIPOLAR,VOLTAGE REGULATOR	04713	LM317T
A3VR1020	152-0166-00			DIODE,ZENER:,;6.2V,5%,0.4W	04713	SZ11738RL
A3VR1062	152-0168-00			DIODE,ZENER:,;12V,5%,0.4W	04713	1N963BRL
A3W1021	131-0566-00			BUS,CONDUCTOR:DUMMY RES,0.094 OD X 0.225L	24546	OMA0207
A3W1022	131-0566-00			BUS,CONDUCTOR:DUMMY RES,0.094 OD X 0.225L	24546	OMA0207
A3W1050	131-0566-00			BUS,CONDUCTOR:DUMMY RES,0.094 OD X 0.225L	24546	OMA0207
A3W1060	131-0566-00			BUS,CONDUCTOR:DUMMY RES,0.094 OD X 0.225L	24546	OMA0207
A3W1102	131-0566-00			BUS,CONDUCTOR:DUMMY RES,0.094 OD X 0.225L	24546	OMA0207
A3Y1050	120-1417-00			TRANSFORMER,RF:POWER HIGH FREQUENCY	54937	500-2311

Component Number	Tektronix Part No.	Serial No. Effective	Dscont	Name & Description	Mfr. Code	Mfr. Part No.
A4	670-9493-02	B010100	B049999	CIRCUIT BD ASSY:READOUT	80009	670949302
A4C2830	281-0909-00			CAP,FXD,CER DI:0.022UF,20%,50V	04222	SA105C223MAA
A4C2835	281-0909-00			CAP,FXD,CER DI:0.022UF,20%,50V	04222	SA105C223MAA
A4C2851	281-0909-00			CAP,FXD,CER DI:0.022UF,20%,50V	04222	SA105C223MAA
A4C2855	281-0909-00			CAP,FXD,CER DI:0.022UF,20%,50V	04222	SA105C223MAA
A4C2860	281-0909-00			CAP,FXD,CER DI:0.022UF,20%,50V	04222	SA105C223MAA
A4C2885	281-0909-00			CAP,FXD,CER DI:0.022UF,20%,50V	04222	SA105C223MAA
A4C2901	281-0909-00			CAP,FXD,CER DI:0.022UF,20%,50V	04222	SA105C223MAA
A4C2911	281-0773-00			CAP,FXD,CER DI:0.01UF,10%,100V	TK1743	CGB103KEX
A4C2912	281-0909-00			CAP,FXD,CER DI:0.022UF,20%,50V	04222	SA105C223MAA
A4C2913	281-0909-00			CAP,FXD,CER DI:0.022UF,20%,50V	04222	SA105C223MAA
A4C2926	281-0909-00			CAP,FXD,CER DI:0.022UF,20%,50V	04222	SA105C223MAA
A4C2940	281-0909-00			CAP,FXD,CER DI:0.022UF,20%,50V	04222	SA105C223MAA
A4C2950	281-0909-00			CAP,FXD,CER DI:0.022UF,20%,50V	04222	SA105C223MAA
A4C2960	281-0909-00			CAP,FXD,CER DI:0.022UF,20%,50V	04222	SA105C223MAA
A4C2970	281-0909-00			CAP,FXD,CER DI:0.022UF,20%,50V	04222	SA105C223MAA
A4C2980	281-0909-00			CAP,FXD,CER DI:0.022UF,20%,50V	04222	SA105C223MAA
A4C2990	281-0909-00			CAP,FXD,CER DI:0.022UF,20%,50V	04222	SA105C223MAA
A4R2805	313-1472-00			RES,FXD,FILM:4.7K OHM,5%,0.2W	91637	CCF50-2-47000J
A4R2830	313-1101-00			RES,FXD,FILM:100 OHM,5%,0.2W	91637	CCF50-2-100R0J
A4R2841	313-1103-00			RES,FXD,FILM:10K OHM,5%,0.2W	91637	CCF50-2-10001J
A4R2842	313-1103-00			RES,FXD,FILM:10K OHM,5%,0.2W	91637	CCF50-2-10001J
A4R2843	313-1472-00			RES,FXD,FILM:4.7K OHM,5%,0.2W	91637	CCF50-2-47000J
A4R2844	313-1472-00			RES,FXD,FILM:4.7K OHM,5%,0.2W	91637	CCF50-2-47000J
A4R2850	313-1472-00			RES,FXD,FILM:4.7K OHM,5%,0.2W	91637	CCF50-2-47000J
A4R2901	313-1103-00			RES,FXD,FILM:10K OHM,5%,0.2W	91637	CCF50-2-10001J
A4R2902	313-1103-00			RES,FXD,FILM:10K OHM,5%,0.2W	91637	CCF50-2-10001J
A4R2903	321-1296-03			RES,FXD,FILM:12.0K OHM,0.25%,0.125W,TC=T2	19701	5033RC12K00C
A4R2905	321-0816-03			RES,FXD,FILM:5K OHM,0.25%,0.125W,TC=T2	TK1727	MPR24-2322-141
A4R2910	321-0685-00			RES,FXD,FILM:30K OHM,0.5%,0.125W,TC=T2	19701	5033RC30K00D
A4R2911	321-0685-00			RES,FXD,FILM:30K OHM,0.5%,0.125W,TC=T2	19701	5033RC30K00D
A4R2912	313-1102-00			RES,FXD,FILM:1K OHM,5%,0.2W	91637	CCF50-2-10000J
A4R2913	321-0198-00			RES,FXD,FILM:1.13K OHM,1%,0.125W,TC=T0	91637	CMF55116G11300F
A4R2914	322-3306-00			RES,FXD:METAL FILM;15K OHM,1%,0.2W,TC=100	91637	CCF50-2-G1502F
A4R2915	313-1202-00			RES,FXD,FILM:2K OHM,5%,0.2W	91637	CCF50-2-20000J
A4R2916	322-3414-00			RES,FXD:METAL FILM;200K OHM,1%,0.2W,TC=100	91637	CCF501G20002F
A4R2917	322-3385-00			RES,FXD:METAL FILM;100K OHM,1%,0.2W,TC=100	91637	CCF501G10002F
A4R2918	311-2270-00			RES,VAR,TRMR:CERMET;10K OHM,20%,0.5W	TK2073	GF06VT2 103 M L
A4R2919	321-0756-00			RES,FXD,FILM:50K OHM,1%,0.125W,TC=T0	91637	CMF55116G50001F
A4R2920	313-1334-00			RES,FXD,FILM:330K OHM,5%,0.2W	91637	CCF502-33002J

Component Number	Tektronix Part No.	Serial No. Effective	Dscont	Name & Description	Mfr. Code	Mfr. Part No.
A4R2921	322-3297-00			RES,FXD:METAL FILM;12.1K OHM,1%,0.2W,TC=100	91637	CCF501G12101F
A4R2922	321-0756-00			RES,FXD,FILM:50K OHM,1%,0.125W,TC=T0	91637	CMF55116G50001F
A4R2923	321-0385-00			RES,FXD,FILM:100K OHM,1%,0.125W,TC=T0	91637	CMF55116G10002F
A4R2924	322-3414-00			RES,FXD:METAL FILM;200K OHM,1%,0.2W,TC=100	91637	CCF501G20002F
A4R2925	321-0235-02			RES,FXD,FILM:2.74K OHM,0.5%,0.125W,TC=T2	19701	5033RC2K740D
A4R2926	322-3222-00	B010100	B011175	RES,FXD:METAL FILM;2K OHM,1%,0.2W,TC=100	91637	CCF501G20000F
A4R2926	322-3210-00	B011176		RES,FXD:METAL FILM;1.5K OHM,1%,0.2W,TC=100	91637	CCF501G15000F
A4R2927	322-3318-00			RES,FXD:METAL FILM;20K OHM,1%,0.2W,TC=100	91637	CCF501G20001F
A4R2928	313-1472-00			RES,FXD,FILM:4.7K OHM,5%,0.2W	91637	CCF50-2-47000J
A4R2929	313-1472-00			RES,FXD,FILM:4.7K OHM,5%,0.2W	91637	CCF50-2-47000J
A4R2930	313-1152-00			RES,FXD,FILM:1.5K OHM,5%,0.2W	91637	CCF50-2-15000J
A4R2931	311-2258-00	B010100	B011175	RES,VAR,TRMR:CERMET;1K OHM,20%,0.5W	TK2073	GF06V2 102 M L2
A4R2931	311-2270-00	B011176		RES,VAR,TRMR:CERMET;10K OHM,20%,0.5W	TK2073	GF06VT2 103 M L
A4R2932	322-3414-00			RES,FXD:METAL FILM;200K OHM,1%,0.2W	91637	CCF501G20002F
A4R2933	322-3385-00			RES,FXD:METAL FILM;100K OHM,1%,0.2W	91637	CCF501G10002F
A4R2934	322-3297-00			RES,FXD:METAL FILM;12.1K OHM,1%,0.2W,TC=100	91637	CCF501G12101F
A4R2940	313-1102-00			RES,FXD,FILM:1K OHM,5%,0.2W	91637	CCF50-2-10000J
A4R2945	313-1471-00			RES,FXD,FILM:470 OHM,5%,0.2W	91637	CCF50-2-470R0J
A4R2975	313-1472-00			RES,FXD,FILM:4.7K OHM,5%,0.2W	91637	CCF50-2-47000J
A4R2985	313-1102-00			RES,FXD,FILM:1K OHM,5%,0.2W	91637	CCF50-2-10000J
A4U2800	156-0514-00			IC,MISC:CMOS,ANALOG MUX;DUAL 4 CHANNEL	04713	MC14052BCP
A4U2805	156-0514-00			IC,MISC:CMOS,ANALOG MUX;DUAL 4 CHANNEL	04713	MC14052BCP
A4U2810	156-0382-00			IC,DIGITAL:LSTTL,GATE;QUAD 2-INPUT NAND	01295	SN74LS00N
A4U2820	156-1191-01			IC,LINEAR:BIFET,OP-AMP;6MV VOS	01295	TL072ACP
A4U2830	156-1172-00			IC,DIGITAL:LSTTL,COUNTER;DUAL 4-BIT BINARY	01295	SN74LS393N
A4U2835	156-0479-00			IC,DIGITAL:LSTTL,GATES;QUAD 2-INPUT	01295	SN74LS32N
A4U2850	156-0388-00			IC,DIGITAL:LSTTL,FLIP FLOP;DUAL D W/SET	01295	SN74LS74AN
A4U2855	156-0383-00			IC,DIGITAL:LSTTL,GATES;QUAD 2-INPUT NOR	01295	SN74LS02N
A4U2860	156-0975-00			IC,DIGITAL:LSTTL,SHIFT REGISTER;8-BIT	01295	SN74LS299
A4U2865	156-0796-00			IC,DIGITAL:CMOS,SHIFT REGISTER;8-STAGE	04713	MC14094BCP
A4U2870	156-1172-00			IC,DIGITAL:LSTTL,COUNTER;DUAL 4-BIT BINARY	01295	SN74LS393N
A4U2880	156-0388-00			IC,DIGITAL:LSTTL,FLIP FLOP;DUAL D W/SET	01295	SN74LS74AN
A4U2885	156-0386-00			IC,DIGITAL:LSTTL,GATES;TRIPLE 3-INPUT NAND	01295	SN74LS10N
A4U2890	156-0382-00			IC,DIGITAL:LSTTL,GATE;QUAD 2-INPUT NAND	01295	SN74LS00N
A4U2900	156-0386-00			IC,DIGITAL:LSTTL,GATES;TRIPLE 3-INPUT NAND	01295	SN74LS10N
A4U2905	156-1702-00			IC,DIGITAL:TTL,REGISTER;10-BIT BUFFERED	34335	AM29821PC
A4U2910	156-1555-00			IC,CONVERTER:BIPOLAR,D/A;8 BIT,200NS	34335	AM6080PC
A4U2920	156-1594-00			IC,MEMORY:NMOS,SRAM;2K X 8,150NS	0B0A9	DS2016
A4U2930	160-1631-02			MICROCKT,DGTL:4096 X 8 EPROM,PRGM	80009	160-1631-02
A4U2935	156-0956-00			IC,DIGITAL:LSTTL,BUFFER/DRIVER;OCTAL	01295	SN74LS244N3

Component Number	Tektronix Part No.	Serial No. Effective	Dscont	Name & Description	Mfr. Code	Mfr. Part No.
A4U2940	156-1172-00			IC,DIGITAL:LSTTL,COUNTER;DUAL 4-BIT BINARY	01295	SN74LS393N
A4U2950	156-0388-00			IC,DIGITAL:LSTTL,FLIP FLOP;DUAL D W/SET	01295	SN74LS74AN
A4U2960	156-0796-00			IC,DIGITAL:CMOS,SHIFT REGISTER;8-STAGE	04713	MC14094BCP
A4U2965	156-0382-00			IC,DIGITAL:LSTTL,GATE;QUAD 2-INPUT NAND	01295	SN74LS00N
A4U2970	156-0480-02			IC,DIGITAL:LSTTL,GATES	01295	SN74LS08N
A4U2980	156-0382-00			IC,DIGITAL:LSTTL,GATE;QUAD 2-INPUT NAND	01295	SN74LS00N
A4U2985	156-0768-00			IC,DIGITAL:LSTTL,SHIFT REGISTER;4-BIT	01295	SN74LS194AN
A4U2990	156-0381-00			IC,DIGITAL:LSTTL,GATES;QUAD 2-INPUT XOR	01295	SN74LS86AN
A4U2995	156-0651-00			IC,DIGITAL:LSTTL,SHIFT REGISTER;8-BIT SIPO	01295	SN74LS164N
A4VR2805	152-0217-00			DIODE,ZENER:,;8.2V,5%,0.4W	04713	SZG20RL
A4VR2925	152-0662-00			DIODE,ZENER:,;5V,1%,0.4W	04713	SZG195RL
A4W411	175-4581-01			CA ASSY,SP,ELEC:26,28 AWG,2.25 L,RIBBON	53387	ORDER BY DESC
A4W2851	131-0566-00			BUS,CONDUCTOR:DUMMY RES,0.094 OD X 0.225L	24546	OMA0207
A4W2913	131-0566-00			BUS,CONDUCTOR:DUMMY RES,0.094 OD X 0.225L	24546	OMA0207

Component Number	Tektronix Part No.	Serial No. Effective	Dscont	Name & Description	Mfr. Code	Mfr. Part No.
A5	670-9052-02	B010100	B049999	CIRCUIT BD ASSY:DIGITAL CONTROL (DOES NOT INCLUDE U2160 AND U2260)	80009	670905202
A5BT2570	146-0049-00			BATTERY,STORAGE:3.5V,750MAH,	81855	LTC-7P
A5C2010	290-0943-02			CAP,FXD,ELCTLT:47UF,20%,25V	1W344	SME25VB47RM5X11
A5C2011	290-0943-02			CAP,FXD,ELCTLT:47UF,20%,25V	1W344	SME25VB47RM5X11
A5C2101	281-0909-00			CAP,FXD,CER DI:0.022UF,20%,50V	04222	SA105C223MAA
A5C2110	281-0814-00			CAP,FXD,CER DI:100 PF,10%,100V	TK1743	CGB101KEN
A5C2111	281-0909-00			CAP,FXD,CER DI:0.022UF,20%,50V	04222	SA105C223MAA
A5C2112	281-0909-00			CAP,FXD,CER DI:0.022UF,20%,50V	04222	SA105C223MAA
A5C2113	290-0943-02			CAP,FXD,ELCTLT:47UF,20%,25V	1W344	SME25VB47RM5X11
A5C2160	281-0909-00			CAP,FXD,CER DI:0.022UF,20%,50V	04222	SA105C223MAA
A5C2220	281-0909-00			CAP,FXD,CER DI:0.022UF,20%,50V	04222	SA105C223MAA
A5C2221	281-0909-00			CAP,FXD,CER DI:0.022UF,20%,50V	04222	SA105C223MAA
A5C2230	281-0909-00			CAP,FXD,CER DI:0.022UF,20%,50V	04222	SA105C223MAA
A5C2240	281-0909-00			CAP,FXD,CER DI:0.022UF,20%,50V	04222	SA105C223MAA
A5C2320	281-0909-00			CAP,FXD,CER DI:0.022UF,20%,50V	04222	SA105C223MAA
A5C2321	285-1301-01			CAP,FXD,MTLZD:0.47UF,10%,50V	TK1913	MKS 2 .47/50 OR
A5C2322	285-1348-00			CAP,FXD,MTLZD:0.22UF,10%,63V	TK1913	MKS2 0.22 MFD 1
A5C2330	285-1301-01			CAP,FXD,MTLZD:0.47UF,10%,50V	TK1913	MKS 2 .47/50 OR
A5C2331	285-1348-00			CAP,FXD,MTLZD:0.22UF,10%,63V	TK1913	MKS2 0.22 MFD 1
A5C2332	285-1300-01			CAP,FXD,MTLZD:0.1UF,10%,63V	TK1913	MKS2 0.1/63/10
A5C2333	285-1300-01			CAP,FXD,MTLZD:0.1UF,10%,63V	TK1913	MKS2 0.1/63/10
A5C2340	281-0909-00			CAP,FXD,CER DI:0.022UF,20%,50V	04222	SA105C223MAA
A5C2350	290-0527-00			CAP,FXD,ELCTLT:15UF,20%,20V	D5243	ETP-3G 15UF 20V
A5C2351	281-0909-00			CAP,FXD,CER DI:0.022UF,20%,50V	04222	SA105C223MAA
A5C2360	281-0909-00			CAP,FXD,CER DI:0.022UF,20%,50V	04222	SA105C223MAA
A5C2420	290-0943-02			CAP,FXD,ELCTLT:47UF,20%,25V	1W344	SME25VB47RM5X11
A5C2421	285-1300-01			CAP,FXD,MTLZD:0.1UF,10%,63V	TK1913	MKS2 0.1/63/10
A5C2422	281-0791-00			CAP,FXD,CER DI:270PF,10%,100V	04222	SA102C271KAA
A5C2430	285-1301-01			CAP,FXD,MTLZD:0.47UF,10%,50V	TK1913	MKS 2 .47/50
A5C2431	285-1348-00			CAP,FXD,MTLZD:0.22UF,10%,63V	TK1913	MKS2 0.22 MFD 1
A5C2432	285-1348-00			CAP,FXD,MTLZD:0.22UF,10%,63V	TK1913	MKS2 0.22 MFD 1
A5C2450	281-0909-00			CAP,FXD,CER DI:0.022UF,20%,50V	04222	SA105C223MAA
A5C2470	290-0527-00			CAP,FXD,ELCTLT:15UF,20%,20V	D5243	ETP-3G 15UF 20V
A5C2501	281-0909-00			CAP,FXD,CER DI:0.022UF,20%,50V	04222	SA105C223MAA
A5C2510	281-0909-00			CAP,FXD,CER DI:0.022UF,20%,50V	04222	SA105C223MAA
A5C2511	281-0791-00			CAP,FXD,CER DI:270PF,10%,100V	04222	SA102C271KAA
A5C2520	281-0909-00			CAP,FXD,CER DI:0.022UF,20%,50V	04222	SA105C223MAA
A5C2521	281-0909-00			CAP,FXD,CER DI:0.022UF,20%,50V	04222	SA105C223MAA
A5C2530	281-0909-00			CAP,FXD,CER DI:0.022UF,20%,50V	04222	SA105C223MAA
A5C2550	281-0819-00			CAP,FXD,CER DI:33 PF,5%,50V	04222	SA102A330JAA

Component Number	Tektronix Part No.	Serial No. Effective	Dscont	Name & Description	Mfr. Code	Mfr. Part No.
A5C2551	281-0816-00			CAP,FXD,CER DI:82 PF,5%,100V	TK1743	CGB820JEN
A5C2552	281-0909-00			CAP,FXD,CER DI:0.022UF,20%,50V	04222	SA105C223MAA
A5C2601	281-0909-00			CAP,FXD,CER DI:0.022UF,20%,50V	04222	SA105C223MAA
A5C2610	281-0909-00			CAP,FXD,CER DI:0.022UF,20%,50V	04222	SA105C223MAA
A5C2620	281-0909-00			CAP,FXD,CER DI:0.022UF,20%,50V	04222	SA105C223MAA
A5C2621	285-1300-01			CAP,FXD,MTLZD:0.1UF,10%,63V	TK1913	MKS2 0.1/63/10
A5C2622	285-1348-00			CAP,FXD,MTLZD:0.22UF,10%,63V	TK1913	MKS2 0.22 MFD 1
A5C2630	285-1300-01			CAP,FXD,MTLZD:0.1UF,10%,63V	TK1913	MKS2 0.1/63/10
A5C2631	285-1348-00			CAP,FXD,MTLZD:0.22UF,10%,63V	TK1913	MKS2 0.22 MFD 1
A5C2632	281-0909-00			CAP,FXD,CER DI:0.022UF,20%,50V	04222	SA105C223MAA
A5C2640	285-1300-01			CAP,FXD,MTLZD:0.1UF,10%,63V	TK1913	MKS2 0.1/63/10
A5C2650	281-0909-00			CAP,FXD,CER DI:0.022UF,20%,50V	04222	SA105C223MAA
A5C2660	281-0909-00			CAP,FXD,CER DI:0.022UF,20%,50V	04222	SA105C223MAA
A5C2720	285-1301-01			CAP,FXD,MTLZD:0.47UF,10%,50V	TK1913	MKS 2 .47/50
A5C2721	285-1348-00			CAP,FXD,MTLZD:0.22UF,10%,63V	TK1913	MKS2 0.22 MFD 1
A5C2730	285-1348-00			CAP,FXD,MTLZD:0.22UF,10%,63V	TK1913	MKS2 0.22 MFD 1
A5C2731	285-1301-01			CAP,FXD,MTLZD:0.47UF,10%,50V	TK1913	MKS 2 .47/50
A5C2732	285-1301-01			CAP,FXD,MTLZD:0.47UF,10%,50V	TK1913	MKS 2 .47/50
A5C2733	285-1301-01			CAP,FXD,MTLZD:0.47UF,10%,50V	TK1913	MKS 2 .47/50
A5C2740	281-0909-00			CAP,FXD,CER DI:0.022UF,20%,50V	04222	SA105C223MAA
A5CR2070	152-0141-02			DIODE,SIG:,ULTRA FAST;40V,150MA,4NS,2PF	27014	FDH9427
A5CR2071	152-0141-02			DIODE,SIG:,ULTRA FAST;40V,150MA,4NS,2PF	27014	FDH9427
A5CR2170	152-0141-02			DIODE,SIG:,ULTRA FAST;40V,150MA,4NS,2PF	27014	FDH9427
A5CR2230	152-0141-02			DIODE,SIG:,ULTRA FAST;40V,150MA,4NS,2PF	27014	FDH9427
A5CR2231	152-0141-02			DIODE,SIG:,ULTRA FAST;40V,150MA,4NS,2PF	27014	FDH9427
A5CR2232	152-0141-02			DIODE,SIG:,ULTRA FAST;40V,150MA,4NS,2PF	27014	FDH9427
A5CR2233	152-0141-02			DIODE,SIG:,ULTRA FAST;40V,150MA,4NS,2PF	27014	FDH9427
A5CR2370	152-0951-00			DIODE,SIG:SCHTKY,;60V,2.25PF	50088	1N6263
A5CR2371	152-0951-00			DIODE,SIG:SCHTKY,;60V,2.25PF	50088	1N6263
A5CR2420	152-0141-02			DIODE,SIG:,ULTRA FAST;40V,150MA,4NS,2PF	27014	FDH9427
A5CR2610	152-0141-02			DIODE,SIG:,ULTRA FAST;40V,150MA,4NS,2PF	27014	FDH9427
A5CR2620	152-0141-02			DIODE,SIG:,ULTRA FAST;40V,150MA,4NS,2PF	27014	FDH9427
A5CR2621	152-0141-02			DIODE,SIG:,ULTRA FAST;40V,150MA,4NS,2PF	27014	FDH9427
A5CR2622	152-0141-02			DIODE,SIG:,ULTRA FAST;40V,150MA,4NS,2PF	27014	FDH9427
A5CR2630	152-0141-02			DIODE,SIG:,ULTRA FAST;40V,150MA,4NS,2PF	27014	FDH9427
A5CR2631	152-0141-02			DIODE,SIG:,ULTRA FAST;40V,150MA,4NS,2PF	27014	FDH9427
A5CR2640	152-0141-02			DIODE,SIG:,ULTRA FAST;40V,150MA,4NS,2PF	27014	FDH9427
A5CR2770	152-0951-00			DIODE,SIG:SCHTKY,;60V,2.25PF	50088	1N6263
A5J251	131-3360-00			CONN,HDR:PCB,;MALE,STR,2 X 10,0.1 CTR	53387	2520-6002UB
A5J500	131-3364-00			CONN,HDR:PCB,;MALE,STR,2 X 17,0.1 CTR	53387	2534-6002UB

Component Number	Tektronix Part No.	Serial No. Effective	Dscont	Name & Description	Mfr. Code	Mfr. Part No.
A5J501	131-0608-00			TERMINAL,PIN:PRESSFIT/PCB,;MALE,STR (QUANTITY OF 3)	22526	48283-018
A5J503	131-0608-00			TERMINAL,PIN:PRESSFIT/PCB,;MALE,STR (QUANTITY OF 3)	22526	48283-018
A5J651	131-3360-00			CONN,HDR:PCB,;MALE,STR,2 X 10,0.1 CTR	53387	2520-6002UB
A5J652	131-3360-00			CONN,HDR:PCB,;MALE,STR,2 X 10,0.1 CTR	53387	2520-6002UB
A5Q2070	151-0341-00			TRANSISTOR,SIG:BIPOLAR,NPN;45V,50MA,40MHZ	04713	MPS6520
A5Q2170	151-0342-00			TRANSISTOR,SIG:BIPOLAR,PNP;60V,50MA,40MHZ	04713	MPS4249
A5Q2270	151-0342-00			TRANSISTOR,SIG:BIPOLAR,PNP;60V,50MA,40MHZ	04713	MPS4249
A5Q2320	151-0341-00			TRANSISTOR,SIG:BIPOLAR,NPN;45V,50MA,40MHZ	04713	MPS6520
A5R2001	313-1101-00			RES,FXD,FILM:100 OHM,5%,0.2W	91637	CCF50-2-100R0J
A5R2002	313-1101-00			RES,FXD,FILM:100 OHM,5%,0.2W	91637	CCF50-2-100R0J
A5R2004	313-1101-00			RES,FXD,FILM:100 OHM,5%,0.2W	91637	CCF50-2-100R0J
A5R2005	313-1101-00			RES,FXD,FILM:100 OHM,5%,0.2W	91637	CCF50-2-100R0J
A5R2006	313-1101-00			RES,FXD,FILM:100 OHM,5%,0.2W	91637	CCF50-2-100R0J
A5R2007	313-1101-00			RES,FXD,FILM:100 OHM,5%,0.2W	91637	CCF50-2-100R0J
A5R2010	311-2234-00			RES,VAR,TRMR:CERMET;5K OHM,20%,0.5W	TK2073	GF06UT2 502 M L
A5R2011	322-3431-00			RES,FXD,FILM:301K OHM,1%,0.2W,TC=T0	91637	CCF501G30102F
A5R2012	322-3289-02			RES,FXD,FILM:10K OHM,0.5%,0.2W,TC=T2	91637	CCF501D10001D
A5R2013	322-3289-02			RES,FXD,FILM:10K OHM,0.5%,0.2W,TC=T2	91637	CCF501D10001D
A5R2070	313-1512-00			RES,FXD,FILM:5.1K OHM,5%,0.2W	91637	CCF50-2-51000J
A5R2101	313-1101-00			RES,FXD,FILM:100 OHM,5%,0.2W	91637	CCF50-2-100R0J
A5R2102	313-1101-00			RES,FXD,FILM:100 OHM,5%,0.2W	91637	CCF50-2-100R0J
A5R2103	313-1101-00			RES,FXD,FILM:100 OHM,5%,0.2W	91637	CCF50-2-100R0J
A5R2104	313-1101-00			RES,FXD,FILM:100 OHM,5%,0.2W	91637	CCF50-2-100R0J
A5R2110	313-1103-00			RES,FXD,FILM:10K OHM,5%,0.2W	91637	CCF50-2-10001J
A5R2170	322-3235-00			RES,FXD:METAL FILM;2.74K OHM,1%,0.2W,TC=100	91637	CCF501G27400F
A5R2171	313-1102-00			RES,FXD,FILM:1K OHM,5%,0.2W	91637	CCF50-2-10000J
A5R2172	313-1102-00			RES,FXD,FILM:1K OHM,5%,0.2W	91637	CCF50-2-10000J
A5R2201	313-1103-00			RES,FXD,FILM:10K OHM,5%,0.2W	91637	CCF50-2-10001J
A5R2202	313-1103-00			RES,FXD,FILM:10K OHM,5%,0.2W	91637	CCF50-2-10001J
A5R2203	313-1103-00			RES,FXD,FILM:10K OHM,5%,0.2W	91637	CCF50-2-10001J
A5R2204	313-1103-00			RES,FXD,FILM:10K OHM,5%,0.2W	91637	CCF50-2-10001J
A5R2205	313-1103-00			RES,FXD,FILM:10K OHM,5%,0.2W	91637	CCF50-2-10001J
A5R2206	313-1103-00			RES,FXD,FILM:10K OHM,5%,0.2W	91637	CCF50-2-10001J
A5R2220	313-1681-00			RES,FXD,FILM:680 OHM,5%,0.2W	91637	CCF50-2-680R0J
A5R2230	322-3482-02			RES,FXD,FILM:14.2K OHM,5%,0.2W,TC=T0	91637	CCF501D14201D
A5R2231	313-1102-00			RES,FXD,FILM:1K OHM,5%,0.2W	91637	CCF50-2-10000J
A5R2232	313-1102-00			RES,FXD,FILM:1K OHM,5%,0.2W	91637	CCF50-2-10000J
A5R2241	313-1104-00			RES,FXD,FILM:100K OHM,5%,0.2W	91637	CCF50-2-10002J
A5R2242	313-1104-00			RES,FXD,FILM:100K OHM,5%,0.2W	91637	CCF50-2-10002J

Component Number	Tektronix Part No.	Serial No. Effective	Dscont	Name & Description	Mfr. Code	Mfr. Part No.
A5R2244	313-1103-00			RES,FXD,FILM:10K OHM,5%,0.2W	91637	CCF50-2-10001J
A5R2250	313-1102-00			RES,FXD,FILM:1K OHM,5%,0.2W	91637	CCF50-2-10000J
A5R2251	313-1102-00			RES,FXD,FILM:1K OHM,5%,0.2W	91637	CCF50-2-10000J
A5R2301	313-1103-00			RES,FXD,FILM:10K OHM,5%,0.2W	91637	CCF50-2-10001J
A5R2302	313-1103-00			RES,FXD,FILM:10K OHM,5%,0.2W	91637	CCF50-2-10001J
A5R2303	313-1103-00			RES,FXD,FILM:10K OHM,5%,0.2W	91637	CCF50-2-10001J
A5R2304	313-1103-00			RES,FXD,FILM:10K OHM,5%,0.2W	91637	CCF50-2-10001J
A5R2305	313-1103-00			RES,FXD,FILM:10K OHM,5%,0.2W	91637	CCF50-2-10001J
A5R2306	313-1103-00			RES,FXD,FILM:10K OHM,5%,0.2W	91637	CCF50-2-10001J
A5R2320	313-1203-00			RES,FXD,FILM:20K OHM,5%,0.2W	91637	CCF50-2-20001J
A5R2330	322-3360-02			RES,FXD,FILM:54.9K OHM,0.5%,0.2W,TC=T2	91637	CCF501D54901D
A5R2331	322-3235-00			RES,FXD:METAL FILM;2.74K OHM,1%,0.2W,TC=100	91637	CCF501G27400F
A5R2332	322-3193-00			RES,FXD:METAL FILM;1K OHM,1%,0.2W,TC=100	91637	CCF501G10000F
A5R2333	322-3235-00			RES,FXD:METAL FILM;2.74K OHM,1%,0.2W,TC=100	91637	CCF501G27400F
A5R2334	322-3193-00			RES,FXD:METAL FILM;1K OHM,1%,0.2W,TC=100	91637	CCF501G10000F
A5R2340	313-1103-00			RES,FXD,FILM:10K OHM,5%,0.2W	91637	CCF50-2-10001J
A5R2341	313-1103-00			RES,FXD,FILM:10K OHM,5%,0.2W	91637	CCF50-2-10001J
A5R2342	313-1103-00			RES,FXD,FILM:10K OHM,5%,0.2W	91637	CCF50-2-10001J
A5R2343	313-1104-00			RES,FXD,FILM:100K OHM,5%,0.2W	91637	CCF50-2-10002J
A5R2344	313-1104-00			RES,FXD,FILM:100K OHM,5%,0.2W	91637	CCF50-2-10002J
A5R2345	313-1102-00			RES,FXD,FILM:1K OHM,5%,0.2W	91637	CCF50-2-10000J
A5R2346	313-1103-00			RES,FXD,FILM:10K OHM,5%,0.2W	91637	CCF50-2-10001J
A5R2370	313-1102-00			RES,FXD,FILM:1K OHM,5%,0.2W	91637	CCF50-2-10000J
A5R2401	313-1103-00			RES,FXD,FILM:10K OHM,5%,0.2W	91637	CCF50-2-10001J
A5R2402	313-1103-00			RES,FXD,FILM:10K OHM,5%,0.2W	91637	CCF50-2-10001J
A5R2403	313-1103-00			RES,FXD,FILM:10K OHM,5%,0.2W	91637	CCF50-2-10001J
A5R2404	313-1103-00			RES,FXD,FILM:10K OHM,5%,0.2W	91637	CCF50-2-10001J
A5R2405	313-1104-00			RES,FXD,FILM:100K OHM,5%,0.2W	91637	CCF50-2-10002J
A5R2406	313-1104-00			RES,FXD,FILM:100K OHM,5%,0.2W	91637	CCF50-2-10002J
A5R2407	313-1103-00			RES,FXD,FILM:10K OHM,5%,0.2W	91637	CCF50-2-10001J
A5R2408	313-1103-00			RES,FXD,FILM:10K OHM,5%,0.2W	91637	CCF50-2-10001J
A5R2409	313-1103-00			RES,FXD,FILM:10K OHM,5%,0.2W	91637	CCF50-2-10001J
A5R2410	313-1104-00			RES,FXD,FILM:100K OHM,5%,0.2W	91637	CCF50-2-10002J
A5R2411	313-1103-00			RES,FXD,FILM:10K OHM,5%,0.2W	91637	CCF50-2-10001J
A5R2412	313-1104-00			RES,FXD,FILM:100K OHM,5%,0.2W	91637	CCF50-2-10002J
A5R2413	313-1103-00			RES,FXD,FILM:10K OHM,5%,0.2W	91637	CCF50-2-10001J
A5R2414	313-1103-00			RES,FXD,FILM:10K OHM,5%,0.2W	91637	CCF50-2-10001J
A5R2415	313-1103-00			RES,FXD,FILM:10K OHM,5%,0.2W	91637	CCF50-2-10001J
A5R2416	313-1103-00			RES,FXD,FILM:10K OHM,5%,0.2W	91637	CCF50-2-10001J
A5R2417	313-1103-00			RES,FXD,FILM:10K OHM,5%,0.2W	91637	CCF50-2-10001J

Component Number	Tektronix Part No.	Serial No. Effective	Dscont	Name & Description	Mfr. Code	Mfr. Part No.
A5R2420	313-1103-00			RES,FXD,FILM:10K OHM,5%,0.2W	91637	CCF50-2-10001J
A5R2421	322-3300-02			RES,FXD,FILM:13K OHM,0.5%,0.2W,TC=T2	91637	CCF501D13001D
A5R2422	322-3482-02			RES,FXD,FILM:14.2K OHM,5%,0.2W,TC=TO	91637	CCF501D14201D
A5R2430	322-3289-02			RES,FXD,FILM:10K OHM,0.5%,0.2W,TC=T2	91637	CCF501D10001D
A5R2431	313-1101-00			RES,FXD,FILM:100 OHM,5%,0.2W	91637	CCF50-2-100R0J
A5R2432	322-3325-00			RES,FXD,FILM:23.7K OHM,1%,0.2W,TC=T0	91637	CCF501G23701F
A5R2433	322-3289-02			RES,FXD,FILM:10K OHM,0.5%,0.2W,TC=T2	91637	CCF501D10001D
A5R2434	322-3289-02			RES,FXD,FILM:10K OHM,0.5%,0.2W,TC=T2	91637	CCF501D10001D
A5R2440	313-1104-00			RES,FXD,FILM:100K OHM,5%,0.2W	91637	CCF50-2-10002J
A5R2441	313-1104-00			RES,FXD,FILM:100K OHM,5%,0.2W	91637	CCF50-2-10002J
A5R2442	313-1104-00			RES,FXD,FILM:100K OHM,5%,0.2W	91637	CCF50-2-10002J
A5R2443	313-1103-00			RES,FXD,FILM:10K OHM,5%,0.2W	91637	CCF50-2-10001J
A5R2444	313-1103-00			RES,FXD,FILM:10K OHM,5%,0.2W	91637	CCF50-2-10001J
A5R2470	313-1681-00			RES,FXD,FILM:680 OHM,5%,0.2W	91637	CCF50-2-680ROJ
A5R2471	313-1681-00			RES,FXD,FILM:680 OHM,5%,0.2W	91637	CCF50-2-680ROJ
A5R2500	313-1331-00			RES,FXD,FILM:330 OHM,5%,0.2W	91637	CCF50-2-330ROJ
A5R2501	313-1103-00			RES,FXD,FILM:10K OHM,5%,0.2W	91637	CCF50-2-10001J
A5R2502	313-1103-00			RES,FXD,FILM:10K OHM,5%,0.2W	91637	CCF50-2-10001J
A5R2503	313-1103-00			RES,FXD,FILM:10K OHM,5%,0.2W	91637	CCF50-2-10001J
A5R2504	313-1103-00			RES,FXD,FILM:10K OHM,5%,0.2W	91637	CCF50-2-10001J
A5R2505	313-1103-00			RES,FXD,FILM:10K OHM,5%,0.2W	91637	CCF50-2-10001J
A5R2506	322-3235-00			RES,FXD:METAL FILM;2.74K OHM,1%,0.2W,TC=100	91637	CCF501G27400F
A5R2510	313-1103-00			RES,FXD,FILM:10K OHM,5%,0.2W	91637	CCF50-2-10001J
A5R2511	313-1102-00			RES,FXD,FILM:1K OHM,5%,0.2W	91637	CCF50-2-10000J
A5R2512	313-1102-00			RES,FXD,FILM:1K OHM,5%,0.2W	91637	CCF50-2-10000J
A5R2513	313-1103-00			RES,FXD,FILM:10K OHM,5%,0.2W	91637	CCF50-2-10001J
A5R2520	322-3177-02			RES,FXD,FILM:681 OHM,0.5%,0.2W,TC=T2	91637	CMF501D681ROD
A5R2521	322-3177-02			RES,FXD,FILM:681 OHM,0.5%,0.2W,TC=T2	91637	CMF501D681ROD
A5R2522	313-1103-00			RES,FXD,FILM:10K OHM,5%,0.2W	91637	CCF50-2-10001J
A5R2523	313-1683-00			RES,FXD,FILM:68K OHM,5%,0.2W	91637	CCF50-2-6800IJ
A5R2524	313-1683-00			RES,FXD,FILM:68K OHM,5%,0.2W	91637	CCF50-2-6800IJ
A5R2530	315-0106-00			RES,FXD,FILM:10M OHM,5%,0.25W	TK1727	SFR25 2322-181
A5R2531	313-1101-00			RES,FXD,FILM:100 OHM,5%,0.2W	91637	CCF50-2-100R0J
A5R2532	313-1683-00			RES,FXD,FILM:68K OHM,5%,0.2W	91637	CCF50-2-6800IJ
A5R2533	322-3235-00			RES,FXD:METAL FILM;2.74K OHM,1%,0.2W,TC=100	91637	CCF501G27400F
A5R2534	322-3235-00			RES,FXD:METAL FILM;2.74K OHM,1%,0.2W,TC=100	91637	CCF501G27400F
A5R2535	322-3235-00			RES,FXD:METAL FILM;2.74K OHM,1%,0.2W,TC=100	91637	CCF501G27400F
A5R2536	313-1103-00			RES,FXD,FILM:10K OHM,5%,0.2W	91637	CCF50-2-10001J
A5R2537	313-1102-00			RES,FXD,FILM:1K OHM,5%,0.2W	91637	CCF50-2-10000J
A5R2540	313-1103-00			RES,FXD,FILM:10K OHM,5%,0.2W	91637	CCF50-2-10001J

Component Number	Tektronix Part No.	Serial No. Effective	Dscont	Name & Description	Mfr. Code	Mfr. Part No.
A5R2541	313-1102-00			RES,FXD,FILM:1K OHM,5%,0.2W	91637	CCF50-2-10000J
A5R2542	313-1103-00			RES,FXD,FILM:10K OHM,5%,0.2W	91637	CCF50-2-10001J
A5R2543	313-1102-00			RES,FXD,FILM:1K OHM,5%,0.2W	91637	CCF50-2-10000J
A5R2544	313-1681-00			RES,FXD,FILM:680 OHM,5%,0.2W	91637	CCF50-2-680ROJ
A5R2545	313-1331-00			RES,FXD,FILM:330 OHM,5%,0.2W	91637	CCF50-2-330ROJ
A5R2560	313-1222-00			RES,FXD,FILM:2.2K OHM,5%,0.2W	91637	CCF50-2-22000J
A5R2601	313-1331-00			RES,FXD,FILM:330 OHM,5%,0.2W	91637	CCF50-2-330ROJ
A5R2602	313-1103-00			RES,FXD,FILM:10K OHM,5%,0.2W	91637	CCF50-2-10001J
A5R2603	313-1103-00			RES,FXD,FILM:10K OHM,5%,0.2W	91637	CCF50-2-10001J
A5R2604	322-3193-00			RES,FXD:METAL FILM;1K OHM,1%,0.2W,TC=100	91637	CCF501G10000F
A5R2610	313-1103-00			RES,FXD,FILM:10K OHM,5%,0.2W	91637	CCF50-2-10001J
A5R2611	313-1104-00			RES,FXD,FILM:100K OHM,5%,0.2W	91637	CCF50-2-10002J
A5R2612	313-1512-00			RES,FXD,FILM:5.1K OHM,5%,0.2W	91637	CCF50-2-51000J
A5R2613	313-1103-00			RES,FXD,FILM:10K OHM,5%,0.2W	91637	CCF50-2-10001J
A5R2620	313-1103-00			RES,FXD,FILM:10K OHM,5%,0.2W	91637	CCF50-2-10001J
A5R2621	313-1222-00			RES,FXD,FILM:2.2K OHM,5%,0.2W	91637	CCF50-2-22000J
A5R2622	313-1101-00			RES,FXD,FILM:100 OHM,5%,0.2W	91637	CCF50-2-100R0J
A5R2623	313-1222-00			RES,FXD,FILM:2.2K OHM,5%,0.2W	91637	CCF50-2-22000J
A5R2624	313-1512-00			RES,FXD,FILM:5.1K OHM,5%,0.2W	91637	CCF50-2-51000J
A5R2630	322-3193-00			RES,FXD:METAL FILM;1K OHM,1%,0.2W,TC=100	91637	CCF501G10000F
A5R2631	322-3235-00			RES,FXD:METAL FILM;2.74K OHM,1%,0.2W,TC=100	91637	CCF501G27400F
A5R2632	322-3193-00			RES,FXD:METAL FILM;1K OHM,1%,0.2W,TC=100	91637	CCF501G10000F
A5R2640	313-1103-00			RES,FXD,FILM:10K OHM,5%,0.2W	91637	CCF50-2-10001J
A5R2641	313-1103-00			RES,FXD,FILM:10K OHM,5%,0.2W	91637	CCF50-2-10001J
A5R2642	313-1103-00			RES,FXD,FILM:10K OHM,5%,0.2W	91637	CCF50-2-10001J
A5R2643	313-1103-00			RES,FXD,FILM:10K OHM,5%,0.2W	91637	CCF50-2-10001J
A5R2644	313-1103-00			RES,FXD,FILM:10K OHM,5%,0.2W	91637	CCF50-2-10001J
A5R2645	313-1103-00			RES,FXD,FILM:10K OHM,5%,0.2W	91637	CCF50-2-10001J
A5R2660	313-1103-00			RES,FXD,FILM:10K OHM,5%,0.2W	91637	CCF50-2-10001J
A5R2661	313-1103-00			RES,FXD,FILM:10K OHM,5%,0.2W	91637	CCF50-2-10001J
A5R2701	313-1103-00			RES,FXD,FILM:10K OHM,5%,0.2W	91637	CCF50-2-10001J
A5R2702	313-1103-00			RES,FXD,FILM:10K OHM,5%,0.2W	91637	CCF50-2-10001J
A5R2703	313-1103-00			RES,FXD,FILM:10K OHM,5%,0.2W	91637	CCF50-2-10001J
A5R2704	313-1103-00			RES,FXD,FILM:10K OHM,5%,0.2W	91637	CCF50-2-10001J
A5R2705	313-1103-00			RES,FXD,FILM:10K OHM,5%,0.2W	91637	CCF50-2-10001J
A5R2706	313-1103-00			RES,FXD,FILM:10K OHM,5%,0.2W	91637	CCF50-2-10001J
A5R2707	313-1103-00			RES,FXD,FILM:10K OHM,5%,0.2W	91637	CCF50-2-10001J
A5R2708	313-1103-00			RES,FXD,FILM:10K OHM,5%,0.2W	91637	CCF50-2-10001J
A5R2709	313-1103-00			RES,FXD,FILM:10K OHM,5%,0.2W	91637	CCF50-2-10001J
A5R2710	313-1103-00			RES,FXD,FILM:10K OHM,5%,0.2W	91637	CCF50-2-10001J

Component Number	Tektronix Part No.	Serial No. Effective	Dscont	Name & Description	Mfr. Code	Mfr. Part No.
A5R2711	313-1103-00			RES,FXD,FILM:10K OHM,5%,0.2W	91637	CCF50-2-10001J
A5R2712	313-1103-00			RES,FXD,FILM:10K OHM,5%,0.2W	91637	CCF50-2-10001J
A5R2720	313-1103-00			RES,FXD,FILM:10K OHM,5%,0.2W	91637	CCF50-2-10001J
A5R2721	313-1203-00			RES,FXD,FILM:20K OHM,5%,0.2W	91637	CCF50-2-20001J
A5R2730	313-1203-00			RES,FXD,FILM:20K OHM,5%,0.2W	91637	CCF50-2-20001J
A5R2731	315-0107-00			RES,FXD,FILM:100M OHM,5%,0.25W	01121	CB1075
A5R2732	315-0107-00			RES,FXD,FILM:100M OHM,5%,0.25W	01121	CB1075
A5R2733	322-3235-00			RES,FXD:METAL FILM;2.74K OHM,1%,0.2W,TC=100	91637	CCF501G27400F
A5R2734	313-1102-00			RES,FXD,FILM:1K OHM,5%,0.2W	91637	CCF50-2-10000J
A5R2735	313-1102-00			RES,FXD,FILM:1K OHM,5%,0.2W	91637	CCF50-2-10000J
A5R2740	322-3193-00			RES,FXD:METAL FILM;1K OHM,1%,0.2W,TC=100	91637	CCF501G10000F
A5R2741	313-1101-00			RES,FXD,FILM:100 OHM,5%,0.2W	91637	CCF50-2-100R0J
A5R2742	313-1103-00			RES,FXD,FILM:10K OHM,5%,0.2W	91637	CCF50-2-10001J
A5R2770	313-1103-00			RES,FXD,FILM:10K OHM,5%,0.2W	91637	CCF50-2-10001J
A5TP2070	131-0608-00			TERMINAL,PIN:PRESSFIT/PCB,;MALE,STR	22526	48283-018
A5TP2420	131-0608-00			TERMINAL,PIN:PRESSFIT/PCB,;MALE,STR	22526	48283-018
A5TP2421	131-0608-00			TERMINAL,PIN:PRESSFIT/PCB,;MALE,STR	22526	48283-018
A5TP2701	131-0608-00			TERMINAL,PIN:PRESSFIT/PCB,;MALE,STR	22526	48283-018
A5U2101	156-1589-00			IC,CONVERTER:BIPOLAR,D/A;12 BIT,CURRENT	24355	DAC312-040P
A5U2140	156-1342-01			IC,PROCESSOR:NMOS,MICROPROCESSOR	04713	MC68B02P
A5U2160	160-5370-04	B010100	B011531	MICROCKT,DGTL:65536 X 8 EPROM,PRGM	80009	160-5370-04
A5U2160	160-5370-05	B011532	B013456	MICROCKT,DGTL:65536 X 8 EPROM,PRGM	80009	160537005
A5U2160	160-5370-08	B013457	B015247	MICROCKT,DGTL:65536 X 8 EPROM,PRGM	80009	160537008
A5U2160	160-5370-09	B015248		MICROCKT,DGTL:65536 X 8 EPROM,PRGM (NOT PART OF A5 BOARD)	80009	160537009
A5U2201	156-0865-00			IC,DIGITAL:LSTTL,FLIP FLOP;OCTAL D-TYPE	01295	SN74LS273N
A5U2210	156-0391-00			IC,DIGITAL:LSTTL,FLIP FLOP;HEX D W/CLR	01295	SN74LS174N
A5U2220	156-0956-00			IC,DIGITAL:LSTTL,BUFFER/DRIVER;OCTAL	01295	SN74LS244N3
A5U2240	156-2396-00			IC,MISC:BIPOLAR,PWR SUPPLY SUPERVISOR	01295	TL7705 ACP
A5U2250	160-5061-00			IC,DIGITAL:CMOS,PLD;OTP,20G10,25NS,55MA	80009	160-5061-00
A5U2260	160-5371-04	B010100	B011531	MICROCKT,DGTL:65536 X 8 EPROM,PRGM	80009	160-5371-04
A5U2260	160-5371-05	B011532	B013456	MICROCKT,DGTL:65536 X 8 EPROM,PRGM	80009	160537105
A5U2260	160-5371-08	B013457	B015247	MICROCKT,DGTL:65536 X 8 EPROM,PRGM	80009	160537108
A5U2260	160-5371-09	B015248		MICROCKT,DGTL:65536 X 8 EPROM,PRGM (NOT PART OF A5 BOARD)	80009	160537109
A5U2301	156-0865-00			IC,DIGITAL:LSTTL,FLIP FLOP;OCTAL D-TYPE	01295	SN74LS273N
A5U2310	156-0865-00			IC,DIGITAL:LSTTL,FLIP FLOP;OCTAL D-TYPE	01295	SN74LS273N
A5U2350	156-0956-00			IC,DIGITAL:LSTTL,BUFFER/DRIVER;OCTAL	01295	SN74LS244N3
A5U2401	156-0513-03			IC,MISC:CMOS,ANALOG MUX;8 CHANNEL	04713	MC14051BCP
A5U2410	156-1486-00			IC,DIGITAL:CMOS,MUX/ENCODER;8-CHANNEL	04713	MC14512BCP
A5U2420	156-1200-01			IC,LINEAR:BIFET,OP-AMP	01295	TL074CN

Component Number	Tektronix Part No.	Serial No. Effective	Dscont	Name & Description	Mfr. Code	Mfr. Part No.
A5U2430	156-1200-01			IC,LINEAR:BIFET,OP-AMP	01295	TL074CN
A5U2440	156-0388-00			IC,DIGITAL:LSTTL,FLIP FLOP;DUAL D W/SET	01295	SN74LS74AN
A5U2450	156-1065-00			IC,DIGITAL:LSTTL,LATCH;OCTAL D TRANSPARENT	01295	SN74LS373N
A5U2460	156-2473-00			IC,MEMORY:CMOS,SRAM;8K X 8,200NS,10UA	0B0A9	DS2064
A5U2501	156-0513-03			IC,MISC:CMOS,ANALOG MUX;8 CHANNEL	04713	MC14051BCP
A5U2510	156-1126-01			IC,LINEAR:BIPOLAR,COMPARATOR	01295	LM311P
A5U2520	156-1191-01			IC,LINEAR:BIFET,OP-AMP;6MV VOS	01295	TL072ACP
A5U2521	156-0513-03			IC,MISC:CMOS,ANALOG MUX;8 CHANNEL	04713	MC14051BCP
A5U2530	156-0513-03			IC,MISC:CMOS,ANALOG MUX;8 CHANNEL	04713	MC14051BCP
A5U2540	156-1722-00			IC,DIGITAL:FTTL,GATE;HEX INV	04713	MC74F04N
A5U2550	156-0469-00			IC,DIGITAL:LSTTL,DEMUX/DECODER	01295	SN74LS138
A5U2601	156-0513-03			IC,MISC:CMOS,ANALOG MUX;8 CHANNEL	04713	MC14051BCP
A5U2620	156-1200-01			IC,LINEAR:BIFET,OP-AMP	01295	TL074CN
A5U2630	156-1200-01			IC,LINEAR:BIFET,OP-AMP	01295	TL074CN
A5U2640	156-0895-00			IC,DIGITAL:CMOS,COUNTER;14-BIT BINARY	04713	MC14020BCP
A5U2650	156-0804-00			IC,DIGITAL:LSTTL,LATCH;QUADRUPLE S-R	01295	SN74LS279AN
A5U2660	156-1026-00			IC,DIGITAL:LSTTL,DEMUX;4-TO16 DECODER	27014	DM74LS154N
A5VR2420	152-0278-00			DIODE,ZENER:,;3V,5%,0.4W	04713	1N4372ARL
A5W511	174-0002-00			CA ASSY,SP,ELEC:26,28 AWG,2.0 L	53387	174-0002-00
A5W512	174-0001-00			CA ASSY,SP,ELEC:34,28 AWG,2.0 L	53387	174-0001-00
A5W2070	131-0566-00			BUS,CONDUCTOR:DUMMY RES,0.094 OD X 0.225L	24546	OMA0207
A5W2540	131-1817-01			BUS,CONDUCTOR:22 AWG,2.0 TO 2.125 SP	TK1492	ORDER BY DESC
A5W2610	131-1817-01			BUS,CONDUCTOR:22 AWG,2.0 TO 2.125 SP	TK1492	ORDER BY DESC
A5W2701	131-0566-00			BUS,CONDUCTOR:DUMMY RES,0.094 OD X 0.225L	24546	OMA0207
A5Y2540	158-0248-01			XTAL UNIT,QTZ:10.000MHZ,0.01% SERIES	14301	011-669-02923

Component Number	Tektronix Part No.	Serial No. Effective	Dscont	Name & Description	Mfr. Code	Mfr. Part No.
A5	671-0965-00	B050000	B050846	CIRCUIT BD ASSY:CONTROL/READOUT/BUFFER	80009	671096500
A5	671-0965-01	B050847	B052244	CIRCUIT BD ASSY:CONTROL/READOUT/BUFFER	80009	671096501
A5	671-0965-02	B052245	B053646	CIRCUIT BD ASSY:CONTROL/READOUT/BUFFER	80009	671096502
A5	671-0965-04	B053647	B055937	CIRCUIT BD ASSY:CONTROL/READOUT/BUFFER	80009	671096504
A5	671-0965-05	B055938		CIRCUIT BD ASSY:CONTROL/READOUT/BUFFER	80009	671096505
A5C2010	290-5009-00			CAP,FXD,ELCTLT:15UF,25V	2N936	293D156X0025D2T
A5C2011	290-5009-00	B050000	B050846	CAP,FXD,ELCTLT:15UF,25V	2N936	293D156X0025D2T
A5C2011	290-5034-01	B050847		CAP,FXD,ELCTLT:33UF,10V	1W344	MVK10VC33RME60T
A5C2101	283-5098-00			CAP,FXD,CER DI:0.1UF,50WVDC	04222	12065E104ZAT3A
A5C2110	283-5188-00			CAP,FXD,CER DI:100PF,5%,100V	04222	12061A101JAT1A
A5C2111	283-5098-00			CAP,FXD,CER DI:0.1UF,50WVDC	04222	12065E104ZAT3A
A5C2113	290-0943-02	B050000	B050846	CAP,FXD,ELCTLT:47UF,20%,25V	1W344	SME25VB47RM5X11
A5C2113	290-5037-01	B050847		CAP,FXD,ELCTLT:10UF,35V	1W344	MVK35VC10RME60T
A5C2160	283-5098-00			CAP,FXD,CER DI:0.1UF,50WVDC	04222	12065E104ZAT3A
A5C2220	283-5098-00			CAP,FXD,CER DI:0.1UF,50WVDC	04222	12065E104ZAT3A
A5C2221	283-5098-00			CAP,FXD,CER DI:0.1UF,50WVDC	04222	12065E104ZAT3A
A5C2222	283-5098-00			CAP,FXD,CER DI:0.1UF,50WVDC	04222	12065E104ZAT3A
A5C2230	283-5098-00			CAP,FXD,CER DI:0.1UF,50WVDC	04222	12065E104ZAT3A
A5C2240	283-5098-00			CAP,FXD,CER DI:0.1UF,50WVDC	04222	12065E104ZAT3A
A5C2241	283-5098-00			CAP,FXD,CER DI:0.1UF,50WVDC	04222	12065E104ZAT3A
A5C2250	283-5098-00			CAP,FXD,CER DI:0.1UF,50WVDC	04222	12065E104ZAT3A
A5C2321	285-1301-01			CAP,FXD,MTLZD:0.47UF,10%,50	TK1913	MKS 2 .47/50 OR
A5C2322	283-5114-00			CAP,FXD,CER DI:0.1UF,10%,50V	04222	12065C104KAT1A
A5C2323	283-5114-00			CAP,FXD,CER DI:0.1UF,10%,50V	04222	12065C104KAT1A
A5C2324	283-5003-00			CAP,FXD,CER DI:0.01UF,10%,50V	04222	12065C103KAT1A
A5C2325	283-5003-00			CAP,FXD,CER DI:0.01UF,10%,50V	04222	12065C103KAT1A
A5C2330	285-1301-01			CAP,FXD,MTLZD:0.47UF,10%,50V	TK1913	MKS 2 .47/50
A5C2331	290-0943-02	B050000	B050846	CAP,FXD,ELCTLT:47UF,20%,25V	1W344	SME25VB47RM5X11
A5C2331	290-5037-01	B050847		CAP,FXD,ELCTLT:10UF,35V	1W344	MVK35VC10RME60T
A5C2332	283-5114-00			CAP,FXD,CER DI:0.1UF,10%,50V	04222	12065C104KAT1A
A5C2333	283-5114-00			CAP,FXD,CER DI:0.1UF,10%,50V	04222	12065C104KAT1A
A5C2350	290-5009-00			CAP,FXD,ELCTLT:15UF,25V	2N936	293D156X0025D2T
A5C2352	283-5098-00			CAP,FXD,CER DI:0.1UF,50WVDC	04222	12065E104ZAT3A
A5C2360	283-5098-00			CAP,FXD,CER DI:0.1UF,50WVDC	04222	12065E104ZAT3A
A5C2361	283-5098-00	B050847		CAP,FXD,CER DI:0.1UF,50WVDC	04222	12065E104ZAT3A
A5C2415	283-5098-00			CAP,FXD,CER DI:0.1UF,50WVDC	04222	12065E104ZAT3A
A5C2420	290-5009-00			CAP,FXD,ELCTLT:15UF,25V	2N936	293D156X0025D2T
A5C2421	283-5114-00			CAP,FXD,CER DI:0.1UF,10%,50V	04222	12065C104KAT1A
A5C2422	283-5197-00			CAP,FXD,CER DI:330PF,5%,100V	04222	12061A331JAT1A
A5C2425	283-5003-00			CAP,FXD,CER DI:0.01UF,10%,50V	04222	12065C103KAT1A

Component Number	Tektronix Part No.	Serial No. Effective	Dscont	Name & Description	Mfr. Code	Mfr. Part No.
A5C2430	285-1301-01			CAP,FXD,MTLZD:0.47UF,10%,50V	TK1913	MKS 2 .47/50 OR
A5C2431	283-5114-00			CAP,FXD,CER DI:0.1UF,10%,50V	04222	12065C104KAT1A
A5C2432	283-5114-00			CAP,FXD,CER DI:0.1UF,10%,50V	04222	12065C104KAT1A
A5C2433	283-5114-00			CAP,FXD,CER DI:0.1UF,10%,50V	04222	12065C104KAT1A
A5C2434	283-5114-00			CAP,FXD,CER DI:0.1UF,10%,50V	04222	12065C104KAT1A
A5C2440	283-5098-00			CAP,FXD,CER DI:0.1UF,50WVDC	04222	12065E104ZAT3A
A5C2441	283-5098-00	B050847		CAP,FXD,CER DI:0.1UF,50WVDC	04222	12065E104ZAT3A
A5C2450	283-5098-00			CAP,FXD,CER DI:0.1UF,50WVDC	04222	12065E104ZAT3A
A5C2451	283-5098-00			CAP,FXD,CER DI:0.1UF,50WVDC	04222	12065E104ZAT3A
A5C2452	283-5098-00			CAP,FXD,CER DI:0.1UF,50WVDC	04222	12065E104ZAT3A
A5C2460	283-5098-00			CAP,FXD,CER DI:0.1UF,50WVDC	04222	12065E104ZAT3A
A5C2465	283-5188-00			CAP,FXD,CER DI:100PF,5%,100V	04222	12061A101JAT1A
A5C2501	283-5098-00			CAP,FXD,CER DI:0.1UF,50WVDC	04222	12065E104ZAT3A
A5C2510	283-5098-00			CAP,FXD,CER DI:0.1UF,50WVDC	04222	12065E104ZAT3A
A5C2511	283-5197-00			CAP,FXD,CER DI:330PF,5%,100V	04222	12061A331JAT1A
A5C2520	283-5098-00			CAP,FXD,CER DI:0.1UF,50WVDC	04222	12065E104ZAT3A
A5C2521	283-5098-00			CAP,FXD,CER DI:0.1UF,50WVDC	04222	12065E104ZAT3A
A5C2530	283-5098-00			CAP,FXD,CER DI:0.1UF,50WVDC	04222	12065E104ZAT3A
A5C2532	283-5003-00	B050847		CAP,FXD,CER DI:0.01UF,10%,50V	04222	12065C103KAT1A
A5C2540	283-5098-00			CAP,FXD,CER DI:0.1UF,50WVDC	04222	12065E104ZAT3A
A5C2542	283-5114-00	B050000	B050253	CAP,FXD,CER DI:0.1UF,10%,50V	04222	12065C104KAT1A
A5C2542	283-5098-00	B050254		CAP,FXD,CER DI:0.1UF,50WVDC	04222	12065E104ZAT3A
A5C2550	283-5098-00			CAP,FXD,CER DI:0.1UF,50WVDC	04222	12065E104ZAT3A
A5C2610	283-5098-00			CAP,FXD,CER DI:0.1UF,50WVDC	04222	12065E104ZAT3A
A5C2611	283-5098-00	B050847		CAP,FXD,CER DI:0.1UF,50WVDC	04222	12065E104ZAT3A
A5C2621	283-5114-00			CAP,FXD,CER DI:0.1UF,10%,50V	04222	12065C104KAT1A
A5C2622	283-5114-00			CAP,FXD,CER DI:0.1UF,10%,50V	04222	12065C104KAT1A
A5C2623	283-5114-00			CAP,FXD,CER DI:0.1UF,10%,50V	04222	12065C104KAT1A
A5C2629	283-5098-00			CAP,FXD,CER DI:0.1UF,50WVDC	04222	12065E104ZAT3A
A5C2630	283-5114-00			CAP,FXD,CER DI:0.1UF,10%,50V	04222	12065C104KAT1A
A5C2631	283-5114-00			CAP,FXD,CER DI:0.1UF,10%,50V	04222	12065C104KAT1A
A5C2632	283-5114-00			CAP,FXD,CER DI:0.1UF,10%,50V	04222	12065C104KAT1A
A5C2633	283-5003-00			CAP,FXD,CER DI:0.01UF,10%,50V	04222	12065C103KAT1A
A5C2634	283-5003-00			CAP,FXD,CER DI:0.01UF,10%,50V	04222	12065C103KAT1A
A5C2640	283-5098-00			CAP,FXD,CER DI:0.1UF,50WVDC	04222	12065E104ZAT3A
A5C2641	283-5098-00			CAP,FXD,CER DI:0.1UF,50WVDC	04222	12065E104ZAT3A
A5C2650	283-5098-00			CAP,FXD,CER DI:0.1UF,50WVDC	04222	12065E104ZAT3A
A5C2720	285-1301-01			CAP,FXD,MTLZD:0.47UF,10%,50V	TK1913	MKS 2 .47/50 OR
A5C2721	283-5114-00			CAP,FXD,CER DI:0.1UF,10%,50V	04222	12065C104KAT1A
A5C2722	283-5114-00			CAP,FXD,CER DI:0.1UF,10%,50V	04222	12065C104KAT1A

Component Number	Tektronix Part No.	Serial No. Effective	Dscont	Name & Description	Mfr. Code	Mfr. Part No.
A5C2730	283-5114-00			CAP,FXD,CER DI:0.1UF,10%,50V	04222	12065C104KAT1A
A5C2731	285-1301-01			CAP,FXD,MTLZD:0.47UF,10%,50V	TK1913	MKS 2 .47/50
A5C2732	285-1301-01			CAP,FXD,MTLZD:0.47UF,10%,50V	TK1913	MKS 2 .47/50
A5C2733	285-1301-01			CAP,FXD,MTLZD:0.47UF,10%,50V	TK1913	MKS 2 .47/50
A5C2734	283-5114-00			CAP,FXD,CER DI:0.1UF,10%,50V	04222	12065C104KAT1A
A5C2800	283-5098-00	B050847		CAP,FXD,CER DI:0.1UF,50WVDC	04222	12065E104ZAT3A
A5C2801	283-5114-00	B050847		CAP,FXD,CER DI:0.1UF,10%,50V	04222	12065C104KAT1A
A5C2802	283-5114-00	B050847		CAP,FXD,CER DI:0.1UF,10%,50V	04222	12065C104KAT1A
A5C2820	283-5098-00			CAP,FXD,CER DI:0.1UF,50WVDC	04222	12065E104ZAT3A
A5C2821	283-5098-00			CAP,FXD,CER DI:0.1UF,50WVDC	04222	12065E104ZAT3A
A5C2830	283-5098-00			CAP,FXD,CER DI:0.1UF,50WVDC	04222	12065E104ZAT3A
A5C2831	283-5098-00			CAP,FXD,CER DI:0.1UF,50WVDC	04222	12065E104ZAT3A
A5C2835	283-5098-00			CAP,FXD,CER DI:0.1UF,50WVDC	04222	12065E104ZAT3A
A5C2836	283-5098-00			CAP,FXD,CER DI:0.1UF,50WVDC	04222	12065E104ZAT3A
A5C2850	283-5098-00			CAP,FXD,CER DI:0.1UF,50WVDC	04222	12065E104ZAT3A
A5C2851	283-5098-00			CAP,FXD,CER DI:0.1UF,50WVDC	04222	12065E104ZAT3A
A5C2855	283-5098-00			CAP,FXD,CER DI:0.1UF,50WVDC	04222	12065E104ZAT3A
A5C2860	283-5098-00	B050000	B050846	CAP,FXD,CER DI:0.1UF,50WVDC	04222	12065E104ZAT3A
A5C2861	283-5098-00			CAP,FXD,CER DI:0.1UF,50WVDC	04222	12065E104ZAT3A
A5C2870	283-5098-00	B050000	B050846	CAP,FXD,CER DI:0.1UF,50WVDC	04222	12065E104ZAT3A
A5C2875	283-5098-00			CAP,FXD,CER DI:0.1UF,50WVDC	04222	12065E104ZAT3A
A5C2885	283-5098-00			CAP,FXD,CER DI:0.1UF,50WVDC	04222	12065E104ZAT3A
A5C2890	283-5098-00			CAP,FXD,CER DI:0.1UF,50WVDC	04222	12065E104ZAT3A
A5C2901	283-5098-00			CAP,FXD,CER DI:0.1UF,50WVDC	04222	12065E104ZAT3A
A5C2905	283-5098-00			CAP,FXD,CER DI:0.1UF,50WVDC	04222	12065E104ZAT3A
A5C2911	283-5003-00			CAP,FXD,CER DI:0.01UF,10%,50V	04222	12065C103KAT1A
A5C2913	283-5098-00			CAP,FXD,CER DI:0.1UF,50WVDC	04222	12065E104ZAT3A
A5C2926	283-5098-00			CAP,FXD,CER DI:0.1UF,50WVDC	04222	12065E104ZAT3A
A5C2940	283-5098-00			CAP,FXD,CER DI:0.1UF,50WVDC	04222	12065E104ZAT3A
A5C2950	283-5098-00			CAP,FXD,CER DI:0.1UF,50WVDC	04222	12065E104ZAT3A
A5C2960	283-5098-00			CAP,FXD,CER DI:0.1UF,50WVDC	04222	12065E104ZAT3A
A5C2965	290-5009-00	B050000	B050846	CAP,FXD,ELCTLT:15UF,25V	2N936	293D156X0025D2T
A5C2965	290-5034-01	B050847		CAP,FXD,ELCTLT:33UF,10V	1W344	MVK10VC33RME60T
A5C2970	283-5098-00			CAP,FXD,CER DI:0.1UF,50WVDC	04222	12065E104ZAT3A
A5C2980	283-5098-00			CAP,FXD,CER DI:0.1UF,50WVDC	04222	12065E104ZAT3A
A5C2981	283-5098-00			CAP,FXD,CER DI:0.1UF,50WVDC	04222	12065E104ZAT3A
A5C2990	283-5098-00			CAP,FXD,CER DI:0.1UF,50WVDC	04222	12065E104ZAT3A
A5C2995	283-5098-00			CAP,FXD,CER DI:0.1UF,50WVDC	04222	12065E104ZAT3A
A5CR2230	152-5004-00	B050000	B051265	DIODE,SIG:,ULTRA FAST;70V,0.15A,6NS	25088	BAV99-E6327
A5CR2230	152-5018-00	B051266		DIODE,SIG:,ULTRA FAST;100V,0.74VF,4NS	27014	MMBD1203-HIGH

Component Number	Tektronix Part No.	Serial No. Effective	Dscont	Name & Description	Mfr. Code	Mfr. Part No.
A5CR2332	152-5004-00	B050000	B051265	DIODE,SIG:,ULTRA FAST;70V,0.15A,6NS	25088	BAV99-E6327
A5CR2332	152-5018-00	B051266		DIODE,SIG:,ULTRA FAST;100V,0.74VF,4NS	27014	MMBD1203-HIGH
A5CR2420	152-5004-00	B050000	B051265	DIODE,SIG:,ULTRA FAST;70V,0.15A,6NS	25088	BAV99-E6327
A5CR2420	152-5018-00	B051266		DIODE,SIG:,ULTRA FAST;100V,0.74VF,4NS	27014	MMBD1203-HIGH
A5CR2421	152-5004-00	B050000	B051265	DIODE,SIG:,ULTRA FAST;70V,0.15A,6NS	25088	BAV99-E6327
A5CR2421	152-5018-00	B051266		DIODE,SIG:,ULTRA FAST;100V,0.74VF,4NS	27014	MMBD1203-HIGH
A5CR2422	152-5004-00	B050000	B051265	DIODE,SIG:,ULTRA FAST;70V,0.15A,6NS	25088	BAV99-E6327
A5CR2422	152-5018-00	B051266		DIODE,SIG:,ULTRA FAST;100V,0.74VF,4NS	27014	MMBD1203-HIGH
A5CR2423	152-5004-00	B050000	B051265	DIODE,SIG:,ULTRA FAST;70V,0.15A,6NS	25088	BAV99-E6327
A5CR2423	152-5018-00	B051266		DIODE,SIG:,ULTRA FAST;100V,0.74VF,4NS	27014	MMBD1203-HIGH
A5CR2610	152-5005-00	B050000	B051265	DIODE,SIG:,ULTRA FAST;70V,0.15A,6NS	04713	BAW56LT1
A5CR2610	152-5062-00	B051266		DIODE,SIG:,ULTRA FAST;100V,0.74VF,4NS	27014	MMBD1205
A5CR2620	152-5005-00	B050000	B051265	DIODE,SIG:,ULTRA FAST;70V,0.15A,6NS	04713	BAW56LT1
A5CR2620	152-5062-00	B051266		DIODE,SIG:,ULTRA FAST;100V,0.74VF,4NS	27014	MMBD1205
A5CR2621	152-5005-00	B050000	B051265	DIODE,SIG:,ULTRA FAST;70V,0.15A,6NS	04713	BAW56LT1
A5CR2621	152-5062-00	B051266		DIODE,SIG:,ULTRA FAST;100V,0.74VF,4NS	27014	MMBD1205
A5CR2640	152-5005-00	B050000	B051265	DIODE,SIG:,ULTRA FAST;70V,0.15A,6NS	04713	BAW56LT1
A5CR2640	152-5062-00	B051266		DIODE,SIG:,ULTRA FAST;100V,0.74VF,4NS	27014	MMBD1205
A5J251	131-3360-00			CONN,HDR:PCB,;MALE,STR,2 X 10,0.1 CTR	53387	2520-6002UB
A5J411	131-3362-00			CONN,HDR:PCB,;MALE,STR,2 X 13,0.1 CTR	53387	2526-6002UB
A5J501	131-4671-00			CONN,HDR:PCB,;MALE,STR,1 X 3,0.1 CTR	53387	2403-6112TB
A5J503	131-4671-00			CONN,HDR:PCB,;MALE,STR,1 X 3,0.1 CTR	53387	2403-6112TB
A5J504	131-4671-00			CONN,HDR:PCB,;MALE,STR,1 X 3,0.1 CTR	53387	2403-6112TB
A5J511	131-3362-00			CONN,HDR:PCB,;MALE,STR,2 X 13,0.1 CTR	53387	2526-6002UB
A5J512	131-3364-00			CONN,HDR:PCB,;MALE,STR,2 X 17,0.1 CTR	53387	2534-6002UB
A5J651	131-3360-00			CONN,HDR:PCB,;MALE,STR,2 X 10,0.1 CTR	53387	2520-6002UB
A5J652	131-3360-00			CONN,HDR:PCB,;MALE,STR,2 X 10,0.1 CTR	53387	2520-6002UB
A5J4241	131-3323-00			CONN,HDR:PCB,;MALE,STR,2 X 20,0.1 CTR	22526	66506-025
A5J4330	131-3152-00			CONN,HDR:PCB,;MALE,STR,2 X 8,0.1 CTR	53387	2516-6002UB
A5P501	131-0993-00			CONN,BOX:SHUNT/SHORTING,;FEMALE,STR	22526	65474-006
A5P503	131-0993-00			CONN,BOX:SHUNT/SHORTING,;FEMALE,STR	22526	65474-006
A5P504	131-0993-00			CONN,BOX:SHUNT/SHORTING,;FEMALE,STR	22526	65474-006
A5Q2320	151-5001-00			TRANSISTOR,SIG:BIPOLAR,NPN;40V,200MA	04713	MMBT3904T1/T2
A5Q2805	151-5001-00			TRANSISTOR,SIG:BIPOLAR,NPN;40V,200MA	04713	MMBT3904T1/T2
A5R2001	321-5006-00			RES,FXD:METAL FILM;100 OHM,1%,0.125W,TC=100	91637	CRCW12061000FT
A5R2002	321-5006-00			RES,FXD:METAL FILM;100 OHM,1%,0.125W,TC=100	91637	CRCW12061000FT
A5R2004	321-5006-00			RES,FXD:METAL FILM;100 OHM,1%,0.125W,TC=100	91637	CRCW12061000FT
A5R2005	321-5006-00			RES,FXD:METAL FILM;100 OHM,1%,0.125W,TC=100	91637	CRCW12061000FT
A5R2006	321-5006-00			RES,FXD:METAL FILM;100 OHM,1%,0.125W,TC=100	91637	CRCW12061000FT
A5R2007	321-5006-00			RES,FXD:METAL FILM;100 OHM,1%,0.125W,TC=100	91637	CRCW12061000FT

Component Number	Tektronix Part No.	Serial No. Effective	Dscont	Name & Description	Mfr. Code	Mfr. Part No.
A5R2010	311-5038-00			RES,VAR,TRMR:CERMET;20K OHM,25%,0.25W	TK2073	G4DT203E
A5R2011	321-5026-00			RES,FXD:METAL FILM;4.75K OHM,1%,0.125W	91637	CRCW12064751FT
A5R2012	321-5165-00			RES,FXD,FILM:10K OHM,0.1%,0.125W,TC=T9	91637	TNPW1206-1002BT
A5R2013	321-5165-00			RES,FXD,FILM:10K OHM,0.1%,0.125W,TC=T9	91637	TNPW1206-1002BT
A5R2014	321-5167-00			RES,FXD:METAL FILM;221K OHM,1%,0.125W	91637	CRCW1206-22102F
A5R2015	321-5041-00			RES,FXD:METAL FILM;82.5K OHM,1%,0.125W	91637	CRCW12068252FT
A5R2016	321-5018-00			RES,FXD:METAL FILM;1.0K OHM,1%,0.125W	91637	CRCW12061001FT
A5R2101	321-5006-00			RES,FXD:METAL FILM;100 OHM,1%,0.125W,TC=100	91637	CRCW12061000FT
A5R2102	321-5006-00			RES,FXD:METAL FILM;100 OHM,1%,0.125W,TC=100	91637	CRCW12061000FT
A5R2103	321-5006-00			RES,FXD:METAL FILM;100 OHM,1%,0.125W,TC=100	91637	CRCW12061000FT
A5R2104	321-5006-00			RES,FXD:METAL FILM;100 OHM,1%,0.125W,TC=100	91637	CRCW12061000FT
A5R2201	321-5030-00			RES,FXD:METAL FILM;10.0K OHM,1%,0.125W	91637	CRCW12061002FT
A5R2202	321-5030-00			RES,FXD:METAL FILM;10.0K OHM,1%,0.125W	91637	CRCW12061002FT
A5R2203	321-5030-00			RES,FXD:METAL FILM;10.0K OHM,1%,0.125W	91637	CRCW12061002FT
A5R2204	321-5030-00			RES,FXD:METAL FILM;10.0K OHM,1%,0.125W	91637	CRCW12061002FT
A5R2205	321-5030-00			RES,FXD:METAL FILM;10.0K OHM,1%,0.125W	91637	CRCW12061002FT
A5R2210	321-5030-00	B050000	B050846	RES,FXD:METAL FILM;10.0K OHM,1%,0.125W	91637	CRCW12061002FT
A5R2211	321-5030-00	B050000	B050846	RES,FXD:METAL FILM;10.0K OHM,1%,0.125W	91637	CRCW12061002FT
A5R2212	321-5030-00	B050000	B050846	RES,FXD:METAL FILM;10.0K OHM,1%,0.125W	91637	CRCW12061002FT
A5R2213	321-5030-00	B050000	B050846	RES,FXD:METAL FILM;10.0K OHM,1%,0.125W	91637	CRCW12061002FT
A5R2214	321-5030-00	B050000	B050846	RES,FXD:METAL FILM;10.0K OHM,1%,0.125W	91637	CRCW12061002FT
A5R2215	321-5030-00	B050000	B050846	RES,FXD:METAL FILM;10.0K OHM,1%,0.125W	91637	CRCW12061002FT
A5R2220	321-5018-00			RES,FXD:METAL FILM;1.0K OHM,1%,0.125W	91637	CRCW12061001FT
A5R2230	321-5165-00			RES,FXD,FILM:10K OHM,0.1%,0.125W,TC=T9	91637	TNPW1206-1002BT
A5R2231	321-5022-00			RES,FXD:METAL FILM;2.21K OHM,1%,0.125W	91637	CRCW12062211FT
A5R2232	321-5022-00			RES,FXD:METAL FILM;2.21K OHM,1%,0.125W	91637	CRCW12062211FT
A5R2241	321-5047-00			RES,FXD:METAL FILM;100K OHM,1%,0.125W	91637	CRCW12061003FT
A5R2242	321-5047-00			RES,FXD:METAL FILM;100K OHM,1%,0.125W	91637	CRCW12061003FT
A5R2244	321-5030-00	B050000	B055937	RES,FXD:METAL FILM;10.0K OHM,1%,0.125W	91637	CRCW12061002FT
A5R2244	321-5018-00	B055938		RES,FXD:METAL FILM;1.0K OHM,1%,0.125W	91637	CRCW12061001FT
A5R2251	321-5018-00			RES,FXD:METAL FILM;1.0K OHM,1%,0.125W	91637	CRCW12061001FT
A5R2301	321-5030-00			RES,FXD:METAL FILM;10.0K OHM,1%,0.125W	91637	CRCW12061002FT
A5R2302	321-5030-00			RES,FXD:METAL FILM;10.0K OHM,1%,0.125W	91637	CRCW12061002FT
A5R2303	321-5030-00			RES,FXD:METAL FILM;10.0K OHM,1%,0.125W	91637	CRCW12061002FT
A5R2304	321-5030-00			RES,FXD:METAL FILM;10.0K OHM,1%,0.125W	91637	CRCW12061002FT
A5R2305	321-5030-00			RES,FXD:METAL FILM;10.0K OHM,1%,0.125W	91637	CRCW12061002FT
A5R2320	321-5034-00			RES,FXD:METAL FILM;22.1K OHM,1%,0.125W	91637	CRCW12062212FT
A5R2321	321-5030-00			RES,FXD:METAL FILM;10.0K OHM,1%,0.125W	91637	CRCW12061002FT
A5R2322	321-5030-00			RES,FXD:METAL FILM;10.0K OHM,1%,0.125W	91637	CRCW12061002FT
A5R2323	321-5032-00			RES,FXD:METAL FILM;15.0K OHM,1%,0.125W	91637	CRCW12061502FT

Component Number	Tektronix Part No.	Serial No. Effective	Dscont	Name & Description	Mfr. Code	Mfr. Part No.
A5R2329	321-5036-00			RES,FXD:METAL FILM;33.2K OHM,1%,0.125W	91637	CRCW12063322FT
A5R2330	321-5027-00			RES,FXD:METAL FILM;5.62K OHM,1%,0.125W	91637	CRCW12065621FT
A5R2331	321-5023-00			RES,FXD:METAL FILM;2.74K OHM,1%,0.125W	91637	CRCW12062741FT
A5R2332	321-5018-00			RES,FXD:METAL FILM;1.0K OHM,1%,0.125W	91637	CRCW12061001FT
A5R2333	321-5023-00			RES,FXD:METAL FILM;2.74K OHM,1%,0.125W	91637	CRCW12062741FT
A5R2334	321-5018-00			RES,FXD:METAL FILM;1.0K OHM,1%,0.125W	91637	CRCW12061001FT
A5R2340	321-5030-00			RES,FXD:METAL FILM;10.0K OHM,1%,0.125W	91637	CRCW12061002FT
A5R2341	321-5030-00			RES,FXD:METAL FILM;10.0K OHM,1%,0.125W	91637	CRCW12061002FT
A5R2342	321-5030-00			RES,FXD:METAL FILM;10.0K OHM,1%,0.125W	91637	CRCW12061002FT
A5R2343	321-5047-00			RES,FXD:METAL FILM;100K OHM,1%,0.125W	91637	CRCW12061003FT
A5R2344	321-5047-00			RES,FXD:METAL FILM;100K OHM,1%,0.125W	91637	CRCW12061003FT
A5R2345	321-5018-00			RES,FXD:METAL FILM;1.0K OHM,1%,0.125W	91637	CRCW12061001FT
A5R2346	321-5022-00			RES,FXD:METAL FILM;2.21K OHM,1%,0.125W	91637	CRCW12062211FT
A5R2401	321-5030-00			RES,FXD:METAL FILM;10.0K OHM,1%,0.125W	91637	CRCW12061002FT
A5R2402	321-5030-00			RES,FXD:METAL FILM;10.0K OHM,1%,0.125W	91637	CRCW12061002FT
A5R2403	321-5030-00			RES,FXD:METAL FILM;10.0K OHM,1%,0.125W	91637	CRCW12061002FT
A5R2404	321-5030-00			RES,FXD:METAL FILM;10.0K OHM,1%,0.125W	91637	CRCW12061002FT
A5R2405	321-5047-00			RES,FXD:METAL FILM;100K OHM,1%,0.125W	91637	CRCW12061003FT
A5R2406	321-5047-00			RES,FXD:METAL FILM;100K OHM,1%,0.125W	91637	CRCW12061003FT
A5R2407	321-5030-00			RES,FXD:METAL FILM;10.0K OHM,1%,0.125W	91637	CRCW12061002FT
A5R2408	321-5030-00			RES,FXD:METAL FILM;10.0K OHM,1%,0.125W	91637	CRCW12061002FT
A5R2409	321-5030-00			RES,FXD:METAL FILM;10.0K OHM,1%,0.125W	91637	CRCW12061002FT
A5R2410	321-5047-00			RES,FXD:METAL FILM;100K OHM,1%,0.125W	91637	CRCW12061003FT
A5R2411	321-5030-00			RES,FXD:METAL FILM;10.0K OHM,1%,0.125W	91637	CRCW12061002FT
A5R2412	321-5047-00			RES,FXD:METAL FILM;100K OHM,1%,0.125W	91637	CRCW12061003FT
A5R2413	321-5030-00			RES,FXD:METAL FILM;10.0K OHM,1%,0.125W	91637	CRCW12061002FT
A5R2414	321-5030-00			RES,FXD:METAL FILM;10.0K OHM,1%,0.125W	91637	CRCW12061002FT
A5R2415	321-5018-00			RES,FXD:METAL FILM;1.0K OHM,1%,0.125W	91637	CRCW12061001FT
A5R2416	321-5030-00			RES,FXD:METAL FILM;10.0K OHM,1%,0.125W	91637	CRCW12061002FT
A5R2417	321-5030-00			RES,FXD:METAL FILM;10.0K OHM,1%,0.125W	91637	CRCW12061002FT
A5R2420	321-5030-00			RES,FXD:METAL FILM;10.0K OHM,1%,0.125W	91637	CRCW12061002FT
A5R2421	321-5165-00			RES,FXD,FILM:10K OHM,0.1%,0.125W,TC=T9	91637	TNPW1206-1002BT
A5R2422	321-5165-00			RES,FXD,FILM:10K OHM,0.1%,0.125W,TC=T9	91637	TNPW1206-1002BT
A5R2423	321-5018-00			RES,FXD:METAL FILM;1.0K OHM,1%,0.125W	91637	CRCW12061001FT
A5R2424	321-5031-00			RES,FXD:METAL FILM;12.1K OHM,1%,0.125W	91637	CRCW12061212FT
A5R2430	321-5165-00			RES,FXD,FILM:10K OHM,0.1%,0.125W,TC=T9	91637	TNPW1206-1002BT
A5R2431	321-5006-00			RES,FXD:METAL FILM;100 OHM,1%,0.125W,TC=100	91637	CRCW12061000FT
A5R2432	321-5036-00			RES,FXD:METAL FILM;33.2K OHM,1%,0.125W	91637	CRCW12063322FT
A5R2433	321-5030-00			RES,FXD:METAL FILM;10.0K OHM,1%,0.125W	91637	CRCW12061002FT
A5R2434	321-5030-00			RES,FXD:METAL FILM;10.0K OHM,1%,0.125W	91637	CRCW12061002FT

Component Number	Tektronix Part No.	Serial No. Effective	Dscont	Name & Description	Mfr. Code	Mfr. Part No.
A5R2435	321-5041-00			RES,FXD:METAL FILM;82.5K OHM,1%,0.125W	91637	CRCW12068252FT
A5R2440	321-5047-00			RES,FXD:METAL FILM;100K OHM,1%,0.125W	91637	CRCW12061003FT
A5R2441	321-5047-00			RES,FXD:METAL FILM;100K OHM,1%,0.125W	91637	CRCW12061003FT
A5R2442	321-5047-00			RES,FXD:METAL FILM;100K OHM,1%,0.125W	91637	CRCW12061003FT
A5R2443	321-5030-00			RES,FXD:METAL FILM;10.0K OHM,1%,0.125W	91637	CRCW12061002FT
A5R2444	321-5018-00			RES,FXD:METAL FILM;1.0K OHM,1%,0.125W	91637	CRCW12061001FT
A5R2461	321-5018-00	B050000	B050846	RES,FXD:METAL FILM;1.0K OHM,1%,0.125W	91637	CRCW12061001FT
A5R2465	321-5016-00			RES,FXD:METAL FILM;681 OHM,1%,0.125W,TC=100	91637	CRCW12066810FT
A5R2501	321-5030-00			RES,FXD:METAL FILM;10.0K OHM,1%,0.125W	91637	CRCW12061002FT
A5R2502	321-5030-00			RES,FXD:METAL FILM;10.0K OHM,1%,0.125W	91637	CRCW12061002FT
A5R2503	321-5030-00			RES,FXD:METAL FILM;10.0K OHM,1%,0.125W	91637	CRCW12061002FT
A5R2504	321-5030-00			RES,FXD:METAL FILM;10.0K OHM,1%,0.125W	91637	CRCW12061002FT
A5R2505	321-5030-00			RES,FXD:METAL FILM;10.0K OHM,1%,0.125W	91637	CRCW12061002FT
A5R2511	321-5018-00			RES,FXD:METAL FILM;1.0K OHM,1%,0.125W	91637	CRCW12061001FT
A5R2512	321-5018-00			RES,FXD:METAL FILM;1.0K OHM,1%,0.125W	91637	CRCW12061001FT
A5R2513	321-5030-00			RES,FXD:METAL FILM;10.0K OHM,1%,0.125W	91637	CRCW12061002FT
A5R2520	321-5164-00			RES,FXD,FILM:681 OHM,0.1%,0.125W,TC=T9	91637	TNPW12066810BT
A5R2521	321-5164-00			RES,FXD,FILM:681 OHM,0.1%,0.125W,TC=T9	91637	TNPW12066810BT
A5R2522	321-5030-00	B050000	B050846	RES,FXD:METAL FILM;10.0K OHM,1%,0.125W	91637	CRCW12061002FT
A5R2522	321-5020-00	B050847		RES,FXD:METAL FILM;1.5K OHM,1%,0.125W	91637	CRCW12061501FT
A5R2523	321-5040-00	B050000	B050846	RES,FXD:METAL FILM;68.1K OHM,1%,0.125W	91637	CRCW12066812FT
A5R2523	321-5030-00	B050847		RES,FXD:METAL FILM;10.0K OHM,1%,0.125W	91637	CRCW12061002FT
A5R2524	321-5040-00			RES,FXD:METAL FILM;68.1K OHM,1%,0.125W	91637	CRCW12066812FT
A5R2531	321-5006-00			RES,FXD:METAL FILM;100 OHM,1%,0.125W,TC=100	91637	CRCW12061000FT
A5R2532	321-5040-00	B050000	B050846	RES,FXD:METAL FILM;68.1K OHM,1%,0.125W	91637	CRCW12066812FT
A5R2532	321-5030-00	B050847		RES,FXD:METAL FILM;10.0K OHM,1%,0.125W	91637	CRCW12061002FT
A5R2533	321-5023-00			RES,FXD:METAL FILM;2.74K OHM,1%,0.125W	91637	CRCW12062741FT
A5R2534	321-5023-00			RES,FXD:METAL FILM;2.74K OHM,1%,0.125W	91637	CRCW12062741FT
A5R2535	321-5023-00			RES,FXD:METAL FILM;2.74K OHM,1%,0.125W	91637	CRCW12062741FT
A5R2536	321-5030-00			RES,FXD:METAL FILM;10.0K OHM,1%,0.125W	91637	CRCW12061002FT
A5R2537	321-5022-00			RES,FXD:METAL FILM;2.21K OHM,1%,0.125W	91637	CRCW12062211FT
A5R2540	321-5030-00			RES,FXD:METAL FILM;10.0K OHM,1%,0.125W	91637	CRCW12061002FT
A5R2560	321-5022-00			RES,FXD:METAL FILM;2.21K OHM,1%,0.125W	91637	CRCW12062211FT
A5R2601	321-5012-00			RES,FXD:METAL FILM;332 OHM,1%,0.125W,TC=100	91637	CRCW12063320FT
A5R2602	321-5030-00			RES,FXD:METAL FILM;10.0K OHM,1%,0.125W	91637	CRCW12061002FT
A5R2603	321-5030-00			RES,FXD:METAL FILM;10.0K OHM,1%,0.125W	91637	CRCW12061002FT
A5R2611	321-5047-00			RES,FXD:METAL FILM;100K OHM,1%,0.125W	91637	CRCW12061003FT
A5R2612	321-5026-00			RES,FXD:METAL FILM;4.75K OHM,1%,0.125W	91637	CRCW12064751FT
A5R2613	321-5030-00			RES,FXD:METAL FILM;10.0K OHM,1%,0.125W	91637	CRCW12061002FT
A5R2620	321-5030-00			RES,FXD:METAL FILM;10.0K OHM,1%,0.125W	91637	CRCW12061002FT

Component Number	Tektronix Part No.	Serial No. Effective	Dscont	Name & Description	Mfr. Code	Mfr. Part No.
A5R2621	321-5022-00			RES,FXD:METAL FILM;2.21K OHM,1%,0.125W	91637	CRCW12062211FT
A5R2622	321-5006-00			RES,FXD:METAL FILM;100 OHM,1%,0.125W,TC=100	91637	CRCW12061000FT
A5R2623	321-5022-00			RES,FXD:METAL FILM;2.21K OHM,1%,0.125W	91637	CRCW12062211FT
A5R2624	321-5026-00			RES,FXD:METAL FILM;4.75K OHM,1%,0.125W	91637	CRCW12064751FT
A5R2625	321-5030-00			RES,FXD:METAL FILM;10.0K OHM,1%,0.125W	91637	CRCW12061002FT
A5R2626	321-5030-00			RES,FXD:METAL FILM;10.0K OHM,1%,0.125W	91637	CRCW12061002FT
A5R2630	321-5018-00			RES,FXD:METAL FILM;1.0K OHM,1%,0.125W	91637	CRCW12061001FT
A5R2631	321-5023-00			RES,FXD:METAL FILM;2.74K OHM,1%,0.125W	91637	CRCW12062741FT
A5R2632	321-5018-00			RES,FXD:METAL FILM;1.0K OHM,1%,0.125W	91637	CRCW12061001FT
A5R2640	321-5030-00	B050000	B050846	RES,FXD:METAL FILM;10.0K OHM,1%,0.125W	91637	CRCW12061002FT
A5R2640	321-5020-00	B050847		RES,FXD:METAL FILM;1.5K OHM,1%,0.125W	91637	CRCW12061501FT
A5R2643	321-5030-00			RES,FXD:METAL FILM;10.0K OHM,1%,0.125W	91637	CRCW12061002FT
A5R2644	321-5030-00			RES,FXD:METAL FILM;10.0K OHM,1%,0.125W	91637	CRCW12061002FT
A5R2645	321-5030-00			RES,FXD:METAL FILM;10.0K OHM,1%,0.125W	91637	CRCW12061002FT
A5R2646	321-5030-00	B050000	B050846	RES,FXD:METAL FILM;10.0K OHM,1%,0.125W	91637	CRCW12061002FT
A5R2647	321-5030-00	B050000	B050846	RES,FXD:METAL FILM;10.0K OHM,1%,0.125W	91637	CRCW12061002FT
A5R2648	321-5030-00	B050000	B050846	RES,FXD:METAL FILM;10.0K OHM,1%,0.125W	91637	CRCW12061002FT
A5R2649	321-5012-00			RES,FXD:METAL FILM;332 OHM,1%,0.125W,TC=100	91637	CRCW12063320FT
A5R2701	321-5030-00			RES,FXD:METAL FILM;10.0K OHM,1%,0.125W	91637	CRCW12061002FT
A5R2702	321-5030-00			RES,FXD:METAL FILM;10.0K OHM,1%,0.125W	91637	CRCW12061002FT
A5R2703	321-5030-00			RES,FXD:METAL FILM;10.0K OHM,1%,0.125W	91637	CRCW12061002FT
A5R2704	321-5030-00			RES,FXD:METAL FILM;10.0K OHM,1%,0.125W	91637	CRCW12061002FT
A5R2705	321-5030-00			RES,FXD:METAL FILM;10.0K OHM,1%,0.125W	91637	CRCW12061002FT
A5R2706	321-5030-00			RES,FXD:METAL FILM;10.0K OHM,1%,0.125W	91637	CRCW12061002FT
A5R2707	321-5030-00			RES,FXD:METAL FILM;10.0K OHM,1%,0.125W	91637	CRCW12061002FT
A5R2708	321-5030-00			RES,FXD:METAL FILM;10.0K OHM,1%,0.125W	91637	CRCW12061002FT
A5R2709	321-5030-00			RES,FXD:METAL FILM;10.0K OHM,1%,0.125W	91637	CRCW12061002FT
A5R2710	321-5030-00			RES,FXD:METAL FILM;10.0K OHM,1%,0.125W	91637	CRCW12061002FT
A5R2711	321-5030-00			RES,FXD:METAL FILM;10.0K OHM,1%,0.125W	91637	CRCW12061002FT
A5R2712	321-5030-00			RES,FXD:METAL FILM;10.0K OHM,1%,0.125W	91637	CRCW12061002FT
A5R2714	321-5014-00	B050847		RES,FXD:METAL FILM;475 OHM,1%,0.125W,TC=100	91637	CRCW12064750FT
A5R2720	321-5030-00			RES,FXD:METAL FILM;10.0K OHM,1%,0.125W	91637	CRCW12061002FT
A5R2721	321-5034-00			RES,FXD:METAL FILM;22.1K OHM,1%,0.125W	91637	CRCW12062212FT
A5R2730	321-5034-00			RES,FXD:METAL FILM;22.1K OHM,1%,0.125W	91637	CRCW12062212FT
A5R2731	321-5199-00			RES,FXD,FILM:100M OHM,10%,0.0625 W	56637	HR1206
A5R2732	321-5199-00			RES,FXD,FILM:100M OHM,10%,0.0625 W	56637	HR1206
A5R2733	321-5023-00			RES,FXD:METAL FILM;2.74K OHM,1%,0.125W	91637	CRCW12062741FT
A5R2734	321-5022-00			RES,FXD:METAL FILM;2.21K OHM,1%,0.125W	91637	CRCW12062211FT
A5R2735	321-5022-00			RES,FXD:METAL FILM;2.21K OHM,1%,0.125W	91637	CRCW12062211FT
A5R2740	321-5018-00			RES,FXD:METAL FILM;1.0K OHM,1%,0.125W	91637	CRCW12061001FT

Component Number	Tektronix Part No.	Serial No. Effective	Dscont	Name & Description	Mfr. Code	Mfr. Part No.
A5R2741	321-5006-00	B050000	B050846	RES,FXD:METAL FILM;100 OHM,1%,0.125W,TC=100	91637	CRCW12061000FT
A5R2741	321-5014-00	B050847		RES,FXD:METAL FILM;475 OHM,1%,0.125W,TC=100	91637	CRCW12064750FT
A5R2742	321-5014-00	B050847		RES,FXD:METAL FILM;475 OHM,1%,0.125W,TC=100	91637	CRCW12064750FT
A5R2830	321-5012-00	B050000	B050846	RES,FXD:METAL FILM;332 OHM,1%,0.125W,TC=100	91637	CRCW12063320FT
A5R2865	321-5030-00	B050000	B050846	RES,FXD:METAL FILM;10.0K OHM,1%,0.125W	91637	CRCW12061002FT
A5R2866	321-5030-00			RES,FXD:METAL FILM;10.0K OHM,1%,0.125W	91637	CRCW12061002FT
A5R2885	321-5012-00			RES,FXD:METAL FILM;332 OHM,1%,0.125W,TC=100	91637	CRCW12063320FT
A5R2890	321-5012-00			RES,FXD:METAL FILM;332 OHM,1%,0.125W,TC=100	91637	CRCW12063320FT
A5R2902	321-5018-00			RES,FXD:METAL FILM;1.0K OHM,1%,0.125W	91637	CRCW12061001FT
A5R2903	321-5165-00			RES,FXD,FILM:10K OHM,0.1%,0.125W,TC=T9	91637	TNPW1206-1002BT
A5R2904	321-5012-00			RES,FXD:METAL FILM;332 OHM,1%,0.125W,TC=100	91637	CRCW12063320FT
A5R2905	321-5028-00			RES,FXD:METAL FILM;6.81K OHM,1%,0.125W	91637	CRCW12066811FT
A5R2906	321-5165-00			RES,FXD,FILM:10K OHM,0.1%,0.125W,TC=T9	91637	TNPW1206-1002BT
A5R2907	321-5033-00			RES,FXD:METAL FILM;18.2K OHM,1%,0.125W	91637	CRCW12061822FT
A5R2908	321-5032-00			RES,FXD:METAL FILM;15.0K OHM,1%,0.125W	91637	CRCW12061502FT
A5R2909	321-5032-00			RES,FXD:METAL FILM;15.0K OHM,1%,0.125W	91637	CRCW12061502FT
A5R2910	321-5032-00			RES,FXD:METAL FILM;15.0K OHM,1%,0.125W	91637	CRCW12061502FT
A5R2911	321-5032-00			RES,FXD:METAL FILM;15.0K OHM,1%,0.125W	91637	CRCW12061502FT
A5R2912	321-5018-00			RES,FXD:METAL FILM;1.0K OHM,1%,0.125W	91637	CRCW12061001FT
A5R2913	321-5015-00			RES,FXD:METAL FILM;562 OHM,1%,0.125W,TC=100	91637	CRCW12065620FT
A5R2914	321-5032-00			RES,FXD:METAL FILM;15.0K OHM,1%,0.125W	91637	CRCW12061502FT
A5R2915	321-5015-00			RES,FXD:METAL FILM;562 OHM,1%,0.125W,TC=100	91637	CRCW12065620FT
A5R2916	321-5064-00			RES,FXD:METAL FILM;200K OHM,1%,0.125W	91637	CRCW1206-2003FT
A5R2917	321-5047-00			RES,FXD:METAL FILM;100K OHM,1%,0.125W	91637	CRCW12061003FT
A5R2918	311-5038-00			RES,VAR,TRMR:CERMET;20K OHM,25%,0.25W	TK2073	G4DT203E
A5R2919	321-5038-00			RES,FXD:METAL FILM;47.5K OHM,1%,0.125W	91637	CRCW12064752FT
A5R2920	321-5064-00			RES,FXD:METAL FILM;200K OHM,1%,0.125W	91637	CRCW1206-2003FT
A5R2921	321-5031-00			RES,FXD:METAL FILM;12.1K OHM,1%,0.125W	91637	CRCW12061212FT
A5R2922	321-5047-00			RES,FXD:METAL FILM;100K OHM,1%,0.125W	91637	CRCW12061003FT
A5R2923	321-5047-00			RES,FXD:METAL FILM;100K OHM,1%,0.125W	91637	CRCW12061003FT
A5R2924	321-5064-00			RES,FXD:METAL FILM;200K OHM,1%,0.125W	91637	CRCW1206-2003FT
A5R2925	321-5023-00			RES,FXD:METAL FILM;2.74K OHM,1%,0.125W	91637	CRCW12062741FT
A5R2926	321-5020-00			RES,FXD:METAL FILM;1.5K OHM,1%,0.125W	91637	CRCW12061501FT
A5R2927	321-5026-00			RES,FXD:METAL FILM;4.75K OHM,1%,0.125W	91637	CRCW12064751FT
A5R2928	321-5030-00			RES,FXD:METAL FILM;10.0K OHM,1%,0.125W	91637	CRCW12061002FT
A5R2929	321-5030-00			RES,FXD:METAL FILM;10.0K OHM,1%,0.125W	91637	CRCW12061002FT
A5R2930	321-5030-00			RES,FXD:METAL FILM;10.0K OHM,1%,0.125W	91637	CRCW12061002FT
A5R2931	311-5040-00	B050000	B050522	RES,VAR,NONWW:TRMR,10K OHM,25%,0.1W	TK2073	G4DT103M
A5R2931	311-5034-00	B050523		RES,VAR,TRMR:CERMET;2K OHM,25%,0.25W	TK2073	G4DT202M
A5R2932	321-5047-00			RES,FXD:METAL FILM;100K OHM,1%,0.125W	91637	CRCW12061003FT

Component Number	Tektronix Part No.	Serial No. Effective	Dscont	Name & Description	Mfr. Code	Mfr. Part No.
A5R2933	321-5064-00			RES,FXD:METAL FILM;200K OHM,1%,0.125W	91637	CRCW1206-2003FT
A5R2934	321-5064-00			RES,FXD:METAL FILM;200K OHM,1%,0.125W	91637	CRCW1206-2003FT
A5R2935	321-5047-00			RES,FXD:METAL FILM;100K OHM,1%,0.125W	91637	CRCW12061003FT
A5R2960	321-5030-00			RES,FXD:METAL FILM;10.0K OHM,1%,0.125W	91637	CRCW12061002FT
A5R2961	321-5030-00			RES,FXD:METAL FILM;10.0K OHM,1%,0.125W	91637	CRCW12061002FT
A5R2995	321-5030-00			RES,FXD:METAL FILM;10.0K OHM,1%,0.125W	91637	CRCW12061002FT
A5U2101	156-5157-01			IC,CONVERTER:BIPOLAR,D/A;12 BIT,300NS	18324	AM6012DT (D/C88
A5U2140	156-1342-01			IC,PROCESSOR:NMOS,MICROPROCESSOR	04713	MC68B02P
A5U2160	160-5876-00	B050000	B050249	MICROCKT,DGTL:8K X 8 EPROM,PRGM	80009	160587600
A5U2160	160-5876-01	B050250		MICROCKT,DGTL:8K X 8 EPROM,PRGM	TK0161	ORDER BY DESC
A5U2201	156-5147-01			IC,DIGITAL:HCTCMOS,FLIP FLOP;OCTAL D-TYPE	18324	74HCT273DT
A5U2210	156-5147-01			IC,DIGITAL:HCTCMOS,FLIP FLOP;OCTAL D-TYPE	18324	74HCT273DT
A5U2220	156-5071-01			IC,DIGITAL:HCTCMOS,TRANSCEIVER;OCTAL	18324	74HCT245DT
A5U2240	156-5489-01			IC,MISC:BIPOLAR,PWR SUPPLY SUPERVISOR	01295	TL7705ACDR
A5U2250	160-5874-00			IC,DIGITAL:STTL,PLD;PLA, PLS153A, 30NS	TK0161	160-5874-00
A5U2301	156-5147-01			IC,DIGITAL:HCTCMOS,FLIP FLOP;OCTAL D-TYPE	18324	74HCT273DT
A5U2310	156-5147-01			IC,DIGITAL:HCTCMOS,FLIP FLOP;OCTAL D-TYPE	18324	74HCT273DT
A5U2350	156-5071-01			IC,DIGITAL:HCTCMOS,TRANSCEIVER;OCTAL	18324	74HCT245DT
A5U2360	160-5877-01	B050000	B053646	MICROCKT,DGTL:16K X 8 X 8 EPROM,PRGM	80009	160587701
A5U2360	160-5877-02	B053647		MICROCKT,DGTL .:16K X 8 X 8 EPROM,PRGM	34649	ORDER BY DESC
A5U2401	156-5050-01			IC,MISC:HCMOS,ANALOG MUX;8-CHANNEL	18324	74HC4051DT
A5U2405	156-5409-01			IC,DIGITAL:HCTCMOS,LATCH;OCTAL D-TYPE	01295	SN74HCT573DWR
A5U2410	156-5459-01			IC,DIGITAL:HCMOS,TRANSCEIVER;OCTAL	01295	SN74HC245DR
A5U2415	156-5409-01			IC,DIGITAL:HCTCMOS,LATCH;OCTAL D-TYPE	01295	SN74HCT573DWR
A5U2420	156-2051-01			IC,LINEAR:BIFET,OP-AMP;QUAD	01295	TL074CDR
A5U2425	156-5409-01			IC,DIGITAL:HCTCMOS,LATCH;OCTAL D-TYPE	01295	SN74HCT573DWR
A5U2430	156-2051-01			IC,LINEAR:BIFET,OP-AMP;QUAD	01295	TL074CDR
A5U2440	156-5145-01			IC,DIGITAL:HCTCMOS,FLIP FLOP;DUAL D-TYPE	18324	74HCT74DT
A5U2450	156-5409-01			IC,DIGITAL:HCTCMOS,LATCH;OCTAL D-TYPE	01295	SN74HCT573DWR
A5U2460	156-2991-00			IC,MEMORY:CMOS,NVRAM;8K X 8,200NS,SRAM	0B0A9	DS1225Y
A5U2501	156-5050-01			IC,MISC:HCMOS,ANALOG MUX;8-CHANNEL	18324	74HC4051DT
A5U2510	156-5000-01			IC,LINEAR:BIPOLAR,COMPARATOR	01295	LM311DR
A5U2520	156-5138-01			IC,LINEAR:BIFET,OP-AMP;DUAL	01295	TL072CDR
A5U2521	156-5050-01			IC,MISC:HCMOS,ANALOG MUX;8-CHANNEL	18324	74HC4051DT
A5U2530	156-5050-01			IC,MISC:HCMOS,ANALOG MUX;8-CHANNEL	18324	74HC4051DT
A5U2540	156-5081-01			IC,DIGITAL:HCTMOS,GATE;HEX INVERTER	04713	MC74HCT04ADR2
A5U2550	156-5088-01			IC,DIGITAL:HCTCMOS,DEMUX/DECODER	18324	74HCT138DT
A5U2560	156-5145-01			IC,DIGITAL:HCTCMOS,FLIP FLOP;DUAL D-TYPE	18324	74HCT74DT
A5U2570	156-5145-01			IC,DIGITAL:HCTCMOS,FLIP FLOP;DUAL D-TYPE	18324	74HCT74DT
A5U2601	156-5050-01			IC,MISC:HCMOS,ANALOG MUX;8-CHANNEL	18324	74HC4051DT

Component Number	Tektronix Part No.	Serial No. Effective	Dscont	Name & Description	Mfr. Code	Mfr. Part No.
A5U2620	156-2051-01			IC,LINEAR:BIFET,OP-AMP;QUAD	01295	TL074CDR
A5U2630	156-2051-01			IC,LINEAR:BIFET,OP-AMP;QUAD	01295	TL074CDR
A5U2640	156-5567-01			IC,DIGITAL:CMOS,COUNTER;14-BIT BINARY	04713	MC14020BDR1 (2)
A5U2650	156-5088-01			IC,DIGITAL:HCTCMOS,DEMUX/DECODER	18324	74HCT138DT
A5U2660	156-5088-01			IC,DIGITAL:HCTCMOS,DEMUX/DECODER	18324	74HCT138DT
A5U2800	156-5120-01			IC,MISC:HCMOS,ANALOG MUX;4-CHANNEL	18324	74HC4052DT
A5U2805	156-5120-01			IC,MISC:HCMOS,ANALOG MUX;4-CHANNEL	18324	74HC4052DT
A5U2810	156-5098-01			IC,DIGITAL:HCTCMOS,GATE;QUAD 2-INPUT NAND	18324	74HCT00DT
A5U2820	156-2051-01			IC,LINEAR:BIFET,OP-AMP;QUAD	01295	TL074CDR
A5U2830	156-5306-01			IC,DIGITAL:HCTCMOS,COUNTER;DUAL 4-BIT	18324	74HCT393DT
A5U2835	156-5085-01			IC,DIGITAL:HCTCMOS,GATE;QUAD 2-INPUT	18324	74HCT32DT
A5U2850	156-5145-01			IC,DIGITAL:HCTCMOS,FLIP FLOP;DUAL D-TYPE	18324	74HCT74DT
A5U2855	156-5106-01			IC,DIGITAL:HCTCMOS,GATE;QUAD 2-INPUT NOR	18324	74HCT02DT
A5U2860	156-5569-01			IC,DIGITAL:HCTCMOS,REGISTER;8-BIT SHIFT REG	18324	74HCT299DT
A5U2865	156-5021-01			IC,DIGITAL:CMOS,REGISTER;8-STAGE	18324	HEF4094BTDT
A5U2870	156-5306-01			IC,DIGITAL:HCTCMOS,COUNTER;DUAL 4-BIT	18324	74HCT393DT
A5U2875	156-5145-01			IC,DIGITAL:HCTCMOS,FLIP FLOP;DUAL D-TYPE	18324	74HCT74DT
A5U2880	156-5145-01			IC,DIGITAL:HCTCMOS,FLIP FLOP;DUAL D-TYPE	18324	74HCT74DT
A5U2885	156-5130-01			IC,DIGITAL:HCTCMOS,GATE;TRIPLE 3-INPUT	18324	74HCT10DT
A5U2890	156-5098-01			IC,DIGITAL:HCTCMOS,GATE;QUAD 2-INPUT NAND	18324	74HCT00DT
A5U2900	156-5130-01			IC,DIGITAL:HCTCMOS,GATE;TRIPLE 3-INPUT	18324	74HCT10DT
A5U2905	156-5147-01			IC,DIGITAL:HCTCMOS,FLIP FLOP;OCTAL D-TYPE	18324	74HCT273DT
A5U2910	156-1555-00			IC,CONVERTER:BIPOLAR,D/A;8 BIT,200NS	34335	AM6080PC
A5U2920	156-5011-00	B050000	B050253	IC,MEMORY:CMOS,SRAM;8K X 8,150NS,OE	62786	HM6264LFP-15/12
A5U2920	156-5011-01	B050254		IC,MEMORY:CMOS,SRAM;8K X 8,150NS,OE	0JR04	TC5565AFL-15
A5U2930	160-5875-00			MICROCKT,DGTL:8K X 8 EPROM,PRGM	TK0161	160-5875-00
A5U2935	156-5071-01			IC,DIGITAL:HCTCMOS,TRANSCEIVER;OCTAL	18324	74HCT245DT
A5U2940	156-5306-01			IC,DIGITAL:HCTCMOS,COUNTER;DUAL 4-BIT	18324	74HCT393DT
A5U2950	156-5145-01			IC,DIGITAL:HCTCMOS,FLIP FLOP;DUAL D-TYPE	18324	74HCT74DT
A5U2960	156-5021-01			IC,DIGITAL:CMOS,REGISTER;8-STAGE	18324	HEF4094BTDT
A5U2965	156-5098-01			IC,DIGITAL:HCTCMOS,GATE;QUAD 2-INPUT NAND	18324	74HCT00DT
A5U2970	156-5098-01	B050000	B050846	IC,DIGITAL:HCTCMOS,GATE;QUAD 2-INPUT NAND	18324	74HCT00DT
A5U2970	156-5146-01	B050847		IC,DIGITAL:HCTCMOS,GATE;QUAD 2-INPUT AND	18324	74HCT08DT
A5U2975	156-5098-01			IC,DIGITAL:HCTCMOS,GATE;QUAD 2-INPUT NAND	18324	74HCT00DT
A5U2980	156-5098-01			IC,DIGITAL:HCTCMOS,GATE;QUAD 2-INPUT NAND	18324	74HCT00DT
A5U2985	156-5568-01			IC,DIGITAL:HCTCMOS,REGISTER;4-BIT	18324	74HCT194DT
A5U2990	156-5198-01			IC,DIGITAL:HCTCMOS,GATE;QUAD 2-INPUT	18324	74HCT86DT
A5U2995	156-5135-01			IC,DIGITAL:HCTCMOS,REGISTER;8-BIT SIPO	18324	74HCT164DT
A5W411	174-1366-00			CA ASSY,SP,ELEC:26,28 AWG,3.0 L	53387	ORDER BY DESC
A5W511	174-1501-00			CA ASSY,SP,ELEC:26,28 AWG,2.0 L,RIBBON	TK1547	ORDER BY DESC

Component Number	Tektronix Part No.	Serial No. Effective	Dscont	Name & Description	Mfr. Code	Mfr. Part No.
A5W512	174-1502-00			CA ASSY,SP,ELEC:34,28 AWG,2.0 L,RIBBON	TK1547	ORDER BY DESC
A5XU2360	136-0755-00			SOCKET,DIP:PCB,;FEMALE,STR,2 X 14,28 POS	09922	DILB28P-108
A5Y2540	158-5005-00			OSC,XTAL CLOCK:10MHZ,+/- 0.01 %,TTL	TK2424	MSOTETAPE 10MGH

Component Number	Tektronix Part No.	Serial No. Effective	Dscont	Name & Description	Mfr. Code	Mfr. Part No.
A6	614-0825-00			FRONT PNL ASSY:STANDARD (STANDARD)	80009	614082500
A6	614-0826-00			FRONT PNL ASSY:TV OPTION (OPTION 05)	80009	614082600
A6P3001	131-3478-01			CONN,BOX:PCB,;FEMALE,STR,2 X 10,0.1 CTR	58050	EX-0108
A6R3007	311-2318-00			RES,VAR,NONWW:5K OHM,30%,0.5W	32997	91Z1A-ZZZ-EA010
A6R3008	311-2316-00			RES,VAR,NONWW:2K OHM,20%,0.5W	32997	91Z1A-ZZZ-EA010
A6R3009	311-2317-00			RES,VAR,NONWW:5K OHM,30%,0.25W	32997	91Z2A-ZZZ-EA010
A6R3010	311-2318-00			RES,VAR,NONWW:5K OHM,30%,0.5W	32997	91Z1A-ZZZ-EA010
A6R3011	311-2316-00			RES,VAR,NONWW:2K OHM,20%,0.5W	32997	91Z1A-ZZZ-EA010
A6R3012	311-2317-00			RES,VAR,NONWW:5K OHM,30%,0.25W	32997	91Z2A-ZZZ-EA010
A6R3013	311-2316-00			RES,VAR,NONWW:2K OHM,20%,0.5W	32997	91Z1A-ZZZ-EA010
A6R3014	311-2318-00			RES,VAR,NONWW:5K OHM,30%,0.5W	32997	91Z1A-ZZZ-EA010
A6R3015	311-2316-00			RES,VAR,NONWW:2K OHM,20%,0.5W	32997	91Z1A-ZZZ-EA010
A6R3016	311-2316-00			RES,VAR,NONWW:2K OHM,20%,0.5W	32997	91Z1A-ZZZ-EA010
A6R3017	311-2316-00			RES,VAR,NONWW:2K OHM,20%,0.5W	32997	91Z1A-ZZZ-EA010
A6R3018	311-2318-00			RES,VAR,NONWW:5K OHM,30%,0.5W	32997	91Z1A-ZZZ-EA010
A6R3019	311-2316-00			RES,VAR,NONWW:2K OHM,20%,0.5W	32997	91Z1A-ZZZ-EA010
A6A1	670-9236-01			CIRCUIT BD ASSY:FRONT PANEL;	80009	670923601
A6A1C3001	281-0909-00			CAP,FXD,CER DI:0.022UF,20%,50V	04222	SA105C223MAA
A6A1C3002	281-0909-00			CAP,FXD,CER DI:0.022UF,20%,50V	04222	SA105C223MAA
A6A1C3019	281-0909-00			CAP,FXD,CER DI:0.022UF,20%,50V	04222	SA105C223MAA
A6A1CR3001	152-0141-02			DIODE,SIG:,ULTRA FAST;40V,150MA,4NS,2PF	27014	FDH9427
A6A1CR3002	152-0141-02			DIODE,SIG:,ULTRA FAST;40V,150MA,4NS,2PF	27014	FDH9427
A6A1CR3003	152-0141-02			DIODE,SIG:,ULTRA FAST;40V,150MA,4NS,2PF	27014	FDH9427
A6A1CR3004	152-0141-02			DIODE,SIG:,ULTRA FAST;40V,150MA,4NS,2PF	27014	FDH9427
A6A1CR3005	152-0141-02			DIODE,SIG:,ULTRA FAST;40V,150MA,4NS,2PF	27014	FDH9427
A6A1CR3006	152-0141-02			DIODE,SIG:,ULTRA FAST;40V,150MA,4NS,2PF	27014	FDH9427
A6A1CR3007	152-0141-02			DIODE,SIG:,ULTRA FAST;40V,150MA,4NS,2PF	27014	FDH9427
A6A1CR3008	152-0141-02			DIODE,SIG:,ULTRA FAST;40V,150MA,4NS,2PF	27014	FDH9427
A6A1CR3009	152-0141-02			DIODE,SIG:,ULTRA FAST;40V,150MA,4NS,2PF	27014	FDH9427
A6A1CR3010	152-0141-02			DIODE,SIG:,ULTRA FAST;40V,150MA,4NS,2PF	27014	FDH9427
A6A1CR3011	152-0141-02			DIODE,SIG:,ULTRA FAST;40V,150MA,4NS,2PF	27014	FDH9427
A6A1CR3012	152-0141-02			DIODE,SIG:,ULTRA FAST;40V,150MA,4NS,2PF	27014	FDH9427
A6A1CR3013	152-0141-02			DIODE,SIG:,ULTRA FAST;40V,150MA,4NS,2PF	27014	FDH9427
A6A1CR3014	152-0141-02			DIODE,SIG:,ULTRA FAST;40V,150MA,4NS,2PF	27014	FDH9427
A6A1CR3015	152-0141-02			DIODE,SIG:,ULTRA FAST;40V,150MA,4NS,2PF	27014	FDH9427
A6A1CR3016	152-0141-02			DIODE,SIG:,ULTRA FAST;40V,150MA,4NS,2PF	27014	FDH9427
A6A1CR3017	152-0141-02			DIODE,SIG:,ULTRA FAST;40V,150MA,4NS,2PF	27014	FDH9427
A6A1CR3018	152-0141-02			DIODE,SIG:,ULTRA FAST;40V,150MA,4NS,2PF	27014	FDH9427
A6A1CR3019	152-0141-02			DIODE,SIG:,ULTRA FAST;40V,150MA,4NS,2PF	27014	FDH9427

Component Number	Tektronix Part No.	Serial No. Effective	Dscont	Name & Description	Mfr. Code	Mfr. Part No.
A6A1CR3020	152-0141-02			DIODE,SIG:,ULTRA FAST;40V,150MA,4NS,2PF	27014	FDH9427
A6A1CR3021	152-0141-02			DIODE,SIG:,ULTRA FAST;40V,150MA,4NS,2PF	27014	FDH9427
A6A1CR3022	152-0141-02			DIODE,SIG:,ULTRA FAST;40V,150MA,4NS,2PF	27014	FDH9427
A6A1CR3023	152-0141-02			DIODE,SIG:,ULTRA FAST;40V,150MA,4NS,2PF	27014	FDH9427
A6A1CR3024	152-0141-02			DIODE,SIG:,ULTRA FAST;40V,150MA,4NS,2PF	27014	FDH9427
A6A1CR3025	152-0141-02			DIODE,SIG:,ULTRA FAST;40V,150MA,4NS,2PF	27014	FDH9427
A6A1CR3026	152-0141-02			DIODE,SIG:,ULTRA FAST;40V,150MA,4NS,2PF	27014	FDH9427
A6A1CR3027	152-0141-02			DIODE,SIG:,ULTRA FAST;40V,150MA,4NS,2PF	27014	FDH9427
A6A1CR3028	152-0141-02			DIODE,SIG:,ULTRA FAST;40V,150MA,4NS,2PF	27014	FDH9427
A6A1CR3029	152-0141-02			DIODE,SIG:,ULTRA FAST;40V,150MA,4NS,2PF	27014	FDH9427
A6A1CR3030	152-0141-02			DIODE,SIG:,ULTRA FAST;40V,150MA,4NS,2PF	27014	FDH9427
A6A1CR3031	152-0141-02			DIODE,SIG:,ULTRA FAST;40V,150MA,4NS,2PF	27014	FDH9427
A6A1CR3032	152-0141-02			DIODE,SIG:,ULTRA FAST;40V,150MA,4NS,2PF	27014	FDH9427
A6A1CR3033	152-0141-02			DIODE,SIG:,ULTRA FAST;40V,150MA,4NS,2PF	27014	FDH9427
A6A1CR3034	152-0141-02			DIODE,SIG:,ULTRA FAST;40V,150MA,4NS,2PF	27014	FDH9427
A6A1CR3035	152-0141-02			DIODE,SIG:,ULTRA FAST;40V,150MA,4NS,2PF	27014	FDH9427
A6A1CR3036	152-0141-02			DIODE,SIG:,ULTRA FAST;40V,150MA,4NS,2PF	27014	FDH9427
A6A1CR3037	152-0141-02			DIODE,SIG:,ULTRA FAST;40V,150MA,4NS,2PF	27014	FDH9427
A6A1CR3038	152-0141-02			DIODE,SIG:,ULTRA FAST;40V,150MA,4NS,2PF	27014	FDH9427
A6A1CR3039	152-0141-02			DIODE,SIG:,ULTRA FAST;40V,150MA,4NS,2PF	27014	FDH9427
A6A1CR3040	152-0141-02			DIODE,SIG:,ULTRA FAST;40V,150MA,4NS,2PF	27014	FDH9427
A6A1CR3041	152-0141-02			DIODE,SIG:,ULTRA FAST;40V,150MA,4NS,2PF	27014	FDH9427
A6A1CR3042	152-0141-02			DIODE,SIG:,ULTRA FAST;40V,150MA,4NS,2PF	27014	FDH9427
A6A1CR3043	152-0141-02			DIODE,SIG:,ULTRA FAST;40V,150MA,4NS,2PF	27014	FDH9427
A6A1CR3044	152-0141-02			DIODE,SIG:,ULTRA FAST;40V,150MA,4NS,2PF	27014	FDH9427
A6A1DS3001	150-1161-00			LT EMITTING DIO:YELLOW	50434	QLMP-1487
A6A1DS3002	150-1160-00			LT EMITTING DIO:GREEN	50434	QLMP 1587
A6A1DS3003	150-1160-00			LT EMITTING DIO:GREEN	50434	QLMP 1587
A6A1DS3004	150-1160-00			LT EMITTING DIO:GREEN	50434	QLMP 1587
A6A1DS3005	150-1160-00			LT EMITTING DIO:GREEN	50434	QLMP 1587
A6A1DS3006	150-1161-00			LT EMITTING DIO:YELLOW	50434	QLMP-1487
A6A1DS3007	150-1160-00			LT EMITTING DIO:GREEN	50434	QLMP 1587
A6A1DS3008	150-1160-00			LT EMITTING DIO:GREEN	50434	QLMP 1587
A6A1DS3009	150-1160-00			LT EMITTING DIO:GREEN	50434	QLMP 1587
A6A1DS3010	150-1160-00			LT EMITTING DIO:GREEN	50434	QLMP 1587
A6A1DS3011	150-1160-00			LT EMITTING DIO:GREEN	50434	QLMP 1587
A6A1DS3012	150-1161-00			LT EMITTING DIO:YELLOW	50434	QLMP-1487
A6A1DS3013	150-1160-00			LT EMITTING DIO:GREEN	50434	QLMP 1587
A6A1DS3014	150-1160-00			LT EMITTING DIO:GREEN	50434	QLMP 1587
A6A1DS3015	150-1160-00			LT EMITTING DIO:GREEN	50434	QLMP 1587

Component Number	Tektronix Part No.	Serial No. Effective	Dscont	Name & Description	Mfr. Code	Mfr. Part No.
A6A1DS3016	150-1160-00			LT EMITTING DIO:GREEN	50434	QLMP 1587
A6A1DS3017	150-1161-00			LT EMITTING DIO:YELLOW	50434	QLMP-1487
A6A1DS3018	150-1160-00			LT EMITTING DIO:GREEN	50434	QLMP 1587
A6A1DS3019	150-1161-00			LT EMITTING DIO:YELLOW	50434	QLMP-1487
A6A1DS3020	150-1160-00			LT EMITTING DIO:GREEN	50434	QLMP 1587
A6A1DS3021	150-1161-00			LT EMITTING DIO:YELLOW	50434	QLMP-1487
A6A1DS3022	150-1161-00			LT EMITTING DIO:YELLOW	50434	QLMP-1487
A6A1DS3023	150-1160-00			LT EMITTING DIO:GREEN	50434	QLMP 1587
A6A1DS3024	150-1160-00			LT EMITTING DIO:GREEN	50434	QLMP 1587
A6A1DS3025	150-1160-00			LT EMITTING DIO:GREEN	50434	QLMP 1587
A6A1DS3026	150-1160-00			LT EMITTING DIO:GREEN	50434	QLMP 1587
A6A1DS3027	150-1161-00			LT EMITTING DIO:YELLOW	50434	QLMP-1487
A6A1DS3028	150-1161-00			LT EMITTING DIO:YELLOW	50434	QLMP-1487
A6A1DS3029	150-1160-00			LT EMITTING DIO:GREEN	50434	QLMP 1587
A6A1DS3030	150-1160-00			LT EMITTING DIO:GREEN	50434	QLMP 1587
A6A1DS3031	150-1160-00			LT EMITTING DIO:GREEN	50434	QLMP 1587
A6A1DS3032	150-1160-00			LT EMITTING DIO:GREEN	50434	QLMP 1587
A6A1DS3033	150-1161-00			LT EMITTING DIO:YELLOW	50434	QLMP-1487
A6A1DS3034	150-1160-00			LT EMITTING DIO:GREEN	50434	QLMP 1587
A6A1DS3035	150-1160-00			LT EMITTING DIO:GREEN	50434	QLMP 1587
A6A1DS3036	150-1161-00			LT EMITTING DIO:YELLOW	50434	QLMP-1487
A6A1DS3037	150-1160-00			LT EMITTING DIO:GREEN	50434	QLMP 1587
A6A1DS3038	150-1160-00			LT EMITTING DIO:GREEN	50434	QLMP 1587
A6A1DS3039	150-1160-00			LT EMITTING DIO:GREEN	50434	QLMP 1587
A6A1DS3040	150-1160-00			LT EMITTING DIO:GREEN	50434	QLMP 1587
A6A1DS3041	150-1161-00			LT EMITTING DIO:YELLOW	50434	QLMP-1487
A6A1DS3042	150-1160-00			LT EMITTING DIO:GREEN	50434	QLMP 1587
A6A1DS3043	150-1161-00			LT EMITTING DIO:YELLOW	50434	QLMP-1487
A6A1DS3044	150-1161-00			LT EMITTING DIO:YELLOW	50434	QLMP-1487
A6A1DS3045	150-1161-00			LT EMITTING DIO:YELLOW	50434	QLMP-1487
A6A1DS3046	150-1160-00			LT EMITTING DIO:GREEN	50434	QLMP 1587
A6A1DS3047	150-1160-00			LT EMITTING DIO:GREEN	50434	QLMP 1587
A6A1DS3048	150-1160-00			LT EMITTING DIO:GREEN	50434	QLMP 1587
A6A1DS3049	150-1160-00			LT EMITTING DIO:GREEN	50434	QLMP 1587
A6A1R3001	307-0486-00			RES NTWK,FXD,FI:100 OHM,20%,1.125W	11236	750-101-R100OHM
A6A1R3002	307-0695-00			RES NTWK,FXD,FI:9,150 OHM,2%,0.2W EA	11236	750-101-R150
A6A1R3003	307-0486-00			RES NTWK,FXD,FI:100 OHM,20%,1.125W	11236	750-101-R100OHM
A6A1R3004	313-1151-00			RES,FXD,FILM:150 OHM,5%,0.2W	91637	CCF50-2-150R0J
A6A1R3005	313-1151-00			RES,FXD,FILM:150 OHM,5%,0.2W	91637	CCF50-2-150R0J
A6A1R3006	313-1101-00			RES,FXD,FILM:100 OHM,5%,0.2W	91637	CCF50-2-100R0J

Component Number	Tektronix Part No.	Serial No. Effective	Dscont	Name & Description	Mfr. Code	Mfr. Part No.
A6A1S3001	260-2280-00			SW,PUSH BUTTOYN:MINIATURE MOMENTAR	31918	KSA-0-0-A
A6A1S3002	260-2280-00			SW,PUSH BUTTON:MINIATURE MOMENTARY	31918	KSA-0-0-A
A6A1S3003	260-2280-00			SW,PUSH BUTTON:MINIATURE MOMENTARY	31918	KSA-0-0-A
A6A1S3004	260-2283-00			SWITCH,ROTARY:VOLTS/DIV	76854	2240-MM-P/REL
A6A1S3005	260-2280-00			SW,PUSH BUTTON:MINIATURE MOMENTARY	31918	KSA-0-0-A
A6A1S3006	260-2280-00			SW,PUSH BUTTON:MINIATURE MOMENTARY	31918	KSA-0-0-A
A6A1S3007	260-2280-00			SW,PUSH BUTTON:MINIATURE MOMENTARY	31918	KSA-0-0-A
A6A1S3008	260-2280-00			SW,PUSH BUTTON:MINIATURE MOMENTARY	31918	KSA-0-0-A
A6A1S3009	260-2280-00			SW,PUSH BUTTON:MINIATURE MOMENTARY	31918	KSA-0-0-A
A6A1S3010	260-2280-00			SW,PUSH BUTTON:MINIATURE MOMENTARY	31918	KSA-0-0-A
A6A1S3011	260-2280-00			SW,PUSH BUTTON:MINIATURE MOMENTARY	31918	KSA-0-0-A
A6A1S3012	260-2280-00			SW,PUSH BUTTON:MINIATURE MOMENTARY	31918	KSA-0-0-A
A6A1S3013	260-2283-00			SWITCH,ROTARY:VOLTS/DIV	76854	2240-MM-P/REL
A6A1S3014	260-2280-00			SW,PUSH BUTTON:MINIATURE MOMENTARY	31918	KSA-0-0-A
A6A1S3015	260-2280-00			SW,PUSH BUTTON:MINIATURE MOMENTARY	31918	KSA-0-0-A
A6A1S3016	260-2280-00			SW,PUSH BUTTON:MINIATURE MOMENTARY	31918	KSA-0-0-A
A6A1S3017	260-2280-00			SW,PUSH BUTTON:MINIATURE MOMENTARY	31918	KSA-0-0-A
A6A1S3018	260-2280-00			SW,PUSH BUTTON:MINIATURE MOMENTARY	31918	KSA-0-0-A
A6A1S3019	260-2283-00			SWITCH,ROTARY:VOLTS/DIV	76854	2240-MM-P/REL
A6A1S3020	260-2280-00			SW,PUSH BUTTON:MINIATURE MOMENTARY	31918	KSA-0-0-A
A6A1S3021	260-2164-01			SWITCH,SLIDE:SPDT,4A,20VAC	09353	1101 AV2 BE2
A6A1S3022	260-2280-00			SW,PUSH BUTTON:MINIATURE MOMENTARY	31918	KSA-0-0-A
A6A1S3023	260-2280-00			SW,PUSH BUTTON:MINIATURE MOMENTARY	31918	KSA-0-0-A
A6A1S3024	260-2280-00			SW,PUSH BUTTON:MINIATURE MOMENTARY	31918	KSA-0-0-A
A6A1S3025	260-2280-00			SW,PUSH BUTTON:MINIATURE MOMENTARY	31918	KSA-0-0-A
A6A1S3026	260-2280-00			SW,PUSH BUTTON:MINIATURE MOMENTARY	31918	KSA-0-0-A
A6A1S3027	260-2280-00			SW,PUSH BUTTON:MINIATURE MOMENTARY	31918	KSA-0-0-A
A6A1S3028	260-2280-00			SW,PUSH BUTTON:MINIATURE MOMENTARY	31918	KSA-0-0-A
A6A1S3029	260-2280-00			SW,PUSH BUTTON:MINIATURE MOMENTARY	31918	KSA-0-0-A
A6A1S3030	260-2280-00			SW,PUSH BUTTON:MINIATURE MOMENTARY	31918	KSA-0-0-A
A6A1S3031	260-2280-00			SW,PUSH BUTTON:MINIATURE MOMENTARY	31918	KSA-0-0-A
A6A1S3032	260-2280-00			SW,PUSH BUTTON:MINIATURE MOMENTARY	31918	KSA-0-0-A
A6A1S3033	260-2280-00			SW,PUSH BUTTON:MINIATURE MOMENTARY	31918	KSA-0-0-A
A6A1S3034	260-2280-00			SW,PUSH BUTTON:MINIATURE MOMENTARY	31918	KSA-0-0-A
A6A1S3035	260-2280-00			SW,PUSH BUTTON:MINIATURE MOMENTARY	31918	KSA-0-0-A
A6A1U3001	156-2120-00			IC,DIGITAL:FTTL,SHIFT REGISTER;8-BIT SIPO	27014	74F164APC
A6A1U3002	156-2120-00			IC,DIGITAL:FTTL,SHIFT REGISTER;8-BIT SIPO	27014	74F164APC
A6A1U3003	156-2120-00			IC,DIGITAL:FTTL,SHIFT REGISTER;8-BIT SIPO	27014	74F164APC
A6A1U3004	156-2120-00			IC,DIGITAL:FTTL,SHIFT REGISTER;8-BIT SIPO	27014	74F164APC
A6A1U3005	156-2120-00			IC,DIGITAL:FTTL,SHIFT REGISTER;8-BIT SIPO	27014	74F164APC

Component Number	Tektronix Part No.	Serial No. Effective	Dscont	Name & Description	Mfr. Code	Mfr. Part No.
A6A1U3006	156-2120-00			IC,DIGITAL:FTTL,SHIFT REGISTER;8-BIT SIPO	27014	74F164APC
A6A1W652	175-9916-00			CA ASSY,SP,ELEC:20,28 AWG,11.0 L	53387	175-9916-00

Component Number	Tektronix Part No.	Serial No. Effective	Dscont	Name & Description	Mfr. Code	Mfr. Part No.
A8	670-7280-00			CIRCUIT BD ASSY:SCALE ILLUM	80009	670728000
A8DS100	150-0057-01			LAMP,INCAND:5V,0.115A,WIRE LD,AGED & SEL	S3774	OL7153AS15TPL
A8DS101	150-0057-01			LAMP,INCAND:5V,0.115A,WIRE LD,AGED & SEL	S3774	OL7153AS15TPL
A8DS102	150-0057-01			LAMP,INCAND:5V,0.115A,WIRE LD,AGED & SEL	S3774	OL7153AS15TPL

Component Number	Tektronix Part No.	Serial No. Effective	Dscont	Name & Description	Mfr. Code	Mfr. Part No.
A9	670-7277-09	B010100	B056317	CIRCUIT BD ASSY:HIGH VOLTAGE	80009	670727709
A9	670-7277-11	B056318		CIRCUIT BD ASSY:HIGH VOLTAGE	80009	670727711
A9C91	283-0084-00			CAP,FXD,CER DI:270PF,5%,1000V	59660	838 533 X5FO 27
A9C1812	285-1430-00	B050000	B056317	CAP,FXD,PLASTIC:0.047UF,10%,400V	84411	TEK-296
A9C1812	285-1430-01	B056318		CAP,FXD,PLASTIC:0.047UF,10%,400V	TK1913	MK$2,.047/400/2
A9C1813	285-1430-00	B050000	B056317	CAP,FXD,PLASTIC:0.047UF,10%,400V	84411	TEK-296
A9C1813	285-1430-01	B056318		CAP,FXD,PLASTIC:0.047UF,10%,400V	TK1913	MK$2,.047/400/2
A9C1814	285-1430-00	B050000	B056317	CAP,FXD,PLASTIC:0.047UF,10%,400V	84411	TEK-296
A9C1814	285-1430-01	B056318		CAP,FXD,PLASTIC:0.047UF,10%,400V	TK1913	MK$2,.047/400/2
A9C1815	285-1430-00	B050000	B056317	CAP,FXD,PLASTIC:0.047UF,10%,400V	84411	TEK-296
A9C1815	285-1430-01	B056318		CAP,FXD,PLASTIC:0.047UF,10%,400V	TK1913	MK$2,.047/400/2
A9C1870	281-0773-00			CAP,FXD,CER DI:0.01UF,10%,100V	TK1743	CGB103KEX
A9C1885	285-1430-00			CAP,FXD,PLASTIC:0.047UF,10%,400V	84411	TEK-296
A9C1886	285-1430-00			CAP,FXD,PLASTIC:0.047UF,10%,400V	84411	TEK-296
A9C1888	285-1430-00			CAP,FXD,PLASTIC:0.047UF,10%,400V	84411	TEK-296
A9C1889	285-1430-00			CAP,FXD,PLASTIC:0.047UF,10%,400V	84411	TEK-296
A9C1890	281-0775-01			CAP,FXD,CER DI:0.1UF,20%,50V	04222	SA105E104MAA
A9C1891	281-0773-00			CAP,FXD,CER DI:0.01UF,10%,100V	TK1743	CGB103KEX
A9C1912	281-0798-00			CAP,FXD,CER DI:51PF,1%,100V	TK1743	CGB510GEN
A9C1915	281-0783-00	B010100	B050220	CAP,FXD,CER DI:0.1 UF 20%,100V	04222	SA301E104MAA
A9C1915	285-1356-00	B050221		CAP,FXD,PLASTIC:0.047UF,20%,250V	84411	X665 473M250
A9C1932	281-0775-01			CAP,FXD,CER DI:0.1UF,20%,50V	04222	SA105E104MAA
A9C1950	281-0766-00			CAP,FXD,CER DI:100PF,20%,200V	04222	SA102A101KAA
A9C1951	290-0269-01			CAP,FXD,ELCTLT:0.22UF,5%,35V,1KHZ	2N936	173D224X5035U
A9C1971	285-1430-00			CAP,FXD,PLASTIC:0.047UF,10%,400V	84411	TEK-296
A9C1972	290-0747-00			CAP,FXD,ELCTLT:100UF,+50-20%,25WVDC	0J9R5	CE02W1E101F
A9C1973	281-0826-00			CAP,FXD,CER DI:2200PF,10%,100V	TK1743	CGB222KEX
A9C1980	281-0826-00			CAP,FXD,CER DI:2200PF,10%,100V	TK1743	CGB222KEX
A9C1990	285-1096-00			CAP,FXD,PLASTIC:1UF,10%,50V	14752	230B1A105K
A9C1991	281-0826-00			CAP,FXD,CER DI:2200PF,10%,100V	TK1743	CGB222KEX
A9CR1894	152-0400-00			DIODE,RECT:,FAST RCVRY;400V,1A,200NS	14552	MB2501
A9CR1895	152-0400-00			DIODE,RECT:,FAST RCVRY;400V,1A,200NS	14552	MB2501
A9CR1915	152-0061-00			DIODE,SIG:,;200V,0.1A,700NS,4.0PF	27014	FDH2161
A9CR1930	152-0061-00			DIODE,SIG:,;200V,0.1A,700NS,4.0PF	27014	FDH2161
A9CR1950	152-0061-00			DIODE,SIG:,;200V,0.1A,700NS,4.0PF	27014	FDH2161
A9CR1953	152-0061-00			DIODE,SIG:,;200V,0.1A,700NS,4.0PF	27014	FDH2161
A9CR1990	152-0141-02			DIODE,SIG:,ULTRA FAST;40V,150MA,4NS,2PF	27014	FDH9427
A9DS90	150-0030-00			LAMP,GLOW:60-90V MAX,0.6MA	0J9R2	NE-2B(AC/DC)R-T
A9DS91	150-0030-00			LAMP,GLOW:60-90V MAX,0.6MA	0J9R2	NE-2B(AC/DC)R-T
A9F1900	159-0185-00			FUSE,CARTRIDGE:5.2 X 20MM,0.75A,125V	61857	TSC-750MA

Component Number	Tektronix Part No.	Serial No. Effective	Dscont	Name & Description	Mfr. Code	Mfr. Part No.
A9J901	131-0589-00			TERMINAL,PIN:PRESSFIT/PCB,;MALE,STR (QUANTITY OF 9)	22526	48283-087
A9J902	131-0589-00			TERMINAL,PIN:PRESSFIT/PCB,;MALE,STR (QUANTITY OF 2)	22526	48283-087
A9J903	131-0589-00			TERMINAL,PIN:PRESSFIT/PCB,;MALE,STR (QUANTITY OF 2)	22526	48283-087
A9J904	131-0589-00			TERMINAL,PIN:PRESSFIT/PCB,;MALE,STR	22526	48283-087
A9L1921	108-0262-00			COIL,RF:FIXED,505NH	0JR03	108-0262-00
A9L1974	108-0318-00			COIL,RF:FIXED,100UH	0JR03	ORDER BY DESC
A9P191	131-3461-00			CONN,HDR:PCB,;MALE,RTANG,1 X 18,0.1 CTR	58050	082-1843-RS09
A9P900	--------			(SUBPART OF A9W900)		
A9Q1851	151-0443-00			TRANSISTOR,SIG:BIPOLAR,PNP;300V,500MA	04713	MPSA92
A9Q1852	151-0443-00			TRANSISTOR,SIG:BIPOLAR,PNP;300V,500MA	04713	MPSA92
A9Q1890	151-0443-00			TRANSISTOR,SIG:BIPOLAR,PNP;300V,500MA	04713	MPSA92
A9Q1980	151-0444-00			TRANSISTOR,SIG:BIPOLAR,NPN;350V,500MA	04713	2N6517
A9Q1981	151-0745-00			TRANSISTOR,PWR:BIPOLAR,PNP;120V,10A,60MHZ	61271	2SA1077G
A9R1812	315-0100-02			RES,FXD,CMPSN:10 OHM,5%,0.25W	01121	CB1005
A9R1813	315-0100-02			RES,FXD,CMPSN:10 OHM,5%,0.25W	01121	CB1005
A9R1814	315-0103-00			RES,FXD,FILM:10K OHM,5%,0.25W	TK1727	SFR25 2322-181
A9R1815	315-0103-00			RES,FXD,FILM:10K OHM,5%,0.25W	TK1727	SFR25 2322-181
A9R1833	313-1103-00			RES,FXD,FILM:10K OHM,5%,0.2W	91637	CCF50-2-10001J
A9R1834	313-1103-00			RES,FXD,FILM:10K OHM,5%,0.2W	91637	CCF50-2-10001J
A9R1842	311-2234-00			RES,VAR,TRMR:CERMET;5K OHM,20%,0.5W	TK2073	GF06UT2 502 M L
A9R1848	311-2234-00			RES,VAR,TRMR:CERMET;5K OHM,20%,0.5W	TK2073	GF06UT2 502 M L
A9R1853	321-0447-00			RES,FXD,FILM:442K OHM,1%,0.125W,TC=T0	91637	CMF55116G44202F
A9R1854	321-0435-00			RES,FXD,FILM:332K OHM,1%,0.125W,TC=T0	91637	CMF55116G33202F
A9R1855	321-0407-00			RES,FXD,FILM:169K OHM,1%,0.125W,TC=T0	91637	CMF55116G16902F
A9R1856	321-0367-00			RES,FXD,FILM:64.9K OHM,1%,0.125W,TC=T0	91637	CMF55116G64901F
A9R1857	321-0364-00			RES,FXD,FILM:60.4K OHM,1%,0.125W,TC=T0	91637	CMF55116G60401F
A9R1858	313-1105-00			RES,FXD,FILM:1M OHM,5%,0.2W	91637	CCF50-2-10003J
A9R1864	311-2236-00			RES,VAR,TRMR:CERMET;20K OHM,20%,0.5W	TK2073	GF06UT2 203 M L
A9R1870	311-2239-00			RES,VAR,TRMR:CERMET;100K OHM,20%,0.5W	TK2073	GF06UT2 104 M L
A9R1871	315-0154-00			RES,FXD,FILM:150K OHM,5%,0.25W,	TK1727	SFR25 2322-181
A9R1872	315-0184-00			RES,FXD,FILM:180K OHM,5%,0.25W	TK1727	SFR25 2322-181
A9R1873	313-1103-00			RES,FXD,FILM:10K OHM,5%,0.2W	91637	CCF50-2-10001J
A9R1878	311-2239-00			RES,VAR,TRMR:CERMET;100K OHM,20%,0.5W	TK2073	GF06UT2 104 M L
A9R1880	315-0434-00			RES,FXD,FILM:430K OHM,5%,0.25W	TK1727	SFR25 2322-181
A9R1881	321-0385-00			RES,FXD,FILM:100K OHM,1%,0.125W,TC=T0	91637	CMF55116G10002F
A9R1885	315-0103-00			RES,FXD,FILM:10K OHM,5%,0.25W	TK1727	SFR25 2322-181
A9R1888	315-0100-02			RES,FXD,CMPSN:10 OHM,5%,0.25W	01121	CB1005
A9R1890	313-1473-00			RES,FXD,FILM:47K OHM,5%,0.2W	91637	CCF50-2-47001J
A9R1891	321-0481-04			RES,FXD,FILM:1M OHM,0.1%,0.125W,TC=T2	19701	5033RC1M000B

Component Number	Tektronix Part No.	Serial No. Effective	Dscont	Name & Description	Mfr. Code	Mfr. Part No.
A9R1892	321-0693-00			RES,FXD,FILM:68.1K OHM,0.5%,0.125W,TC=T0	19701	5033RD6812DB298
A9R1893	321-0481-04			RES,FXD,FILM:1M OHM,0.1%,0.125W,TC=T2	19701	5033RC1M000B
A9R1895	313-1302-00			RES,FXD,FILM:3K OHM,5%,0.2W	91637	CCF50-2-30000J
A9R1896	315-0100-02			RES,FXD,CMPSN:10 OHM,5%,0.25W	01121	CB1005
A9R1897	313-1102-00			RES,FXD,FILM:1K OHM,5%,0.2W	91637	CCF50-2-10000J
A9R1898	313-1102-00			RES,FXD,FILM:1K OHM,5%,0.2W	91637	CCF50-2-10000J
A9R1901	315-0101-03			RES,FXD,CMPSN:100 OHM,5%,0.25W	01121	CB1015
A9R1910	321-0271-00			RES,FXD,FILM:6.49K OHM,1%,0.125W,TC=T0	91637	CMF55116G64900F
A9R1911	321-0245-00			RES,FXD,FILM:3.48K OHM,1%,0.125W,TC=T0	91637	CMF55116G34800F
A9R1913	315-0101-03			RES,FXD,CMPSN:100 OHM,5%,0.25W	01121	CB1015
A9R1920	315-0152-00			RES,FXD,FILM:1.5K OHM,5%,0.25W	TK1727	SFR25 2322-181-
A9R1922	315-0331-03			RES,FXD,CMPSN:330 OHM 5%,0.25W	01121	CB3315 ALLEN BR
A9R1941	313-1201-00			RES,FXD,FILM:200 OHM,5%,0.2W	91637	CCF50-2-200R0J
A9R1944	321-0306-00			RES,FXD,FILM:15.0K OHM,1%,0.125W,TC=T0	91637	CMF55116G15001F
A9R1945	321-0963-07			RES,FXD,FILM:98.73K OHM,0.1%,0.125W,TC=T9	01121	ADVISE
A9R1950	313-1103-00			RES,FXD,FILM:10K OHM,5%,0.2W	91637	CCF50-2-10001J
A9R1951	313-1220-00			RES,FXD,FILM:22 OHM,5%,0.2W	91637	CCF50-2-22R00J
A9R1952	313-1202-00			RES,FXD,FILM:2K OHM,5%,0.2W	91637	CCF50-2-20000J
A9R1953	313-1393-00			RES,FXD,FILM:39K OHM,5%,0.2W	91637	CCF50-2-39001J
A9R1971	313-1202-00			RES,FXD,FILM:2K OHM,5%,0.2W	91637	CCF50-2-20000J
A9R1972	313-1224-00			RES,FXD,FILM:220K,5%,0.2W	91637	CCF50-2-22002J
A9R1973	313-1124-00			RES,FXD,FILM:120K OHM,5%,0.2W	91637	CCF50-2-12002J
A9R1990	321-0693-00			RES,FXD,FILM:68.1K OHM,0.5%,0.125W,TC=T0	19701	5033RD6812DB298
A9R1991	315-0107-00			RES,FXD,FILM:100M OHM,5%,0.25W	01121	CB1075
A9R1992	313-1394-00			RES,FXD,FILM:390K,5%,0.2W	91637	CCF50-2-39002J
A9R1994	321-0402-00			RES,FXD,FILM:150K OHM,1%,0.125W,TC=T0	91637	CMF55116G15002F
A9T1970	120-1418-01			XFMR,PWR,SDN&SU:HIGH VOLTAGE	75498	120-1418-01
A9U1830	152-0805-00			MODULE,HV:,;4.67KVAC IN,14KVDC OUT	51406	MSR8506
A9U1890	156-1191-01			IC,LINEAR:BIFET,OP-AMP;6MV VOS	01295	TL072ACP
A9U1956	156-0158-07			IC,LINEAR:BIPOLAR,OP-AMP	01295	MC1458P
A9VR1891	152-0282-00			DIODE,ZENER:,;30V,2%,0.4W	04713	1N972CRL
A9W900	198-4603-01			WIRE SET,ELEC:W/CRT SOCKET	0J7N9	ORDER BY DESC
A9W1909	131-0566-00			BUS,CONDUCTOR:DUMMY RES,0.094 OD X 0.225L	24546	OMA0207

Component Number	Tektronix Part No.	Serial No. Effective	Dscont	Name & Description	Mfr. Code	Mfr. Part No.
A13	307–1154–00			PASSIVE NETWORK:CRT TERMINATOR	80009	307115400

Component Number	Tektronix Part No.	Serial No. Effective	Dscont	Name & Description	Mfr. Code	Mfr. Part No.
A14	670-8000-00			CIRCUIT BD ASSY:DYNAMIC CENTERING	80009	670800000
A14C3401	281-0775-01			CAP,FXD,CER DI:0.1UF,20%,50V	04222	SA105E104MAA
A14J141	131-0608-00			TERMINAL,PIN:PRESSFIT/PCB,;MALE,STR (QUANTITY OF 5)	22526	48283-018
A14R3401	311-2234-00			RES,VAR,TRMR:CERMET;5K OHM,20%,0.5W	TK2073	GF06UT2 502 M L
A14R3402	313-1222-00			RES,FXD,FILM:2.2K OHM,5%,0.2W	91637	CCF50-2-22000J
A14R3403	313-1750-00			RES,FXD,FILM:75 OHM,5%,0.2W	91637	CCF50-2-75R00J
A14R3404	321-0284-00			RES,FXD,FILM:8.87K OHM,1%,0.125W,TC=T0	91637	CMF55116G88700F
A14R3405	313-1750-00			RES,FXD,FILM:75 OHM,5%,0.2W	91637	CCF50-2-75R00J
A14R3406	321-0299-00			RES,FXD,FILM:12.7K OHM,1%,0.125W,TC=T0	91637	CMF55116G12701F
A14R3407	311-2234-00			RES,VAR,TRMR:CERMET;5K OHM,20%,0.5W	TK2073	GF06UT2 502 M L
A14R3408	321-0284-00			RES,FXD,FILM:8.87K OHM,1%,0.125W,TC=T0	91637	CMF55116G88700F
A14R3409	313-1222-00			RES,FXD,FILM:2.2K OHM,5%,0.2W	91637	CCF50-2-22000J
A14R3410	313-1103-00			RES,FXD,FILM:10K OHM,5%,0.2W	91637	CCF50-2-10001J
A14R3411	313-1103-00			RES,FXD,FILM:10K OHM,5%,0.2W	91637	CCF50-2-10001J
A14U3401	156-0130-00			IC,MISC:BIPOLAR,MODULATOR/DEMODULATOR	27014	LM1496H
A14U3402	156-0130-00			IC,MISC:BIPOLAR,MODULATOR/DEMODULATOR	27014	LM1496H
A14VR3401	152-0227-00			DIODE,ZENER:,;6.2V,5%,0.4W	04713	1N753ARL

Component Number	Tektronix Part No.	Serial No. Effective	Dscont	Name & Description	Mfr. Code	Mfr. Part No.
C10	281-0697-00			CAP,FXD,CER DI:5000PF,+100-0%,100V	12294	1250-054
L90	119-1478-01			COIL,TUBE DEFL:FXD,TRACE ROTATION	TK1177	06244
R134	311-2174-01			RES,VAR,NONWW:5K OHM,20%,0.5W	12697	ADVISE
R351	311-2174-01			RES,VAR,NONWW:5K OHM,20%,0.5W	12697	ADVISE
R352	311-2174-01			RES,VAR,NONWW:5K OHM,20%,0.5W	12697	ADVISE
R975	311-1482-01			RES,VAR,NONWW:PNL,5K OHM,20%,0.5W	12697	W8778
R976	311-2174-01			RES,VAR,NONWW:5K OHM,20%,0.5W	12697	ADVISE
R977	311-1482-01			RES,VAR,NONWW:PNL,5K OHM,20%,0.5W	12697	W8778
V900	154-0850-01			CRT ASSEMBLY:FINISHED	80009	154085001

REPLACEABLE ELECTRICAL PARTS

PARTS ORDERING INFORMATION

Replacement parts are available from or through your local Tektronix, Inc. Field Office or representative.

Changes to Tektronix instruments are sometimes made to accommodate improved components as they become available, and to give you the benefit of the latest circuit improvements developed in our engineering department. It is therefore important, when ordering parts, to include the following information in your order: Part number, instrument type or number, serial number, and modification number if applicable.

If a part you have ordered has been replaced with a new or improved part, your local Tektronix, Inc. Field Office or representative will contact you concerning any change in part number.

Change information, if any, is located at the rear of this manual.

LIST OF ASSEMBLIES

A list of assemblies can be found at the beginning of the Electrical Parts List. The assemblies are listed in numerical order. When the complete component number of a part is known, this list will identify the assembly in which the part is located.

CROSS INDEX-MFR. CODE NUMBER TO MANUFACTURER

The Mfr. Code Number to Manufacturer index for the Electrical Parts List is located immediately after this page. The Cross Index provides codes, names and addresses of manufacturers of components listed in the Electrical Parts List.

ABBREVIATIONS

Abbreviations conform to American National Standard Y1.1.

COMPONENT NUMBER (column one of the Electrical Parts List)

A numbering method has been used to identify assemblies, subassemblies and parts. Examples of this numbering method and typical expansions are illustrated by the following:

Example a.

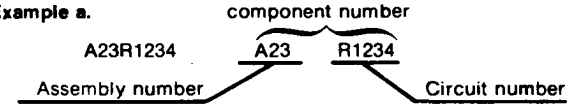

Read: Resistor 1234 of Assembly 23

Example b.

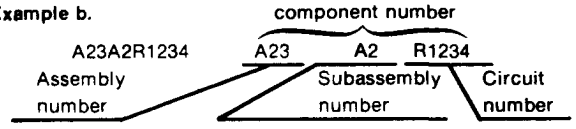

Read: Resistor 1234 of Subassembly 2 of Assembly 23

Only the circuit number will appear on the diagrams and circuit board illustrations. Each diagram and circuit board illustration is clearly marked with the assembly number. Assembly numbers are also marked on the mechanical exploded views located in the Mechanical Parts List. The component number is obtained by adding the assembly number prefix to the circuit number.

The Electrical Parts List is divided and arranged by assemblies in numerical sequence (e.g., assembly A1 with its subassemblies and parts, precedes assembly A2 with its subassemblies and parts).

Chassis-mounted parts have no assembly number prefix and are located at the end of the Electrical Parts List.

TEKTRONIX PART NO. (column two of the Electrical Parts List)

Indicates part number to be used when ordering replacement part from Tektronix.

SERIAL/MODEL NO. (columns three and four of the Electrical Parts List)

Column three (3) indicates the serial number at which the part was first used. Column four (4) indicates the serial number at which the part was removed. No serial number entered indicates part is good for all serial numbers.

NAME & DESCRIPTION (column five of the Electrical Parts List)

In the Parts List, an Item Name is separated from the description by a colon (:). Because of space limitations, an Item Name may sometimes appear as incomplete. For further Item Name identification, the U.S. Federal Cataloging Handbook H6-1 can be utilized where possible.

MFR. CODE (column six of the Electrical Parts List)

Indicates the code number of the actual manufacturer of the part. (Code to name and address cross reference can be found immediately after this page.)

MFR. PART NUMBER (column seven of the Electrical Parts List)

Indicates actual manufacturers part number.

CROSS INDEX – MFR. CODE NUMBER TO MANUFACTURER

Mfr. Code	Manufacturer	Address	City, State, Zip Code
D5243	ROEDERSTEIN E SPEZIALFABRIK FUER KONDENSATOREN GMBN	LUDMILLASTRASSE 23–25	8300 LANDSHUT GERMANY
S3774	OSHINO ELECTRIC LAMP WORKS LTD	5 2 MINAMI SHINAGAWA 2 CHORE SHINAGAWA KU	TOKYO JAPAN
TK0161	WYLE LABORATORIES ELECTRONICS MARKETING GROUP LOS ANGELES DIV	124 MARYLAND ST	EL SEGUNDO CA 90245–4115
TK0515	EVOX–RIFA INC	100 TRI–STATE INTERNATIONAL SUITE 290	LINCOLNSHIRE IL 60015
TK0753	RATEL ELECTRONICS	948 BENICIA AVENUE	SUNNYVALE CA 94086
TK1124	LUMEX OPTO/COMPONENTS INC	292 E HELLEN RD	PALATINE IL 60067–6955
TK1177	BELL INDUSTRIES (DIST)	6024 SW JEAN ROAD	LAKE OSWEGO OR 97034
TK1352	INTERFACE ELECTRONICS CORP	300 2–ND AVENUE WEST	SEATTLE WA 98119
TK1492	COFER COMPONENT PROCESSING	3270 KELLER ST UNIT 11	SANTA CLARA CA 95050
TK1547	MOORE ELECTRONICS INC (DIST)	19500 SW 90TH COURT PO BOX 1030	TUALATIN OR 97062
TK1727	PHILIPS NEDERLAND BV AFD ELONCO	POSTBUS 90050	5600 PB EINDHOVEN THE NETHERLANDS
TK1743	UNITRODE (UK) LTD	6 CRESSWELL PARK BLACKHEATH	LONDON SE 3 9RD ENGLAND
TK1864	INTERFET CORP	322 GOLD ST	GARLAND TX 75042
TK1913	WIMA THE INTER–TECHNICAL GROUP IND	ONE BRIDGE ST PO BOX 23	IRVINGTON NY 10533
TK2073	TOCOS AMERICA INC	565 W GULF ROAD	ARLINGTON HEIGHTS IL 60005
TK2292	SENSOR AND SWITCHES INC DIV OF DESCO CORP OF COLUMBUS OHIO	PO BOX 3297	LEXINGTON OH 44904
TK2319	COLLMER	14368 PROTON RD	DALLAS TX 75244
TK2424	CHAMPION TECHNOLOGIES	2553 N EDGINGTON ST	FRANKLIN PARK IL 60131
0B0A9	DALLAS SEMICONDUCTOR CORP	4350 BELTWOOD PKWY SOUTH	DALLAS TX 75244
0CVK3	ALLEGRO MICROSYSTEMS INC INTEGRATED CIRCUITS DIV	115 NE CUTOFF	WORCHESTER MA 01606
0JR03	ZMAN MAGNETICS INC	7633 S 180th	KENT WA 98032
0JR04	TOSHIBA AMERICA INC ELECTRONICS COMPONENTS DIV BUSINESS SECTOR	2692 DOW AVE	TUSTIN CA 92680
0J7N9	MCX INC	30608 SAN ANTONIO ST	HAYWARD CA 94544
0J9R5	MARCON AMERICA CORP	3 PEARL COURT	ALLENDALE NJ 07401
00779	AMP INC	2800 FULLING MILL PO BOX 3608	HARRISBURG PA 17105
01121	ALLEN–BRADLEY CO	1201 S 2ND ST	MILWAUKEE WI 53204–2410
01295	TEXAS INSTRUMENTS INC SEMICONDUCTOR GROUP	13500 N CENTRAL EXPY PO BOX 655012	DALLAS TX 75265
02113	COILCRAFT INC	1102 SILVER LAKE RD	CARY IL 60013–1658

CROSS INDEX – MFR. CODE NUMBER TO MANUFACTURER

Mfr. Code	Manufacturer	Address	City, State, Zip Code
04222	AVX CERAMICS DIV OF AVX CORP	19TH AVE SOUTH P O BOX 867	MYRTLE BEACH SC 29577
04713	MOTOROLA INC SEMICONDUCTOR PRODUCTS SECTOR	5005 E MCDOWELL RD	PHOENIX AZ 85008–4229
05292	ITT COMPONENTS DIV		CLIFTON NJ
05828	GENERAL INSTRUMENT CORP GOVERNMENT SYSTEMS DIV	600 W JOHN ST	HICKSVILLE NY 11802
07716	TRW INC TRW IRC FIXED RESISTORS/BURLINGTON	2850 MT PLEASANT AVE	BURLINGTON IA 52601
09353	C AND K COMPONENTS INC	15 RIVERDALE AVE	NEWTON MA 02158–1057
09922	BURNDY CORP	RICHARDS AVE	NORWALK CT 06852
09969	DALE ELECTRONICS INC	EAST HIGHWAY 50 P O BOX 180	YANKTON SD 57078
1W344	UNITED CHEMI–CON INC	9801 W HIGGINS SUITE 430	ROSEMONT IL 60018–4704
11236	CTS CORP BERNE DIV THICK FILM PRODUCTS GROUP	406 PARR ROAD	BERNE IN 46711–9506
12294	MURATA ERIE NORTH AMERICA INC DIV OF MURATA ERIE	5 FRASER AVE	TRENTON ONT CAN K8V 5S1
12697	CLAROSTAT MFG CO INC	LOWER WASHINGTON ST	DOVER NH 03820
12954	MICROSEMI CORP – SCOTTSDALE	8700 E THOMAS RD P O BOX 1390	SCOTTSDALE AZ 85252
14301	ANDERSON ELECTRONICS INC	310 PENN ST PO BOX 89	HOLLIDAYSBURG PA 16648–2009
14552	MICROSEMI CORP	2830 S FAIRVIEW ST	SANTA ANA CA 92704–5948
14936	GENERAL INSTRUMENT CORP DISCRETE SEMI CONDUCTOR DIV	600 W JOHN ST	HICKSVILLE NY 11802
15454	KETEMA RODAN DIVISION	2900 BLUE STAR STREET	ANAHEIM CA 92806–2591
18324	SIGNETICS CORP MILITARY PRODUCTS DIV	4130 S MARKET COURT	SACRAMENTO CA 95834–1222
18796	MURATA ERIE NORTH AMERICAN INC STATE COLLEGE OPERATIONS	1900 W COLLEGE AVE	STATE COLLEGE PA 16801–2723
19701	PHILIPS COMPONENTS DISCRETE PRODUCTS DIV RESISTIVE PRODUCTS FACILITY AIRPORT ROAD	PO BOX 760	MINERAL WELLS TX 76067–0760
2N936	VISHAY SPRAGUE INC	678 MAIN STREET RT 109	SANFORD ME 04073
20462	PREM MAGNETICS INC	3519 N CHAPEL HILL	MCHENRY IL 60050–2504
22526	DU PONT E I DE NEMOURS AND CO INC DU PONT ELECTRONICS DEPT	515 FISHING CREEK RD	NEW CUMBERLAND PA 17070–3007
24165	SPRAGUE ELECTRIC CO	267 LOWELL ROAD	HUDSON NH 03051
24355	ANALOG DEVICES INC	RT 1 INDUSTRIAL PK PO BOX 9106	NORWOOD MA 02062

CROSS INDEX – MFR. CODE NUMBER TO MANUFACTURER

Mfr. Code	Manufacturer	Address	City, State, Zip Code
24546	BRADFORD ELECTRONICS	550 HIGH ST	BRADFORD PA 16701–3737
25088	SIEMENS CORP	186 WOOD AVE S	ISELIN NJ 08830–2704
27014	NATIONAL SEMICONDUCTOR CORP	2900 SEMICONDUCTOR DR	SANTA CLARA CA 95051–0606
27264	MOLEX INC	2222 WELLINGTON COURT	LISLE IL 60532–1613
31471	AMERICAN MICRO SYSTEMS INC	3800 HOMESTEAD RD	SANTA CLARA CA 95051–4542
31745	ROGERS CORP FLEXIBLE CIRCUITS DIV	WILLIAMS FIELD AND DOBSON RD PO BOX 4000	CHANDLER AZ 85224
31918	ITT SCHADOW INC	8081 WALLACE RD	EDEN PRAIRIE MN 55344–2224
32997	BOURNS INC TRIMPOT DIV	1200 COLUMBIA AVE	RIVERSIDE CA 92507–2114
34335	ADVANCED MICRO DEVICES	901 THOMPSON PL	SUNNYVALE CA 94086–4518
34649	INTEL CORP SALES OFFICE /ST4–2/	3065 BOWERS AVE	SANTA CLARA CA 95051
34899	FAIR–RITE PRODUCTS CORP	1 COMMERCIAL ROW	WALLKILL NY 12589
50088	SGS–THOMSON MICROELECTRONICS INC	1310 ELECTRONICS DR	CARROLLTON TX 75006–6905
50434	HEWLETT–PACKARD CO OPTOELECTRONICS DIV	370 W TRIMBLE RD	SAN JOSE CA 95131
51406	MURATA ERIE NORTH AMERICA INC HEADQUARTERS AND GEORGIA OPERATIONS	2200 LAKE PARK DR	SMYRNA GA 30080
52769	SPRAGUE–GOODMAN ELECTRONICS INC	134 FULTON AVE	GARDEN CITY PARK NY 11040–5352
53387	MINNESOTA MINING MFG CO	PO BOX 2963	AUSTIN TX 78769–2963
54937	DEYOUNG MANUFACTURING INC	12920 NE 125TH WAY	KIRKLAND WA 98034–7716
55680	NICHICON /AMERICA/ CORP	927 E STATE PKY	SCHAUMBURG IL 60195–4526
56637	RCD COMPONENTS INC	520 E INDUSTRIAL PARK DR	MANCHESTER NH 03103
56845	DALE ELECTRONICS INC	2300 RIVERSIDE BLVD PO BOX 74	NORFOLK NE 68701–2242
57668	ROHM CORP	8 WHATNEY PO BOX 19515	IRVINE CA 92713
58050	TEKA PRODUCTS INC	45 SALEM ST	PROVIDENCE RI 02907
59660	TUSONIX INC	7741 N BUSINESS PARK DR PO BOX 37144	TUCSON AZ 85740–7144
60705	CERA–MITE CORPORATION	1327 6TH AVE	GRAFTON WI 53024–1831
61271	FUJITSU MICROELECTRONICS INC	2985 KIFER RD	SANTA CLARA CA 95051–0802
61857	SAN–0 INDUSTRIAL CORP	85 ORVILLE DR PO BOX 511	BOHEMIA LONG ISLAND NY 11716–2501
62786	HITACHI AMERICA LTD	1800 BERING DRIVE	SAN JOSE CA 95122
64537	KDI ELECTRONICS INC SUBSIDIARY OF KDI CORP	31 FARINELLA DR	EAST HANOVER NJ 07936
66891	BKC INTERNATIONAL ELECTRONIC INC	6 LAKE ST PO BOX 1436	LAWRENCE MA 01841–3011
7W718	MARQUARDT SWITCHES INC	2711 ROUTH 20 EAST	CAZENOVIA NY 13035–1219

CROSS INDEX – MFR. CODE NUMBER TO MANUFACTURER

Mfr. Code	Manufacturer	Address	City, State, Zip Code
71400	BUSSMANN DIV OF COOPER INDUSTRIES INC	114 OLD STATE RD PO BOX 14460	ST LOUIS MO 63178
71590	CRL COMPONENTS INC	HWY 20 W PO BOX 858	FORT DODGE IA 50501
73138	BECKMAN INDUSTRIAL CORP BECKMAN ELECTRONIC TECHNOLOGIES SUB OF EMERSON ELECTRIC	4141 PALM ST	FULLERTON CA 92635
75042	IRC ELECTRONIC COMPONENTS PHILADELPHIA DIV TRW FIXED RESISTORS	401 N BROAD ST	PHILADELPHIA PA 19108–1001
75498	MULTICOMP INC	3005 SW 154TH TERRACE #3	BEAVERTON OR 97006
76854	OAK/GRIGSBY AN OAK INDUSTRIES INC CO	88 N DUGAN ROAD PO BOX 890	SUGAR GROVE IL 60544–0890
80009	TEKTRONIX INC	14150 SW KARL BRAUN DR PO BOX 500	BEAVERTON OR 97077–0001
81483	INTERNATIONAL RECTIFIER	9220 SUNSET BLVD	LOS ANGELES CA 90069–3501
81855	EAGLE–PICHER INDUSTRIES INC ELECTRONICS DIV	COUPLES DEPT C AND PORTER STS PO BOX 47	JOPLIN MO 64801
83701	ELECTRONIC DEVICES INC	21 GREY OAKS AVE	YONKERS NY 10710–3205
84411	AMERICAN SHIZUKI CORP OGALLALA OPERATIONS	301 WEST O ST	OGALLALA NE 69153–1844
91637	DALE ELECTRONICS INC	2064 12TH AVE PO BOX 609	COLUMBUS NE 68601–3632

Component Number	Tektronix Part No.	Serial No. Effective	Dscont	Name & Description	Mfr. Code	Mfr. Part No.
A1	671-0722-01	B010100	B010574	CIRCUIT BD ASSY:MAIN	80009	671072201
A1	671-0722-06	B010575	B010808	CIRCUIT BD ASSY:MAIN	80009	671072206
A1	671-0722-08	B010809	B010884	CIRCUIT BD ASSY:MAIN	80009	671072208
A1	671-0722-11	B010885		CIRCUIT BD ASSY:MAIN (STANDARD ONLY)	80009	671072211
A1	671-0722-08	B050000	B050363	CIRCUIT BD ASSY:MAIN	80009	671072208
A1	671-0722-11	B050364		CIRCUIT BD ASSY:MAIN (STANDARD ONLY)	80009	671072211
A1	671-0722-09			CIRCUIT BD ASSY:MAIN (OPTION 5H ONLY)	80009	671072209
A2	672-1037-13	B010100	B010895	CIRCUIT BD ASSY:LV PWR SPLY MODULE	80009	672103713
A2	672-1037-15	B010896	B051001	CIRCUIT BD ASSY:LV PWR SPLY MODULE	80009	672103715
A2	672-1037-16	B051002		CIRCUIT BD ASSY:LV PWR SPLY MODULE	80009	672103716
A2A1	--------			CIRCUIT BD ASSY:REGULATOR (AVAILABLE AT THE 672-1037-XX LEVEL ONLY)		
A3	--------			CIRCUIT BD ASSY:INVERTER (AVAILABLE AT THE 672-1037-XX LEVEL ONLY)		
A4	670-9493-02	B010100	B049999	CIRCUIT BD ASSY:READOUT	80009	670949302
A5	670-9052-02	B010100	B049999	CIRCUIT BD ASSY:DIGITAL CONTROL	80009	670905202
A5	671-0965-00	B050000	B050330	CIRCUIT BD ASSY:CONTROL/READOUT/BUFFER	80009	671096500
A5	671-0965-01	B050331	B050436	CIRCUIT BD ASSY:CONTROL/READOUT/BUFFER	80009	671096501
A5	671-0965-02	B050437	B050615	CIRCUIT BD ASSY:CONTROL/READOUT/BUFFER	80009	671096502
A5	671-0965-04	B050616	B051040	CIRCUIT BD ASSY:CONTROL/READOUT/BUFFER	80009	671096504
A5	671-0965-05	B051041		CIRCUIT BD ASSY:CONTROL/READOUT/BUFFER	80009	671096505
A6	614-0825-00			FRONT PNL ASSY:STANDARD (STANDARD)	80009	614082500
A6	614-0826-00			FRONT PNL ASSY:TV OPTION (OPTION 05)	80009	614082600
A6	614-0879-00			FR PANEL ASSY: (OPTION 5H ONLY)	80009	614087900
A6A1	670-9236-01			CIRCUIT BD ASSY:FRONT PANEL	80009	670923601
A8	670-7280-00			CIRCUIT BD ASSY:SCALE ILLUM	80009	670728000
A9	670-9217-05			CIRCUIT BD ASSY:HV PWR SPLY	80009	670921705
A13	307-1154-00			PASSIVE NETWORK:CRT TERMINATOR	80009	307115400
A15	670-9670-00	B010100	B010574	CIRCUIT BD ASSY:HOLDOFF COMPARATOR	80009	670967000
A15	671-1058-00	B010575	B050347	CIRCUIT BD ASSY:HOLDOFF COMPARATOR	80009	671105800
A15	671-1058-01	B050348		CIRCUIT BD ASSY:HOLDOFF COMPARATOR	80009	671105801

Component Number	Tektronix Part No.	Serial No. Effective	Dscont	Name & Description	Mfr. Code	Mfr. Part No.
A1	671-0722-01	B010100	B010574	CIRCUIT BD ASSY:MAIN	80009	671072201
A1	671-0722-06	B010575	B010808	CIRCUIT BD ASSY:MAIN	80009	671072206
A1	671-0722-08	B010809	B010884	CIRCUIT BD ASSY:MAIN	80009	671072208
A1	671-0722-11	B010885		CIRCUIT BD ASSY:MAIN (STANDARD ONLY)	80009	671072211
A1	671-0722-08	B050000	B050363	CIRCUIT BD ASSY:MAIN	80009	671072208
A1	671-0722-11	B050364		CIRCUIT BD ASSY:MAIN (STANDARD ONLY)	80009	671072211
A1	671-0722-09			CIRCUIT BD ASSY:MAIN (OPTION 5H ONLY)	80009	671072209
A1A11	119-2342-05	B010100	B010341	ATTENUATOR,VAR:PROGRAMMABLE	80009	119234205
A1A11	119-2342-07	B010342	B050181	ATTENUATOR,VAR:1X-100X,CHANNEL 1	80009	119234207
A1A11	119-2342-09	B050182		ATTENUATOR,VAR:1X-100X,CHANNEL 1	80009	119234209
A1A12	119-2342-06	B010100	B010341	ATTENUATOR,VAR:PROGRAMMABLE	80009	119234206
A1A12	119-2342-08	B010342	B050181	ATTENUATOR,VAR:1X-100X,CHANNEL 2	80009	119234208
A1A12	119-2342-10	B050182		ATTENUATOR,VAR:1X-100X,CHANNEL 2	80009	119234210
A1C100	283-0000-00			CAP,FXD,CER DI:0.001UF,+100-0%,500V	51406	DD06450Y5U102P5
A1C102	290-0973-00			CAP,FXD,ELCTLT:100UF,20%,25VDC	0J9R5	CEUSM1E101
A1C103	281-0812-00			CAP,FXD,CER DI:1000PF,10%,100V	04222	SA101C102KAA
A1C105	281-0064-00			CAP,VAR,PLASTIC:0.25-1.5PF,600V	52769	ER-530-013
A1C106	281-0775-01			CAP,FXD,CER DI:0.1UF,20%,50V	04222	SA105E104MAA
A1C107	290-0943-02			CAP,FXD,ELCTLT:47UF,20%,25V	1W344	SME25VB47RM5X11
A1C108	281-0775-01			CAP,FXD,CER DI:0.1UF,20%,50V	04222	SA105E104MAA
A1C109	281-0909-00			CAP,FXD,CER DI:0.022UF,20%,50V	04222	SA105C223MAA
A1C110	281-0909-00			CAP,FXD,CER DI:0.022UF,20%,50V	04222	SA105C223MAA
A1C113	281-0909-00			CAP,FXD,CER DI:0.022UF,20%,50V	04222	SA105C223MAA
A1C114	290-0943-02			CAP,FXD,ELCTLT:47UF,20%,25V	1W344	SME25VB47RM5X11
A1C115	281-0761-00			CAP,FXD,CER DI:27PF,5%,100V	04222	SA102A270JAA
A1C116	281-0814-00			CAP,FXD,CER DI:100 PF,10%,100V	TK1743	CGB101KEN
A1C117	281-0775-01			CAP,FXD,CER DI:0.1UF,20%,50V	04222	SA105E104MAA
A1C118	281-0205-00			CAP,VAR,PLASTIC:5.5-65 PF,100V	TK1727	2222-808-32659
A1C119	281-0909-00			CAP,FXD,CER DI:0.022UF,20%,50V	04222	SA105C223MAA
A1C120	281-0909-00			CAP,FXD,CER DI:0.022UF,20%,50V	04222	SA105C223MAA
A1C121	290-0943-02			CAP,FXD,ELCTLT:47UF,20%,25V	1W344	SME25VB47RM5X11
A1C125	281-0775-01			CAP,FXD,CER DI:0.1UF,20%,50V	04222	SA105E104MAA
A1C130	290-0776-01			CAP,FXD,ELCTLT:22UF,20%,10WVDC	55680	UVX1A220MAA1TD
A1C152	290-0943-02			CAP,FXD,ELCTLT:47UF,20%,25V	1W344	SME25VB47RM5X11
A1C154	281-0812-00			CAP,FXD,CER DI:1000PF,10%,100V	04222	SA101C102KAA
A1C175	285-1301-01			CAP,FXD,MTLZD:0.47UF,10%,50V	TK1913	MKS 2 .47/50
A1C176	285-1348-00			CAP,FXD,MTLZD:0.22UF,10%,63V	TK1913	MKS2 0.22 MFD 1
A1C177	285-1348-00			CAP,FXD,MTLZD:0.22UF,10%,63V	TK1913	MKS2 0.22 MFD 1
A1C179	285-1301-01			CAP,FXD,MTLZD:0.47UF,10%,50V	TK1913	MKS 2 .47/50

Component Number	Tektronix Part No.	Serial No. Effective	Dscont	Name & Description	Mfr. Code	Mfr. Part No.
A1C180	285-1301-01			CAP,FXD,MTLZD:0.47UF,10%,50V	TK1913	MKS 2 .47/50
A1C181	285-1348-00			CAP,FXD,MTLZD:0.22UF,10%,63V	TK1913	MKS2 0.22 MFD 1
A1C182	285-1348-00			CAP,FXD,MTLZD:0.22UF,10%,63V	TK1913	MKS2 0.22 MFD 1
A1C183	285-1348-00			CAP,FXD,MTLZD:0.22UF,10%,63V	TK1913	MKS2 0.22 MFD 1
A1C184	281-0775-01			CAP,FXD,CER DI:0.1UF,20%,50V	04222	SA105E104MAA
A1C185	290-0943-02			CAP,FXD,ELCTLT:47UF,20%,25V	1W344	SME25VB47RM5X11
A1C200	283-0000-00			CAP,FXD,CER DI:0.001UF,+100-0%,500V	51406	DD06450Y5U102P5
A1C202	281-0812-00			CAP,FXD,CER DI:1000PF,10%,100V	04222	SA101C102KAA
A1C203	281-0773-00			CAP,FXD,CER DI:0.01UF,10%,100V	TK1743	CGB103KEX
A1C205	281-0064-00			CAP,VAR,PLASTIC:0.25-1.5PF,600V	52769	ER-530-013
A1C207	281-0909-00			CAP,FXD,CER DI:0.022UF,20%,50V	04222	SA105C223MAA
A1C209	281-0909-00			CAP,FXD,CER DI:0.022UF,20%,50V	04222	SA105C223MAA
A1C210	281-0909-00			CAP,FXD,CER DI:0.022UF,20%,50V	04222	SA105C223MAA
A1C211	281-0909-00			CAP,FXD,CER DI:0.022UF,20%,50V	04222	SA105C223MAA
A1C217	281-0775-01			CAP,FXD,CER DI:0.1UF,20%,50V	04222	SA105E104MAA
A1C218	290-0943-02			CAP,FXD,ELCTLT:47UF,20%,25V	1W344	SME25VB47RM5X11
A1C219	281-0775-01			CAP,FXD,CER DI:0.1UF,20%,50V	04222	SA105E104MAA
A1C220	281-0775-01			CAP,FXD,CER DI:0.1UF,20%,50V	04222	SA105E104MAA
A1C221	290-0943-02			CAP,FXD,ELCTLT:47UF,20%,25V	1W344	SME25VB47RM5X11
A1C223	281-0812-00			CAP,FXD,CER DI:1000PF,10%,100V	04222	SA101C102KAA
A1C225	281-0775-01			CAP,FXD,CER DI:0.1UF,20%,50V	04222	SA105E104MAA
A1C301	281-0775-01			CAP,FXD,CER DI:0.1UF,20%,50V	04222	SA105E104MAA
A1C302	281-0775-01			CAP,FXD,CER DI:0.1UF,20%,50V	04222	SA105E104MAA
A1C307	290-0943-02			CAP,FXD,ELCTLT:47UF,20%,25V	1W344	SME25VB47RM5X11
A1C310	281-0909-00			CAP,FXD,CER DI:0.022UF,20%,50V	04222	SA105C223MAA
A1C311	281-0909-00			CAP,FXD,CER DI:0.022UF,20%,50V	04222	SA105C223MAA
A1C325	290-0943-02			CAP,FXD,ELCTLT:47UF,20%,25V	1W344	SME25VB47RM5X11
A1C329	281-0773-00			CAP,FXD,CER DI:0.01UF,10%,100V	TK1743	CGB103KEX
A1C332	281-0773-00			CAP,FXD,CER DI:0.01UF,10%,100V	TK1743	CGB103KEX
A1C336	290-0943-02			CAP,FXD,ELCTLT:47UF,20%,25V	1W344	SME25VB47RM5X11
A1C351	281-0909-00			CAP,FXD,CER DI:0.022UF,20%,50V	04222	SA105C223MAA
A1C402	281-0762-00			CAP,FXD,CER DI:27PF,20%,100V	04222	SA102A270MAA
A1C403	281-0221-00			CAP,VAR,CER DI:2-10PF,100V	59660	513-016 A 2.0-1
A1C404	281-0221-00			CAP,VAR,CER DI:2-10PF,100V	59660	513-016 A 2.0-1
A1C412	281-0762-00			CAP,FXD,CER DI:27PF,20%,100V	04222	SA102A270MAA
A1C415	281-0909-00			CAP,FXD,CER DI:0.022UF,20%,50V	04222	SA105C223MAA
A1C458	281-0909-00			CAP,FXD,CER DI:0.022UF,20%,50V	04222	SA105C223MAA
A1C460	281-0909-00			CAP,FXD,CER DI:0.022UF,20%,50V	04222	SA105C223MAA
A1C464	281-0763-00			CAP,FXD,CER DI:47PF,10%,100V	04222	SA102A470KAA
A1C466	281-0763-00			CAP,FXD,CER DI:47PF,10%,100V	04222	SA102A470KAA

Component Number	Tektronix Part No.	Serial No. Effective	Dscont	Name & Description	Mfr. Code	Mfr. Part No.
A1C478	281-0759-00			CAP,FXD,CER DI:22PF,10%,100V	04222	SA102A220KAA
A1C480	281-0775-01			CAP,FXD,CER DI:0.1UF,20%,50V	04222	SA105E104MAA
A1C487	281-0823-00			CAP,FXD,CER DI:470PF,10%,50V	04222	SA101A471KAA
A1C488	281-0814-00			CAP,FXD,CER DI:100 PF,10%,100V	TK1743	CGB101KEN
A1C500	281-0909-00			CAP,FXD,CER DI:0.022UF,20%,50V	04222	SA105C223MAA
A1C501	281-0909-00			CAP,FXD,CER DI:0.022UF,20%,50V	04222	SA105C223MAA
A1C511	281-0759-00	B050557		CAP,FXD,CER DI:22PF,10%,100V	04222	SA102A220KAA
A1C512	290-0246-00			CAP,FXD,ELCTLT:3.3UF,10%,15V	12954	D3R3EA15K1
A1C513	285-1301-01			CAP,FXD,MTLZD:0.47UF,10%,50V	TK1913	MKS 2 .47/50
A1C520	281-0814-00	B010100	B010819	CAP,FXD,CER DI:100 PF,10%,100V	TK1743	CGB101KEN
A1C520	281-0777-00	B010820		CAP,FXD,CER DI:51PF,5%,100V	04222	SA102A510JAA
A1C520	281-0814-00	B050000	B050174	CAP,FXD,CER DI:100 PF,10%,100V	TK1743	CGB101KEN
A1C520	281-0777-00	B050175		CAP,FXD,CER DI:51PF,5%,100V	04222	SA102A510JAA
A1C521	281-0909-00			CAP,FXD,CER DI:0.022UF,20%,50V	04222	SA105C223MAA
A1C528	281-0775-01			CAP,FXD,CER DI:0.1UF,20%,50V	04222	SA105E104MAA
A1C536	290-0246-00			CAP,FXD,ELCTLT:3.3UF,10%,15V	12954	D3R3EA15K1
A1C537	281-0812-00			CAP,FXD,CER DI:1000PF,10%,100V	04222	SA101C102KAA
A1C544	281-0814-00	B010100	B010819	CAP,FXD,CER DI:100 PF,10%,100V	TK1743	CGB101KEN
A1C544	281-0777-00	B010820		CAP,FXD,CER DI:51PF,5%,100V	04222	SA102A510JAA
A1C544	281-0814-00	B050000	B050174	CAP,FXD,CER DI:100 PF,10%,100V	TK1743	CGB101KEN
A1C544	281-0777-00	B050175		CAP,FXD,CER DI:51PF,5%,100V	04222	SA102A510JAA
A1C601	281-0270-00			CAP,VAR,CER DI:9-90PF,50V	52769	GKG90012
A1C617	281-0773-00			CAP,FXD,CER DI:0.01UF,10%,100V	TK1743	CGB103KEX
A1C625	281-0909-00			CAP,FXD,CER DI:0.022UF,20%,50V	04222	SA105C223MAA
A1C645	281-0773-00			CAP,FXD,CER DI:0.01UF,10%,100V	TK1743	CGB103KEX
A1C650	281-0823-00			CAP,FXD,CER DI:470PF,10%,50V	04222	SA101A471KAA
A1C653	281-0811-00			CAP,FXD,CER DI:10PF,10%,100V	04222	SA102A100KAA
A1C660	281-0851-00	B010100	B010574	CAP,FXD,CER DI:180PF,5%,100VDC	04222	SA101A181JAA
A1C660	281-0863-00	B010575		CAP,FXD,CER DI:240PF,5%,100V	04222	SA101A241JAA
A1C669	281-0775-01			CAP,FXD,CER DI:0.1UF,20%,50V	04222	SA105E104MAA
A1C675	281-0775-01			CAP,FXD,CER DI:0.1UF,20%,50V	04222	SA105E104MAA
A1C678	281-0791-00	B010885		CAP,FXD,CER DI:270PF,10%,100V	04222	SA102C271KAA
A1C678	281-0791-00	B050364		CAP,FXD,CER DI:270PF,10%,100V	04222	SA102C271KAA
A1C707	281-0808-00			CAP,FXD,CER DI:7 PF,20%,100V	04222	SA102A7RODAA
A1C708	285-0676-01			CAP,FXD,PLASTIC:0.1UF,3,5%,35V	75498	285-0676-01
A1C709	285-1060-00			CAP,FXD,PLASTIC:10UF,3%,25V	75498	285-1060-00
A1C710	281-0775-01			CAP,FXD,CER DI:0.1UF,20%,50V	04222	SA105E104MAA
A1C712	285-1301-01			CAP,FXD,MTLZD:0.47UF,10%,50V	TK1913	MKS 2 .47/50
A1C722	281-0909-00			CAP,FXD,CER DI:0.022UF,20%,50V	04222	SA105C223MAA
A1C723	290-0943-02			CAP,FXD,ELCTLT:47UF,20%,25V	1W344	SME25VB47RM5X11

Component Number	Tektronix Part No.	Serial No. Effective	Dscont	Name & Description	Mfr. Code	Mfr. Part No.
A1C730	281-0909-00			CAP,FXD,CER DI:0.022UF,20%,50V	04222	SA105C223MAA
A1C731	290-0944-01			CAP,FXD,ELCTLT:220UF,20%,10V	0J9R5	CEBSM1C221M-T4
A1C732	290-0944-01			CAP,FXD,ELCTLT:220UF,20%,10V	0J9R5	CEBSM1C221M-T4
A1C733	290-0943-02			CAP,FXD,ELCTLT:47UF,20%,25V	1W344	SME25VB47RM5X11
A1C735	281-0823-00			CAP,FXD,CER DI:470PF,10%,50V	04222	SA101A471KAA
A1C738	290-0943-02			CAP,FXD,ELCTLT:47UF,20%,25V	1W344	SME25VB47RM5X11
A1C740	290-0943-02			CAP,FXD,ELCTLT:47UF,20%,25V	1W344	SME25VB47RM5X11
A1C742	281-0812-00			CAP,FXD,CER DI:1000PF,10%,100V	04222	SA101C102KAA
A1C744	281-0775-01			CAP,FXD,CER DI:0.1UF,20%,50V	04222	SA105E104MAA
A1C755	281-0759-00			CAP,FXD,CER DI:22PF,10%,100V	04222	SA102A220KAA
A1C803	281-0909-00			CAP,FXD,CER DI:0.022UF,20%,50V	04222	SA105C223MAA
A1C804	281-0811-00			CAP,FXD,CER DI:10PF,10%,100V	04222	SA102A100KAA
A1C805	281-0823-00			CAP,FXD,CER DI:470PF,10%,50V	04222	SA101A471KAA
A1C806	283-0156-00			CAP,FXD,CER DI:1000PF,+80-20%,200V	04222	SR152E102ZAA
A1C808	281-0757-00			CAP,FXD,CER DI:10PF,20%,100V	04222	SA102A100MAA
A1C809	281-0819-00			CAP,FXD,CER DI:33 PF,5%,50V	04222	SA102A330JAA
A1C810	281-0909-00			CAP,FXD,CER DI:0.022UF,20%,50V	04222	SA105C223MAA
A1C811	281-0909-00			CAP,FXD,CER DI:0.022UF,20%,50V	04222	SA105C223MAA
A1C817	281-0812-00			CAP,FXD,CER DI:1000PF,10%,100V	04222	SA101C102KAA
A1C819	281-0909-00			CAP,FXD,CER DI:0.022UF,20%,50V	04222	SA105C223MAA
A1C822	281-0775-01			CAP,FXD,CER DI:0.1UF,20%,50V	04222	SA105E104MAA
A1C823	281-0909-00			CAP,FXD,CER DI:0.022UF,20%,50V	04222	SA105C223MAA
A1C830	281-0814-00			CAP,FXD,CER DI:100 PF,10%,100V	TK1743	CGB101KEN
A1C848	281-0909-00			CAP,FXD,CER DI:0.022UF,20%,50V	04222	SA105C223MAA
A1C849	281-0775-01			CAP,FXD,CER DI:0.1UF,20%,50V	04222	SA105E104MAA
A1C850	281-0909-00			CAP,FXD,CER DI:0.022UF,20%,50V	04222	SA105C223MAA
A1C851	285-1301-01			CAP,FXD,MTLZD:0.47UF,10%,50V	TK1913	MKS 2 .47/50
A1C852	285-1301-01			CAP,FXD,MTLZD:0.47UF,10%,50V	TK1913	MKS 2 .47/50
A1C853	285-1301-01			CAP,FXD,MTLZD:0.47UF,10%,50V	TK1913	MKS 2 .47/50
A1C854	285-1301-01			CAP,FXD,MTLZD:0.47UF,10%,50V	TK1913	MKS 2 .47/50
A1C900	281-0763-00			CAP,FXD,CER DI:47PF,10%,100V	04222	SA102A470KAA
A1C903	281-0909-00			CAP,FXD,CER DI:0.022UF,20%,50V	04222	SA105C223MAA
A1C907	281-0808-00			CAP,FXD,CER DI:7 PF,20%,100V	04222	SA102A7RODAA
A1C908	285-0752-03			CAP,FXD,PLASTIC:1UF,3%,50V	75498	ORDER BY DESC
A1C912	281-0909-00			CAP,FXD,CER DI:0.022UF,20%,50V	04222	SA105C223MAA
A1C933	281-0909-00			CAP,FXD,CER DI:0.022UF,20%,50V	04222	SA105C223MAA
A1C938	281-0909-00			CAP,FXD,CER DI:0.022UF,20%,50V	04222	SA105C223MAA
A1C940	281-0909-00			CAP,FXD,CER DI:0.022UF,20%,50V	04222	SA105C223MAA
A1C943	281-0909-00			CAP,FXD,CER DI:0.022UF,20%,50V	04222	SA105C223MAA
A1C947	281-0759-00			CAP,FXD,CER DI:22PF,10%,100V	04222	SA102A220KAA

Component Number	Tektronix Part No.	Serial No. Effective	Dscont	Name & Description	Mfr. Code	Mfr. Part No.
A1C957	290-0804-00			CAP,FXD,ELCTLT:10UF,+50-20%,25V	0J9R5	CEUSM1E100
A1C958	281-0909-00			CAP,FXD,CER DI:0.022UF,20%,50V	04222	SA105C223MAA
A1C966	281-0783-00	B010100	B050255	CAP,FXD,CER DI:0.1 UF 20%,100V	04222	SA301E104MAA
A1C966	285-1356-00	B050256		CAP,FXD,PLASTIC:0.047UF,20%,250V	84411	X665 473M250
A1C967	281-0783-00	B010100	B050255	CAP,FXD,CER DI:0.1 UF 20%,100V	04222	SA301E104MAA
A1C967	285-1356-00	B050256		CAP,FXD,PLASTIC:0.047UF,20%,250V	84411	X665 473M250
A1C972	281-0756-00			CAP,FXD,CER DI:2.2PF,+/-0.5PF,200V	04222	SA102A2R2DAA
A1C973	281-0909-00			CAP,FXD,CER DI:0.022UF,20%,50V	04222	SA105C223MAA
A1C975	281-0775-01			CAP,FXD,CER DI:0.1UF,20%,50V	04222	SA105E104MAA
A1C976	283-1001-00			CAP,FXD,CER DI:0.03UF,50VDC	31745	1ROGUQ15A
A1C977	290-0246-00			CAP,FXD,ELCTLT:3.3UF,10%,15V	12954	D3R3EA15K1
A1C980	281-0909-00			CAP,FXD,CER DI:0.022UF,20%,50V	04222	SA105C223MAA
A1C981	283-1000-00			CAP,FXD,CER DI:0.02UF,50VDC	31745	1ROGUQO1A
A1C982	281-0759-00			CAP,FXD,CER DI:22PF,10%,100V	04222	SA102A220KAA
A1C985	281-0775-01			CAP,FXD,CER DI:0.1UF,20%,50V	04222	SA105E104MAA
A1C988	281-0909-00			CAP,FXD,CER DI:0.022UF,20%,50V	04222	SA105C223MAA
A1C990	281-0909-00			CAP,FXD,CER DI:0.022UF,20%,50V	04222	SA105C223MAA
A1C995	281-0810-00			CAP,FXD,CER DI:5.6PF,+/-0.5PF,100V	04222	SA102A5R6DAA
A1CR100	152-0323-01			DIODE,SIG:,;50V,1.25VF,225MA,25PA,2.0PF	14552	MT5127
A1CR101	152-0323-01			DIODE,SIG:,;50V,1.25VF,225MA,25PA,2.0PF	14552	MT5127
A1CR107	152-0066-00			DIODE,RECT:,;400V,1A,IFSM=30A	05828	GP10G-020
A1CR130	152-0141-02			DIODE,SIG:,ULTRA FAST;40V,150MA,4NS,2PF	27014	FDH9427
A1CR131	152-0141-02			DIODE,SIG:,ULTRA FAST;40V,150MA,4NS,2PF	27014	FDH9427
A1CR140	152-0141-02			DIODE,SIG:,ULTRA FAST;40V,150MA,4NS,2PF	27014	FDH9427
A1CR141	152-0141-02			DIODE,SIG:,ULTRA FAST;40V,150MA,4NS,2PF	27014	FDH9427
A1CR142	152-0141-02			DIODE,SIG:,ULTRA FAST;40V,150MA,4NS,2PF	27014	FDH9427
A1CR143	152-0141-02			DIODE,SIG:,ULTRA FAST;40V,150MA,4NS,2PF	27014	FDH9427
A1CR144	152-0141-02			DIODE,SIG:,ULTRA FAST;40V,150MA,4NS,2PF	27014	FDH9427
A1CR145	152-0141-02			DIODE,SIG:,ULTRA FAST;40V,150MA,4NS,2PF	27014	FDH9427
A1CR146	152-0141-02			DIODE,SIG:,ULTRA FAST;40V,150MA,4NS,2PF	27014	FDH9427
A1CR147	152-0141-02			DIODE,SIG:,ULTRA FAST;40V,150MA,4NS,2PF	27014	FDH9427
A1CR148	152-0141-02			DIODE,SIG:,ULTRA FAST;40V,150MA,4NS,2PF	27014	FDH9427
A1CR149	152-0141-02			DIODE,SIG:,ULTRA FAST;40V,150MA,4NS,2PF	27014	FDH9427
A1CR150	152-0141-02			DIODE,SIG:,ULTRA FAST;40V,150MA,4NS,2PF	27014	FDH9427
A1CR151	152-0141-02			DIODE,SIG:,ULTRA FAST;40V,150MA,4NS,2PF	27014	FDH9427
A1CR152	152-0141-02			DIODE,SIG:,ULTRA FAST;40V,150MA,4NS,2PF	27014	FDH9427
A1CR153	152-0141-02			DIODE,SIG:,ULTRA FAST;40V,150MA,4NS,2PF	27014	FDH9427
A1CR154	152-0141-02			DIODE,SIG:,ULTRA FAST;40V,150MA,4NS,2PF	27014	FDH9427
A1CR155	152-0141-02			DIODE,SIG:,ULTRA FAST;40V,150MA,4NS,2PF	27014	FDH9427
A1CR161	152-0141-02			DIODE,SIG:,ULTRA FAST;40V,150MA,4NS,2PF	27014	FDH9427

Component Number	Tektronix Part No.	Serial No. Effective	Dscont	Name & Description	Mfr. Code	Mfr. Part No.
A1CR162	152-0141-02			DIODE,SIG:,ULTRA FAST;40V,150MA,4NS,2PF	27014	FDH9427
A1CR163	152-0141-02			DIODE,SIG:,ULTRA FAST;40V,150MA,4NS,2PF	27014	FDH9427
A1CR180	152-0141-02			DIODE,SIG:,ULTRA FAST;40V,150MA,4NS,2PF	27014	FDH9427
A1CR181	152-0141-02			DIODE,SIG:,ULTRA FAST;40V,150MA,4NS,2PF	27014	FDH9427
A1CR200	152-0323-01			DIODE,SIG:,;50V,1.25VF,225MA,25PA,2.0PF	14552	MT5127
A1CR201	152-0323-01			DIODE,SIG:,;50V,1.25VF,225MA,25PA,2.0PF	14552	MT5127
A1CR354	152-0141-02			DIODE,SIG:,ULTRA FAST;40V,150MA,4NS,2PF	27014	FDH9427
A1CR360	152-0141-02			DIODE,SIG:,ULTRA FAST;40V,150MA,4NS,2PF	27014	FDH9427
A1CR460	152-0141-02			DIODE,SIG:,ULTRA FAST;40V,150MA,4NS,2PF	27014	FDH9427
A1CR461	152-0141-02			DIODE,SIG:,ULTRA FAST;40V,150MA,4NS,2PF	27014	FDH9427
A1CR476	152-0141-02			DIODE,SIG:,ULTRA FAST;40V,150MA,4NS,2PF	27014	FDH9427
A1CR484	152-0141-02			DIODE,SIG:,ULTRA FAST;40V,150MA,4NS,2PF	27014	FDH9427
A1CR485	152-0141-02			DIODE,SIG:,ULTRA FAST;40V,150MA,4NS,2PF	27014	FDH9427
A1CR495	152-0141-02			DIODE,SIG:,ULTRA FAST;40V,150MA,4NS,2PF	27014	FDH9427
A1CR503	152-0141-02			DIODE,SIG:,ULTRA FAST;40V,150MA,4NS,2PF	27014	FDH9427
A1CR538	152-0141-02			DIODE,SIG:,ULTRA FAST;40V,150MA,4NS,2PF	27014	FDH9427
A1CR539	152-0141-02			DIODE,SIG:,ULTRA FAST;40V,150MA,4NS,2PF	27014	FDH9427
A1CR600	152-0141-02			DIODE,SIG:,ULTRA FAST;40V,150MA,4NS,2PF	27014	FDH9427
A1CR601	152-0141-02			DIODE,SIG:,ULTRA FAST;40V,150MA,4NS,2PF	27014	FDH9427
A1CR616	152-0141-02			DIODE,SIG:,ULTRA FAST;40V,150MA,4NS,2PF	27014	FDH9427
A1CR619	152-0141-02			DIODE,SIG:,ULTRA FAST;40V,150MA,4NS,2PF	27014	FDH9427
A1CR620	152-0141-02			DIODE,SIG:,ULTRA FAST;40V,150MA,4NS,2PF	27014	FDH9427
A1CR621	152-0141-02			DIODE,SIG:,ULTRA FAST;40V,150MA,4NS,2PF	27014	FDH9427
A1CR652	152-0141-02			DIODE,SIG:,ULTRA FAST;40V,150MA,4NS,2PF	27014	FDH9427
A1CR653	152-0141-02			DIODE,SIG:,ULTRA FAST;40V,150MA,4NS,2PF	27014	FDH9427
A1CR707	152-0141-02			DIODE,SIG:,ULTRA FAST;40V,150MA,4NS,2PF	27014	FDH9427
A1CR741	152-0951-00			DIODE,SIG:SCHTKY,;60V,2.25PF	50088	1N6263
A1CR742	152-0951-00			DIODE,SIG:SCHTKY,;60V,2.25PF	50088	1N6263
A1CR746	152-0141-02			DIODE,SIG:,ULTRA FAST;40V,150MA,4NS,2PF	27014	FDH9427
A1CR747	152-0141-02			DIODE,SIG:,ULTRA FAST;40V,150MA,4NS,2PF	27014	FDH9427
A1CR752	152-0075-00			SEMICOND DVC,DI:SW,GE,22V,80MW,DO-7	66891	G866
A1CR753	152-0141-02			DIODE,SIG:,ULTRA FAST;40V,150MA,4NS,2PF	27014	FDH9427
A1CR807	152-0574-00			DIODE,SIG:,ULTRA FAST;120V,150MA,4NS	27014	FDH9876
A1CR811	152-0141-02			DIODE,SIG:,ULTRA FAST;40V,150MA,4NS,2PF	27014	FDH9427
A1CR850	152-0141-02			DIODE,SIG:,ULTRA FAST;40V,150MA,4NS,2PF	27014	FDH9427
A1CR941	152-0141-02			DIODE,SIG:,ULTRA FAST;40V,150MA,4NS,2PF	27014	FDH9427
A1CR942	152-0141-02			DIODE,SIG:,ULTRA FAST;40V,150MA,4NS,2PF	27014	FDH9427
A1CR950	152-0141-02			DIODE,SIG:,ULTRA FAST;40V,150MA,4NS,2PF	27014	FDH9427
A1CR951	152-0141-02			DIODE,SIG:,ULTRA FAST;40V,150MA,4NS,2PF	27014	FDH9427
A1CR956	152-0141-02			DIODE,SIG:,ULTRA FAST;40V,150MA,4NS,2PF	27014	FDH9427

Component Number	Tektronix Part No.	Serial No. Effective	Dscont	Name & Description	Mfr. Code	Mfr. Part No.
A1CR966	152-0574-00			DIODE,SIG:,ULTRA FAST;120V,150MA,4NS	27014	FDH9876
A1CR972	152-0574-00			DIODE,SIG:,ULTRA FAST;120V,150MA,4NS	27014	FDH9876
A1CR987	152-0574-00			DIODE,SIG:,ULTRA FAST;120V,150MA,4NS	27014	FDH9876
A1CR995	152-0061-00			DIODE,SIG:,;200V,0.1A,700NS,4.0PF	27014	FDH2161
A1DL100	119-1490-01			DELAY LINE,ELEC:73NS,150 OHM	80009	119149001
A1E900	276-0712-00			CORE,EM:BALUN,FERRITE	34899	2843002402
A1J1	131-0608-00			TERMINAL,PIN:PRESSFIT/PCB,;MALE,STR (QUANTITY OF 3)	22526	48283-018
A1J9	131-0608-00			TERMINAL,PIN:PRESSFIT/PCB,;MALE,STR	22526	48283-018
A1J11	131-0608-00			TERMINAL,PIN:PRESSFIT/PCB,;MALE,STR (QUANTITY OF 3)	22526	48283-018
A1J100	131-0608-00			TERMINAL,PIN:PRESSFIT/PCB,;MALE,STR (QUANTITY OF 2)	22526	48283-018
A1J101	131-3520-00			CONN,HDR:PCB,;MALE,STR,2 X 5,0.1 CTR	53387	2510-6002UB
A1J102	131-3520-00			CONN,HDR:PCB,;MALE,STR,2 X 5,0.1 CTR	53387	2510-6002UB
A1J103	131-0608-00			TERMINAL,PIN:PRESSFIT/PCB,;MALE,STR (QUANTITY OF 2)	22526	48283-018
A1J104	131-0608-00			TERMINAL,PIN:PRESSFIT/PCB,;MALE,STR (QUANTITY OF 4)	22526	48283-018
A1J105	131-0608-00			TERMINAL,PIN:PRESSFIT/PCB,;MALE,STR (QUANTITY OF 2)	22526	48283-018
A1J109	131-0608-00			TERMINAL,PIN:PRESSFIT/PCB,;MALE,STR (QUANTITY OF 2)	22526	48283-018
A1J120	131-3152-00			CONN,HDR:PCB,;MALE,STR,2 X 8,0.1 CTR	53387	2516-6002UB
A1J181	131-0608-00			TERMINAL,PIN:PRESSFIT/PCB,;MALE,STR (QUANTITY OF 2)	22526	48283-018
A1J411	131-3362-00			CONN,HDR:PCB,;MALE,STR,2 X 13,0.1 CTR	53387	2526-6002UB
A1J511	131-3362-00			CONN,HDR:PCB,;MALE,STR,2 X 13,0.1 CTR	53387	2526-6002UB
A1J512	131-3364-00			CONN,HDR:PCB,;MALE,STR,2 X 17,0.1 CTR	53387	2534-6002UB
A1L101	108-1251-00			COIL,RF:FXD,2.7UH,10%	0JR03	108-1251-00
A1L107	108-1251-00			COIL,RF:FXD,2.7UH,10%	0JR03	108-1251-00
A1L113	108-1251-00			COIL,RF:FXD,2.7UH,10%	0JR03	108-1251-00
A1L115	108-0317-00			COIL,RF:FIXED,15 UH	0JR03	108-0317-00
A1L120	108-1251-00			COIL,RF:FXD,2.7UH,10%	0JR03	108-1251-00
A1L200	108-0509-00			COIL,RF:FIXED,2.45UH +/-10%	0JR03	ORDER BY DESC
A1L219	108-1251-00			COIL,RF:FXD,2.7UH,10%	0JR03	108-1251-00
A1L220	108-1251-00			COIL,RF:FXD,2.7UH,10%	0JR03	108-1251-00
A1L307	108-1251-00			COIL,RF:FXD,2.7UH,10%	0JR03	108-1251-00
A1L325	108-1251-00			COIL,RF:FXD,2.7UH,10%	0JR03	108-1251-00
A1L336	108-1251-00			COIL,RF:FXD,2.7UH,10%	0JR03	108-1251-00
A1L403	108-0552-00			COIL,RF:FIXED,80NH	0JR03	108-0552-00
A1L521	108-1251-00			COIL,RF:FXD,2.7UH,10%	0JR03	108-1251-00
A1L605	108-0170-01			COIL,RF:FIXED,360NH	0JR03	108-0170-01

Component Number	Tektronix Part No.	Serial No. Effective	Dscont	Name & Description	Mfr. Code	Mfr. Part No.
A1L606	108-0736-00			COIL,RF:FIXED,828NH	0JR03	ORDER BY DESC
A1L607	108-0736-00			COIL,RF:FIXED,828NH	0JR03	ORDER BY DESC
A1L608	108-0170-01			COIL,RF:FIXED,360NH	0JR03	108-0170-01
A1L609	108-0509-00			COIL,RF:FIXED,2.45UH +/-10%	0JR03	ORDER BY DESC
A1L610	108-0509-00			COIL,RF:FIXED,2.45UH +/-10%	0JR03	ORDER BY DESC
A1L619	108-0736-00			COIL,RF:FIXED,828NH (STANDARD ONLY)	0JR03	ORDER BY DESC
A1L619	108-0436-00			COIL,RF:FIXED,240UH ON FORM (OPTION 5H ONLY)	0JR03	OBD
A1L628	108-0327-00			COIL,RF:FIXED,48NH	0JR03	ORDER BY DESC
A1L633	108-0327-00			COIL,RF:FIXED,48NH	0JR03	ORDER BY DESC
A1L644	114-0353-00			COIL,RF:VARIABLE,0.6-1.0UH (STANDARD ONLY)	0JR03	ORDER BY DESC
A1L644	114-0352-00			COIL,RF:VARIABLE,220-400NH,PLASTIC FORM (OPTION 5H ONLY)	0JR03	114-0352-00
A1L733	108-1251-00			COIL,RF:FXD,2.7UH,10%	0JR03	108-1251-00
A1L738	108-0317-00			COIL,RF:FIXED,15 UH	0JR03	108-0317-00
A1L740	108-0317-00			COIL,RF:FIXED,15 UH	0JR03	108-0317-00
A1L743	108-1251-00			COIL,RF:FXD,2.7UH,10%	0JR03	108-1251-00
A1L938	108-1251-00			COIL,RF:FXD,2.7UH,10%	0JR03	108-1251-00
A1L973	108-1251-00			COIL,RF:FXD,2.7UH,10%	0JR03	108-1251-00
A1L980	108-1251-00			COIL,RF:FXD,2.7UH,10%	0JR03	108-1251-00
A1LR101	108-0325-00			COIL,RF:FIXED,489NH	0JR03	108-0325-00
A1LR107	108-0325-00			COIL,RF:FIXED,489NH	0JR03	108-0325-00
A1LR180	108-0602-00			COIL,RF:FIXED,45NH	0JR03	108-0602-00
A1LR201	108-0325-00			COIL,RF:FIXED,489NH	0JR03	108-0325-00
A1LR218	108-0330-00			COIL,RF:FIXED,403NH	0JR03	108-0330-00
A1LR219	108-0330-00			COIL,RF:FIXED,403NH	0JR03	108-0330-00
A1LR280	108-0602-00			COIL,RF:FIXED,45NH	0JR03	108-0602-00
A1Q130	151-0622-00			TRANSISTOR,SIG:BIPOLAR,PNP;40V,1.0A,50MHZ	04713	MPS6727
A1Q131	151-0622-00			TRANSISTOR,SIG:BIPOLAR,PNP;40V,1.0A,50MHZ	04713	MPS6727
A1Q154	151-0188-00			TRANSISTOR,SIG:BIPOLAR,PNP;40V,200MA	04713	2N3906
A1Q155	151-0188-00			TRANSISTOR,SIG:BIPOLAR,PNP;40V,200MA	04713	2N3906
A1Q190	151-0190-00			TRANSISTOR,SIG:BIPOLAR,NPN;40V,200MA	04713	2N3904
A1Q460	151-0198-01			TRANSISTOR,SIG:BIPOLAR,NPN;15V,50MA,600MHZ (LOCATIONS A & B)	04713	SPS6897M
A1Q550	151-0190-00			TRANSISTOR,SIG:BIPOLAR,NPN;40V,200MA	04713	2N3904
A1Q600	151-0190-00			TRANSISTOR,SIG:BIPOLAR,NPN;40V,200MA	04713	2N3904
A1Q623	151-0190-00			TRANSISTOR,SIG:BIPOLAR,NPN;40V,200MA	04713	2N3904
A1Q624	151-1025-00			TRANSISTOR,SIG:JFET,N-CH;6V,15MA,4.5MS	TK1864	SNJ3014
A1Q645	151-0188-00			TRANSISTOR,SIG:BIPOLAR,PNP;40V,200MA	04713	2N3906
A1Q700	151-0190-00			TRANSISTOR,SIG:BIPOLAR,NPN;40V,200MA	04713	2N3904

Component Number	Tektronix Part No.	Serial No. Effective	Dscont	Name & Description	Mfr. Code	Mfr. Part No.
A1Q709	151-0736-00			TRANSISTOR,SIG:BIPOLAR,NPN;40V,600MA	0JR04	2N4401
A1Q710	151-0736-00			TRANSISTOR,SIG:BIPOLAR,NPN;40V,600MA	0JR04	2N4401
A1Q740	151-0223-00	B010575	B010808	TRANSISTOR,SIG:BIPOLAR,NPN;15V,500MA	04713	MPS2369A
A1Q741	151-0190-00			TRANSISTOR,SIG:BIPOLAR,NPN;40V,200MA	04713	2N3904
A1Q742	151-0190-00			TRANSISTOR,SIG:BIPOLAR,NPN;40V,200MA	04713	2N3904
A1Q743	151-0188-00			TRANSISTOR,SIG:BIPOLAR,PNP;40V,200MA	04713	2N3906
A1Q745	151-0188-00			TRANSISTOR,SIG:BIPOLAR,PNP;40V,200MA	04713	2N3906
A1Q941	151-0188-00			TRANSISTOR,SIG:BIPOLAR,PNP;40V,200MA	04713	2N3906
A1Q942	151-0188-00	B010100	B010218	TRANSISTOR,SIG:BIPOLAR,PNP;40V,200MA	04713	2N3906
A1Q942	151-0221-00	B010219		TRANSISTOR,SIG:BIPOLAR,PNP;12V,80MA	04713	MPS4258(EL8345)
A1R100	315-0474-00			RES,FXD,FILM:470K OHM,5%,0.25W	TK1727	SFR25 2322-181
A1R101	322-3235-00			RES,FXD:METAL FILM;2.74K OHM,1%,0.2W,TC=100	91637	CCF501G27400F
A1R102	322-3235-00			RES,FXD:METAL FILM;2.74K OHM,1%,0.2W,TC=100	91637	CCF501G27400F
A1R112	322-3097-00			RES,FXD:METAL FILM;100 OHM,1%,0.2W,TC=100	91637	CCF501G100R0F
A1R114	321-0130-03			RES,FXD,FILM:221 OHM,0.25%,0.125W,TC=TI	19701	5033RC221ROC
A1R115	321-0146-00			RES,FXD,FILM:324 OHM,1%,0.125W,TC=T0	91637	CMF55116G324R0F
A1R117	321-0320-00			RES,FXD,FILM:21.0K OHM,1%,0.125W,TC=T0	91637	CMF55116G21001F
A1R118	321-0212-00			RES,FXD,FILM:1.58K OHM,1%,0.125W,TC=T0	91637	CMF55116G15800F
A1R121	313-1121-00			RES,FXD,FILM:120 OHM,5%,0.2W	91637	CCF501G120ROJ
A1R123	313-1622-00			RES,FXD,FILM:6.2K OHM,5%,0.2W	91637	CCF501G62000J
A1R125	301-0361-00			RES,FXD,FILM:360 OHM,5%,0.5W	19701	5053CX360R0J
A1R129	322-3097-00			RES,FXD:METAL FILM;100 OHM,1%,0.2W,TC=100	91637	CCF501G100R0F
A1R130	313-1561-00			RES,FXD,FILM:560 OHM,5%,0.2W	91637	CCF50-2-56OROJ
A1R131	313-1561-00			RES,FXD,FILM:560 OHM,5%,0.2W	91637	CCF50-2-56OROJ
A1R133	322-3201-00			RES,FXD:METAL FILM;1.21K OHM,1%,0.2W,TC=100	91637	CCF501G12100F
A1R135	322-3193-00			RES,FXD:METAL FILM;1K OHM,1%,0.2W,TC=100	91637	CCF501G10000F
A1R136	313-1622-00			RES,FXD,FILM:6.2K OHM,5%,0.2W	91637	CCF501G62000J
A1R140	313-1471-00			RES,FXD,FILM:470 OHM,5%,0.2W	91637	CCF50-2-470R0J
A1R141	313-1471-00			RES,FXD,FILM:470 OHM,5%,0.2W	91637	CCF50-2-470R0J
A1R142	313-1391-00			RES,FXD,FILM:390 OHM,5%,0.2W	91637	CCF50-2-390R0J
A1R143	313-1391-00			RES,FXD,FILM:390 OHM,5%,0.2W	91637	CCF50-2-390R0J
A1R144	307-0108-00			RES,FXD,CMPSN:6.8 OHM,5%,0.25W	01121	CB68G5
A1R149	322-3289-00			RES,FXD:METAL FILM;10K OHM,1%,0.2W,TC=100	91637	CCF50G10001F
A1R150	322-3193-00			RES,FXD:METAL FILM;1K OHM,1%,0.2W,TC=100	91637	CCF501G10000F
A1R152	313-1242-00			RES,FXD,FILM:2.4K OHM,5%,0.2W	91637	CCF50-2-24000J
A1R153	322-3289-00			RES,FXD:METAL FILM;10K OHM,1%,0.2W,TC=100	91637	CCF50G10001F
A1R154	322-3242-00			RES,FXD,FILM:3.24K OHM,1%,0.2W,TC=T0	91637	CCF501G32400F
A1R155	321-0661-00			RES,FXD,FILM:600 OHM,1%,0.125W,TC=T0	91637	CMF55116G600R0F
A1R156	322-3242-00			RES,FXD,FILM:3.24K OHM,1%,0.2W,TC=T0	91637	CCF501G32400F
A1R159	322-3242-00			RES,FXD,FILM:3.24K OHM,1%,0.2W,TC=T0	91637	CCF501G32400F

Component Number	Tektronix Part No.	Serial No. Effective	Dscont	Name & Description	Mfr. Code	Mfr. Part No.
A1R161	322-3293-00			RES,FXD:METAL FILM;11K OHM,1%,0.2W,TC=100	91637	CCF50G11001F
A1R162	322-3293-00			RES,FXD:METAL FILM;11K OHM,1%,0.2W,TC=100	91637	CCF50G11001F
A1R163	322-3242-00			RES,FXD,FILM:3.24K OHM,1%,0.2W,TC=T0	91637	CCF501G32400F
A1R165	313-1822-00			RES,FXD,FILM:8.2K,OHM,5%,0.2W	91637	CCF50-2-82000J
A1R180	322-3242-00			RES,FXD,FILM:3.24K OHM,1%,0.2W,TC=T0	91637	CCF501G32400F
A1R181	322-3289-00			RES,FXD:METAL FILM;10K OHM,1%,0.2W,TC=100	91637	CCF50G10001F
A1R182	322-3242-00			RES,FXD,FILM:3.24K OHM,1%,0.2W,TC=T0	91637	CCF501G32400F
A1R183	322-3289-00			RES,FXD:METAL FILM;10K OHM,1%,0.2W,TC=100	91637	CCF50G10001F
A1R190	322-3289-00			RES,FXD:METAL FILM;10K OHM,1%,0.2W,TC=100	91637	CCF50G10001F
A1R191	322-3289-00			RES,FXD:METAL FILM;10K OHM,1%,0.2W,TC=100	91637	CCF50G10001F
A1R192	322-3289-00			RES,FXD:METAL FILM;10K OHM,1%,0.2W,TC=100	91637	CCF50G10001F
A1R193	322-3193-00			RES,FXD:METAL FILM;1K OHM,1%,0.2W,TC=100	91637	CCF501G10000F
A1R194	322-3289-00			RES,FXD:METAL FILM;10K OHM,1%,0.2W,TC=100	91637	CCF50G10001F
A1R195	322-3143-00			RES,FXD,FILM:301 OHM,1%,0.2W,TC=T0	91637	CCF501G301ROF
A1R196	322-3277-00			RES,FXD,FILM:7.5K OHM,1%,0.2W,TC=T0	91637	CCF501G75000F
A1R197	322-3265-00			RES,FXD:METAL FILM;5.62K OHM,1%,0.2W,TC=100	91637	CCF501G56200F
A1R198	321-1700-04			RES,FXD,FILM:10.44K OHM,0.1%,0.125W,TC=T2	19701	5033RC10K440B
A1R199	321-1700-04			RES,FXD,FILM:10.44K OHM,0.1%,0.125W,TC=T2	19701	5033RC10K440B
A1R200	315-0474-00			RES,FXD,FILM:470K OHM,5%,0.25W	TK1727	SFR25 2322-181-
A1R201	322-3235-00			RES,FXD:METAL FILM;2.74K OHM,1%,0.2W,TC=100	91637	CCF501G27400F
A1R202	322-3235-00			RES,FXD:METAL FILM;2.74K OHM,1%,0.2W,TC=100	91637	CCF501G27400F
A1R216	313-1121-00			RES,FXD,FILM:120 OHM,5%,0.2W	91637	CCF501G120ROJ
A1R217	321-0320-00			RES,FXD,FILM:21.0K OHM,1%,0.125W,TC=T0	91637	CMF55116G21001F
A1R218	321-0212-00			RES,FXD,FILM:1.58K OHM,1%,0.125W,TC=T0	91637	CMF55116G15800F
A1R225	301-0361-00			RES,FXD,FILM:360 OHM,5%,0.5W	19701	5053CX360R0J
A1R230	322-3226-00			RES,FXD:METAL FILM;2.21K OHM,1%,0.2W,TC=100	91637	CCF501G22100F
A1R231	322-3226-00			RES,FXD:METAL FILM;2.21K OHM,1%,0.2W,TC=100	91637	CCF501G22100F
A1R232	322-3226-00			RES,FXD:METAL FILM;2.21K OHM,1%,0.2W,TC=100	91637	CCF501G22100F
A1R301	315-0240-00			RES,FXD,FILM:24 OHM,5%,0.25W	TK1727	SFR25 2322-181-
A1R302	315-0240-00			RES,FXD,FILM:24 OHM,5%,0.25W	TK1727	SFR25 2322-181-
A1R303	322-3097-00			RES,FXD:METAL FILM;100 OHM,1%,0.2W,TC=100	91637	CCF501G100R0F
A1R304	315-0101-00			RES,FXD,FILM:100 OHM,5%,0.25W	TK1727	SFR25 2322-181-
A1R311	315-0101-00			RES,FXD,FILM:100 OHM,5%,0.25W	TK1727	SFR25 2322-181-
A1R312	322-3097-00			RES,FXD:METAL FILM;100 OHM,1%,0.2W,TC=100	91637	CCF501G100R0F
A1R329	322-3097-00			RES,FXD:METAL FILM;100 OHM,1%,0.2W,TC=100	91637	CCF501G100R0F
A1R332	322-3097-00			RES,FXD:METAL FILM;100 OHM,1%,0.2W,TC=100	91637	CCF501G100R0F
A1R353	322-3239-00			RES,FXD,FILM:3.01K OHM,1%,0.2W,TC=T0	91637	CCF501G30100F
A1R361	322-3265-00			RES,FXD:METAL FILM;5.62K OHM,1%,0.2W,TC=100	91637	CCF501G56200F
A1R401	322-3202-00			RES,FXD,FILM:1.24K OHM,1%,0.2W,TC=T0	91637	CCF50-1G12400F
A1R402	322-3085-00			RES,FXD:METAL FILM;75 OHM,1%,0.2W,TC=100	91637	CCF501G75R00F

Component Number	Tektronix Part No.	Serial No. Effective	Dscont	Name & Description	Mfr. Code	Mfr. Part No.
A1R403	311-0607-00			RES,VAR,NONWW:TRMR,10K OHM,0.5W	73138	82PR10K-25D
A1R404	313-1200-00			RES,FXD,FILM:20 OHM,5%,0.2W	91637	CCF50-2-20R00J
A1R405	313-1200-00			RES,FXD,FILM:20 OHM,5%,0.2W	91637	CCF50-2-20R00J
A1R411	311-0978-01			RES,VAR,NONWW:TRMR,250 OHM,0.5W	32997	3329H-K28-251
A1R412	322-3085-00			RES,FXD:METAL FILM;75 OHM,1%,0.2W,TC=100	91637	CCF501G75R00F
A1R416	322-3193-00			RES,FXD:METAL FILM;1K OHM,1%,0.2W,TC=100	91637	CCF501G10000F
A1R417	311-2234-00			RES,VAR,TRMR:CERMET;5K OHM,20%,0.5W	TK2073	GF06UT2 502 M L
A1R430	322-3085-00			RES,FXD:METAL FILM;75 OHM,1%,0.2W,TC=100	91637	CCF501G75R00F
A1R450	321-0310-00			RES,FXD,FILM:16.5K OHM,1%,0.125W,TC=T0	91637	CMF55116G16501F
A1R451	321-0275-00			RES,FXD,FILM:7.15K OHM,1%,0.125W,TC=T0	91637	CMF55116G71500F
A1R452	321-0310-00			RES,FXD,FILM:16.5K OHM,1%,0.125W,TC=T0	91637	CMF55116G16501F
A1R453	321-0275-00			RES,FXD,FILM:7.15K OHM,1%,0.125W,TC=T0	91637	CMF55116G71500F
A1R454	321-0310-00			RES,FXD,FILM:16.5K OHM,1%,0.125W,TC=T0	91637	CMF55116G16501F
A1R455	321-0310-00			RES,FXD,FILM:16.5K OHM,1%,0.125W,TC=T0	91637	CMF55116G16501F
A1R456	321-0333-00			RES,FXD,FILM:28.7K OHM,1%,0.125W,TC=T0	91637	CMF55116G28701F
A1R457	321-0275-00			RES,FXD,FILM:7.15K OHM,1%,0.125W,TC=T0	91637	CMF55116G71500F
A1R458	322-3085-00			RES,FXD:METAL FILM;75 OHM,1%,0.2W,TC=100	91637	CCF501G75R00F
A1R459	322-3085-00			RES,FXD:METAL FILM;75 OHM,1%,0.2W,TC=100	91637	CCF501G75R00F
A1R460	321-0062-00			RES,FXD,FILM:43.2 OHM,0.5%,0.125W,TC=T0	91637	CMF55-116-G43R2
A1R461	322-3139-00			RES,FXD:METAL FILM;274 OHM,1%,0.2W,TC=100	91637	CCF501G274ROF
A1R462	322-3201-00			RES,FXD:METAL FILM;1.21K OHM,1%,0.2W,TC=100	91637	CCF501G12100F
A1R463	322-3193-00			RES,FXD:METAL FILM;1K OHM,1%,0.2W,TC=100	91637	CCF501G10000F
A1R464	321-0063-00			RES,FXD,FILM:44.2 OHM,0.5%,0.125W,TC=T0	91637	CMF55116G44R20F
A1R465	322-3193-00			RES,FXD:METAL FILM;1K OHM,1%,0.2W,TC=100	91637	CCF501G10000F
A1R468	321-0287-00			RES,FXD,FILM:9.53K OHM,1%,0.125W,TC=T0	91637	CMF55116G95300F
A1R469	313-1200-00			RES,FXD,FILM:20 OHM,5%,0.2W	91637	CCF50-2-20R00J
A1R470	322-3322-00			RES,FXD:METAL FILM;22.1K OHM,1%,0.2W,TC=100	91637	CCF501G22101F
A1R471	322-3322-00			RES,FXD:METAL FILM;22.1K OHM,1%,0.2W,TC=100	91637	CCF501G22101F
A1R473	313-1471-00			RES,FXD,FILM:470 OHM,5%,0.2W	91637	CCF50-2-470R0J
A1R476	322-3085-00			RES,FXD:METAL FILM;75 OHM,1%,0.2W,TC=100	91637	CCF501G75R00F
A1R477	322-3258-00			RES,FXD:METAL FILM;4.75K OHM,1%,0.2W,TC=100	56845	CCF50-2-G4751FT
A1R478	321-0193-03			RES,FXD,FILM:1K OHM,0.25%,0.125W,TC=T2	19701	5033RC1K000C
A1R479	322-3193-00			RES,FXD:METAL FILM;1K OHM,1%,0.2W,TC=100	91637	CCF501G10000F
A1R480	321-0375-00			RES,FXD,FILM:78.7K OHM,1%,0.125W,TC=T0	91637	CMF55116G78701F
A1R481	321-0347-00			RES,FXD,FILM:40.2K OHM,1%,0.125W,TC=T0	91637	CMF55116G40201F
A1R482	313-1471-00			RES,FXD,FILM:470 OHM,5%,0.2W	91637	CCF50-2-470R0J
A1R483	321-0347-00			RES,FXD,FILM:40.2K OHM,1%,0.125W,TC=T0	91637	CMF55116G40201F
A1R484	322-3222-00			RES,FXD:METAL FILM;2K OHM,1%,0.2W,TC=100	91637	CCF501G20000F
A1R485	322-3222-00			RES,FXD:METAL FILM;2K OHM,1%,0.2W,TC=100	91637	CCF501G20000F
A1R486	321-0347-00			RES,FXD,FILM:40.2K OHM,1%,0.125W,TC=T0	91637	CMF55116G40201F

Component Number	Tektronix Part No.	Serial No. Effective	Dscont	Name & Description	Mfr. Code	Mfr. Part No.
A1R487	321-0130-03			RES,FXD,FILM:221 OHM,0.25%,0.125W,TC=T2	19701	5033RC221ROC
A1R488	321-1216-03			RES,FXD,FILM:1.76K OHM,0.25%,0.125W,TC=T2	19701	5033RC1K760C
A1R489	321-1216-03			RES,FXD,FILM:1.76K OHM,0.25%,0.125W,TC=T2	19701	5033RC1K760C
A1R490	321-0375-00			RES,FXD,FILM:78.7K OHM,1%,0.125W,TC=T0	91637	CMF55116G78701F
A1R491	322-3193-00			RES,FXD:METAL FILM;1K OHM,1%,0.2W,TC=100	91637	CCF501G10000F
A1R492	321-0193-03			RES,FXD,FILM:1K OHM,0.25%,0.125W,TC=T2	19701	5033RC1K000C
A1R493	322-3258-00			RES,FXD:METAL FILM;4.75K OHM,1%,0.2W,TC=100	56845	CCF50-2-G4751FT
A1R494	313-1201-00			RES,FXD,FILM:200 OHM,5%,0.2W	91637	CCF50-2-200R0J
A1R495	322-3085-00			RES,FXD:METAL FILM;75 OHM,1%,0.2W,TC=100	91637	CCF501G75R00F
A1R496	322-3293-00			RES,FXD:METAL FILM;11K OHM,1%,0.2W,TC=100	91637	CCF50G11001F
A1R497	313-1821-00			RES,FXD,FILM:820 OHM,5%,0.2W	91637	CCF50-2-820R0J
A1R498	313-1821-00			RES,FXD,FILM:820 OHM,5%,0.2W	91637	CCF50-2-820R0J
A1R501	322-3097-00			RES,FXD:METAL FILM;100 OHM,1%,0.2W,TC=100	91637	CCF501G100R0F
A1R502	313-1622-00			RES,FXD,FILM:6.2K OHM,5%,0.2W	91637	CCF501G62000J
A1R503	322-3289-00			RES,FXD:METAL FILM;10K OHM,1%,0.2W,TC=100	91637	CCF50G10001F
A1R504	322-3289-00			RES,FXD:METAL FILM;10K OHM,1%,0.2W,TC=100	91637	CCF50G10001F
A1R511	321-0320-00			RES,FXD,FILM:21.0K OHM,1%,0.125W,TC=T0	91637	CMF55116G21001F
A1R512	322-3293-00			RES,FXD:METAL FILM;11K OHM,1%,0.2W,TC=100	91637	CCF50G11001F
A1R513	313-1470-00			RES,FXD,FILM:47 OHM,5%,0.2W	91637	CCF50-2-47R00J
A1R518	313-1680-00			RES,FXD,FILM:68 OHM,0.2W,5%	91637	CCF50-2-68R00J
A1R519	313-1621-00			RES,FXD,FILM:620 OHM,5%,0.2W	91637	CCF50-2-620ROJ
A1R520	313-1393-00			RES,FXD,FILM:39K OHM,5%,0.2W	91637	CCF50-2-39001J
A1R521	322-3085-00			RES,FXD:METAL FILM;75 OHM,1%,0.2W,TC=100	91637	CCF501G75R00F
A1R527	322-3085-00			RES,FXD:METAL FILM;75 OHM,1%,0.2W,TC=100	91637	CCF501G75R00F
A1R529	313-1561-00			RES,FXD,FILM:560 OHM,5%,0.2W	91637	CCF50-2-56OROJ
A1R537	322-3097-00			RES,FXD:METAL FILM;100 OHM,1%,0.2W,TC=100	91637	CCF501G100R0F
A1R538	313-1621-00			RES,FXD,FILM:620 OHM,5%,0.2W	91637	CCF50-2-620ROJ
A1R542	313-1680-00			RES,FXD,FILM:68 OHM,0.2W,5%	91637	CCF50-2-68R00J
A1R543	313-1621-00			RES,FXD,FILM:620 OHM,5%,0.2W	91637	CCF50-2-620ROJ
A1R544	313-1393-00			RES,FXD,FILM:39K OHM,5%,0.2W	91637	CCF50-2-39001J
A1R545	322-3085-00			RES,FXD:METAL FILM;75 OHM,1%,0.2W,TC=100	91637	CCF501G75R00F
A1R550	313-1471-00			RES,FXD,FILM:470 OHM,5%,0.2W	91637	CCF50-2-470R0J
A1R551	321-1682-07			RES,FXD,FILM:5.7K OHM,0.1%,0.125W,TC=T9	19701	5033RE5K700B
A1R552	321-0641-07			RES,FXD,FILM:1.8K OHM,0.1,0.125W,TC=T9	19701	5033RE1K800B
A1R553	322-3210-00			RES,FXD:METAL FILM;1.5K OHM,1%,0.2W,TC=100	91637	CCF501G15000F
A1R554	322-3213-00			RES,FXD,FILM:1.62K OHM,1%,0.2W,TC=T0	91637	CCF501G16200F
A1R555	321-0294-00			RES,FXD,FILM:11.3K OHM,1%,0.125W,TC=T0	91637	CMF55116G11301F
A1R556	322-3282-00			RES,FXD,FILM:8.45K OHM,1%,0.2W,TC=T0	91637	CCF501G84500F
A1R557	321-0808-07			RES,FXD,FILM:300 OHM,0.1%,0.125W,TC=T9	19701	5033RE300R0B
A1R558	321-0657-07			RES,FXD,FILM:60 OHM,0.1%,0.125W,TC=T9	57668	RB14BZE 60E

Component Number	Tektronix Part No.	Serial No. Effective	Dscont	Name & Description	Mfr. Code	Mfr. Part No.
A1R560	313-1621-00			RES,FXD,FILM:620 OHM,5%,0.2W	91637	CCF50-2-620ROJ
A1R600	313-1270-00			RES,FXD,FILM:27 OHM 5%,0.2W	91637	CCF50-2-27R00J
A1R601	313-1750-00			RES,FXD,FILM:75 OHM,5%,0.2W	91637	CCF50-2-75R00J
A1R602	313-1470-00			RES,FXD,FILM:47 OHM,5%,0.2W	91637	CCF50-2-47R00J
A1R605	311-2227-00			RES,VAR,NONWW:TRMR,100 OHM,20%,0.5W	TK2073	GF06UT2 101 M L
A1R606	313-1100-00			RES,FXD,FILM:10 OHM,5%,0.2W	91637	CCF50-2-10R00J
A1R607	313-1100-00			RES,FXD,FILM:10 OHM,5%,0.2W	91637	CCF50-2-10R00J
A1R614	322-3289-00			RES,FXD:METAL FILM;10K OHM,1%,0.2W,TC=100	91637	CCF50G10001F
A1R615	322-3289-00			RES,FXD:METAL FILM;10K OHM,1%,0.2W,TC=100	91637	CCF50G10001F
A1R617	322-3193-00			RES,FXD:METAL FILM;1K OHM,1%,0.2W,TC=100	91637	CCF501G10000F
A1R618	311-2234-00			RES,VAR,TRMR:CERMET;5K OHM,20%,0.5W	TK2073	GF06UT2 502 M L
A1R619	315-0510-00			RES,FXD,FILM:51 OHM,5%,0.25W	TK1727	SFR25 2322-181-
A1R620	322-3258-00			RES,FXD:METAL FILM;4.75K OHM,1%,0.2W,TC=100	56845	CCF50-2-G4751FT
A1R622	322-3226-00			RES,FXD:METAL FILM;2.21K OHM,1%,0.2W,TC=100	91637	CCF501G22100F
A1R623	322-3097-00			RES,FXD:METAL FILM;100 OHM,1%,0.2W,TC=100	91637	CCF501G100R0F
A1R624	313-1100-00			RES,FXD,FILM:10 OHM,5%,0.2W	91637	CCF50-2-10R00J
A1R637	322-3222-00			RES,FXD:METAL FILM;2K OHM,1%,0.2W,TC=100	91637	CCF501G20000F
A1R638	311-2234-00			RES,VAR,TRMR:CERMET;5K OHM,20%,0.5W	TK2073	GF06UT2 502 M L
A1R639	311-2230-00			RES,VAR,TRMR:CERMET;500 OHM,20%,0.5W	TK2073	GF06UT2 501 M L
A1R642	313-1432-00			RES,FXD,FILM:4.3K OHM,5%,0.2W	91637	CCF50-2-43000J
A1R643	322-3085-00			RES,FXD:METAL FILM;75 OHM,1%,0.2W,TC=100	91637	CCF501G75R00F
A1R644	322-3258-00			RES,FXD:METAL FILM;4.75K OHM,1%,0.2W,TC=100	56845	CCF50-2-G4751FT
A1R645	321-0625-00			RES,FXD,FILM:5.88K OHM,1%,0.125W,TC=T0	56845	CMF-55116G58800
A1R646	321-0252-00			RES,FXD,FILM:4.12K OHM,1%,0.125W,TC=T0	91637	CMF55116G41200F
A1R649	322-3243-00			RES,FXD:METAL FILM;3.32K OHM,1%,0.2W,TC=100	91637	CCF50-1-G33200F
A1R650	322-3318-00			RES,FXD:METAL FILM;20K OHM,1%,0.2W,TC=100	91637	CCF501G20001F
A1R651	322-3189-00			RES,FXD,FILM:909 OHM,1%,0.2W,TC=T0	91637	CCF501G909FOR
A1R652	315-0274-00			RES,FXD,FILM:270K OHM,5%,0.25W	TK1727	SFR25 2322-181-
A1R653	322-3193-00			RES,FXD:METAL FILM;1K OHM,1%,0.2W,TC=100	91637	CCF501G10000F
A1R655	322-3193-00			RES,FXD:METAL FILM;1K OHM,1%,0.2W,TC=100	91637	CCF501G10000F
A1R658	321-0278-00			RES,FXD,FILM:7.68K OHM,1%,0.125W,TC=T0	91637	CMF55116G76800F
A1R659	322-3197-00			RES,FXD,FILM:1.1K OHM,1%,0.2W,TC=T0	91637	CCF501G11000F
A1R669	321-0995-00			RES,FXD,FILM:549K OHM,1%,0.125W,TC=T0	91637	CMF55116G54902F
A1R670	322-3193-00			RES,FXD:METAL FILM;1K OHM,1%,0.2W,TC=100	91637	CCF501G10000F
A1R671	322-3289-00			RES,FXD:METAL FILM;10K OHM,1%,0.2W,TC=100	91637	CCF50G10001F
A1R678	322-3097-00			RES,FXD:METAL FILM;100 OHM,1%,0.2W,TC=100	91637	CCF501G100R0F
A1R700	313-1221-00			RES,FXD,FILM:220 OHM,5%,0.2W	91637	CCF50-2-220R0J
A1R701	322-3223-00			RES,FXD,FILM:2.05K OHM,1%,0.2W,TC=T0	91637	CCF501G20500F
A1R702	321-0252-00			RES,FXD,FILM:4.12K OHM,1%,0.125W,TC=T0	91637	CMF55116G41200F
A1R707	322-3201-00			RES,FXD:METAL FILM;1.21K OHM,1%,0.2W,TC=100	91637	CCF501G12100F

Component Number	Tektronix Part No.	Serial No. Effective	Dscont	Name & Description	Mfr. Code	Mfr. Part No.
A1R708	313-1242-00			RES,FXD,FILM:2.4K OHM,5%,0.2W	91637	CCF50-2-24000J
A1R709	322-3258-00			RES,FXD:METAL FILM;4.75K OHM,1%,0.2W,TC=100	56845	CCF50-2-G4751FT
A1R710	315-0396-00			RES,FXD,FILM:39M OHM,5%,0.25W	01121	CB3965
A1R713	313-1822-00			RES,FXD,FILM:8.2K,OHM,5%,0.2W	91637	CCF50-2-82000J
A1R723	321-0240-00			RES,FXD,FILM:3.09K OHM,1%,0.125W,TC=T0	91637	CMF55116G30900F
A1R724	321-0680-00			RES,FXD,FILM:35.3K OHM,0.5%,0.125W,TC=T2	19701	5033RC35K30D
A1R731	322-3306-00			RES,FXD:METAL FILM;15K OHM,1%,0.2W,TC=100	91637	CCF50-2-G1502F
A1R732	322-3273-00			RES,FXD:METAL FILM;6.81K OHM,1%,0.2W,TC=100	91637	CCF50-2-G68100F
A1R733	322-3218-00			RES,FXD:METAL FILM;1.82K OHM,1%,0.2W,TC=100	91637	CCF501G18200F
A1R734	313-1221-00			RES,FXD,FILM:220 OHM,5%,0.2W	91637	CCF50-2-220R0J
A1R735	313-1273-00			RES,FXD,FILM:27K OHM,5%,0.2W	91637	CCF50-2-27001J
A1R736	321-0217-00			RES,FXD,FILM:1.78K OHM,1%,0.125W,TC=T0	91637	CMF55116G178OOF
A1R737	322-3263-00			RES,FXD,FILM:5.36K OHM,1%,0.2W,TC=T0	56845	CCF502G5361FT
A1R738	322-3273-00			RES,FXD:METAL FILM;6.81K OHM,1%,0.2W,TC=100	91637	CCF50-2-G68100F
A1R742	322-3235-00			RES,FXD:METAL FILM;2.74K OHM,1%,0.2W,TC=100	91637	CCF501G27400F
A1R743	313-1331-00			RES,FXD,FILM:330 OHM,5%,0.2W	91637	CCF50-2-330ROJ
A1R744	322-3085-00			RES,FXD:METAL FILM;75 OHM,1%,0.2W,TC=100	91637	CCF501G75R00F
A1R745	322-3235-00			RES,FXD:METAL FILM;2.74K OHM,1%,0.2W,TC=100	91637	CCF501G27400F
A1R746	301-0470-00			RES,FXD,FILM:47 OHM,5%,0.5W	TK1727	SFR30 2322-182-
A1R747	322-3193-00			RES,FXD:METAL FILM;1K OHM,1%,0.2W,TC=100	91637	CCF501G10000F
A1R748	322-3289-00			RES,FXD:METAL FILM;10K OHM,1%,0.2W,TC=100	91637	CCF50G10001F
A1R749	313-1333-00			RES,FXD,FILM:33K OHM,5%,0.2W	91637	CCF50-2-33001J
A1R750	313-1151-00			RES,FXD,FILM:150 OHM,5%,0.2W	91637	CCF50-2-150R0J
A1R753	313-1242-00			RES,FXD,FILM:2.4K OHM,5%,0.2W	91637	CCF50-2-24000J
A1R754	313-1333-00			RES,FXD,FILM:33K OHM,5%,0.2W	91637	CCF50-2-33001J
A1R755	322-3193-00			RES,FXD:METAL FILM;1K OHM,1%,0.2W,TC=100	91637	CCF501G10000F
A1R757	313-1151-00			RES,FXD,FILM:150 OHM,5%,0.2W	91637	CCF50-2-150R0J
A1R800	321-0147-00			RES,FXD,FILM:332 OHM,1%,0.125W,TC=T0	91637	CMF55116G332R0F
A1R801	311-2230-00			RES,VAR,TRMR:CERMET;500 OHM,20%,0.5W	TK2073	GF06UT2 501 M L
A1R802	311-2234-00			RES,VAR,TRMR:CERMET;5K OHM,20%,0.5W	TK2073	GF06UT2 502 M L
A1R804	313-1151-00			RES,FXD,FILM:150 OHM,5%,0.2W	91637	CCF50-2-150R0J
A1R805	311-1242-00			RES,VAR,NONWW:TRMR,200K OHM,0.5W	32997	3386X-1-204
A1R806	322-3414-00			RES,FXD:METAL FILM;200K OHM,1%,0.2W	91637	CCF501G20002F
A1R809	313-1151-00			RES,FXD,FILM:150 OHM,5%,0.2W	91637	CCF50-2-150R0J
A1R811	301-0331-00			RES,FXD,FILM:330 OHM,5%,0.5W	TK1727	SFR30 2322-182-
A1R817	313-1221-00			RES,FXD,FILM:220 OHM,5%,0.2W	91637	CCF50-2-220R0J
A1R820	321-0337-00			RES,FXD,FILM:31.6K OHM,1%,0.125W,TC=T0	91637	CMF55116G31601F
A1R821	321-0330-00			RES,FXD,FILM:26.7K OHM,1%,0.125W,TC=T0	91637	CMF55116G26701F
A1R822	322-3139-00			RES,FXD:METAL FILM;274 OHM,1%,0.2W,TC=100	91637	CCF501G274ROF
A1R823	322-3193-00			RES,FXD:METAL FILM;1K OHM,1%,0.2W,TC=100	91637	CCF501G10000F

Component Number	Tektronix Part No.	Serial No. Effective	Dscont	Name & Description	Mfr. Code	Mfr. Part No.
A1R849	313-1333-00			RES,FXD,FILM:33K OHM,5%,0.2W	91637	CCF50-2-33001J
A1R850	311-2234-00			RES,VAR,TRMR:CERMET;5K OHM,20%,0.5W	TK2073	GF06UT2 502 M L
A1R852	313-1240-00			RES,FXD,FILM:24 OHM,5%,0.2W	91637	CCF50G24ROOJ
A1R853	313-1240-00			RES,FXD,FILM:24 OHM,5%,0.2W	91637	CCF50G24ROOJ
A1R855	322-3289-00			RES,FXD:METAL FILM;10K OHM,1%,0.2W,TC=100	91637	CCF50G10001F
A1R856	322-3210-00			RES,FXD:METAL FILM;1.5K OHM,1%,0.2W,TC=100	91637	CCF501G15000F
A1R858	322-3239-00			RES,FXD,FILM:3.01K OHM,1%,0.2W,TC=T0	91637	CCF501G30100F
A1R860	311-2234-00			RES,VAR,TRMR:CERMET;5K OHM,20%,0.5W	TK2073	GF06UT2 502 M L
A1R900	322-3097-00			RES,FXD:METAL FILM;100 OHM,1%,0.2W,TC=100	91637	CCF501G100R0F
A1R901	322-3197-00			RES,FXD,FILM:1.1K OHM,1%,0.2W,TC=T0	91637	CCF501G11000F
A1R903	322-3258-00			RES,FXD:METAL FILM;4.75K OHM,1%,0.2W,TC=100	56845	CCF50-2-G4751FT
A1R904	313-1124-00			RES,FXD,FILM:120K OHM,5%,0.2W	91637	CCF50-2-12002J
A1R907	313-1471-00			RES,FXD,FILM:470 OHM,5%,0.2W	91637	CCF50-2-470R0J
A1R910	315-0396-00			RES,FXD,FILM:39M OHM,5%,0.25W	01121	CB3965
A1R912	313-1822-00			RES,FXD,FILM:8.2K,OHM,5%,0.2W	91637	CCF50-2-82000J
A1R924	322-3325-00			RES,FXD,FILM:23.7K OHM,1%,0.2W,TC=T0	91637	CCF501G23701F
A1R936	322-3225-00			RES,FXD,FILM:2.15K OHM,1%,0.2W,TC=T0	91637	CCF501G21500F
A1R937	322-3268-00			RES,FXD,FILM:6.04K OHM,1%,0.2W,TC=T0	91637	CCF501G60400F
A1R939	315-0332-00			RES,FXD,FILM:3.3K OHM,5%,0.25W	TK1727	SFR25 2322-181
A1R940	322-3097-00			RES,FXD:METAL FILM;100 OHM,1%,0.2W,TC=100	91637	CCF501G100R0F
A1R941	313-1151-00			RES,FXD,FILM:150 OHM,5%,0.2W	91637	CCF50-2-150R0J
A1R942	322-3235-00			RES,FXD:METAL FILM;2.74K OHM,1%,0.2W,TC=100	91637	CCF501G27400F
A1R943	313-1151-00	B010100	B010218	RES,FXD,FILM:150 OHM,5%,0.2W	91637	CCF50-2-150R0J
A1R943	313-1470-00	B010219		RES,FXD,FILM:47 OHM,5%,0.2W	91637	CCF50-2-47R00J
A1R944	322-3097-00			RES,FXD:METAL FILM;100 OHM,1%,0.2W,TC=100	91637	CCF501G100R0F
A1R945	322-3235-00			RES,FXD:METAL FILM;2.74K OHM,1%,0.2W,TC=100	91637	CCF501G27400F
A1R946	313-1221-00	B010100	B010574	RES,FXD,FILM:220 OHM,5%,0.2W	91637	CCF50-2-220R0J
A1R946	322-3193-00	B010575	B010808	RES,FXD:METAL FILM;1K OHM,1%,0.2W,TC=100	91637	CCF501G10000F
A1R946	313-1221-00	B010809		RES,FXD,FILM:220 OHM,5%,0.2W	91637	CCF50-2-220R0J
A1R947	322-3117-00	B010100	B050255	RES,FXD,FILM:162 OHM,1%,0.2W,TC=T0	91637	CCF501G162R0F
A1R947	321-0103-00	B050256		RES,FXD,FILM:115 OHM,1%,0.125W,TC=T0	91637	CMF55116G115R0F
A1R949	311-2234-00			RES,VAR,TRMR:CERMET;5K OHM,20%,0.5W	TK2073	GF06UT2 502 M L
A1R950	301-0470-00			RES,FXD,FILM:47 OHM,5%,0.5W	TK1727	SFR30 2322-182
A1R951	308-0555-00			RES,FXD,WW:5 OHM,5%,3W	91637	CW2B-5R000J
A1R952	322-3085-00			RES,FXD:METAL FILM;75 OHM,1%,0.2W,TC=100	91637	CCF501G75R00F
A1R956	322-3239-00			RES,FXD,FILM:3.01K OHM,1%,0.2W,TC=T0	91637	CCF501G30100F
A1R957	321-0291-00			RES,FXD,FILM:10.5K OHM,1%,0.125W,TC=T0	91637	CMF55116G10501F
A1R972	313-1510-00			RES,FXD,FILM:51 OHM,5%,0.2W	91637	CCF501G51R00J
A1R973	313-1513-00			RES,FXD,CMPSN:51K OHM,5%,0.2W	91637	CCF50-2-51001J
A1R975	322-3097-00	B010575	B010808	RES,FXD:METAL FILM;100 OHM,1%,0.2W,TC=100	91637	CCF501G100R0F

Component Number	Tektronix Part No.	Serial No. Effective	Dscont	Name & Description	Mfr. Code	Mfr. Part No.
A1R981	322-3097-00			RES,FXD:METAL FILM;100 OHM,1%,0.2W,TC=100	91637	CCF501G100R0F
A1R982	321-0103-00			RES,FXD,FILM:115 OHM,1%,0.125W,TC=T0	91637	CMF55116G115R0F
A1R985	322-3243-00			RES,FXD:METAL FILM;3.32K OHM,1%,0.2W,TC=100	91637	CCF50-1-G33200F
A1R986	322-3097-00			RES,FXD:METAL FILM;100 OHM,1%,0.2W,TC=100	91637	CCF501G100R0F
A1R995	313-1512-00			RES,FXD,FILM:5.1K OHM,5%,0.2W	91637	CCF50-2-51000J
A1S615	260-1421-00			SWITCH,PUSH:1 BTN,2 POLE,INSTRUMENT ID	71590	2KAA010000512
A1TP800	131-0608-00			TERMINAL,PIN:PRESSFIT/PCB,;MALE,STR	22526	48283-018
A1U100	153-2235-03			MICROCKT,LINEAR:MATCHED PAIR,LOW NOISE	80009	153223503
A1U110	156-1245-00			IC,LINEAR:BIPOLAR,TRANSISTOR ARRAY;7,NPN	0CVK3	ULN2003A
A1U120	156-1245-00			IC,LINEAR:BIPOLAR,TRANSISTOR ARRAY;7,NPN	0CVK3	ULN2003A
A1U130	156-1245-00			IC,LINEAR:BIPOLAR,TRANSISTOR ARRAY;7,NPN	0CVK3	ULN2003A
A1U140	156-0651-00			IC,DIGITAL:LSTTL,SHIFT REGISTER;8-BIT SIPO	01295	SN74LS164N
A1U150	156-0651-00			IC,DIGITAL:LSTTL,SHIFT REGISTER;8-BIT SIPO	01295	SN74LS164N
A1U160	156-1200-01			IC,LINEAR:BIFET,OP-AMP	01295	TL074CN
A1U165	156-2854-00			IC,LINEAR:CMOS,OP-AMP;QUAD,HIGH BIAS OPT	01295	TLC274CN
A1U170	156-0513-03			IC,MISC:CMOS,ANALOG MUX;8 CHANNEL	04713	MC14051BCP
A1U180	156-1191-01			IC,LINEAR:BIFET,OP-AMP;6MV VOS	01295	TL072ACP
A1U200	153-2235-03			MICROCKT,LINEAR:MATCHED PAIR,LOW NOISE	80009	153223503
A1U300	155-0238-00			MICROCKT,LINEAR:TRIGGER PREAMP	80009	155023800
A1U350	156-1191-01			IC,LINEAR:BIFET,OP-AMP;6MV VOS	01295	TL072ACP
A1U400	155-0236-00			MICROCKT,LINEAR:VERTICAL CHANNEL SWITCH	80009	155023600
A1U450	156-0158-07			IC,LINEAR:BIPOLAR,OP-AMP	01295	MC1458P
A1U475	156-0048-00			IC,LINEAR:BIPOLAR,TRANSISTOR ARRAY;(5),NPN	04713	MC3346P
A1U485	156-0048-00			IC,LINEAR:BIPOLAR,TRANSISTOR ARRAY;(5),NPN	04713	MC3346P
A1U500	155-0239-02			MICROCKT,LINEAR:TRIGGER	80009	155023902
A1U550	156-0048-00			IC,LINEAR:BIPOLAR,TRANSISTOR ARRAY;(5),NPN	04713	MC3346P
A1U600	155-0237-00			MICROCKT,LINEAR:VERTICAL OUTPUT (STANDARD ONLY)	80009	155023700
A1U600	155-0237-03			MICROCKT,LINEAR:VERTICAL OUTPUT,50 MHZ (OPTION 5H ONLY)	80009	155023703
A1U650	155-0244-01			MICROCKT,DGTL:SYSTEM LOGIC INTERFACE	31471	2321-001
A1U700	155-0240-00			MICROCKT,LINEAR:SWEEP	80009	155024000
A1U735	156-0048-00			IC,LINEAR:BIPOLAR,TRANSISTOR ARRAY;(5),NPN	04713	MC3346P
A1U800	155-0241-02			MICROCKT,DGTL:HORIZONTAL AMP SYS	80009	155024102
A1U850	156-0515-00			IC,MISC:CMOS,ANALOG MUX;TRIPLE SPDT	04713	MC14053BCP
A1U860	156-0515-00			IC,MISC:CMOS,ANALOG MUX;TRIPLE SPDT	04713	MC14053BCP
A1U900	155-0240-00			MICROCKT,LINEAR:SWEEP	80009	155024000
A1U910	156-1191-01			IC,LINEAR:BIFET,OP-AMP;6MV VOS	01295	TL072ACP
A1U950	155-0242-01			MICROCKT,LINEAR:Z AXIS AUTOFOCUS	80009	155024201
A1U975	160-5062-00	B010100	B010574	MICROCKT,DGTL:STTL,DECA 20 INP AND/OR PLD	80009	ORDER BY DESC
A1U975	160-5062-01	B010575	B010808	MICROCKT,DGTL:STTL,DECA 20 INP,PRGM	80009	ORDER BY DESC
A1U975	160-5062-00	B010809		MICROCKT,DGTL:STTL,DECA 20 INP AND/OR PLD	80009	ORDER BY DESC

Component Number	Tektronix Part No.	Serial No. Effective	Dscont	Name & Description	Mfr. Code	Mfr. Part No.
A1U980	156-1611-01			IC,DIGITAL:FTTL,FLIP FLOP;DUAL D-TYPE	27014	74F74PC
A1U985	156-0341-00			IC,DIGITAL:TTL,DRIVER;DUAL 2-INPUT	01295	SN75453BP
A1VR112	152-0166-00			DIODE,ZENER:,;6.2V,5%,0.4W	04713	SZ11738RL
A1VR125	152-0166-00			DIODE,ZENER:,;6.2V,5%,0.4W	04713	SZ11738RL
A1VR152	152-0236-00			DIODE,ZENER:,;12.5V,4%,0.4W,NON STD VZ	14552	DZ920709B
A1VR225	152-0166-00			DIODE,ZENER:,;6.2V,5%,0.4W	04713	SZ11738RL
A1VR550	152-0195-00			DIODE,ZENER:,;5.1V,5%,0.4W	04713	SZ11755RL
A1W101	131-0566-00			BUS,CONDUCTOR:DUMMY RES,0.094 OD X 0.225L	24546	OMA0207
A1W103	131-0566-00			BUS,CONDUCTOR:DUMMY RES,0.094 OD X 0.225L	24546	OMA0207
A1W104	131-0566-00			BUS,CONDUCTOR:DUMMY RES,0.094 OD X 0.225L	24546	OMA0207
A1W105	131-0566-00			BUS,CONDUCTOR:DUMMY RES,0.094 OD X 0.225L	24546	OMA0207
A1W106	195-6500-02			LEAD,ELECTRICAL:22 AWG,1.75 L,9-N	0J7N9	195-6500-02
A1W107	195-6500-02			LEAD,ELECTRICAL:22 AWG,1.75 L,9-N	0J7N9	195-6500-02
A1W108	195-6500-02			LEAD,ELECTRICAL:22 AWG,1.75 L,9-N	0J7N9	195-6500-02
A1W109	131-0566-00			BUS,CONDUCTOR:DUMMY RES,0.094 OD X 0.225L	24546	OMA0207
A1W120	131-0566-00			BUS,CONDUCTOR:DUMMY RES,0.094 OD X 0.225L	24546	OMA0207
A1W121	175-4594-01			CA ASSY,SP,ELEC:6,22 AWG,5.25 L	0J7N9	ORDER BY DESC
A1W122	175-4598-00			CA ASSY,SP,ELEC:8,26 AWG,7.0 L,RIBBON	TK0753	ORDER BY DESC
A1W151	131-0566-00			BUS,CONDUCTOR:DUMMY RES,0.094 OD X 0.225L	24546	OMA0207
A1W500	131-0566-00	B010100	B010808	BUS,CONDUCTOR:DUMMY RES,0.094 OD X 0.225L	24546	OMA0207
A1W610	131-0566-00			BUS,CONDUCTOR:DUMMY RES,0.094 OD X 0.225L	24546	OMA0207
A1W850	131-0566-00			BUS,CONDUCTOR:DUMMY RES,0.094 OD X 0.225L	24546	OMA0207
A1W918	195-3991-01			LEAD,ELECTRICAL:22 AWG,3.5 L,0-N	TK1352	ORDER BY DESC
A1W919	195-3991-01			LEAD,ELECTRICAL:22 AWG,3.5 L,0-N	TK1352	ORDER BY DESC
A1XU100	136-0763-00			SKT,PL-IN ELEK:26 LINE CONT IMPD HYBRID	00779	54977-1
A1XU191	136-0263-07			SOCKET,CONTACT:PCB,;FEMALE,STR (QUANTITY OF 16)	22526	76215-002
A1XU200	136-0763-00			SKT,PL-IN ELEK:26 LINE CONT IMPD HYBRID	00779	54977-1
A1XU300	136-0764-00			SOCKET,HYBRID:PCB,;STR,48 POS,0.05 CTR	00779	54973-1
A1XU400	136-0763-00			SKT,PL-IN ELEK:26 LINE CONT IMPD HYBRID	00779	54977-1
A1XU500	136-0764-00			SOCKET,HYBRID:PCB,;STR,48 POS,0.05 CTR	00779	54973-1
A1XU600	136-0764-00			SOCKET,HYBRID:PCB,;STR,48 POS,0.05 CTR	00779	54973-1
A1XU700	136-0764-00			SOCKET,HYBRID:PCB,;STR,48 POS,0.05 CTR	00779	54973-1
A1XU900	136-0764-00			SOCKET,HYBRID:PCB,;STR,48 POS,0.05 CTR	00779	54973-1
A1XU950	136-0764-00			SOCKET,HYBRID:PCB,;STR,48 POS,0.05 CTR	00779	54973-1

Component Number	Tektronix Part No.	Serial No. Effective	Dscont	Name & Description	Mfr. Code	Mfr. Part No.
A2	672-1037-13	B010100	B010895	CIRCUIT BD ASSY:LV PWR SPLY MODULE	80009	672103713
A2	672-1037-15	B010896	B051001	CIRCUIT BD ASSY:LV PWR SPLY MODULE	80009	672103715
A2	672-1037-16	B051002		CIRCUIT BD ASSY:LV PWR SPLY MODULE	80009	672103716
A2F90	159-0021-00			FUSE,CARTRIDGE:3AG,2A,250V,FAST BLOW	71400	AGC-2
A2S90	260-1967-00			SWITCH,SLIDE:DPDT 5A/250V 10A/125V	7W718	4021.0512

Component Number	Tektronix Part No.	Serial No. Effective	Dscont	Name & Description	Mfr. Code	Mfr. Part No.
A2A1	--------			CIRCUIT BD ASSY:REGULATOR (AVAILABLE AT THE 672-1037-XX LEVEL ONLY)		
A2A1C1016	285-1222-00			CAP,FXD,PLASTIC:0.068UF,20%,250V	TK0515	PME 271 M 568
A2A1C1018	285-1222-00			CAP,FXD,PLASTIC:0.068UF,20%,250V	TK0515	PME 271 M 568
A2A1C1208	281-0775-01			CAP,FXD,CER DI:0.1UF,20%,50V	04222	SA105E104MAA
A2A1C1220	290-0939-00			CAP,FXD,ELCTLT:10UF,+100-10%,100V	1W344	LX100VB10RM10X2
A2A1C1222	281-0783-00	B010100	B050255	CAP,FXD,CER DI:0.1 UF 20%,100V	04222	SA301E104MAA
A2A1C1222	285-1356-00	B050256		CAP,FXD,PLASTIC:0.047UF,20%,250V	84411	X665 473M250
A2A1C1226	281-0791-00			CAP,FXD,CER DI:270PF,10%,100V	04222	SA102C271KAA
A2A1C1240	290-0939-00			CAP,FXD,ELCTLT:10UF,+100-10%,100V	1W344	LX100VB10RM10X2
A2A1C1245	281-0783-00	B010100	B050255	CAP,FXD,CER DI:0.1 UF 20%,100V	04222	SA301E104MAA
A2A1C1245	285-1356-00	B050256		CAP,FXD,PLASTIC:0.047UF,20%,250V	84411	X665 473M250
A2A1C1246	281-0791-00			CAP,FXD,CER DI:270PF,10%,100V	04222	SA102C271KAA
A2A1C1260	290-0942-00			CAP,FXD,ELCTLT:100UF,+100-10%,25V	0J9R5	CEUFM1E101
A2A1C1261	281-0773-00			CAP,FXD,CER DI:0.01UF,10%,100V,,TUBULAR	TK1743	CGB103KEX
A2A1C1270	281-0791-00			CAP,FXD,CER DI:270PF,10%,100V	04222	SA102C271KAA
A2A1C1272	281-0774-00			CAP,FXD,CER DI:0.022MFD,20%,100V	04222	SA101E223MAA
A2A1C1274	290-0778-00			CAP,FXD,ELCTLT:1UF,20%,50V	0J9R5	CEBPM1H010M(Q)
A2A1C1280	290-0942-00			CAP,FXD,ELCTLT:100UF,+100-10%,25V	0J9R5	CEUFM1E101
A2A1C1290	281-0775-01			CAP,FXD,CER DI:0.1UF,20%,50V	04222	SA105E104MAA
A2A1C1291	290-0778-00			CAP,FXD,ELCTLT:1UF,20%,50V	0J9R5	CEBPM1H010M(Q)
A2A1C1292	290-0778-01			CAP,FXD,ELCTLT:1UF,+20%,50V	55680	UVP1H010MAAITD
A2A1C1300	290-0942-00			CAP,FXD,ELCTLT:100UF,+100-10%,25V	0J9R5	CEUFM1E101
A2A1C1330	290-0942-00			CAP,FXD,ELCTLT:100UF,+100-10%,25V	0J9R5	CEUFM1E101
A2A1C1331	281-0775-01			CAP,FXD,CER DI:0.1UF,20%,50V	04222	SA105E104MAA
A2A1C1350	290-0942-00			CAP,FXD,ELCTLT:100UF,+100-10%,25V	0J9R5	CEUFM1E101
A2A1C1357	281-0773-00			CAP,FXD,CER DI:0.01UF,10%,100V	TK1743	CGB103KEX
A2A1C1374	281-0791-00			CAP,FXD,CER DI:270PF,10%,100V	04222	SA102C271KAA
A2A1C1400	290-0943-02			CAP,FXD,ELCTLT:47UF,20%,25V	1W344	SME25VB47RM5X11
A2A1C1402	290-0943-02			CAP,FXD,ELCTLT:47UF,20%,25V	1W344	SME25VB47RM5X11
A2A1CR1011	152-0750-00			DIODE,RECT:,FAST RCVRY;BRIDGE,600V,3A	TK2319	RKBPC606
A2A1CR1220	152-0066-00			DIODE,RECT:,;400V,1A,IFSM = 30A	05828	GP10G-020
A2A1CR1221	152-0066-00			DIODE,RECT:,;400V,1A,IFSM = 30A	05828	GP10G-020
A2A1CR1241	152-0066-00			DIODE,RECT:,;400V,1A,IFSM = 30A	05828	GP10G-020
A2A1CR1242	152-0066-00			DIODE,RECT:,;400V,1A,IFSM = 30A	05828	GP10G-020
A2A1CR1243	152-0066-00			DIODE,RECT:,;400V,1A,IFSM = 30A	05828	GP10G-020
A2A1CR1244	152-0066-00			DIODE,RECT:,;400V,1A,IFSM = 30A	05828	GP10G-020
A2A1CR1260	152-0066-00			DIODE,RECT:,;400V,1A,IFSM = 30A	05828	GP10G-020
A2A1CR1261	152-0066-00			DIODE,RECT:,;400V,1A,IFSM = 30A	05828	GP10G-020
A2A1CR1262	152-0141-02			DIODE,SIG:,ULTRA FAST;40V,150MA,4NS,2PF	27014	FDH9427
A2A1CR1263	152-0141-02			DIODE,SIG:,ULTRA FAST;40V,150MA,4NS,2PF	27014	FDH9427

Component Number	Tektronix Part No.	Serial No. Effective	Dscont	Name & Description	Mfr. Code	Mfr. Part No.
A2A1CR1264	152-0141-02			DIODE,SIG:,ULTRA FAST;40V,150MA,4NS,2PF	27014	FDH9427
A2A1CR1281	152-0141-02			DIODE,SIG:,ULTRA FAST;40V,150MA,4NS,2PF	27014	FDH9427
A2A1CR1282	152-0141-02			DIODE,SIG:,ULTRA FAST;40V,150MA,4NS,2PF	27014	FDH9427
A2A1CR1283	152-0066-00			DIODE,RECT:,;400V,1A,IFSM = 30A	05828	GP10G-020
A2A1CR1290	152-0141-02			DIODE,SIG:,ULTRA FAST;40V,150MA,4NS,2PF	27014	FDH9427
A2A1CR1294	152-0141-02			DIODE,SIG:,ULTRA FAST;40V,150MA,4NS,2PF	27014	FDH9427
A2A1CR1295	152-0141-02			DIODE,SIG:,ULTRA FAST;40V,150MA,4NS,2PF	27014	FDH9427
A2A1CR1300	152-0141-02			DIODE,SIG:,ULTRA FAST;40V,150MA,4NS,2PF	27014	FDH9427
A2A1CR1301	152-0141-02			DIODE,SIG:,ULTRA FAST;40V,150MA,4NS,2PF	27014	FDH9427
A2A1CR1302	152-0141-02			DIODE,SIG:,ULTRA FAST;40V,150MA,4NS,2PF	27014	FDH9427
A2A1CR1303	152-0066-00			DIODE,RECT:,;400V,1A,IFSM = 30A	05828	GP10G-020
A2A1CR1330	152-0066-00			DIODE,RECT:,;400V,1A,IFSM = 30A	05828	GP10G-020
A2A1CR1331	152-0066-00			DIODE,RECT:,;400V,1A,IFSM = 30A	05828	GP10G-020
A2A1CR1332	152-0066-00			DIODE,RECT:,;400V,1A,IFSM = 30A	05828	GP10G-020
A2A1CR1334	152-0066-00			DIODE,RECT:,;400V,1A,IFSM = 30A	05828	GP10G-020
A2A1CR1351	152-0066-00			DIODE,RECT:,;400V,1A,IFSM = 30A	05828	GP10G-020
A2A1CR1376	152-0141-02			DIODE,SIG:,ULTRA FAST;40V,150MA,4NS,2PF	27014	FDH9427
A2A1E1001	119-0181-00			ARSR,ELEC SURGE:230,GAS FILLED,+/-15%	25088	B1-A230T
A2A1E1002	119-0181-00			ARSR,ELEC SURGE:230,GAS FILLED,+/-15%	25088	B1-A230T
A2A1F1330	159-0185-00			FUSE,CARTRIDGE:5.2 X 20MM,0.75A,125V,	61857	TSC-750MA
A2A1F1330	159-0295-00			FUSE,CARTRIDGE:5 X 20MM,125V,1AMPGLASS	61857	TSC-1
A2A1J121	131-0608-00			TERMINAL,PIN:PRESSFIT/PCB,;MALE,STR (QUANTITY OF 6)	22526	48283-018
A2A1J122	131-0608-00			TERMINAL,PIN:PRESSFIT/PCB,;MALE,STR (QUANTITY OF 7)	22526	48283-018
A2A1J201	131-0608-00			TERMINAL,PIN:PRESSFIT/PCB,;MALE,STR (QUANTITY OF 4)	22526	48283-018
A2A1J202	131-0608-00			TERMINAL,PIN:PRESSFIT/PCB,;MALE,STR (QUANTITY OF 4)	22526	48283-018
A2A1J203	131-2925-00	B010100	B051124	CONN,BOX PWR:PCB,;FEMALE,RTANG,1 X 6	27264	10-10-1064
A2A1J204	131-1048-00			TERM,QIK DISC::PCB,;MALE,STR,0.110 X 0.020	00779	61134-1
A2A1J205	131-1048-00			TERM,QIK DISC::PCB,;MALE,STR,0.110 X 0.020	00779	61134-1
A2A1J206	131-1048-00			TERM,QIK DISC::PCB,;MALE,STR,0.110 X 0.020	00779	61134-1
A2A1J207	131-1048-00			TERM,QIK DISC::PCB,;MALE,STR,0.110 X 0.020	00779	61134-1
A2A1J208	131-0608-00			TERMINAL,PIN:PRESSFIT/PCB,;MALE,STR	22526	48283-018
A2A1J303	131-2926-00			CONN,BOX PWR:PCB,;FEMALE,RTANG,1 X 2	27264	10-10-1024
A2A1L1011	108-0473-00			COIL,RF:FIXED,174UH	0JR03	ORDER BY DESC
A2A1L1012	108-0473-00			COIL,RF:FIXED,174UH	0JR03	ORDER BY DESC
A2A1L1402	108-0443-00			COIL,RF:FIXED,23.5UH	0JR03	108-0443-00
A2A1P208	131-3957-00			BUS,CONDUCTOR:SHUNT,1 X 2,0.1 CTR	22526	68786-202
A2A1Q1220	151-0497-00			TRANSISTOR,PWR:BIPOLAR,NPN;250V,1.0A,10MHZ	04713	TIP47

Component Number	Tektronix Part No.	Serial No. Effective	Dscont	Name & Description	Mfr. Code	Mfr. Part No.
A2A1Q1221	151-0347-00			TRANSISTOR,SIG:BIPOLAR,NPN;160V,600MA	0JR04	2N5551
A2A1Q1222	151-0347-00			TRANSISTOR,SIG:BIPOLAR,NPN;160V,600MA	0JR04	2N5551
A2A1Q1223	151-0347-00			TRANSISTOR,SIG:BIPOLAR,NPN;160V,600MA	0JR04	2N5551
A2A1Q1240	151-0464-00			TRANSISTOR,PWR:BIPOLAR,NPN;100V,3.0A	04713	TIP31C
A2A1Q1241	151-0347-00			TRANSISTOR,SIG:BIPOLAR,NPN;160V,600MA	0JR04	2N5551
A2A1Q1243	151-0347-00			TRANSISTOR,SIG:BIPOLAR,NPN;160V,600MA	0JR04	2N5551
A2A1Q1245	151-0347-00			TRANSISTOR,SIG:BIPOLAR,NPN;160V,600MA	0JR04	2N5551
A2A1Q1280	151-0476-00			TRANSISTOR,PWR:BIPOLAR,NPN;100V,3.0A	04713	TIP31C
A2A1Q1281	151-0347-00			TRANSISTOR,SIG:BIPOLAR,NPN;160V,600MA	0JR04	2N5551
A2A1Q1290	151-1059-00			TRANSISTOR,SIG:JFET,N-CH;10V,30MA(MIN)	TK1864	SNJ132171
A2A1Q1300	151-0482-00			TRANSISTOR,PWR:BIPOLAR,PNP;100V,3.0A	04713	TIP32C
A2A1Q1301	151-0342-00			TRANSISTOR,SIG:BIPOLAR,PNP;60V,50MA,40MHZ	04713	MPS4249
A2A1Q1351	151-0429-00			TRANSISTOR,PWR:BIPOLAR,PNP;60V,4.0A,1.0MHZ	04713	MJE700
A2A1Q1354	151-0342-00			TRANSISTOR,SIG:BIPOLAR,PNP;60V,50MA,40MHZ	04713	MPS4249
A2A1Q1370	151-0341-00			TRANSISTOR,SIG:BIPOLAR,NPN;45V,50MA,40MHZ	04713	MPS6520
A2A1Q1376	151-0341-00			TRANSISTOR,SIG:BIPOLAR,NPN;45V,50MA,40MHZ	04713	MPS6520
A2A1R1010	301-0150-00			RES,FXD,FILM:15 OHM,5%,0.5W	19701	5053CX15R00J
A2A1R1011	315-0560-00			RES,FXD,FILM:56 OHM,5%,0.25W	TK1727	SFR25 2322-181
A2A1R1012	315-0560-00			RES,FXD,FILM:56 OHM,5%,0.25W	TK1727	SFR25 2322-181
A2A1R1013	315-0683-00			RES,FXD,FILM:68K OHM,5%,0.25W	TK1727	SFR25 2322-181
A2A1R1014	313-1363-00			RES,FXD,FILM:36K OHM,5%,0.2W	91637	CCF50-2-36001J
A2A1R1015	313-1363-00			RES,FXD,FILM:36K OHM,5%,0.2W	91637	CCF50-2-36001J
A2A1R1016	301-0680-00			RES,FXD,FILM:68 OHM,5%,0.5W	19701	5053CX68R00J
A2A1R1017	315-0474-00			RES,FXD,FILM:470K OHM,5%,0.25W	TK1727	SFR25 2322-181
A2A1R1018	301-0300-00			RES,FXD,FILM:30 OHM,5%,0.5W	19701	5053CX30R00J
A2A1R1019	301-0150-00			RES,FXD,FILM:15 OHM,5%,0.5W	19701	5053CX15R00J
A2A1R1204	313-1103-00			RES,FXD,FILM:10K OHM,5%,0.2W	91637	CCF50-2-10001J
A2A1R1208	313-1201-00			RES,FXD,FILM:200 OHM,5%,0.2W	91637	CCF50-2-200R0J
A2A1R1212	313-1393-00			RES,FXD,FILM:39K OHM,5%,0.2W	91637	CCF50-2-39001J
A2A1R1220	304-0822-00			RES,FXD,CMPSN:8.2K OHM,10%,1W	01121	GB8221
A2A1R1221	315-0100-02			RES,FXD,CMPSN:10 OHM,5%,0.25W	01121	CB1005
A2A1R1222	313-1102-00			RES,FXD,FILM:1K OHM,5%,0.2W	91637	CCF50-2-10000J
A2A1R1223	313-1823-00			RES,FXD,FILM:82K OHM,5%,0.2W	91637	CCF50-2-82001J
A2A1R1226	313-1472-00			RES,FXD,FILM:4.7K OHM,5%,0.2W	91637	CCF50-2-47000J
A2A1R1227	321-0634-00			RES,FXD,FILM:84.65K OHM,0.25%,0.125W,TC=T2	07716	CEA 84.65 K OHM
A2A1R1228	321-0293-03			RES,FXD,FILM:11.0K OHM,0.25%,0.125W,TC=T2	19701	5033RC11K00C
A2A1R1229	313-1683-00			RES,FXD,FILM:68K OHM,5%,0.2W	91637	CCF50-2-6800IJ
A2A1R1240	303-0202-00			RES,FXD,CMPSN:2K OHM,5%,1W,	91637	CMF65-42 2 K
A2A1R1241	307-0105-00			RES,FXD,CMPSN:3.9 OHM,5%,0.25W	01121	CB 39G5
A2A1R1242	313-1152-00			RES,FXD,FILM:1.5K OHM,5%,0.2W	91637	CCF50-2-15000J

Component Number	Tektronix Part No.	Serial No. Effective	Dscont	Name & Description	Mfr. Code	Mfr. Part No.
A2A1R1243	313-1393-00			RES,FXD,FILM:39K OHM,5%,0.2W	91637	CCF50-2-39001J
A2A1R1244	313-1104-00			RES,FXD,FILM:100K OHM,5%,0.2W	91637	CCF50-2-10002J
A2A1R1246	313-1472-00			RES,FXD,FILM:4.7K OHM,5%,0.2W	91637	CCF50-2-47000J
A2A1R1247	321-0368-00			RES,FXD,FILM:66.5K OHM,1%,0.125W,TC=T0	91637	CMF55116G66501F
A2A1R1248	321-0319-00			RES,FXD,FILM:20.5K OHM,1%,0.125W,TC=T0	91637	CMF55116G20501F
A2A1R1249	313-1473-00			RES,FXD,FILM:47K OHM,5%,0.2W	91637	CCF50-2-47001J
A2A1R1261	321-0289-00			RES,FXD,FILM:10.0K OHM,1%,0.125W,TC=T0	91637	CMF55116G10001F
A2A1R1262	321-0318-00			RES,FXD,FILM:20.0K OHM,1%,0.125W,TC=T0	91637	CMF55116G20001F
A2A1R1264	313-1473-00			RES,FXD,FILM:47K OHM,5%,0.2W	91637	CCF50-2-47001J
A2A1R1270	313-1432-00			RES,FXD,FILM:4.3K OHM,5%,0.2W	91637	CCF50-2-43000J
A2A1R1273	313-1473-00			RES,FXD,FILM:47K OHM,5%,0.2W	91637	CCF50-2-47001J
A2A1R1274	313-1683-00			RES,FXD,FILM:68K OHM,5%,0.2W	91637	CCF50-2-6800IJ
A2A1R1280	303-0470-00			RES,FXD,CMPSN:47 OHM,5%,1W	91637	CMF65-42 47 OHM
A2A1R1281	308-0839-00			RES,FXD:0.1 OHM,5%,1.0W	75042	SP-20-R1000J
A2A1R1282	313-1102-00			RES,FXD,FILM:1K OHM,5%,0.2W	91637	CCF50-2-10000J
A2A1R1283	313-1103-00			RES,FXD,FILM:10K OHM,5%,0.2W	91637	CCF50-2-10001J
A2A1R1284	321-0318-00			RES,FXD,FILM:20.0K OHM,1%,0.125W,TC=T0	91637	CMF55116G20001F
A2A1R1285	321-0318-00			RES,FXD,FILM:20.0K OHM,1%,0.125W,TC=T0	91637	CMF55116G20001F
A2A1R1286	313-1243-00			RES,FXD,FILM:24K OHM,5%,0.2W	91637	R20J24K
A2A1R1287	313-1472-00			RES,FXD,FILM:4.7K OHM,5%,0.2W	91637	CCF50-2-47000J
A2A1R1291	321-0334-00			RES,FXD,FILM:29.4K OHM,1%,0.125W,TC=T0	91637	CMF55116G29401F
A2A1R1292	311-2258-00			RES,VAR,TRMR:CERMET;1K OHM,20%,0.5W	TK2073	GF06V2 102 M L2
A2A1R1293	321-0639-00			RES,FXD,FILM:9.6K OHM,1%,0.125W,TC=T0	91637	CMF55116G96000F
A2A1R1294	313-1103-00			RES,FXD,FILM:10K OHM,5%,0.2W	91637	CCF50-2-10001J
A2A1R1295	313-1103-00			RES,FXD,FILM:10K OHM,5%,0.2W	91637	CCF50-2-10001J
A2A1R1296	313-1103-00			RES,FXD,FILM:10K OHM,5%,0.2W	91637	CCF50-2-10001J
A2A1R1297	322-3289-00			RES,FXD:METAL FILM;10K OHM,1%,0.2W,TC=100	91637	CCF50G10001F
A2A1R1298	322-3275-00			RES,FXD,FILM:7.15K OHM,1%,0.2W,TC=T0	91637	CCF501G71500F
A2A1R1299	313-1224-00			RES,FXD,FILM:220K,5%,0.2W	91637	CCF50-2-22002J
A2A1R1300	303-0470-00			RES,FXD,CMPSN:47 OHM,5%,1W	91637	CMF65-42 47 OHM
A2A1R1301	308-0839-00			RES,FXD:0.1 OHM,5%,1.0W	75042	SP-20-R1000J
A2A1R1302	313-1102-00			RES,FXD,FILM:1K OHM,5%,0.2W	91637	CCF50-2-10000J
A2A1R1304	313-1243-00			RES,FXD,FILM:24K OHM,5%,0.2W	91637	R20J24K
A2A1R1305	321-0289-06			RES,FXD,FILM:10.0K OHM,0.25%,0.125W,TC=T9	19701	5033RE10K00C
A2A1R1306	321-0318-03			RES,FXD,FILM:20.0K OHM,0.125%,0.125W,TC=T2	19701	5033RC20K00C
A2A1R1307	313-1472-00			RES,FXD,FILM:4.7K OHM,5%,0.2W	91637	CCF50-2-47000J
A2A1R1309	313-1222-00			RES,FXD,FILM:2.2K OHM,5%,0.2W	91637	CCF50-2-22000J
A2A1R1331	321-0685-00			RES,FXD,FILM:30K OHM,0.5%,0.125W,TC=T2MI	19701	5033RC30K00D
A2A1R1332	321-0318-03			RES,FXD,FILM:20.0K OHM,0.125%,0.125W,TC=T2	19701	5033RC20K00C
A2A1R1333	313-1751-00			RES,FXD,FILM:750 OHM,5%,0.2W	91637	CCF50-2-750R0J

Component Number	Tektronix Part No.	Serial No. Effective	Dscont	Name & Description	Mfr. Code	Mfr. Part No.
A2A1R1334	313-1103-00			RES,FXD,FILM:10K OHM,5%,0.2W	91637	CCF50-2-10001J
A2A1R1351	313-1202-00			RES,FXD,FILM:2K OHM,5%,0.2W	91637	CCF50-2-20000J
A2A1R1352	301-0150-00			RES,FXD,FILM:15 OHM,5%,0.5W	19701	5053CX15R00J
A2A1R1353	301-0150-00			RES,FXD,FILM:15 OHM,5%,0.5W	19701	5053CX15R00J
A2A1R1354	313-1222-00			RES,FXD,FILM:2.2K OHM,5%,0.2W	91637	CCF50-2-22000J
A2A1R1355	313-1682-00			RES,FXD,FILM:6.8K OHM,5%,0.2W	91637	CCF50-2-68000J
A2A1R1356	313-1512-00			RES,FXD,FILM:5.1K OHM,5%,0.2W	91637	CCF50-2-51000J
A2A1R1357	321-0318-03			RES,FXD,FILM:20.0K OHM,0.125%,0.125W,TC=T2	19701	5033RC20K00C
A2A1R1358	321-0689-00			RES,FXD,FILM:24.9K OHM,0.5%,0.125W,TC=T0	19701	5033RD24K90D
A2A1R1359	313-1682-00			RES,FXD,FILM:6.8K OHM,5%,0.2W	91637	CCF50-2-68000J
A2A1R1370	321-0363-00			RES,FXD,FILM:59.0K OHM,1%,0.125W,TC=T0	91637	CMF55116G59001F
A2A1R1372	321-0299-00			RES,FXD,FILM:12.7K OHM,1%,0.125W,TC=T0	91637	CMF55116G12701F
A2A1R1374	313-1103-00			RES,FXD,FILM:10K OHM,5%,0.2W	91637	CCF50-2-10001J
A2A1R1376	321-0318-03			RES,FXD,FILM:20.0K OHM,0.125%,0.125W,TC=T2	19701	5033RC20K00C
A2A1R1378	313-1202-00			RES,FXD,FILM:2K OHM,5%,0.2W	91637	CCF50-2-20000J
A2A1R1400	315-0101-03	B010100	B010895	RES,FXD,CMPSN:100 OHM,5%,0.25W	01121	CB1015
A2A1R1400	315-0560-00	B010896		RES,FXD,FILM:56 OHM,5%,0.25W	TK1727	SFR25 2322-181
A2A1R1402	315-0101-03			RES,FXD,CMPSN:100 OHM,5%,0.25W	01121	CB1015
A2A1RT1010	307-0350-00			RES,THERMAL:7.5 OHM,10%,3.9%/DEG C	15454	75DJ7R5K-RO-220
A2A1RT1016	307-0746-00			RES,THERMAL:5 OHM,10%,7A/DEG C	15454	SG200-S
A2A1S350	260-1849-00			SWITCH,PUSH:DPDT,4A,250VAC	31918	51809
A2A1T1229	120-1401-00			XFMR,TRIGGER:LINE,1:1 TURNS RATIO	54937	DMI 500-2044
A2A1U1260	156-1161-00			IC,LINEAR:BIPOLAR,VOLTAGE REGULATOR	04713	LM317T
A2A1U1270	156-0495-00			IC,LINEAR:BIPOLAR,OP-AMP;QUAD	01295	LM324N
A2A1U1281	156-0158-07			IC,LINEAR:BIPOLAR,OP-AMP	01295	MC1458P
A2A1U1290	156-1173-00			IC,LINEAR:BIPOLAR,VOLTAGE REFERENCE	04713	MC1403U
A2A1U1300	156-0495-00			IC,LINEAR:BIPOLAR,OP-AMP;QUAD	01295	LM324N
A2A1U1330	156-0872-00			IC,LINEAR:BIPOLAR,VOLTAGE REGULATOR	04713	MC7912CT
A2A1U1371	156-0495-00			IC,LINEAR:BIPOLAR,OP-AMP;QUAD	01295	LM324N
A2A1VR1293	152-0055-00			DIODE,ZENER:,;11V,5%,0.4W	04713	SZG35009K1 1N96
A2A1W251	175-4585-00			CA ASSY,SP,ELEC:20,28 AWG,13.0 L	53387	ORDER BY DESC

Component Number	Tektronix Part No.	Serial No. Effective	Dscont	Name & Description	Mfr. Code	Mfr. Part No.
A3	--------			CIRCUIT BD ASSY:INVERTER (AVAILABLE AT THE 672-1037-XX LEVEL ONLY)		
A3C1020	285-1192-00			CAP,FXD,PPR DI:0.0022 UF,20%,250VAC	TK0515	PME271Y422
A3C1021	290-0971-00			CAP,FXD,ELCTLT:290UF +50-10%,200V	24165	39DX1314
A3C1022	290-0971-00			CAP,FXD,ELCTLT:290UF +50-10%,200V	24165	39DX1314
A3C1023	281-0773-00			CAP,FXD,CER DI:0.01UF,10%,100V	TK1743	CGB103KEX
A3C1025	290-0942-00			CAP,FXD,ELCTLT:100UF,+100-10%,25V	0J9R5	CEUFM1E101
A3C1029	281-0850-00			CAP,FXD,CER DI:820PF,5%,50VDC	TK1743	CGC821JDN
A3C1032	281-0812-00			CAP,FXD,CER DI:1000PF,10%,100V	04222	SA101C102KAA
A3C1033	281-0772-00			CAP,FXD,CER DI:4700PF,10%,100V	04222	SA101C472KAA
A3C1034	290-0524-00			CAP,FXD,ELCTLT:4.7UF,20%,10V	D5243	ETP-1B 4.7UF 10
A3C1035	281-0772-00			CAP,FXD,CER DI:4700PF,10%,100V	04222	SA101C472KAA
A3C1040	281-0773-00			CAP,FXD,CER DI:0.01UF,10%,100V	TK1743	CGB103KEX
A3C1042	281-0773-00			CAP,FXD,CER DI:0.01UF,10%,100V	TK1743	CGB103KEX
A3C1048	281-0826-00			CAP,FXD,CER DI:2200PF,10%,100V	TK1743	CGB222KEX
A3C1050	285-1254-00			CAP,FXD,PLASTIC:0.22UF,10%,400WVDC	84411	TEK-257-22494
A3C1051	285-1192-00			CAP,FXD,PPR DI:0.0022 UF,20%,250VAC	TK0515	PME271Y422
A3C1052	285-1196-00			CAP,FXD,PPR DI:0.01UF,20%,250V	TK0515	PME 289 MB 5100
A3C1062	281-0850-00			CAP,FXD,CER DI:820PF,5%,50VDC	TK1743	CGC821JDN
A3C1065	285-1190-00			CAP,FXD,MTLZD:0.056 UF,5%,250 V	05292	PMT3R ADVISE
A3C1066	290-0782-01			CAP,FXD,ELCTLT:4.7UF,20%,35VDC	55680	UVX1V4R7MAA1TD
A3C1067	281-0850-00			CAP,FXD,CER DI:820PF,5%,50VDC	TK1743	CGC821JDN
A3C1071	281-0772-00			CAP,FXD,CER DI:4700PF,10%,100V	04222	SA101C472KAA
A3C1072	290-0806-00			CAP,FXD,ELCTLT:3.3UF,+75-10%,350VDC	0J9R5	CE04W2V3R3B
A3C1075	281-0775-01			CAP,FXD,CER DI:0.1UF,20%,50V	04222	SA105E104MAA
A3C1101	290-0942-00			CAP,FXD,ELCTLT:100UF,+100-10%,25V	0J9R5	CEUFM1E101
A3C1102	290-0942-00			CAP,FXD,ELCTLT:100UF,+100-10%,25V	0J9R5	CEUFM1E101
A3C1110	290-0800-00			CAP,FXD,ELCTLT:250UF,+100-10%,20V	1W344	RXC25B251W12X24
A3C1111	290-0800-00			CAP,FXD,ELCTLT:250UF,+100-10%,20V	1W344	RXC25B251W12X24
A3C1112	290-0782-01			CAP,FXD,ELCTLT:4.7UF,20%,35VDC	55680	UVX1V4R7MAA1TD
A3C1113	290-0798-00			CAP,FXD,ELCTLT:180UF,+100-10%,40V	24165	672D187H040DM5C
A3C1114	290-0800-00			CAP,FXD,ELCTLT:250UF,+100-10%,20V	1W344	RXC25B251W12X24
A3C1115	290-0800-00			CAP,FXD,ELCTLT:250UF,+100-10%,20V	1W344	RXC25B251W12X24
A3C1116	290-0798-00			CAP,FXD,ELCTLT:180UF,+100-10%,40V	24165	672D187H040DM5C
A3C1120	290-0939-00			CAP,FXD,ELCTLT:10UF,+100-10%,100V	1W344	LX100VB10RM10X2
A3C1130	290-0939-00			CAP,FXD,ELCTLT:10UF,+100-10%,100V	1W344	LX100VB10RM10X2
A3C1132	290-0880-00			CAP,FXD,ALUM:10UF,+50-20%,160V,0.394 X0.623	0J9R5	CEUSM2C100-Q
A3CR1022	152-0333-00			SEMICOND DVC,DI:SW,SI,55V,200MA,DO-35	27014	FDH-6012
A3CR1023	152-0141-02			DIODE,SIG:,ULTRA FAST;40V,150MA,4NS,2PF	27014	FDH9427
A3CR1028	152-0141-02			DIODE,SIG:,ULTRA FAST;40V,150MA,4NS,2PF	27014	FDH9427

Component Number	Tektronix Part No.	Serial No. Effective	Dscont	Name & Description	Mfr. Code	Mfr. Part No.
A3CR1030	152-0141-02			DIODE,SIG:,ULTRA FAST;40V,150MA,4NS,2PF	27014	FDH9427
A3CR1034	152-0141-02			DIODE,SIG:,ULTRA FAST;40V,150MA,4NS,2PF	27014	FDH9427
A3CR1035	152-0141-02			DIODE,SIG:,ULTRA FAST;40V,150MA,4NS,2PF	27014	FDH9427
A3CR1040	152-0075-00			SEMICOND DVC,DI:SW,GE,22V,80MW,DO-7	66891	G866
A3CR1050	152-1165-00			DIODE,RECT:,ULTRA FAST;600V,4A,50NS	04713	MUR460RL
A3CR1060	152-0040-00			DIODE,RECT:,;600V,1A,50A	14936	GP15J-069
A3CR1062	152-0333-00			SEMICOND DVC,DI:SW,SI,55V,200MA,DO-35	27014	FDH-6012
A3CR1063	152-0333-00			SEMICOND DVC,DI:SW,SI,55V,200MA,DO-35	27014	FDH-6012
A3CR1064	152-0333-00			SEMICOND DVC,DI:SW,SI,55V,200MA,DO-35	27014	FDH-6012
A3CR1065	152-0333-00			SEMICOND DVC,DI:SW,SI,55V,200MA,DO-35	27014	FDH-6012
A3CR1070	152-0040-00			DIODE,RECT:,;600V,1A,50A IFSM	14936	GP15J-069
A3CR1072	152-0066-00			DIODE,RECT:,;400V,1A,IFSM = 30A	05828	GP10G-020
A3CR1101	152-0400-00	B010100	B051001	DIODE,RECT:,FAST RCVRY;400V,1A,200NS	14552	MB2501
A3CR1101	152-0601-01	B051002		SEMICOND DVC,DI:RECTIFIER,SI,150V,1A	04713	MUR115RL
A3CR1102	152-0400-00	B010100	B051001	DIODE,RECT:,FAST RCVRY;400V,1A,200NS	14552	MB2501
A3CR1102	152-0601-01	B051002		SEMICOND DVC,DI:RECTIFIER,SI,150V,1A	04713	MUR115RL
A3CR1103	152-0400-00	B010100	B051001	DIODE,RECT:,FAST RCVRY;400V,1A,200NS	14552	MB2501
A3CR1103	152-0601-01	B051002		SEMICOND DVC,DI:RECTIFIER,SI,150V,1A	04713	MUR115RL
A3CR1104	152-0400-00	B010100	B051001	DIODE,RECT:,FAST RCVRY;400V,1A,200NS	14552	MB2501
A3CR1104	152-0601-01	B051002		SEMICOND DVC,DI:RECTIFIER,SI,150V,1A	04713	MUR115RL
A3CR1105	152-0400-00	B010100	B051001	DIODE,RECT:,FAST RCVRY;400V,1A,200NS	14552	MB2501
A3CR1105	152-0601-01	B051002		SEMICOND DVC,DI:RECTIFIER,SI,150V,1A	04713	MUR115RL
A3CR1106	152-0400-00	B010100	B051001	DIODE,RECT:,FAST RCVRY;400V,1A,200NS	14552	MB2501
A3CR1106	152-0601-01	B051002		SEMICOND DVC,DI:RECTIFIER,SI,150V,1A	04713	MUR115RL
A3CR1110	152-0794-00			SEMICOND DVC,DI:RECT,SI,10A,30V,TO-220	81483	95-4269
A3CR1113	152-0946-00			SEMICOND DVC,DI:RECT,SI,40V,3.0A	04713	1N5822
A3CR1114	156-0946-00			IC,DIGITAL:MOS,TV CAMERA SYNC GEN	80009	156094600
A3CR1115	152-0946-00			SEMICOND DVC,DI:RECT,SI,40V,3.0A	04713	1N5822
A3CR1116	152-0946-00			SEMICOND DVC,DI:RECT,SI,40V,3.0A	04713	1N5822
A3CR1121	152-0400-00	B010100	B051001	DIODE,RECT:,FAST RCVRY;400V,1A,200NS	14552	MB2501
A3CR1121	152-0601-01	B051002		SEMICOND DVC,DI:RECTIFIER,SI,150V,1A	04713	MUR115RL
A3CR1122	152-0400-00	B010100	B051001	DIODE,RECT:,FAST RCVRY;400V,1A,200NS	14552	MB2501
A3CR1122	152-0601-01	B051002		SEMICOND DVC,DI:RECTIFIER,SI,150V,1A	04713	MUR115RL
A3CR1123	152-0400-00	B010100	B051001	DIODE,RECT:,FAST RCVRY;400V,1A,200NS	14552	MB2501
A3CR1123	152-0601-01	B051002		SEMICOND DVC,DI:RECTIFIER,SI,150V,1A	04713	MUR115RL
A3CR1124	152-0400-00	B010100	B051001	DIODE,RECT:,FAST RCVRY;400V,1A,200NS	14552	MB2501
A3CR1124	152-0601-01	B051002		SEMICOND DVC,DI:RECTIFIER,SI,150V,1A	04713	MUR115RL
A3CR1131	152-0400-00	B010100	B051001	DIODE,RECT:,FAST RCVRY;400V,1A,200NS	14552	MB2501
A3CR1131	152-0601-01	B051002		SEMICOND DVC,DI:RECTIFIER,SI,150V,1A	04713	MUR115RL
A3CR1132	152-0400-00	B010100	B051001	DIODE,RECT:,FAST RCVRY;400V,1A,200NS	14552	MB2501

Component Number	Tektronix Part No.	Serial No. Effective	Dscont	Name & Description	Mfr. Code	Mfr. Part No.
A3CR1132	152-0601-01	B051002		SEMICOND DVC,DI:RECTIFIER,SI,150V,1A	04713	MUR115RL
A3F1101	159-0255-00			FUSE,CARTRIDGE:FAST BLOW,4A,125V	61857	EQ4A
A3F1102	159-0059-00			FUSE,WIRE LEAD:5A,125V	61857	SPI-5A
A3J301	131-0608-00			TERMINAL,PIN:PRESSFIT/PCB,;MALE,STR (QUANTITY OF 3)	22526	48283-018
A3J302	131-0608-00			TERMINAL,PIN:PRESSFIT/PCB,;MALE,STR (QUANTITY OF 3)	22526	48283-018
A3L1110	108-0554-00			COIL,RF:FIXED,5UH,+/-20%	0JR03	108-0554-00
A3L1113	108-1144-00			COIL,RF:FIXED,27 UH,20%	0JR03	ORDER BY DESC
A3L1114	108-1144-00			COIL,RF:FIXED,27 UH,20%	0JR03	ORDER BY DESC
A3L1115	108-1144-00			COIL,RF:FIXED,27 UH,20%	0JR03	ORDER BY DESC
A3L1116	108-1144-00			COIL,RF:FIXED,27 UH,20%	0JR03	ORDER BY DESC
A3Q1021	151-0301-00			TRANSISTOR,SIG:BIPOLAR,PNP;60V,600MA	04713	2N2907A
A3Q1022	151-0192-00			TRANSISTOR,SIG:BIPOLAR,NPN;25V,100MA	04713	SPS8801
A3Q1029	151-0254-00			TRANSISTOR,SIG:BIPOLAR,NPN;30V,500MA	0JR04	MPS-A14
A3Q1030	151-0301-00			TRANSISTOR,SIG:BIPOLAR,PNP;60V,600MA	04713	2N2907A
A3Q1040	151-0302-00			TRANSISTOR,SIG:BIPOLAR,NPN;40V,800MA	04713	2N2222A
A3Q1050	151-1152-00			TRANSISTOR,PWR:MOS,N-CH;500V,2.5A,3.0 OHM	04713	MTP3N50E
A3Q1060	151-1152-00			TRANSISTOR,PWR:MOS,N-CH;500V,2.5A,3.0 OHM	04713	MTP3N50E
A3Q1062	151-0302-00			TRANSISTOR,SIG:BIPOLAR,NPN;40V,800MA	04713	2N2222A
A3Q1070	151-1152-00			TRANSISTOR,PWR:MOS,N-CH;500V,2.5A,3.0 OHM	04713	MTP3N50E
A3Q1110	151-0188-00			TRANSISTOR,SIG:BIPOLAR,PNP;40V,200MA	04713	2N3906
A3R1018	313-1394-00			RES,FXD,FILM:390K,5%,0.2W	91637	CCF50-2-39002J
A3R1019	313-1394-00			RES,FXD,FILM:390K,5%,0.2W	91637	CCF50-2-39002J
A3R1020	301-0274-00			RES,FXD,FILM:270K OHM,5%,0.5W	19701	5053CX270K0J
A3R1022	313-1104-00			RES,FXD,FILM:100K OHM,5%,0.2W	91637	CCF50-2-10002J
A3R1023	313-1122-00			RES,FXD,FILM:1.2K OHM,5%,0.2W	91637	CCF50-2-12000J
A3R1024	313-1473-00			RES,FXD,FILM:47K OHM,5%,0.2W	91637	CCF50-2-47001J
A3R1025	313-1302-00			RES,FXD,FILM:3K OHM,5%,0.2W	91637	CCF50-2-30000J
A3R1027	321-0431-00			RES,FXD,FILM:301K OHM,1%,0.125W,TC=T0	91637	CMF55116G30102F
A3R1028	321-0481-04			RES,FXD,FILM:1M OHM,0.1%,0.125W,TC=T2	19701	5033RC1M000B
A3R1029	313-1152-00			RES,FXD,FILM:1.5K OHM,5%,0.2W	91637	CCF50-2-15000J
A3R1030	313-1102-00			RES,FXD,FILM:1K OHM,5%,0.2W	91637	CCF50-2-10000J
A3R1031	313-1334-00			RES,FXD,FILM:330K OHM,5%,0.2W	91637	CCF502-33002J
A3R1032	321-0335-00			RES,FXD,FILM:30.1K OHM,1%,0.125W,TC=T0	91637	CMF55116G30101F
A3R1033	313-1104-00			RES,FXD,FILM:100K OHM,5%,0.2W	91637	CCF50-2-10002J
A3R1034	313-1102-00			RES,FXD,FILM:1K OHM,5%,0.2W	91637	CCF50-2-10000J
A3R1035	313-1103-00			RES,FXD,FILM:10K OHM,5%,0.2W	91637	CCF50-2-10001J
A3R1036	313-1103-00			RES,FXD,FILM:10K OHM,5%,0.2W	91637	CCF50-2-10001J
A3R1037	313-1272-00			RES,FXD,FILM:2.7K OHM,5%,0.2W	91637	CCF50-2-27000J
A3R1040	313-1103-00			RES,FXD,FILM:10K OHM,5%,0.2W	91637	CCF50-2-10001J

Component Number	Tektronix Part No.	Serial No. Effective	Dscont	Name & Description	Mfr. Code	Mfr. Part No.
A3R1041	313-1471-00			RES,FXD,FILM:470 OHM,5%,0.2W	91637	CCF50-2-470R0J
A3R1042	313-1102-00			RES,FXD,FILM:1K OHM,5%,0.2W	91637	CCF50-2-10000J
A3R1044	321-0334-00			RES,FXD,FILM:29.4K OHM,1%,0.125W,TC=T0	91637	CMF55116G29401F
A3R1045	321-0289-00			RES,FXD,FILM:10.0K OHM,1%,0.125W,TC=T0	91637	CMF55116G10001F
A3R1046	321-0422-00			RES,FXD,FILM:243K OHM,1%,0.125W,TC=T0	91637	CMF55116G24302F
A3R1050	308-0843-00			RES,FXD:WIREWOUND;0.2 OHM,5%,1W	91637	CW-1-R20JT
A3R1052	313-1470-00			RES,FXD,FILM:47 OHM,5%,0.2W	91637	CCF50-2-47R00J
A3R1060	313-1470-00			RES,FXD,FILM:47 OHM,5%,0.2W	91637	CCF50-2-47R00J
A3R1061	313-1202-00			RES,FXD,FILM:2K OHM,5%,0.2W	91637	CCF50-2-20000J
A3R1062	313-1682-00			RES,FXD,FILM:6.8K OHM,5%,0.2W	91637	CCF50-2-68000J
A3R1063	313-1202-00			RES,FXD,FILM:2K OHM,5%,0.2W	91637	CCF50-2-20000J
A3R1064	313-1202-00			RES,FXD,FILM:2K OHM,5%,0.2W	91637	CCF50-2-20000J
A3R1065	315-0154-00			RES,FXD,FILM:150K OHM,5%,0.25W	TK1727	SFR25 2322-181-
A3R1066	313-1202-00			RES,FXD,FILM:2K OHM,5%,0.2W	91637	CCF50-2-20000J
A3R1067	313-1682-00			RES,FXD,FILM:6.8K OHM,5%,0.2W	91637	CCF50-2-68000J
A3R1068	313-1202-00			RES,FXD,FILM:2K OHM,5%,0.2W	91637	CCF50-2-20000J
A3R1069	303-0363-00			RES,FXD,CMPSN:36K OHM,5%,1W	91637	CMF65-42 36K 5
A3R1070	313-1470-00			RES,FXD,FILM:47 OHM,5%,0.2W	91637	CCF50-2-47R00J
A3R1071	315-0431-00			RES,FXD,FILM:430 OHM,5%,0.25W	TK1727	SFR25 2322-181
A3R1072	321-0318-03			RES,FXD,FILM:20.0K OHM,0.125%,0.125W,TC=T2	19701	5033RC20K00C
A3R1075	313-1472-00			RES,FXD,FILM:4.7K OHM,5%,0.2W	91637	CCF50-2-47000J
A3R1110	321-0219-00			RES,FXD,FILM:1.87K OHM,1%,0.125W,TC=T0	91637	CMF55116G18700F
A3R1111	315-0510-00			RES,FXD,FILM:51 OHM,5%,0.25W	TK1727	SFR25 2322-181-
A3R1112	321-0271-00			RES,FXD,FILM:6.49K OHM,1%,0.125W,TC=T0	91637	CMF55116G64900F
A3R1113	321-0271-00			RES,FXD,FILM:6.49K OHM,1%,0.125W,TC=T0	91637	CMF55116G64900F
A3R1114	321-0297-00			RES,FXD,FILM:12.1K OHM,1%,0.125W,TC=T0	91637	CMF55116G12101F
A3R1115	301-0301-00			RES,FXD,FILM:300 OHM,5%,0.5W	TK1727	SFR30 2322-182
A3R1129	313-1474-00			RES,FXD,FILM:470K OHM,5%,0.2W	91637	R20J470K
A3R1130	313-1273-00			RES,FXD,FILM:27K OHM,5%,0.2W	91637	CCF50-2-27001J
A3RL1060	108-0329-00			COIL,RF:FIXED,2.4UH	0JR03	108-0329-00
A3RT1110	307-0124-00			RES,THERMAL:5K OHM,10%,NTC	91637	C132
A3S1020	260-0907-01			SWITCH,THRMSTC:NC,OPEN 97.8,CL 75.6,10A	TK2292	430-1537
A3T1020	120-1244-00			TRANSFORMER,RF:COMMON MODE,13MH,0.5A	20462	4096
A3T1050	120-1417-00			TRANSFORMER,RF:POWER HIGH FREQUENCY	54937	500-2311
A3T1060	120-1437-00			XFMR,PWR,STPDN:2445/24465	02113	C1310
A3U1029	156-0885-05			CPLR,OPTOELECTR:LED,5KV,ISOLATION	0JR04	TLP631 TEK-L
A3U1030	156-1627-00			IC,LINEAR:BIPOLAR,SW-REGULATOR CONTROLLER	01295	TL594CN
A3U1040	156-0885-05			CPLR,OPTOELECTR:LED,5KV,ISOLATION	0JR04	TLP631 TEK-L
A3U1062	156-0411-02			IC,LINEAR:BIPOLAR,COMPARATOR	04713	LM339N
A3U1064	156-0366-00			IC,DIGITAL:CMOS,FLIP FLOP;DUAL D-TYPE	04713	MC14013BCP

Component Number	Tektronix Part No.	Serial No. Effective	Dscont	Name & Description	Mfr. Code	Mfr. Part No.
A3U1066	156-0328-00			IC,DIGITAL:MOS,DRIVER;DUAL CLOCK DRIVER	27014	DS0026C (N OR J
A3U1110	156-1161-00			IC,LINEAR:BIPOLAR,VOLTAGE REGULATOR	04713	LM317T
A3VR1020	152-0166-00			DIODE,ZENER:,;6.2V,5%,0.4W	04713	SZ11738RL
A3VR1062	152-0168-00			DIODE,ZENER:,;12V,5%,0.4W	04713	1N963BRL
A3W1021	131-0566-00			BUS,CONDUCTOR:DUMMY RES,0.094 OD X 0.225L	24546	OMA0207
A3W1022	131-0566-00			BUS,CONDUCTOR:DUMMY RES,0.094 OD X 0.225L	24546	OMA0207
A3W1050	131-0566-00			BUS,CONDUCTOR:DUMMY RES,0.094 OD X 0.225L	24546	OMA0207
A3W1060	131-0566-00			BUS,CONDUCTOR:DUMMY RES,0.094 OD X 0.225L	24546	OMA0207
A3W1102	131-0566-00			BUS,CONDUCTOR:DUMMY RES,0.094 OD X 0.225L	24546	OMA0207

Component Number	Tektronix Part No.	Serial No. Effective	Dscont	Name & Description	Mfr. Code	Mfr. Part No.
A4	670-9493-02	B010100	B049999	CIRCUIT BD ASSY:READOUT	80009	670949302
A4C2830	281-0909-00			CAP,FXD,CER DI:0.022UF,20%,50V	04222	SA105C223MAA
A4C2835	281-0909-00			CAP,FXD,CER DI:0.022UF,20%,50V	04222	SA105C223MAA
A4C2851	281-0909-00			CAP,FXD,CER DI:0.022UF,20%,50V	04222	SA105C223MAA
A4C2855	281-0909-00			CAP,FXD,CER DI:0.022UF,20%,50V	04222	SA105C223MAA
A4C2860	281-0909-00			CAP,FXD,CER DI:0.022UF,20%,50V	04222	SA105C223MAA
A4C2885	281-0909-00			CAP,FXD,CER DI:0.022UF,20%,50V	04222	SA105C223MAA
A4C2901	281-0909-00			CAP,FXD,CER DI:0.022UF,20%,50V	04222	SA105C223MAA
A4C2911	281-0773-00			CAP,FXD,CER DI:0.01UF,10%,100V	TK1743	CGB103KEX
A4C2912	281-0909-00			CAP,FXD,CER DI:0.022UF,20%,50V	04222	SA105C223MAA
A4C2913	281-0909-00			CAP,FXD,CER DI:0.022UF,20%,50V	04222	SA105C223MAA
A4C2926	281-0909-00			CAP,FXD,CER DI:0.022UF,20%,50V	04222	SA105C223MAA
A4C2940	281-0909-00			CAP,FXD,CER DI:0.022UF,20%,50V	04222	SA105C223MAA
A4C2950	281-0909-00			CAP,FXD,CER DI:0.022UF,20%,50V	04222	SA105C223MAA
A4C2960	281-0909-00			CAP,FXD,CER DI:0.022UF,20%,50V	04222	SA105C223MAA
A4C2970	281-0909-00			CAP,FXD,CER DI:0.022UF,20%,50V	04222	SA105C223MAA
A4C2980	281-0909-00			CAP,FXD,CER DI:0.022UF,20%,50V	04222	SA105C223MAA
A4C2990	281-0909-00			CAP,FXD,CER DI:0.022UF,20%,50V	04222	SA105C223MAA
A4R2805	313-1472-00			RES,FXD,FILM:4.7K OHM,5%,0.2W	91637	CCF50-2-47000J
A4R2830	313-1101-00			RES,FXD,FILM:100 OHM,5%,0.2W	91637	CCF50-2-100R0J
A4R2841	313-1103-00			RES,FXD,FILM:10K OHM,5%,0.2W	91637	CCF50-2-10001J
A4R2842	313-1103-00			RES,FXD,FILM:10K OHM,5%,0.2W	91637	CCF50-2-10001J
A4R2843	313-1472-00			RES,FXD,FILM:4.7K OHM,5%,0.2W	91637	CCF50-2-47000J
A4R2844	313-1472-00			RES,FXD,FILM:4.7K OHM,5%,0.2W	91637	CCF50-2-47000J
A4R2850	313-1472-00			RES,FXD,FILM:4.7K OHM,5%,0.2W	91637	CCF50-2-47000J
A4R2901	313-1103-00			RES,FXD,FILM:10K OHM,5%,0.2W	91637	CCF50-2-10001J
A4R2902	313-1103-00			RES,FXD,FILM:10K OHM,5%,0.2W	91637	CCF50-2-10001J
A4R2903	321-1296-03			RES,FXD,FILM:12.0K OHM,0.25%,0.125W,TC=T2	19701	5033RC12K00C
A4R2905	321-0816-03			RES,FXD,FILM:5K OHM,0.25%,0.125W,TC=T2	TK1727	MPR24-2322-141
A4R2910	321-0685-00			RES,FXD,FILM:30K OHM,0.5%,0.125W,TC=T2	19701	5033RC30K00D
A4R2911	321-0685-00			RES,FXD,FILM:30K OHM,0.5%,0.125W,TC=T2	19701	5033RC30K00D
A4R2912	313-1102-00			RES,FXD,FILM:1K OHM,5%,0.2W	91637	CCF50-2-10000J
A4R2913	321-0198-00			RES,FXD,FILM:1.13K OHM,1%,0.125W,TC=T0	91637	CMF55116G11300F
A4R2914	322-3306-00			RES,FXD:METAL FILM;15K OHM,1%,0.2W,TC=100	91637	CCF50-2-G1502F
A4R2915	313-1202-00			RES,FXD,FILM:2K OHM,5%,0.2W	91637	CCF50-2-20000J
A4R2916	322-3414-00			RES,FXD:METAL FILM;200K OHM,1%,0.2W,TC=100	91637	CCF501G20002F
A4R2917	322-3385-00			RES,FXD:METAL FILM;100K OHM,1%,0.2W,TC=100	91637	CCF501G10002F
A4R2918	311-2270-00			RES,VAR,TRMR:CERMET;10K OHM,20%,0.5W	TK2073	GF06VT2 103 M L
A4R2919	321-0756-00			RES,FXD,FILM:50K OHM,1%,0.125W,TC=T0	91637	CMF55116G50001F
A4R2920	313-1334-00			RES,FXD,FILM:330K OHM,5%,0.2W	91637	CCF502-33002J

Component Number	Tektronix Part No.	Serial No. Effective	Dscont	Name & Description	Mfr. Code	Mfr. Part No.
A4R2921	322-3297-00			RES,FXD:METAL FILM;12.1K OHM,1%,0.2W,TC=100	91637	CCF501G12101F
A4R2922	321-0756-00			RES,FXD,FILM:50K OHM,1%,0.125W,TC=T0	91637	CMF55116G50001F
A4R2923	321-0385-00			RES,FXD,FILM:100K OHM,1%,0.125W,TC=T0	91637	CMF55116G10002F
A4R2924	322-3414-00			RES,FXD:METAL FILM;200K OHM,1%,0.2W,TC=100	91637	CCF501G20002F
A4R2925	321-0235-02			RES,FXD,FILM:2.74K OHM,0.5%,0.125W,TC=T2	19701	5033RC2K740D
A4R2926	322-3222-00	B010100	B010293	RES,FXD:METAL FILM;2K OHM,1%,0.2W,TC=100	91637	CCF501G20000F
A4R2926	322-3210-00	B010294		RES,FXD:METAL FILM;1.5K OHM,1%,0.2W,TC=100	91637	CCF501G15000F
A4R2927	322-3318-00			RES,FXD:METAL FILM;20K OHM,1%,0.2W,TC=100	91637	CCF501G20001F
A4R2928	313-1472-00			RES,FXD,FILM:4.7K OHM,5%,0.2W	91637	CCF50-2-47000J
A4R2929	313-1472-00			RES,FXD,FILM:4.7K OHM,5%,0.2W	91637	CCF50-2-47000J
A4R2930	313-1152-00			RES,FXD,FILM:1.5K OHM,5%,0.2W	91637	CCF50-2-15000J
A4R2931	311-2258-00	B010100	B010293	RES,VAR,TRMR:CERMET;1K OHM,20%,0.5W	TK2073	GF06V2 102 M L2
A4R2931	311-2270-00	B010294		RES,VAR,TRMR:CERMET;10K OHM,20%,0.5W	TK2073	GF06VT2 103 M L
A4R2932	322-3414-00			RES,FXD:METAL FILM;200K OHM,1%,0.2W,TC=100	91637	CCF501G20002F
A4R2933	322-3385-00			RES,FXD:METAL FILM;100K OHM,1%,0.2W,TC=100	91637	CCF501G10002F
A4R2934	322-3297-00			RES,FXD:METAL FILM;12.1K OHM,1%,0.2W,TC=100	91637	CCF501G12101F
A4R2940	313-1102-00			RES,FXD,FILM:1K OHM,5%,0.2W	91637	CCF50-2-10000J
A4R2945	313-1471-00			RES,FXD,FILM:470 OHM,5%,0.2W	91637	CCF50-2-470R0J
A4R2975	313-1472-00			RES,FXD,FILM:4.7K OHM,5%,0.2W	91637	CCF50-2-47000J
A4R2985	313-1102-00			RES,FXD,FILM:1K OHM,5%,0.2W	91637	CCF50-2-10000J
A4U2800	156-0514-00			IC,MISC:CMOS,ANALOG MUX;DUAL 4 CHANNEL	04713	MC14052BCP
A4U2805	156-0514-00			IC,MISC:CMOS,ANALOG MUX;DUAL 4 CHANNEL	04713	MC14052BCP
A4U2810	156-0382-00			IC,DIGITAL:LSTTL,GATE;QUAD 2-INPUT NAND	01295	SN74LS00N
A4U2820	156-1191-01			IC,LINEAR:BIFET,OP-AMP;6MV VOS	01295	TL072ACP
A4U2830	156-1172-00			IC,DIGITAL:LSTTL,COUNTER;DUAL 4-BIT BINARY	01295	SN74LS393N
A4U2835	156-0479-00			IC,DIGITAL:LSTTL,GATES;QUAD 2-INPUT OR	01295	SN74LS32N
A4U2850	156-0388-00			IC,DIGITAL:LSTTL,FLIP FLOP;DUAL D W/SET	01295	SN74LS74AN
A4U2855	156-0383-00			IC,DIGITAL:LSTTL,GATES;QUAD 2-INPUT NOR	01295	SN74LS02N
A4U2860	156-0975-00			IC,DIGITAL:LSTTL,SHIFT REGISTER;8-BIT	01295	SN74LS299
A4U2865	156-0796-00			IC,DIGITAL:CMOS,SHIFT REGISTER;8-STAGE	04713	MC14094BCP
A4U2870	156-1172-01			IC,DIGITAL:LSTTL,COUNTER	01295	SN74LS393N
A4U2880	156-0388-00			IC,DIGITAL:LSTTL,FLIP FLOP;DUAL D W/SET	01295	SN74LS74AN
A4U2885	156-0386-00			IC,DIGITAL:LSTTL,GATES;TRIPLE 3-INPUT NAND	01295	SN74LS10N
A4U2890	156-0382-00			IC,DIGITAL:LSTTL,GATE;QUAD 2-INPUT NAND	01295	SN74LS00N
A4U2900	156-0386-00			IC,DIGITAL:LSTTL,GATES;TRIPLE 3-INPUT NAND	01295	SN74LS10N
A4U2905	156-1702-00			IC,DIGITAL:TTL,REGISTER;10-BIT BUFFERED	34335	AM29821PC
A4U2910	156-1555-00			IC,CONVERTER:BIPOLAR,D/A;8 BIT,200NS	34335	AM6080PC
A4U2920	156-1594-00			IC,MEMORY:NMOS,SRAM;2K X 8,150NS	0B0A9	DS2016
A4U2930	160-1631-02			MICROCKT,DGTL:4096 X 8 EPROM,PRGM	80009	160-1631-02
A4U2935	156-0956-00			IC,DIGITAL:LSTTL,BUFFER/DRIVER;OCTAL	01295	SN74LS244N3

Component Number	Tektronix Part No.	Serial No. Effective	Dscont	Name & Description	Mfr. Code	Mfr. Part No.
A4U2940	156-1172-00			IC,DIGITAL:LSTTL,COUNTER;DUAL 4-BIT BINARY	01295	SN74LS393N
A4U2950	156-0388-00			IC,DIGITAL:LSTTL,FLIP FLOP;DUAL D W/SET	01295	SN74LS74AN
A4U2960	156-0796-00			IC,DIGITAL:CMOS,SHIFT REGISTER;8-STAGE	04713	MC14094BCP
A4U2965	156-0382-00			IC,DIGITAL:LSTTL,GATE;QUAD 2-INPUT NAND	01295	SN74LS00N
A4U2970	156-0480-00			IC,DIGITAL:LSTTL,GATES;QUAD 2-INPUT AND	01295	SN74LS08N
A4U2980	156-0382-00			IC,DIGITAL:LSTTL,GATE;QUAD 2-INPUT NAND	01295	SN74LS00N
A4U2985	156-0768-01			IC,DIGITAL:LSTTL,SHIFT REGISTER;4-BIT	01295	SN74LS194A
A4U2990	156-0381-00			IC,DIGITAL:LSTTL,GATES;QUAD 2-INPUT	01295	SN74LS86AN
A4U2995	156-0651-00			IC,DIGITAL:LSTTL,SHIFT REGISTER;8-BIT SIPO	01295	SN74LS164N
A4VR2805	152-0217-00			DIODE,ZENER:,;8.2V,5%,0.4W	04713	SZG20RL
A4VR2925	152-0662-00			DIODE,ZENER:,;5V,1%,0.4W	04713	SZG195RL
A4W411	175-4581-01			CA ASSY,SP,ELEC:26,28 AWG,2.25 L,RIBBON	53387	ORDER BY DESC
A4W2851	131-0566-00			BUS,CONDUCTOR:DUMMY RES,0.094 OD X 0.225L	24546	OMA0207
A4W2913	131-0566-00			BUS,CONDUCTOR:DUMMY RES,0.094 OD X 0.225L	24546	OMA0207

Component Number	Tektronix Part No.	Serial No. Effective	Dscont	Name & Description	Mfr. Code	Mfr. Part No.
A5	670-9052-02	B010100	B049999	CIRCUIT BD ASSY:DIGITAL CONTROL	80009	670905202
A5BT2570	146-0049-00			BATTERY,STORAGE:3.5V,750MAH	81855	LTC-7P
A5C2010	290-0943-02			CAP,FXD,ELCTLT:47UF,20%,25V	1W344	SME25VB47RM5X11
A5C2011	290-0943-02			CAP,FXD,ELCTLT:47UF,20%,25V	1W344	SME25VB47RM5X11
A5C2101	281-0909-00			CAP,FXD,CER DI:0.022UF,20%,50V	04222	SA105C223MAA
A5C2110	281-0814-00			CAP,FXD,CER DI:100 PF,10%,100V	TK1743	CGB101KEN
A5C2111	281-0909-00			CAP,FXD,CER DI:0.022UF,20%,50V	04222	SA105C223MAA
A5C2112	281-0909-00			CAP,FXD,CER DI:0.022UF,20%,50V	04222	SA105C223MAA
A5C2113	290-0943-02			CAP,FXD,ELCTLT:47UF,20%,25V	1W344	SME25VB47RM5X11
A5C2160	281-0909-00			CAP,FXD,CER DI:0.022UF,20%,50V	04222	SA105C223MAA
A5C2220	281-0909-00			CAP,FXD,CER DI:0.022UF,20%,50V	04222	SA105C223MAA
A5C2221	281-0909-00			CAP,FXD,CER DI:0.022UF,20%,50V	04222	SA105C223MAA
A5C2230	281-0909-00			CAP,FXD,CER DI:0.022UF,20%,50V	04222	SA105C223MAA
A5C2240	281-0909-00			CAP,FXD,CER DI:0.022UF,20%,50V	04222	SA105C223MAA
A5C2320	281-0909-00			CAP,FXD,CER DI:0.022UF,20%,50V	04222	SA105C223MAA
A5C2321	285-1301-01			CAP,FXD,MTLZD:0.47UF,10%,50V	TK1913	MKS 2 .47/50
A5C2322	285-1348-00			CAP,FXD,MTLZD:0.22UF,10%,63V	TK1913	MKS2 0.22 MFD 1
A5C2330	285-1301-01			CAP,FXD,MTLZD:0.47UF,10%,50V	TK1913	MKS 2 .47/50
A5C2331	285-1348-00			CAP,FXD,MTLZD:0.22UF,10%,63V	TK1913	MKS2 0.22 MFD 1
A5C2332	285-1300-01			CAP,FXD,MTLZD:0.1UF,10%,63V	TK1913	MKS2 0.1/63/10
A5C2333	285-1300-01			CAP,FXD,MTLZD:0.1UF,10%,63V	TK1913	MKS2 0.1/63/10
A5C2340	281-0909-00			CAP,FXD,CER DI:0.022UF,20%,50V	04222	SA105C223MAA
A5C2350	290-0527-00			CAP,FXD,ELCTLT:15UF,20%,20V	D5243	ETP-3G 15UF 20V
A5C2351	281-0909-00			CAP,FXD,CER DI:0.022UF,20%,50V	04222	SA105C223MAA
A5C2360	281-0909-00			CAP,FXD,CER DI:0.022UF,20%,50V	04222	SA105C223MAA
A5C2420	290-0943-02			CAP,FXD,ELCTLT:47UF,20%,25V	1W344	SME25VB47RM5X11
A5C2421	285-1300-01			CAP,FXD,MTLZD:0.1UF,10%,63V	TK1913	MKS2 0.1/63/10
A5C2422	281-0791-00			CAP,FXD,CER DI:270PF,10%,100V	04222	SA102C271KAA
A5C2430	285-1301-01			CAP,FXD,MTLZD:0.47UF,10%,50V	TK1913	MKS 2 .47/50
A5C2431	285-1348-00			CAP,FXD,MTLZD:0.22UF,10%,63V	TK1913	MKS2 0.22 MFD 1
A5C2432	285-1348-00			CAP,FXD,MTLZD:0.22UF,10%,63V	TK1913	MKS2 0.22 MFD 1
A5C2450	281-0909-00			CAP,FXD,CER DI:0.022UF,20%,50V	04222	SA105C223MAA
A5C2470	290-0527-00			CAP,FXD,ELCTLT:15UF,20%,20V	D5243	ETP-3G 15UF 20V
A5C2501	281-0909-00			CAP,FXD,CER DI:0.022UF,20%,50V	04222	SA105C223MAA
A5C2510	281-0909-00			CAP,FXD,CER DI:0.022UF,20%,50V	04222	SA105C223MAA
A5C2511	281-0791-00			CAP,FXD,CER DI:270PF,10%,100V	04222	SA102C271KAA
A5C2520	281-0909-00			CAP,FXD,CER DI:0.022UF,20%,50V	04222	SA105C223MAA
A5C2521	281-0909-00			CAP,FXD,CER DI:0.022UF,20%,50V	04222	SA105C223MAA
A5C2530	281-0909-00			CAP,FXD,CER DI:0.022UF,20%,50V	04222	SA105C223MAA
A5C2550	281-0819-00			CAP,FXD,CER DI:33 PF,5%,50V	04222	SA102A330JAA

Component Number	Tektronix Part No.	Serial No. Effective	Dscont	Name & Description	Mfr. Code	Mfr. Part No.
A5C2551	281-0816-00			CAP,FXD,CER DI:82 PF,5%,100V	TK1743	CGB820JEN
A5C2552	281-0909-00			CAP,FXD,CER DI:0.022UF,20%,50V	04222	SA105C223MAA
A5C2601	281-0909-00			CAP,FXD,CER DI:0.022UF,20%,50V	04222	SA105C223MAA
A5C2610	281-0909-00			CAP,FXD,CER DI:0.022UF,20%,50V	04222	SA105C223MAA
A5C2620	281-0909-00			CAP,FXD,CER DI:0.022UF,20%,50V	04222	SA105C223MAA
A5C2621	285-1300-01			CAP,FXD,MTLZD:0.1UF,10%,63V	TK1913	MKS2 0.1/63/10
A5C2622	285-1348-00			CAP,FXD,MTLZD:0.22UF,10%,63V	TK1913	MKS2 0.22 MFD 1
A5C2630	285-1300-01			CAP,FXD,MTLZD:0.1UF,10%,63V	TK1913	MKS2 0.1/63/10
A5C2631	285-1348-00			CAP,FXD,MTLZD:0.22UF,10%,63V	TK1913	MKS2 0.22 MFD 1
A5C2632	281-0909-00			CAP,FXD,CER DI:0.022UF,20%,50V	04222	SA105C223MAA
A5C2640	285-1300-01			CAP,FXD,MTLZD:0.1UF,10%,63V	TK1913	MKS2 0.1/63/10
A5C2650	281-0909-00			CAP,FXD,CER DI:0.022UF,20%,50V	04222	SA105C223MAA
A5C2660	281-0909-00			CAP,FXD,CER DI:0.022UF,20%,50V	04222	SA105C223MAA
A5C2720	285-1301-01			CAP,FXD,MTLZD:0.47UF,10%,50V	TK1913	MKS 2 .47/50
A5C2721	285-1348-00			CAP,FXD,MTLZD:0.22UF,10%,63V	TK1913	MKS2 0.22 MFD 1
A5C2730	285-1348-00			CAP,FXD,MTLZD:0.22UF,10%,63V	TK1913	MKS2 0.22 MFD 1
A5C2731	285-1301-01			CAP,FXD,MTLZD:0.47UF,10%,50V	TK1913	MKS 2 .47/50
A5C2732	285-1301-01			CAP,FXD,MTLZD:0.47UF,10%,50V	TK1913	MKS 2 .47/50
A5C2733	285-1301-01			CAP,FXD,MTLZD:0.47UF,10%,50V	TK1913	MKS 2 .47/50
A5C2740	281-0909-00			CAP,FXD,CER DI:0.022UF,20%,50V	04222	SA105C223MAA
A5C2800	281-0812-00			CAP,FXD,CER DI:1000PF,10%,100V	04222	SA101C102KAA
A5CR2070	152-0141-02			DIODE,SIG:,ULTRA FAST;40V,150MA,4NS,2PF	27014	FDH9427
A5CR2071	152-0141-02			DIODE,SIG:,ULTRA FAST;40V,150MA,4NS,2PF	27014	FDH9427
A5CR2170	152-0141-02			DIODE,SIG:,ULTRA FAST;40V,150MA,4NS,2PF	27014	FDH9427
A5CR2230	152-0141-02			DIODE,SIG:,ULTRA FAST;40V,150MA,4NS,2PF	27014	FDH9427
A5CR2231	152-0141-02			DIODE,SIG:,ULTRA FAST;40V,150MA,4NS,2PF	27014	FDH9427
A5CR2232	152-0141-02			DIODE,SIG:,ULTRA FAST;40V,150MA,4NS,2PF	27014	FDH9427
A5CR2233	152-0141-02			DIODE,SIG:,ULTRA FAST;40V,150MA,4NS,2PF	27014	FDH9427
A5CR2370	152-0951-00			DIODE,SIG:SCHTKY,;60V,2.25PF	50088	1N6263
A5CR2371	152-0951-00			DIODE,SIG:SCHTKY,;60V,2.25PF	50088	1N6263
A5CR2420	152-0141-02			DIODE,SIG:,ULTRA FAST;40V,150MA,4NS,2PF	27014	FDH9427
A5CR2610	152-0141-02			DIODE,SIG:,ULTRA FAST;40V,150MA,4NS,2PF	27014	FDH9427
A5CR2620	152-0141-02			DIODE,SIG:,ULTRA FAST;40V,150MA,4NS,2PF	27014	FDH9427
A5CR2621	152-0141-02			DIODE,SIG:,ULTRA FAST;40V,150MA,4NS,2PF	27014	FDH9427
A5CR2622	152-0141-02			DIODE,SIG:,ULTRA FAST;40V,150MA,4NS,2PF	27014	FDH9427
A5CR2630	152-0141-02			DIODE,SIG:,ULTRA FAST;40V,150MA,4NS,2PF	27014	FDH9427
A5CR2631	152-0141-02			DIODE,SIG:,ULTRA FAST;40V,150MA,4NS,2PF	27014	FDH9427
A5CR2640	152-0141-02			DIODE,SIG:,ULTRA FAST;40V,150MA,4NS,2PF	27014	FDH9427
A5CR2770	152-0951-00			DIODE,SIG:SCHTKY,;60V,2.25PF	50088	1N6263
A5J251	131-3360-00			CONN,HDR:PCB,;MALE,STR,2 X 10,0.1 CTR	53387	2520-6002UB

Component Number	Tektronix Part No.	Serial No. Effective	Dscont	Name & Description	Mfr. Code	Mfr. Part No.
A5J500	131-3364-00			CONN,HDR:PCB,;MALE,STR,2 X 17,0.1 CTR	53387	2534-6002UB
A5J501	131-0608-00			TERMINAL,PIN:PRESSFIT/PCB,;MALE,STR (QUANTITY OF 3)	22526	48283-018
A5J503	131-0608-00			TERMINAL,PIN:PRESSFIT/PCB,;MALE,STR (QUANTITY OF 3)	22526	48283-018
A5J651	131-3360-00			CONN,HDR:PCB,;MALE,STR,2 X 10,0.1 CTR	53387	2520-6002UB
A5J652	131-3360-00			CONN,HDR:PCB,;MALE,STR,2 X 10,0.1 CTR	53387	2520-6002UB
A5Q2070	151-0341-00			TRANSISTOR,SIG:BIPOLAR,NPN;45V,50MA,40MHZ	04713	MPS6520
A5Q2170	151-0342-00			TRANSISTOR,SIG:BIPOLAR,PNP;60V,50MA,40MHZ	04713	MPS4249
A5Q2270	151-0342-00			TRANSISTOR,SIG:BIPOLAR,PNP;60V,50MA,40MHZ	04713	MPS4249
A5Q2320	151-0341-00			TRANSISTOR,SIG:BIPOLAR,NPN;45V,50MA,40MHZ	04713	MPS6520
A5R2001	313-1101-00			RES,FXD,FILM:100 OHM,5%,0.2W	91637	CCF50-2-100R0J
A5R2002	313-1101-00			RES,FXD,FILM:100 OHM,5%,0.2W	91637	CCF50-2-100R0J
A5R2004	313-1101-00			RES,FXD,FILM:100 OHM,5%,0.2W	91637	CCF50-2-100R0J
A5R2005	313-1101-00			RES,FXD,FILM:100 OHM,5%,0.2W	91637	CCF50-2-100R0J
A5R2006	313-1101-00			RES,FXD,FILM:100 OHM,5%,0.2W	91637	CCF50-2-100R0J
A5R2007	313-1101-00			RES,FXD,FILM:100 OHM,5%,0.2W	91637	CCF50-2-100R0J
A5R2010	311-2234-00			RES,VAR,TRMR:CERMET;5K OHM,20%,0.5W	TK2073	GF06UT2 502 M L
A5R2011	322-3431-00			RES,FXD,FILM:301K OHM,1%,0.2W,TC=T0	91637	CCF501G30102F
A5R2012	322-3289-02			RES,FXD,FILM:10K OHM,0.5%,0.2W,TC=T2	91637	CCF501D10001D
A5R2013	322-3289-02			RES,FXD,FILM:10K OHM,0.5%,0.2W,TC=T2	91637	CCF501D10001D
A5R2070	313-1512-00			RES,FXD,FILM:5.1K OHM,5%,0.2W	91637	CCF50-2-51000J
A5R2101	313-1101-00			RES,FXD,FILM:100 OHM,5%,0.2W	91637	CCF50-2-100R0J
A5R2102	313-1101-00			RES,FXD,FILM:100 OHM,5%,0.2W	91637	CCF50-2-100R0J
A5R2103	313-1101-00			RES,FXD,FILM:100 OHM,5%,0.2W	91637	CCF50-2-100R0J
A5R2104	313-1101-00			RES,FXD,FILM:100 OHM,5%,0.2W	91637	CCF50-2-100R0J
A5R2110	313-1103-00			RES,FXD,FILM:10K OHM,5%,0.2W	91637	CCF50-2-10001J
A5R2170	322-3235-00			RES,FXD:METAL FILM;2.74K OHM,1%,0.2W,TC=100	91637	CCF501G27400F
A5R2171	313-1102-00			RES,FXD,FILM:1K OHM,5%,0.2W	91637	CCF50-2-10000J
A5R2172	313-1102-00			RES,FXD,FILM:1K OHM,5%,0.2W	91637	CCF50-2-10000J
A5R2201	313-1103-00			RES,FXD,FILM:10K OHM,5%,0.2W	91637	CCF50-2-10001J
A5R2202	313-1103-00			RES,FXD,FILM:10K OHM,5%,0.2W	91637	CCF50-2-10001J
A5R2203	313-1103-00			RES,FXD,FILM:10K OHM,5%,0.2W	91637	CCF50-2-10001J
A5R2204	313-1103-00			RES,FXD,FILM:10K OHM,5%,0.2W	91637	CCF50-2-10001J
A5R2205	313-1103-00			RES,FXD,FILM:10K OHM,5%,0.2W	91637	CCF50-2-10001J
A5R2206	313-1103-00			RES,FXD,FILM:10K OHM,5%,0.2W	91637	CCF50-2-10001J
A5R2220	313-1681-00			RES,FXD,FILM:680 OHM,5%,0.2W	91637	CCF50-2-680R0J
A5R2230	322-3482-02			RES,FXD,FILM:14.2K OHM,5%,0.2W,TC=T0	91637	CCF501D14201D
A5R2231	313-1102-00			RES,FXD,FILM:1K OHM,5%,0.2W	91637	CCF50-2-10000J
A5R2232	313-1102-00			RES,FXD,FILM:1K OHM,5%,0.2W	91637	CCF50-2-10000J
A5R2241	313-1104-00			RES,FXD,FILM:100K OHM,5%,0.2W	91637	CCF50-2-10002J

Component Number	Tektronix Part No.	Serial No. Effective	Dscont	Name & Description	Mfr. Code	Mfr. Part No.
A5R2242	313-1104-00			RES,FXD,FILM:100K OHM,5%,0.2W	91637	CCF50-2-10002J
A5R2244	313-1103-00			RES,FXD,FILM:10K OHM,5%,0.2W	91637	CCF50-2-10001J
A5R2250	313-1102-00			RES,FXD,FILM:1K OHM,5%,0.2W	91637	CCF50-2-10000J
A5R2251	313-1102-00			RES,FXD,FILM:1K OHM,5%,0.2W	91637	CCF50-2-10000J
A5R2301	313-1103-00			RES,FXD,FILM:10K OHM,5%,0.2W	91637	CCF50-2-10001J
A5R2302	313-1103-00			RES,FXD,FILM:10K OHM,5%,0.2W	91637	CCF50-2-10001J
A5R2303	313-1103-00			RES,FXD,FILM:10K OHM,5%,0.2W	91637	CCF50-2-10001J
A5R2304	313-1103-00			RES,FXD,FILM:10K OHM,5%,0.2W	91637	CCF50-2-10001J
A5R2305	313-1103-00			RES,FXD,FILM:10K OHM,5%,0.2W	91637	CCF50-2-10001J
A5R2306	313-1103-00			RES,FXD,FILM:10K OHM,5%,0.2W	91637	CCF50-2-10001J
A5R2320	313-1203-00			RES,FXD,FILM:20K OHM,5%,0.2W	91637	CCF50-2-20001J
A5R2330	322-3360-02			RES,FXD,FILM:54.9K OHM,0.5%,0.2W,TC=T2	91637	CCF501D54901D
A5R2331	322-3235-00			RES,FXD:METAL FILM;2.74K OHM,1%,0.2W,TC=100	91637	CCF501G27400F
A5R2332	322-3193-00			RES,FXD:METAL FILM;1K OHM,1%,0.2W,TC=100	91637	CCF501G10000F
A5R2333	322-3235-00			RES,FXD:METAL FILM;2.74K OHM,1%,0.2W,TC=100	91637	CCF501G27400F
A5R2334	322-3193-00			RES,FXD:METAL FILM;1K OHM,1%,0.2W,TC=100	91637	CCF501G10000F
A5R2340	313-1103-00			RES,FXD,FILM:10K OHM,5%,0.2W	91637	CCF50-2-10001J
A5R2341	313-1103-00			RES,FXD,FILM:10K OHM,5%,0.2W	91637	CCF50-2-10001J
A5R2342	313-1103-00			RES,FXD,FILM:10K OHM,5%,0.2W	91637	CCF50-2-10001J
A5R2343	313-1104-00			RES,FXD,FILM:100K OHM,5%,0.2W	91637	CCF50-2-10002J
A5R2344	313-1104-00			RES,FXD,FILM:100K OHM,5%,0.2W	91637	CCF50-2-10002J
A5R2345	313-1102-00			RES,FXD,FILM:1K OHM,5%,0.2W	91637	CCF50-2-10000J
A5R2346	313-1103-00			RES,FXD,FILM:10K OHM,5%,0.2W	91637	CCF50-2-10001J
A5R2370	313-1102-00			RES,FXD,FILM:1K OHM,5%,0.2W	91637	CCF50-2-10000J
A5R2401	313-1103-00			RES,FXD,FILM:10K OHM,5%,0.2W	91637	CCF50-2-10001J
A5R2402	313-1103-00			RES,FXD,FILM:10K OHM,5%,0.2W	91637	CCF50-2-10001J
A5R2403	313-1103-00			RES,FXD,FILM:10K OHM,5%,0.2W	91637	CCF50-2-10001J
A5R2404	313-1103-00			RES,FXD,FILM:10K OHM,5%,0.2W	91637	CCF50-2-10001J
A5R2405	313-1104-00			RES,FXD,FILM:100K OHM,5%,0.2W	91637	CCF50-2-10002J
A5R2406	313-1104-00			RES,FXD,FILM:100K OHM,5%,0.2W	91637	CCF50-2-10002J
A5R2407	313-1103-00			RES,FXD,FILM:10K OHM,5%,0.2W	91637	CCF50-2-10001J
A5R2408	313-1103-00			RES,FXD,FILM:10K OHM,5%,0.2W	91637	CCF50-2-10001J
A5R2409	313-1103-00			RES,FXD,FILM:10K OHM,5%,0.2W	91637	CCF50-2-10001J
A5R2410	313-1104-00			RES,FXD,FILM:100K OHM,5%,0.2W	91637	CCF50-2-10002J
A5R2411	313-1103-00			RES,FXD,FILM:10K OHM,5%,0.2W	91637	CCF50-2-10001J
A5R2412	313-1104-00			RES,FXD,FILM:100K OHM,5%,0.2W	91637	CCF50-2-10002J
A5R2413	313-1103-00			RES,FXD,FILM:10K OHM,5%,0.2W	91637	CCF50-2-10001J
A5R2414	313-1103-00			RES,FXD,FILM:10K OHM,5%,0.2W	91637	CCF50-2-10001J
A5R2415	313-1103-00			RES,FXD,FILM:10K OHM,5%,0.2W	91637	CCF50-2-10001J
A5R2416	313-1103-00			RES,FXD,FILM:10K OHM,5%,0.2W	91637	CCF50-2-10001J

Component Number	Tektronix Part No.	Serial No. Effective	Dscont	Name & Description	Mfr. Code	Mfr. Part No.
A5R2417	313-1103-00			RES,FXD,FILM:10K OHM,5%,0.2W	91637	CCF50-2-10001J
A5R2420	313-1103-00			RES,FXD,FILM:10K OHM,5%,0.2W	91637	CCF50-2-10001J
A5R2421	322-3300-02			RES,FXD,FILM:13K OHM,0.5%,0.2W,TC=T2	91637	CCF501D13001D
A5R2422	322-3482-02			RES,FXD,FILM:14.2K OHM,5%,0.2W,TC=T0	91637	CCF501D14201D
A5R2430	322-3289-02			RES,FXD,FILM:10K OHM,0.5%,0.2W,TC=T2	91637	CCF501D10001D
A5R2431	313-1101-00			RES,FXD,FILM:100 OHM,5%,0.2W	91637	CCF50-2-100R0J
A5R2432	322-3325-00			RES,FXD,FILM:23.7K OHM,1%,0.2W,TC=T0	91637	CCF501G23701F
A5R2433	322-3289-02			RES,FXD,FILM:10K OHM,0.5%,0.2W,TC=T2	91637	CCF501D10001D
A5R2434	322-3289-02			RES,FXD,FILM:10K OHM,0.5%,0.2W,TC=T2	91637	CCF501D10001D
A5R2440	313-1104-00			RES,FXD,FILM:100K OHM,5%,0.2W	91637	CCF50-2-10002J
A5R2441	313-1104-00			RES,FXD,FILM:100K OHM,5%,0.2W	91637	CCF50-2-10002J
A5R2442	313-1104-00			RES,FXD,FILM:100K OHM,5%,0.2W	91637	CCF50-2-10002J
A5R2443	313-1103-00			RES,FXD,FILM:10K OHM,5%,0.2W	91637	CCF50-2-10001J
A5R2444	313-1103-00			RES,FXD,FILM:10K OHM,5%,0.2W	91637	CCF50-2-10001J
A5R2470	313-1681-00			RES,FXD,FILM:680 OHM,5%,0.2W	91637	CCF50-2-680ROJ
A5R2471	313-1681-00			RES,FXD,FILM:680 OHM,5%,0.2W	91637	CCF50-2-680ROJ
A5R2500	313-1331-00			RES,FXD,FILM:330 OHM,5%,0.2W	91637	CCF50-2-330ROJ
A5R2501	313-1103-00			RES,FXD,FILM:10K OHM,5%,0.2W	91637	CCF50-2-10001J
A5R2502	313-1103-00			RES,FXD,FILM:10K OHM,5%,0.2W	91637	CCF50-2-10001J
A5R2503	313-1103-00			RES,FXD,FILM:10K OHM,5%,0.2W	91637	CCF50-2-10001J
A5R2504	313-1103-00			RES,FXD,FILM:10K OHM,5%,0.2W	91637	CCF50-2-10001J
A5R2505	313-1103-00			RES,FXD,FILM:10K OHM,5%,0.2W	91637	CCF50-2-10001J
A5R2506	322-3235-00			RES,FXD:METAL FILM;2.74K OHM,1%,0.2W,TC=100	91637	CCF501G27400F
A5R2510	313-1103-00			RES,FXD,FILM:10K OHM,5%,0.2W	91637	CCF50-2-10001J
A5R2511	313-1102-00			RES,FXD,FILM:1K OHM,5%,0.2W	91637	CCF50-2-10000J
A5R2512	313-1102-00			RES,FXD,FILM:1K OHM,5%,0.2W	91637	CCF50-2-10000J
A5R2513	313-1103-00			RES,FXD,FILM:10K OHM,5%,0.2W	91637	CCF50-2-10001J
A5R2520	322-3177-02			RES,FXD,FILM:681 OHM,0.5%,0.2W,TC=T2	91637	CMF501D681ROD
A5R2521	322-3177-02			RES,FXD,FILM:681 OHM,0.5%,0.2W,TC=T2	91637	CMF501D681ROD
A5R2522	313-1103-00			RES,FXD,FILM:10K OHM,5%,0.2W	91637	CCF50-2-10001J
A5R2523	313-1683-00			RES,FXD,FILM:68K OHM,5%,0.2W	91637	CCF50-2-6800IJ
A5R2524	313-1683-00			RES,FXD,FILM:68K OHM,5%,0.2W	91637	CCF50-2-6800IJ
A5R2530	315-0106-00			RES,FXD,FILM:10M OHM,5%,0.25W	TK1727	SFR25 2322-181-
A5R2531	313-1101-00			RES,FXD,FILM:100 OHM,5%,0.2W	91637	CCF50-2-100R0J
A5R2532	313-1683-00			RES,FXD,FILM:68K OHM,5%,0.2W	91637	CCF50-2-6800IJ
A5R2533	322-3235-00			RES,FXD:METAL FILM;2.74K OHM,1%,0.2W,TC=100	91637	CCF501G27400F
A5R2534	322-3235-00			RES,FXD:METAL FILM;2.74K OHM,1%,0.2W,TC=100	91637	CCF501G27400F
A5R2535	322-3235-00			RES,FXD:METAL FILM;2.74K OHM,1%,0.2W,TC=100	91637	CCF501G27400F
A5R2536	313-1103-00			RES,FXD,FILM:10K OHM,5%,0.2W	91637	CCF50-2-10001J
A5R2537	313-1102-00			RES,FXD,FILM:1K OHM,5%,0.2W	91637	CCF50-2-10000J

Component Number	Tektronix Part No.	Serial No. Effective	Dscont	Name & Description	Mfr. Code	Mfr. Part No.
A5R2540	313-1103-00			RES,FXD,FILM:10K OHM,5%,0.2W	91637	CCF50-2-10001J
A5R2541	313-1102-00			RES,FXD,FILM:1K OHM,5%,0.2W	91637	CCF50-2-10000J
A5R2542	313-1103-00			RES,FXD,FILM:10K OHM,5%,0.2W	91637	CCF50-2-10001J
A5R2543	313-1102-00			RES,FXD,FILM:1K OHM,5%,0.2W	91637	CCF50-2-10000J
A5R2544	313-1681-00			RES,FXD,FILM:680 OHM,5%,0.2W	91637	CCF50-2-680ROJ
A5R2545	313-1331-00			RES,FXD,FILM:330 OHM,5%,0.2W	91637	CCF50-2-330ROJ
A5R2560	313-1222-00			RES,FXD,FILM:2.2K OHM,5%,0.2W	91637	CCF50-2-22000J
A5R2601	313-1331-00			RES,FXD,FILM:330 OHM,5%,0.2W	91637	CCF50-2-330ROJ
A5R2602	313-1103-00			RES,FXD,FILM:10K OHM,5%,0.2W	91637	CCF50-2-10001J
A5R2603	313-1103-00			RES,FXD,FILM:10K OHM,5%,0.2W	91637	CCF50-2-10001J
A5R2604	322-3193-00			RES,FXD:METAL FILM;1K OHM,1%,0.2W,TC=100	91637	CCF501G10000F
A5R2610	313-1103-00			RES,FXD,FILM:10K OHM,5%,0.2W	91637	CCF50-2-10001J
A5R2611	313-1104-00			RES,FXD,FILM:100K OHM,5%,0.2W	91637	CCF50-2-10002J
A5R2612	313-1512-00			RES,FXD,FILM:5.1K OHM,5%,0.2W	91637	CCF50-2-51000J
A5R2613	313-1103-00			RES,FXD,FILM:10K OHM,5%,0.2W	91637	CCF50-2-10001J
A5R2620	313-1103-00			RES,FXD,FILM:10K OHM,5%,0.2W	91637	CCF50-2-10001J
A5R2621	313-1222-00			RES,FXD,FILM:2.2K OHM,5%,0.2W	91637	CCF50-2-22000J
A5R2622	313-1101-00			RES,FXD,FILM:100 OHM,5%,0.2W	91637	CCF50-2-100R0J
A5R2623	313-1222-00			RES,FXD,FILM:2.2K OHM,5%,0.2W	91637	CCF50-2-22000J
A5R2624	313-1512-00			RES,FXD,FILM:5.1K OHM,5%,0.2W	91637	CCF50-2-51000J
A5R2630	322-3193-00			RES,FXD:METAL FILM;1K OHM,1%,0.2W,TC=100	91637	CCF501G10000F
A5R2631	322-3235-00			RES,FXD:METAL FILM;2.74K OHM,1%,0.2W,TC=100	91637	CCF501G27400F
A5R2632	322-3193-00			RES,FXD:METAL FILM;1K OHM,1%,0.2W,TC=100	91637	CCF501G10000F
A5R2640	313-1103-00			RES,FXD,FILM:10K OHM,5%,0.2W	91637	CCF50-2-10001J
A5R2641	313-1103-00			RES,FXD,FILM:10K OHM,5%,0.2W	91637	CCF50-2-10001J
A5R2642	313-1103-00			RES,FXD,FILM:10K OHM,5%,0.2W	91637	CCF50-2-10001J
A5R2643	313-1103-00			RES,FXD,FILM:10K OHM,5%,0.2W	91637	CCF50-2-10001J
A5R2644	313-1103-00			RES,FXD,FILM:10K OHM,5%,0.2W	91637	CCF50-2-10001J
A5R2645	313-1103-00			RES,FXD,FILM:10K OHM,5%,0.2W	91637	CCF50-2-10001J
A5R2660	313-1103-00			RES,FXD,FILM:10K OHM,5%,0.2W	91637	CCF50-2-10001J
A5R2661	313-1103-00			RES,FXD,FILM:10K OHM,5%,0.2W	91637	CCF50-2-10001J
A5R2701	313-1103-00			RES,FXD,FILM:10K OHM,5%,0.2W	91637	CCF50-2-10001J
A5R2702	313-1103-00			RES,FXD,FILM:10K OHM,5%,0.2W	91637	CCF50-2-10001J
A5R2703	313-1103-00			RES,FXD,FILM:10K OHM,5%,0.2W	91637	CCF50-2-10001J
A5R2704	313-1103-00			RES,FXD,FILM:10K OHM,5%,0.2W	91637	CCF50-2-10001J
A5R2705	313-1103-00			RES,FXD,FILM:10K OHM,5%,0.2W	91637	CCF50-2-10001J
A5R2706	313-1103-00			RES,FXD,FILM:10K OHM,5%,0.2W	91637	CCF50-2-10001J
A5R2707	313-1103-00			RES,FXD,FILM:10K OHM,5%,0.2W	91637	CCF50-2-10001J
A5R2708	313-1103-00			RES,FXD,FILM:10K OHM,5%,0.2W	91637	CCF50-2-10001J
A5R2709	313-1103-00			RES,FXD,FILM:10K OHM,5%,0.2W	91637	CCF50-2-10001J

Component Number	Tektronix Part No.	Serial No. Effective	Dscont	Name & Description	Mfr. Code	Mfr. Part No.
A5R2710	313-1103-00			RES,FXD,FILM:10K OHM,5%,0.2W	91637	CCF50-2-10001J
A5R2711	313-1103-00			RES,FXD,FILM:10K OHM,5%,0.2W	91637	CCF50-2-10001J
A5R2712	313-1103-00			RES,FXD,FILM:10K OHM,5%,0.2W	91637	CCF50-2-10001J
A5R2720	313-1103-00			RES,FXD,FILM:10K OHM,5%,0.2W	91637	CCF50-2-10001J
A5R2721	313-1203-00			RES,FXD,FILM:20K OHM,5%,0.2W	91637	CCF50-2-20001J
A5R2730	313-1203-00			RES,FXD,FILM:20K OHM,5%,0.2W	91637	CCF50-2-20001J
A5R2731	315-0107-00			RES,FXD,FILM:100M OHM,5%,0.25W	01121	CB1075
A5R2732	315-0107-00			RES,FXD,FILM:100M OHM,5%,0.25W	01121	CB1075
A5R2733	322-3235-00			RES,FXD:METAL FILM;2.74K OHM,1%,0.2W,TC=100	91637	CCF501G27400F
A5R2734	313-1102-00			RES,FXD,FILM:1K OHM,5%,0.2W	91637	CCF50-2-10000J
A5R2735	313-1102-00			RES,FXD,FILM:1K OHM,5%,0.2W	91637	CCF50-2-10000J
A5R2740	322-3193-00			RES,FXD:METAL FILM;1K OHM,1%,0.2W,TC=100	91637	CCF501G10000F
A5R2741	313-1101-00			RES,FXD,FILM:100 OHM,5%,0.2W	91637	CCF50-2-100R0J
A5R2742	313-1103-00			RES,FXD,FILM:10K OHM,5%,0.2W	91637	CCF50-2-10001J
A5R2770	313-1103-00			RES,FXD,FILM:10K OHM,5%,0.2W	91637	CCF50-2-10001J
A5TP2070	131-0608-00			TERMINAL,PIN:PRESSFIT/PCB,;MALE,STR	22526	48283-018
A5TP2420	131-0608-00			TERMINAL,PIN:PRESSFIT/PCB,;MALE,STR	22526	48283-018
A5TP2421	131-0608-00			TERMINAL,PIN:PRESSFIT/PCB,;MALE,STR	22526	48283-018
A5TP2701	131-0608-00			TERMINAL,PIN:PRESSFIT/PCB,;MALE,STR	22526	48283-018
A5U2101	156-1589-00			IC,CONVERTER:BIPOLAR,D/A;12 BIT,CURRENT	24355	DAC312-040P
A5U2140	156-1342-01			IC,PROCESSOR:NMOS,MICROPROCESSOR	04713	MC68B02P
A5U2160	160-5370-04	B010100	B010350	MICROCKT,DGTL:65536 X 8 EPROM,PRGM	80009	160-5370-04
A5U2160	160-5370-05	B010351	B010599	MICROCKT,DGTL:65536 X 8 EPROM,PRGM	80009	160537005
A5U2160	160-5370-08	B010600	B015247	MICROCKT,DGTL:65536 X 8 EPROM,PRGM27512	80009	160537008
A5U2160	160-5370-09	B015248	B015983	MICROCKT,DGTL:65536 X 8 EPROM,PRGM	80009	160537009
A5U2160	160-5370-11	B015984		MICROCKT,DGTL:65536 X 8 EPROM,PRGM (NOT PART OF CIRCUIT BOARD)	80009	160537011
A5U2201	156-0865-00			IC,DIGITAL:LSTTL,FLIP FLOP;OCTAL D-TYPE	01295	SN74LS273N
A5U2210	156-0391-00			IC,DIGITAL:LSTTL,FLIP FLOP;HEX D W/CLR	01295	SN74LS174N
A5U2220	156-0956-00			IC,DIGITAL:LSTTL,BUFFER/DRIVER;OCTAL	01295	SN74LS244N3
A5U2240	156-2396-00			IC,MISC:BIPOLAR,PWR SUPPLY SUPERVISOR	01295	TL7705 ACP
A5U2250	160-5061-00			IC,DIGITAL:CMOS,PLD;OTP,20G10,25NS,55MA	80009	160-5061-00
A5U2260	160-5371-04	B010100	B010350	MICROCKT,DGTL:65536 X 8 EPROM,PRGM	80009	160-5371-04
A5U2260	160-5371-05	B010351	B010599	MICROCKT,DGTL:65536 X 8 EPROM,PRGM	80009	160537105
A5U2260	160-5371-08	B010600	B015247	MICROCKT,DGTL:65536 X 8 EPROM,PRGM	80009	160537108
A5U2260	160-5371-09	B015248	B015983	MICROCKT,DGTL:65536 X 8 EPROM,PRGM	80009	160537109
A5U2260	160-5371-11	B015984		MICROCKT,DGTL:65536 X 8 EPROM,PRGM (NOT PART OF CIRCUIT BOARD)	80009	160537111
A5U2301	156-0865-00			IC,DIGITAL:LSTTL,FLIP FLOP;OCTAL D-TYPE	01295	SN74LS273N
A5U2310	156-0865-00			IC,DIGITAL:LSTTL,FLIP FLOP;OCTAL D-TYPE	01295	SN74LS273N
A5U2350	156-0956-00			IC,DIGITAL:LSTTL,BUFFER/DRIVER;OCTAL	01295	SN74LS244N3

Component Number	Tektronix Part No.	Serial No. Effective	Dscont	Name & Description	Mfr. Code	Mfr. Part No.
A5U2401	156-0513-03			IC,MISC:CMOS,ANALOG MUX;8 CHANNEL	04713	MC14051BCP
A5U2410	156-1486-00			IC,DIGITAL:CMOS,MUX/ENCODER;8-CHANNEL	04713	MC14512BCP
A5U2420	156-1200-01			IC,LINEAR:BIFET,OP-AMP	01295	TL074CN
A5U2430	156-1200-01			IC,LINEAR:BIFET,OP-AMP	01295	TL074CN
A5U2440	156-0388-00			IC,DIGITAL:LSTTL,FLIP FLOP;DUAL D W/SET	01295	SN74LS74AN
A5U2450	156-1065-00			IC,DIGITAL:LSTTL,LATCH;OCTAL D TRANSPARENT	01295	SN74LS373N
A5U2460	156-2473-00			IC,MEMORY:CMOS,SRAM;8K X 8,200NS,10UA	0B0A9	DS2064
A5U2501	156-0513-03			IC,MISC:CMOS,ANALOG MUX;8 CHANNEL	04713	MC14051BCP
A5U2510	156-1126-01			IC,LINEAR:BIPOLAR,COMPARATOR	01295	LM311P
A5U2520	156-1191-01			IC,LINEAR:BIFET,OP-AMP;6MV VOS	01295	TL072ACP
A5U2521	156-0513-03			IC,MISC:CMOS,ANALOG MUX;8 CHANNEL	04713	MC14051BCP
A5U2530	156-0513-03			IC,MISC:CMOS,ANALOG MUX;8 CHANNEL	04713	MC14051BCP
A5U2540	156-1722-00			IC,DIGITAL:FTTL,GATE;HEX INV	04713	MC74F04N
A5U2550	156-0469-00			IC,DIGITAL:LSTTL,DEMUX/DECODER	01295	SN74LS138
A5U2601	156-0513-03			IC,MISC:CMOS,ANALOG MUX;8 CHANNEL	04713	MC14051BCP
A5U2620	156-1200-01			IC,LINEAR:BIFET,OP-AMP	01295	TL074CN
A5U2630	156-1200-01			IC,LINEAR:BIFET,OP-AMP	01295	TL074CN
A5U2640	156-0895-00			IC,DIGITAL:CMOS,COUNTER;14-BIT BINARY	04713	MC14020BCP
A5U2650	156-0804-02			IC,DIGITAL:LSTTL,LATCH;QUADRUPLE S-R	01295	74LS279(NDS
A5U2660	156-1026-00			IC,DIGITAL:LSTTL,DEMUX;4-TO16 DECODER	27014	DM74LS154N
A5VR2420	152-0278-00			DIODE,ZENER:,;3V,5%,0.4W	04713	1N4372ARL
A5W511	174-0002-00			CA ASSY,SP,ELEC:26,28 AWG,2.0 L	53387	174-0002-00
A5W512	174-0001-00			CA ASSY,SP,ELEC:34,28 AWG,2.0 L	53387	174-0001-00
A5W2070	131-0566-00			BUS,CONDUCTOR:DUMMY RES,0.094 OD X 0.225L	24546	OMA0207
A5W2540	131-1817-01			BUS,CONDUCTOR:22 AWG,2.0 TO 2.125 SP	TK1492	ORDER BY DESC
A5W2610	131-1817-01			BUS,CONDUCTOR:22 AWG,2.0 TO 2.125 SP	TK1492	ORDER BY DESC
A5W2701	131-0566-00			BUS,CONDUCTOR:DUMMY RES,0.094 OD X 0.225L	24546	OMA0207
A5Y2540	158-0248-01			XTAL UNIT,QTZ:10.000MHZ,0.01% SERIES	14301	011-669-02923

Component Number	Tektronix Part No.	Serial No. Effective	Dscont	Name & Description	Mfr. Code	Mfr. Part No.
A5	671-0965-00	B050000	B050330	CIRCUIT BD ASSY:CONTROL/READOUT/BUFFER	80009	671096500
A5	671-0965-01	B050331	B050436	CIRCUIT BD ASSY:CONTROL/READOUT/BUFFER	80009	671096501
A5	671-0965-02	B050437	B050615	CIRCUIT BD ASSY:CONTROL/READOUT/BUFFER	80009	671096502
A5	671-0965-04	B050616	B051040	CIRCUIT BD ASSY:CONTROL/READOUT/BUFFER	80009	671096504
A5	671-0965-05	B051041		CIRCUIT BD ASSY:CONTROL/READOUT/BUFFER	80009	671096505
A5C2010	290-5009-00			CAP,FXD,ELCTLT:15UF,25V	2N936	293D156X0025D2T
A5C2011	290-5009-00	B050000	B050330	CAP,FXD,ELCTLT:15UF,25V	2N936	293D156X0025D2T
A5C2011	290-5034-01	B050331		CAP,FXD,ELCTLT:33UF,10V	1W344	MVK10VC33RME60T
A5C2101	283-5098-00			CAP,FXD,CER DI:0.1UF,50WVDC	04222	12065E104ZAT3A
A5C2110	283-5188-00			CAP,FXD,CER DI:100PF,5%,100V	04222	12061A101JAT1A
A5C2111	283-5098-00			CAP,FXD,CER DI:0.1UF,50WVDC	04222	12065E104ZAT3A
A5C2113	290-0943-02	B050000	B050330	CAP,FXD,ELCTLT:47UF,20%,25V	1W344	SME25VB47RM5X11
A5C2113	290-5037-01	B050331		CAP,FXD,ELCTLT:10UF,35V	1W344	MVK35VC10RME60T
A5C2160	283-5098-00			CAP,FXD,CER DI:0.1UF,50WVDC	04222	12065E104ZAT3A
A5C2220	283-5098-00			CAP,FXD,CER DI:0.1UF,50WVDC	04222	12065E104ZAT3A
A5C2221	283-5098-00			CAP,FXD,CER DI:0.1UF,50WVDC	04222	12065E104ZAT3A
A5C2222	283-5098-00			CAP,FXD,CER DI:0.1UF,50WVDC	04222	12065E104ZAT3A
A5C2230	283-5098-00			CAP,FXD,CER DI:0.1UF,50WVDC	04222	12065E104ZAT3A
A5C2240	283-5098-00			CAP,FXD,CER DI:0.1UF,50WVDC	04222	12065E104ZAT3A
A5C2241	283-5098-00			CAP,FXD,CER DI:0.1UF,50WVDC	04222	12065E104ZAT3A
A5C2250	283-5098-00			CAP,FXD,CER DI:0.1UF,50WVDC	04222	12065E104ZAT3A
A5C2321	285-1301-01			CAP,FXD,MTLZD:0.47UF,10%,50V	TK1913	MKS 2 .47/50 OR
A5C2322	283-5114-00			CAP,FXD,CER DI:0.1UF,10%,50V	04222	12065C104KAT1A
A5C2323	283-5114-00			CAP,FXD,CER DI:0.1UF,10%,50V	04222	12065C104KAT1A
A5C2324	283-5003-00			CAP,FXD,CER DI:0.01UF,10%,50V	04222	12065C103KAT1A
A5C2325	283-5003-00			CAP,FXD,CER DI:0.01UF,10%,50V	04222	12065C103KAT1A
A5C2330	285-1301-01			CAP,FXD,MTLZD:0.47UF,10%,50V	TK1913	MKS 2 .47/50 OR
A5C2331	290-0943-02	B050000	B050330	CAP,FXD,ELCTLT:47UF,20%,25V	1W344	SME25VB47RM5X11
A5C2331	290-5037-01	B050331		CAP,FXD,ELCTLT:10UF,35V	1W344	MVK35VC10RME60T
A5C2332	283-5114-00			CAP,FXD,CER DI:0.1UF,10%,50V	04222	12065C104KAT1A
A5C2333	283-5114-00			CAP,FXD,CER DI:0.1UF,10%,50V	04222	12065C104KAT1A
A5C2350	290-5009-00			CAP,FXD,ELCTLT:15UF,25V	2N936	293D156X0025D2T
A5C2352	283-5098-00			CAP,FXD,CER DI:0.1UF,50WVDC	04222	12065E104ZAT3A
A5C2360	283-5098-00			CAP,FXD,CER DI:0.1UF,50WVDC	04222	12065E104ZAT3A
A5C2361	283-5098-00	B050331		CAP,FXD,CER DI:0.1UF,50WVDC	04222	12065E104ZAT3A
A5C2415	283-5098-00			CAP,FXD,CER DI:0.1UF,50WVDC	04222	12065E104ZAT3A
A5C2420	290-5009-00			CAP,FXD,ELCTLT:15UF,25V	2N936	293D156X0025D2T
A5C2421	283-5114-00			CAP,FXD,CER DI:0.1UF,10%,50V	04222	12065C104KAT1A
A5C2422	283-5197-00			CAP,FXD,CER DI:330PF,5%,100V	04222	12061A331JAT1A
A5C2425	283-5003-00			CAP,FXD,CER DI:0.01UF,10%,50V	04222	12065C103KAT1A

Component Number	Tektronix Part No.	Serial No. Effective	Dscont	Name & Description	Mfr. Code	Mfr. Part No.
A5C2430	285-1301-01			CAP,FXD,MTLZD:0.47UF,10%,50V	TK1913	MKS 2 .47/50 OR
A5C2431	283-5114-00			CAP,FXD,CER DI:0.1UF,10%,50V	04222	12065C104KAT1A
A5C2432	283-5114-00			CAP,FXD,CER DI:0.1UF,10%,50V	04222	12065C104KAT1A
A5C2433	283-5114-00			CAP,FXD,CER DI:0.1UF,10%,50V	04222	12065C104KAT1A
A5C2434	283-5114-00			CAP,FXD,CER DI:0.1UF,10%,50V	04222	12065C104KAT1A
A5C2440	283-5098-00			CAP,FXD,CER DI:0.1UF,50WVDC	04222	12065E104ZAT3A
A5C2441	283-5098-00	B050331		CAP,FXD,CER DI:0.1UF,50WVDC	04222	12065E104ZAT3A
A5C2450	283-5098-00			CAP,FXD,CER DI:0.1UF,50WVDC	04222	12065E104ZAT3A
A5C2451	283-5098-00			CAP,FXD,CER DI:0.1UF,50WVDC	04222	12065E104ZAT3A
A5C2452	283-5098-00			CAP,FXD,CER DI:0.1UF,50WVDC	04222	12065E104ZAT3A
A5C2460	283-5098-00			CAP,FXD,CER DI:0.1UF,50WVDC	04222	12065E104ZAT3A
A5C2465	283-5188-00			CAP,FXD,CER DI:100PF,5%,100V	04222	12061A101JAT1A
A5C2501	283-5098-00			CAP,FXD,CER DI:0.1UF,50WVDC	04222	12065E104ZAT3A
A5C2510	283-5098-00			CAP,FXD,CER DI:0.1UF,50WVDC	04222	12065E104ZAT3A
A5C2511	283-5197-00			CAP,FXD,CER DI:330PF,5%,100V	04222	12061A331JAT1A
A5C2520	283-5098-00			CAP,FXD,CER DI:0.1UF,50WVDC	04222	12065E104ZAT3A
A5C2521	283-5098-00			CAP,FXD,CER DI:0.1UF,50WVDC	04222	12065E104ZAT3A
A5C2530	283-5098-00			CAP,FXD,CER DI:0.1UF,50WVDC	04222	12065E104ZAT3A
A5C2532	283-5003-00	B050331		CAP,FXD,CER DI:0.01UF,10%,50V	04222	12065C103KAT1A
A5C2540	283-5098-00			CAP,FXD,CER DI:0.1UF,50WVDC	04222	12065E104ZAT3A
A5C2542	283-5114-00	B050000	B050198	CAP,FXD,CER DI:0.1UF,10%,50V	04222	12065C104KAT1A
A5C2542	283-5098-00	B050199		CAP,FXD,CER DI:0.1UF,50WVDC	04222	12065E104ZAT3A
A5C2550	283-5098-00			CAP,FXD,CER DI:0.1UF,50WVDC	04222	12065E104ZAT3A
A5C2610	283-5098-00			CAP,FXD,CER DI:0.1UF,50WVDC	04222	12065E104ZAT3A
A5C2611	283-5098-00	B050331		CAP,FXD,CER DI:0.1UF,50WVDC	04222	12065E104ZAT3A
A5C2621	283-5114-00			CAP,FXD,CER DI:0.1UF,10%,50V	04222	12065C104KAT1A
A5C2622	283-5114-00			CAP,FXD,CER DI:0.1UF,10%,50V	04222	12065C104KAT1A
A5C2623	283-5114-00			CAP,FXD,CER DI:0.1UF,10%,50V	04222	12065C104KAT1A
A5C2629	283-5098-00			CAP,FXD,CER DI:0.1UF,50WVDC	04222	12065E104ZAT3A
A5C2630	283-5114-00			CAP,FXD,CER DI:0.1UF,10%,50V	04222	12065C104KAT1A
A5C2631	283-5114-00			CAP,FXD,CER DI:0.1UF,10%,50V	04222	12065C104KAT1A
A5C2632	283-5114-00			CAP,FXD,CER DI:0.1UF,10%,50V	04222	12065C104KAT1A
A5C2633	283-5003-00			CAP,FXD,CER DI:0.01UF,10%,50V	04222	12065C103KAT1A
A5C2634	283-5003-00			CAP,FXD,CER DI:0.01UF,10%,50V	04222	12065C103KAT1A
A5C2640	283-5098-00			CAP,FXD,CER DI:0.1UF,50WVDC	04222	12065E104ZAT3A
A5C2641	283-5098-00			CAP,FXD,CER DI:0.1UF,50WVDC	04222	12065E104ZAT3A
A5C2650	283-5098-00			CAP,FXD,CER DI:0.1UF,50WVDC	04222	12065E104ZAT3A
A5C2720	285-1301-01			CAP,FXD,MTLZD:0.47UF,10%,50V	TK1913	MKS 2 .47/50 OR
A5C2721	283-5114-00			CAP,FXD,CER DI:0.1UF,10%,50V	04222	12065C104KAT1A
A5C2722	283-5114-00			CAP,FXD,CER DI:0.1UF,10%,50V	04222	12065C104KAT1A

Component Number	Tektronix Part No.	Serial No. Effective	Dscont	Name & Description	Mfr. Code	Mfr. Part No.
A5C2730	283-5114-00			CAP,FXD,CER DI:0.1UF,10%,50V	04222	12065C104KAT1A
A5C2731	285-1301-01			CAP,FXD,MTLZD:0.47UF,10%,50V	TK1913	MKS 2 .47/50 OR
A5C2732	285-1301-01			CAP,FXD,MTLZD:0.47UF,10%,50V	TK1913	MKS 2 .47/50 OR
A5C2733	285-1301-01			CAP,FXD,MTLZD:0.47UF,10%,50V	TK1913	MKS 2 .47/50 OR
A5C2734	283-5114-00			CAP,FXD,CER DI:0.1UF,10%,50V	04222	12065C104KAT1A
A5C2800	283-5098-00	B050331		CAP,FXD,CER DI:0.1UF,50WVDC	04222	12065E104ZAT3A
A5C2801	283-5114-00	B050331		CAP,FXD,CER DI:0.1UF,10%,50V	04222	12065C104KAT1A
A5C2802	283-5114-00	B050331		CAP,FXD,CER DI:0.1UF,10%,50V	04222	12065C104KAT1A
A5C2820	283-5098-00			CAP,FXD,CER DI:0.1UF,50WVDC	04222	12065E104ZAT3A
A5C2821	283-5098-00			CAP,FXD,CER DI:0.1UF,50WVDC	04222	12065E104ZAT3A
A5C2830	283-5098-00			CAP,FXD,CER DI:0.1UF,50WVDC	04222	12065E104ZAT3A
A5C2831	283-5098-00			CAP,FXD,CER DI:0.1UF,50WVDC	04222	12065E104ZAT3A
A5C2835	283-5098-00			CAP,FXD,CER DI:0.1UF,50WVDC	04222	12065E104ZAT3A
A5C2836	283-5098-00			CAP,FXD,CER DI:0.1UF,50WVDC	04222	12065E104ZAT3A
A5C2850	283-5098-00			CAP,FXD,CER DI:0.1UF,50WVDC	04222	12065E104ZAT3A
A5C2851	283-5098-00			CAP,FXD,CER DI:0.1UF,50WVDC	04222	12065E104ZAT3A
A5C2855	283-5098-00			CAP,FXD,CER DI:0.1UF,50WVDC	04222	12065E104ZAT3A
A5C2860	283-5098-00	B050000	B050330	CAP,FXD,CER DI:0.1UF,50WVDC	04222	12065E104ZAT3A
A5C2861	283-5098-00			CAP,FXD,CER DI:0.1UF,50WVDC	04222	12065E104ZAT3A
A5C2870	283-5098-00	B050000	B050330	CAP,FXD,CER DI:0.1UF,50WVDC	04222	12065E104ZAT3A
A5C2875	283-5098-00			CAP,FXD,CER DI:0.1UF,50WVDC	04222	12065E104ZAT3A
A5C2885	283-5098-00			CAP,FXD,CER DI:0.1UF,50WVDC	04222	12065E104ZAT3A
A5C2890	283-5098-00			CAP,FXD,CER DI:0.1UF,50WVDC	04222	12065E104ZAT3A
A5C2901	283-5098-00			CAP,FXD,CER DI:0.1UF,50WVDC	04222	12065E104ZAT3A
A5C2905	283-5098-00			CAP,FXD,CER DI:0.1UF,50WVDC	04222	12065E104ZAT3A
A5C2911	283-5003-00			CAP,FXD,CER DI:0.01UF,10%,50V	04222	12065C103KAT1A
A5C2913	283-5098-00			CAP,FXD,CER DI:0.1UF,50WVDC	04222	12065E104ZAT3A
A5C2926	283-5098-00			CAP,FXD,CER DI:0.1UF,50WVDC	04222	12065E104ZAT3A
A5C2940	283-5098-00			CAP,FXD,CER DI:0.1UF,50WVDC	04222	12065E104ZAT3A
A5C2950	283-5098-00			CAP,FXD,CER DI:0.1UF,50WVDC	04222	12065E104ZAT3A
A5C2960	283-5098-00			CAP,FXD,CER DI:0.1UF,50WVDC	04222	12065E104ZAT3A
A5C2965	290-5009-00	B050000	B050330	CAP,FXD,ELCTLT:15UF,25V	2N936	293D156X0025D2T
A5C2965	290-5034-01	B050331		CAP,FXD,ELCTLT:33UF,10V	1W344	MVK10VC33RME60T
A5C2970	283-5098-00			CAP,FXD,CER DI:0.1UF,50WVDC	04222	12065E104ZAT3A
A5C2980	283-5098-00			CAP,FXD,CER DI:0.1UF,50WVDC	04222	12065E104ZAT3A
A5C2981	283-5098-00			CAP,FXD,CER DI:0.1UF,50WVDC	04222	12065E104ZAT3A
A5C2990	283-5098-00			CAP,FXD,CER DI:0.1UF,50WVDC	04222	12065E104ZAT3A
A5C2995	283-5098-00			CAP,FXD,CER DI:0.1UF,50WVDC	04222	12065E104ZAT3A
A5CR2230	152-5004-00	B050000	B050367	DIODE,SIG:,ULTRA FAST;70V,0.15A,6NS	25088	BAV99-E6327
A5CR2230	152-5018-00	B050368		DIODE,SIG:,ULTRA FAST;100V,0.74VF,4NS	27014	MMBD1203-HIGH

Component Number	Tektronix Part No.	Serial No. Effective	Dscont	Name & Description	Mfr. Code	Mfr. Part No.
A5CR2332	152-5004-00	B050000	B050367	DIODE,SIG:,ULTRA FAST;70V,0.15A,6NS	25088	BAV99-E6327
A5CR2332	152-5018-00	B050368		DIODE,SIG:,ULTRA FAST;100V,0.74VF,4NS	27014	MMBD1203-HIGH
A5CR2420	152-5004-00	B050000	B050367	DIODE,SIG:,ULTRA FAST;70V,0.15A,6NS	25088	BAV99-E6327
A5CR2420	152-5018-00	B050368		DIODE,SIG:,ULTRA FAST;100V,0.74VF,4NS	27014	MMBD1203-HIGH
A5CR2421	152-5004-00	B050000	B050367	DIODE,SIG:,ULTRA FAST;70V,0.15A,6NS	25088	BAV99-E6327
A5CR2421	152-5018-00	B050368		DIODE,SIG:,ULTRA FAST;100V,0.74VF,4NS	27014	MMBD1203-HIGH
A5CR2422	152-5004-00	B050000	B050367	DIODE,SIG:,ULTRA FAST;70V,0.15A,6NS	25088	BAV99-E6327
A5CR2422	152-5018-00	B050368		DIODE,SIG:,ULTRA FAST;100V,0.74VF,4NS	27014	MMBD1203-HIGH
A5CR2423	152-5004-00	B050000	B050367	DIODE,SIG:,ULTRA FAST;70V,0.15A,6NS	25088	BAV99-E6327
A5CR2423	152-5018-00	B050368		DIODE,SIG:,ULTRA FAST;100V,0.74VF,4NS	27014	MMBD1203-HIGH
A5CR2610	152-5005-00	B050000	B050367	DIODE,SIG:,ULTRA FAST;70V,0.15A,6NS	04713	BAW56LT1
A5CR2610	152-5062-00	B050368		DIODE,SIG:,ULTRA FAST;100V,0.74VF,4NS	27014	MMBD1205
A5CR2620	152-5005-00	B050000	B050367	DIODE,SIG:,ULTRA FAST;70V,0.15A,6NS	04713	BAW56LT1
A5CR2620	152-5062-00	B050368		DIODE,SIG:,ULTRA FAST;100V,0.74VF,4NS	27014	MMBD1205
A5CR2621	152-5005-00	B050000	B050367	DIODE,SIG:,ULTRA FAST;70V,0.15A,6NS	04713	BAW56LT1
A5CR2621	152-5062-00	B050368		DIODE,SIG:,ULTRA FAST;100V,0.74VF,4NS	27014	MMBD1205
A5CR2640	152-5005-00	B050000	B050367	DIODE,SIG:,ULTRA FAST;70V,0.15A,6NS	04713	BAW56LT1
A5CR2640	152-5062-00	B050368		DIODE,SIG:,ULTRA FAST;100V,0.74VF,4NS	27014	MMBD1205
A5J251	131-3360-00			CONN,HDR:PCB,;MALE,STR,2 X 10,0.1 CTR	53387	2520-6002UB
A5J411	131-3362-00			CONN,HDR:PCB,;MALE,STR,2 X 13,0.1 CTR	53387	2526-6002UB
A5J501	131-4671-00			CONN,HDR:PCB,;MALE,STR,1 X 3,0.1 CTR	53387	2403-6112TB
A5J503	131-4671-00			CONN,HDR:PCB,;MALE,STR,1 X 3,0.1 CTR	53387	2403-6112TB
A5J504	131-4671-00			CONN,HDR:PCB,;MALE,STR,1 X 3,0.1 CTR	53387	2403-6112TB
A5J511	131-3362-00			CONN,HDR:PCB,;MALE,STR,2 X 13,0.1 CTR	53387	2526-6002UB
A5J512	131-3364-00			CONN,HDR:PCB,;MALE,STR,2 X 17,0.1 CTR	53387	2534-6002UB
A5J651	131-3360-00			CONN,HDR:PCB,;MALE,STR,2 X 10,0.1 CTR	53387	2520-6002UB
A5J652	131-3360-00			CONN,HDR:PCB,;MALE,STR,2 X 10,0.1 CTR	53387	2520-6002UB
A5J4241	131-3323-00			CONN,HDR:PCB,;MALE,STR,2 X 20,0.1 CTR	22526	66506-025
A5J4330	131-3152-00			CONN,HDR:PCB,;MALE,STR,2 X 8,0.1 CTR	53387	2516-6002UB
A5P501	131-0993-00			CONN,BOX:SHUNT/SHORTING,;FEMALE,STR	22526	65474-006
A5P503	131-0993-00			CONN,BOX:SHUNT/SHORTING,;FEMALE,STR	22526	65474-006
A5P504	131-0993-00			CONN,BOX:SHUNT/SHORTING,;FEMALE,STR	22526	65474-006
A5Q2320	151-5001-00			TRANSISTOR,SIG:BIPOLAR,NPN;40V,200MA	04713	MMBT3904T1/T2
A5Q2805	151-5001-00			TRANSISTOR,SIG:BIPOLAR,NPN;40V,200MA	04713	MMBT3904T1/T2
A5R2001	321-5006-00			RES,FXD:METAL FILM;100 OHM,1%,0.125W,TC=100	91637	CRCW12061000FT
A5R2002	321-5006-00			RES,FXD:METAL FILM;100 OHM,1%,0.125W,TC=100	91637	CRCW12061000FT
A5R2004	321-5006-00			RES,FXD:METAL FILM;100 OHM,1%,0.125W,TC=100	91637	CRCW12061000FT
A5R2005	321-5006-00			RES,FXD:METAL FILM;100 OHM,1%,0.125W,TC=100	91637	CRCW12061000FT
A5R2006	321-5006-00			RES,FXD:METAL FILM;100 OHM,1%,0.125W,TC=100	91637	CRCW12061000FT
A5R2007	321-5006-00			RES,FXD:METAL FILM;100 OHM,1%,0.125W,TC=100	91637	CRCW12061000FT

Component Number	Tektronix Part No.	Serial No. Effective	Dscont	Name & Description	Mfr. Code	Mfr. Part No.
A5R2010	311-5038-00			RES,VAR,TRMR:CERMET;20K OHM,25%,0.25W	TK2073	G4DT203E
A5R2011	321-5026-00			RES,FXD:METAL FILM;4.75K OHM,1%,0.125W	91637	CRCW12064751FT
A5R2012	321-5165-00			RES,FXD,FILM:10K OHM,0.1%,0.125W,TC=T9	91637	TNPW1206-1002BT
A5R2013	321-5165-00			RES,FXD,FILM:10K OHM,0.1%,0.125W,TC=T9	91637	TNPW1206-1002BT
A5R2014	321-5167-00			RES,FXD:METAL FILM;221K OHM,1%,0.125W	91637	CRCW1206-22102F
A5R2015	321-5041-00			RES,FXD:METAL FILM;82.5K OHM,1%,0.125W	91637	CRCW12068252FT
A5R2016	321-5018-00			RES,FXD:METAL FILM;1.0K OHM,1%,0.125W	91637	CRCW12061001FT
A5R2101	321-5006-00			RES,FXD:METAL FILM;100 OHM,1%,0.125W	91637	CRCW12061000FT
A5R2102	321-5006-00			RES,FXD:METAL FILM;100 OHM,1%,0.125W	91637	CRCW12061000FT
A5R2103	321-5006-00			RES,FXD:METAL FILM;100 OHM,1%,0.125W	91637	CRCW12061000FT
A5R2104	321-5006-00			RES,FXD:METAL FILM;100 OHM,1%,0.125W	91637	CRCW12061000FT
A5R2201	321-5030-00			RES,FXD:METAL FILM;10.0K OHM,1%,0.125W	91637	CRCW12061002FT
A5R2202	321-5030-00			RES,FXD:METAL FILM;10.0K OHM,1%,0.125W	91637	CRCW12061002FT
A5R2203	321-5030-00			RES,FXD:METAL FILM;10.0K OHM,1%,0.125W	91637	CRCW12061002FT
A5R2204	321-5030-00			RES,FXD:METAL FILM;10.0K OHM,1%,0.125W	91637	CRCW12061002FT
A5R2205	321-5030-00			RES,FXD:METAL FILM;10.0K OHM,1%,0.125W	91637	CRCW12061002FT
A5R2210	321-5030-00	B050000	B050330	RES,FXD:METAL FILM;10.0K OHM,1%,0.125W	91637	CRCW12061002FT
A5R2211	321-5030-00	B050000	B050330	RES,FXD:METAL FILM;10.0K OHM,1%,0.125W	91637	CRCW12061002FT
A5R2212	321-5030-00	B050000	B050330	RES,FXD:METAL FILM;10.0K OHM,1%,0.125W	91637	CRCW12061002FT
A5R2213	321-5030-00	B050000	B050330	RES,FXD:METAL FILM;10.0K OHM,1%,0.125W	91637	CRCW12061002FT
A5R2214	321-5030-00	B050000	B050330	RES,FXD:METAL FILM;10.0K OHM,1%,0.125W	91637	CRCW12061002FT
A5R2215	321-5030-00	B050000	B050330	RES,FXD:METAL FILM;10.0K OHM,1%,0.125W	91637	CRCW12061002FT
A5R2220	321-5018-00			RES,FXD:METAL FILM;1.0K OHM,1%,0.125W	91637	CRCW12061001FT
A5R2230	321-5165-00			RES,FXD,FILM:10K OHM,0.1%,0.125W,TC=T9	91637	TNPW1206-1002BT
A5R2231	321-5022-00			RES,FXD:METAL FILM;2.21K OHM,1%,0.125W	91637	CRCW12062211FT
A5R2232	321-5022-00			RES,FXD:METAL FILM;2.21K OHM,1%,0.125W	91637	CRCW12062211FT
A5R2241	321-5047-00			RES,FXD:METAL FILM;100K OHM,1%,0.125W	91637	CRCW12061003FT
A5R2242	321-5047-00			RES,FXD:METAL FILM;100K OHM,1%,0.125W	91637	CRCW12061003FT
A5R2244	321-5030-00	B050000	B051040	RES,FXD:METAL FILM;10.0K OHM,1%,0.125W	91637	CRCW12061002FT
A5R2244	321-5018-00	B051041		RES,FXD:METAL FILM;1.0K OHM,1%,0.125W	91637	CRCW12061001FT
A5R2251	321-5018-00			RES,FXD:METAL FILM;1.0K OHM,1%,0.125W	91637	CRCW12061001FT
A5R2301	321-5030-00			RES,FXD:METAL FILM;10.0K OHM,1%,0.125W	91637	CRCW12061002FT
A5R2302	321-5030-00			RES,FXD:METAL FILM;10.0K OHM,1%,0.125W	91637	CRCW12061002FT
A5R2303	321-5030-00			RES,FXD:METAL FILM;10.0K OHM,1%,0.125W	91637	CRCW12061002FT
A5R2304	321-5030-00			RES,FXD:METAL FILM;10.0K OHM,1%,0.125W	91637	CRCW12061002FT
A5R2305	321-5030-00			RES,FXD:METAL FILM;10.0K OHM,1%,0.125W	91637	CRCW12061002FT
A5R2320	321-5034-00			RES,FXD:METAL FILM;22.1K OHM,1%,0.125W	91637	CRCW12062212FT
A5R2321	321-5030-00			RES,FXD:METAL FILM;10.0K OHM,1%,0.125W	91637	CRCW12061002FT
A5R2322	321-5030-00			RES,FXD:METAL FILM;10.0K OHM,1%,0.125W	91637	CRCW12061002FT
A5R2323	321-5032-00			RES,FXD:METAL FILM;15.0K OHM,1%,0.125W	91637	CRCW12061502FT

Component Number	Tektronix Part No.	Serial No. Effective	Dscont	Name & Description	Mfr. Code	Mfr. Part No.
A5R2329	321-5036-00			RES,FXD:METAL FILM;33.2K OHM,1%,0.125W	91637	CRCW12063322FT
A5R2330	321-5027-00			RES,FXD:METAL FILM;5.62K OHM,1%,0.125W	91637	CRCW12065621FT
A5R2331	321-5023-00			RES,FXD:METAL FILM;2.74K OHM,1%,0.125W	91637	CRCW12062741FT
A5R2332	321-5018-00			RES,FXD:METAL FILM;1.0K OHM,1%,0.125W	91637	CRCW12061001FT
A5R2333	321-5023-00			RES,FXD:METAL FILM;2.74K OHM,1%,0.125W	91637	CRCW12062741FT
A5R2334	321-5018-00			RES,FXD:METAL FILM;1.0K OHM,1%,0.125W	91637	CRCW12061001FT
A5R2340	321-5030-00			RES,FXD:METAL FILM;10.0K OHM,1%,0.125W	91637	CRCW12061002FT
A5R2341	321-5030-00			RES,FXD:METAL FILM;10.0K OHM,1%,0.125W	91637	CRCW12061002FT
A5R2342	321-5030-00			RES,FXD:METAL FILM;10.0K OHM,1%,0.125W	91637	CRCW12061002FT
A5R2343	321-5047-00			RES,FXD:METAL FILM;100K OHM,1%,0.125W	91637	CRCW12061003FT
A5R2344	321-5047-00			RES,FXD:METAL FILM;100K OHM,1%,0.125W	91637	CRCW12061003FT
A5R2345	321-5018-00			RES,FXD:METAL FILM;1.0K OHM,1%,0.125W	91637	CRCW12061001FT
A5R2346	321-5022-00			RES,FXD:METAL FILM;2.21K OHM,1%,0.125W	91637	CRCW12062211FT
A5R2401	321-5030-00			RES,FXD:METAL FILM;10.0K OHM,1%,0.125W	91637	CRCW12061002FT
A5R2402	321-5030-00			RES,FXD:METAL FILM;10.0K OHM,1%,0.125W	91637	CRCW12061002FT
A5R2403	321-5030-00			RES,FXD:METAL FILM;10.0K OHM,1%,0.125W	91637	CRCW12061002FT
A5R2404	321-5030-00			RES,FXD:METAL FILM;10.0K OHM,1%,0.125W	91637	CRCW12061002FT
A5R2405	321-5047-00			RES,FXD:METAL FILM;100K OHM,1%,0.125W	91637	CRCW12061003FT
A5R2406	321-5047-00			RES,FXD:METAL FILM;100K OHM,1%,0.125W	91637	CRCW12061003FT
A5R2407	321-5030-00			RES,FXD:METAL FILM;10.0K OHM,1%,0.125W	91637	CRCW12061002FT
A5R2408	321-5030-00			RES,FXD:METAL FILM;10.0K OHM,1%,0.125W	91637	CRCW12061002FT
A5R2409	321-5030-00			RES,FXD:METAL FILM;10.0K OHM,1%,0.125W	91637	CRCW12061002FT
A5R2410	321-5047-00			RES,FXD:METAL FILM;100K OHM,1%,0.125W	91637	CRCW12061003FT
A5R2411	321-5030-00			RES,FXD:METAL FILM;10.0K OHM,1%,0.125W	91637	CRCW12061002FT
A5R2412	321-5047-00			RES,FXD:METAL FILM;100K OHM,1%,0.125W	91637	CRCW12061003FT
A5R2413	321-5030-00			RES,FXD:METAL FILM;10.0K OHM,1%,0.125W	91637	CRCW12061002FT
A5R2414	321-5030-00			RES,FXD:METAL FILM;10.0K OHM,1%,0.125W	91637	CRCW12061002FT
A5R2415	321-5018-00			RES,FXD:METAL FILM;1.0K OHM,1%,0.125W	91637	CRCW12061001FT
A5R2416	321-5030-00			RES,FXD:METAL FILM;10.0K OHM,1%,0.125W	91637	CRCW12061002FT
A5R2417	321-5030-00			RES,FXD:METAL FILM;10.0K OHM,1%,0.125W	91637	CRCW12061002FT
A5R2420	321-5030-00			RES,FXD:METAL FILM;10.0K OHM,1%,0.125W	91637	CRCW12061002FT
A5R2421	321-5165-00			RES,FXD,FILM:10K OHM,0.1%,0.125W,TC=T9	91637	TNPW1206-1002BT
A5R2422	321-5165-00			RES,FXD,FILM:10K OHM,0.1%,0.125W,TC=T9	91637	TNPW1206-1002BT
A5R2423	321-5018-00			RES,FXD:METAL FILM;1.0K OHM,1%,0.125W	91637	CRCW12061001FT
A5R2424	321-5031-00			RES,FXD:METAL FILM;12.1K OHM,1%,0.125W	91637	CRCW12061212FT
A5R2430	321-5165-00			RES,FXD,FILM:10K OHM,0.1%,0.125W,TC=T9	91637	TNPW1206-1002BT
A5R2431	321-5006-00			RES,FXD:METAL FILM;100 OHM,1%,0.125W,TC=100	91637	CRCW12061000FT
A5R2432	321-5036-00			RES,FXD:METAL FILM;33.2K OHM,1%,0.125W	91637	CRCW12063322FT
A5R2433	321-5030-00			RES,FXD:METAL FILM;10.0K OHM,1%,0.125W	91637	CRCW12061002FT
A5R2434	321-5030-00			RES,FXD:METAL FILM;10.0K OHM,1%,0.125W	91637	CRCW12061002FT

Component Number	Tektronix Part No.	Serial No. Effective	Dscont	Name & Description	Mfr. Code	Mfr. Part No.
A5R2435	321-5041-00			RES,FXD:METAL FILM;82.5K OHM,1%,0.125W	91637	CRCW12068252FT
A5R2440	321-5047-00			RES,FXD:METAL FILM;100K OHM,1%,0.125W	91637	CRCW12061003FT
A5R2441	321-5047-00			RES,FXD:METAL FILM;100K OHM,1%,0.125W	91637	CRCW12061003FT
A5R2442	321-5047-00			RES,FXD:METAL FILM;100K OHM,1%,0.125W	91637	CRCW12061003FT
A5R2443	321-5030-00			RES,FXD:METAL FILM;10.0K OHM,1%,0.125W	91637	CRCW12061002FT
A5R2444	321-5018-00			RES,FXD:METAL FILM;1.0K OHM,1%,0.125W	91637	CRCW12061001FT
A5R2461	321-5018-00	B050000	B050330	RES,FXD:METAL FILM;1.0K OHM,1%,0.125W	91637	CRCW12061001FT
A5R2465	321-5016-00			RES,FXD:METAL FILM;681 OHM,1%,0.125W	91637	CRCW12066810FT
A5R2501	321-5030-00			RES,FXD:METAL FILM;10.0K OHM,1%,0.125W	91637	CRCW12061002FT
A5R2502	321-5030-00			RES,FXD:METAL FILM;10.0K OHM,1%,0.125W	91637	CRCW12061002FT
A5R2503	321-5030-00			RES,FXD:METAL FILM;10.0K OHM,1%,0.125W	91637	CRCW12061002FT
A5R2504	321-5030-00			RES,FXD:METAL FILM;10.0K OHM,1%,0.125W	91637	CRCW12061002FT
A5R2505	321-5030-00			RES,FXD:METAL FILM;10.0K OHM,1%,0.125W	91637	CRCW12061002FT
A5R2511	321-5018-00			RES,FXD:METAL FILM;1.0K OHM,1%,0.125W	91637	CRCW12061001FT
A5R2512	321-5018-00			RES,FXD:METAL FILM;1.0K OHM,1%,0.125W	91637	CRCW12061001FT
A5R2513	321-5030-00			RES,FXD:METAL FILM;10.0K OHM,1%,0.125W	91637	CRCW12061002FT
A5R2520	321-5164-00			RES,FXD,FILM:681 OHM,0.1%,0.125W,TC=T9	91637	TNPW12066810BT
A5R2521	321-5164-00			RES,FXD,FILM:681 OHM,0.1%,0.125W,TC=T9	91637	TNPW12066810BT
A5R2522	321-5030-00	B050000	B050330	RES,FXD:METAL FILM;10.0K OHM,1%,0.125W	91637	CRCW12061002FT
A5R2522	321-5020-00	B050331		RES,FXD:METAL FILM;1.5K OHM,1%,0.125W	91637	CRCW12061501FT
A5R2523	321-5040-00	B050000	B050220	RES,FXD:METAL FILM;68.1K OHM,1%,0.125W	91637	CRCW12066812FT
A5R2523	321-5030-00	B050331		RES,FXD:METAL FILM;10.0K OHM,1%,0.125W	91637	CRCW12061002FT
A5R2524	321-5040-00			RES,FXD:METAL FILM;68.1K OHM,1%,0.125W	91637	CRCW12066812FT
A5R2531	321-5006-00			RES,FXD:METAL FILM;100 OHM,1%,0.125W,TC=100	91637	CRCW12061000FT
A5R2532	321-5040-00	B050000	B050330	RES,FXD:METAL FILM;68.1K OHM,1%,0.125W	91637	CRCW12066812FT
A5R2532	321-5030-00	B050331		RES,FXD:METAL FILM;10.0K OHM,1%,0.125W	91637	CRCW12061002FT
A5R2533	321-5023-00			RES,FXD:METAL FILM;2.74K OHM,1%,0.125W	91637	CRCW12062741FT
A5R2534	321-5023-00			RES,FXD:METAL FILM;2.74K OHM,1%,0.125W	91637	CRCW12062741FT
A5R2535	321-5023-00			RES,FXD:METAL FILM;2.74K OHM,1%,0.125W	91637	CRCW12062741FT
A5R2536	321-5030-00			RES,FXD:METAL FILM;10.0K OHM,1%,0.125W	91637	CRCW12061002FT
A5R2537	321-5022-00			RES,FXD:METAL FILM;2.21K OHM,1%,0.125W	91637	CRCW12062211FT
A5R2540	321-5030-00			RES,FXD:METAL FILM;10.0K OHM,1%,0.125W	91637	CRCW12061002FT
A5R2560	321-5022-00			RES,FXD:METAL FILM;2.21K OHM,1%,0.125W	91637	CRCW12062211FT
A5R2601	321-5012-00			RES,FXD:METAL FILM;332 OHM,1%,0.125W,TC=100	91637	CRCW12063320FT
A5R2602	321-5030-00			RES,FXD:METAL FILM;10.0K OHM,1%,0.125W	91637	CRCW12061002FT
A5R2603	321-5030-00			RES,FXD:METAL FILM;10.0K OHM,1%,0.125W	91637	CRCW12061002FT
A5R2611	321-5047-00			RES,FXD:METAL FILM;100K OHM,1%,0.125W	91637	CRCW12061003FT
A5R2612	321-5026-00			RES,FXD:METAL FILM;4.75K OHM,1%,0.125W	91637	CRCW12064751FT
A5R2613	321-5030-00			RES,FXD:METAL FILM;10.0K OHM,1%,0.125W	91637	CRCW12061002FT
A5R2620	321-5030-00			RES,FXD:METAL FILM;10.0K OHM,1%,0.125W	91637	CRCW12061002FT

Component Number	Tektronix Part No.	Serial No. Effective	Dscont	Name & Description	Mfr. Code	Mfr. Part No.
A5R2621	321-5022-00			RES,FXD:METAL FILM;2.21K OHM,1%,0.125W	91637	CRCW12062211FT
A5R2622	321-5006-00			RES,FXD:METAL FILM;100 OHM,1%,0.125W,TC=100	91637	CRCW12061000FT
A5R2623	321-5022-00			RES,FXD:METAL FILM;2.21K OHM,1%,0.125W	91637	CRCW12062211FT
A5R2624	321-5026-00			RES,FXD:METAL FILM;4.75K OHM,1%,0.125W	91637	CRCW12064751FT
A5R2625	321-5030-00			RES,FXD:METAL FILM;10.0K OHM,1%,0.125W	91637	CRCW12061002FT
A5R2626	321-5030-00			RES,FXD:METAL FILM;10.0K OHM,1%,0.125W	91637	CRCW12061002FT
A5R2630	321-5018-00			RES,FXD:METAL FILM;1.0K OHM,1%,0.125W	91637	CRCW12061001FT
A5R2631	321-5023-00			RES,FXD:METAL FILM;2.74K OHM,1%,0.125W	91637	CRCW12062741FT
A5R2632	321-5018-00			RES,FXD:METAL FILM;1.0K OHM,1%,0.125W	91637	CRCW12061001FT
A5R2640	321-5030-00	B050000	B050330	RES,FXD:METAL FILM;10.0K OHM,1%,0.125W	91637	CRCW12061002FT
A5R2640	321-5020-00	B050331		RES,FXD:METAL FILM;1.5K OHM,1%,0.125W	91637	CRCW12061501FT
A5R2643	321-5030-00			RES,FXD:METAL FILM;10.0K OHM,1%,0.125W	91637	CRCW12061002FT
A5R2644	321-5030-00			RES,FXD:METAL FILM;10.0K OHM,1%,0.125W	91637	CRCW12061002FT
A5R2645	321-5030-00			RES,FXD:METAL FILM;10.0K OHM,1%,0.125W	91637	CRCW12061002FT
A5R2646	321-5030-00	B050000	B050330	RES,FXD:METAL FILM;10.0K OHM,1%,0.125W	91637	CRCW12061002FT
A5R2647	321-5030-00	B050000	B050330	RES,FXD:METAL FILM;10.0K OHM,1%,0.125W	91637	CRCW12061002FT
A5R2648	321-5030-00	B050000	B050330	RES,FXD:METAL FILM;10.0K OHM,1%,0.125W	91637	CRCW12061002FT
A5R2649	321-5012-00			RES,FXD:METAL FILM;332 OHM,1%,0.125W,TC=100	91637	CRCW12063320FT
A5R2701	321-5030-00			RES,FXD:METAL FILM;10.0K OHM,1%,0.125W	91637	CRCW12061002FT
A5R2702	321-5030-00			RES,FXD:METAL FILM;10.0K OHM,1%,0.125W	91637	CRCW12061002FT
A5R2703	321-5030-00			RES,FXD:METAL FILM;10.0K OHM,1%,0.125W	91637	CRCW12061002FT
A5R2704	321-5030-00			RES,FXD:METAL FILM;10.0K OHM,1%,0.125W	91637	CRCW12061002FT
A5R2705	321-5030-00			RES,FXD:METAL FILM;10.0K OHM,1%,0.125W	91637	CRCW12061002FT
A5R2706	321-5030-00			RES,FXD:METAL FILM;10.0K OHM,1%,0.125W	91637	CRCW12061002FT
A5R2707	321-5030-00			RES,FXD:METAL FILM;10.0K OHM,1%,0.125W	91637	CRCW12061002FT
A5R2708	321-5030-00			RES,FXD:METAL FILM;10.0K OHM,1%,0.125W	91637	CRCW12061002FT
A5R2709	321-5030-00			RES,FXD:METAL FILM;10.0K OHM,1%,0.125W	91637	CRCW12061002FT
A5R2710	321-5030-00			RES,FXD:METAL FILM;10.0K OHM,1%,0.125W	91637	CRCW12061002FT
A5R2711	321-5030-00			RES,FXD:METAL FILM;10.0K OHM,1%,0.125W	91637	CRCW12061002FT
A5R2712	321-5030-00			RES,FXD:METAL FILM;10.0K OHM,1%,0.125W	91637	CRCW12061002FT
A5R2714	321-5014-00	B050331		RES,FXD:METAL FILM;475 OHM,1%,0.125W,TC=100	91637	CRCW12064750FT
A5R2720	321-5030-00			RES,FXD:METAL FILM;10.0K OHM,1%,0.125W	91637	CRCW12061002FT
A5R2721	321-5034-00			RES,FXD:METAL FILM;22.1K OHM,1%,0.125W	91637	CRCW12062212FT
A5R2730	321-5034-00			RES,FXD:METAL FILM;22.1K OHM,1%,0.125W	91637	CRCW12062212FT
A5R2731	321-5199-00			RES,FXD,FILM:100M OHM,10%,0.0625 W	56637	HR1206
A5R2732	321-5199-00			RES,FXD,FILM:100M OHM,10%,0.0625 W	56637	HR1206
A5R2733	321-5023-00			RES,FXD:METAL FILM;2.74K OHM,1%,0.125W	91637	CRCW12062741FT
A5R2734	321-5022-00			RES,FXD:METAL FILM;2.21K OHM,1%,0.125W	91637	CRCW12062211FT
A5R2735	321-5022-00			RES,FXD:METAL FILM;2.21K OHM,1%,0.125W	91637	CRCW12062211FT
A5R2740	321-5018-00			RES,FXD:METAL FILM;1.0K OHM,1%,0.125W	91637	CRCW12061001FT

Component Number	Tektronix Part No.	Serial No. Effective	Dscont	Name & Description	Mfr. Code	Mfr. Part No.
A5R2741	321-5006-00	B050000	B050330	RES,FXD:METAL FILM;100 OHM,1%,0.125W,TC=100	91637	CRCW12061000FT
A5R2741	321-5014-00	B050331		RES,FXD:METAL FILM;475 OHM,1%,0.125W,TC=100	91637	CRCW12064750FT
A5R2742	321-5014-00	B050331		RES,FXD:METAL FILM;475 OHM,1%,0.125W,TC=100	91637	CRCW12064750FT
A5R2830	321-5051-00	B050000	B050330	RES,FXD:METAL FILM;0 OHM,1%,0.125W,TC=100	09969	CRCW1206 JUMPER
A5R2865	321-5030-00	B050000	B050330	RES,FXD:METAL FILM;10.0K OHM,1%,0.125W	91637	CRCW12061002FT
A5R2866	321-5030-00			RES,FXD:METAL FILM;10.0K OHM,1%,0.125W	91637	CRCW12061002FT
A5R2885	321-5012-00			RES,FXD:METAL FILM;332 OHM,1%,0.125W,TC=100	91637	CRCW12063320FT
A5R2890	321-5012-00			RES,FXD:METAL FILM;332 OHM,1%,0.125W,TC=100	91637	CRCW12063320FT
A5R2902	321-5018-00			RES,FXD:METAL FILM;1.0K OHM,1%,0.125W	91637	CRCW12061001FT
A5R2903	321-5165-00			RES,FXD,FILM:10K OHM,0.1%,0.125W,TC=T9	91637	TNPW1206-1002BT
A5R2904	321-5012-00			RES,FXD:METAL FILM;332 OHM,1%,0.125W,TC=100	91637	CRCW12063320FT
A5R2905	321-5028-00			RES,FXD:METAL FILM;6.81K OHM,1%,0.125W	91637	CRCW12066811FT
A5R2906	321-5165-00			RES,FXD,FILM:10K OHM,0.1%,0.125W,TC=T9	91637	TNPW1206-1002BT
A5R2907	321-5033-00			RES,FXD:METAL FILM;18.2K OHM,1%,0.125W	91637	CRCW12061822FT
A5R2908	321-5032-00			RES,FXD:METAL FILM;15.0K OHM,1%,0.125W	91637	CRCW12061502FT
A5R2909	321-5032-00			RES,FXD:METAL FILM;15.0K OHM,1%,0.125W	91637	CRCW12061502FT
A5R2910	321-5032-00			RES,FXD:METAL FILM;15.0K OHM,1%,0.125W	91637	CRCW12061502FT
A5R2911	321-5032-00			RES,FXD:METAL FILM;15.0K OHM,1%,0.125W	91637	CRCW12061502FT
A5R2912	321-5018-00			RES,FXD:METAL FILM;1.0K OHM,1%,0.125W	91637	CRCW12061001FT
A5R2913	321-5015-00			RES,FXD:METAL FILM;562 OHM,1%,0.125W,TC=100	91637	CRCW12065620FT
A5R2914	321-5032-00			RES,FXD:METAL FILM;15.0K OHM,1%,0.125W	91637	CRCW12061502FT
A5R2915	321-5015-00			RES,FXD:METAL FILM;562 OHM,1%,0.125W,TC=100	91637	CRCW12065620FT
A5R2916	321-5064-00			RES,FXD:METAL FILM;200K OHM,1%,0.125W	91637	CRCW1206-2003FT
A5R2917	321-5047-00			RES,FXD:METAL FILM;100K OHM,1%,0.125W	91637	CRCW12061003FT
A5R2918	311-5038-00			RES,VAR,TRMR:CERMET;20K OHM,25%,0.25W	TK2073	G4DT203E
A5R2919	321-5038-00			RES,FXD:METAL FILM;47.5K OHM,1%,0.125W	91637	CRCW12064752FT
A5R2920	321-5064-00			RES,FXD:METAL FILM;200K OHM,1%,0.125W	91637	CRCW1206-2003FT
A5R2921	321-5031-00			RES,FXD:METAL FILM;12.1K OHM,1%,0.125W	91637	CRCW12061212FT
A5R2922	321-5047-00			RES,FXD:METAL FILM;100K OHM,1%,0.125W	91637	CRCW12061003FT
A5R2923	321-5047-00			RES,FXD:METAL FILM;100K OHM,1%,0.125W	91637	CRCW12061003FT
A5R2924	321-5064-00			RES,FXD:METAL FILM;200K OHM,1%,0.125W	91637	CRCW1206-2003FT
A5R2925	321-5023-00			RES,FXD:METAL FILM;2.74K OHM,1%,0.125W	91637	CRCW12062741FT
A5R2926	321-5020-00			RES,FXD:METAL FILM;1.5K OHM,1%,0.125W	91637	CRCW12061501FT
A5R2927	321-5026-00			RES,FXD:METAL FILM;4.75K OHM,1%,0.125W	91637	CRCW12064751FT
A5R2928	321-5030-00			RES,FXD:METAL FILM;10.0K OHM,1%,0.125W	91637	CRCW12061002FT
A5R2929	321-5030-00			RES,FXD:METAL FILM;10.0K OHM,1%,0.125W	91637	CRCW12061002FT
A5R2930	321-5030-00			RES,FXD:METAL FILM;10.0K OHM,1%,0.125W	91637	CRCW12061002FT
A5R2931	311-5040-00	B050000	B050307	RES,VAR,NONWW:TRMR,10K OHM,25%,0.1W	TK2073	G4DT103M
A5R2931	311-5034-00	B050308		RES,VAR,TRMR:CERMET;2K OHM,25%,0.25W	TK2073	G4DT202M
A5R2932	321-5047-00			RES,FXD:METAL FILM;100K OHM,1%,0.125W	91637	CRCW12061003FT

Component Number	Tektronix Part No.	Serial No. Effective	Dscont	Name & Description	Mfr. Code	Mfr. Part No.
A5R2933	321-5064-00			RES,FXD:METAL FILM;200K OHM,1%,0.125W	91637	CRCW1206-2003FT
A5R2934	321-5064-00			RES,FXD:METAL FILM;200K OHM,1%,0.125W	91637	CRCW1206-2003FT
A5R2935	321-5047-00			RES,FXD:METAL FILM;100K OHM,1%,0.125W	91637	CRCW12061003FT
A5R2960	321-5030-00			RES,FXD:METAL FILM;10.0K OHM,1%,0.125W	91637	CRCW12061002FT
A5R2961	321-5030-00			RES,FXD:METAL FILM;10.0K OHM,1%,0.125W	91637	CRCW12061002FT
A5R2995	321-5030-00			RES,FXD:METAL FILM;10.0K OHM,1%,0.125W	91637	CRCW12061002FT
A5U2101	156-5157-01			IC,CONVERTER:BIPOLAR,D/A;12 BIT,300NS	18324	AM6012DT (D/C88
A5U2140	156-1342-01			IC,PROCESSOR:NMOS,MICROPROCESSOR	04713	MC68B02P
A5U2160	160-5876-00	B050000	B050249	MICROCKT,DGTL:8K X 8 EPROM,PRGM	80009	160587600
A5U2160	160-5876-01	B050250		MICROCKT,DGTL:8K X 8 EPROM,PRGM	TK0161	ORDER BY DESC
A5U2201	156-5147-01			IC,DIGITAL:HCTCMOS,FLIP FLOP;OCTAL D-TYPE	18324	74HCT273DT
A5U2210	156-5147-01			IC,DIGITAL:HCTCMOS,FLIP FLOP;OCTAL D-TYPE	18324	74HCT273DT
A5U2220	156-5071-01			IC,DIGITAL:HCTCMOS,TRANSCEIVER;OCTAL	18324	74HCT245DT
A5U2240	156-5489-01			IC,MISC:BIPOLAR,PWR SUPPLY SUPERVISOR	01295	TL7705ACDR
A5U2250	160-5874-00			IC,DIGITAL:STTL,PLD;PLA, PLS153A, 30NS	TK0161	160-5874-00
A5U2301	156-5147-01			IC,DIGITAL:HCTCMOS,FLIP FLOP;OCTAL D-TYPE	18324	74HCT273DT
A5U2310	156-5147-01			IC,DIGITAL:HCTCMOS,FLIP FLOP;OCTAL D-TYPE	18324	74HCT273DT
A5U2350	156-5071-01			IC,DIGITAL:HCTCMOS,TRANSCEIVER;OCTAL	18324	74HCT245DT
A5U2360	160-5877-01	B050000	B050615	MICROCKT,DGTL:16K X 8 X 8 EPROM,PRGM	80009	160587701
A5U2360	160-5877-02	B050616		MICROCKT,DGTL .:16K X 8 X 8 EPROM,PRGM	34649	ORDER BY DESC
A5U2401	156-5050-01			IC,MISC:HCMOS,ANALOG MUX;8-CHANNEL	18324	74HC4051DT
A5U2405	156-5409-01			IC,DIGITAL:HCTCMOS,LATCH;OCTAL D-TYPE	01295	SN74HCT573DWR
A5U2410	156-5459-01			IC,DIGITAL:HCMOS,TRANSCEIVER;OCTAL	01295	SN74HC245DR
A5U2415	156-5409-01			IC,DIGITAL:HCTCMOS,LATCH;OCTAL D-TYPE	01295	SN74HCT573DWR
A5U2420	156-2051-01			IC,LINEAR:BIFET,OP-AMP;QUAD	01295	TL074CDR
A5U2425	156-5409-01			IC,DIGITAL:HCTCMOS,LATCH;OCTAL D-TYPE	01295	SN74HCT573DWR
A5U2430	156-2051-01			IC,LINEAR:BIFET,OP-AMP;QUAD	01295	TL074CDR
A5U2440	156-5145-01			IC,DIGITAL:HCTCMOS,FLIP FLOP;DUAL D-TYPE	18324	74HCT74DT
A5U2450	156-5409-01			IC,DIGITAL:HCTCMOS,LATCH;OCTAL D-TYPE	01295	SN74HCT573DWR
A5U2460	156-2991-00			IC,MEMORY:CMOS,NVRAM;8K X 8,200NS	0B0A9	DS1225Y
A5U2501	156-5050-01			IC,MISC:HCMOS,ANALOG MUX;8-CHANNEL	18324	74HC4051DT
A5U2510	156-5000-01			IC,LINEAR:BIPOLAR,COMPARATOR	01295	LM311DR
A5U2520	156-5138-01			IC,LINEAR:BIFET,OP-AMP;DUAL	01295	TL072CDR
A5U2521	156-5050-01			IC,MISC:HCMOS,ANALOG MUX;8-CHANNEL	18324	74HC4051DT
A5U2530	156-5050-01			IC,MISC:HCMOS,ANALOG MUX;8-CHANNEL	18324	74HC4051DT
A5U2540	156-5081-01			IC,DIGITAL:HCTMOS,GATE;HEX INVERTER	04713	MC74HCT04ADR2
A5U2550	156-5088-01			IC,DIGITAL:HCTCMOS,DEMUX/DECODER	18324	74HCT138DT
A5U2560	156-5145-01			IC,DIGITAL:HCTCMOS,FLIP FLOP;DUAL D-TYPE	18324	74HCT74DT
A5U2570	156-5145-01			IC,DIGITAL:HCTCMOS,FLIP FLOP;DUAL D-TYPE	18324	74HCT74DT
A5U2601	156-5050-01			IC,MISC:HCMOS,ANALOG MUX;8-CHANNEL	18324	74HC4051DT

Component Number	Tektronix Part No.	Serial No. Effective	Dscont	Name & Description	Mfr. Code	Mfr. Part No.
A5U2620	156-2051-01			IC,LINEAR:BIFET,OP-AMP;QUAD	01295	TL074CDR
A5U2630	156-2051-01			IC,LINEAR:BIFET,OP-AMP;QUAD	01295	TL074CDR
A5U2640	156-5567-01			IC,DIGITAL:CMOS,COUNTER;14-BIT BINARY	04713	MC14020BDR1 (2)
A5U2650	156-5088-01			IC,DIGITAL:HCTCMOS,DEMUX/DECODER	18324	74HCT138DT
A5U2660	156-5088-01			IC,DIGITAL:HCTCMOS,DEMUX/DECODER	18324	74HCT138DT
A5U2800	156-5120-01			IC,MISC:HCMOS,ANALOG MUX;4-CHANNEL	18324	74HC4052DT
A5U2805	156-5120-01			IC,MISC:HCMOS,ANALOG MUX;4-CHANNEL	18324	74HC4052DT
A5U2810	156-5098-01			IC,DIGITAL:HCTCMOS,GATE;QUAD 2-INPUT NAND	18324	74HCT00DT
A5U2820	156-2051-01			IC,LINEAR:BIFET,OP-AMP;QUAD	01295	TL074CDR
A5U2830	156-5306-01			IC,DIGITAL:HCTCMOS,COUNTER;DUAL 4-BIT	18324	74HCT393DT
A5U2835	156-5085-01			IC,DIGITAL:HCTCMOS,GATE;QUAD 2-INPUT OR	18324	74HCT32DT
A5U2850	156-5145-01			IC,DIGITAL:HCTCMOS,FLIP FLOP;DUAL D-TYPE	18324	74HCT74DT
A5U2855	156-5106-01			IC,DIGITAL:HCTCMOS,GATE;QUAD 2-INPUT NOR	18324	74HCT02DT
A5U2860	156-5569-01			IC,DIGITAL:HCTCMOS,REGISTER;8-BIT SHIFT	18324	74HCT299DT
A5U2865	156-5021-01			IC,DIGITAL:CMOS,REGISTER;8-STAGE	18324	HEF4094BTDT
A5U2870	156-5306-01			IC,DIGITAL:HCTCMOS,COUNTER;DUAL 4-BIT	18324	74HCT393DT
A5U2875	156-5145-01			IC,DIGITAL:HCTCMOS,FLIP FLOP;DUAL D-TYPE	18324	74HCT74DT
A5U2880	156-5145-01			IC,DIGITAL:HCTCMOS,FLIP FLOP;DUAL D-TYPE	18324	74HCT74DT
A5U2885	156-5130-01			IC,DIGITAL:HCTCMOS,GATE;TRIPLE 3-INPUT	18324	74HCT10DT
A5U2890	156-5098-01			IC,DIGITAL:HCTCMOS,GATE;QUAD 2-INPUT NAND	18324	74HCT00DT
A5U2900	156-5130-01			IC,DIGITAL:HCTCMOS,GATE;TRIPLE 3-INPUT	18324	74HCT10DT
A5U2905	156-5147-01			IC,DIGITAL:HCTCMOS,FLIP FLOP;OCTAL D-TYPE	18324	74HCT273DT
A5U2910	156-1555-00			IC,CONVERTER:BIPOLAR,D/A;8 BIT,200NS	34335	AM6080PC
A5U2920	156-5011-00	B050000	B050198	IC,MEMORY:CMOS,SRAM;8K X 8,150NS,OE	62786	HM6264LFP-15/12
A5U2920	156-5011-01	B050199		IC,MEMORY:CMOS,SRAM;8K X 8,150NS,OE	0JR04	TC5565AFL-15(EL
A5U2930	160-5875-00			MICROCKT,DGTL:8K X 8 EPROM,PRGM	TK0161	160-5875-00
A5U2935	156-5071-01			IC,DIGITAL:HCTCMOS,TRANSCEIVER;OCTAL	18324	74HCT245DT
A5U2940	156-5306-01			IC,DIGITAL:HCTCMOS,COUNTER;DUAL 4-BIT	18324	74HCT393DT
A5U2950	156-5145-01			IC,DIGITAL:HCTCMOS,FLIP FLOP;DUAL D-TYPE	18324	74HCT74DT
A5U2960	156-5021-01			IC,DIGITAL:CMOS,REGISTER;8-STAGE	18324	HEF4094BTDT
A5U2965	156-5098-01			IC,DIGITAL:HCTCMOS,GATE;QUAD 2-INPUT NAND	18324	74HCT00DT
A5U2970	156-5098-01	B050000	B050330	IC,DIGITAL:HCTCMOS,GATE;QUAD 2-INPUT NAND	18324	74HCT00DT
A5U2970	156-5146-01	B050331		IC,DIGITAL:HCTCMOS,GATE;QUAD 2-INPUT AND	18324	74HCT08DT
A5U2975	156-5098-01			IC,DIGITAL:HCTCMOS,GATE;QUAD 2-INPUT NAND	18324	74HCT00DT
A5U2980	156-5098-01			IC,DIGITAL:HCTCMOS,GATE;QUAD 2-INPUT NAND	18324	74HCT00DT
A5U2985	156-5568-01			IC,DIGITAL:HCTCMOS,REGISTER	18324	74HCT194DT
A5U2990	156-5198-01			IC,DIGITAL:HCTCMOS,GATE;QUAD 2-INPUT XOR	18324	74HCT86DT
A5U2995	156-5135-01			IC,DIGITAL:HCTCMOS,REGISTER;8-BIT SIPO	18324	74HCT164DT
A5W411	174-1366-00			CA ASSY,SP,ELEC:26,28 AWG,3.0 L	53387	ORDER BY DESC
A5W511	174-1501-00			CA ASSY,SP,ELEC:26,28 AWG,2.0 L,RIBBON	TK1547	ORDER BY DESC

Component Number	Tektronix Part No.	Serial No. Effective	Dscont	Name & Description	Mfr. Code	Mfr. Part No.
A5W512	174-1502-00			CA ASSY,SP,ELEC:34,28 AWG,2.0 L,RIBBON	TK1547	ORDER BY DESC
A5XU2360	136-0755-00			SOCKET,DIP:PCB,;FEMALE,STR,2 X 14,28 POS	09922	DILB28P-108
A5Y2540	158-5005-00			OSC,XTAL CLOCK:10MHZ,+/- 0.01 %,TTL	TK2424	MSOTETAPE 10MGH

Component Number	Tektronix Part No.	Serial No. Effective	Dscont	Name & Description	Mfr. Code	Mfr. Part No.
A6	614-0825-00			FRONT PNL ASSY:STANDARD (STANDARD)	80009	614082500
A6	614-0826-00			FRONT PNL ASSY:TV OPTION (OPTION 05)	80009	614082600
A6	614-0879-00			FR PANEL ASSY: (OPTION 5H ONLY)	80009	614087900
A6P3001	131-3478-01			CONN,BOX:PCB,;FEMALE,STR,2 X 10,0.1 CTR	58050	EX-0108
A6R3007	311-2318-00			RES,VAR,NONWW:5K OHM,30%,0.5W	32997	91Z1A-ZZZ-EA010
A6R3008	311-2316-00			RES,VAR,NONWW:2K OHM,20%,0.5W	32997	91Z1A-ZZZ-EA010
A6R3009	311-2317-00			RES,VAR,NONWW:5K OHM,30%,0.25W	32997	91Z2A-ZZZ-EA010
A6R3010	311-2318-00			RES,VAR,NONWW:5K OHM,30%,0.5W	32997	91Z1A-ZZZ-EA010
A6R3011	311-2316-00			RES,VAR,NONWW:2K OHM,20%,0.5W	32997	91Z1A-ZZZ-EA010
A6R3013	311-2316-00			RES,VAR,NONWW:2K OHM,20%,0.5W	32997	91Z1A-ZZZ-EA010
A6R3014	311-2318-00			RES,VAR,NONWW:5K OHM,30%,0.5W	32997	91Z1A-ZZZ-EA010
A6R3015	311-2316-00			RES,VAR,NONWW:2K OHM,20%,0.5W	32997	91Z1A-ZZZ-EA010
A6R3016	311-2316-00			RES,VAR,NONWW:2K OHM,20%,0.5W	32997	91Z1A-ZZZ-EA010
A6R3017	311-2316-00			RES,VAR,NONWW:2K OHM,20%,0.5W	32997	91Z1A-ZZZ-EA010
A6R3018	311-2318-00			RES,VAR,NONWW:5K OHM,30%,0.5W	32997	91Z1A-ZZZ-EA010
A6R3019	311-2316-00			RES,VAR,NONWW:2K OHM,20%,0.5W	32997	91Z1A-ZZZ-EA010
A6R3912	311-2317-00			RES,VAR,NONWW:5K OHM,30%,0.25W	32997	91Z2A-ZZZ-EA010

Component Number	Tektronix Part No.	Serial No. Effective	Dscont	Name & Description	Mfr. Code	Mfr. Part No.
A6A1	670-9236-01			CIRCUIT BD ASSY:FRONT PANEL	80009	670923601
A6A1C3001	281-0909-00			CAP,FXD,CER DI:0.022UF,20%,50V	04222	SA105C223MAA
A6A1C3002	281-0909-00			CAP,FXD,CER DI:0.022UF,20%,50V	04222	SA105C223MAA
A6A1C3019	281-0909-00			CAP,FXD,CER DI:0.022UF,20%,50V	04222	SA105C223MAA
A6A1CR3001	152-0141-02			DIODE,SIG:,ULTRA FAST;40V,150MA,4NS,2PF	27014	FDH9427
A6A1CR3002	152-0141-02			DIODE,SIG:,ULTRA FAST;40V,150MA,4NS,2PF	27014	FDH9427
A6A1CR3003	152-0141-02			DIODE,SIG:,ULTRA FAST;40V,150MA,4NS,2PF	27014	FDH9427
A6A1CR3004	152-0141-02			DIODE,SIG:,ULTRA FAST;40V,150MA,4NS,2PF	27014	FDH9427
A6A1CR3005	152-0141-02			DIODE,SIG:,ULTRA FAST;40V,150MA,4NS,2PF	27014	FDH9427
A6A1CR3006	152-0141-02			DIODE,SIG:,ULTRA FAST;40V,150MA,4NS,2PF	27014	FDH9427
A6A1CR3007	152-0141-02			DIODE,SIG:,ULTRA FAST;40V,150MA,4NS,2PF	27014	FDH9427
A6A1CR3008	152-0141-02			DIODE,SIG:,ULTRA FAST;40V,150MA,4NS,2PF	27014	FDH9427
A6A1CR3009	152-0141-02			DIODE,SIG:,ULTRA FAST;40V,150MA,4NS,2PF	27014	FDH9427
A6A1CR3010	152-0141-02			DIODE,SIG:,ULTRA FAST;40V,150MA,4NS,2PF	27014	FDH9427
A6A1CR3011	152-0141-02			DIODE,SIG:,ULTRA FAST;40V,150MA,4NS,2PF	27014	FDH9427
A6A1CR3012	152-0141-02			DIODE,SIG:,ULTRA FAST;40V,150MA,4NS,2PF	27014	FDH9427
A6A1CR3013	152-0141-02			DIODE,SIG:,ULTRA FAST;40V,150MA,4NS,2PF	27014	FDH9427
A6A1CR3014	152-0141-02			DIODE,SIG:,ULTRA FAST;40V,150MA,4NS,2PF	27014	FDH9427
A6A1CR3015	152-0141-02			DIODE,SIG:,ULTRA FAST;40V,150MA,4NS,2PF	27014	FDH9427
A6A1CR3016	152-0141-02			DIODE,SIG:,ULTRA FAST;40V,150MA,4NS,2PF	27014	FDH9427
A6A1CR3017	152-0141-02			DIODE,SIG:,ULTRA FAST;40V,150MA,4NS,2PF	27014	FDH9427
A6A1CR3018	152-0141-02			DIODE,SIG:,ULTRA FAST;40V,150MA,4NS,2PF	27014	FDH9427
A6A1CR3019	152-0141-02			DIODE,SIG:,ULTRA FAST;40V,150MA,4NS,2PF	27014	FDH9427
A6A1CR3020	152-0141-02			DIODE,SIG:,ULTRA FAST;40V,150MA,4NS,2PF	27014	FDH9427
A6A1CR3021	152-0141-02			DIODE,SIG:,ULTRA FAST;40V,150MA,4NS,2PF	27014	FDH9427
A6A1CR3022	152-0141-02			DIODE,SIG:,ULTRA FAST;40V,150MA,4NS,2PF	27014	FDH9427
A6A1CR3023	152-0141-02			DIODE,SIG:,ULTRA FAST;40V,150MA,4NS,2PF	27014	FDH9427
A6A1CR3024	152-0141-02			DIODE,SIG:,ULTRA FAST;40V,150MA,4NS,2PF	27014	FDH9427
A6A1CR3025	152-0141-02			DIODE,SIG:,ULTRA FAST;40V,150MA,4NS,2PF	27014	FDH9427
A6A1CR3026	152-0141-02			DIODE,SIG:,ULTRA FAST;40V,150MA,4NS,2PF	27014	FDH9427
A6A1CR3027	152-0141-02			DIODE,SIG:,ULTRA FAST;40V,150MA,4NS,2PF	27014	FDH9427
A6A1CR3028	152-0141-02			DIODE,SIG:,ULTRA FAST;40V,150MA,4NS,2PF	27014	FDH9427
A6A1CR3029	152-0141-02			DIODE,SIG:,ULTRA FAST;40V,150MA,4NS,2PF	27014	FDH9427
A6A1CR3030	152-0141-02			DIODE,SIG:,ULTRA FAST;40V,150MA,4NS,2PF	27014	FDH9427
A6A1CR3031	152-0141-02			DIODE,SIG:,ULTRA FAST;40V,150MA,4NS,2PF	27014	FDH9427
A6A1CR3032	152-0141-02			DIODE,SIG:,ULTRA FAST;40V,150MA,4NS,2PF	27014	FDH9427
A6A1CR3033	152-0141-02			DIODE,SIG:,ULTRA FAST;40V,150MA,4NS,2PF	27014	FDH9427
A6A1CR3034	152-0141-02			DIODE,SIG:,ULTRA FAST;40V,150MA,4NS,2PF	27014	FDH9427
A6A1CR3035	152-0141-02			DIODE,SIG:,ULTRA FAST;40V,150MA,4NS,2PF	27014	FDH9427
A6A1CR3036	152-0141-02			DIODE,SIG:,ULTRA FAST;40V,150MA,4NS,2PF	27014	FDH9427

Component Number	Tektronix Part No.	Serial No. Effective	Dscont	Name & Description	Mfr. Code	Mfr. Part No.
A6A1CR3037	152-0141-02			DIODE,SIG:,ULTRA FAST;40V,150MA,4NS,2PF	27014	FDH9427
A6A1CR3038	152-0141-02			DIODE,SIG:,ULTRA FAST;40V,150MA,4NS,2PF	27014	FDH9427
A6A1CR3039	152-0141-02			DIODE,SIG:,ULTRA FAST;40V,150MA,4NS,2PF	27014	FDH9427
A6A1CR3040	152-0141-02			DIODE,SIG:,ULTRA FAST;40V,150MA,4NS,2PF	27014	FDH9427
A6A1CR3041	152-0141-02			DIODE,SIG:,ULTRA FAST;40V,150MA,4NS,2PF	27014	FDH9427
A6A1CR3042	152-0141-02			DIODE,SIG:,ULTRA FAST;40V,150MA,4NS,2PF	27014	FDH9427
A6A1CR3043	152-0141-02			DIODE,SIG:,ULTRA FAST;40V,150MA,4NS,2PF	27014	FDH9427
A6A1CR3044	152-0141-02			DIODE,SIG:,ULTRA FAST;40V,150MA,4NS,2PF	27014	FDH9427
A6A1DS3001	150-1161-00			LT EMITTING DIO:YELLOW	50434	QLMP-1487
A6A1DS3002	150-1160-00			LT EMITTING DIO:GREEN	50434	QLMP 1587
A6A1DS3003	150-1160-00			LT EMITTING DIO:GREEN	50434	QLMP 1587
A6A1DS3004	150-1160-00			LT EMITTING DIO:GREEN	50434	QLMP 1587
A6A1DS3005	150-1160-00			LT EMITTING DIO:GREEN	50434	QLMP 1587
A6A1DS3006	150-1161-00			LT EMITTING DIO:YELLOW	50434	QLMP-1487
A6A1DS3007	150-1160-00			LT EMITTING DIO:GREEN	50434	QLMP 1587
A6A1DS3008	150-1160-00			LT EMITTING DIO:GREEN	50434	QLMP 1587
A6A1DS3009	150-1160-00			LT EMITTING DIO:GREEN	50434	QLMP 1587
A6A1DS3010	150-1160-00			LT EMITTING DIO:GREEN	50434	QLMP 1587
A6A1DS3011	150-1160-00			LT EMITTING DIO:GREEN	50434	QLMP 1587
A6A1DS3012	150-1161-00			LT EMITTING DIO:YELLOW	50434	QLMP-1487
A6A1DS3013	150-1160-00			LT EMITTING DIO:GREEN	50434	QLMP 1587
A6A1DS3014	150-1160-00			LT EMITTING DIO:GREEN	50434	QLMP 1587
A6A1DS3015	150-1160-00			LT EMITTING DIO:GREEN	50434	QLMP 1587
A6A1DS3016	150-1160-00			LT EMITTING DIO:GREEN	50434	QLMP 1587
A6A1DS3017	150-1161-00			LT EMITTING DIO:YELLOW	50434	QLMP-1487
A6A1DS3018	150-1160-00			LT EMITTING DIO:GREEN	50434	QLMP 1587
A6A1DS3019	150-1161-00			LT EMITTING DIO:YELLOW	50434	QLMP-1487
A6A1DS3020	150-1160-00			LT EMITTING DIO:GREEN	50434	QLMP 1587
A6A1DS3021	150-1161-00			LT EMITTING DIO:YELLOW	50434	QLMP-1487
A6A1DS3022	150-1161-00			LT EMITTING DIO:YELLOW	50434	QLMP-1487
A6A1DS3023	150-1160-00			LT EMITTING DIO:GREEN	50434	QLMP 1587
A6A1DS3024	150-1160-00			LT EMITTING DIO:GREEN	50434	QLMP 1587
A6A1DS3025	150-1160-00			LT EMITTING DIO:GREEN	50434	QLMP 1587
A6A1DS3026	150-1160-00			LT EMITTING DIO:GREEN	50434	QLMP 1587
A6A1DS3027	150-1161-00			LT EMITTING DIO:YELLOW	50434	QLMP-1487
A6A1DS3028	150-1161-00			LT EMITTING DIO:YELLOW	50434	QLMP-1487
A6A1DS3029	150-1160-00			LT EMITTING DIO:GREEN	50434	QLMP 1587
A6A1DS3030	150-1160-00			LT EMITTING DIO:GREEN	50434	QLMP 1587
A6A1DS3031	150-1160-00			LT EMITTING DIO:GREEN	50434	QLMP 1587
A6A1DS3032	150-1160-00			LT EMITTING DIO:GREEN	50434	QLMP 1587

Component Number	Tektronix Part No.	Serial No. Effective	Dscont	Name & Description	Mfr. Code	Mfr. Part No.
A6A1DS3033	150-1161-00			LT EMITTING DIO:YELLOW	50434	QLMP-1487
A6A1DS3034	150-1160-00			LT EMITTING DIO:GREEN	50434	QLMP 1587
A6A1DS3035	150-1160-00			LT EMITTING DIO:GREEN	50434	QLMP 1587
A6A1DS3036	150-1161-00			LT EMITTING DIO:YELLOW	50434	QLMP-1487
A6A1DS3037	150-1160-00			LT EMITTING DIO:GREEN	50434	QLMP 1587
A6A1DS3038	150-1160-00			LT EMITTING DIO:GREEN	50434	QLMP 1587
A6A1DS3039	150-1160-00			LT EMITTING DIO:GREEN	50434	QLMP 1587
A6A1DS3040	150-1160-00			LT EMITTING DIO:GREEN	50434	QLMP 1587
A6A1DS3041	150-1161-00			LT EMITTING DIO:YELLOW	50434	QLMP-1487
A6A1DS3042	150-1160-00			LT EMITTING DIO:GREEN	50434	QLMP 1587
A6A1DS3043	150-1161-00			LT EMITTING DIO:YELLOW	50434	QLMP-1487
A6A1DS3044	150-1161-00			LT EMITTING DIO:YELLOW	50434	QLMP-1487
A6A1DS3045	150-1161-00			LT EMITTING DIO:YELLOW	50434	QLMP-1487
A6A1DS3046	150-1160-00			LT EMITTING DIO:GREEN	50434	QLMP 1587
A6A1DS3047	150-1160-00			LT EMITTING DIO:GREEN	50434	QLMP 1587
A6A1DS3048	150-1160-00			LT EMITTING DIO:GREEN	50434	QLMP 1587
A6A1DS3049	150-1160-00			LT EMITTING DIO:GREEN	50434	QLMP 1587
A6A1R3001	307-0486-00			RES NTWK,FXD,FI:100 OHM,20%,1.125W	11236	750-101-R100OHM
A6A1R3002	307-0695-00			RES NTWK,FXD,FI:9,150 OHM,2%,0.2W EA	11236	750-101-R150
A6A1R3003	307-0486-00			RES NTWK,FXD,FI:100 OHM,20%,1.125W	11236	750-101-R100OHM
A6A1R3004	313-1151-00			RES,FXD,FILM:150 OHM,5%,0.2W	91637	CCF50-2-150R0J
A6A1R3005	313-1151-00			RES,FXD,FILM:150 OHM,5%,0.2W	91637	CCF50-2-150R0J
A6A1R3006	313-1101-00			RES,FXD,FILM:100 OHM,5%,0.2W	91637	CCF50-2-100R0J
A6A1S3001	260-2280-00			SW,PUSH BUTTON:MINIATURE MOMENTARY,SPST	31918	KSA-0-0-A
A6A1S3002	260-2280-00			SW,PUSH BUTTON:MINIATURE MOMENTARY,SPST	31918	KSA-0-0-A
A6A1S3003	260-2280-00			SW,PUSH BUTTON:MINIATURE MOMENTARY,SPST	31918	KSA-0-0-A
A6A1S3004	260-2283-00			SWITCH,ROTARY:VOLTS/DIV	76854	2240-MM-P/REL
A6A1S3005	260-2280-00			SW,PUSH BUTTON:MINIATURE MOMENTARY,SPST	31918	KSA-0-0-A
A6A1S3006	260-2280-00			SW,PUSH BUTTON:MINIATURE MOMENTARY,SPST	31918	KSA-0-0-A
A6A1S3007	260-2280-00			SW,PUSH BUTTON:MINIATURE MOMENTARY,SPST	31918	KSA-0-0-A
A6A1S3008	260-2280-00			SW,PUSH BUTTON:MINIATURE MOMENTARY,SPST	31918	KSA-0-0-A
A6A1S3009	260-2280-00			SW,PUSH BUTTON:MINIATURE MOMENTARY,SPST	31918	KSA-0-0-A
A6A1S3010	260-2280-00			SW,PUSH BUTTON:MINIATURE MOMENTARY,SPST	31918	KSA-0-0-A
A6A1S3011	260-2280-00			SW,PUSH BUTTON:MINIATURE MOMENTARY,SPST	31918	KSA-0-0-A
A6A1S3012	260-2280-00			SW,PUSH BUTTON:MINIATURE MOMENTARY,SPST	31918	KSA-0-0-A
A6A1S3013	260-2283-00			SWITCH,ROTARY:VOLTS/DIV	76854	2240-MM-P/REL
A6A1S3014	260-2280-00			SW,PUSH BUTTON:MINIATURE MOMENTARY,SPST	31918	KSA-0-0-A
A6A1S3015	260-2280-00			SW,PUSH BUTTON:MINIATURE MOMENTARY,SPST	31918	KSA-0-0-A
A6A1S3016	260-2280-00			SW,PUSH BUTTON:MINIATURE MOMENTARY,SPST	31918	KSA-0-0-A
A6A1S3017	260-2280-00			SW,PUSH BUTTON:MINIATURE MOMENTARY,SPST	31918	KSA-0-0-A

Component Number	Tektronix Part No.	Serial No. Effective	Dscont	Name & Description	Mfr. Code	Mfr. Part No.
A6A1S3018	260-2280-00			SW,PUSH BUTTON:MINIATURE MOMENTARY,SPST	31918	KSA-0-0-A
A6A1S3019	260-2283-00			SWITCH,ROTARY:VOLTS/DIV	76854	2240-MM-P/REL
A6A1S3020	260-2280-00			SW,PUSH BUTTON:MINIATURE MOMENTARY,SPST	31918	KSA-0-0-A
A6A1S3021	260-2164-01			SWITCH,SLIDE:SPDT,4A,20VAC	09353	1101 AV2 BE2
A6A1S3022	260-2280-00			SW,PUSH BUTTON:MINIATURE MOMENTARY,SPST	31918	KSA-0-0-A
A6A1S3023	260-2280-00			SW,PUSH BUTTON:MINIATURE MOMENTARY,SPST	31918	KSA-0-0-A
A6A1S3024	260-2280-00			SW,PUSH BUTTON:MINIATURE MOMENTARY,SPST	31918	KSA-0-0-A
A6A1S3025	260-2280-00			SW,PUSH BUTTON:MINIATURE MOMENTARY,SPST	31918	KSA-0-0-A
A6A1S3026	260-2280-00			SW,PUSH BUTTON:MINIATURE MOMENTARY,SPST	31918	KSA-0-0-A
A6A1S3027	260-2280-00			SW,PUSH BUTTON:MINIATURE MOMENTARY,SPST	31918	KSA-0-0-A
A6A1S3028	260-2280-00			SW,PUSH BUTTON:MINIATURE MOMENTARY,SPST	31918	KSA-0-0-A
A6A1S3029	260-2280-00			SW,PUSH BUTTON:MINIATURE MOMENTARY,SPST	31918	KSA-0-0-A
A6A1S3030	260-2280-00			SW,PUSH BUTTON:MINIATURE MOMENTARY,SPST	31918	KSA-0-0-A
A6A1S3031	260-2280-00			SW,PUSH BUTTON:MINIATURE MOMENTARY,SPST	31918	KSA-0-0-A
A6A1S3032	260-2280-00			SW,PUSH BUTTON:MINIATURE MOMENTARY,SPST	31918	KSA-0-0-A
A6A1S3033	260-2280-00			SW,PUSH BUTTON:MINIATURE MOMENTARY,SPST	31918	KSA-0-0-A
A6A1S3034	260-2280-00			SW,PUSH BUTTON:MINIATURE MOMENTARY,SPST	31918	KSA-0-0-A
A6A1S3035	260-2280-00			SW,PUSH BUTTON:MINIATURE MOMENTARY,SPST	31918	KSA-0-0-A
A6A1U3001	156-2120-00			IC,DIGITAL:FTTL,SHIFT REGISTER;8-BIT SIPO	27014	74F164APC
A6A1U3002	156-2120-00			IC,DIGITAL:FTTL,SHIFT REGISTER;8-BIT SIPO	27014	74F164APC
A6A1U3003	156-2120-00			IC,DIGITAL:FTTL,SHIFT REGISTER;8-BIT SIPO	27014	74F164APC
A6A1U3004	156-2120-00			IC,DIGITAL:FTTL,SHIFT REGISTER;8-BIT SIPO	27014	74F164APC
A6A1U3005	156-2120-00			IC,DIGITAL:FTTL,SHIFT REGISTER;8-BIT SIPO	27014	74F164APC
A6A1U3006	156-2120-00			IC,DIGITAL:FTTL,SHIFT REGISTER;8-BIT SIPO	27014	74F164APC

Component Number	Tektronix Part No.	Serial No. Effective	Dscont	Name & Description	Mfr. Code	Mfr. Part No.
A8	670–7280–00			CIRCUIT BD ASSY:SCALE ILLUM	80009	670728000
A8DS100	150–0057–01			LAMP,INCAND:5V,0.115A,WIRE LD,AGED & SEL	S3774	OL7153AS15TPL
A8DS101	150–0057–01			LAMP,INCAND:5V,0.115A,WIRE LD,AGED & SEL	S3774	OL7153AS15TPL
A8DS102	150–0057–01			LAMP,INCAND:5V,0.115A,WIRE LD,AGED & SEL	S3774	OL7153AS15TPL

Component Number	Tektronix Part No.	Serial No. Effective	Dscont	Name & Description	Mfr. Code	Mfr. Part No.
A9	670-9217-05			CIRCUIT BD ASSY:HV PWR SPLY	80009	670921705
A9C4300	281-0775-01			CAP,FXD,CER DI:0.1UF,20%,50V	04222	SA105E104MAA
A9C4304	281-0774-00			CAP,FXD,CER DI:0.022MFD,20%,100V	04222	SA101E223MAA
A9C4310	281-0774-00			CAP,FXD,CER DI:0.022MFD,20%,100V	04222	SA101E223MAA
A9C4330	281-0774-00			CAP,FXD,CER DI:0.022MFD,20%,100V	04222	SA101E223MAA
A9C4332	283-0077-00			CAP,FXD,CER DI:330PF,5%,500V	59660	831-500B331J
A9C4343	281-0766-00			CAP,FXD,CER DI:100PF,20%,200V	04222	SA102A101KAA
A9C4344	281-0775-01			CAP,FXD,CER DI:0.1UF,20%,50V	04222	SA105E104MAA
A9C4360	281-0826-00			CAP,FXD,CER DI:2200PF,10%,100V	TK1743	CGB222KEX
A9C4363	290-0269-01			CAP,FXD,ELCTLT:0.22UF,5%,35V,1KHZ	2N936	173D224X5035U
A9C4364	281-0826-00			CAP,FXD,CER DI:2200PF,10%,100V	TK1743	CGB222KEX
A9C4365	281-0772-00			CAP,FXD,CER DI:4700PF,10%,100V	04222	SA101C472KAA
A9C4366	290-0770-00			CAP,FXD,ELCTLT:100UF,+50-20%,25VDC	0J9R5	CEUSM1V101
A9C4367	281-0909-00			CAP,FXD,CER DI:0.022UF,20%,50V	04222	SA105C223MAA
A9C4368	281-0909-00			CAP,FXD,CER DI:0.022UF,20%,50V	04222	SA105C223MAA
A9C4377	281-0774-00			CAP,FXD,CER DI:0.022MFD,20%,100V	04222	SA101E223MAA
A9C4380	283-0429-00			CAP,FXD,CER DI:270PF,20%,2000V	18796	DHR12-Z5U271M
A9C4390	283-0105-00			CAP,FXD,CER DI:0.01UF,+80-20%,2000V	60705	564CBA202IP203Z
A9C4401	281-0783-00	B010100	B050255	CAP,FXD,CER DI:0.1 UF 20%,100V	04222	SA301E104MAA
A9C4401	285-1356-00	B050256		CAP,FXD,PLASTIC:0.047UF,20%,250	84411	X665 473M250
A9C4402	281-0783-00	B010100	B050255	CAP,FXD,CER DI:0.1 UF 20%,100V	04222	SA301E104MAA
A9C4402	285-1356-00	B050256		CAP,FXD,PLASTIC:0.047UF,20%,250	84411	X665 473M250
A9C4403	283-0279-00			CAP,FXD,CER DI:0.001UF,20%,3000V	18796	DHR12Y5S102M3KV
A9C4409	283-0115-00			CAP,FXD,CER DI:47PF,5%,200V	59660	805-XXX-C0G0-47
A9C4410	281-0810-00			CAP,FXD,CER DI:5.6PF,+/-0.5PF,100V	04222	SA102A5R6DAA
A9C4411	281-0768-00			CAP,FXD,CER DI:470PF,20%,100V	04222	SA101A471KAA
A9C4412	281-0783-00	B010100	B050255	CAP,FXD,CER DI:0.1 UF 20%,100V	04222	SA301E104MAA
A9C4412	285-1356-00	B050256		CAP,FXD,PLASTIC:0.047UF,20%,250V	84411	X665 473M250
A9C4413	281-0810-00			CAP,FXD,CER DI:5.6PF,+/-0.5PF,100V	04222	SA102A5R6DAA
A9C4421	281-0775-01			CAP,FXD,CER DI:0.1UF,20%,50V	04222	SA105E104MAA
A9C4422	281-0707-00			CAP,FXD,CER DI:15000PF,10%,200V	04222	MA302C153KAA
A9C4430	285-1338-00			CAP,FXD,MTLZD:1.0UF,10%,50V	TK1913	MKS 2 1.0/63/10
A9C4451	281-0775-01			CAP,FXD,CER DI:0.1UF,20%,50V	04222	SA105E104MAA
A9C4453	281-0774-00			CAP,FXD,CER DI:0.022MFD,20%,100V	04222	SA101E223MAA
A9C4460	281-0775-01			CAP,FXD,CER DI:0.1UF,20%,50V	04222	SA105E104MAA
A9C4461	281-0770-00			CAP,FXD,CER DI:1000PF,20%,100V	04222	SA101C102MAA
A9C4470	290-0269-01			CAP,FXD,ELCTLT:0.22UF,5%,35V,1KHZ	2N936	173D224X5035U
A9C4480	283-0105-00			CAP,FXD,CER DI:0.01UF,+80-20%,2000V	60705	564CBA202IP203Z
A9C4490	290-0770-00			CAP,FXD,ELCTLT:100UF,+50-20%,25VDC	0J9R5	CEUSM1V101
A9CR4331	152-0141-02			DIODE,SIG:,ULTRA FAST;40V,150MA,4NS,2PF	27014	FDH9427

Component Number	Tektronix Part No.	Serial No. Effective	Dscont	Name & Description	Mfr. Code	Mfr. Part No.
A9CR4342	152-0061-00			DIODE,SIG:,;200V,0.1A,700NS,4.0PF	27014	FDH2161
A9CR4374	152-0141-02			DIODE,SIG:,ULTRA FAST;40V,150MA,4NS,2PF	27014	FDH9427
A9CR4378	152-0141-02			DIODE,SIG:,ULTRA FAST;40V,150MA,4NS,2PF	27014	FDH9427
A9CR4380	152-0141-02			DIODE,SIG:,ULTRA FAST;40V,150MA,4NS,2PF	27014	FDH9427
A9CR4410	152-0061-00			DIODE,SIG:,;200V,0.1A,700NS,4.0PF	27014	FDH2161
A9CR4411	152-0061-00			DIODE,SIG:,;200V,0.1A,700NS,4.0PF	27014	FDH2161
A9CR4412	152-0141-02			DIODE,SIG:,ULTRA FAST;40V,150MA,4NS,2PF	27014	FDH9427
A9CR4414	152-0141-02			DIODE,SIG:,ULTRA FAST;40V,150MA,4NS,2PF	27014	FDH9427
A9CR4421	152-0141-02			DIODE,SIG:,ULTRA FAST;40V,150MA,4NS,2PF	27014	FDH9427
A9CR4422	152-0061-00			DIODE,SIG:,;200V,0.1A,700NS,4.0PF	27014	FDH2161
A9CR4423	152-0061-00			DIODE,SIG:,;200V,0.1A,700NS,4.0PF	27014	FDH2161
A9CR4433	152-0141-02			DIODE,SIG:,ULTRA FAST;40V,150MA,4NS,2PF	27014	FDH9427
A9CR4440	152-0141-02			DIODE,SIG:,ULTRA FAST;40V,150MA,4NS,2PF	27014	FDH9427
A9CR4460	152-0141-02			DIODE,SIG:,ULTRA FAST;40V,150MA,4NS,2PF	27014	FDH9427
A9CR4490	152-0429-00			DIODE,RECT:,FAST RCVRY;5KV,10MA,300NS,14VF	83701	ED2137
A9DS4410	119-2325-00			SURGE ARRESTER:180V,15%,2.5KA	TK1124	GT-RLSA180D3
A9E4411	119-0430-00			ARSR,ELEC SURGE:90+40-0V	25088	B1-C90/20
A9J4371	131-0608-00			TERMINAL,PIN:PRESSFIT/PCB,;MALE,STR (QUANTITY OF 2)	22526	48283-018
A9J4372	131-0608-00			TERMINAL,PIN:PRESSFIT/PCB,;MALE,STR (QUANTITY OF 2)	22526	48283-018
A9J4390	131-0608-00			TERMINAL,PIN:PRESSFIT/PCB,;MALE,STR (QUANTITY OF 2)	22526	48283-018
A9J4391	131-0608-00			TERMINAL,PIN:PRESSFIT/PCB,;MALE,STR	22526	48283-018
A9J4401	131-0589-00			TERMINAL,PIN:PRESSFIT/PCB,;MALE,STR	22526	48283-087
A9J4403	131-0566-00			BUS,CONDUCTOR:DUMMY RES,0.094 OD X 0.225L	24546	OMA0207
A9L4460	108-0237-00			COIL,RF:FIXED,80UH	0JR03	108-0237-00
A9L4490	108-0200-00			COIL,RF:FIXED,52UH	0JR03	108-0200-00
A9P191	131-3553-00			CONN,HDR:PCB,;MALE,RTANG,1 X 20,0.1 CTR	58050	082-2043-RS11
A9P901	--------			(SUBPART OF A9W901)		
A9Q4300	151-0254-00			TRANSISTOR,SIG:BIPOLAR,NPN;30V,500MA	0JR04	MPS-A14
A9Q4301	151-0347-00			TRANSISTOR,SIG:BIPOLAR,NPN;160V,600MA	0JR04	2N5551
A9Q4331	151-0444-00			TRANSISTOR,SIG:BIPOLAR,NPN;350V,500MA	04713	2N6517
A9Q4350	151-0745-00			TRANSISTOR,PWR:BIPOLAR,PNP;120V,10A,60MHZ	61271	2SA1077G
A9Q4402	151-0347-00			TRANSISTOR,SIG:BIPOLAR,NPN;160V,600MA	0JR04	2N5551
A9Q4403	151-0350-00			TRANSISTOR,SIG:BIPOLAR,PNP;150V,600MA	0JR04	TO BE ASSIGNED
A9Q4422	151-0347-00			TRANSISTOR,SIG:BIPOLAR,NPN;160V,600MA	0JR04	2N5551
A9Q4432	151-0749-00			TRANSISTOR,SIG:BIPOLAR,PNP;400V,500MA	04713	MPSA94
A9Q4440	151-0750-00			TRANSISTOR,SIG:BIPOLAR,NPN;400V,300MA	04713	MPSA44
A9Q4454	151-0347-00			TRANSISTOR,SIG:BIPOLAR,NPN;160V,600MA	0JR04	2N5551
A9Q4460	151-0745-00			TRANSISTOR,PWR:BIPOLAR,PNP;120V,10A,60MHZ	61271	2SA1077G

Component Number	Tektronix Part No.	Serial No. Effective	Dscont	Name & Description	Mfr. Code	Mfr. Part No.
A9R4300	322-3402-00			RES,FXD:METAL FILM;150K OHM,1%,0.2W,TC=100	91637	CCF50G15002F
A9R4301	322-3260-00			RES,FXD,FILM:4.99K OHM,1%,0.2W,TC=T0	91637	CCF501G49900F
A9R4302	315-0101-03			RES,FXD,CMPSN:100 OHM,5%,0.25W	01121	CB1015
A9R4303	322-3289-00			RES,FXD:METAL FILM;10K OHM,1%,0.2W,TC=100	91637	CCF50G10001F
A9R4304	322-3385-00			RES,FXD:METAL FILM;100K OHM,1%,0.2W,TC=100	91637	CCF501G10002F
A9R4305	315-0101-03			RES,FXD,CMPSN:100 OHM,5%,0.25W	01121	CB1015
A9R4306	321-0339-00			RES,FXD,FILM:33.2K OHM,1%,0.125W,TC=T0	91637	CMF55116G33201F
A9R4320	315-0101-03			RES,FXD,CMPSN:100 OHM,5%,0.25W	01121	CB1015
A9R4331	322-3492-00			RES,FXD,FILM:600K OHM,1%,0.2W,TC=T0	91637	CCF501G60002F
A9R4332	321-0510-00			RES,FXD,FILM:2.00M OHM,1%,0.125W,TC=T0	91637	CMF55116G20003F
A9R4333	315-0107-00			RES,FXD,FILM:100M OHM,5%,0.25W	01121	CB1075
A9R4334	322-3496-00			RES,FXD,FILM:95K OHM,0.1%,0.2W,TC=T0	56845	CCF50G95020F
A9R4335	311-2234-00			RES,VAR,TRMR:CERMET;5K OHM,20%,0.5W	TK2073	GF06UT2 502 M L
A9R4336	322-3431-00			RES,FXD,FILM:301K OHM,1%,0.2W,TC=T0	91637	CCF501G30102F
A9R4336	322-3481-00			RES,FXD,FILM:1M OHM.1%,0.2W,TC=T0	91637	CCF501G10003F
A9R4337	321-1720-00			RES,FXD,FILM:3.24M OHM,1%,0.125W,TC=T0	91637	CMF55116G32403F
A9R4340	311-2234-00			RES,VAR,TRMR:CERMET;5K OHM,20%,0.5W	TK2073	GF06UT2 502 M L
A9R4341	313-1393-00			RES,FXD,FILM:39K OHM,5%,0.2W	91637	CCF50-2-39001J
A9R4342	311-2239-00			RES,VAR,TRMR:CERMET;100K OHM,20%,0.5W	TK2073	GF06UT2 104 M L
A9R4343	313-1103-00			RES,FXD,FILM:10K OHM,5%,0.2W	91637	CCF50-2-10001J
A9R4350	311-2239-00			RES,VAR,TRMR:CERMET;100K OHM,20%,0.5W	TK2073	GF06UT2 104 M L
A9R4351	313-1122-00			RES,FXD,FILM:1.2K OHM,5%,0.2W	91637	CCF50-2-12000J
A9R4352	313-1202-00			RES,FXD,FILM:2K OHM,5%,0.2W	91637	CCF50-2-20000J
A9R4353	313-1224-00			RES,FXD,FILM:220K,5%,0.2W	91637	CCF50-2-22002J
A9R4354	311-2240-00			RES,VAR,NONWW:TRMR,200K OHM,20%,0.5W	TK2073	GF06UT2 204 M L
A9R4359	313-1153-00			RES,FXD,FILM:15K,5%,0.2W	91637	CCF50-2-15001J
A9R4360	313-1163-00			RES,FXD,FILM:16K OHM,5%,0.2W	91637	CCF50-2-16001J
A9R4361	313-1220-00			RES,FXD,FILM:22 OHM,5%,0.2W	91637	CCF50-2-22R00J
A9R4362	313-1114-00			RES,FXD,FILM:110K,5%,0.2W	91637	CCF50-2-11002J
A9R4363	313-1123-00			RES,FXD,FILM:12K OHM,5%,0.2W	91637	CCF50-2-12001J
A9R4364	313-1134-00			RES,FXD,FILM:130K OHM 5%,0.2W	91637	CCF50-2-13002J
A9R4365	311-2238-00			RES,VAR,TRMR:CERMET;50K OHM,20%,0.5W	TK2073	GF06UT2 503 M L
A9R4366	313-1124-00			RES,FXD,FILM:120K OHM,5%,0.2W	91637	CCF50-2-12002J
A9R4367	322-3437-00			RES,FXD,FILM:348K OHM,1%,0.2W,TC=T0	91637	CCF501G34802F
A9R4368	322-3293-00			RES,FXD:METAL FILM;11K OHM,1%,0.2W,TC=100	91637	CCF50G11001F
A9R4369	322-3385-00			RES,FXD:METAL FILM;100K OHM,1%,0.2W,TC=100	91637	CCF501G10002F
A9R4370	311-2234-00			RES,VAR,TRMR:CERMET;5K OHM,20%,0.5W	TK2073	GF06UT2 502 M L
A9R4371	313-1101-00			RES,FXD,FILM:100 OHM,5%,0.2W	91637	CCF50-2-100R0J
A9R4372	322-3289-00			RES,FXD:METAL FILM;10K OHM,1%,0.2W,TC=100	91637	CCF50G10001F
A9R4373	322-3289-00			RES,FXD:METAL FILM;10K OHM,1%,0.2W,TC=100	91637	CCF50G10001F

Component Number	Tektronix Part No.	Serial No. Effective	Dscont	Name & Description	Mfr. Code	Mfr. Part No.
A9R4374	313-1163-00			RES,FXD,FILM:16K OHM,5%,0.2W	91637	CCF50-2-16001J
A9R4375	313-1220-00			RES,FXD,FILM:22 OHM,5%,0.2W	91637	CCF50-2-22R00J
A9R4376	313-1101-00			RES,FXD,FILM:100 OHM,5%,0.2W	91637	CCF50-2-100R0J
A9R4377	322-3469-00			RES,FXD,FILM:750K OHM,1%,0.2W,TC=T0	91637	CCF501G75002F
A9R4378	322-3492-00			RES,FXD,FILM:600K OHM,1%,0.2W,TC=T0	91637	CCF501G60002F
A9R4379	313-1153-00			RES,FXD,FILM:15K,5%,0.2W	91637	CCF50-2-15001J
A9R4380	307-0412-00			RES NTWK,FXD,FI:25M OHM,1%,0.5W	64537	FL 1/2 25m +/-
A9R4381	322-3239-00			RES,FXD,FILM:3.01K OHM,1%,0.2W,TC=T0	91637	CCF501G30100F
A9R4391	307-0381-00			RES,FXD,FILM:4.99 MEG OHM,1%,0.5W	64537	FL 1/2 4.99 M +
A9R4401	313-1911-00			RES,FXD,FILM:910 OHM,5%,0.2W	91637	CCF50-2-910R0J
A9R4402	313-1101-00			RES,FXD,FILM:100 OHM,5%,0.2W	91637	CCF50-2-100R0J
A9R4403	313-1823-00			RES,FXD,FILM:82K OHM,5%,0.2W	91637	CCF50-2-82001J
A9R4404	313-1512-00			RES,FXD,FILM:5.1K OHM,5%,0.2W	91637	CCF50-2-51000J
A9R4405	315-0101-03			RES,FXD,CMPSN:100 OHM,5%,0.25W	01121	CB1015
A9R4410	313-1204-00			RES,FXD,FILM:200K,5%,0.2W	91637	CCF50-2-20002J
A9R4411	322-3329-00			RES,FXD,FILM:26.1K OHM.1%,0.2W,TC=T0	91637	CCF501G26101F
A9R4412	313-1331-00			RES,FXD,FILM:330 OHM,5%,0.2W	91637	CCF50-2-330ROJ
A9R4413	315-0101-03			RES,FXD,CMPSN:100 OHM,5%,0.25W	01121	CB1015
A9R4414	322-3335-00			RES,FXD,FILM:30.1K OHM,1%,0.2W,TC=T0	91637	CCF501G30101F
A9R4415	322-3277-00			RES,FXD,FILM:7.5K OHM,1%,0.2W,TC=T0	91637	CCF501G75000F
A9R4416	313-1132-00			RES,FXD,FILM:1.3K OHM,5%,0.2W	91637	CCF50-2-13000J
A9R4421	313-1201-00			RES,FXD,FILM:200 OHM,5%,0.2W	91637	CCF50-2-200R0J
A9R4422	313-1101-00			RES,FXD,FILM:100 OHM,5%,0.2W	91637	CCF50-2-100R0J
A9R4430	311-2296-00			RES,VAR,WW:TRIMMER,2.5 MEGOHMS,0.5W	32997	3386N-HV2-255
A9R4431	307-1265-00			RES,FXD,FILM:13M OHM,5%,0.5W	64537	FL1/2 13 M OHM
A9R4432	313-1153-00			RES,FXD,FILM:15K,5%,0.2W	91637	CCF50-2-15001J
A9R4433	321-1720-00			RES,FXD,FILM:3.24M OHM,1%,0.125W,TC=T0	91637	CMF55116G32403F
A9R4434	307-0381-00			RES,FXD,FILM:4.99 MEG OHM,1%,0.5W	64537	FL 1/2 4.99 M +
A9R4435	322-3402-00			RES,FXD:METAL FILM;150K OHM,1%,0.2W,TC=100	91637	CCF50G15002F
A9R4440	307-1264-00			RES,FXD,FILM:10M OHM,0.5%,0.5W	64537	FL-1/2 10 M +/-
A9R4441	307-1264-00			RES,FXD,FILM:10M OHM,0.5%,0.5W	64537	FL-1/2 10 M +/-
A9R4442	307-1264-00			RES,FXD,FILM:10M OHM,0.5%,0.5W	64537	FL-1/2 10 M +/-
A9R4443	322-3392-00			RES,FXD,FILM:118K OHM,1%,0.2W,TC=T0	91637	CCF501G11802F
A9R4450	322-3443-00			RES,FXD,FILM:402K OHM,1%,0.2W,TC=T0	91637	CCF501G40202F
A9R4451	321-0510-00			RES,FXD,FILM:2.00M OHM,1%,0.125W,TC=T0	91637	CMF55116G20003F
A9R4452	313-1102-00			RES,FXD,FILM:1K OHM,5%,0.2W	91637	CCF50-2-10000J
A9R4453	313-1102-00			RES,FXD,FILM:1K OHM,5%,0.2W	91637	CCF50-2-10000J
A9R4454	313-1433-00			RES,FXD,FILM:43K,5%,0.2W	91637	CCF50-2-43001J
A9R4460	322-3327-00			RES,FXD,FILM:24.9K OHM,1%,0.2W,TC=T0	91637	CCF50-2-G24901F
A9R4461	322-3402-00			RES,FXD:METAL FILM;150K OHM,1%,0.2W,TC=100	91637	CCF50G15002F

Component Number	Tektronix Part No.	Serial No. Effective	Dscont	Name & Description	Mfr. Code	Mfr. Part No.
A9R4463	313-1103-00			RES,FXD,FILM:10K OHM,5%,0.2W	91637	CCF50-2-10001J
A9R4463	313-1203-00			RES,FXD,FILM:20K OHM,5%,0.2W	91637	CCF50-2-20001J
A9R4470	313-1202-00			RES,FXD,FILM:2K OHM,5%,0.2W	91637	CCF50-2-20000J
A9R4471	301-0104-00			RES,FXD,FILM:100K OHM,5%,0.5W	TK1727	SFR30 2322-182-
A9R4472	301-0104-00			RES,FXD,FILM:100K OHM,5%,0.5W	TK1727	SFR30 2322-182-
A9T4340	120-1683-00			XFMR,PWR,STU:HIGH VOLTAGE	75498	120-1683-00
A9T4480	120-1682-00			XFMR,PWR,STU:HIGH VOLTAGE	75498	120-1682-00
A9TP4301	131-0608-00			TERMINAL,PIN:PRESSFIT/PCB,;MALE,STR	22526	48283-018
A9TP4302	131-0608-00			TERMINAL,PIN:PRESSFIT/PCB,;MALE,STR	22526	48283-018
A9U4310	152-0805-00			MODULE,HV:,;4.67KVAC IN,14KVDC OUT	51406	MSR8506
A9U4332	156-1191-01			IC,LINEAR:BIFET,OP-AMP;6MV VOS	01295	TL072ACP
A9U4366	156-0158-07			IC,LINEAR:BIPOLAR,OP-AMP	01295	MC1458P
A9U4367	156-0158-07			IC,LINEAR:BIPOLAR,OP-AMP	01295	MC1458P
A9VR4450	152-0916-00			SEMICOND DVC,DI:ZENER,SI,100V,1%	12954	DZ850730E
A9VR4451	152-0470-00			DIODE,ZENER:,;200V,5%,0.4W	04713	1N992BRL
A9VR4453	152-0470-00			DIODE,ZENER:,;200V,5%,0.4W	04713	1N992BRL
A9VR4454	152-0470-00			DIODE,ZENER:,;200V,5%,0.4W	04713	1N992BRL
A9VR4455	152-0470-00			DIODE,ZENER:,;200V,5%,0.4W	04713	1N992BRL
A9W901	198-5536-00			WIRE SET,ELEC:W/CRT SOCKET	0J7N9	ORDER BY DESC
A9W4300	131-0566-00			BUS,CONDUCTOR:DUMMY RES,0.094 OD X 0.225L	24546	OMA0207

Component Number	Tektronix Part No.	Serial No. Effective	Dscont	Name & Description	Mfr. Code	Mfr. Part No.
A13	307–1154–00			PASSIVE NETWORK:CRT TERMINATOR	80009	307115400

Component Number	Tektronix Part No.	Serial No. Effective	Dscont	Name & Description	Mfr. Code	Mfr. Part No.
A15	670-9670-00	B010100	B010574	CIRCUIT BD ASSY:HOLDOFF COMPARATOR	80009	670967000
A15	671-1058-00	B010575	B050347	CIRCUIT BD ASSY:HOLDOFF COMPARATOR	80009	671105800
A15	671-1058-01	B050348		CIRCUIT BD ASSY:HOLDOFF COMPARATOR	80009	671105801
A15C166	283-5187-00	B010575	B050347	CAP,FXD,CER DI:15PF,5%,100V	04222	12061A150JAT1A
A15C167	283-5188-00	B010575	B050347	CAP,FXD,CER DI:100PF,5%,100V	04222	12061A101JAT1A
A15C168	281-0775-01	B010100	B010574	CAP,FXD,CER DI:0.1UF,20%,50V	04222	SA105E104MAA
A15C168	283-5098-00	B010575		CAP,FXD,CER DI:0.1UF,50WVDC	04222	12065E104ZAT3A
A15C169	281-0863-00	B010100	B010574	CAP,FXD,CER DI:240PF,5%,100V	04222	SA101A241JAA
A15C169	283-5189-00	B010575		CAP,FXD,CER DI:220PF,5%,100V	04222	12061A221JAT1A
A15C170	281-0775-01	B010100	B010574	CAP,FXD,CER DI:0.1UF,20%,50V	04222	SA105E104MAA
A15C170	283-5114-00	B010575		CAP,FXD,CER DI:0.1UF,10%,50V	04222	12065C104KAT1A
A15C172	281-0814-00	B010100	B010574	CAP,FXD,CER DI:100 PF,10%,100V	TK1743	CGB101KEN
A15C172	283-5188-00	B010575		CAP,FXD,CER DI:100PF,5%,100V	04222	12061A101JAT1A
A15C173	281-0863-00	B010100	B010574	CAP,FXD,CER DI:240PF,5%,100V	04222	SA101A241JAA
A15C173	283-5189-00	B010575		CAP,FXD,CER DI:220PF,5%,100V	04222	12061A221JAT1A
A15C174	281-0863-00	B010100	B010574	CAP,FXD,CER DI:240PF,5%,100V	04222	SA101A241JAA
A15C174	283-5189-00	B010575		CAP,FXD,CER DI:220PF,5%,100V	04222	12061A221JAT1A
A15CR169	152-5004-00	B010575	B050367	DIODE,SIG:,ULTRA FAST;70V,0.15A,6NS	25088	BAV99-E6327
A15CR169	152-5018-00	B050368		DIODE,SIG:,ULTRA FAST;100V,0.74VF,4NS,2.0PF	27014	MMBD1203-HIGH
A15CR170	152-5004-00	B010575	B050367	DIODE,SIG:,ULTRA FAST;70V,0.15A,6NS	25088	BAV99-E6327
A15CR170	152-5018-00	B050368		DIODE,SIG:,ULTRA FAST;100V,0.74VF,4NS,2.0PF	27014	MMBD1203-HIGH
A15CR171	152-5004-00	B010575	B050367	DIODE,SIG:,ULTRA FAST;70V,0.15A,6NS	25088	BAV99-E6327
A15CR171	152-5018-00	B050368		DIODE,SIG:,ULTRA FAST;100V,0.74VF,4NS,2.0PF	27014	MMBD1203-HIGH
A15CR172	152-5000-00	B010575	B050554	DIODE,SIG:,ULTRA FAST;70V,0.15A,6NS	25088	BAV70T3 (E6327)
A15CR172	152-5047-00	B050555		DIODE,SIG:,ULTRA FAST;100V,0.74VF,4NS,2.0PF	27014	MMBD1204
A15CR173	152-5004-00	B010575	B050367	DIODE,SIG:,ULTRA FAST;70V,0.15A,6NS	25088	BAV99-E6327
A15CR173	152-5018-00	B050368		DIODE,SIG:,ULTRA FAST;100V,0.74VF,4NS,2.0PF	27014	MMBD1203-HIGH
A15J160	131-1425-00			CONN,HDR:PCB,;MALE,RTANG,1 X 36,0.1 CTR	22526	65521-136
A15Q157	151-0190-00	B010100	B010574	TRANSISTOR,SIG:BIPOLAR,NPN;40V,200MA	04713	2N3904
A15Q157	151-5001-00	B010575		TRANSISTOR,SIG:BIPOLAR,NPN;40V,200MA	04713	MMBT3904T1/T2
A15Q158	151-0190-00	B010100	B010574	TRANSISTOR,SIG:BIPOLAR,NPN;40V,200MA	04713	2N3904
A15Q158	151-5001-00	B010575		TRANSISTOR,SIG:BIPOLAR,NPN;40V,200MA	04713	MMBT3904T1/T2
A15Q159	151-0190-00	B010100	B010574	TRANSISTOR,SIG:BIPOLAR,NPN;40V,200MA	04713	2N3904
A15Q159	151-5001-00	B010575		TRANSISTOR,SIG:BIPOLAR,NPN;40V,200MA	04713	MMBT3904T1/T2
A15Q160	151-0190-00	B010100	B010574	TRANSISTOR,SIG:BIPOLAR,NPN;40V,200MA	04713	2N3904
A15Q160	151-5001-00	B010575		TRANSISTOR,SIG:BIPOLAR,NPN;40V,200MA	04713	MMBT3904T1/T2
A15Q161	151-0190-00	B010100	B010574	TRANSISTOR,SIG:BIPOLAR,NPN;40V,200MA	04713	2N3904
A15Q161	151-5001-00	B010575		TRANSISTOR,SIG:BIPOLAR,NPN;40V,200MA	04713	MMBT3904T1/T2
A15Q162	151-5029-00	B010575	B050347	TRANSISTOR,SIG:BIPOLAR,NPN;15V,500MA	04713	MMBT2369LT1
A15R158	313-1102-00	B010100	B010574	RES,FXD,FILM:1K OHM,5%,0.2W	91637	CCF50-2-10000J

Component Number	Tektronix Part No.	Serial No. Effective	Dscont	Name & Description	Mfr. Code	Mfr. Part No.
A15R158	321-5018-00	B010575		RES,FXD:METAL FILM;1.0K OHM,1%,0.125W	91637	CRCW12061001FT
A15R164	321-5026-00	B010575	B050347	RES,FXD:METAL FILM;4.75K OHM,1%,0.125W	91637	CRCW12064751FT
A15R165	321-5018-00	B010575	B050347	RES,FXD:METAL FILM;1.0K OHM,1%,0.125W	91637	CRCW12061001FT
A15R166	321-5032-00	B010575		RES,FXD:METAL FILM;15.0K OHM,1%,0.125W	91637	CRCW12061502FT
A15R167	313-1272-00	B010100	B010574	RES,FXD,FILM:2.7K OHM,5%,0.2W	91637	CCF50-2-27000J
A15R167	321-5023-00	B010575		RES,FXD:METAL FILM;2.74K OHM,1%,0.125W	91637	CRCW12062741FT
A15R168	313-1102-00	B010100	B010574	RES,FXD,FILM:1K OHM,5%,0.2W	91637	CCF50-2-10000J
A15R168	321-5018-00	B010575		RES,FXD:METAL FILM;1.0K OHM,1%,0.125W	91637	CRCW12061001FT
A15R169	313-1104-00	B010100	B010574	RES,FXD,FILM:100K OHM,5%,0.2W	91637	CCF50-2-10002J
A15R169	321-5047-00	B010575		RES,FXD:METAL FILM;100K OHM,1%,0.125W	91637	CRCW12061003FT
A15R175	313-1102-00	B010100	B010574	RES,FXD,FILM:1K OHM,5%,0.2W	91637	CCF50-2-10000J
A15R175	321-5018-00	B010575		RES,FXD:METAL FILM;1.0K OHM,1%,0.125W	91637	CRCW12061001FT
A15R176	313-1153-00	B010100	B010574	RES,FXD,FILM:15K,5%,0.2W	91637	CCF50-2-15001J
A15R176	321-5032-00	B010575		RES,FXD:METAL FILM;15.0K OHM,1%,0.125W	91637	CRCW12061502FT
A15R177	313-1752-00	B010100	B010574	RES,FXD,FILM:7.5K OHM,5%,0.2W	91637	CCF50-2-75000J
A15R177	321-5032-00	B010575		RES,FXD:METAL FILM;15.0K OHM,1%,0.125W	91637	CRCW12061502FT
A15R178	313-1101-00	B010100	B010574	RES,FXD,FILM:100 OHM,5%,0.2W	91637	CCF50-2-100R0J
A15R178	321-5006-00	B010575		RES,FXD:METAL FILM;100 OHM,1%,0.125W	91637	CRCW12061000FT
A15R179	313-1151-00	B010100	B010574	RES,FXD,FILM:150 OHM,5%,0.2W	91637	CCF50-2-150R0J
A15R179	321-5006-00	B010575		RES,FXD:METAL FILM;100 OHM,1%,0.125W,TC=100	91637	CRCW12061000FT
A15U168	156-1226-00	B010100	B010574	IC,LINEAR:BIPOLAR,COMPARATOR;DUAL	18324	LM319N
A15U168	156-5119-00	B010575		IC,LINEAR:BIPOLAR,COMPARATOR;DUAL	18324	LM319D
A15U169	156-1540-00	B010100	B010574	MICROCKT,LINEAR:DIODE ARRAY	27014	FSA2619P
A15U169	156-5174-00	B010575	B050347	IC,DIGITAL:LSTTL,MULTIVIBRATOR;DUAL	01295	SN74LS221D

Component Number	Tektronix Part No.	Serial No. Effective	Dscont	Name & Description	Mfr. Code	Mfr. Part No.
C10	281-0697-00			CAP,FXD,CER DI:5000PF,+100-0%,100V	12294	1250-054
L91	119-1478-01			COIL,TUBE DEFL:FXD,TRACE ROTATION	TK1177	06244
R134	311-2312-01			RES,VAR,NONWW:PNL,5K OHM,20%,0.5W	12697	392-CM45223
R351	311-2312-01			RES,VAR,NONWW:PNL,5K OHM,20%,0.5W	12697	392-CM45223
R352	311-2312-01			RES,VAR,NONWW:PNL,5K OHM,20%,0.5W	12697	392-CM45223
R975	311-2313-01			RES,VAR,NONWW:5K OHM,20%,0.5W	12697	392-CM45224
R976	311-2312-01			RES,VAR,NONWW:PNL,5K OHM,20%,0.5W	12697	392-CM45223
R977	311-2313-01			RES,VAR,NONWW:5K OHM,20%,0.5W	12697	392-CM45224
V900	154-0896-01			ELECTRON TUBE:CRT ASSY,FINISHED	80009	154089601

DIAGRAMS AND CIRCUIT BOARD ILLUSTRATIONS

Symbols

Graphic symbols and class designation letters are based on ANSI Standard Y32.2-1975.

Logic symbology is based on ANSI Y32.14-1973 in terms of positive logic. Logic symbols depict the logic function performed and may differ from the manufacturer's data.

The overline on a signal name indicates that the signal performs its intended function when it is in the low state.

Abbreviations are based on ANSI Y1.1-1972.

Other ANSI standards that are used in the preparation of diagrams by Tektronix, Inc. are:

Y14.15, 1966	Drafting Practices.
Y14.2, 1973	Line Conventions and Lettering.
Y10.5, 1968	Letter Symbols for Quantities Used in Electrical Science and Electrical Engineering.

American National Standard Institute
1430 Broadway
New York, New York 10018

Component Values

Electrical components shown on the diagrams are in the following units unless noted otherwise:

Capacitors = Values one or greater are in picofarads (pF). Values less than one are in microfarads (μF).
Resistors = Ohms (Ω).

The information and special symbols below may appear in this manual.

Assembly Numbers and Grid Coordinates

Each assembly in the instrument is assigned an assembly number (e.g., A20). The assembly number appears on the circuit board outline on the diagram, in the title for the circuit board component location illustration, and in the lookup table for the schematic diagram and corresponding component locator illustration. The Replaceable Electrical Parts list is arranged by assemblies in numerical sequence; the components are listed by component number *(see following illustration for constructing a component number).

The schematic diagram and circuit board component location illustration have grids. A lookup table with the grid coordinates is provided for ease of locating the component. Only the components illustrated on the facing diagram are listed in the lookup table. When more than one schematic diagram is used to illustrate the circuitry on a circuit board, the circuit board illustration may only appear opposite the first diagram on which it was illustrated; the lookup table will list the diagram number of other diagrams that the circuitry of the circuit board appears on.

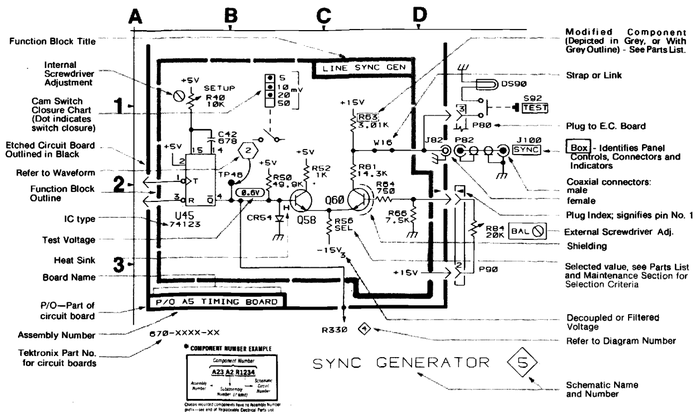

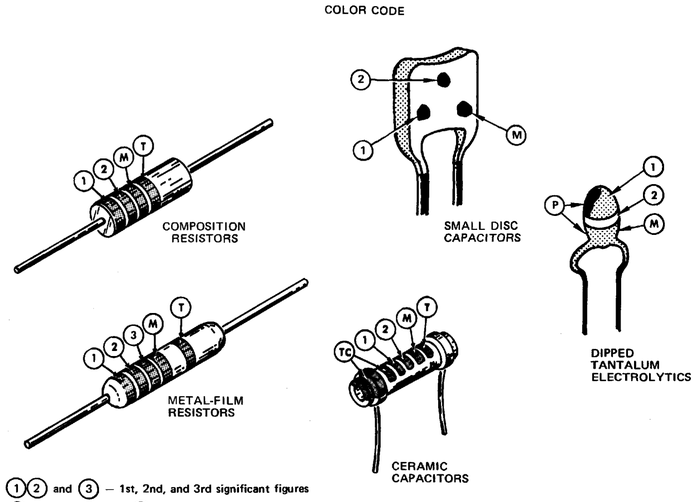

COLOR	SIGNIFICANT FIGURES	RESISTORS		CAPACITORS			DIPPED TANTALUM VOLTAGE RATING
		MULTIPLIER	TOLERANCE	MULTIPLIER	TOLERANCE over 10 pF	TOLERANCE under 10 pF	
BLACK	0	1	——	1	±20%	±2 pF	4 VDC
BROWN	1	10	±1%	10	±1%	±0.1 pF	6 VDC
RED	2	10^2 or 100	±2%	10^2 or 100	±2%	——	10 VDC
ORANGE	3	10^3 or 1 K	±3%	10^3 or 1000	±3%	——	15 VDC
YELLOW	4	10^4 or 10 K	±4%	10^4 or 10,000	+100% –9%	——	20 VDC
GREEN	5	10^5 or 100 K	±½%	10^5 or 100,000	±5%	±0.5 pF	25 VDC
BLUE	6	10^6 or 1 M	±¼%	10^6 or 1,000,000	——	——	35 VDC
VIOLET	7	——	±1/10%	——	——	——	50 VDC
GRAY	8	——	——	10^{-2} or 0.01	+80% –20%	±0.25 pF	——
WHITE	9	——	——	10^{-1} or 0.1	±10%	±1 pF	3 VDC
GOLD	–	10^{-1} or 0.1	±5%	——	——	——	——
SILVER	–	10^{-2} or 0.01	±10%	——	——	——	——
NONE	–	——	±20%	——	±10%	±1 pF	——

(1861-20A) 2662-48

Figure 10-1. Color codes for resistors and capacitors.

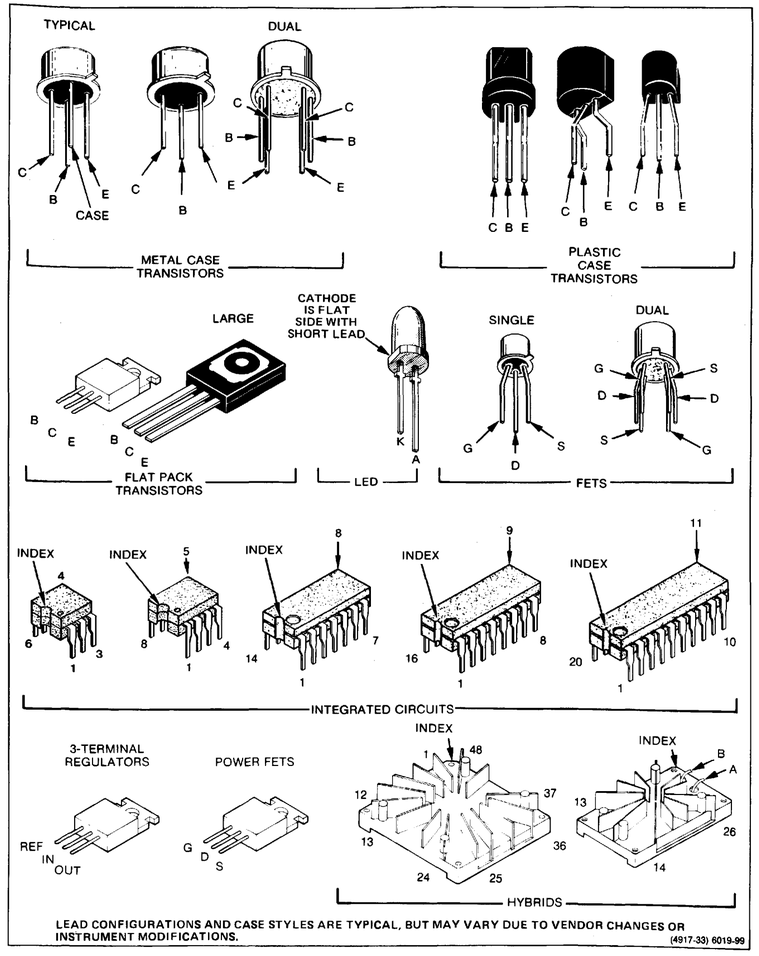

Figure 10-2. Semiconductor lead configurations.

To identify any component mounted on a circuit board and to locate that component in the appropriate schematic diagram

1. Locate the Circuit Board Illustration

a. Identify the particular circuit board that the component is located on by using the Circuit Board Location illustration (Figure 9-5) to determine the Assembly Number.

b. In the manual locate and pull out tabbed page whose title corresponds with the Assembly Number of the circuit board. Circuit board assembly numbers and board nomenclature are printed on the back side of the tabs (facing the rear of the manual).

2. Determine the Circuit Number

a. Compare the circuit board with its illustration and locate the desired component by area and shape on the illustration.

b. Scan the table adjacent to the Circuit Board Illustration and find the Circuit Number of the desired component.

c. Determine the Schematic Diagram Number in which the component is located.

3. Locate the Component on the Schematic Diagram

a. Locate and pull out tabbed page whose number and title correspond with the Schematic Diagram Number just determined in the table. Schematic diagram nomenclature and numbers are printed on the front side of the tabs (facing the front of the manual).

b. Scan the Component Location Table adjacent to the schematic diagram and find the Circuit Number of the desired component.

c. Under the SCHEM LOCATION column, read the grid coordinates for the desired component.

d. Using the Circuit Number and grid coordinates, locate the component on the schematic diagram.

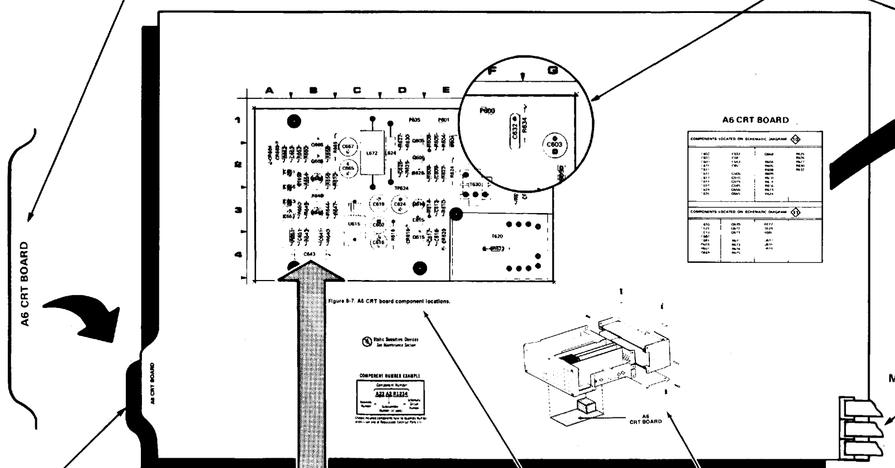

A6 CRT BOARD

COMPONENTS LOCATED ON SCHEMATIC DIAGRAM 10			
C602	C632	Q668	R625
C603	C641		R626
C609	C643	R604	R627
C671	C651	R605	R630
C615		R608	R632
C616	Q606	R609	
C617	Q610	R610	
C618	Q615	R614	
C619	Q645	R616	
C624	Q656	R623	
C626	Q665	R624	

COMPONENTS LOCATED ON SCHEMATIC DIAGRAM 11			
C670	Q670	R677	
C671	Q672	R679	
C673	Q673	R680	
C680			
C681	R671	U617	
P603	R673	U618	
P607	R674	U619	
Q669	R675		

CRT CIRCUIT DIAGRAM 10

A6 ASSEMBLY

CIRCUIT NUMBER	SCHEM LOCATION	BOARD LOCATION	CIRCUIT NUMBER	SCHEM LOCATION	BOARD LOCATION
C602	2C	3C	Q656	2F	2B
C603	1C	1G	Q665	1G	1B
C609	4E	3E	Q668	2G	2B
C612	7C	3E			
C615	7C	3D	R604	4C	1E
C616	2C	3C	R605	5D	1E
C617	7D	3D	R608	4E	1D
C618	7E	3E	R609	4E	2D
C619	6E	3C	R610	7B	3E
C624	4F	3D	R614	7C	3D
C626	7G	2D	R616	1C	3D
C632	8G	1F	R623	4D	2E
C643	3D	4B	R625	7F	2D
C651	3E	3B	R626	7F	2D
		3B	R627	7G	1D
			R630	4D	[illegible]
Q606	4E	2D			
Q610	7C	3D	TP624	3B	2D
Q615	7D	3D			
Q645	3E	3B	U615	1D	3C

CHASSIS MOUNTED PARTS

CIRCUIT NUMBER	SCHEM LOCATION	BOARD LOCATION	CIRCUIT NUMBER	SCHEM LOCATION	BOARD LOCATION
L635	51	CHASSIS	V635	6J	CHASSIS

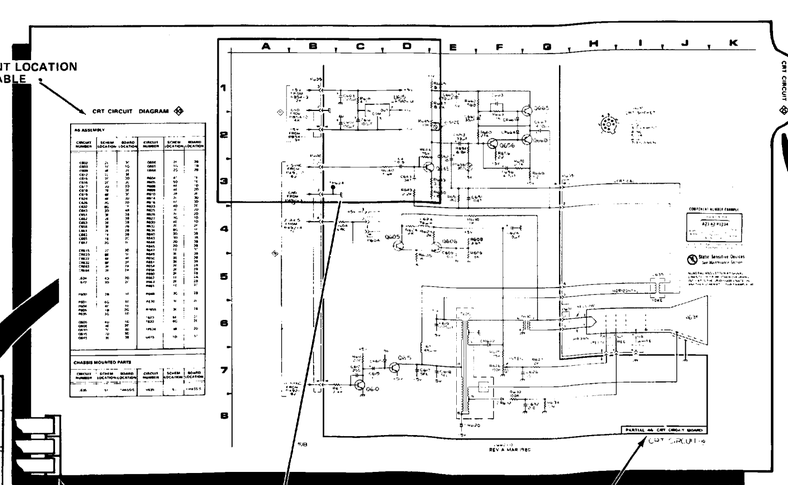

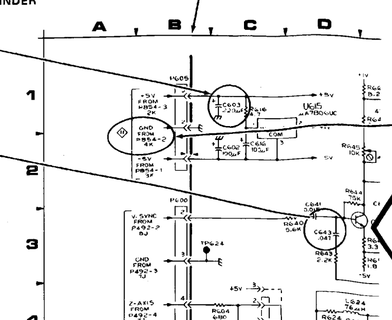

Numeral and letter at signal lines to or from other diagrams indicates the grid coordinates on another schematic (for example: 4K)

To identify any component in a schematic diagram and to locate that component on its respective circuit board.

4. Determine the Circuit Board Illustration and Component Location

a. From the schematic diagram, determine the Assembly Number of the circuit board on which the component is mounted. This information is boxed and located in a corner of the heavy line that distinguishes the board outline.

b. Scan the Component Location Table for the Assembly Number just determined and find the Circuit Number of the desired component.

c. Under the BOARD LOCATION column, read the grid coordinates for the desired component.

5. Locate the Component on the Circuit Board

a. In the manual, locate and pull out the tabbed page whose title and Assembly Number correspond with the desired circuit board. This information is on the back side of the tabs.

b. Using the Circuit Number and grid coordinates, locate the component on the Circuit Board Illustration.

c. In the circuit board location illustration, determine the location of the circuit board in the instrument.

d. Find the circuit board in the instrument and compare it with its illustration in the manual to locate the desired component on the board.

4204-58 A

Figure 10-3. Locating components on schematic diagrams and circuit board illustrations.

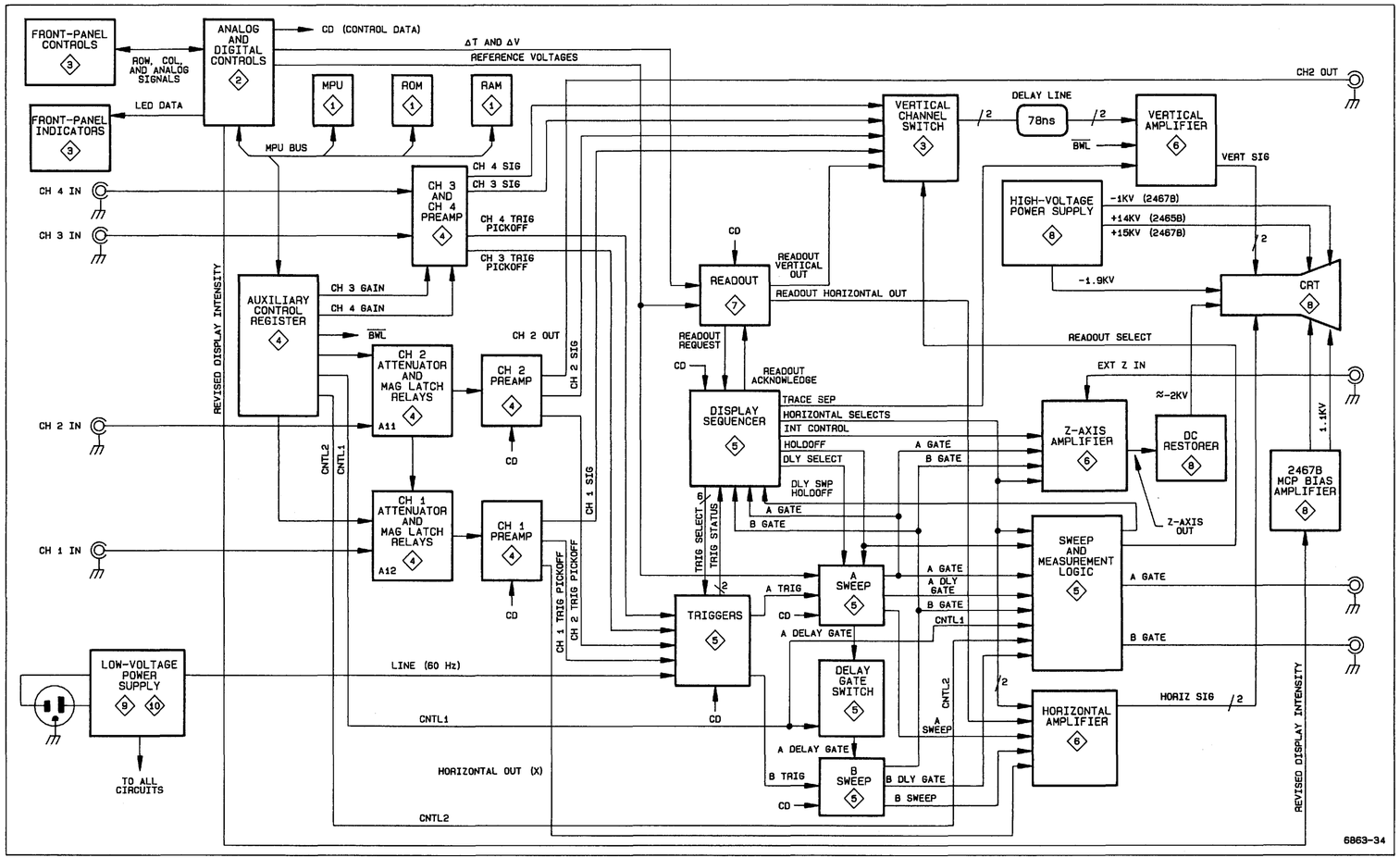

Figure 10-4. Instrument block diagram.

TEST WAVEFORM SETUP INFORMATION

The numbered waveforms below were obtained at the test points indicated on the accompanying schematic diagram and board dolly. The waveforms are representative of signals that may be expected at the associated points whenever the instrument is running.

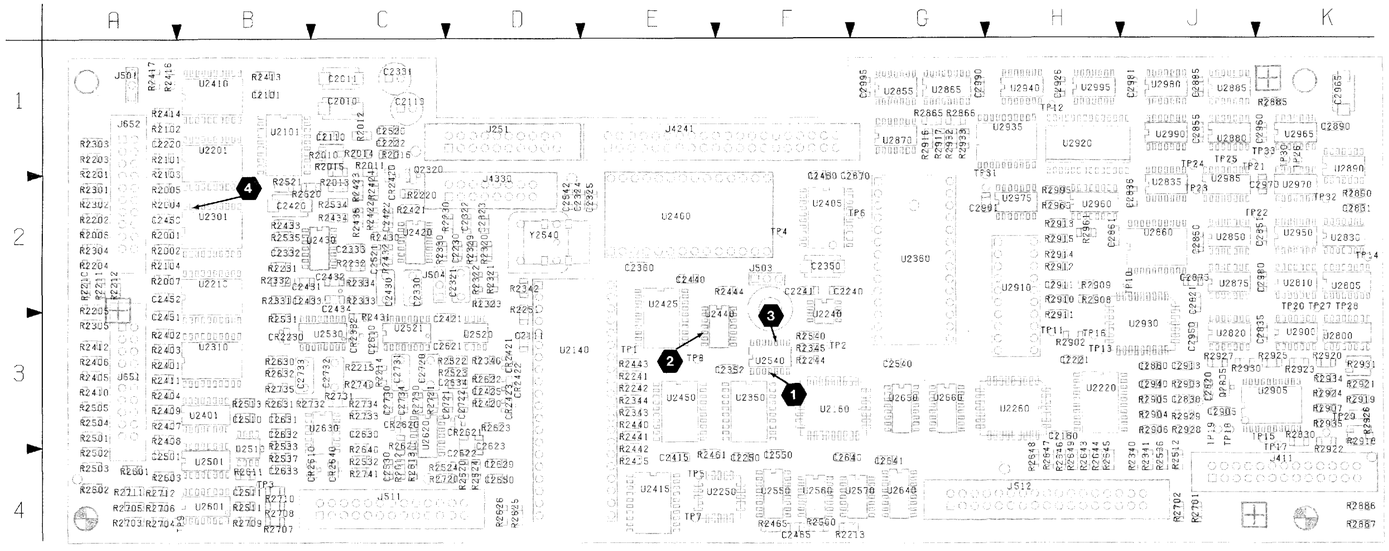

Figure 10-5a. A5—Control/Readout/Buffer board (SN B050000 & Above).

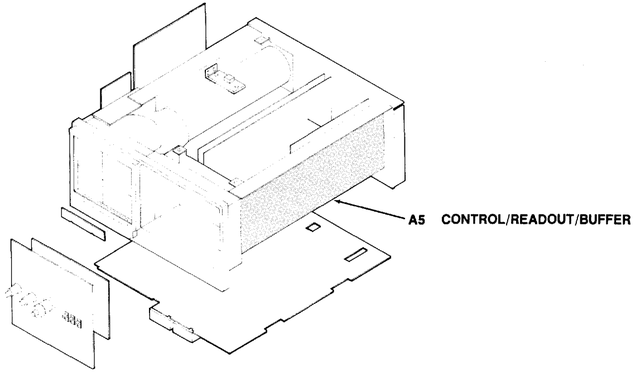

Static Sensitive Devices
See Maintenance Section

COMPONENT NUMBER EXAMPLE

Component Number

A23 A2 R1234

Assembly Number — Subassembly Number (if used) — Schematic Circuit Number

Chassis-mounted components have no Assembly Number prefix—see end of Replaceable Electrical Parts List.

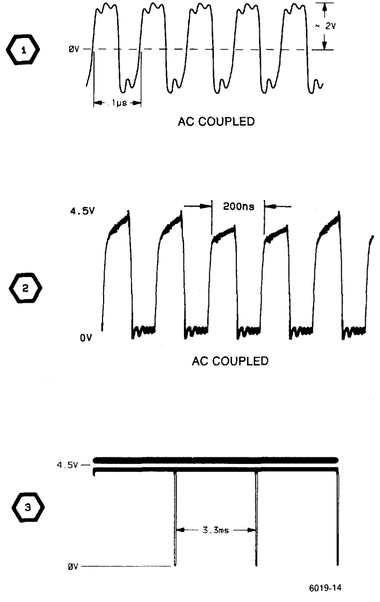

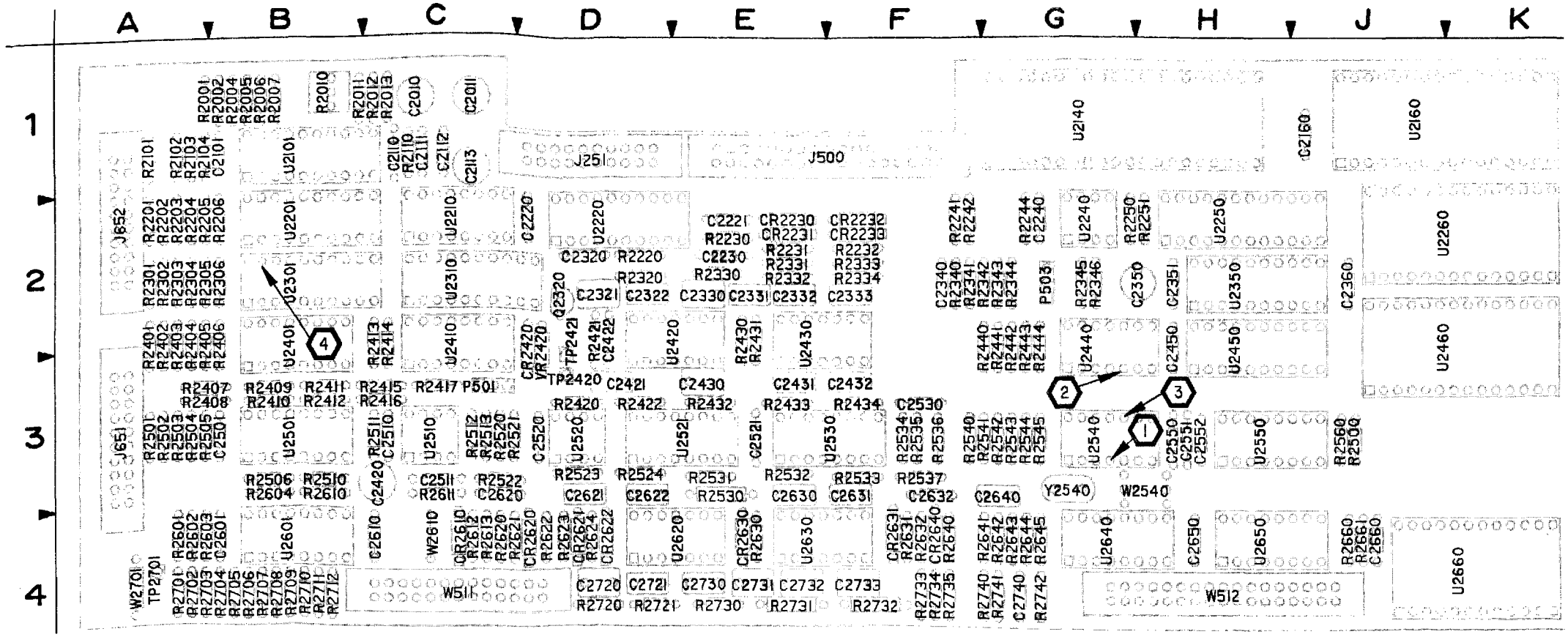

Figure 10-5b. A5—Control board (SN B049999 & Below).

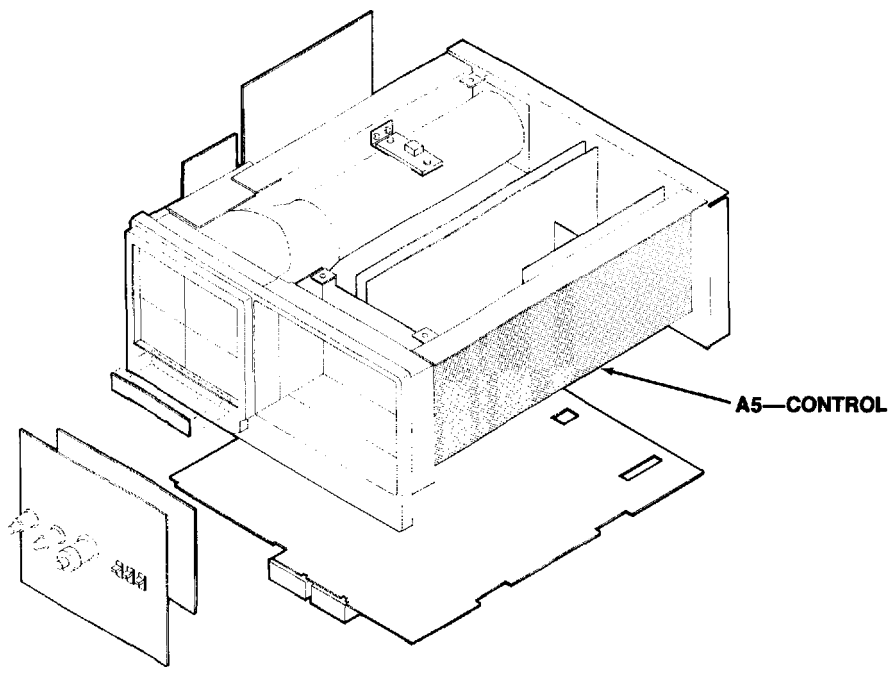

Static Sensitive Devices
See Maintenance Section

COMPONENT NUMBER EXAMPLE

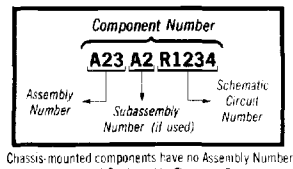

Chassis-mounted components have no Assembly Number prefix—see end of Replaceable Electrical Parts List.

TEST WAVEFORM SETUP INFORMATION

The numbered waveforms below were obtained at the test points indicated on the accompanying schematic diagram and board dolly. The waveforms are representative of signals that may be expected at the associated points whenever the instrument is running.

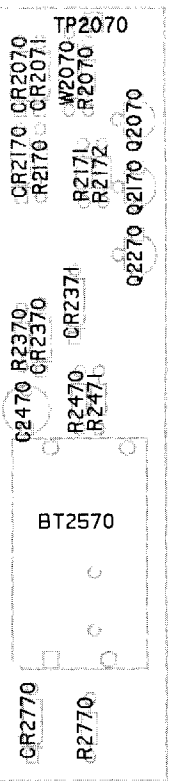

6863-21

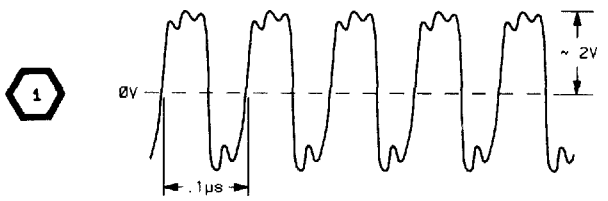

AC COUPLED

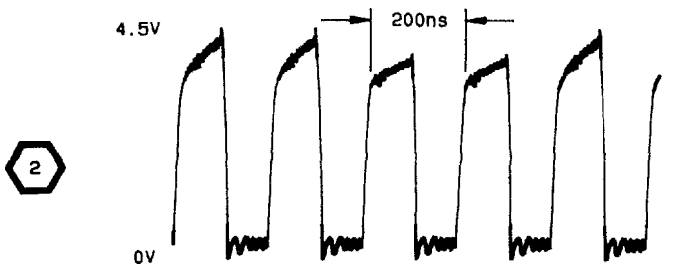

AC COUPLED

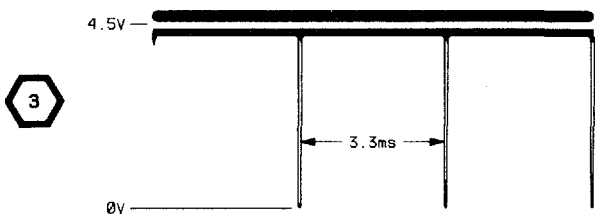

6019-14

A5—CONTROL BOARD & WAVEFORMS FIG. 10-5b
(SN B049999 & BELOW)

A5—CONTROL/READOUT/BUFFER BOARD (SN B050000 & ABOVE)

CIRCUIT NUMBER	SCHEM NUMBER	CIRCUIT NUMBER	SCHEM NUMBER	CIRCUIT NUMBER	SCHEM NUMBER	CIRCUIT NUMBER	SCHEM NUMBER	CIRCUIT NUMBER	SCHEM NUMBER	CIRCUIT NUMBER	SCHEM NUMBER
C2010	2	C2855	12	R2210	2	R2521	2	R2918	7	U2360	1
C2011	12	C2860	12	R2211	2	R2522	2	R2919	7	U2360	12
C2101	12	C2861	12	R2212	2	R2523	2	R2920	7	U2401	2
C2110	2	C2870	12	R2213	1	R2524	2	R2921	7	U2401	12
C2111	12	C2875	12	R2214	1	R2531	2	R2922	7	U2405	1
C2113	12	C2885	12	R2215	1	R2532	2	R2923	7	U2405	12
C2160	12	C2890	12	R2220	2	R2533	2	R2924	7	U2410	2
C2220	12	C2901	12	R2230	2	R2534	2	R2925	7	U2410	12
C2221	12	C2905	12	R2231	2	R2535	2	R2926	7	U2415	1
C2222	12	C2911	7	R2232	2	R2536	2	R2927	7	U2415	12
C2230	2	C2913	12	R2241	1	R2537	2	R2928	7	U2420	2
C2240	12	C2926	12	R2242	1	R2540	1	R2929	7	U2420	12
C2241	1	C2940	12	R2244	1	R2560	1	R2930	7	U2425	1
C2250	12	C2950	12	R2251	1	R2601	2	R2931	7	U2425	12
C2321	2	C2960	12	R2301	2	R2602	2	R2932	7	U2430	2
C2322	2	C2965	12	R2302	2	R2603	2	R2933	7	U2430	12
C2323	2	C2970	12	R2303	2	R2611	2	R2934	7	U2440	1
C2324	2	C2980	12	R2304	2	R2612	2	R2935	7	U2440	12
C2325	2	C2981	12	R2305	2	R2613	2	R2960	7	U2450	1
C2330	2	C2990	12	R2320	1	R2620	2	R2961	7	U2450	12
C2331	12	C2995	12	R2321	2	R2621	2	R2995	7	U2460	1
C2332	2			R2322	2	R2622	2			U2460	12
C2333	2	CR2230	2	R2323	2	R2623	2	TP1	1	U2501	2
C2350	1	CR2332	2	R2329	2	R2624	2	TP2	1	U2501	12
C2352	12	CR2420	2	R2330	2	R2625	2	TP3	1	U2510	2
C2360	1	CR2421	2	R2331	2	R2626	2	TP4	1	U2510	12
C2415	12	CR2422	2	R2332	2	R2630	2	TP5	1	U2520	2
C2420	2	CR2423	2	R2333	2	R2631	2	TP6	1	U2520	12
C2421	2	CR2610	2	R2334	2	R2632	2	TP7	1	U2521	2
C2422	2	CR2620	2	R2340	2	R2640	2	TP8	1	U2521	12
C2425	2	CR2621	2	R2341	2	R2643	2	TP9	2	U2530	2
C2430	2	CR2640	2	R2342	1	R2644	2	TP10	7	U2530	12
C2431	2			R2343	1	R2645	2	TP11	7	U2540	1
C2432	2	J251	1	R2344	1	R2646	2	TP12	7	U2540	12
C2433	2	J251	12	R2345	1	R2647	2	TP13	7	U2550	1
C2434	2	J411	7	R2346	2	R2648	2	TP14	7	U2550	12
C2440	12	J411	12	R2401	2	R2649	1	TP15	7	U2560	1
C2450	12	J501	2	R2402	2	R2701	2	TP16	7	U2560	12
C2451	12	J503	1	R2403	2	R2702	2	TP17	7	U2570	1
C2452	12	J504	2	R2404	2	R2703	2	TP18	7	U2570	12
C2460	12	J511	2	R2405	2	R2704	2	TP19	7	U2601	2
C2465	1	J511	12	R2406	2	R2705	2	TP20	7	U2601	12
C2501	12	J512	1	R2407	2	R2706	2	TP21	7	U2620	2
C2510	12	J512	2	R2408	2	R2707	2	TP22	7	U2620	12
C2511	2	J512	12	R2409	2	R2708	2	TP23	7	U2630	2
C2520	12	J651	2	R2410	2	R2709	2	TP24	7	U2630	12
C2521	2	J652	1	R2411	2	R2710	2	TP25	7	U2640	1
C2530	12	J652	2	R2412	2	R2711	2	TP26	7	U2640	12
C2540	12	J652	12	R2413	2	R2712	2	TP27	7	U2650	1
C2542	12	J4241	1	R2414	2	R2720	2	TP28	7	U2650	12
C2550	12	J4241	2	R2415	1	R2721	2	TP29	7	U2660	1
C2610	12	J4241	12	R2416	2	R2730	2	TP30	7	U2660	12
C2621	2	J4330	1	R2417	2	R2731	2	TP31	7	U2800	7
C2622	2	J4330	12	R2420	2	R2732	2	TP32	7	U2800	12
C2623	2			R2421	2	R2733	2	TP33	7	U2805	7
C2629	12	Q2320	2	R2422	2	R2734	2			U2805	12
C2630	2	Q2805	7	R2423	2	R2735	2	U2101	2	U2810	7
C2631	2			R2424	2	R2740	2	U2101	12	U2810	12
C2632	2	R2001	2	R2430	2	R2741	2	U2140	1	U2820	7
C2633	2	R2002	2	R2431	2	R2830	7	U2140	12	U2820	12
C2634	2	R2004	2	R2432	2	R2865	7	U2160	1	U2830	7
C2640	12	R2005	2	R2433	2	R2866	7	U2160	12	U2830	12
C2641	12	R2006	2	R2434	2	R2885	7	U2201	2	U2835	7
C2650	12	R2007	2	R2435	2	R2890	7	U2201	12	U2835	12
C2720	2	R2010	2	R2440	1	R2902	7	U2210	2	U2850	7
C2721	2	R2011	2	R2441	1	R2903	7	U2210	12	U2850	12
C2722	2	R2012	2	R2442	1	R2904	7	U2220	2	U2855	7
C2730	2	R2013	2	R2443	1	R2905	7	U2220	12	U2855	12
C2731	2	R2014	2	R2444	1	R2906	7	U2240	1	U2860	7
C2732	2	R2015	2	R2461	1	R2907	7	U2240	12	U2860	12
C2733	2	R2016	2	R2465	1	R2908	7	U2250	1	U2865	7
C2734	2	R2101	2	R2501	2	R2909	7	U2250	12	U2865	12
C2820	12	R2102	2	R2502	2	R2910	7	U2260	1	U2870	7
C2821	12	R2103	2	R2503	2	R2911	7	U2260	12	U2870	12
C2830	12	R2104	2	R2504	2	R2912	7	U2301	2	U2875	7
C2831	12	R2201	2	R2505	2	R2913	7	U2301	12	U2875	12
C2835	12	R2202	2	R2511	2	R2914	7	U2310	2	U2880	7
C2836	12	R2203	2	R2512	2	R2915	7	U2310	12	U2880	12
C2850	12	R2204	2	R2513	2	R2916	7	U2350	1	U2885	7
C2851	12	R2205	2	R2520	2	R2917	7	U2350	12	U2885	12

A5—CONTROL/READOUT/BUFFER BOARD (cont) (SN B050000 & ABOVE)

CIRCUIT NUMBER	SCHEM NUMBER	CIRCUIT NUMBER	SCHEM NUMBER	CIRCUIT NUMBER	SCHEM NUMBER	CIRCUIT NUMBER	SCHEM NUMBER	CIRCUIT NUMBER	SCHEM NUMBER	CIRCUIT NUMBER	SCHEM NUMBER
U2890	7	U2910	12	U2940	7	U2965	12	U2985	7	Y2540	1
U2890	12	U2920	7	U2940	12	U2970	7	U2985	12	Y2540	12
U2900	7	U2920	12	U2950	7	U2970	12	U2990	7		
U2900	12	U2930	7	U2950	12	U2975	7	U2990	12		
U2905	7	U2930	12	U2960	7	U2975	12	U2995	7		
U2905	12	U2935	7	U2960	12	U2980	7	U2995	12		
U2910	7	U2935	12	U2965	7	U2980	12				

ACRONYM DICTIONARY

The following listing explains some of the less obvious acronyms and signal labels used on the schematics. Acronyms and labels not shown in this listing may be included in the circuit descriptions (Section 3) and should be obvious if thought is given to the intended circuit function.

+CH1 SIG—+CH4 SIG...positive preamp output signals
+HORIZ SIG...positive horizontal output signal
+VERT SIG...positive vertical output signal
−CH1 SIG—−CH4 SIG...negative preamp output signals
−HORIZ SIG...negative horizontal output signal
−VERT SIG...negative vertical output signal
A SWP CLK...A sweep clock
A TIM REF...A timing reference
A TRIG CLK...A trigger clock
A TRIG LVL...A trigger level
A0—A15...address bits 0—15
AHO...A holdoff
ATTN CLK...attenuator clock
ATTN STRB...attenuator strobe
B SWP CLK...B sweep clock
B TIM REF...B timing reference
B TRIG CLK...B trigger clock
B TRIG LVL...B trigger level
B1—B12...DAC input bits 1—12
BD0—BD7...buffered data bits 0—7
BDCA...bypass delay comparator A
BDCB...bypass delay comparator B
BDTL...B delayed trigger level selector
BHO...B holdoff
BWLB...bandwidth limited B signal
BYP...bypass
CA0—CA6...character address bits 0—7
CD1—CD6...character data bits 1—7
CH1 OVL...channel 1 overload
CH1 PA CLK...CH1 preamp clock
CH1 POS...channel 1 position
CH1 PRB...channel 1 probe
CH1 TRIG PICKOFF...channel 1 trigger pickoff
CH1 VAR...channel 1 variable
CH2 APO+...channel 2 auxiliary pickoff, noninverting
CH2 OVL...channel 2 overload
CH2 PA CLK...channel 2 preamp clock
CH2 POS...channel 2 position
CH2 PRB...channel 2 probe
CH2 TRIG PICKOFF...channel 2 trigger pickoff
CH2 VAR...channel 2 variable
CH3 PRB...channel 3 probe
CH3 TRIG PICKOFF...channel 3 trigger pickoff
CH4 POS...channel 4 position
CH4 PRB...channel 4 probe
CH4 TRIG PICKOFF...channel 4 trigger pickoff

CLK...clock
CNTR RESET...counter reset
COL 0—COL 4...column 0—column 4...switch matrix columns 0—4
CONT DATA...control data
CTC...capacitor, timing compensation
D0—D7...data bits 0—7
DAC LSB CLK...DAC least significant data bits clock
DAC MSB CLK...DAC most significant data bits clock
DAC MUX1 IN...DAC multiplexer 1 input
DAC MUX0 INH...DAC multiplexer 0 inhibit
DAC MUX1 INH...DAC multiplexer 1 inhibit
DAC MUX2 INH...DAC multiplexer 2 inhibit
DAC MUX1 A0...DAC multiplexer 1, address bit 0
DAC MUX1 A1...DAC multiplexer 1, address bit 1
DAC MUX1 A2...DAC multiplexer 1, address bit 2
DAC MUX1 IN...DAC multiplexer 1 input
DD0—DD7...dot data bits 0—7
DI...display intensity
DIR...display intensity revised
DISP SEQ CLK...display sequencer clock
DLY A...delay A
DLY B...delay B
DLY REF 0...delay reference 0
DLY REF 1...delay reference 1
DOTOK...dot ok
FB...feedback
HORIZ OUT...channel 1 output to horizontal in X-Y
HORIZ POS...horizontal position
HORIZ VAR...horizontal variable
LED CLK...LED clock
LED DATA...front panel LED data
LINE TRIG...60 Hz line trigger
LINE UP...ac power is above minimum
MR...memory ready
PORT1 CLK...port 1 clock
PORT2 CLK...port 2 clock
PORT3 INH...port 3 inhibit
PWR DOWN...power down
PWR UP...power up
QP1+...quad pole 1 plus
QP2+...quad pole 2 plus
R/$\overline{W}$ ...read/write
R/$\overline{W}$ DLY'D...read/write delayed
R/$\overline{W}$ DLYD...read/write delayed
READOUT HORIZ OUT...readout horizontal output
READOUT VERT OUT...readout vertical output

RO DO...readout data out
ROI...readout intensity
ROIR...readout intensity revised
ROSFRAME...readout subframe
ROW 0—ROW 9...switch matrix rows 0—9
SEC/DIV VAR...SEC/DIV variable
SSA...A selected signal source
TRACE SEP...trace separation
TRIG LED...trigger LED
TRIG LEVEL...trigger level
TRIG STAT STRB...trigger status strobe
TS1+TS2...trace separation 1 and 2
TSO...trigger status output
TXY...triggered X-Y
VAR OCT...variable octopole (geometry)
VMA...valid memory address
VQ OUT...variable quadrapole output
VZ OUT...variable Z-axis output
$\overline{\text{A AUXTRIG}}$ ...A auxiliary trigger
$\overline{\text{B AUXTRIG}}$ ...B auxiliary trigger
$\overline{\text{BWL}}$ ...bandwidth limit
$\overline{\text{DS}}$ ...delay select
$\overline{\text{E}}$ ...enable
$\overline{\text{HSA}}$ ...horizontal select A
$\overline{\text{HSB}}$ ...horizontal select B
$\overline{\text{MAG}}$ ...magnify
$\overline{\text{RDA}}$ ...reset delay adjust
$\overline{\text{ROA}}$ ...readout acknowledge
$\overline{\text{ROB}}$ ...readout blank
$\overline{\text{ROR}}$ ...readout request
$\overline{\text{ROS 1}}$ ...readout strobe 1
$\overline{\text{ROS 2}}$ ...readout strobe 2
$\overline{\text{SGAZ}}$ ...sweep gate A to Z axis
$\overline{\text{SGA}}$ ...sweep gate A
$\overline{\text{SGBZ}}$ ...sweep gate B to Z axis
$\overline{\text{SGB}}$ ...sweep gate B
$\overline{\text{TSA}}$ ...trigger status A
$\overline{\text{TSB}}$ ...trigger status B
$\overline{\text{VS1}}$— $\overline{\text{VS4}}$ ...vertical selects 1—4

ACRONYM DICTIONARY

A5—CONTROL BOARD
(SN B049999 & BELOW)

CIRCUIT NUMBER	SCHEM NUMBER	CIRCUIT NUMBER	SCHEM NUMBER	CIRCUIT NUMBER	SCHEM NUMBER	CIRCUIT NUMBER	SCHEM NUMBER	CIRCUIT NUMBER	SCHEM NUMBER
BT2570	1	CR2371	1	R2331	2	R2541	1	U2210	12
		CR2420	2	R2332	2	R2542	1	U2220	2
C2010	2	CR2610	2	R2333	2	R2543	1	U2220	12
C2011	12	CR2620	2	R2334	2	R2544	1	U2240	1
C2101	12	CR2621	2	R2340	2	R2545	1	U2240	12
C2110	2	CR2622	2	R2341	2	R2560	1	U2250	1
C2111	12	CR2630	2	R2342	1	R2601	2	U2250	12
C2112	12	CR2631	2	R2343	1	R2602	2	U2260	1
C2113	12	CR2640	2	R2344	1	R2603	2	U2260	12
C2160	12	CR2770	1	R2345	1	R2604	2	U2301	2
C2220	12			R2346	1	R2610	2	U2301	12
C2221	12	J251	1	R2370	1	R2611	2	U2310	1
C2230	2	J251	12	R2401	2	R2612	2	U2310	2
C2240	1	J500	1	R2402	2	R2613	2	U2350	1
C2320	12	J651	2	R2403	2	R2620	2	U2401	2
C2321	2	J652	1	R2404	2	R2621	2	U2401	12
C2322	2	J652	2	R2405	2	R2622	2	U2410	2
C2330	2	J652	12	R2406	2	R2623	2	U2410	12
C2331	12			R2407	2	R2624	2	U2420	2
C2332	2	P501	2	R2408	2	R2630	2	U2420	12
C2333	2	P503	1	R2409	2	R2631	2	U2430	2
C2340	1			R2410	2	R2632	2	U2430	12
C2350	1	Q2070	1	R2411	2	R2640	2	U2440	1
C2351	1	Q2170	1	R2412	2	R2641	2	U2440	12
C2360	1	Q2270	1	R2413	2	R2642	2	U2450	1
C2420	2	Q2320	2	R2414	2	R2643	2	U2460	1
C2421	2			R2415	2	R2644	2	U2501	2
C2422	2	R2001	2	R2416	2	R2645	2	U2501	12
C2430	2	R2002	2	R2417	2	R2660	1	U2510	2
C2431	2	R2004	2	R2420	2	R2661	1	U2510	12
C2432	2	R2005	2	R2421	2	R2701	2	U2520	2
C2450	12	R2006	2	R2422	2	R2702	2	U2520	12
C2470	1	R2007	2	R2430	2	R2703	2	U2521	2
C2501	12	R2010	2	R2431	2	R2704	2	U2521	12
C2510	12	R2011	2	R2432	2	R2705	2	U2530	2
C2511	2	R2012	2	R2433	2	R2706	2	U2530	12
C2520	12	R2013	2	R2434	2	R2707	2	U2540	1
C2521	2	R2070	1	R2440	1	R2708	2	U2540	12
C2530	12	R2101	2	R2441	1	R2709	2	U2550	1
C2550	1	R2102	2	R2442	1	R2710	2	U2550	12
C2551	1	R2103	2	R2443	1	R2711	2	U2601	2
C2552	12	R2104	2	R2444	1	R2712	2	U2601	12
C2601	12	R2110	2	R2470	1	R2720	2	U2620	2
C2610	12	R2170	1	R2471	1	R2721	2	U2620	12
C2620	12	R2171	1	R2500	1	R2730	2	U2630	2
C2621	2	R2172	1	R2501	2	R2731	2	U2630	12
C2622	2	R2201	2	R2502	2	R2732	2	U2640	1
C2630	2	R2202	2	R2503	2	R2733	2	U2640	12
C2631	2	R2203	2	R2504	2	R2734	2	U2650	1
C2632	12	R2204	2	R2505	2	R2735	2	U2650	12
C2640	1	R2205	2	R2506	2	R2740	2	U2660	1
C2650	12	R2206	2	R2510	2	R2741	2	U2660	12
C2660	12	R2220	2	R2511	2	R2742	1		
C2720	2	R2230	2	R2512	2	R2770	1	VR2420	2
C2721	2	R2231	2	R2513	2				
C2730	2	R2232	2	R2520	2	TP2070	12	W511	2
C2731	2	R2241	1	R2521	2	TP2420	2	W511	12
C2732	2	R2242	1	R2522	2	TP2421	2	W512	1
C2733	2	R2244	1	R2523	2	TP2701	12	W512	2
C2740	12	R2250	1	R2524	2			W512	12
		R2251	1	R2530	2	U2101	2	W2070	12
CR2070	1	R2301	2	R2531	2	U2101	12	W2540	1
CR2071	1	R2302	2	R2532	2	U2140	1	W2610	12
CR2170	1	R2303	2	R2533	2	U2140	12	W2701	12
CR2230	2	R2304	2	R2534	2	U2160	1		
CR2231	2	R2305	2	R2535	2	U2160	12	Y2540	1
CR2232	2	R2306	2	R2536	2	U2201	2		
CR2233	2	R2320	2	R2537	2	U2201	12		
CR2370	1	R2330	2	R2540	2	U2210	2		

A5—CONTROL BOARD
(SN B049999 & BELOW)

PROCESSOR AND DIGITAL CONTROL 1
(SN B050000 & ABOVE)

CIRCUIT NUMBER	SCHEM LOCATION	BOARD LOCATION	CIRCUIT NUMBER	SCHEM LOCATION	BOARD LOCATION	CIRCUIT NUMBER	SCHEM LOCATION	BOARD LOCATION	CIRCUIT NUMBER	SCHEM LOCATION	BOARD LOCATION
ASSEMBLY A5											
C2241	3C	2F	R2244	3D	3F	TP2	3B	3F	U2450	6C	4E
C2350	3C	2F	R2251	2E	3D	TP3	1B	4B	U2450	6E	4E
C2360	6D	2E	R2320	5L	2D	TP4	2G	2F	U2460	7L	2E
C2465	6F	4F	R2342	2E	2D	TP5	2H	4E	U2540A	8M	3F
			R2343	3E	3E	TP6	2H	2G	U2540B	6G	3F
J251	2A	1D	R2344	3E	3E	TP7	9H	4E	U2540C	2K	3F
J503	5C	2F	R2345	3C	3F	TP8	6G	3E	U2540D	2H	3F
J512	1N	4H	R2415	8F	4E				U2540E	3B	3F
J512	4N	4H	R2440	3D	3E	U2140	2E	3D	U2540F	1L	3F
J652	3N	2A	R2441	3D	3E	U2180	6L	3F	U2550	3J	4F
J4241	1N	1E	R2442	3D	4E	U2240	3C	3F	U2560A	2L	4F
J4241	6N	1E	R2443	3D	3E	U2250	4E	4E	U2560B	2L	4F
J4330	3N	2D	R2444	6C	2E	U2260	7J	3G	U2570A	3L	4G
J4330	5N	2D	R2461	9K	4E	U2350	8E	4F	U2570B	8B	4G
			R2465	6F	4F	U2360	6J	2G	U2640	2J	4G
R2213	2M	4F	R2540	3C	3F	U2405	2G	2F	U2650	4L	3G
R2214	2M	3C	R2560	2H	4F	U2415	8G	4E	U2660	4L	3G
R2215	3M	3C	R2649	1M	4H	U2425	6G	3E			
R2241	3E	3E				U2440A	2D	3E	Y2540	1C	2D
R2242	3E	3E	TP1	8G	3E	U2440B	5D	3E			

Patrial A5 also shown on diagrams 2, 7, and 12.

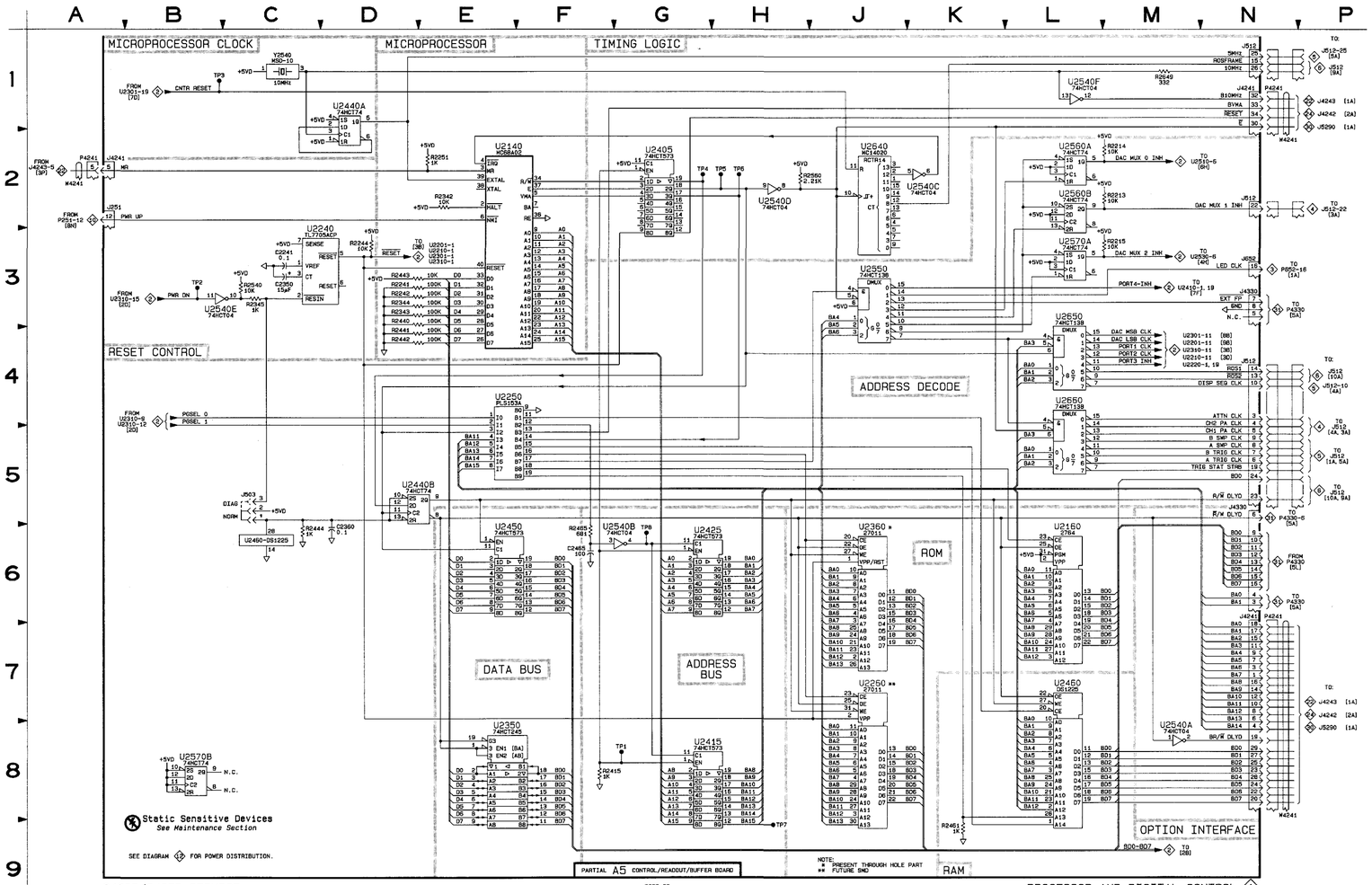

TEST WAVEFORM SETUP INFORMATION

The waveform below was obtained at the test point indicated on the accompanying schematic diagram. The waveform is representative of the signal that may be expected at the test point whenever the instrument is running.

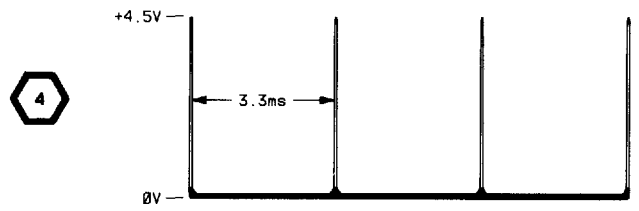

3831-51

ANALOG CONTROL WAVEFORMS

PROCESSOR AND DIGITAL CONTROL (1)
(SN B049999 & BELOW)

CIRCUIT NUMBER	SCHEM LOCATION	BOARD LOCATION	CIRCUIT NUMBER	SCHEM LOCATION	BOARD LOCATION	CIRCUIT NUMBER	SCHEM LOCATION	BOARD LOCATION	CIRCUIT NUMBER	SCHEM LOCATION	BOARD LOCATION
ASSEMBLY A5											
BT2570	8M	4K	P503	4C	2G	R2443	7D	2G	U2440A	2D	2G
						R2444	2C	2G	U2440B	3G	2G
C2240	4C	2G	Q2070	7F	1L	R2470	8G	2K	U2450	5C	2G
C2340	7C	2F	Q2170	7G	2L	R2471	9G	2L	U2450	7E	2G
C2350	3C	2G	Q2270	7G	2L	R2500	1N	3J	U2460	8L	3J
C2351	7C	2H				R2541	2B	3F	U2540A	2B	3G
C2360	8L	2J	R2070	8F	1L	R2542	2B	3G	U2540B	2C	3G
C2470	8M	3K	R2170	7F	1K	R2543	2B	3G	U2540C	10D	3G
C2550	1B	3H	R2171	7G	1L	R2544	2C	3G	U2540D	10D	3G
C2551	1B	3H	R2172	7F	1L	R2545	1B	3G	U2540E	2H	3G
C2640	2B	3G	R2241	8D	2F	R2560	3H	3J	U2540F	4G	3G
			R2242	8D	2F	R2660	2M	4J	U2550	4K	3H
CR2070	8F	1K	R2244	3D	2G	R2661	3M	4J	U2640	2J	4G
CR2071	7F	1K	R2250	1D	2G	R2742	3M	4G	U2650C	4B	4H
CR2170	8F	2K	R2251	3D	2G	R2770	8M	4L	U2650	2M	4H
CR2370	8M	2K	R2342	3D	2F				U2660	3L	4J
CR2371	8M	2K	R2343	6D	2G	U2140	2E	1F			
CR2770	8M	4K	R2344	8D	2G	U2160	6J	1J	W512	10P	4G
			R2345	4C	2G	U2240	3C	2G	W512	5P	4G
J251	3A	1D	R2346	4C	2G	U2250	4G	2G	W2540	3K	3H
J500	1N	1E	R2370	8F	2K	U2260	8J	2J			
J500	5N	1E	R2440	8D	2F	U2310	6C	2B	Y2540	1B	3G
J652	1N	1A	R2441	8D	2G	U2350	5C	2G			
			R2442	8D	2G	U2350	9E	2G			
Patrial A5 also shown on diagrams 2 and 12.											
OTHER PARTS											
P512	1P	CHASSIS	P512	9P	CHASSIS						

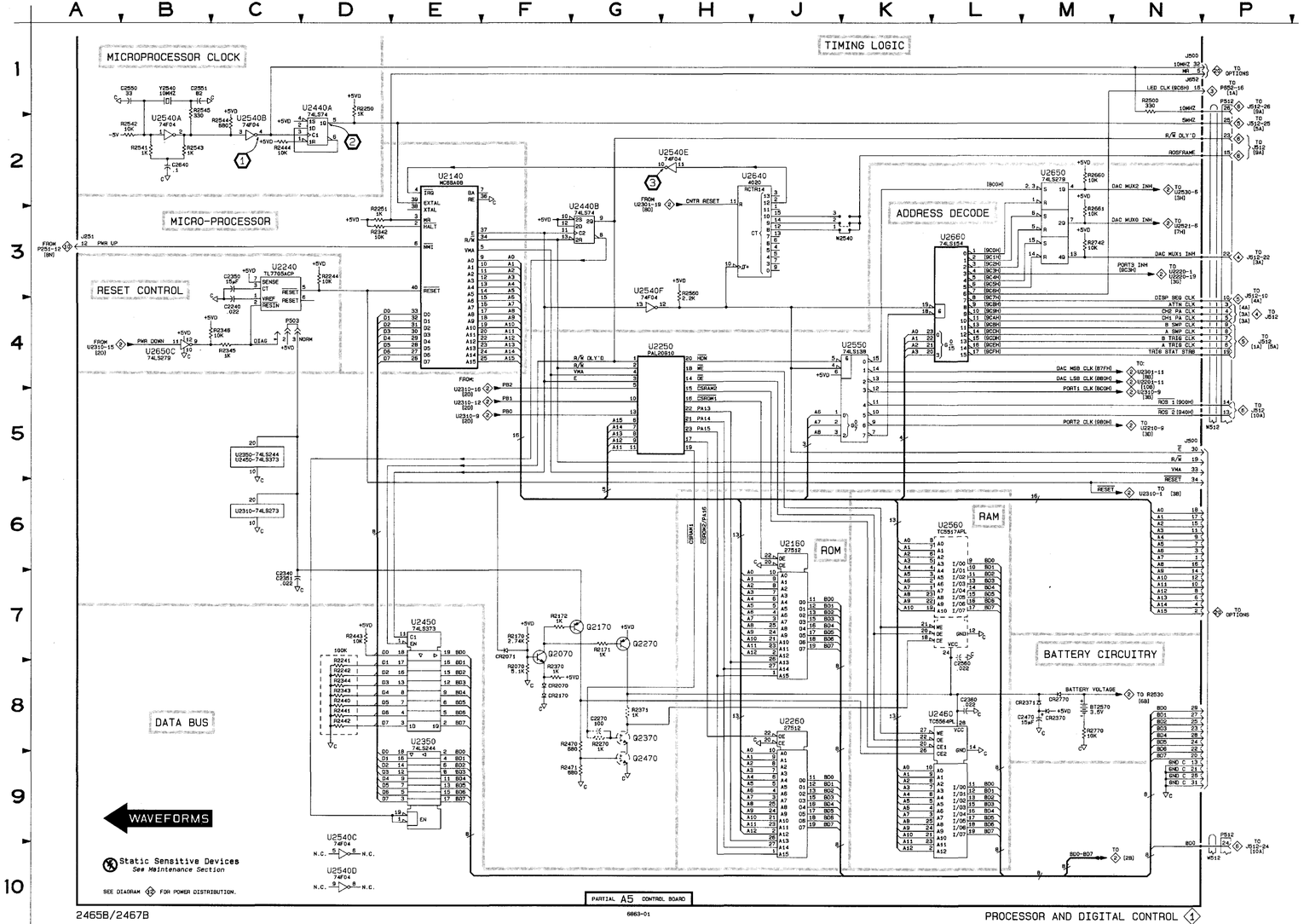

2465B/2467B

PROCESSOR AND DIGITAL CONTROL (1)

PROCESSOR AND DIGITAL CONTROL (SN B049999 & BELOW)

(1)

ANALOG CONTROL 2

(SN B050000 & ABOVE)

CIRCUIT NUMBER	SCHEM LOCATION	BOARD LOCATION	CIRCUIT NUMBER	SCHEM LOCATION	BOARD LOCATION	CIRCUIT NUMBER	SCHEM LOCATION	BOARD LOCATION	CIRCUIT NUMBER	SCHEM LOCATION	BOARD LOCATION
ASSEMBLY A5											
C2010	9F	1C	J651	3A	3A	R2406	4D	3A	R2645	8K	4H
C2110	9G	1C	J651	4R	3A	R2407	3E	3A	R2646	8J	4H
C2220	6N	2D	J651	5A	3A	R2408	4E	4A	R2647	8K	4H
C2321	5K	2D	J652	2G	2A	R2409	4E	3A	R2648	8K	4H
C2322	5L	2D	J652	6A	2A	R2410	4D	3A	R2701	6E	4J
C2323	5L	2D	J652	9R	2A	R2411	3E	3A	R2702	6E	4J
C2324	3P	2E	J4241	4R	1E	R2412	4C	3A	R2703	5C	4A
C2325	6P	2E				R2413	6C	1B	R2704	5E	4A
C2330	6K	3C	Q2320	4N	2C	R2414	7E	1A	R2705	5D	4A
C2332	2K	2B				R2416	6E	1A	R2706	5E	4A
C2333	2K	2C	R2001	9P	2A	R2417	6E	1A	R2707	5D	4B
C2420	5N	2B	R2002	9P	2A	R2420	6N	3D	R2708	5E	4B
C2421	6K	3C	R2004	9P	2A	R2421	4N	2C	R2709	5E	4B
C2422	4N	2C	R2005	9P	2A	R2422	4N	2C	R2710	5C	4B
C2425	6N	3D	R2006	9P	2A	R2423	4N	2C	R2711	4E	4A
C2430	6K	3C	R2007	9P	2A	R2424	4N	2C	R2712	4E	4A
C2431	1K	2B	R2010	10F	1C	R2430	6L	2C	R2720	8P	4C
C2432	1K	2C	R2011	9F	2C	R2431	1N	3C	R2721	8L	3C
C2433	1L	2B	R2012	10F	1C	R2432	6M	2C	R2730	7L	3C
C2434	1L	2C	R2013	9F	2C	R2433	1M	2B	R2731	3L	3C
C2511	3H	4B	R2014	9F	1C	R2434	1N	2C	R2732	3L	3B
C2521	6M	2C	R2015	9F	2C	R2435	6M	2C	R2733	3M	3C
C2621	7K	3C	R2016	9F	1C	R2501	6E	3A	R2734	3M	3C
C2622	7K	4D	R2101	10P	1A	R2502	5E	4A	R2735	3N	3B
C2623	7L	4D	R2102	10P	1A	R2503	5E	4A	R2740	3L	3C
C2630	4K	3C	R2103	10P	2A	R2504	6E	3A	R2741	4M	4C
C2631	3K	3B	R2104	10P	2A	R2505	6E	3A			
C2632	3L	3B	R2201	6C	2A	R2511	3G	4B	TP9	6G	4B
C2633	3N	4B	R2202	6D	2A	R2512	3H	4J			
C2634	7M	3C	R2203	6D	1A	R2513	4G	3B	U2101	8G	2B
C2720	8K	3C	R2204	6D	2A	R2520	5L	2B	U2201	8C	1B
C2721	8L	3D	R2205	6E	3A	R2521	5L	2B	U2210	2E	2B
C2722	8L	3D	R2210	2F	3A	R2522	7M	3C	U2220	1J	3H
C2730	7L	3C	R2211	2F	3A	R2523	7M	3C	U2301	7C	2B
C2731	7K	3C	R2212	2F	3A	R2524	7N	4C	U2310	2C	3B
C2732	3K	3C	R2220	5M	2C	R2531	1M	3B	U2401	3G	3B
C2733	3K	3B	R2230	6N	2D	R2532	4M	4C	U2410	6G	1B
C2734	7L	3C	R2231	2N	2B	R2533	3N	4B	U2420A	4N	2C
			R2232	2M	2C	R2534	1N	2C	U2420B	6M	2C
CR2230	2P	3B	R2301	7E	2A	R2535	1L	2B	U2420C	5N	2C
CR2332	2M	3C	R2302	7E	2A	R2536	1C	4J	U2420D	5M	2C
CR2420	4N	2C	R2303	7E	1A	R2537	2N	4B	U2430A	1M	2C
CR2421	5M	3D	R2304	6E	2A	R2601	4P	4A	U2430B	2N	2C
CR2422	4M	3D	R2305	6E	3A	R2602	4E	4A	U2430C	2M	2C
CR2423	4M	3D	R2321	4K	3D	R2603	4E	4A	U2430D	1N	2C
CR2610A	2P	4C	R2322	4K	3D	R2611	3G	4B	U2501	5G	4B
CR2610B	3P	4C	R2323	4K	3D	R2612	7M	4C	U2510	3H	4B
CR2620	7M	4C	R2329	6N	2D	R2613	8M	4C	U2520A	7M	3D
CR2621	8N	4D	R2330	6N	2C	R2620	7P	4D	U2520B	6N	3D
CR2640	3M	4C	R2331	2N	2B	R2621	7M	4C	U2521	5J	3C
			R2332	2N	2B	R2622	7M	3D	U2530	3J	3C
J501	6E	1A	R2333	2M	2C	R2623	8N	3D	U2601	4G	4B
J504	5K	2C	R2334	2L	2C	R2624	8P	4D	U2620A	7M	4C
J511	1R	4C	R2340	1B	4J	R2625	3P	4D	U2620B	9M	4C
J511	4A	4C	R2341	1C	4J	R2626	6P	4D	U2620C	7N	4C
J511	5R	4C	R2346	4M	3D	R2630	3N	3B	U2620D	8N	4C
J512	1A	4H	R2401	3E	3A	R2631	3N	3B	U2630A	3N	4C
J512	2H	4H	R2402	3E	3A	R2632	3N	3B	U2630B	2N	4C
J512	3R	4H	R2403	3E	3A	R2640	4L	4C	U2630C	4M	4C
J512	6A	4H	R2404	3E	3A	R2643	8K	4H	U2630D	3M	4C
J512	8R	4H	R2405	4C	3A	R2644	8K	4H			
Partial A5 also shown on diagrams 1, 7, and 12.											
OTHER PARTS											
P501	6F	CHASSIS									

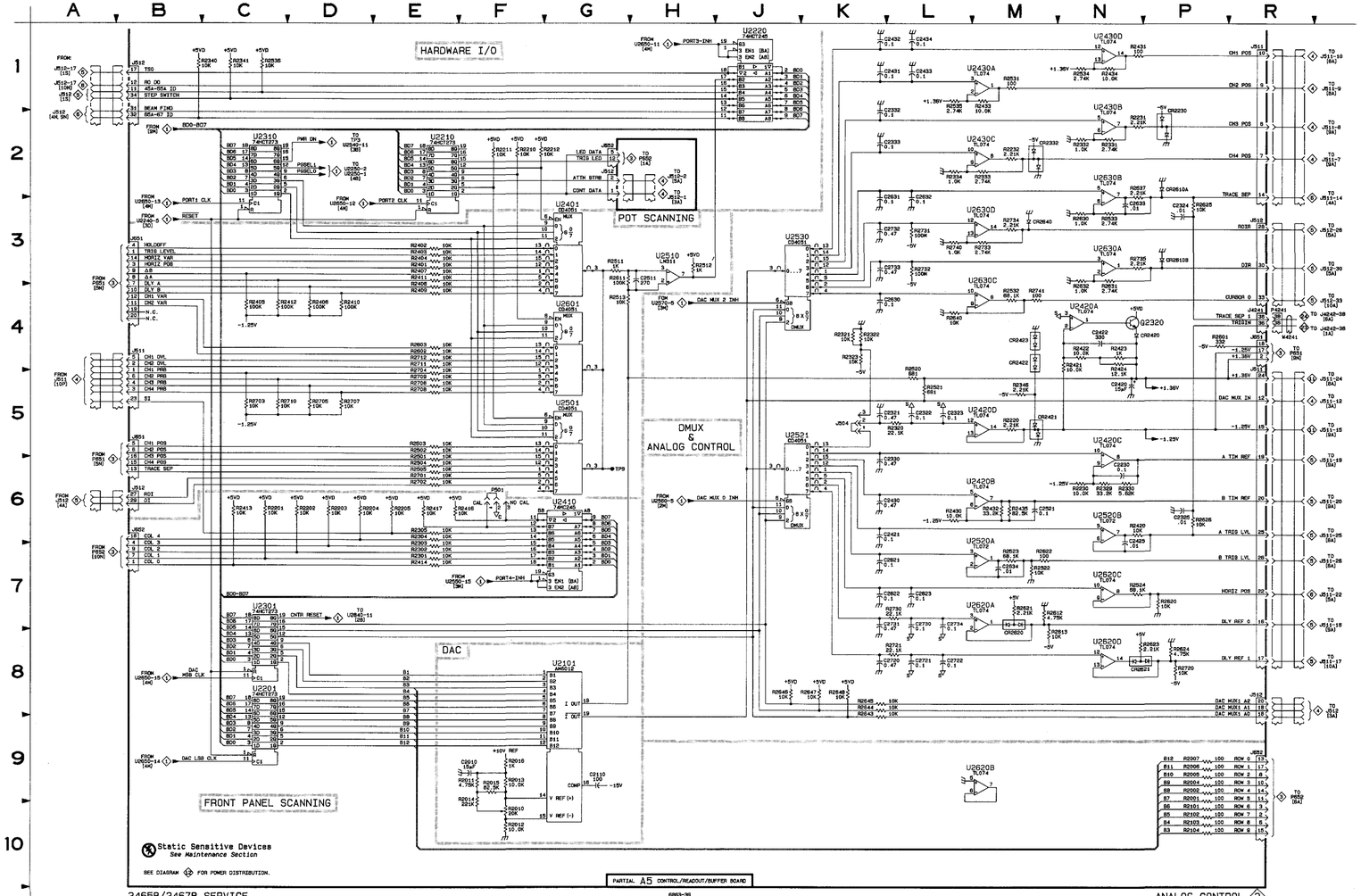

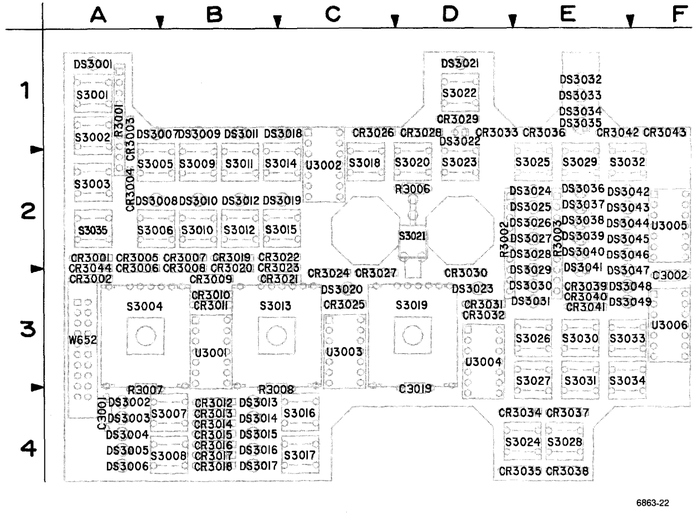

Figure 10-6. A6A1—Front Panel board.

A6A1—FRONT PANEL BOARD

CIRCUIT NUMBER	SCHEM NUMBER	CIRCUIT NUMBER	SCHEM NUMBER	CIRCUIT NUMBER	SCHEM NUMBER	CIRCUIT NUMBER	SCHEM NUMBER
C3001	12	CR3037	3	DS3032	3	S3015	3
C3002	12	CR3038	3	DS3033	3	S3016	3
C3019	12	CR3039	3	DS3034	3	S3017	3
		CR3040	3	DS3035	3	S3018	3
CR3001	3	CR3041	3	DS3036	3	S3019	3
CR3002	3	CR3042	3	DS3037	3	S3020	3
CR3003	3	CR3043	3	DS3038	3	S3021	3
CR3004	3	CR3044	3	DS3039	3	S3022	3
CR3005	3			DS3040	3	S3023	3
CR3006	3	DS3001	3	DS3041	3	S3024	3
CR3007	3	DS3002	3	DS3042	3	S3025	3
CR3008	3	DS3003	3	DS3043	3	S3026	3
CR3009	3	DS3004	3	DS3044	3	S3027	3
CR3010	3	DS3005	3	DS3045	3	S3028	3
CR3011	3	DS3006	3	DS3046	3	S3029	3
CR3012	3	DS3007	3	DS3047	3	S3030	3
CR3013	3	DS3008	3	DS3048	3	S3031	3
CR3014	3	DS3009	3	DS3049	3	S3032	3
CR3015	3	DS3010	3			S3033	3
CR3016	3	DS3011	3	R3001	3	S3034	3
CR3017	3	DS3012	3	R3002	3	S3035	3
CR3018	3	DS3013	3	R3003	3		
CR3019	3	DS3014	3	R3006	3	U3001	3
CR3020	3	DS3015	3	R3007	3	U3001	12
CR3021	3	DS3016	3	R3008	3	U3002	3
CR3022	3	DS3017	3			U3002	12
CR3023	3	DS3018	3	S3001	3	U3003	3
CR3024	3	DS3019	3	S3002	3	U3003	12
CR3025	3	DS3020	3	S3003	3	U3004	3
CR3026	3	DS3021	3	S3004	3	U3004	12
CR3027	3	DS3022	3	S3005	3	U3005	3
CR3028	3	DS3023	3	S3006	3	U3005	12
CR3029	3	DS3024	3	S3007	3	U3006	3
CR3030	3	DS3025	3	S3008	3	U3006	12
CR3031	3	DS3026	3	S3009	3		
CR3032	3	DS3027	3	S3010	3	W652	3
CR3033	3	DS3028	3	S3011	3	W652	12
CR3034	3	DS3029	3	S3012	3		
CR3035	3	DS3030	3	S3013	3		
CR3036	3	DS3031	3	S3014	3		

Static Sensitive Devices
See Maintenance Section

COMPONENT NUMBER EXAMPLE

Component Number

A23 A2 R1234

Assembly Number — Subassembly Number (if used) — Schematic Circuit Number

Chassis-mounted components have no Assembly Number prefix—see end of Replaceable Electrical Parts List.

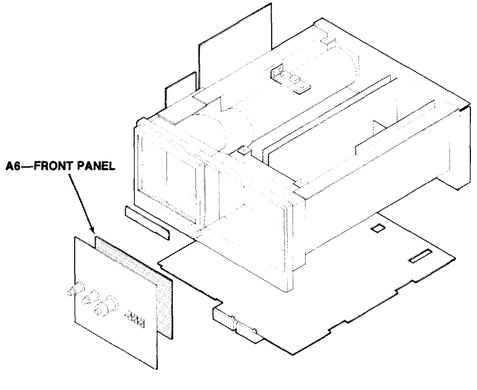

ANALOG CONTROL 2
(SN B049999 & BELOW)

CIRCUIT NUMBER	SCHEM LOCATION	BOARD LOCATION	CIRCUIT NUMBER	SCHEM LOCATION	BOARD LOCATION	CIRCUIT NUMBER	SCHEM LOCATION	BOARD LOCATION	CIRCUIT NUMBER	SCHEM LOCATION	BOARD LOCATION
ASSEMBLY A5											
C2010	10E	1C	R2011	10E	1B	R2502	6D	3A	R2720	8N	4D
C2110	10F	1C	R2012	10E	1C	R2503	6D	3A	R2721	8J	4D
C2230	6M	2E	R2013	10E	1C	R2504	6D	3A	R2730	7J	4E
C2321	6J	2D	R2101	10N	1A	R2505	6D	3B	R2731	4J	4E
C2322	5J	2D	R2102	10N	1A	R2506	6D	3B	R2732	4L	4F
C2330	6J	2E	R2103	9N	1A	R2510	2F	3B	R2733	4K	4F
C2332	2J	2E	R2104	9N	1B	R2511	3F	3C	R2734	3L	4F
C2333	3J	2F	R2110	3E	1C	R2512	3G	3C	R2735	4M	4F
C2420	5M	3C	R2201	7C	2A	R2513	3F	3C	R2740	4K	4F
C2421	6J	3D	R2202	7C	2A	R2520	5J	3C	R2741	4M	4G
C2422	5L	2D	R2203	7D	2A	R2521	5K	3C			
C2430	6J	3E	R2204	7D	2A	R2522	7L	3C	TP2420	5M	3D
C2431	2J	3E	R2205	7D	2B	R2523	7K	3D	TP2421	5M	3D
C2432	2J	3F	R2206	10C	2B	R2524	7M	3D			
C2511	3G	3C	R2220	5L	2D	R2530	6C	3E	U2101	9F	1A
C2521	6L	3E	R2230	6L	2E	R2531	2M	3E	U2201	9C	2A
C2621	7J	3D	R2231	2M	2E	R2532	4K	3E	U2210	2E	2B
C2622	7J	3D	R2232	3K	2F	R2533	3M	3F	U2220	2H	2C
C2630	4J	3E	R2301	7D	2A	R2534	2L	3F	U2301	8C	2A
C2631	3J	3F	R2302	7D	2A	R2535	2K	3F	U2310	2C	2B
C2720	8J	4D	R2303	7D	2A	R2536	1D	3F	U2401	3F	2A
C2721	8K	4D	R2304	7D	2A	R2537	3M	3F	U2410	7F	2B
C2730	7K	4E	R2305	7D	2B	R2537	3M	3F	U2420A	4L	2D
C2731	7J	4E	R2306	9C	2B	R2540	8G	3F	U2420B	6K	2D
C2732	3J	4E	R2320	5J	2D	R2601	4N	4A	U2420C	6M	2D
C2733	4J	4F	R2330	6M	2E	R2602	4D	4A	U2420D	5K	2D
			R2331	3M	2E	R2603	4D	4B	U2430A	2K	2E
CR2230	2M	2E	R2332	3L	2E	R2604	8D	3B	U2430B	2M	2E
CR2231	3N	2E	R2333	3K	2F	R2610	2F	3B	U2430C	3K	2E
CR2232	3L	2F	R2334	3K	2F	R2611	3G	3C	U2430D	2M	2E
CR2233	3L	2F	R2340	1C	2F	R2612	7N	4C	U2501	5F	3A
CR2420	5M	3D	R2341	1C	2F	R2613	8N	4C	U2510	3G	3C
CR2610	3N	4C	R2401	3D	2A	R2620	7M	4C	U2520A	7K	3D
CR2620	7L	4D	R2402	3D	2A	R2621	7L	4C	U2520B	6M	3D
CR2621	8M	4D	R2403	3D	2A	R2622	7M	4D	U2521	6J	3D
CR2622	8M	4D	R2404	3D	2A	R2623	8M	4D	U2530	3J	3E
CR2630	7K	4E	R2405	4C	2B	R2624	8M	4D	U2601	4F	4A
CR2631	4N	4F	R2406	4D	2B	R2630	3L	4E	U2620A	8M	4D
CR2640	3N	4F	R2407	3D	3A	R2631	4M	4F	U2620B	7K	4D
			R2408	4D	3A	R2632	4L	4F	U2620C	6C	4D
J651	3A	3A	R2409	4D	3B	R2640	4K	4F	U2620D	7M	4D
J651	4N	3A	R2410	4D	3B	R2641	8G	4F	U2630A	3K	4E
J651	6A	3A	R2411	4D	3B	R2642	8H	4G	U2630B	4M	4E
J652	1N	1A	R2412	4C	3B	R2643	8J	4G	U2630C	3M	4E
J652	7A	1A	R2413	7C	2C	R2644	8J	4G	U2630D	4K	4E
J652	9N	1A	R2414	8D	2C	R2645	8J	4G			
			R2415	2F	3C	R2701	6D	4A	VR2420	5L	3D
P501	7E	3C	R2416	7E	3C	R2702	6D	4A			
			R2417	7E	3C	R2703	5C	4B	W511	2N	4C
Q2320	4M	2D	R2420	6M	3D	R2704	5D	4B	W511	5A	4C
			R2421	5L	2D	R2705	5D	4B	W511	5N	4C
R2001	10N	1B	R2422	5L	3D	R2706	5D	4B	W512	1N	4G
R2002	10N	1B	R2430	6K	2E	R2707	5D	4B	W512	2A	4G
R2004	10N	1B	R2431	2M	2E	R2708	5D	4B	W512	4N	4G
R2005	10N	1B	R2432	6K	3E	R2709	5D	4B	W512	6A	4G
R2006	10N	1B	R2433	2K	3E	R2710	5C	4B	W512	8N	4G
R2007	10N	1B	R2434	2M	3F	R2711	5D	4B			
R2010	10E	1B	R2501	6D	3A	R2712	5D	4B			
Patrial A5 also shown on diagrams 1 and 12.											
OTHER PARTS											
P511	2N	CHASSIS	P511	5N	CHASSIS	P512	1N	CHASSIS	P512	8A	CHASSIS
P511	4A	CHASSIS	P512	1A	CHASSIS	P512	3N	CHASSIS	P512	8N	CHASSIS

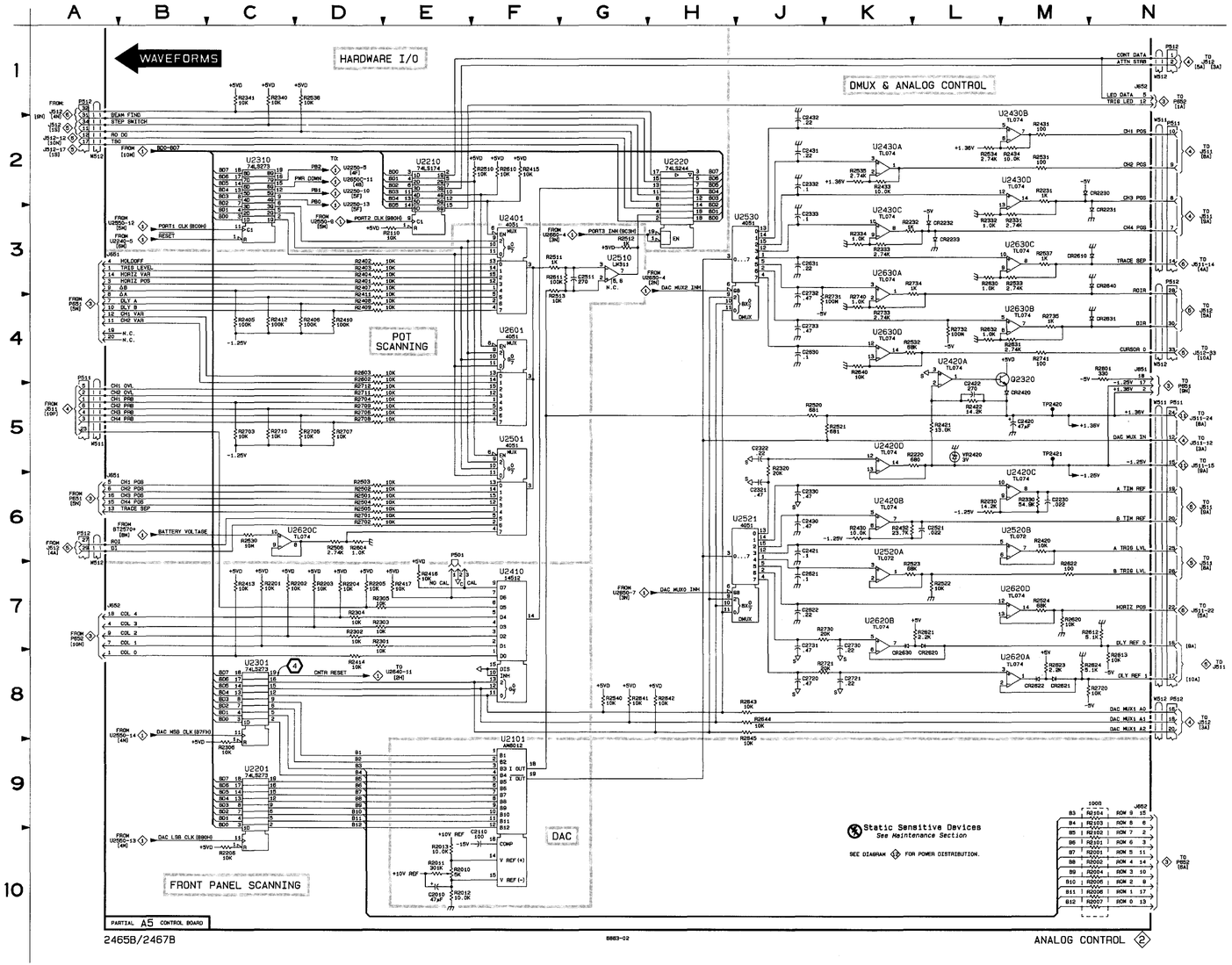

FRONT PANEL CONTROLS 3

CIRCUIT NUMBER	SCHEM LOCATION	BOARD LOCATION	CIRCUIT NUMBER	SCHEM LOCATION	BOARD LOCATION	CIRCUIT NUMBER	SCHEM LOCATION	BOARD LOCATION	CIRCUIT NUMBER	SCHEM LOCATION	BOARD LOCATION
ASSEMBLY A6											
C3001	10N	4A	CR3042	9D	1E	DS3042	8H	2E	S3010	3D	2B
C3002	10N	3F	CR3043	3D	1F	DS3043	8H	2E	S3011	6C	2B
C3019	10N	4D	CR3044	2D	3A	DS3044	8J	2E	S3012	7C	2B
						DS3045	8K	2E	S3013	4C	3B
CR3001	7D	2A	DS3001	2L	1A	DS3046	8K	2E	S3014	6D	2B
CR3002	8D	3A	DS3002	5G	4A	DS3047	4J	3E	S3015	7D	2B
CR3003	8D	2A	DS3003	5G	4A	DS3048	4K	3E	S3016	2D	4C
CR3004	8D	2A	DS3004	5H	4A	DS3049	4K	3E	S3017	2C	4C
CR3005	4D	2A	DS3005	5H	4A				S3018	8C	2C
CR3006	4D	3A	DS3006	5J	4A	R3001	1H	1A	S3019	5C	3C
CR3007	4D	2B	DS3007	2G	1A	R3001	2G	1A	S3020	8C	2D
CR3008	4D	3B	DS3008	2H	2A	R3001	2H	1A	S3021	5D	2D
CR3009	5D	3B	DS3009	2G	1B	R3001	2J	1A	S3022	8B	1D
CR3010	5D	3B	DS3010	2K	2B	R3001	2L	1A	S3023	8B	2D
CR3011	5D	3B	DS3011	2H	1B	R3001	3H	1A	S3024	2B	4D
CR3012	5D	4B	DS3012	2K	2B	R3001	5G	1A	S3025	10D	2E
CR3013	8D	4B	DS3013	5K	4B	R3002	1H	2D	S3026	10C	3E
CR3014	4D	4B	DS3014	5K	4B	R3002	3G	2D	S3027	10C	3E
CR3015	3D	4B	DS3015	5L	4B	R3002	3L	2D	S3028	2B	4E
CR3016	3D	4B	DS3016	7G	4B	R3002	5J	2D	S3029	8D	2E
CR3017	2D	4B	DS3017	7G	4B	R3002	6G	2D	S3030	10B	3E
CR3018	2D	4B	DS3018	2J	1B	R3002	6H	2D	S3031	10B	3E
CR3019	7D	2B	DS3019	4G	2B	R3002	8H	2D	S3032	2C	2E
CR3020	7D	3B	DS3020	4H	3C	R3002	9G	2D	S3033	1B	3E
CR3021	8D	3B	DS3021	4L	1D	R3003	1G	2E	S3034	1B	3E
CR3022	7D	2B	DS3022	4G	1D	R3003	1J	2E	S3035	1D	2A
CR3023	7D	3B	DS3023	4H	3D	R3003	1K	2E			
CR3024	5D	3C	DS3024	7L	2E	R3003	1L	2E	U3001	10M	3B
CR3025	5D	3C	DS3025	7K	2E	R3003	6H	2E	U3001	5F	3B
CR3026	9D	1C	DS3026	7K	2E	R3003	9G	2E	U3002	10M	2C
CR3027	6D	3C	DS3027	7J	2E	R3003	9H	2E	U3002	2F	2C
CR3028	9D	1D	DS3028	10K	2E	R3003	9J	2E	U3003	10M	3C
CR3029	9D	1D	DS3029	8G	3E	R3006	3H	2D	U3003	4F	3C
CR3030	6D	3D	DS3030	8G	3E	R3007	2K	4A	U3004	10M	3D
CR3031	6D	3D	DS3031	10L	3E	R3008	2K	4B	U3004	7F	3D
CR3032	10D	3D	DS3032	1F	1E				U3005	10M	2F
CR3033	9D	1D	DS3033	7H	1E	S3001	7B	1A	U3005	8F	2F
CR3034	10D	4D	DS3034	8L	1E	S3002	7B	1A	U3006	10F	3F
CR3035	3D	4D	DS3035	7H	1E	S3003	7C	2A	U3006	10M	3F
CR3036	10D	1E	DS3036	10G	2E	S3004	3C	3A			
CR3037	10D	4E	DS3037	10G	2E	S3005	6B	2A	W652	10A	3A
CR3038	3D	4E	DS3038	10H	2E	S3006	6C	2A	W652	10N	3A
CR3039	2D	3E	DS3039	10H	2E	S3007	1C	4A			
CR3040	10D	3E	DS3040	10J	2E	S3008	1C	4A			
CR3041	2D	3E	DS3041	10K	3E	S3009	6B	2B			
OTHER PARTS											
P651	1N	CHASSIS	R3008	2M	CHASSIS	R3013	8M	CHASSIS	R3018	6M	CHASSIS
P652	10N	CHASSIS	R3009	4M	CHASSIS	R3014	2M	CHASSIS	R3019	4M	CHASSIS
P652	1A	CHASSIS	R3010	7M	CHASSIS	R3015	1M	CHASSIS			
			R3011	6M	CHASSIS	R3016	7M	CHASSIS	W651	9N	CHASSIS
R3007	5M	CHASSIS	R3012	5M	CHASSIS	R3017	3M	CHASSIS			

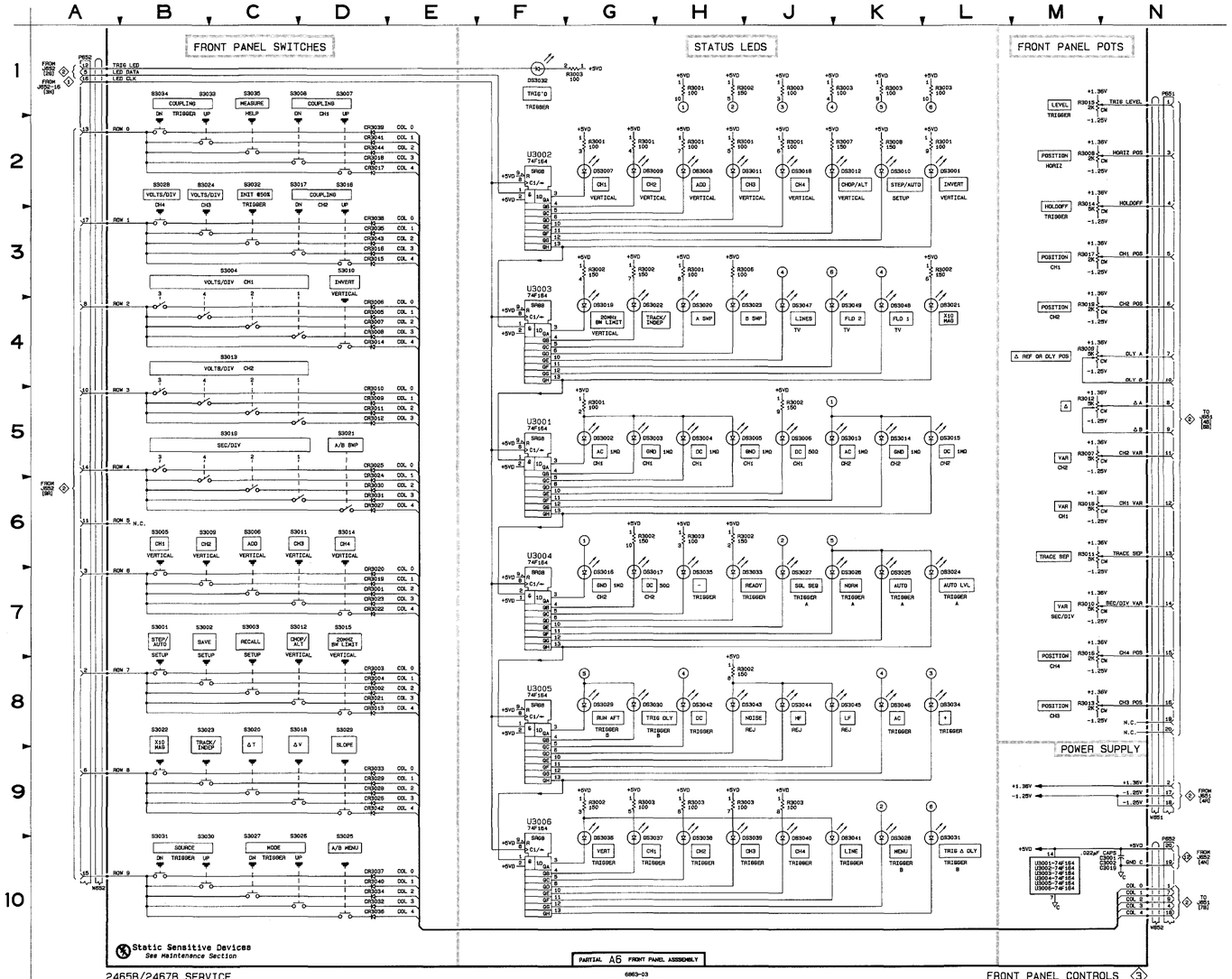

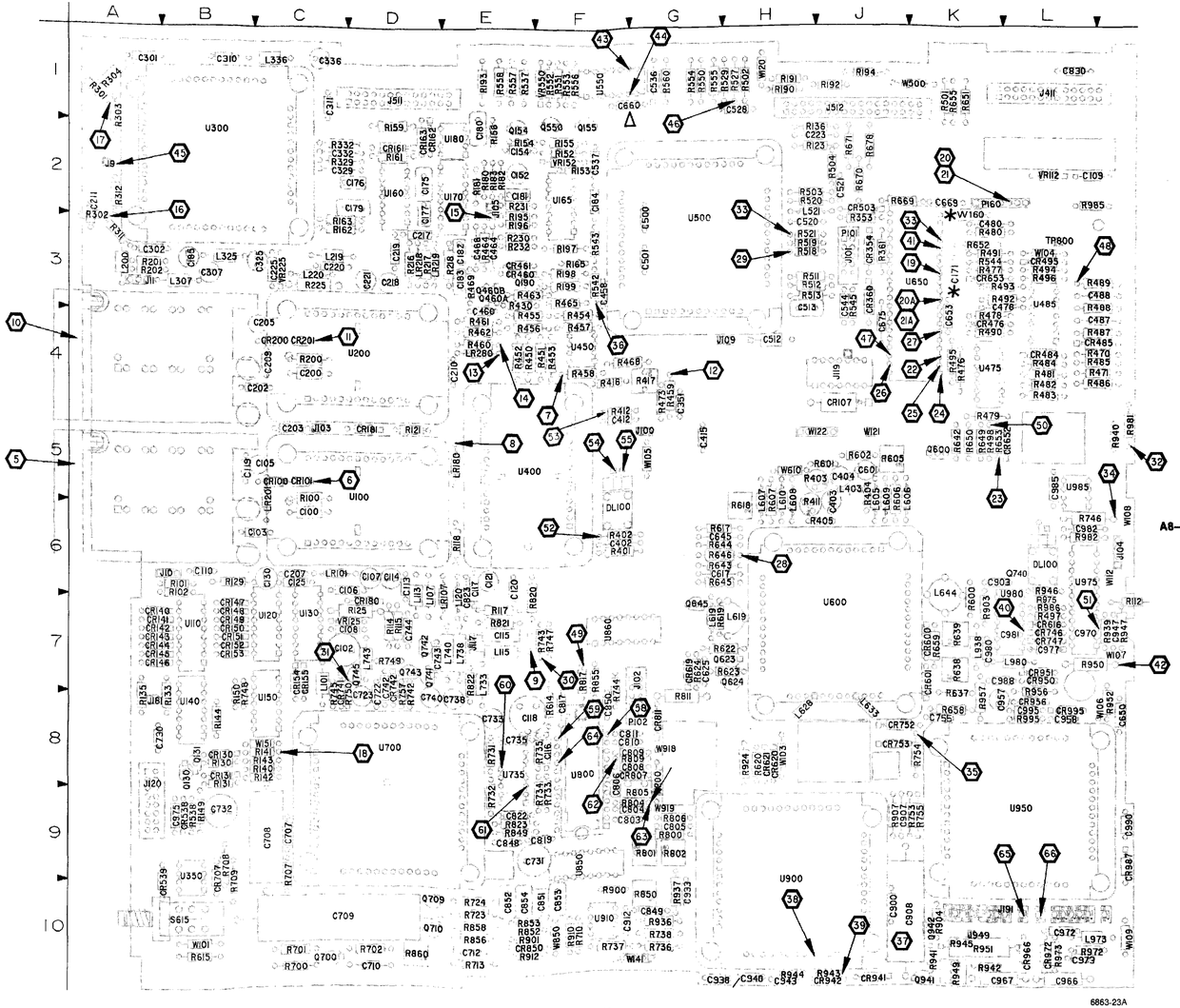

Figure 10-7. A1—Main board and A8—Scale Illumination boards.

A1—MAIN BOARD

CIRCUIT NUMBER	SCHEM NUMBER	CIRCUIT NUMBER	SCHEM NUMBER	CIRCUIT NUMBER	SCHEM NUMBER	CIRCUIT NUMBER	SCHEM NUMBER	CIRCUIT NUMBER	SCHEM NUMBER	CIRCUIT NUMBER	SCHEM NUMBER
C100	4	C544	5	CR141	4	J120	8	Q743	5	R416	6
C102	11	C601	6	CR142	4	J181	4	Q745	5	R417	6
C103	4	C617	6	CR143	4	J191	5	Q941	5	R430	4
C105	4	C625	6	CR144	4	J191	6	Q942	5	R450	4
C106	11	C645	5	CR145	4	J191	8			R451	4
C107	11	C650	5	CR146	4	J191	11	R100	4	R452	4
C108	11	C653	5	CR147	4	J411	5	R101	4	R453	4
C109	5	C669	5	CR148	4	J411	6	R102	4	R454	4
C110	4	C675	11	CR149	4	J411	11	R112	5	R455	4
C113	11	C707	5	CR150	4	J511	4	R114	4	R456	4
C114	11	C708	5	CR151	4	J511	5	R115	4	R457	4
C115	4	C709	5	CR152	4	J511	6	R117	4	R458	4
C116	4	C710	11	CR153	4	J511	11	R118	4	R459	4
C117	4	C712	5	CR154	4	J512	4	R121	4	R460	4
C118	4	C722	11	CR155	4	J512	5	R123	4	R461	4
C119	11	C723	11	CR161	4	J512	6	R125	11	R462	4
C120	11	C730	11	CR162	4	J512	11	R129	4	R463	4
C121	11	C731	11	CR163	4	J949	6	R130	4	R464	4
C125	11	C732	11	CR190	4			R131	4	R465	4
C130	4	C733	11	CR181	4	L101	11	R133	4	R468	4
C152	5	C735	6	CR200	4	L107	11	R135	4	R469	4
C154	5	C738	11	CR201	4	L113	11	R136	4	R470	6
*C171	5	C740	11	CR354	5	L115	4	R140	4	R471	6
C175	4	C742	5	CR360	5	L120	11	R141	4	R473	4
C176	4	C743	5	CR460	4	L200	4	R142	4	R476	6
C177	4	C744	5	CR461	4	L219	11	R143	4	R477	6
C179	4	C755	5	CR476	6	L220	11	R144	4	R478	6
C180	5	C803	6	CR484	6	L307	11	R149	4	R479	6
C181	5	C804	6	CR485	6	L325	11	R150	5	R480	6
C182	4	C805	6	CR495	6	L336	11	R152	5	R481	6
C183	4	C806	6	CR503	5	L403	6	R153	5	R482	6
C184	4	C808	6	CR538	5	L521	11	R154	5	R483	6
C185	4	C809	6	CR539	5	L605	6	R155	5	R484	6
C200	4	C810	11	CR600	6	L606	6	R156	5	R485	6
C202	4	C811	11	CR601	6	L607	6	R159	4	R486	6
C203	4	C817	6	CR616	6	L608	6	R161	4	R487	6
C205	4	C819	11	CR619	6	L609	6	R162	4	R488	6
C207	11	C822	6	CR620	6	L610	6	R163	4	R489	6
C209	11	C823	6	CR621	6	L619	6	R165	5	R490	6
C210	11	C830	5	CR652	5	L628	6	R180	4	R491	6
C211	4	C848	5	CR653	5	L633	6	R181	4	R492	6
C217	4	C849	5	CR707	5	L644	6	R182	4	R493	6
C218	11	C850	11	CR741	5	L733	11	R183	4	R494	6
C219	11	C851	5	CR742	5	L738	11	R190	4	R495	6
C220	11	C852	5	CR746	5	L740	11	R191	4	R496	6
C221	11	C853	5	CR747	5	L743	11	R192	4	R497	6
C223	4	C854	5	CR752	5	L938	11	R193	4	R498	6
C225	11	C900	5	CR753	5	L973	11	R194	4	R501	6
C301	4	C903	11	CR807	11	L980	11	R195	4	R502	4
C302	4	C907	5	CR811	11			R196	4	R503	5
C307	11	C908	5	CR850	5	LR101	11	R197	4	R504	5
C310	4	C912	5	CR941	5	LR107	11	R198	4	R511	5
C311	4	C933	11	CR942	5	LR180	4	R199	4	R512	5
C325	11	C938	11	CR950	5	LR201	11	R200	4	R513	5
C329	4	C940	11	CR951	5	LR218	11	R201	4	R518	5
C332	4	C943	11	CR956	6	LR219	11	R202	4	R519	5
C336	11	C947	5	CR966	6	LR280	4	R216	4	R520	5
C351	5	C957	6	CR972	6			R217	4	R521	5
C402	6	C958	11	CR967	11	P101	5	R218	4	R527	5
C403	6	C966	11	CR995	6	P102	5	R225	11	R529	5
C404	6	C967	11			P103	4	R230	4	R537	5
C412	6	C972	6	DL100	6	P160	5	R231	4	R538	5
C415	11	C973	11					R232	4	R542	5
C458	11	C975	8	E900	6	Q130	4	R301	4	R543	5
C460	4	C976	11			Q131	4	R302	4	R544	5
C464	4	C977	11	J9	5	Q154	5	R303	4	R545	5
C466	4	C980	11	J10	4	Q155	5	R304	4	R550	5
C478	6	C981	11	J11	4	Q190	4	R311	4	R551	5
C480	11	C982	5	J100	4	Q460	4	R312	4	R552	5
C487	6	C985	11	J101	5	Q550	5	R329	4	R553	5
C488	6	C988	11	J102	5	Q600	6	R332	4	R554	5
C500	11	C990	11	J103	4	Q623	6	R353	5	R555	5
C501	11	C995	6	J104	5	Q624	6	R361	5	R556	5
C512	5			J105	4	Q645	5	R401	6	R557	5
C513	5	CR100	4	J109	5	Q700	11	R402	6	R558	5
C520	5	CR101	4	J117	4	Q709	5	R403	6	R560	5
C521	11	CR107	11	J119	5	Q710	5	R404	6	R600	6
C528	5	CR130	4	J119	11	Q740	5	R405	6	R601	6
C536	5	CR131	4	J120	4	Q741	5	R411	6	R602	6
C537	5	CR140	4	J120	5	Q742	5	R412	6	R605	6

A1—MAIN BOARD (cont)

CIRCUIT NUMBER	SCHEM NUMBER	CIRCUIT NUMBER	SCHEM NUMBER	CIRCUIT NUMBER	SCHEM NUMBER	CIRCUIT NUMBER	SCHEM NUMBER	CIRCUIT NUMBER	SCHEM NUMBER	CIRCUIT NUMBER	SCHEM NUMBER
R606	6	R709	5	R820	6	R957	6	U200	4	U975	5
R607	6	R710	5	R821	6	R972	6	U200	11	U975	11
R614	6	R713	5	R822	6	R973	6	U300	4	U980	5
R615	6	R723	5	R823	6	R975	5	U300	11	U980	11
R617	6	R724	5	R849	5	R981	5	U350	5	U985	5
R618	6	R731	6	R850	6	R982	5	U350	11	U985	11
R619	6	R732	6	R852	5	R985	5	U400	6		
R620	6	R733	6	R853	5	R986	5	U400	11	VR112	5
R622	6	R734	6	R855	6	R995	6	U450	4	VR125	11
R623	6	R735	6	R856	6			U450	11	VR152	5
R624	6	R736	5	R858	6	S615	6	U475	6	VR225	11
R637	6	R737	5	R860	6			U485	6	VR550	5
R638	6	R738	5	R900	5	TP800	6	U500	5		
R639	6	R742	5	R901	5			U500	11	W101	11
R642	6	R743	5	R903	6	U100	4	U550	5	W103	11
R643	5	R744	5	R904	5	U100	11	U600	6	W104	11
R644	5	R745	5	R907	5	U110	4	U600	11	W105	11
R645	5	R746	5	R910	5	U110	11	U650	5	W106	6
R646	5	R747	5	R912	5	U120	4	U650	11	W107	5
R650	6	R748	5	R924	5	U120	11	U700	5	W108	5
R651	5	R749	5	R936	5	U130	4	U700	11	W109	11
R652	5	R750	5	R937	5	U130	11	U735	6	W112	5
R653	5	R753	5	R939	5	U140	4	U800	6	W120	5
R655	5	R754	5	R940	5	U140	11	U800	11	W121	11
R658	6	R755	5	R941	5	U150	4	U850	5	W122	5
R659	6	R757	5	R942	5	U150	11	U850	11	W122	11
R669	5	R800	6	R943	5	U160	4	U860	5	W141	6
R670	5	R801	6	R944	5	U160	11	U860	6	W151	5
R671	5	R802	6	R945	5	U165	4	U860	11	W160	5
R678	5	R804	6	R946	5	U165	5	U900	5	W500	6
R700	11	R805	6	R947	5	U165	11	U900	11	W610	6
R701	11	R806	6	R950	5	U170	4	U910	5	W850	5
R702	11	R809	6	R951	11	U170	11	U910	11	W918	6
R707	5	R811	11	R952	5	U180	4	U950	6	W919	6
R708	5	R817	6	R956	6	U180	11	U950	11		

*** USED ON 2465B ONLY**

A8—SCALE ILLUMINATION BOARD

CIRCUIT NUMBER	SCHEM NUMBER	CIRCUIT NUMBER	SCHEM NUMBER	CIRCUIT NUMBER	SCHEM NUMBER	CIRCUIT NUMBER	SCHEM NUMBER
DS100	4	DS102	4	W181	4		
DS101	4						

TEST WAVEFORM SETUP INFORMATION

The numbered waveforms below were obtained at the test points indicated on the accompanying schematic diagram and board dolly. The waveforms are representative of signals that may be expected at the associated points when the following setup conditions are observed. Any change(s) from the given setup conditions required to produce a given waveform are noted with that waveform illustration.

2465B/2467B SETUP

Connect a 200-mV, 1-kHz squarewave signal from a signal generator to each Vertical Channel as appropreate via a BNC T-connector, a 50-Ω BNC cable and a dual-input coupler.

Set:

VERTICAL MODE	CH 1
Input Coupling	
CH 1 and CH2	1 MΩ DC
VOLTS/DIV	
CH1 and CH2	50 mV
A and B SEC/DIV	0.5 ms (knobs locked)

TRIGGER	
MODE	AUTO
CH 1 and CH2	1 MΩ DC
SOURCE	VERT
COUPLING	DC

All other control settings are irrelevant.

TEST OSCILLOSCOPE SETUP

Connect the 200-mV, 1-kHz squarewave from the BNC T-connector to the Trigger input of the test oscilloscope using a 50-Ω BNC cable. Trigger the test oscilloscope on the rising edge of the 1-kHz signal and, using a X10 probe with the test oscilloscope, set its Volts/Div and Time/Div ranges as required to obtain the indicated displays.

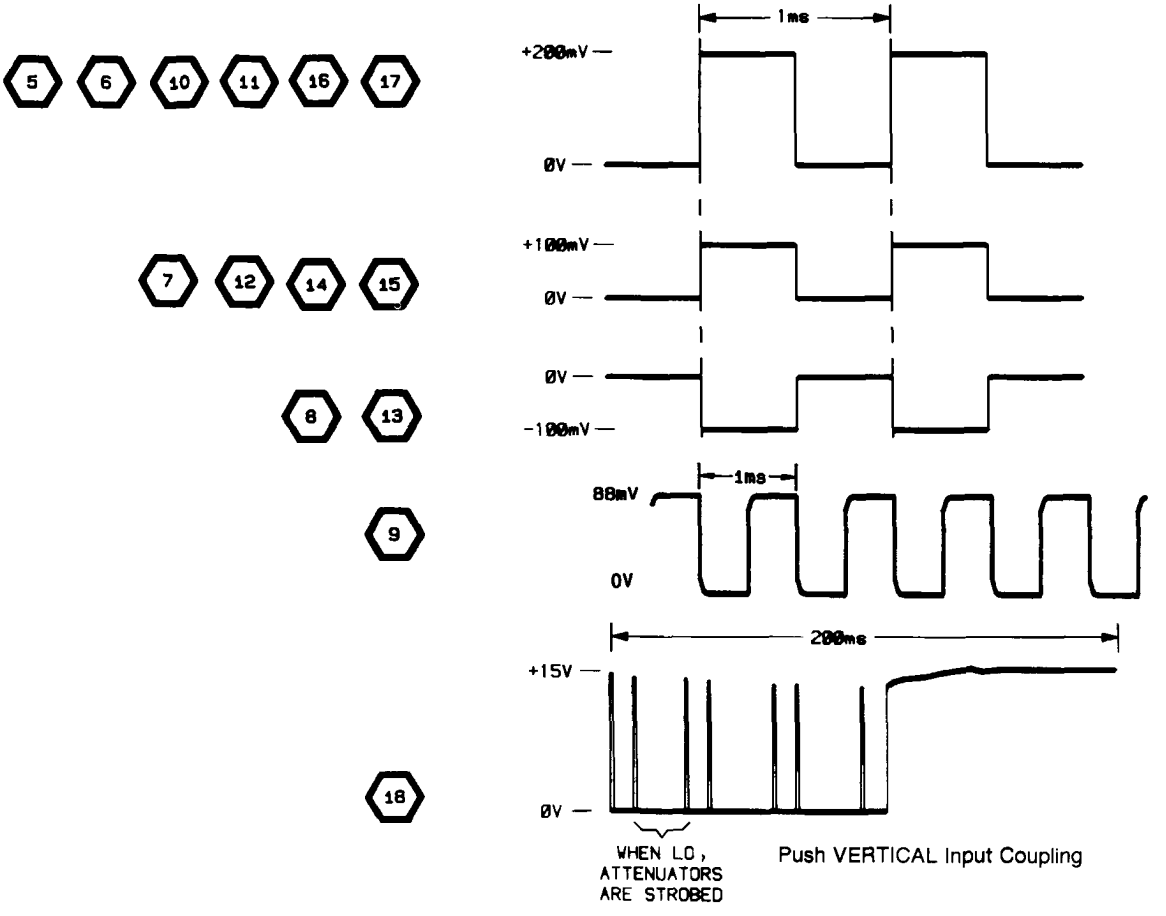

ATTENUATORS AND PREAMPS 4

CIRCUIT NUMBER	SCHEM LOCATION	BOARD LOCATION	CIRCUIT NUMBER	SCHEM LOCATION	BOARD LOCATION	CIRCUIT NUMBER	SCHEM LOCATION	BOARD LOCATION	CIRCUIT NUMBER	SCHEM LOCATION	BOARD LOCATION
ASSEMBLY A1											
C100	1H	5C	CR151	6F	7C	R121	3L	5D	R430	7N	3E
C103	4F	6C	CR152	6E	7C	R123	3B	2J	R450	3N	4E
C105	1H	5C	CR153	6E	7C	R129	5B	6B	R451	3N	4F
C110	2H	6B	CR154	4G	7C	R130	8C	8B	R452	3N	4E
C115	2M	7E	CR155	5G	7C	R131	5C	9B	R453	3N	4F
C116	2N	8F	CR161	5K	2D	R133	4M	8B	R454	6N	4F
C117	3L	6E	CR162	2K	1D	R135	4N	8A	R455	6N	4E
C118	2N	8E	CR163	2K	2D	R136	4C	2J	R456	6N	4E
C130	5B	6C	CR180	3K	7D	R140	6C	8C	R457	6N	4F
C175	6J	2D	CR181	7K	5D	R141	5C	8C	R458	3P	4F
C176	6J	2D	CR200	7H	4C	R142	5C	8C	R459	7P	4G
C177	2J	2D	CR201	7H	4C	R143	6C	8C	R460	8M	4E
C179	2J	2D	CR460	7N	3F	R144	5C	8B	R461	8M	4E
C182	6J	3E	CR461	7N	3E	R149	4D	9B	R462	8M	4E
C183	3J	3E				R159	6K	2D	R463	7M	3E
C184	8L	2F	J10	2H	6B	R161	6K	2D	R464	7P	3E
C185	8L	3B	J11	7H	3A	R162	2K	3C	R465	7N	3F
C200	7H	4C	J100	7P	5G	R163	2K	3C	R466	8P	4G
C202	5F	4C	J103	7K	5C	R180	3K	2E	R469	7N	3E
C203	7L	5C	J105	7P	2E	R181	3K	2E	R473	7P	4G
C205	7H	4C	J117	2M	7E	R182	7K	2E	R502	3C	1H
C211	8H	3A	J120	4M	8A	R183	7K	2E			
C217	8L	3D	J181	4N	8A	R190	3H	1H	U100	1L	6C
C223	3D	2J	J511	10P	1D	R191	3H	1H	U110	4E	8B
C301	10A	1A	J511	2A	1D	R192	3H	1J	U120	5E	8C
C302	9A	3A	J511	8A	1D	R193	3H	1E	U130A	4F	8C
C310	10H	1B	J512	3A	1H	R194	3H	1J	U130B	5F	8C
C311	2H	1C				R195	8L	3E	U130C	5K	8C
C329	9J	2C	L115	2N	7E	R196	8L	3E	U130D	4M	8C
C332	9J	2C	L200	8H	3A	R197	8L	3F	U130E	5M	8C
C460	7N	4E				R198	8K	3F	U130F	4M	8C
C464	7P	3E	LR180	3M	5E	R199	8L	3F	U130G	5B	8C
C466	8N	3E	LR280	6M	4E	R200	7H	4C	U140	4D	8B
						R201	7H	3A	U150	5D	8C
CR100	1K	5C	P103	7K	5C	R202	8H	3A	U160A	2K	3D
CR101	1K	5C				R216	7L	3D	U160B	5K	3D
CR130	5C	8C	Q130	5C	8B	R217	7K	3D	U160C	6K	3D
CR131	6C	8C	Q131	5C	8B	R218	6K	3E	U180D	2K	3D
CR140	4G	7B	Q190	8L	3E	R230	3D	3E	U165A	8L	3F
CR141	4F	7B	Q460A	7N	3E	R231	3C	2E	U170	3H	3E
CR142	4F	7B	Q460B	7M	3E	R232	3B	3E	U180A	3K	2E
CR143	4F	7B				R301	10A	1A	U180B	6K	2E
CR144	4F	7B	R100	1H	6C	R302	9A	3A	U200	5L	4C
CR145	4E	7B	R101	2H	6B	R303	10C	1A	U300	9L	1A
CR146	4E	7B	R102	2H	7B	R304	10A	1A	U450A	6N	4F
CR147	5G	7C	R114	2M	7D	R311	9A	3A	U450B	3N	4F
CR148	5F	7C	R115	2M	7D	R312	9B	2A			
CR149	5F	7C	R117	3K	7E	R329	9H	2C			
CR150	6F	7C	R118	3K	6E	R332	9H	2C			
Partial A1 also shown on diagrams 5, 6, 8, 11, and 12.											
ASSEMBLY A8											
DS100	4P	1M	DS101	5P	1N	DS102	5P	1P	W181	5P	1P
OTHER PARTS											
E200	7P	CHASSIS	J2	7A	CHASSIS	P10	2G	CHASSIS			
			J3	9A	CHASSIS	P11	7G	CHASSIS	R134	4L	CHASSIS
J1	1A	CHASSIS	J4	10A	CHASSIS	P105	7P	CHASSIS			
J1	1A	CHASSIS	J5	7P	CHASSIS	P120	4M	CHASSIS	W10	2G	CHASSIS
J2	7A	CHASSIS				P181	4N	CHASSIS	W11	7G	CHASSIS

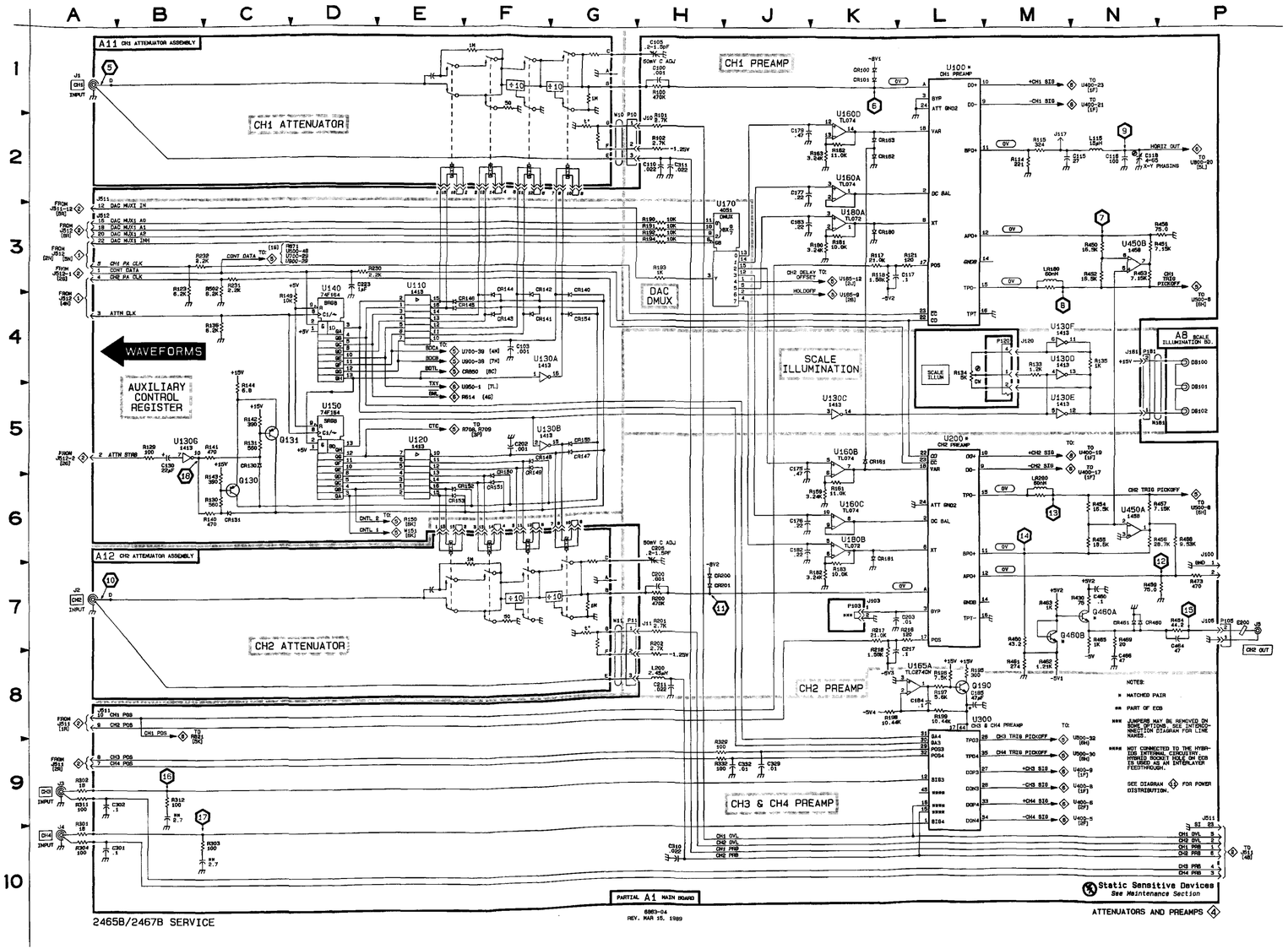

TEST WAVEFORM SETUP INFORMATION

The numbered waveforms below were obtained at the test points indicated on the accompanying schematic diagram and board dolly. The waveforms are representative of signals that may be expected at the associated points when the following setup conditions are observed. Any change(s) from the given setup conditions required to produce a given waveform are noted with that waveform illustration. Where B Sweep setup conditions are referenced with a waveform, it is assumed that the B SEC/DIV knob is set to 100 μs/div unless otherwise noted.

2465B SETUP

Connect a 200-mV, 1-kHz squarewave to the CH1 input of the oscilloscope using a BNC cable.

Set:

VERTICAL MODE	CH1
Input Coupling	
CH 1 and CH 2	1 MΩ DC
VOLTS/DIV	
CH 1 and CH 2	50 mV
CH 1 and CH 2 VAR	In detent
A and B SEC/DIV	200 μs (knobs locked)
A and B SEC/DIV VAR	In detent
TRIGGER	
MODE	AUTO
SOURCE	VERT
COUPLING	NOISE REG
HOLDOFF	In detent
SLOPE	+ (plus)
LEVEL	Stably triggered display
Δt	DLY readout
Δ REF OR DLY POS	1000.0 μs readout
INTENSITY	Midrange
READOUT INTENSITY	Minimum (once DLY readout is set)
HOLDOFF	CCW (counterclockwise)

All other control settings are irrelevant.

TEST OSCILLOSCOPE SETUP

Using a X10 probe with the test oscilloscope, set its Trigger Slope, Trigger Level, Volts/Div and Time/Div ranges as required to obtain the indicated displays.

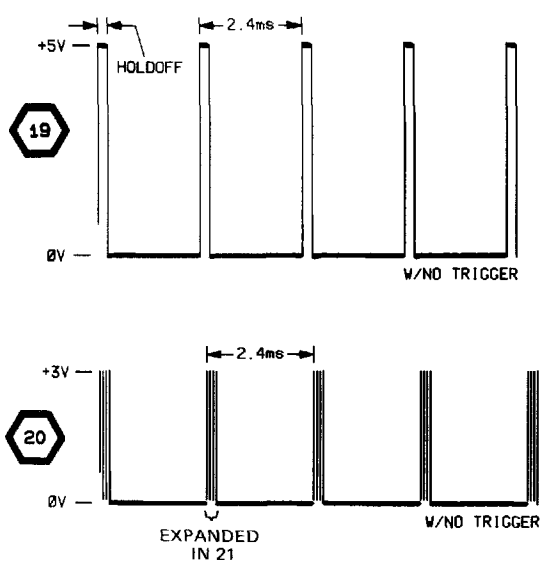

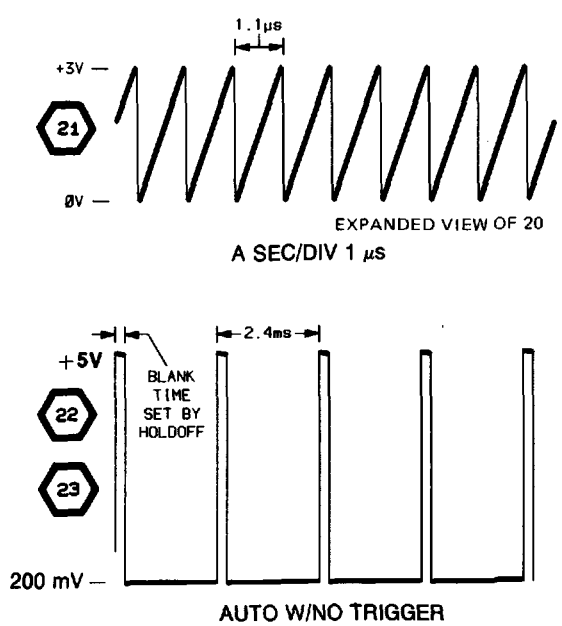

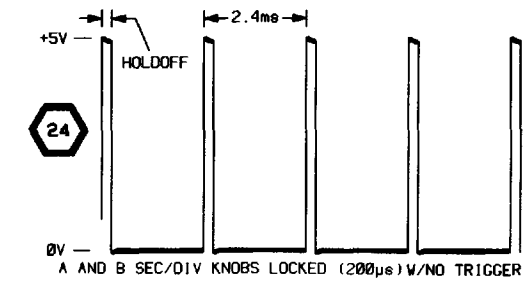

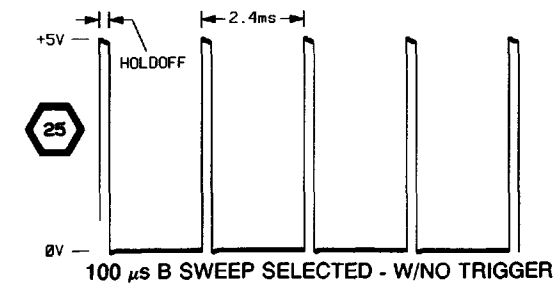

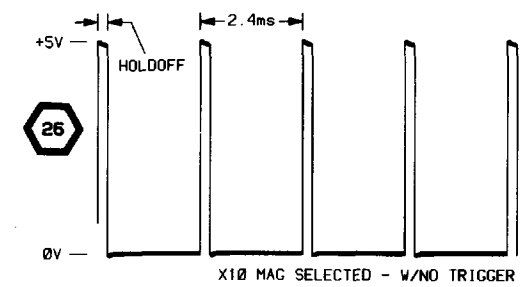

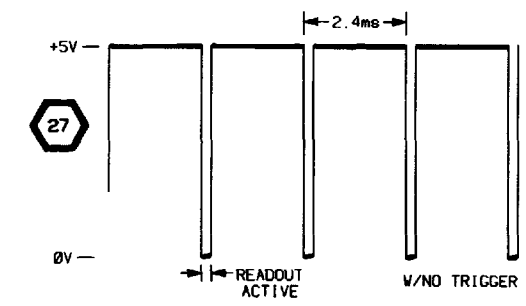

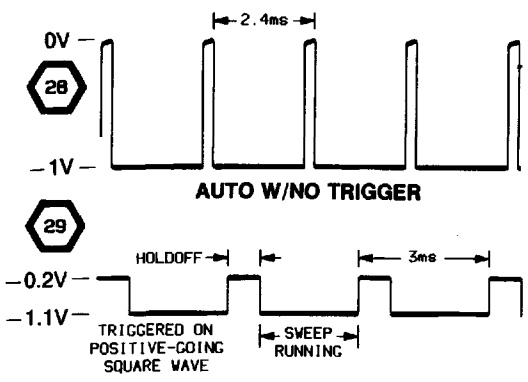

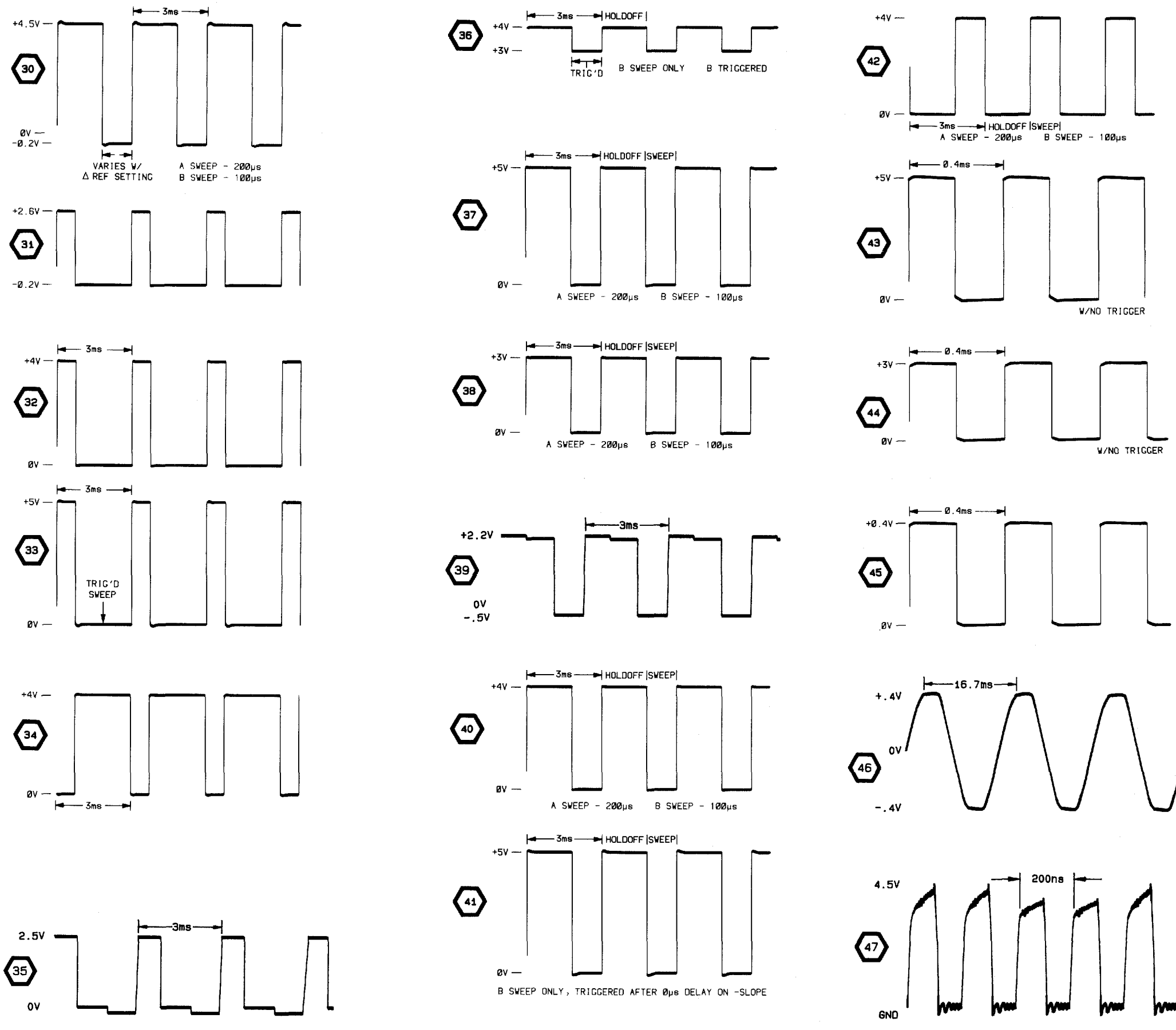

2465B DISPLAY SEQUENCER, TRIG,SWEEPS WAVEFORMS

6019-15

2465B HOLDOFF, DISPLAY SEQUENCER, TRIGGERING, AND SWEEPS 5

CIRCUIT NUMBER	SCHEM LOCATION	BOARD LOCATION	CIRCUIT NUMBER	SCHEM LOCATION	BOARD LOCATION	CIRCUIT NUMBER	SCHEM LOCATION	BOARD LOCATION	CIRCUIT NUMBER	SCHEM LOCATION	BOARD LOCATION
ASSEMBLY A1											
C109	1R	2L	J9	7A	2A	R529	8H	1H	R912	8M	10E
C152	2E	2E	J101	6F	3J	R537	8H	1E	R924	9L	8H
C154	3D	2E	J102	10M	7G	R538	8E	9B	R936	8M	10G
C171	3F	3K	J102	3J	7G	R542	8K	3F	R937	8M	10G
C180	2C	1E	J102	4M	7G	R543	8K	3F	R939	5R	7M
C181	2K	2E	J104	5S	8M	R544	7F	3K	R940	7M	5M
C351	4B	4G	J109	4K	4H	R545	7F	3J	R941	8P	10K
C512	5J	4H	J119	9K	4H	R550	7C	1G	R942	9N	10K
C513	8H	4H	J120	3B	8A	R551	7B	1F	R943*	8N	11J
C520	7F	3H	J191	5A	10K	R552	7B	1F	R944	8N	11H
C528	8H	1H	J411	10K	1K	R553	7C	1F	R945	8N	10K
C536	5J	1G	J411	5A	1K	R554	7C	1G	R946*	5N	7L
C537	8H	2F	J411	5S	1K	R555	8C	1G	R947	5R	7M
C544	7F	3J	J511	8A	1D	R556	7C	1F	R950	6R	7L
C645	6J	6G	J512	10A	1H	R557	7D	1E	R952	7H	8M
C650	8H	8M	J512	1A	1H	R558	8D	1E	R975*	7N	7L
C653	5E	4K	J512	1S	1H	R560	6B	1G	R981	5N	5M
C669	4F	2K	J512	4A	1H	R643	7J	6G	R982	6R	6L
C707	3N	9C				R644	6H	6G	R985	5K	2L
C708	2P	9C	P101A	7E	3J	R645	6H	6G	R986	7P	7L
C709	2P	10B	P101B	7E	3J	R646	7H	6G			
C712	1M	10E	P102B	4M	7G	R651	5B	1K	U165B	7C	3F
C742	2M	7D	P102D	10M	7G	R652	5E	3K	U165C	2C	3F
C743	6M	7D	P160	2E	2K	R653	5H	5K	U165D	2K	3F
C744	6M	7D	P160	2E	2K	R655	6F	1K	U350A	9B	10B
C755	3P	8K				R669	4F	2J	U350B	8E	10B
C830	10B	1L	Q154	3D	2E	R670	4C	2J	U500	4J	4G
C848	8C	9E	Q155	2E	2F	R671	2G	2J	U550A	7C	1F
C849	10B	10G	Q550	7D	2F	R678	5C	2J	U550B	7C	1F
C851	3K	10F	Q645	6H	7G	R707	3P	9C	U550C	6C	1F
C852	3K	10E	Q709	2P	10D	R708	3P	9B	U550D	6C	1F
C853	3K	10F	Q710	2N	10D	R709	2P	10B	U550E	9B	1F
C854	3L	10E	Q740*	5N	7L	R710	1M	10F	U650	2G	4K
C900	7M	10J	Q741	6M	7D	R713	1M	10E	U700	1N	8C
C907	9N	9J	Q742	6M	7D	R723	3L	10E	U850A	8M	9E
C908	9N	11K	Q743	4P	7D	R724	3M	10E	U850A	9L	9E
C912	7M	10G	Q745	4P	7D	R736	2M	10G	U850B	2L	9E
C947	5R	7M	Q941	8P	11K	R737	2M	10F	U850C	8D	9E
C982	5R	6L	Q942	8P	10K	R738	2L	10G	U860A	2L	7F
						R742	4N	8D	U900	7N	10J
CR354	5D	2J	R112	1A	7M	R743	4K	7F	U910A	8M	10G
CR360	5D	3J	R150	7L	8B	R744	4M	8F	U910B	1M	10G
CR503	4H	2J	R152	2D	2F	R745	4N	8C	U975	5N	8M
CR538	8E	9B	R153	2D	2F	R746	6R	6L	U980A	6P	7L
CR539	9E	10B	R154	3D	2E	R747	6M	7F	U980B	6P	7L
CR652	5H	5L	R155	2E	2F	R748	6L	8B	U985	5P	6M
CR653	5E	3K	R156	3D	2E	R749	6M	7D			
CR707	3P	9B	R165	2K	3F	R750	3N	8D	VR112	1P	2L
CR741	3N	7C	R353	5E	3J	R753	3P	9K	VR152	2D	2F
CR742	4N	7D	R361	5E	3J	R754	3P	8K	VR550	6B	1F
CR746	6R	7L	R503	4H	2H	R755	3R	9K			
CR747	6R	7L	R504	4H	2J	R757	4N	8D	W107	6R	7M
CR752	3P	8J	R511	4H	3H	R849	9D	9E	W108	6R	6M
CR753	4P	8J	R512	4H	3H	R852	3K	10E	W112	1A	7M
CR850	9C	10E	R513	8H	3H	R853	3K	10E	W120	1S	1H
CR941	8N	11J	R518	4K	3H	R900	9M	10F	W122	8A	5H
CR942	8N	11J	R519	4K	3H	R901	9M	10E	W151	6L	8C
CR950	6R	7L	R520	7F	2H	R904	10M	10K	W160	2E	3F
CR951	6R	7L	R521	7F	3H	R907	9N	9J	W850	9L	10F
			R527	8H	1H	R910	7M	10F			
Patrial A1 also shown on diagrams 4, 6, 8, and 11.											
OTHER PARTS											
J7	6S	CHASSIS	P107	6S	CHASSIS	P122	8A	CHASSIS			
J8	6S	CHASSIS	P108	6S	CHASSIS						
J12	1A	CHASSIS	P109	4K	CHASSIS	R351	4A	CHASSIS			
			P120	3B	CHASSIS	R352	4B	CHASSIS			

***See Part List for serial number ranges.**

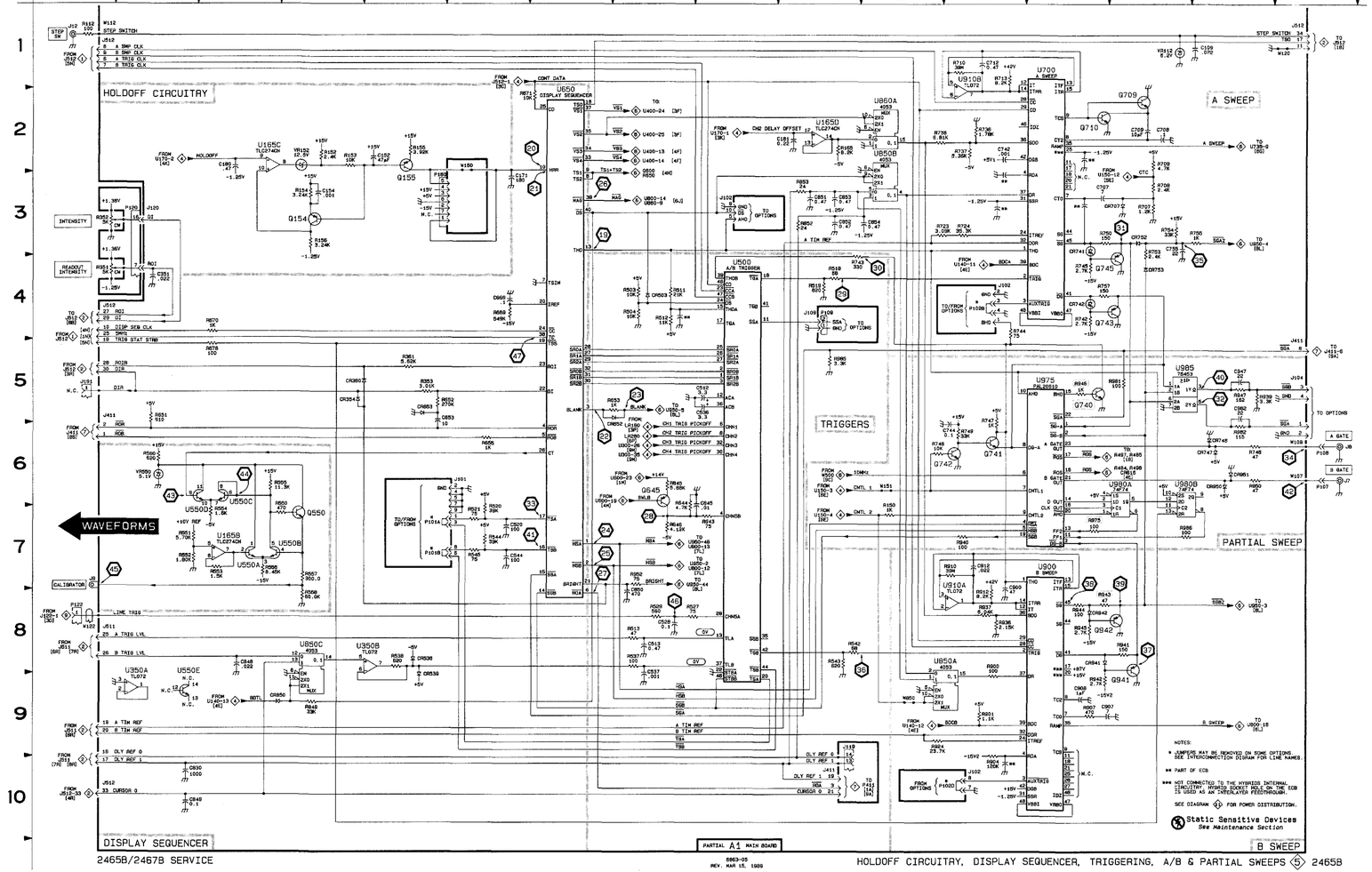

TEST WAVEFORM SETUP INFORMATION

The numbered waveforms below were obtained at the test points indicated on the accompanying schematic diagram and board dolly. The waveforms are representative of signals that may be expected at the associated points when the following setup conditions are observed. Any change(s) from the given setup conditions required to produce a given waveform are noted with that waveform illustration. Where B Sweep setup conditions are referenced with a waveform, it is assumed that the B SEC/DIV knob is set to 100 μs/div unless otherwise noted.

2467B SETUP

Connect a 200-mV, 1-kHz squarewave to the CH1 input of the oscilloscope using a BNC cable.

Set:

VERTICAL MODE	CH1
Input Coupling	
CH 1 and CH 2	1 MΩ DC
VOLTS/DIV	
CH 1 and CH 2	50 mV
CH 1 and CH 2 VAR	In detent
A and B SEC/DIV	200 μs (knobs locked)
A and B SEC/DIV VAR	In detent
TRIGGER	
MODE	AUTO
SOURCE	VERT
COUPLING	NOISE REG
HOLDOFF	In detent
SLOPE	+ (plus)
LEVEL	Stably triggered display
Δt	DLY readout
Δ REF OR DLY POS	1000.0 μs readout
INTENSITY	Midrange
READOUT INTENSITY	Minimum (once DLY readout is set)
HOLDOFF	CCW (counterclockwise)

All other control settings are irrelevant.

TEST OSCILLOSCOPE SETUP

Using a X10 probe with the test oscilloscope, set its Trigger Slope, Trigger Level, Volts/Div and Time/Div ranges as required to obtain the indicated displays.

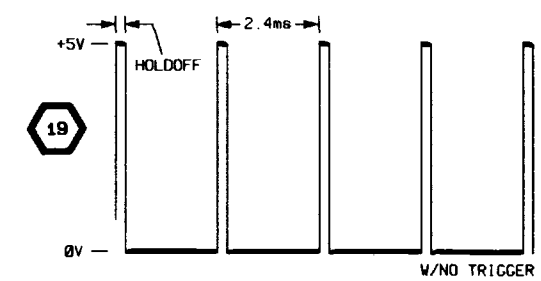

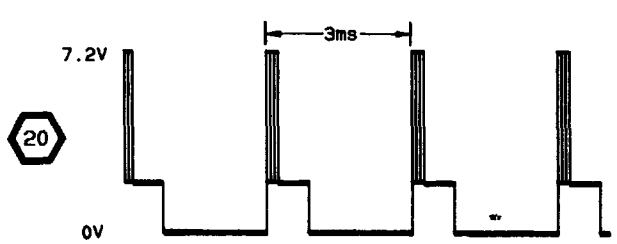

EXPANDED IN 21

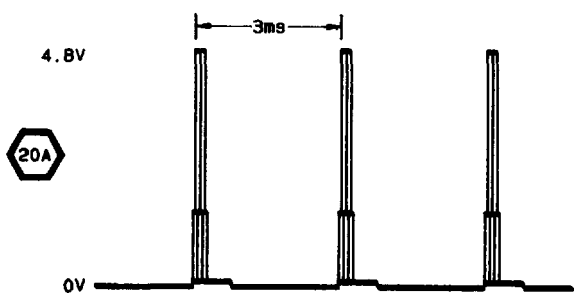

EXPANDED IN 21A

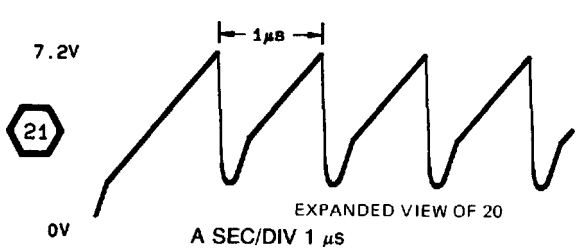

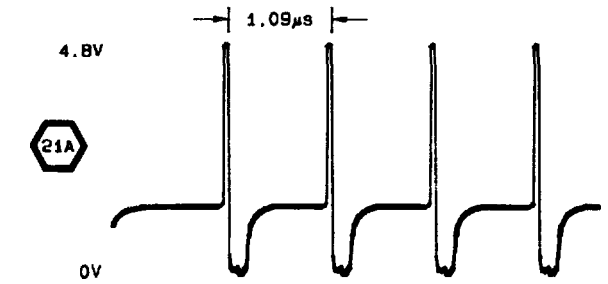

EXPANDED VIEW OF 20A

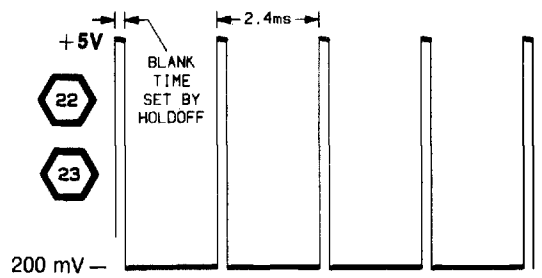

AUTO W/NO TRIGGER

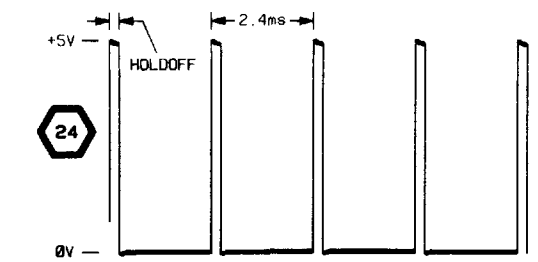

A AND B SEC/DIV KNOBS LOCKED (200μs) W/NO TRIGGER

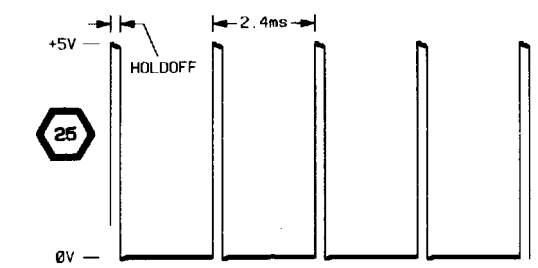

100 μs B SWEEP SELECTED - W/NO TRIGGER

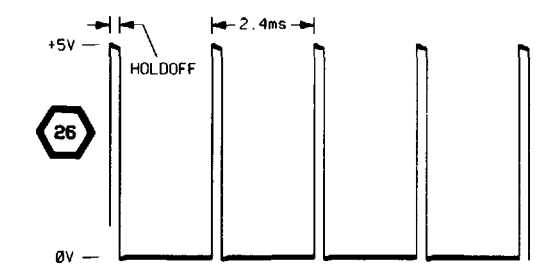

X10 MAG SELECTED - W/NO TRIGGER

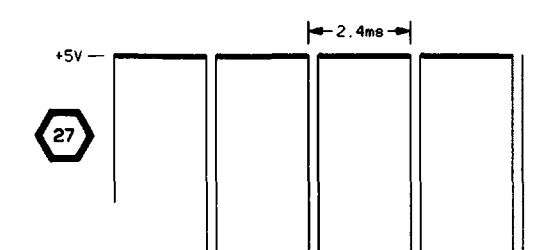

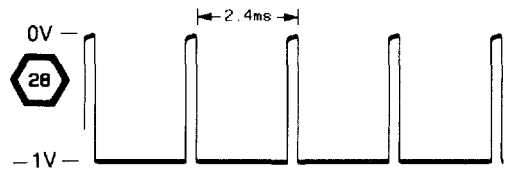

AUTO W/NO TRIGGER

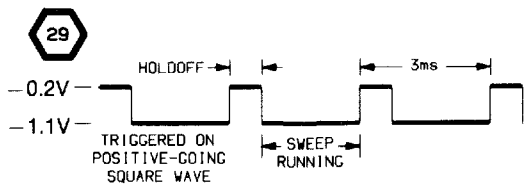

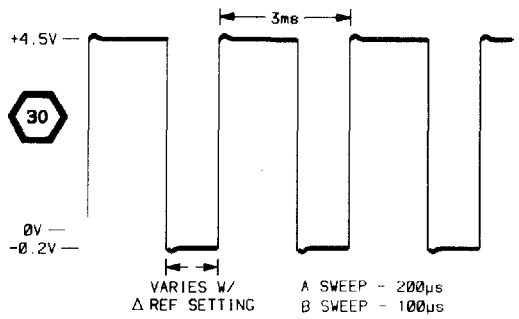

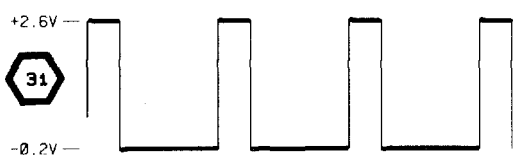

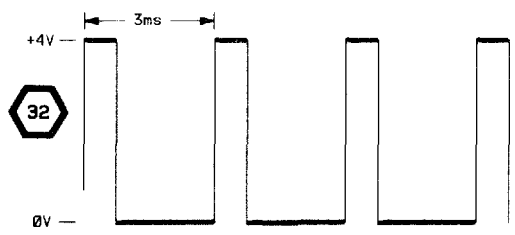

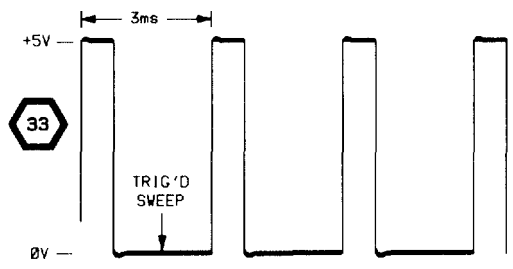

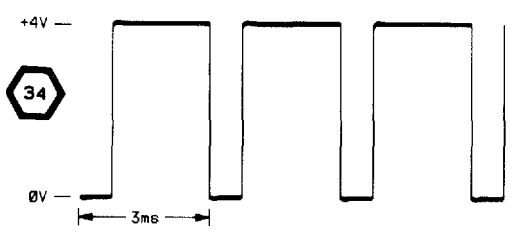

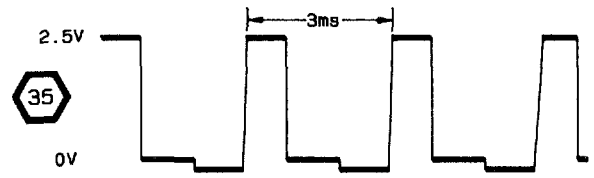

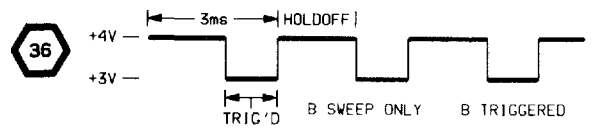

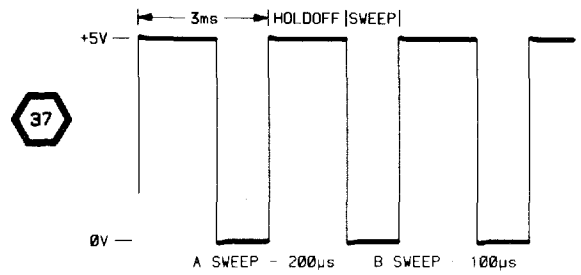

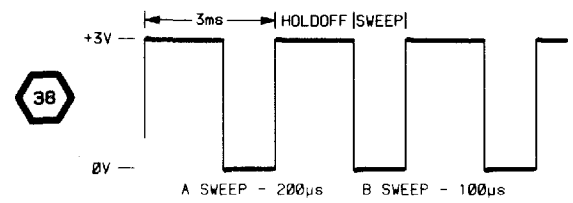

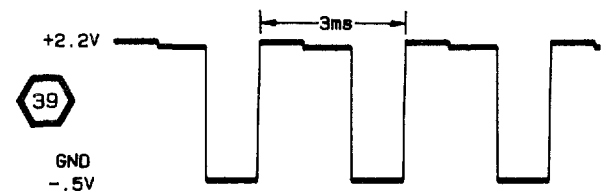

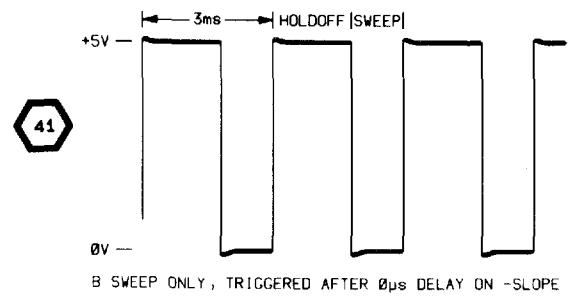

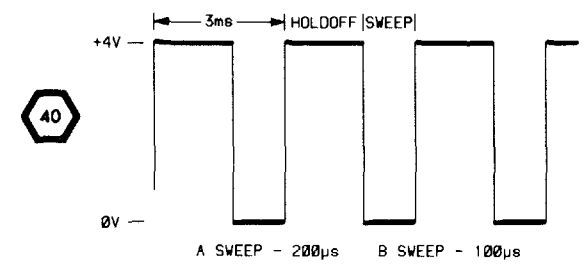

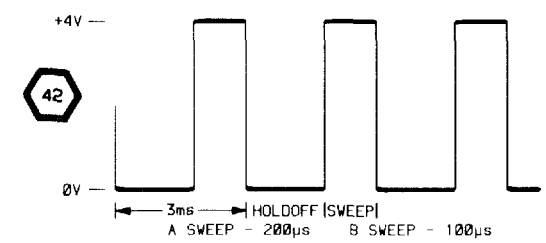

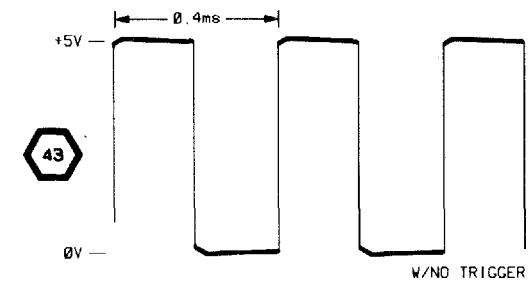

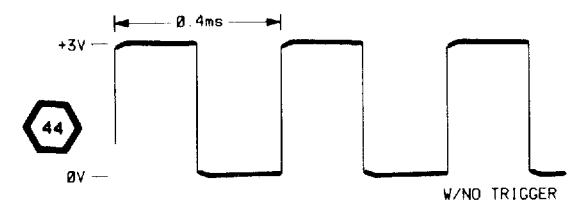

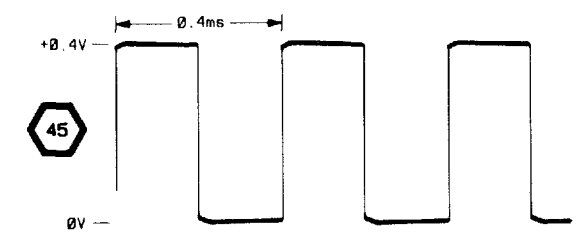

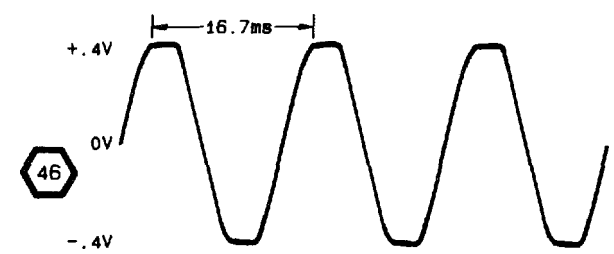

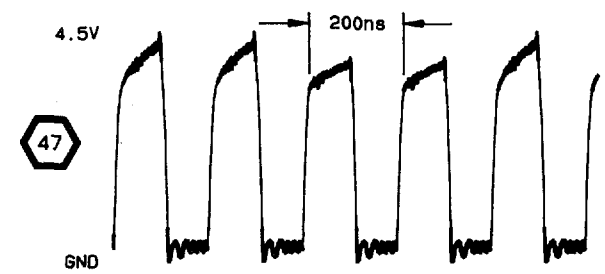

2467B DISPLAY SEQUENCER, TRIG,SWEEPS WAVEFORMS

6019-16

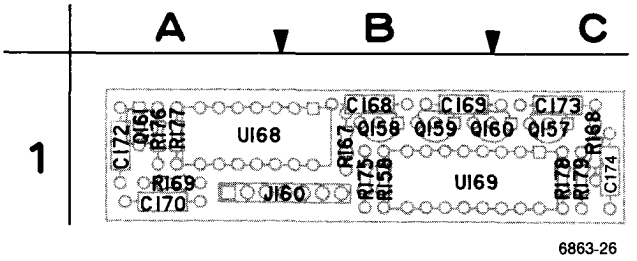

Figure 10-8. A15—Holdoff board.

Static Sensitive Devices
See Maintenance Section

COMPONENT NUMBER EXAMPLE

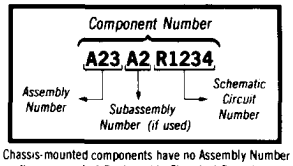

Chassis-mounted components have no Assembly Number prefix—see end of Replaceable Electrical Parts List

A15—HOLDOFF BOARD

CIRCUIT NUMBER	SCHEM NUMBER	CIRCUIT NUMBER	SCHEM NUMBER	CIRCUIT NUMBER	SCHEM NUMBER	CIRCUIT NUMBER	SCHEM NUMBER
C168	12	J160	12	R158	5	R179	5
C169	5			R167	5		
C170	5	Q157	5	R168	5	U168	5
C172	5	Q158	5	R169	5	U168	12
C173	5	Q159	5	R175	5	U169	5
C174	5	Q160	5	R176	5		
		Q161	5	R177	5		
J160	5			R178	5		

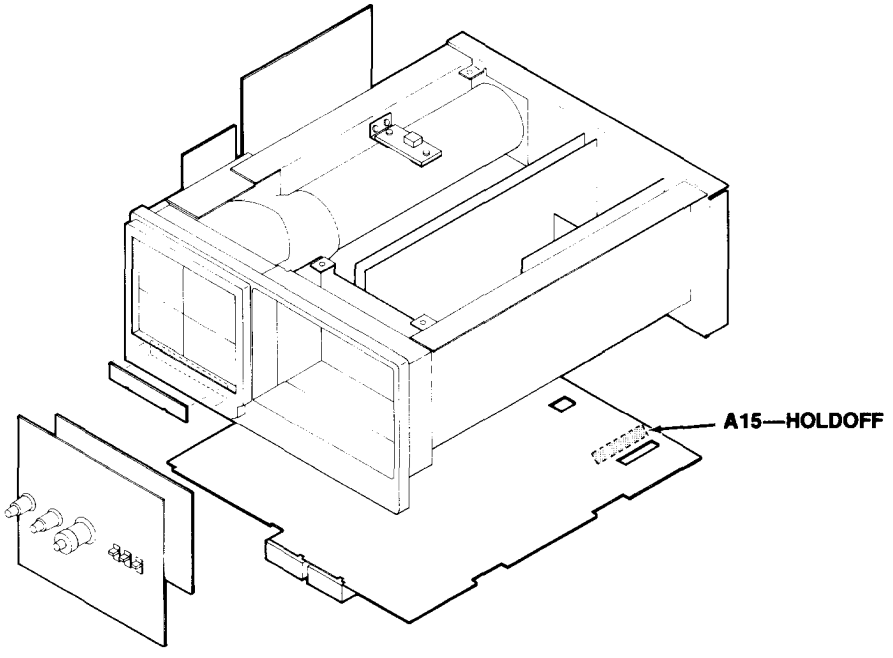

2467B HOLDOFF, DISPLAY SEQUENCER, TRIGGERING and SWEEPS 5

CIRCUIT NUMBER	SCHEM LOCATION	BOARD LOCATION	CIRCUIT NUMBER	SCHEM LOCATION	BOARD LOCATION	CIRCUIT NUMBER	SCHEM LOCATION	BOARD LOCATION	CIRCUIT NUMBER	SCHEM LOCATION	BOARD LOCATION
ASSEMBLY A1											
C109	1R	2L	J9	7A	2A	R537	8H	1E	R912	8M	10E
C152	2C	2E	J101	6F	3J	R538	8E	9B	R924	9L	8H
C154	2C	2E	J102	10M	7G	R542	8K	3F	R936	8M	10G
C180	2B	1E	J102	3J	7G	R543	8K	3F	R937	8M	10G
C181	2K	2E	J102	4M	7G	R544	7F	3K	R939	5R	7M
C351	4B	4G	J104	5S	6M	R545	7F	3J	R940	7M	5M
C512	5J	4H	J109	4K	4H	R550	7C	1G	R941	8P	10K
C513	8H	4H	J119	9K	4H	R551	7B	1F	R942	9N	10K
C520	7F	3H	J120	2B	8A	R552	7B	1F	R943*	8N	11J
C528	8H	1H	J191	5A	10K	R553	7C	1F	R944	8N	11H
C536	5J	1G	J411	10K	1K	R554	7C	1G	R945	8N	10K
C537	8H	2F	J411	5A	1K	R555	6C	1G	R946*	5N	7L
C544	7F	3J	J411	5S	1K	R556	7C	1F	R947	5R	7M
C645	6J	6G	J511	8A	1D	R557	7D	1E	R950	6R	7L
C650	8H	8M	J512	10A	1H	R558	8D	1E	R952	7H	8M
C653	5E	4K	J512	1A	1H	R560	6B	1G	R975*	7N	7L
C660	2C	1G	J512	1S	1H	R643	7J	6G	R951	8N	5M
C669	5F	2K	J512	4A	1H	R644	6H	6G	R982	6R	8L
C707	3N	9C				R645	6H	6G	R985	5K	2L
C708	2P	9C	P101	7E	3J	R646	7H	6G	R986	7P	7L
C709	2P	10B	P102B	4M	7G	R649	5G	5K			
C712	1M	10E	P102D	10M	7G	R651	5B	1K	U165B	7C	3F
C742	2M	7D	P180	2D	2K	R652	5E	3K	U165C	2B	3F
C743	6M	7D	P160	3F	2K	R653	5H	5K	U165D	2K	3F
C744	6M	7D				R655	6F	1K	U350A	9B	10B
C755	3P	8K	Q154	3C	2E	R669	5F	2J	U350B	8E	10B
C830	10B	1L	Q155	2C	2F	R670	4C	2J	U500	4J	4G
C848	8C	9E	Q550	7D	2F	R671	2G	2J	U550A	7C	1F
C849	10B	10G	Q645	6H	7G	R678	5C	2J	U550B	7C	1F
C851	3K	10F	Q709	2P	10D	R707	3P	9C	U550C	6C	1F
C852	3K	10E	Q710	2N	10D	R708	3P	9B	U550D	6C	1F
C853	3K	10F	Q740*	5N	7L	R709	2P	10B	U550E	9B	1F
C854	3L	10E	Q741	6M	7D	R710	1M	10F	U650	2G	4K
C900	7M	10J	Q742	6M	7D	R713	1M	10E	U700	1N	8C
C907	9N	9J	Q743	4P	7D	R723	3L	10E	U850A	8M	9E
C908	9N	11K	Q745	4P	7D	R724	3M	10E	U850B	2L	9E
C912	7M	10Q	Q941	9P	11K	R736	2M	10G	U850C	6D	9E
C947	5R	7M	Q942	8P	10K	R737	2M	10F	U860A	2L	7F
C982	5R	8L				R738	2L	10G	U900	7N	10J
			R112	1A	7M	R742	4N	8D	U910A	8M	10G
CR354	5D	2J	R150	7L	8B	R743	4K	7F	U910B	1M	10G
CR360	5D	3J	R152	2C	2F	R744	4M	8F	U975	5N	8M
CR503	4H	2J	R153	2C	2F	R745	4N	8C	U980A	6P	7L
CR538	8E	9B	R154	2B	2E	R746	6R	6L	U980B	6P	7L
CR539	9E	10B	R155	2C	2F	R747	6M	7F	U985	5P	6M
CR652	5H	5L	R156	3B	2E	R748	6L	8B			
CR653	5E	3K	R165	2K	3F	R749	6M	7D	VR112	1P	2L
CR707	3P	9B	R353	5E	3J	R750	3N	8D	VR152	2C	2F
CR741	3N	7C	R361	5E	3J	R753	3P	9K	VR550	6B	1F
CR742	4N	7D	R503	4H	2H	R754	3P	8K			
CR746	6R	7L	R504	4H	2J	R755	3R	9K	W107	6R	7M
CR747	6R	7L	R511	4H	3H	R757	4N	8D	W108	6R	6M
CR752	3P	8J	R512	4H	3H	R849	9D	9E	W112	1A	7M
CR753	4P	8J	R513	8H	3H	R852	3K	10E	W120	1S	1H
CR850	9C	10E	R518	4K	3H	R853	3K	10E	W122	8A	5H
CR941	8N	11J	R519	4K	3H	R900	9M	10F	W151	6L	8C
CR942	8N	11J	R520	7F	2H	R901	9M	10E	W850	9L	10F
CR950	6R	7L	R521	7F	3H	R904	10M	10K			
CR951	6R	7L	R527	8H	1H	R907	9N	9J			
			R529	8H	1H	R910	7M	10F			
Patrial A1 also shown on diagrams 4, 6, 8, 11, and 12.											
ASSEMBLY A15											
C169	2D	1B	Q157	2D	1C	R169	2E	1A	U169A	3D	1B
C170	2E	1A	Q158	2F	1B	R175	4D	1B	U169B	3D	1B
C172	3E	1A	Q159	3D	1B	R176	2F	1A	U169C	4D	1B
C173	2E	1C	Q160	3D	1B	R177	3F	1A	U169D	4D	1B
C174	2E	1C	Q161	3F	1A	R178	3E	1C	U169E	4D	1B
						R179	2E	1C	U169F	3D	1B
J160	2D	1B	R158	3D	1B				U169G	2D	1B
J160	3F	1B	R167	2E	1B	U168A	3E	1A	U169H	2F	1B
			R168	3F	1C	U168B	2E	1A			
Patrial A15 also shown on diagram 12.											
OTHER PARTS											
J7	6S	CHASSIS				P109	4K	CHASSIS			
J8	6S	CHASSIS	P107	6S	CHASSIS	P120	2B	CHASSIS	R351	4A	CHASSIS
J12	1A	CHASSIS	P108	6S	CHASSIS	P122	8A	CHASSIS	R352	3A	CHASSIS

***See Part List for serial number ranges.**

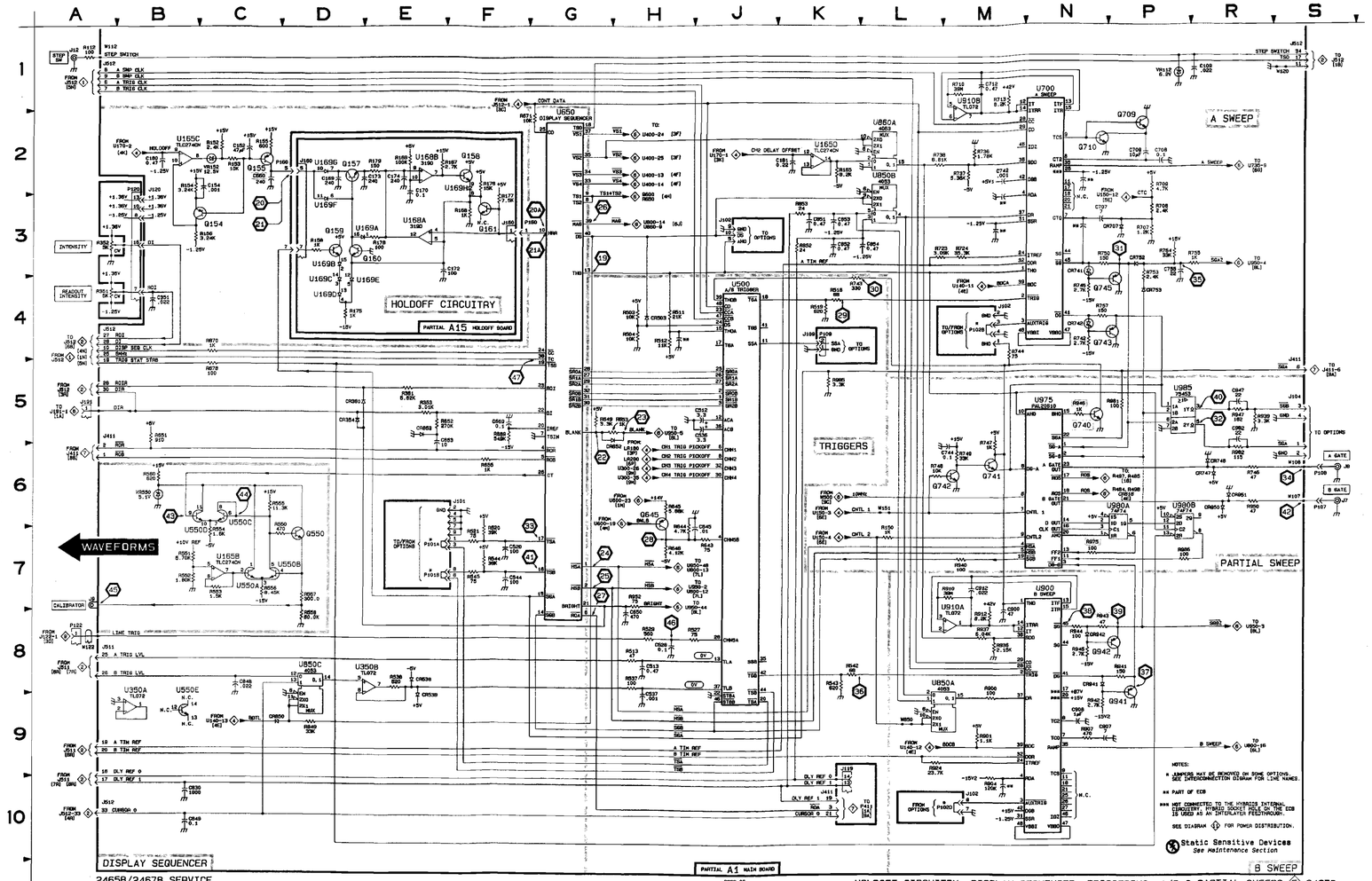

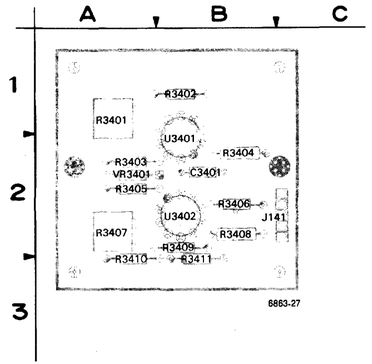

Static Sensitive Devices
See Maintenance Section

COMPONENT NUMBER EXAMPLE

Component Number: A23 A2 R1234
Assembly Number — Subassembly Number (if used) — Schematic Circuit Number

Chassis-mounted components have no Assembly Number prefix—see end of Replaceable Electrical Parts List.

Figure 10-9. A14—Dynamic Centering board.

A14—DYNAMIC CENTERING BOARD

CIRCUIT NUMBER	SCHEM NUMBER	CIRCUIT NUMBER	SCHEM NUMBER	CIRCUIT NUMBER	SCHEM NUMBER	CIRCUIT NUMBER	SCHEM NUMBER
C3401	6	R3403	6	R3408	6	U3402	6
J141	6	R3404	6	R3409	6	VR3401	6
J141	6	R3405	6	R3410	6		
R3401	6	R3406	6	R3411	6		
R3402	6	R3407	6	U3401	6		

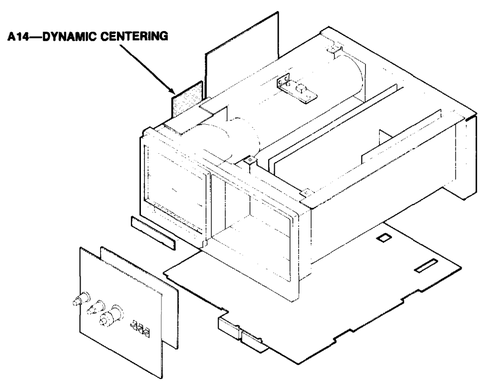

TEST WAVEFORM SETUP INFORMATION

The numbered waveforms below were obtained at the test points indicated on the accompanying schematic diagram and board dolly. The waveforms are representative of signals that may be expected at the associated points when the following setup conditions are observed. Any change(s) from the given setup conditions required to produce a given waveform are noted with that waveform illustration. Where B Sweep setup conditions are referenced with a waveform, it is assumed that the B SEC/DIV knob is set to 100 μs/div unless otherwise noted.

2465B SETUP

Connect a 200-mV, 1-kHz squarewave to the CH1 input of the oscilloscope using a BNC cable.

Set:

VERTICAL MODE	CH1
Input Coupling	
CH1 and CH2	1 MΩ DC
VOLTS/DIV	
CH1 and CH2	50 mV
CH1 and CH2 VAR	In detent
A and B SEC/DIV	200 μs (knobs locked)
A and B SEC/DIV VAR	In detent
TRIGGER	
MODE	AUTO
SOURCE	VERT
COUPLING	NOISE REJ
HOLDOFF	In detent
SLOPE	+ (plus)
LEVEL	Stably triggered display

Δt	Δt readout
Δ REF OR DLY POS	1000.0 μs readout
INTENSITY	Midrange
READOUT INTENSITY	Minimum (once Δt readout is set)

All other control settings are irrelevant.

TEST OSCILLOSCOPE SETUP

Using a X10 probe with the test oscilloscope, set its Trigger Slope, Trigger Level, Volts/Div and Time/Div ranges as required to obtain the indicated displays.

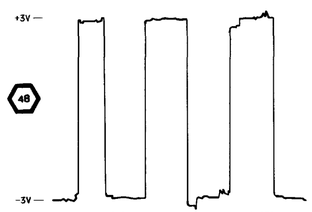

W/READOUT ON, SIGNAL CONSTANTLY CHANGES

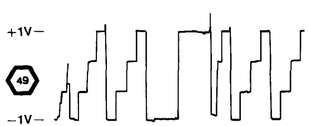

W/READOUT ON, SIGNAL CONSTANTLY CHANGES

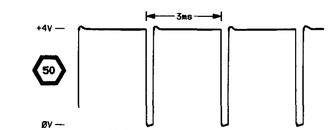

W/READOUT OFF

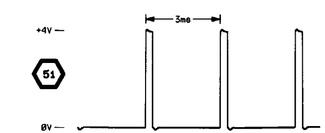

W/READOUT OFF

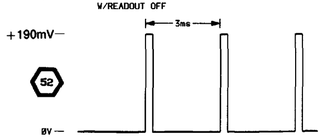

(52 MAY LOOK LIKE 53) W/READOUT OFF

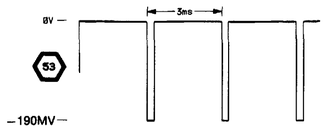

W/READOUT OFF (53 MAY LOOK LIKE 52)

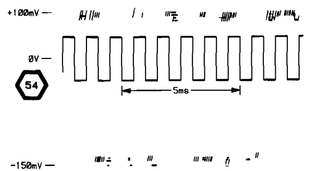

VARIES W/READOUT AND VERTICAL POSITION

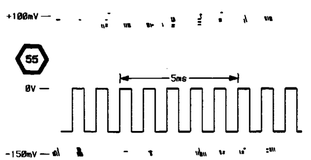

VARIES W/READOUT AND VERTICAL POSITION

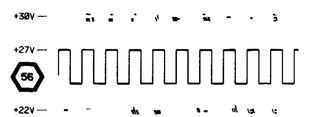

VARIES W/READOUT AND VERTICAL POSITION

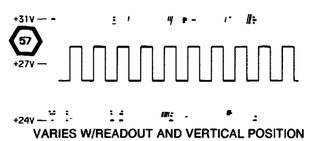

VARIES W/READOUT AND VERTICAL POSITION

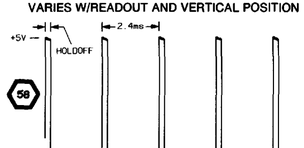

100 μs B SWEEP SELECTED - W/NO TRIGGER

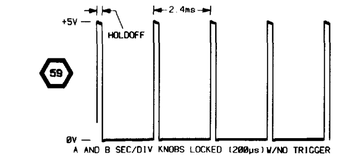

A AND B SEC/DIV KNOBS LOCKED (200μs) W/NO TRIGGER

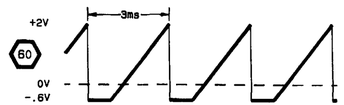

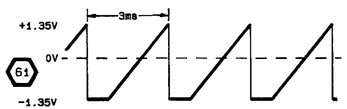

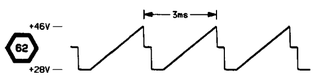

VARIES W/HORIZONTAL POSITION

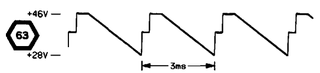

VARIES W/HORIZONTAL POSITION

B SWEEP 100 μS

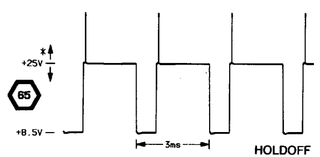

AMPLITUDE VARIES W/INTENSITY
A AND B SWEEP 200 μS, DLY 0.0 READOUT OFF

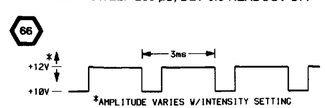

*AMPLITUDE VARIES W/INTENSITY SETTING

A SWEEP 200 μS

6863-38

2465B CHANNEL SWITCH AND OUTPUT AMPLIFIERS 6

CIRCUIT NUMBER	SCHEM LOCATION	BOARD LOCATION	CIRCUIT NUMBER	SCHEM LOCATION	BOARD LOCATION	CIRCUIT NUMBER	SCHEM LOCATION	BOARD LOCATION	CIRCUIT NUMBER	SCHEM LOCATION	BOARD LOCATION
ASSEMBLY A1											
C402	3F	6F	J411	4A	1K	R487	2C	4M	R821	5K	7E
C403	2H	5J	J411	9N	1K	R488	2C	4M	R822	5B	7E
C404	2J	5J	J511	4A	1D	R489	2B	3M	R823	5K	9E
C412	2F	5F	J511	5A	1D	R490	1C	4K	R850	8J	10G
C478	3E	4L	J512	10N	1H	R491	1E	3K	R855	6B	7F
C487	2C	4M	J512	4N	1H	R492	2E	3L	R856	6L	10E
C488	2C	3M	J512	9A	1H	R493	2E	3L	R858	6B	10E
C601	2K	5J	J512	9N	1H	R494	2D	3L	R860	6B	10D
C617	4L	8G	J949	9K	10K	R495	2F	4K	R903	7L	7K
C625	1M	7G				R496	1D	3L	R956	8K	8L
C735	6H	8E	L403	2H	5J	R497	1C	7L	R957	8L	8K
C803	6L	9G	L605	2L	6J	R498	4D	5K	R972	9N	10L
C804	6M	9G	L606	2K	6K	R501	10B	1K	R973	9M	10L
C805	7M	9G	L607	2K	6H	R600	4M	7K	R995	9B	8L
C806	5M	8F	L608	2L	6H	R601	2K	5J			
C808	5M	8G	L609	2K	6J	R602	2L	5J	S615	4K	10B
C809	5M	8G	L610	2K	6H	R605	2L	5J			
C817	5C	8F	L619	4M	7H	R606	2K	6J	TP800	2B	3L
C822	5B	9E	L619	4M	7K	R607	2K	6H			
C823	5K	6E	L628	3N	8J	R614	4H	8F	U400	1F	6F
C957	8K	8L	L633	2N	8J	R615	4K	10B	U475A	3D	5L
C972	9N	10L	L644	3N	6K	R617	4L	6G	U475B	3D	5L
C995	9B	8L				R618	4L	6H	U475C	1D	5L
			Q600	4J	5K	R619	4M	7H	U475D	3E	5L
CR476	3E	4K	Q623	1M	7H	R620	4N	8H	U485A	2D	4L
CR484	4D	4L	Q624	1L	7H	R622	4L	7H	U485B	2D	4L
CR485	2C	4M				R623	1L	7H	U485C	1C	4L
CR495	2E	3L	R401	3F	6F	R624	1M	7G	U485D	1C	4L
CR500	4J	7K	R402	3F	6F	R637	3L	8K	U600	1L	6J
CR601	3N	7K	R403	2J	5J	R638	3L	7K	U735A	5J	9F
CR616	4H	7L	R404	3J	5J	R639	3J	7K	U735B	6H	9F
CR619	4M	7G	R405	2J	6J	R642	4J	5K	U735C	6H	9F
CR620	3N	8H	R411	2H	6J	R650	4J	5K	U735D	6H	9F
CR621	3N	8H	R412	2F	5F	R658	2K	8K	U735E	6H	9F
CR958	9L	8L	R416	2F	4F	R659	3K	7K	U800	4M	9F
CR968	8M	10L	R417	2F	4G	R731	5H	8E	U860B	6K	7F
CR972	9M	10L	R470	2C	4M	R732	6H	9E	U860C	6B	7F
CR995	9B	8L	R471	4D	4M	R733	6J	9F	U950	7M	8K
			R476	3F	4K	R734	6J	9F			
DL100	1G	6L	R477	3E	3K	R735	6H	8F	W106	9A	8M
DL100	1G	6F	R478	3E	4K	R800	7L	9G	W141	7C	10G
			R479	2E	5K	R801	7K	9G	W141	7F	10G
E900	6N	9G	R480	2D	3K	R802	5L	9G	W500	9B	1K
			R481	3D	4L	R804	6M	9G	W610	2K	5H
J191	8K	10K	R482	3D	4L	R805	6M	9G	W918	6N	8G
J191	8N	10K	R483	2D	4L	R806	7M	9G	W919	6N	9G
J191	9A	10K	R484	4D	4L	R809	6M	8G			
J411	10A	1K	R485	1C	4M	R817	5C	7F			
J411	2A	1K	R488	2C	4M	R820	5K	6F			
Patrial A1 also shown on diagrams 4, 5, 8, and 11.											
ASSEMBLY A9											
P191	8K	4B	R1833	8J	1C	R1834	8J	1B	R1842	8J	1C
Patrial A9 also shown on diagrams 8 and 12.											
ASSEMBLY A14											
C3401	7C	2B	R3402	8D	1B	R3408	6E	2B	U3402	5E	2B
			R3403	5D	2A	R3409	6D	2B			
J141	5E	2C	R3404	8E	2B	R3410	6C	2A	VR3401	5C	2A
J141	7C	2C	R3405	6C	2A	R3411	6C	2B			
			R3406	6C	2B						
R3401	7E	1A	R3407	6E	2A	U3401	7E	1B			
OTHER PARTS											
J6	9A	CHASSIS	P106	9A	CHASSIS				W916	2N	CHASSIS
			P141	5F	CHASSIS	P141	7C	CHASSIS	W917	3N	CHASSIS

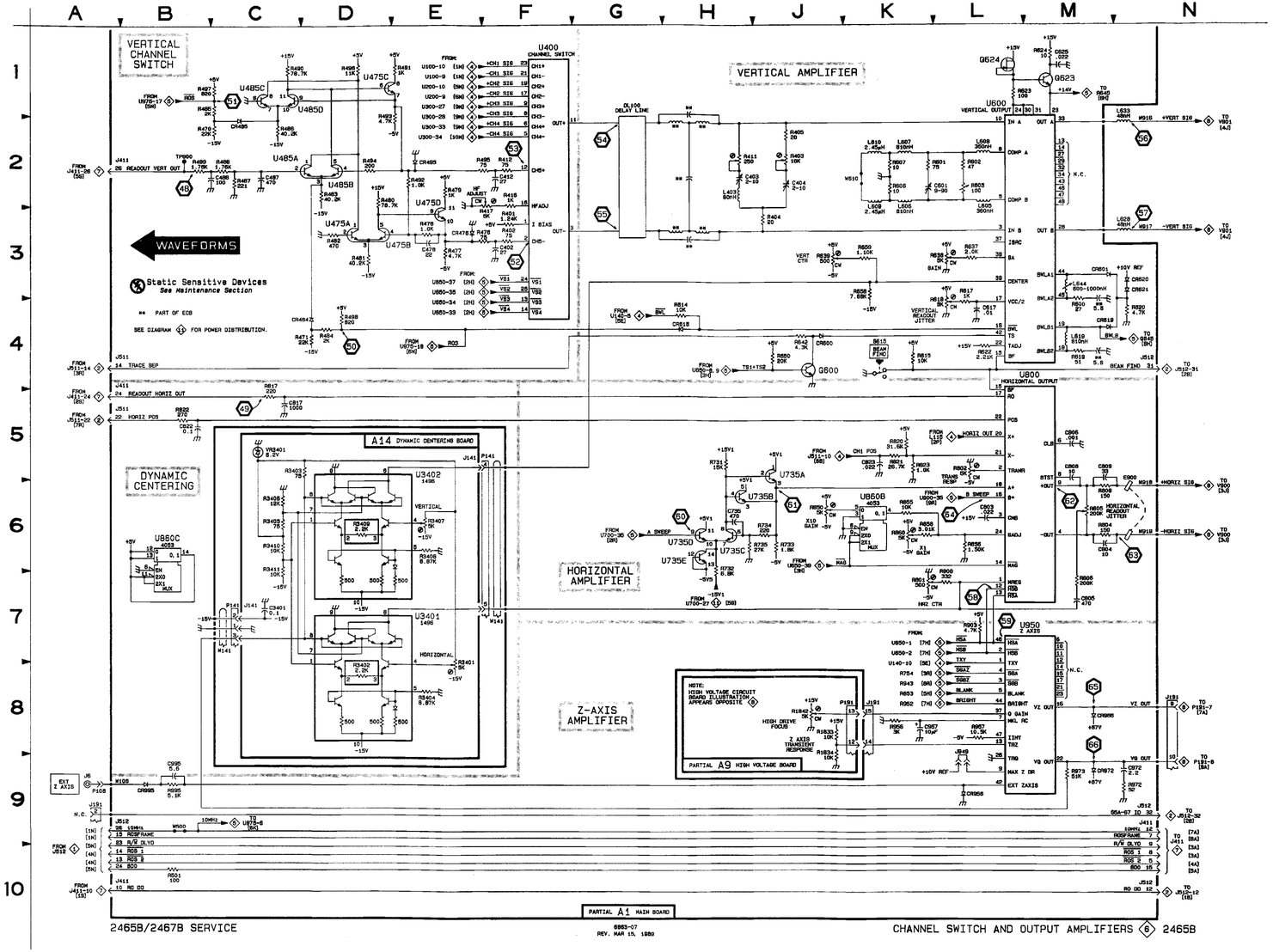

TEST WAVEFORM SETUP INFORMATION

The numbered waveforms below were obtained at the test points indicated on the accompanying schematic diagram and board dolly. The waveforms are representative of signals that may be expected at the associated points when the following setup conditions are observed. Any change(s) from the given setup conditions required to produce a given waveform are noted with that waveform illustration. Where B Sweep setup conditions are referenced with a waveform, it is assumed that the B SEC/DIV knob is set to 100 μs/div unless otherwise noted.

2467B SETUP

Connect a 200-mV, 1-kHz squarewave to the CH1 input of the oscilloscope using a BNC cable.

Set:

VERTICAL MODE	CH1
Input Coupling	
CH1 and CH2	1 MΩ DC
VOLTS/DIV	
CH1 and CH2	50 mV
CH1 and CH2 VAR	In detent
A and B SEC/DIV	200 μs (knobs locked)
A and B SEC/DIV VAR	In detent
TRIGGER	
MODE	AUTO
SOURCE	VERT
COUPLING	NOISE REJ
HOLDOFF	In detent
SLOPE	+ (plus)
LEVEL	Stably triggered display
Δt	**Δt readout**
Δ REF OR DLY POS	1000.0 μs readout
INTENSITY	Midrange
READOUT INTENSITY	Minimum (once Δt readout is set)

All other control settings are irrelevant.

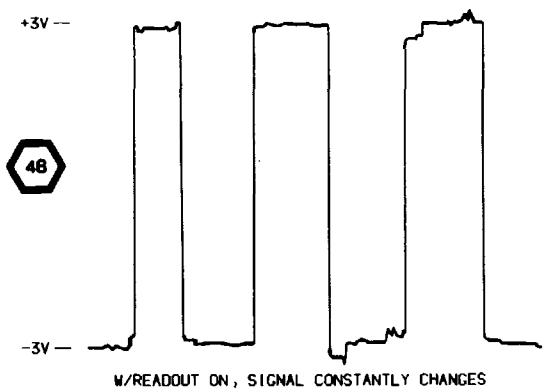

W/READOUT ON, SIGNAL CONSTANTLY CHANGES

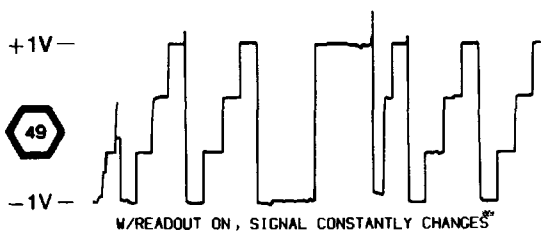

W/READOUT ON, SIGNAL CONSTANTLY CHANGES

TEST OSCILLOSCOPE SETUP

Using a X10 probe with the test oscilloscope, set its Trigger Slope, Trigger Level, Volts/Div and Time/Div ranges as required to obtain the indicated displays.

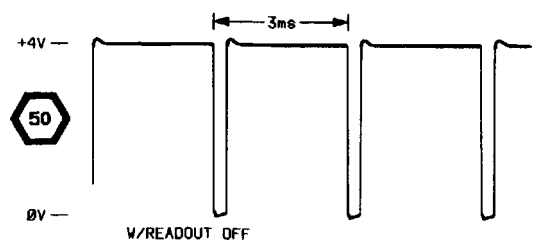

W/READOUT OFF

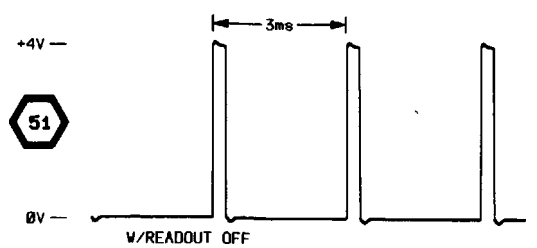

W/READOUT OFF

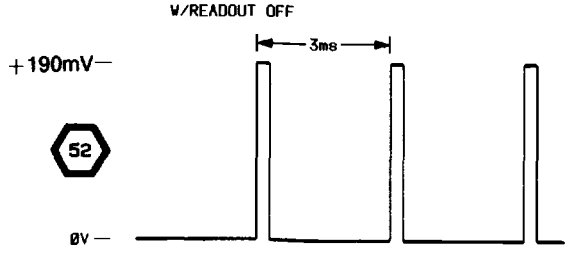

(52 MAY LOOK LIKE 53) W/READOUT OFF

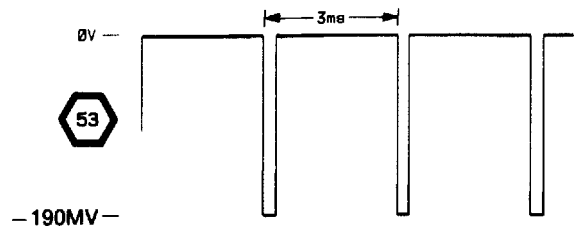

W/READOUT OFF (53 MAY LOOK LIKE 52)

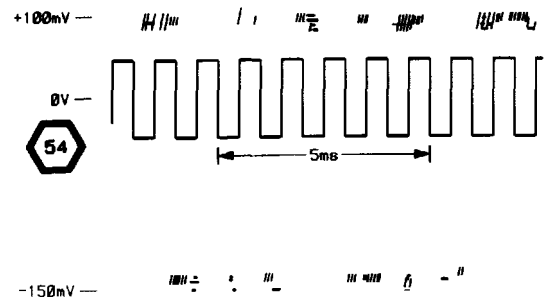

VARIES W/READOUT AND VERTICAL POSITION

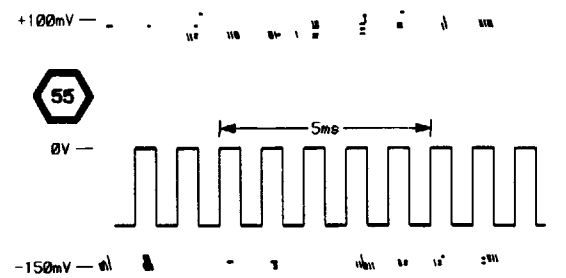

VARIES W/READOUT AND VERTICAL POSITION

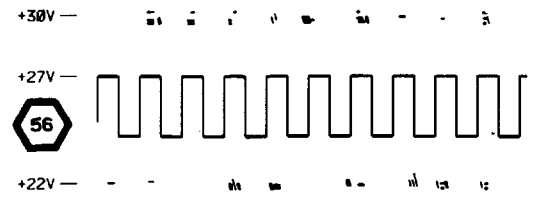

VARIES W/READOUT AND VERTICAL POSITION

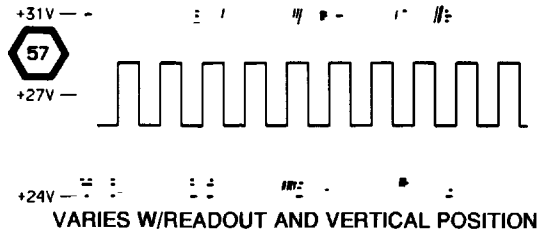

VARIES W/READOUT AND VERTICAL POSITION

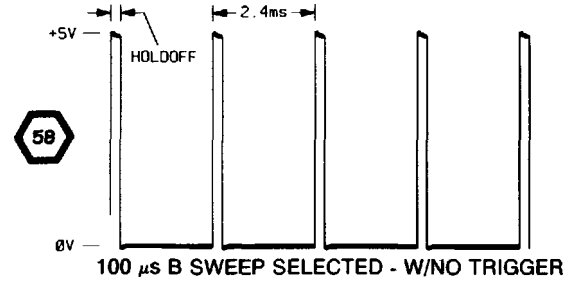

100 μs B SWEEP SELECTED - W/NO TRIGGER

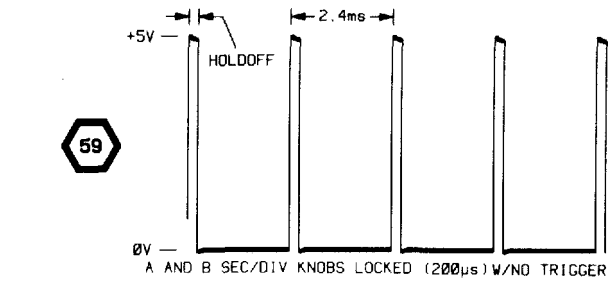

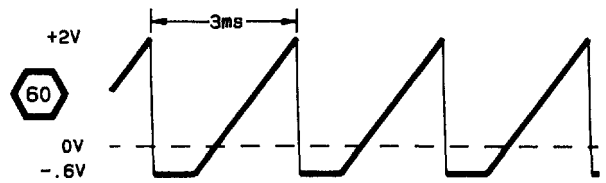

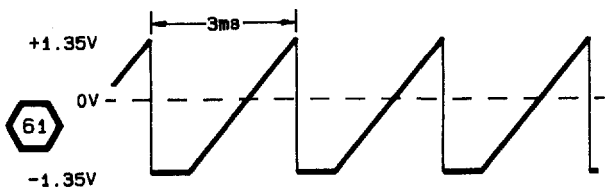

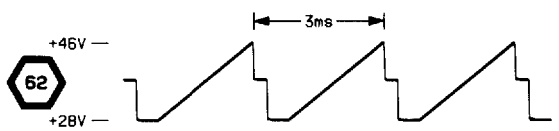

VARIES W/HORIZONTAL POSITION

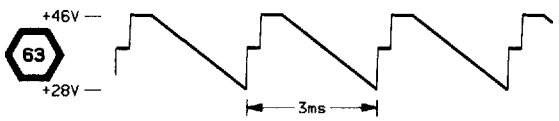

VARIES W/HORIZONTAL POSITION

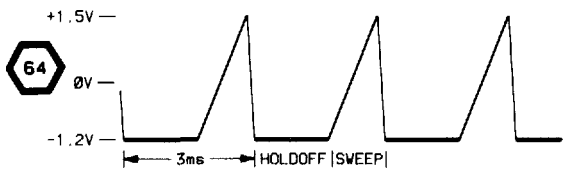

B SWEEP 100 µS

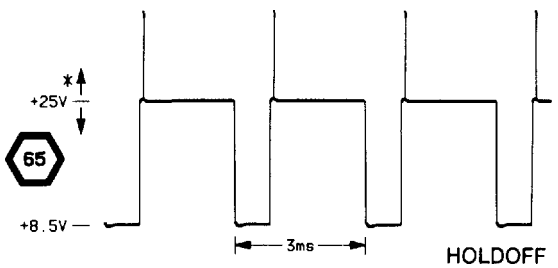

AMPLITUDE VARIES W/INTENSITY
A AND B SWEEP 200 µS, DLY 0.0 READOUT OFF

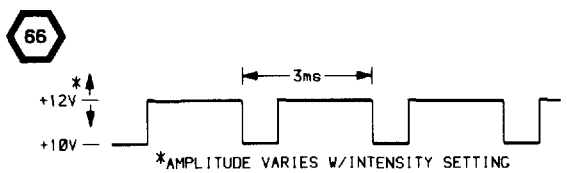

A SWEEP 200 µS

6863-39

2467B CHANNEL SWITCH AND OUTPUT AMPLIFIERS 6

CIRCUIT NUMBER	SCHEM LOCATION	BOARD LOCATION	CIRCUIT NUMBER	SCHEM LOCATION	BOARD LOCATION	CIRCUIT NUMBER	SCHEM LOCATION	BOARD LOCATION	CIRCUIT NUMBER	SCHEM LOCATION	BOARD LOCATION
ASSEMBLY A1											
C402	3F	6F	J411	2A	1K	R486	2C	4M	R817	5C	7F
C403	2H	5J	J411	4A	1K	R487	2C	4M	R820	5K	6F
C404	2J	5J	J411	9N	1K	R488	2C	4M	R821	5K	7E
C412	2F	5F	J511	4A	1D	R489	2B	3M	R822	5B	7E
C478	3E	4L	J511	5A	1D	R490	1C	4K	R823	5K	9E
C487	2C	4M	J512	10N	1H	R491	1E	3K	R850	5J	10G
C488	2C	3M	J512	4N	1H	R492	2E	3L	R855	6K	7F
C601	2K	5J	J512	9A	1H	R493	2E	3L	R856	6L	10E
C617	4L	6G	J512	9N	1H	R494	2D	3L	R858	6K	10E
C625	1M	7G				R495	2F	4K	R860	6K	10D
C735	6H	8E	L403	2H	5J	R496	1D	3L	R903	7L	7K
C803	6L	9G	L605	2L	6J	R497	1C	7L	R949	9K	11K
C804	6M	9G	L606	2K	6K	R498	4D	5K	R956	8K	8L
C805	7M	9G	L607	2K	6H	R501	10B	1K	R957	8L	8K
C806	5M	8F	L608	2L	6H	R600	4M	7K	R972	9N	10L
C808	5M	8G	L609	2K	6J	R601	2K	5J	R973	9M	10L
C809	5M	8G	L610	2K	6H	R602	2L	5J	R995	9B	8L
C817	5C	8F	L619	4M	7K	R605	2L	5J			
C822	5B	9E	L619	4M	7H	R606	2K	6J	S615	4K	10B
C823	5K	6E	L628	3N	8J	R607	2K	6H			
C957	8K	8L	L633	2N	8J	R614	4H	8F	TP800	2B	3L
C972	9N	10L	L644	3N	6K	R615	4K	10B			
C995	9B	8L				R617	4L	6G	U400	1F	6F
			Q600	4J	5K	R618	4L	6H	U475A	3D	5L
CR476	3E	4K	Q623	1M	7H	R619	4M	7H	U475B	3D	5L
CR484	4D	4L	Q624	1L	7H	R620	4N	8H	U475C	1D	5L
CR485	2C	4M				R622	4L	7H	U475D	3E	5L
CR495	2E	3L	R401	3F	6F	R623	1L	7H	U485A	2D	4L
CR600	4J	7K	R402	3F	6F	R624	1M	7G	U485B	2D	4L
CR601	3N	7K	R403	2J	5J	R637	3L	8K	U485C	1C	4L
CR616	4H	7L	R404	3J	5J	R638	3L	7K	U485D	1C	4L
CR619	4M	7G	R405	2J	6J	R639	3J	7K	U600	1L	6J
CR620	3N	8H	R411	2H	6J	R642	4J	5K	U735A	5J	9F
CR621	3N	8H	R412	2F	5F	R650	4J	5K	U735B	6H	9F
CR956	9L	8L	R416	2F	4F	R658	4K	8K	U735C	6H	9F
CR966	8M	10L	R417	2F	4G	R659	3K	7K	U735D	6H	9F
CR972	9M	10L	R470	2C	4M	R731	5H	8E	U735E	6H	9F
CR995	9B	8L	R471	4D	4M	R732	6H	9E	U800	4M	9F
			R476	3F	4K	R733	6J	9F	U860B	6K	7F
DL100	1G	6L	R477	3E	3K	R734	6J	9F	U860C	8B	7F
DL100	1G	6F	R478	3E	4K	R735	6H	8F	U950	7M	8K
			R479	2E	5K	R800	7L	9G			
E900	6N	9G	R480	2D	3K	R801	7K	9G	W106	9A	8M
			R481	3D	4L	R802	5L	9G	W141	3K	10G
J191	8K	10K	R482	3D	4L	R804	6M	9G	W500	9B	1K
J191	8N	10K	R483	2D	4L	R805	6M	9G	W610	2K	5H
J191	9A	10K	R484	4D	4L	R806	7M	9G	W918	6N	8G
J411	10A	1K	R485	1C	4M	R809	6M	8G	W919	6N	9G
Partial A1 also shown on diagrams 4, 5, 8, 11, and 12.											
ASSEMBLY A9											
P191	8K	4B	R4335	8J	1D	R4340	8J	1D	R4351	8J	1E
Partial A9 also shown on diagrams 8 and 12.											
OTHER PARTS											
J6	9A	CHASSIS	P106	9A	CHASSIS	W918 W917	2N 3N	CHASSIS CHASSIS			

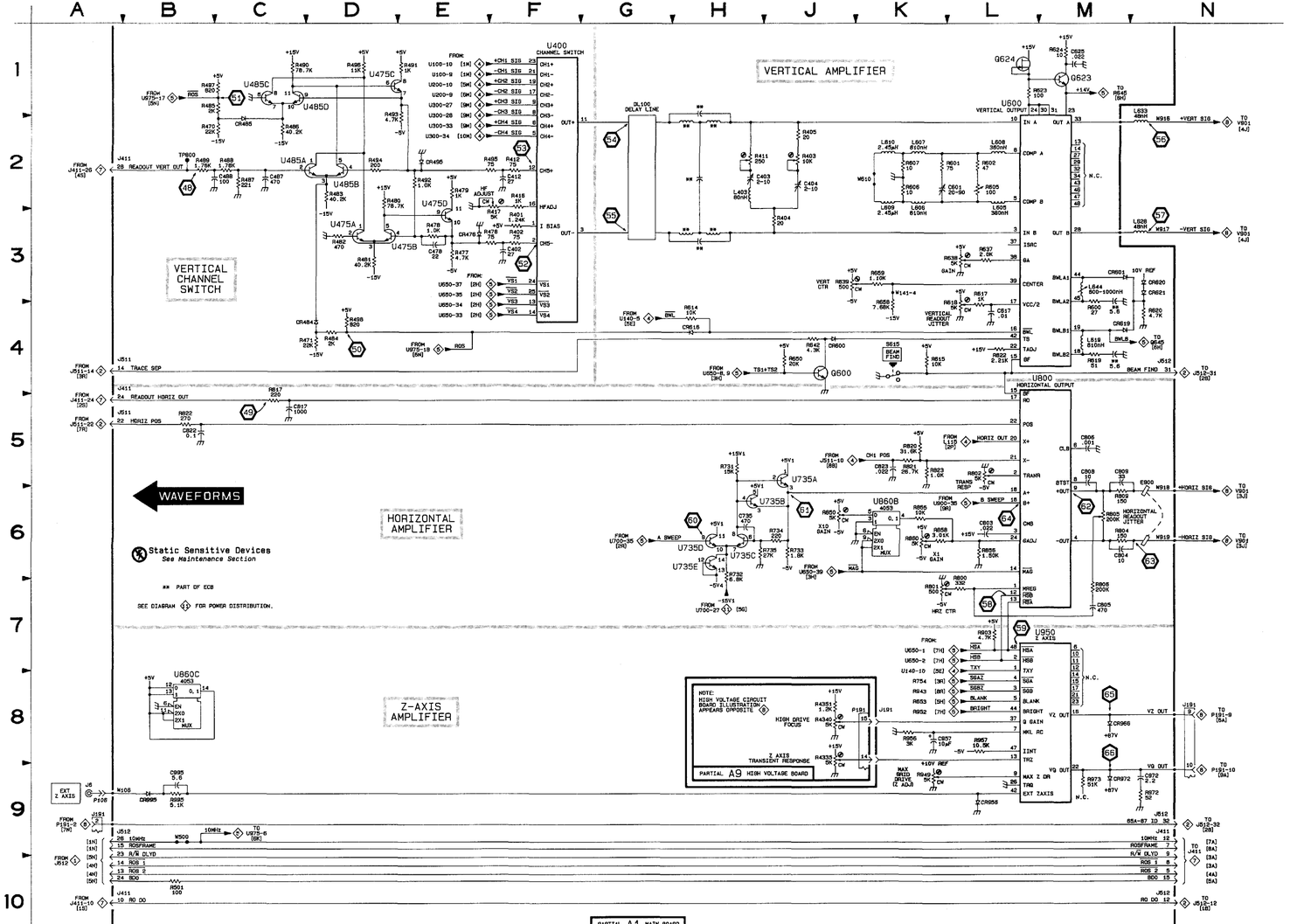

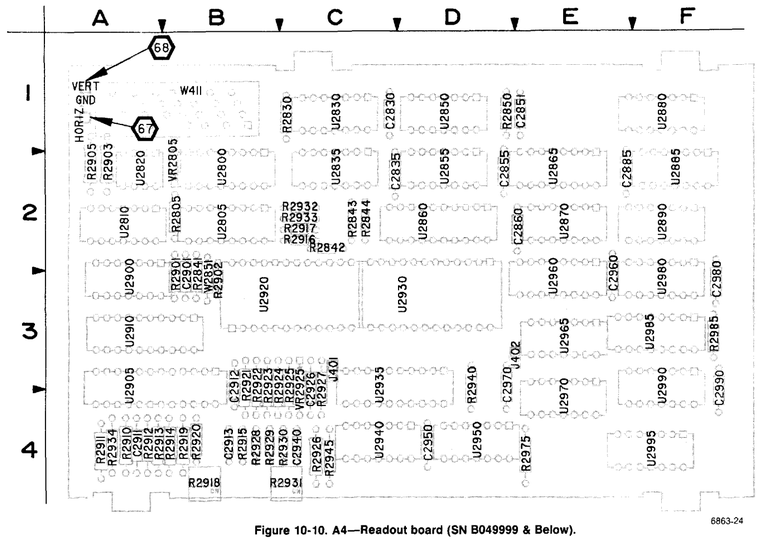

Figure 10-10. A4—Readout board (SN B049999 & Below).

Static Sensitive Devices
See Maintenance Section

COMPONENT NUMBER EXAMPLE

Component Number

A23 A2 R1234

Assembly Number — Subassembly Number (if used) — Schematic Circuit Number

Chassis-mounted components have no Assembly Number prefix—see end of Replaceable Electrical Parts List

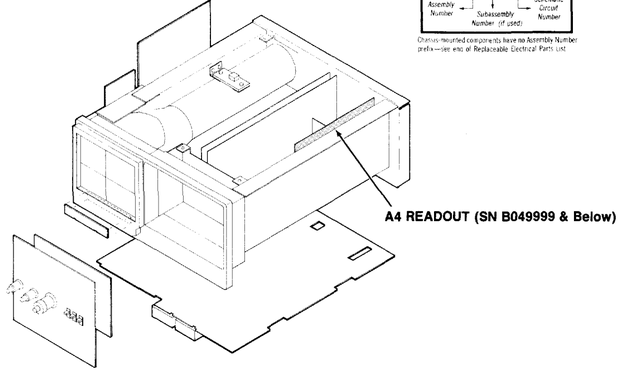

A4—READOUT BOARD (SN B049999 & BELOW)

CIRCUIT NUMBER	SCHEM NUMBER	CIRCUIT NUMBER	SCHEM NUMBER	CIRCUIT NUMBER	SCHEM NUMBER	CIRCUIT NUMBER	SCHEM NUMBER
C2830	12	R2910	7	U2805	7	U2920	7
C2835	12	R2911	7	U2805	12	U2920	12
C2851	12	R2912	7	U2810	7	U2930	7
C2855	12	R2913	7	U2810	12	U2930	12
C2860	12	R2914	7	U2820	7	U2935	7
C2885	12	R2915	7	U2820	12	U2935	12
C2901	12	R2916	7	U2830	7	U2940	7
C2911	7	R2917	7	U2830	12	U2940	12
C2912	12	R2918	7	U2835	7	U2950	7
C2913	12	R2919	7	U2835	12	U2950	12
C2926	12	R2920	7	U2850	7	U2960	7
C2940	12	R2921	7	U2850	12	U2960	12
C2950	12	R2922	7	U2855	7	U2965	7
C2960	12	R2923	7	U2855	12	U2965	12
C2970	12	R2924	7	U2860	7	U2970	7
C2980	12	R2925	7	U2860	12	U2970	12
C2990	12	R2926	7	U2865	7	U2980	7
		R2927	7	U2865	12	U2980	12
J401	7	R2928	7	U2870	7	U2985	7
J402	7	R2929	7	U2870	12	U2985	12
		R2930	7	U2880	7	U2990	7
R2805	12	R2931	7	U2880	12	U2990	12
R2830	7	R2932	7	U2885	7	U2995	7
R2841	7	R2933	7	U2885	12	U2995	12
R2842	7	R2934	7	U2890	7		
R2843	7	R2940	7	U2890	12	VR2805	12
R2844	7	R2945	7	U2900	7	VR2925	7
R2850	7	R2975	7	U2900	12		
R2901	7	R2985	7	U2905	7	W411	7
R2902	7			U2905	12	W411	12
R2903	7	U2800	7	U2910	7	W2851	7
R2905	7	U2800	12	U2910	12		

TEST WAVEFORM SETUP INFORMATION

The numbered waveforms below were obtained at the test points indicated on the accompanying schematic diagram and board dolly. The waveforms are representative of signals that may be expected at the associated points when the indicated setup conditions are observed.

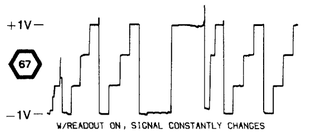

SAME AS 49

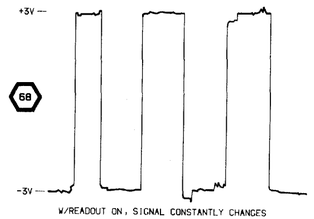

SAME AS 48

6019-23

A4—READOUT BD & WAVEFORMS (SN B049999 & BELOW) FIG. 10-10

READOUT 7
(SN B050000 & ABOVE)

CIRCUIT NUMBER	SCHEM LOCATION	BOARD LOCATION	CIRCUIT NUMBER	SCHEM LOCATION	BOARD LOCATION	CIRCUIT NUMBER	SCHEM LOCATION	BOARD LOCATION	CIRCUIT NUMBER	SCHEM LOCATION	BOARD LOCATION
ASSEMBLY A5											
C2911	2J	2H	R2925	3L	3K	TP31	8M	2H	U2890C	6F	1K
			R2926	4M	3K	TP32	6L	2K	U2890D	6G	1K
J411	1A	4K	R2927	3K	3J	TP33	7R	2K	U2900B	5L	3K
J411	1R	4K	R2928	3J	3J				U2900C	5L	3K
			R2929	3K	3J	U2800	4N	3K	U2905	4J	3K
Q2805	4K	3J	R2930	4J	3J	U2805	2N	2K	U2910	1K	2H
			R2931	4M	3K	U2810A	6L	2K	U2920	1F	1H
R2830	7B	4K	R2932	5E	1G	U2810B	5L	2K	U2930	4H	3H
R2865	4C	1G	R2933	5E	1G	U2810C	5M	2K	U2935	1D	1H
R2866	4B	1G	R2934	4L	3K	U2810D	5M	2K	U2940	1B	1H
R2885	7R	1K	R2935	4L	3K	U2820A	3K	3J	U2950A	8J	2K
R2890	6L	2K	R2960	5B	2H	U2820B	5P	3J	U2950B	7D	2K
R2902	4G	3H	R2961	3B	2H	U2820C	2P	3J	U2960	3D	2H
R2903	5P	3J	R2995	8M	2H	U2820D	3J	3J	U2965A	8G	1K
R2904	5P	3J				U2830	7B	2K	U2965B	8H	1K
R2905	5P	3J	TP10	2C	2J	U2835A	3E	2J	U2965C	8K	1K
R2906	5P	3J	TP11	2C	3H	U2835B	5E	2J	U2965D	8K	1K
R2907	3L	3K	TP12	2C	1H	U2835C	8G	2J	U2970A	7F	2K
R2907	4L	3K	TP13	4G	3H	U2835D	5G	2J	U2970B	7F	2K
R2908	1J	2H	TP14	7C	2K	U2850A	8C	2J	U2970C	7H	2K
R2909	2J	2H	TP15	4H	4K	U2850B	8D	2J	U2970D	7H	2K
R2910	2J	2H	TP16	5H	3H	U2855A	5E	1G	U2975A	5F	2H
R2911	1J	3H	TP17	5H	4K	U2855B	3E	1G	U2975B	4E	2H
R2912	2K	2H	TP18	5H	4J	U2855C	3E	1G	U2975C	4C	2H
R2913	3L	2H	TP19	5H	4J	U2855D	1B	1G	U2975D	2F	2H
R2914	2K	2H	TP20	5K	3K	U2860	3F	2J	U2980A	7N	1J
R2915	3L	2H	TP21	7E	2J	U2865	5D	1G	U2980B	7N	1J
R2916	5E	1G	TP22	7E	2K	U2870	5F	1G	U2980C	7P	1J
R2917	8E	1G	TP23	8E	2J	U2875A	4J	2J	U2980D	7M	1J
R2918	4M	4K	TP24	8E	2J	U2880A	7P	1J	U2985	7E	2J
R2919	4M	3K	TP25	8E	2J	U2880B	7J	1J	U2990A	7E	1J
R2920	4L	3K	TP26	8E	2K	U2885A	7P	1J	U2990B	8G	1J
R2921	5L	3K	TP27	5M	3K	U2885B	9G	1J	U2990C	8M	1J
R2922	4L	4K	TP28	5M	3K	U2885C	7J	1J	U2990D	7M	1J
R2923	4L	3K	TP29	4N	3K	U2890A	7B	1K	U2995	7L	1H
R2924	4L	3K	TP30	6G	2K	U2890B	6K	1K			

Patrial A5 also shown on diagrams 1, 2, and 12.

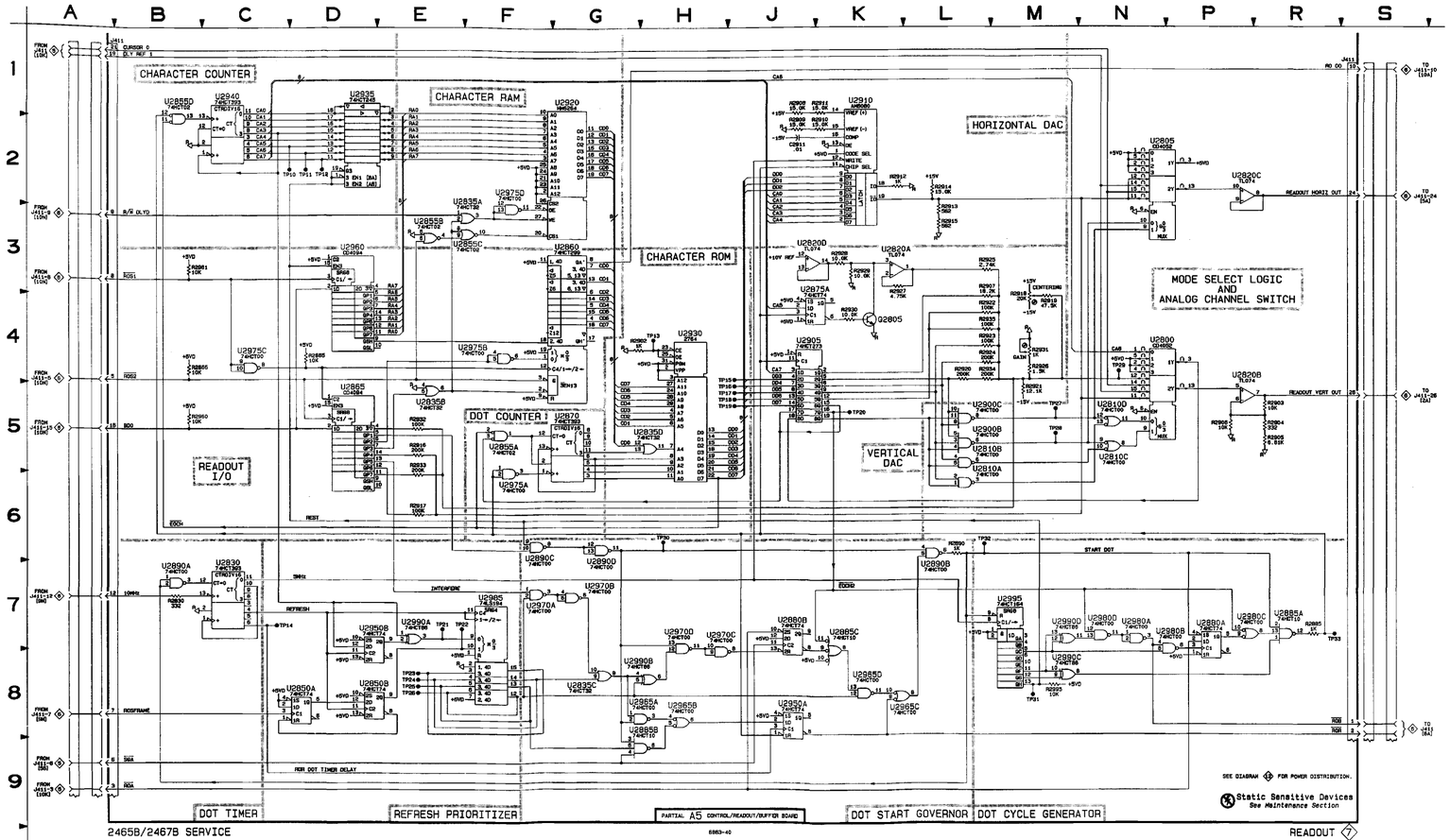

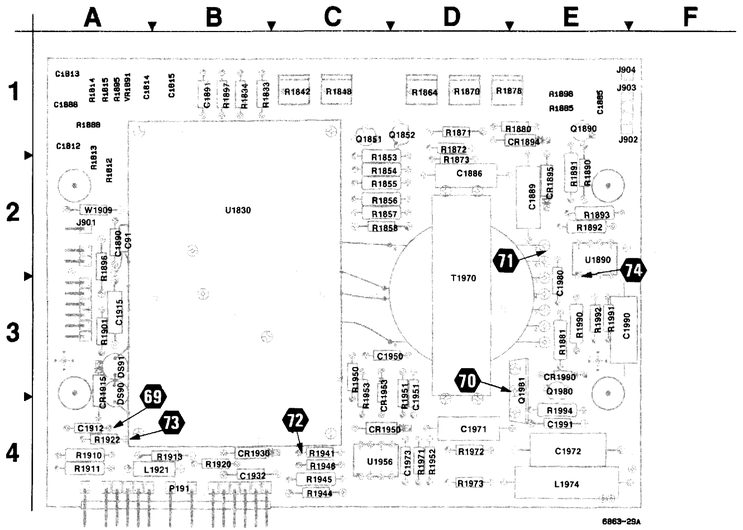

Figure 10-11. A9—2465B High Voltage board.

A9—HIGH VOLTAGE BOARD (2465B)

CIRCUIT NUMBER	SCHEM NUMBER	CIRCUIT NUMBER	SCHEM NUMBER	CIRCUIT NUMBER	SCHEM NUMBER	CIRCUIT NUMBER	SCHEM NUMBER	CIRCUIT NUMBER	SCHEM NUMBER
C91	8	CR1894	8			R1872	8	R1950	8
C1812	8	CR1895	8	Q1851	8	R1873	8	R1951	8
C1813	8	CR1915	8	Q1852	8	R1878	8	R1952	8
C1814	8	CR1930	8	Q1890	8	R1880	8	R1953	8
C1815	8	CR1950	8	Q1980	8	R1881	8	R1971	8
C1870	8	CR1953	8	Q1981	8	R1885	8	R1972	8
C1885	8	CR1990	8			R1888	8	R1973	8
C1886	8			R1812	8	R1890	8	R1990	8
C1888	8	DS90	8	R1813	8	R1891	8	R1991	8
C1889	8	DS91	8	R1814	8	R1892	8	R1992	8
C1890	8			R1815	8	R1893	8	R1994	8
C1891	8	F1900	8	R1833	6	R1895	8		
C1912	8			R1834	6	R1896	8	T1970	8
C1915	8	J901	8	R1842	6	R1897	8		
C1932	8	J902	8	R1848	8	R1898	8	U1830	8
C1950	8	J903	8	R1853	8	R1901	8	U1890	8
C1951	8	J904	8	R1854	8	R1910	8	U1890	12
C1971	8			R1855	8	R1911	8	U1956	8
C1972	8	L1921	8	R1856	8	R1913	8	U1956	12
C1973	8	L1974	8	R1857	8	R1920	8		
C1980	8			R1858	8	R1922	8	VR1891	8
C1990	8	P191	6	R1864	8	R1941	8		
C1991	8	P191	8	R1870	8	R1944	8	W1909	12
		P191	12	R1871	8	R1945	8		

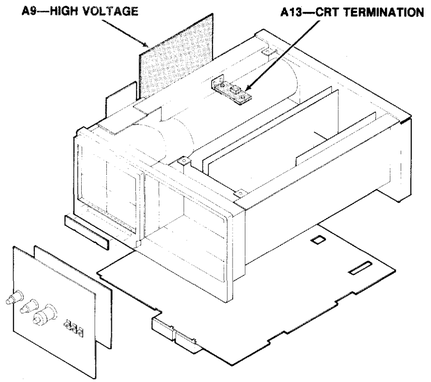

Static Sensitive Devices
See Maintenance Section

COMPONENT NUMBER EXAMPLE

Component Number

A23 A2 R1234

Assembly Number — *Subassembly Number (if used)* — *Schematic Circuit Number*

Chassis mounted components have no Assembly Number prefix—see end of Replaceable Electrical Parts List

A13—CRT TERMINATION BOARD

CIRCUIT NUMBER	SCHEM NUMBER	CIRCUIT NUMBER	SCHEM NUMBER
J904	8	R1501	8

TEST WAVEFORM SETUP INFORMATION

The numbered waveforms below were obtained at the test points indicated on the accompanying schematic diagram and board dolly. The waveforms are representative of signals that may be expected at the associated points whenever the instrument is running.

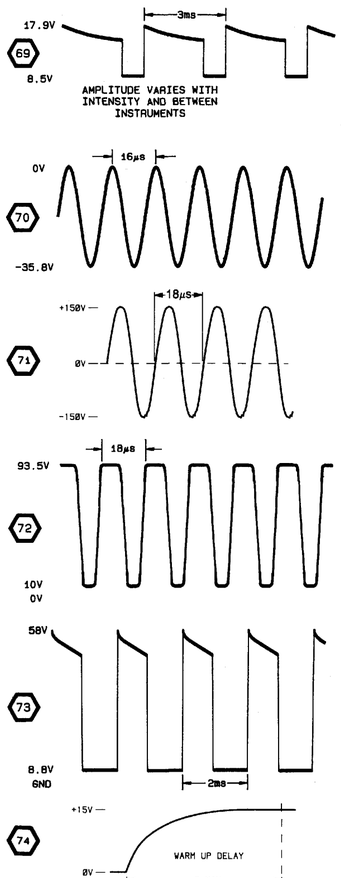

6019-21

A9—HIGH VOLTAGE BD (2465B) & WAVEFORMS FIG. 10-11

READOUT 7
(SN B049999 & BELOW)

CIRCUIT NUMBER	SCHEM LOCATION	BOARD LOCATION	CIRCUIT NUMBER	SCHEM LOCATION	BOARD LOCATION	CIRCUIT NUMBER	SCHEM LOCATION	BOARD LOCATION	CIRCUIT NUMBER	SCHEM LOCATION	BOARD LOCATION
ASSEMBLY A4											
C2911	2H	4A	R2923	4K	3B	U2835C	7F	2C	U2940	1C	4C
			R2924	4K	3B	U2835D	2E	2C	U2950A	7D	4D
J401	4G	3C	R2925	3K	3C	U2850A	7C	1D	U2950B	8H	4D
J402	5G	3D	R2926*	4K	4C	U2850B	7D	1D	U2960	3D	3E
			R2927	4G	3C	U2855A	1B	2D	U2965A	4C	3E
R2830	7B	1B	R2928	3J	4B	U2855B	5E	2D	U2965B	8G	3E
R2841	5K	3B	R2929	3J	4B	U2855C	3E	2D	U2965C	4E	3E
R2842	3B	2C	R2930	3K	4B	U2855D	3E	2D	U2970A	7L	4E
R2843	3B	2C	R2931*	4K	4B	U2860	3F	2D	U2970B	7G	4E
R2844	4B	2C	R2932	5D	2C	U2865	4D	2E	U2970C	6G	4E
R2850	7C	1D	R2933	5D	2C	U2870	5F	2E	U2970D	7F	4E
R2901	4K	3B	R2934	5J	4A	U2880A	7H	1F	U2980A	8G	3F
R2902	2E	3B	R2940	7D	3D	U2880B	7M	1F	U2980B	7N	3F
R2903	5N	2A	R2945	2B	4C	U2885A	8G	2F	U2980C	7M	3F
R2905	5N	2A	R2975	7L	4D	U2885B	7J	2F	U2980D	5E	3F
R2910	1H	4A	R2985	7E	3F	U2885C	7N	2F	U2985	7E	3E
R2911	1H	4A				U2890A	6B	2F	U2990A	7D	3F
R2912	2J	4A	U2800	4M	2B	U2890B	8J	2F	U2990B	7G	3F
R2913	2K	4A	U2805	2M	2B	U2890C	6K	2F	U2990C	7L	3F
R2914	2K	4B	U2810A	5J	2A	U2890D	7J	2F	U2990D	7L	3F
R2915	3K	4B	U2810B	5J	2A	U2900A	2E	3A	U2995	7K	4E
R2916	5D	2C	U2810C	5M	2A	U2900B	4J	3A			
R2917	5D	2C	U2810D	5M	2A	U2900C	5J	3A	VR2925	3K	3C
R2918	4L	4B	U2820A	4N	2A	U2905	4H	3A			
R2919	4L	4B	U2820B	2N	2A	U2910	1J	3A	W411	8P	1B
R2920	4K	4B	U2830	6B	1C	U2920	1F	3B	W411	9A	1B
R2921	4K	3B	U2835A	5F	2C	U2930	4G	2D	W2851	2D	3B
R2922	4K	3B	U2835B	4D	2C	U2935	1D	3C			
Patrial A4 also shown on diagram 12.											
OTHER PARTS											
P411	1A	CHASSIS	P411	1P	CHASSIS						

***See Part List for serial number ranges.**

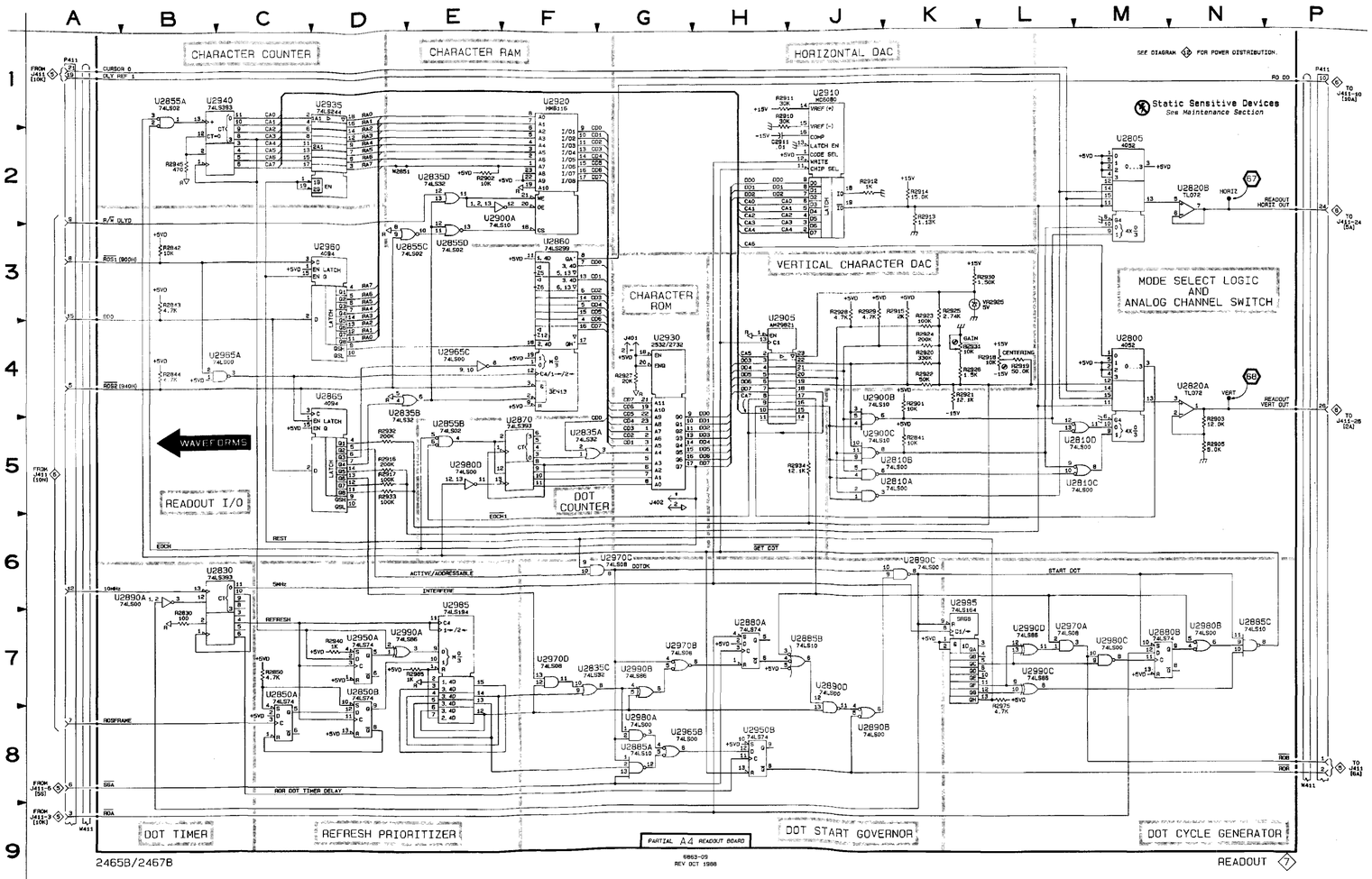

READOUT
(SN B049999 & BELOW)

7

2465B HIGH VOLTAGE SUPPLY AND CRT 8

CIRCUIT NUMBER	SCHEM LOCATION	BOARD LOCATION	CIRCUIT NUMBER	SCHEM LOCATION	BOARD LOCATION	CIRCUIT NUMBER	SCHEM LOCATION	BOARD LOCATION	CIRCUIT NUMBER	SCHEM LOCATION	BOARD LOCATION
ASSEMBLY A1											
C975	2C	9B	J120	2C	8A	J191	2D	10K			
Patrial A1 also shown on diagrams 4, 5, 6, and 11.											
ASSEMBLY A9											
C91	9H	2A				R1848	4G	1C	R1922	7F	4A
C1812	5F	1A	DS90	8J	3A	R1853	5E	1D	R1941	8F	4C
C1813	6F	1A	DS91	8J	3A	R1854	6E	2D	R1944	7E	4C
C1814	5F	1B				R1855	5D	2D	R1945	6E	4C
C1815	6F	1B	F1900	9B	1E	R1858	5E	2D	R1950	8D	3C
C1885	4G	1E				R1857	5E	2D	R1951	7B	3D
C1886	8D	2D	J901	3H	2A	R1858	5E	2D	R1952	7C	4D
C1888	3G	1A	J901	5H	2A	R1864	3E	1D	R1953	8D	3C
C1889	8C	2E	J901	6L	2A	R1870	3G	1D	R1971	6C	4D
C1890	3G	2A	J902	2H	1F	R1871	5E	1D	R1972	6E	4D
C1891	3G	1B	J903	4H	1F	R1872	6E	1D	R1973	7E	4D
C1912	6M	4A	J904	5N	1F	R1873	3E	1D	R1990	4E	3E
C1915	7F	3A				R1878	8E	1E	R1991	8D	3E
C1932	7E	4B	L1921	7M	4B	R1880	4G	1E	R1992	9E	3E
C1950	8D	3D	L1974	9B	4E	R1881	8E	3E	R1994	8F	4E
C1951	7B	3D				R1885	3G	1E			
C1971	8F	4D	P191	2D	4B	R1888	4G	1A	T1970	8C	3D
C1972	9B	4E	P191	3L	4B	R1890	4F	2E			
C1973	6D	4D	P191	7A	4B	R1891	4F	2E	U1830	6G	2B
C1980	8B	3E				R1892	4E	2E	U1890A	8D	2E
C1990	9D	3F	Q1851	5E	1C	R1893	3E	2E	U1890B	3F	2E
C1991	8F	4E	Q1852	5E	1D	R1895	3F	1A	U1890	4M	2E
			Q1890	4G	1E	R1896	3G	2A	U1956A	7E	4C
CR1894	8C	1E	Q1980	8F	3E	R1897	3G	1B	U1956B	7D	4C
CR1895	8C	2E	Q1981	8B	3E	R1898	4H	1E	U1956	4M	4C
CR1915	7F	3A				R1901	6H	3A			
CR1930	8E	4B	R1812	5F	1A	R1910	6M	4A	VR1891	3F	1A
CR1950	8F	4D	R1813	6F	1A	R1911	6M	4A			
CR1953	8D	3D	R1814	5F	1A	R1913	7E	4B	W1909	4M	2A
CR1990	8E	3E	R1815	6F	1A	R1920	7E	4B			
Patrial A9 also shown on diagram 8.											
ASSEMBLY A13											
J904	5M	5M	R1501	5L	5L						
OTHER PARTS											
LR1513	5L	CHASSIS	P901	6L	CHASSIS	R977	5A	CHASSIS	W900	7H	CHASSIS
LR1514	5L	CHASSIS	P902	2H	CHASSIS				W901	5H	CHASSIS
			P903	4H	CHASSIS	V900	1K	CHASSIS	W902	2H	CHASSIS
P120	2B	CHASSIS							W903	4H	CHASSIS
P901	3H	CHASSIS	R975	2A	CHASSIS	W900	3H	CHASSIS			
P901	5H	CHASSIS	R976	5A	CHASSIS	W900	6L	CHASSIS			

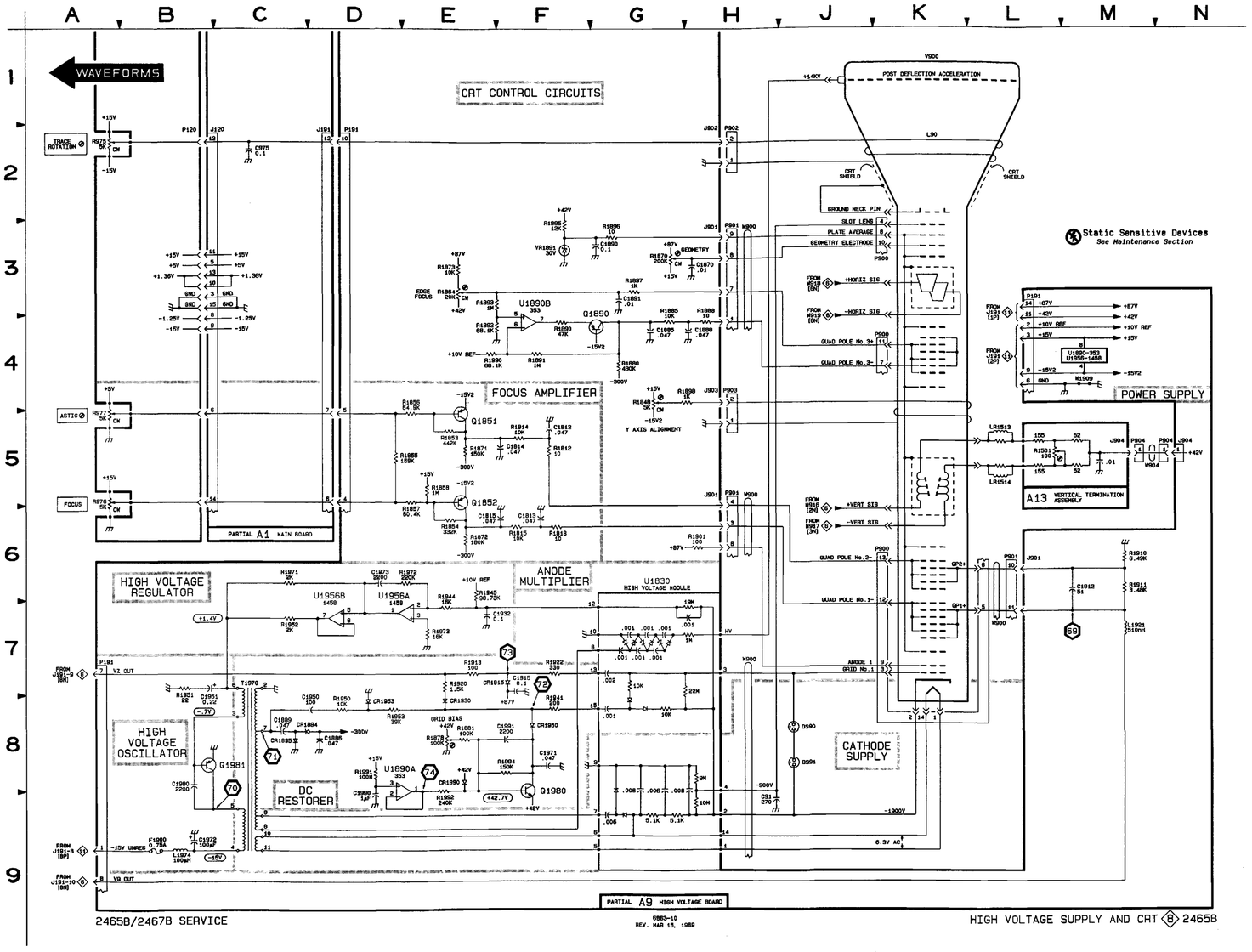

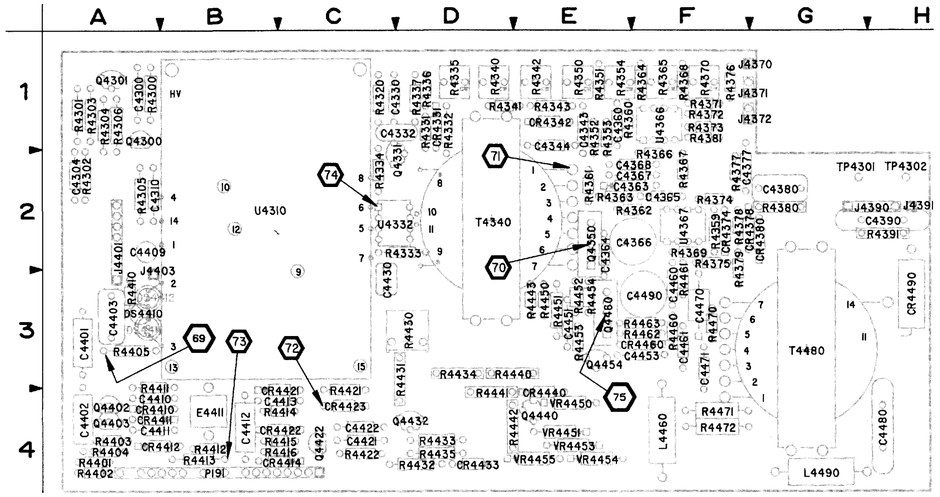

Figure 10-12. A9—2467B High Voltage board.

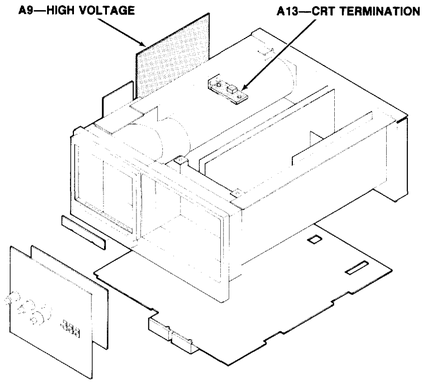

Static Sensitive Devices
See Maintenance Section

COMPONENT NUMBER EXAMPLE

Component Number
A23 A2 R1234
Assembly Number — Subassembly Number (if used) — Schematic Circuit Number

Chassis-mounted components have no Assembly Number prefix—see end of Replaceable Electrical Parts List

A9—HIGH VOLTAGE BOARD (2467B)

CIRCUIT NUMBER	SCHEM NUMBER	CIRCUIT NUMBER	SCHEM NUMBER	CIRCUIT NUMBER	SCHEM NUMBER	CIRCUIT NUMBER	SCHEM NUMBER	CIRCUIT NUMBER	SCHEM NUMBER
C4300	8	CR4374	8	Q4331	8	R4363	8	R4434	8
C4304	8	CR4378	8	Q4350	8	R4364	8	R4435	8
C4310	8	CR4380	8	Q4402	8	R4365	8	R4440	8
C4330	8	CR4410	8	Q4403	8	R4366	8	R4441	8
C4332	8	CR4411	8	Q4422	8	R4367	8	R4442	8
C4343	8	CR4412	8	Q4432	8	R4368	8	R4443	8
C4344	8	CR4414	12	Q4440	8	R4369	8	R4450	8
C4360	8	CR4421	8	Q4454	8	R4370	8	R4451	8
C4363	8	CR4422	8	Q4460	8	R4371	8	R4452	8
C4364	8	CR4423	8			R4372	8	R4453	8
C4365	8	CR4433	8	R4300	8	R4373	8	R4454	8
C4366	8	CR4440	8	R4301	8	R4374	8	R4460	8
C4367	12	CR4460	8	R4302	8	R4375	8	R4461	8
C4368	12	CR4490	8	R4303	8	R4376	8	R4462	8
C4377	8			R4304	8	R4377	8	R4463	8
C4380	8	DS4410	8	R4305	8	R4378	8	R4470	8
C4390	8	DS4411	8	R4306	8	R4379	8	R4471	8
C4401	8	DS4412	8	R4320	8	R4380	8	R4472	8
C4402	12			R4331	8	R4381	8		
C4403	8	E4411	8	R4332	8	R4391	8	T4340	8
C4409	8			R4333	8	R4401	8	T4480	8
C4410	8	J4370	8	R4334	8	R4402	12		
C4411	8	J4371	8	R4335	6	R4403	8	TP4301	8
C4412	8	J4372	8	R4336	8	R4404	8	TP4302	8
C4413	8	J4390	8	R4337	8	R4405	8		
C4421	8	J4391	8	R4340	6	R4410	8	U4310	8
C4422	8	J4401	8	R4341	8	R4411	8	U4332	8
C4430	8	J4403	8	R4342	8	R4412	8	U4332	12
C4451	8			R4343	8	R4413	8	U4366	8
C4453	8	L4460	8	R4350	8	R4414	8	U4366	12
C4460	8	L4490	8	R4351	6	R4415	8	U4367	8
C4461	8			R4352	8	R4416	8	U4367	12
C4470	8	P191	6	R4353	8	R4421	8		
C4480	8	P191	8	R4354	8	R4422	8	VR4450	8
C4490	8	P191	12	R4359	8	R4430	8	VR4451	8
				R4360	8	R4431	8	VR4453	8
CR4331	8	Q4300	8	R4361	8	R4432	8	VR4454	8
CR4342	8	Q4301	8	R4362	8	R4433	8	VR4455	8

TEST WAVEFORM SETUP INFORMATION

The numbered waveforms below were obtained at the test points indicated on the accompanying schematic diagram and board dolly. The waveforms are representative of signals that may be expected at the associated points whenever the instrument is running.

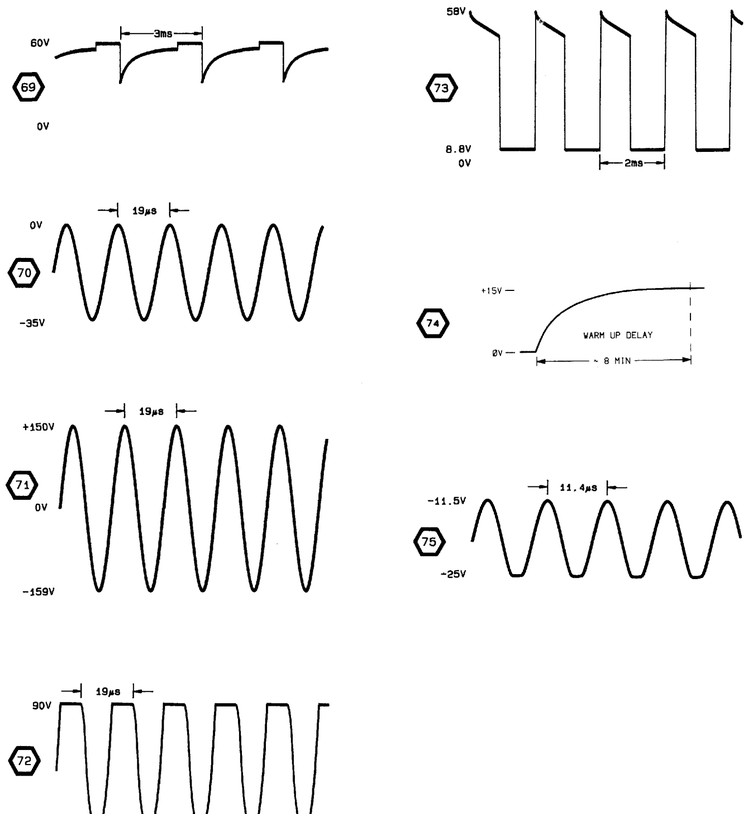

2467B HIGH VOLTAGE SUPPLY AND CRT 8

CIRCUIT NUMBER	SCHEM LOCATION	BOARD LOCATION	CIRCUIT NUMBER	SCHEM LOCATION	BOARD LOCATION	CIRCUIT NUMBER	SCHEM LOCATION	BOARD LOCATION	CIRCUIT NUMBER	SCHEM LOCATION	BOARD LOCATION
ASSEMBLY A1											
C975	1F	9B	J120	1F	8A	J120	9G	8A	J191	3D	10K
			J120	3C	8A	J191	1G	10K	J191	9H	10K
Patrial A1 also shown on diagrams 4, 5, 6, 11, and 12.											
ASSEMBLY A9											
C4300	5F	1A	CR4490	3E	3H	R4331	5E	1D	R4416	9C	4C
C4304	4G	2A				R4332	6E	1D	R4421	6F	4C
C4310	3G	2A	DS4410	7L	3A	R4333	6D	2D	R4422	9C	4C
C4330	3G	1C	DS4411	6H	3A	R4334	4D	2C	R4430	8M	3D
C4332	6E	1D	DS4412	6H	3A	R4336	7E	1D	R4431	9K	3D
C4343	6C	1E				R4337	4E	1D	R4432	8K	4D
C4344	4D	2E	E4411	5D	4B	R4341	6D	1D	R4433	9K	4D
C4360	4C	1E				R4342	3G	1E	R4434	7M	3D
C4363	6B	2F	J4370	3M	1G	R4343	6D	1E	R4435	9K	4D
C4364	7B	2E	J4371	3H	1G	R4350	2G	1E	R4440	7M	3E
C4365	1D	2F	J4372	2H	1G	R4352	4C	1E	R4441	6L	4D
C4366	7B	2F	J4390	1H	2H	R4353	4C	1E	R4442	6L	4D
C4377	2C	2F	J4391	6N	2H	R4354	5C	1E	R4443	3D	3E
C4380	2D	2G	J4401	2H	2A	R4359	2B	2F	R4450	3D	3E
C4390	2E	2H	J4401	3H	2A	R4360	4D	1E	R4451	3E	3E
C4401	8D	3A	J4401	8H	2A	R4361	6B	2E	R4452	4F	3E
C4403	8E	3A	J4403	7L	3A	R4362	1D	2F	R4453	4E	3E
C4409	7L	2A				R4363	6B	2E	R4454	3F	3E
C4410	8D	4A	L4460	7B	4F	R4364	6C	1F	R4460	1B	3F
C4411	9D	4A	L4490	3D	4G	R4365	1C	1F	R4461	1B	3F
C4412	9B	4B				R4366	4C	2F	R4462	4E	3F
C4413	9C	4C	P191	1A	4B	R4367	1D	2F	R4463	4E	3F
C4421	9D	4C	P191	1G	4B	R4368	1C	1F	R4470	2D	3F
C4422	6F	4C	P191	3D	4B	R4369	1B	2F	R4471	2G	4F
C4430	7D	3C	P191	7N	4B	R4370	3G	1F	R4472	6M	4F
C4451	3E	3E	P191	9H	4B	R4371	1C	1F			
C4453	4F	3F				R4372	7C	1F	T4340	6C	2D
C4460	1B	3F	Q4300	5E	1A	R4373	6D	1F	T4480	2E	3G
C4461	2D	3F	Q4301	5E	1A	R4374	1D	2F			
C4470	2D	3F	Q4331	7F	2C	R4375	2D	2F	TP4301	1G	2G
C4480	2G	4H	Q4350	7B	2E	R4376	3G	1F	TP4302	1G	2H
C4490	3D	3F	Q4402	9D	4A	R4377	1C	2F			
			Q4403	8D	4A	R4378	2C	2F	U4310	8G	2B
CR4331	6E	1D	Q4422	9C	4C	R4379	2C	2F	U4332A	6D	2D
CR4342	6D	1E	Q4432	9K	4D	R4380	2C	2G	U4332B	4E	2D
CR4374	2B	2F	Q4440	6M	4E	R4381	1C	1F	U4366A	4C	1F
CR4378	1C	2F	Q4454	4F	3E	R4391	2E	2H	U4366B	6D	1F
CR4380	2C	2G	Q4460	2D	3E	R4401	8D	4A	U4367A	2B	2F
CR4410	9D	4A				R4403	8D	4A	U4367B	1D	2F
CR4411	8D	4A	R4300	5F	1A	R4404	8D	4A			
CR4412	8D	4B	R4301	5E	1A	R4405	9E	3A	VR4450	6M	4E
CR4421	9B	4C	R4302	4G	2A	R4410	8L	3A	VR4451	6M	4E
CR4422	6D	4C	R4303	5E	1A	R4411	8D	4A	VR4453	5M	4E
CR4423	6F	4C	R4304	5E	1A	R4412	8D	4B	VR4454	5M	4E
CR4433	9K	4D	R4305	2G	2A	R4413	6D	4B	VR4455	5M	4E
CR4440	6L	4E	R4306	5E	1A	R4414	9C	4C			
CR4460	4E	3F	R4320	3G	1C	4415	9C	4C			
Patrial A9 also shown on diagrams 6 and 12.											
OTHER PARTS											
J904	3M	CHASSIS							R1501	3L	CHASSIS
			P120	1F	CHASSIS	R975	1E	CHASSIS			
LR1513	3L	CHASSIS	P120	3C	CHASSIS	R976	9G	CHASSIS	V901	1K	CHASSIS
LR1514	3L	CHASSIS	P120	9G	CHASSIS	R977	3C	CHASSIS			

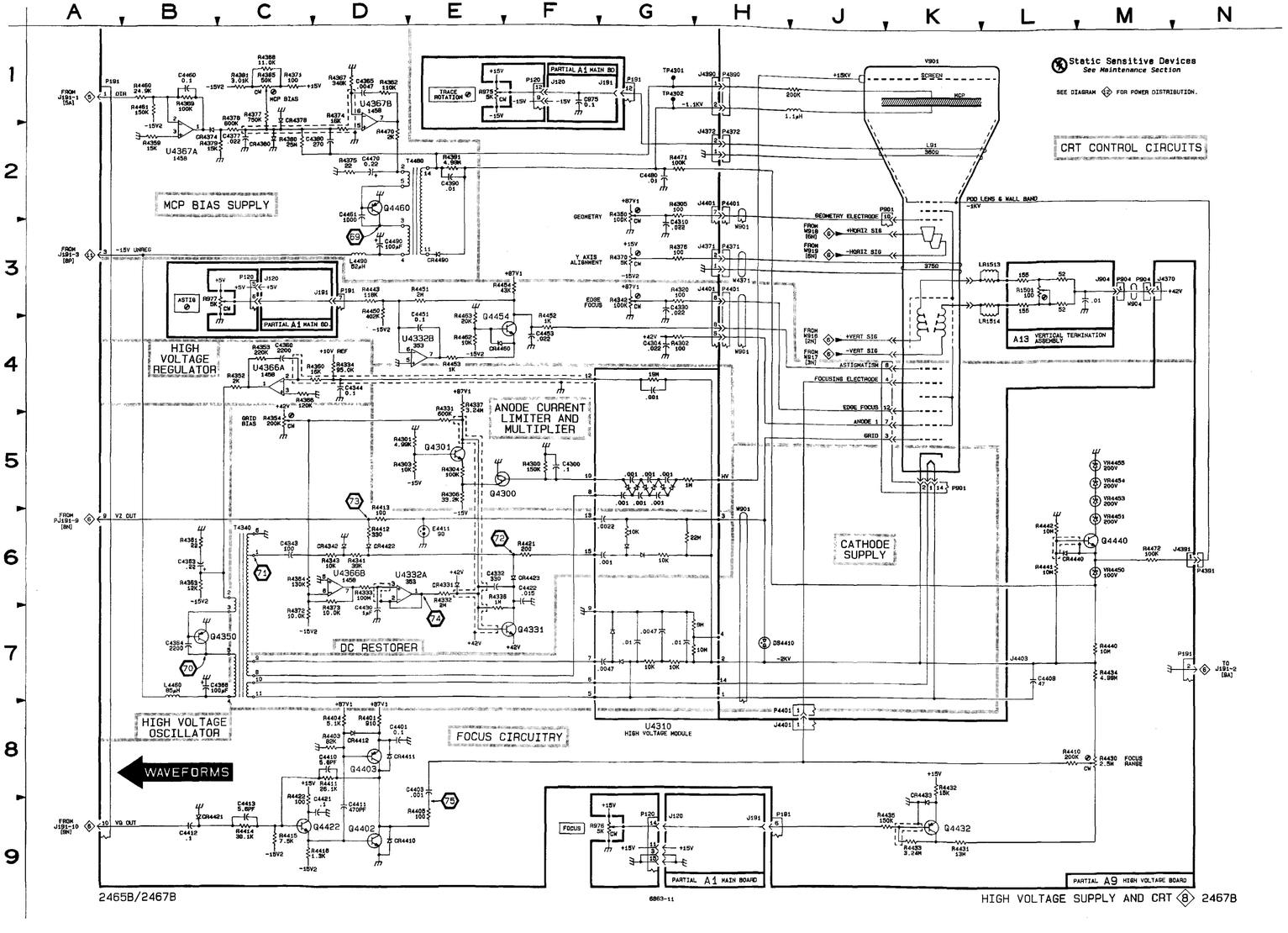

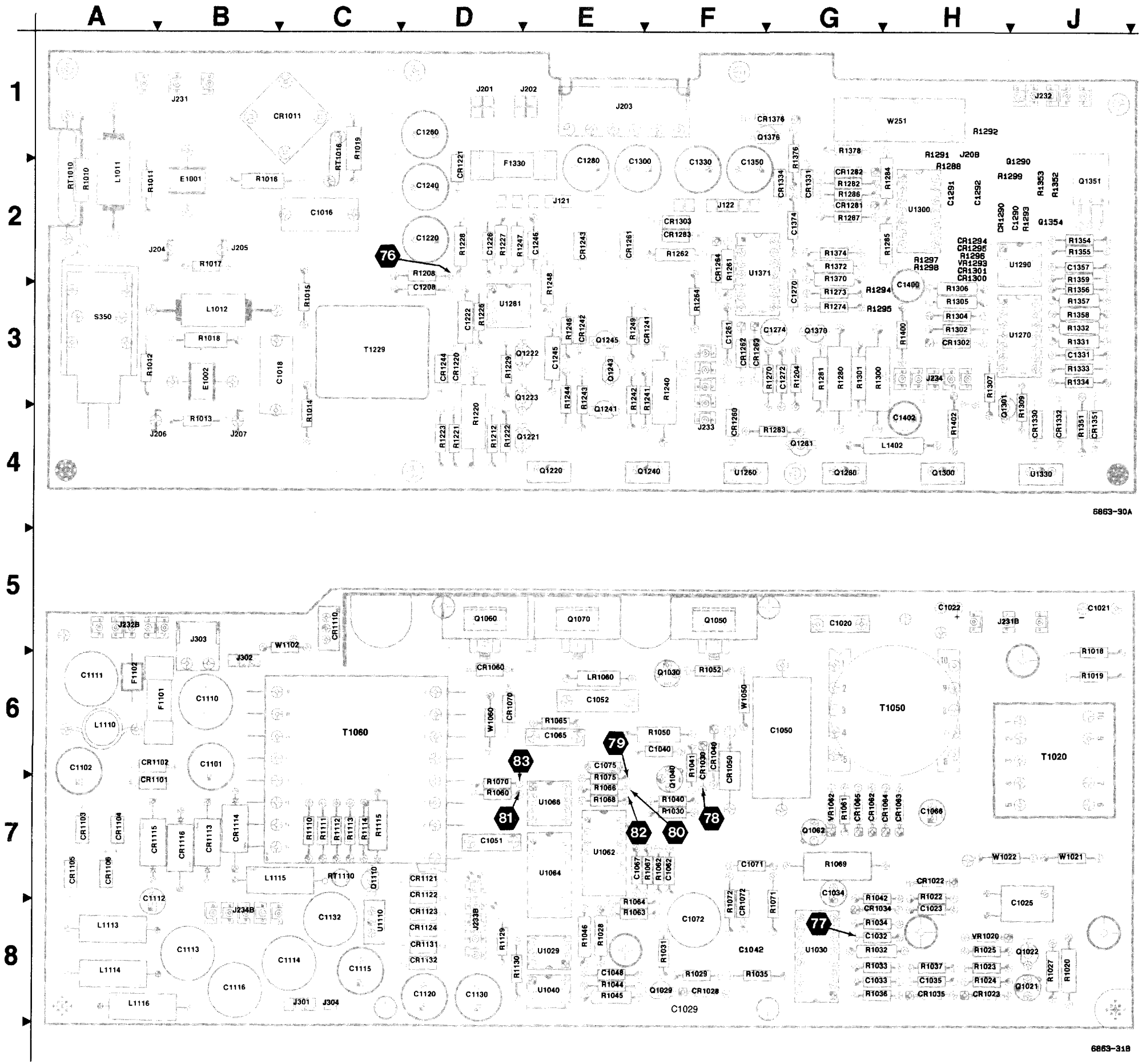

Figure 10-13. A2A1—Regulator and A3—Inverter boards.

-A2A1

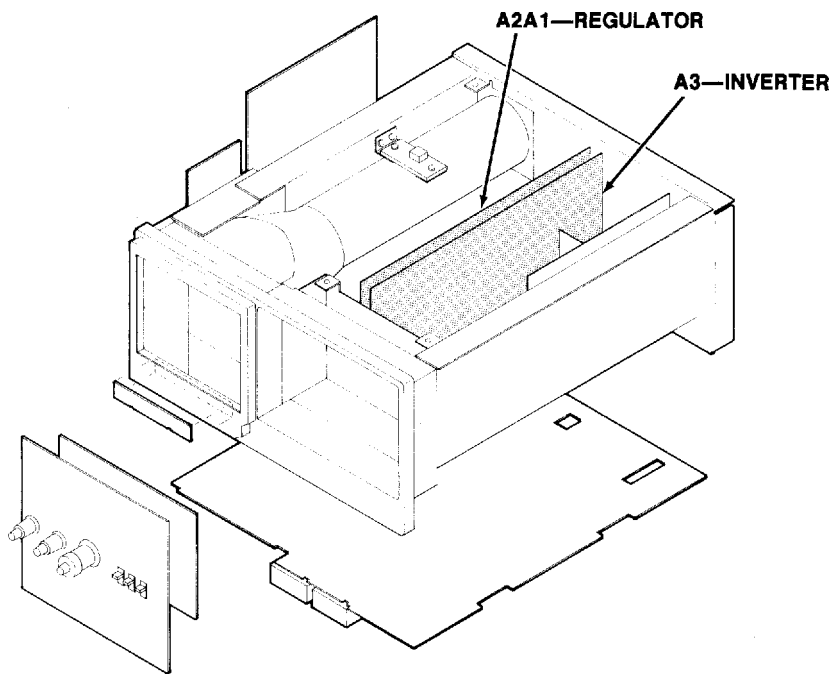

-A 3

A2A1—REGULATOR BOARD

CIRCUIT NUMBER	SCHEM NUMBER	CIRCUIT NUMBER	SCHEM NUMBER	CIRCUIT NUMBER	SCHEM NUMBER	CIRCUIT NUMBER	SCHEM NUMBER
C1016	9	CR1332	10	R1011	9	R1299	10
C1018	9	CR1334	10	R1012	9	R1300	10
C1208	9	CR1351	10	R1013	9	R1301	10
C1220	10	CR1376	10	R1014	9	R1302	10
C1222	10			R1015	9	R1304	10
C1226	10	E1001	9	R1016	9	R1305	10
C1240	10	E1002	9	R1017	9	R1306	10
C1245	10			R1018	9	R1307	10
C1246	10	F1330	10	R1019	9	R1309	10
C1260	10			R1204	10	R1331	10
C1261	10	J121	10	R1208	9	R1332	10
C1270	10	J122	9	R1212	10	R1333	10
C1272	10	J122	10	R1220	10	R1334	10
C1274	10	J201	10	R1221	10	R1351	10
C1280	10	J202	10	R1222	10	R1352	10
C1290	10	J203	10	R1223	10	R1353	10
C1291	10	J204	9	R1226	10	R1354	10
C1292	10	J205	9	R1227	10	R1355	10
C1300	10	J206	9	R1228	10	R1356	10
C1330	10	J207	9	R1229	10	R1357	10
C1331	10	J208	10	R1240	10	R1358	10
C1350	10	J231	9	R1241	10	R1359	10
C1357	10	J232	10	R1242	10	R1370	10
C1374	10	J233	10	R1243	10	R1372	10
C1400	10	J234	10	R1244	10	R1374	10
C1402	10			R1246	10	R1376	10
		L1011	9	R1247	10	R1378	10
CR1011	9	L1012	9	R1248	10	R1400	10
CR1220	10	L1402	10	R1249	10	R1402	10
CR1221	10			R1261	10		
CR1241	10	P208	10	R1262	10	RT1010	9
CR1242	10			R1264	10	RT1016	9
CR1243	10	Q1220	10	R1270	10		
CR1244	10	Q1221	10	R1273	10	S350	9
CR1260	10	Q1222	10	R1274	10		
CR1261	10	Q1223	10	R1280	10	T1229	9
CR1262	10	Q1240	10	R1281	10		
CR1263	10	Q1241	10	R1282	10	TP201	10
CR1264	10	Q1243	10	R1283	10		
CR1281	10	Q1245	10	R1284	10	U1260	10
CR1282	10	Q1280	10	R1285	10	U1270	10
CR1283	10	Q1281	10	R1286	10	U1281	10
CR1290	10	Q1290	10	R1287	10	U1290	10
CR1294	10	Q1300	10	R1291	10	U1300	10
CR1295	10	Q1301	10	R1292	10	U1330	10
CR1300	10	Q1351	10	R1293	10	U1371	10
CR1301	10	Q1354	10	R1294	10		
CR1302	10	Q1370	10	R1295	10	VR1293	10
CR1303	10	Q1376	10	R1296	10		
CR1330	10			R1297	10	W251	10
CR1331	10	R1010	9	R1298	10		

Static Sensitive Devices
See Maintenance Section

COMPONENT NUMBER EXAMPLE

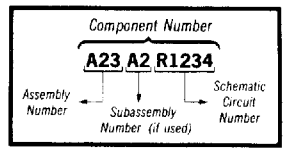

Chassis-mounted components have no Assembly Number prefix—see end of Replaceable Electrical Parts List.

A3—INVERTER BOARD

CIRCUIT NUMBER	SCHEM NUMBER	CIRCUIT NUMBER	SCHEM NUMBER	CIRCUIT NUMBER	SCHEM NUMBER	CIRCUIT NUMBER	SCHEM NUMBER
C1020	9	CR1050	9			R1063	9
C1021	9	CR1060	9	LR1060	9	R1064	9
C1022	9	CR1062	9			R1065	9
C1023	9	CR1063	9	Q1021	9	R1066	9
C1025	9	CR1064	9	Q1022	9	R1067	9
C1029	9	CR1065	9	Q1029	9	R1068	9
C1032	9	CR1070	9	Q1030	9	R1069	9
C1033	9	CR1072	9	Q1040	9	R1070	9
C1034	9	CR1101	9	Q1050	9	R1071	9
C1035	9	CR1102	9	Q1060	9	R1072	9
C1040	9	CR1103	9	Q1062	9	R1075	9
C1042	9	CR1104	9	Q1070	9	R1110	9
C1048	9	CR1105	9	Q1110	9	R1111	9
C1050	9	CR1106	9			R1112	9
C1051	9	CR1110	9	R1018	9	R1113	9
C1052	9	CR1113	9	R1019	9	R1114	9
C1062	9	CR1114	9	R1020	9	R1115	9
C1065	9	CR1115	9	R1022	9	R1129	9
C1066	9	CR1116	9	R1023	9	R1130	9
C1067	9	CR1121	9	R1024	9		
C1071	9	CR1122	9	R1025	9	RT1110	9
C1072	9	CR1123	9	R1027	9		
C1075	9	CR1124	9	R1028	9	T1020	9
C1101	9	CR1131	9	R1029	9	T1050	9
C1102	9	CR1132	9	R1030	9	T1060	9
C1110	9			R1031	9		
C1111	9	F1101	9	R1032	9	U1029	9
C1112	9	F1102	9	R1033	9	U1030	9
C1113	9			R1034	9	U1040	9
C1114	9	J231	9	R1035	9	U1062	9
C1115	9	J232	9	R1036	9	U1064	9
C1116	9	J233	9	R1037	9	U1066	9
C1120	9	J234	9	R1040	9	U1110	9
C1130	9	J301	9	R1041	9		
C1132	9	J302	9	R1042	9	VR1020	9
		J303	9	R1044	9	VR1062	9
CR1022	9	J304	9	R1045	9		
CR1023	9			R1046	9	W1021	9
CR1028	9	L1110	9	R1050	9	W1022	9
CR1030	9	L1113	9	R1052	9	W1050	9
CR1034	9	L1114	9	R1060	9	W1060	9
CR1035	9	L1115	9	R1061	9	W1101	9
CR1040	9	L1116	9	R1062	9	W1102	9

TEST WAVEFORM SETUP INFORMATION

The numbered waveforms below were obtained at the test points indicated on the accompanying schematic diagram and board dolly. The waveforms are representative of signals that may be expected at the associated points whenever the instrument is running.

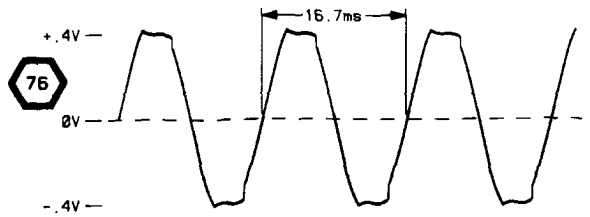

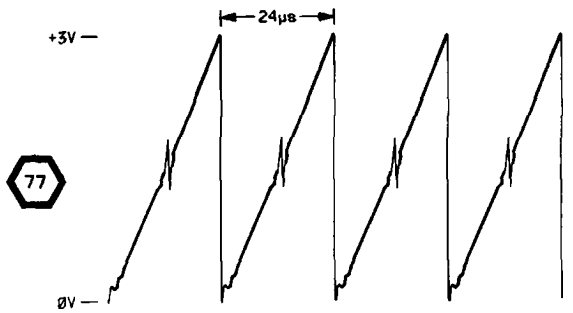

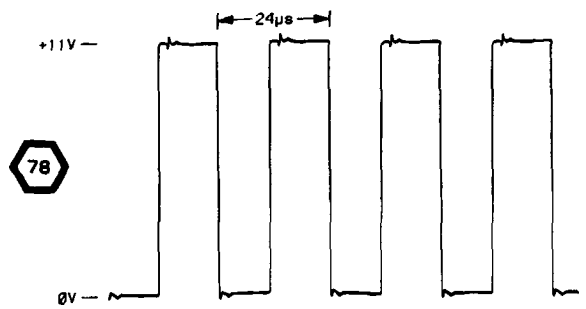

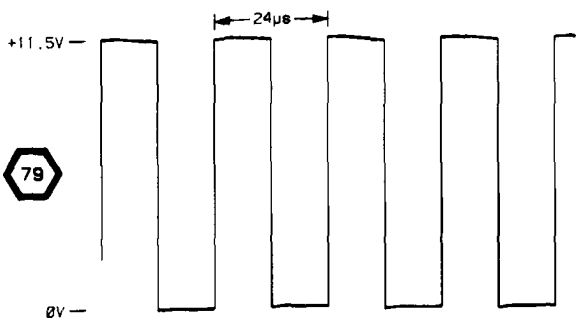

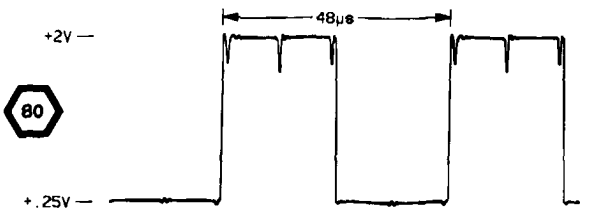

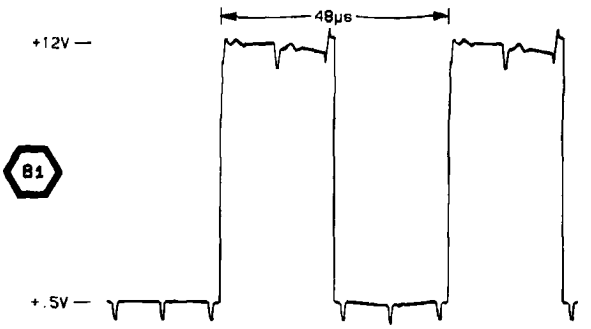

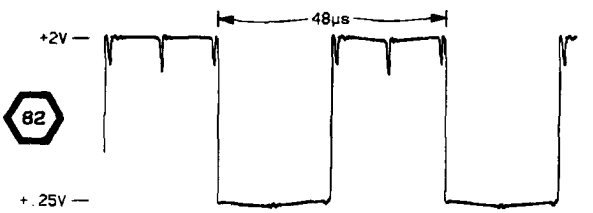

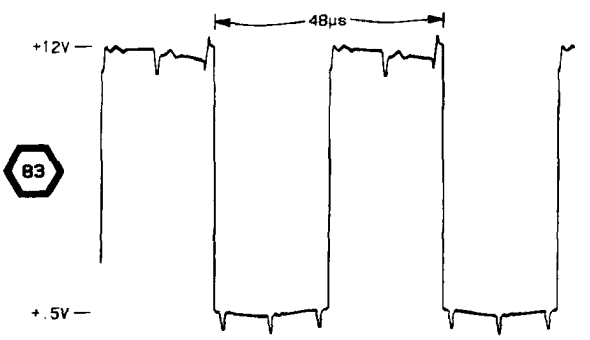

6019-24

LOW-VOLTAGE POWER SUPPLY AND FAN CIRCUIT 9

CIRCUIT NUMBER	SCHEM LOCATION	BOARD LOCATION	CIRCUIT NUMBER	SCHEM LOCATION	BOARD LOCATION	CIRCUIT NUMBER	SCHEM LOCATION	BOARD LOCATION	CIRCUIT NUMBER	SCHEM LOCATION	BOARD LOCATION
ASSEMBLY A2											
C1018	6D	2C	J204	5B	2B	R1011	5C	2A	RT1010	5C	2A
C1018	6C	3C	J205	6B	2B	R1012	6C	3A	RT1016	6D	1C
C1208	3C	3D	J206	6B	4B	R1013	6C	4B			
			J207	6B	4B	R1014	3C	4C	S350	5B	3A
CR1011	5D	1C	J231A	5D	1B	R1015	3C	3C			
						R1016	6D	2B	T1229	3C	3C
E1001	6C	2B	L1011	5C	2A	R1017	6B	2B			
E1002	6D	3B	L1012	6C	3B	R1018	6C	3B			
						R1019	6D	1C			
J122	3D	2F	R1010	5C	2A	R1208	3C	2D			

Patrial A2 also shown on diagram 10.

CIRCUIT NUMBER	SCHEM LOCATION	BOARD LOCATION	CIRCUIT NUMBER	SCHEM LOCATION	BOARD LOCATION	CIRCUIT NUMBER	SCHEM LOCATION	BOARD LOCATION	CIRCUIT NUMBER	SCHEM LOCATION	BOARD LOCATION
ASSEMBLY A3											
C1020	4E	5G	CR1062	7F	7H	Q1029	3N	8F	R1071	6H	7G
C1021	7E	5J	CR1063	7G	7H	Q1030	6H	6F	R1072	6H	7F
C1022	5E	5H	CR1064	7F	7H	Q1040	6J	6F	R1075	8G	6E
C1023	4G	7H	CR1065	7G	7G	Q1050	6G	5F	R1110	2M	7C
C1025	3F	7J	CR1070	7L	6E	Q1060	8K	5D	R1111	2M	7C
C1029	4N	8F	CR1072	6G	8F	Q1062	7H	7G	R1112	2M	7C
C1032	4L	8H	CR1101	9M	6B	Q1070	9K	8E	R1113	2L	7C
C1033	5L	8H	CR1102	9M	6B	Q1110	2L	7C	R1114	2L	7C
C1034	3L	7G	CR1103	8N	7A				R1115	1L	7C
C1035	5L	8H	CR1104	8N	7A	R1018	7E	5J	R1129	4N	8D
C1040	8J	8F	CR1105	7N	7A	R1019	8E	8J	R1130	4N	8E
C1042	4J	8F	CR1106	7N	7A	R1020	5F	8J			
C1048	4M	8E	CR1110	7M	5C	R1022	3G	7H	RT1110	2M	7C
C1050	6G	5G	CR1113	8M	7B	R1023	3G	8H			
C1051	6F	7D	CR1114	8M	7B	R1024	3H	8H	T1020	8E	6J
C1052	6G	6E	CR1115	7M	7B	R1025	3G	8H	T1050	6F	6H
C1062	9F	7F	CR1116	7M	7B	R1027	3M	8J	T1060	6L	6C
C1065	8L	6E	CR1121	6M	7D	R1028	3M	8E			
C1066	8G	7H	CR1122	6M	7D	R1029	3N	8F	U1029	3N	8E
C1067	9F	7F	CR1123	6M	8D	R1030	6H	7F	U1030	5K	8G
C1071	6H	7G	CR1124	6M	8D	R1031	4L	8F	U1040	4M	8E
C1072	7J	8F	CR1131	5M	8D	R1032	4L	8H	U1062A	8H	7E
C1075	8J	6E	CR1132	5M	8D	R1033	5L	8H	U1062B	9H	7E
C1101	9M	6B				R1034	3L	7H	U1062C	9F	7E
C1102	9M	6A	F1101	8N	6B	R1035	4L	8G	U1062D	9G	7E
C1110	9M	6B	F1102	9N	6A	R1036	5L	8H	U1062	8H	7E
C1111	9M	6A				R1037	4L	8H	U1064A	9G	7E
C1112	8N	7B	J231B	5E	5J	R1040	6H	6F	U1064B	9G	7E
C1112	8N	7B	J232B	9P	5A	R1041	6H	6F	U1064	8H	7E
C1113	8N	8B	J233B	4P	8D	R1042	3H	7H	U1066A	8J	7E
C1114	8N	8C	J234B	7P	8B	R1044	4M	8E	U1066B	9J	7E
C1115	7N	8C	J301	6P	8C	R1045	4M	8E	U1066	8J	7E
C1116	7N	8B	J302	6P	5B	R1046	5M	8E	U1110	1L	7C
C1120	6M	8D	J303	8P	5B	R1050	6H	6F			
C1130	5M	8D	J304	1N	8C	R1052	6G	6F	VR1020	4G	8H
C1132	5M	8C				R1060	8K	7D	VR1062	7G	7G
			L1110	9M	6A	R1061	7G	7G			
CR1022	3F	7H	L1113	8N	8A	R1062	8F	7F	W1021	7E	7J
CR1023	3H	8H	L1114	8N	8A	R1063	9F	7F	W1022	6E	7J
CR1028	3N	8F	L1115	7N	7C	R1064	9F	7F	W1050	6G	6F
CR1030	6H	6F	L1116	7N	8A	R1065	6L	6E	W1060	6L	6D
CR1034	4L	7H				R1066	8J	7E	W1101	6N	6C
CR1035	5L	8H	LR1060	8K	8E	R1067	8F	7F	W1102	6N	6C
CR1040	8H	6F				R1068	8J	7E			
CR1050	6G	6F	Q1021	3G	8J	R1069	7H	7G			
CR1060	6L	6D	Q1022	4G	8J	R1070	9K	6D			
OTHER PARTS											
B10	1P	CHASSIS				P231	5E	CHASSIS	S90	6A	CHASSIS
			P204	5B	CHASSIS	P232	9P	CHASSIS	S1020	5E	CHASSIS
C10	1N	CHASSIS	P205	6B	CHASSIS	P233	4P	CHASSIS			
			P206	6B	CHASSIS	P234	7P	CHASSIS			
F90	5A	CHASSIS	P207	6B	CHASSIS						

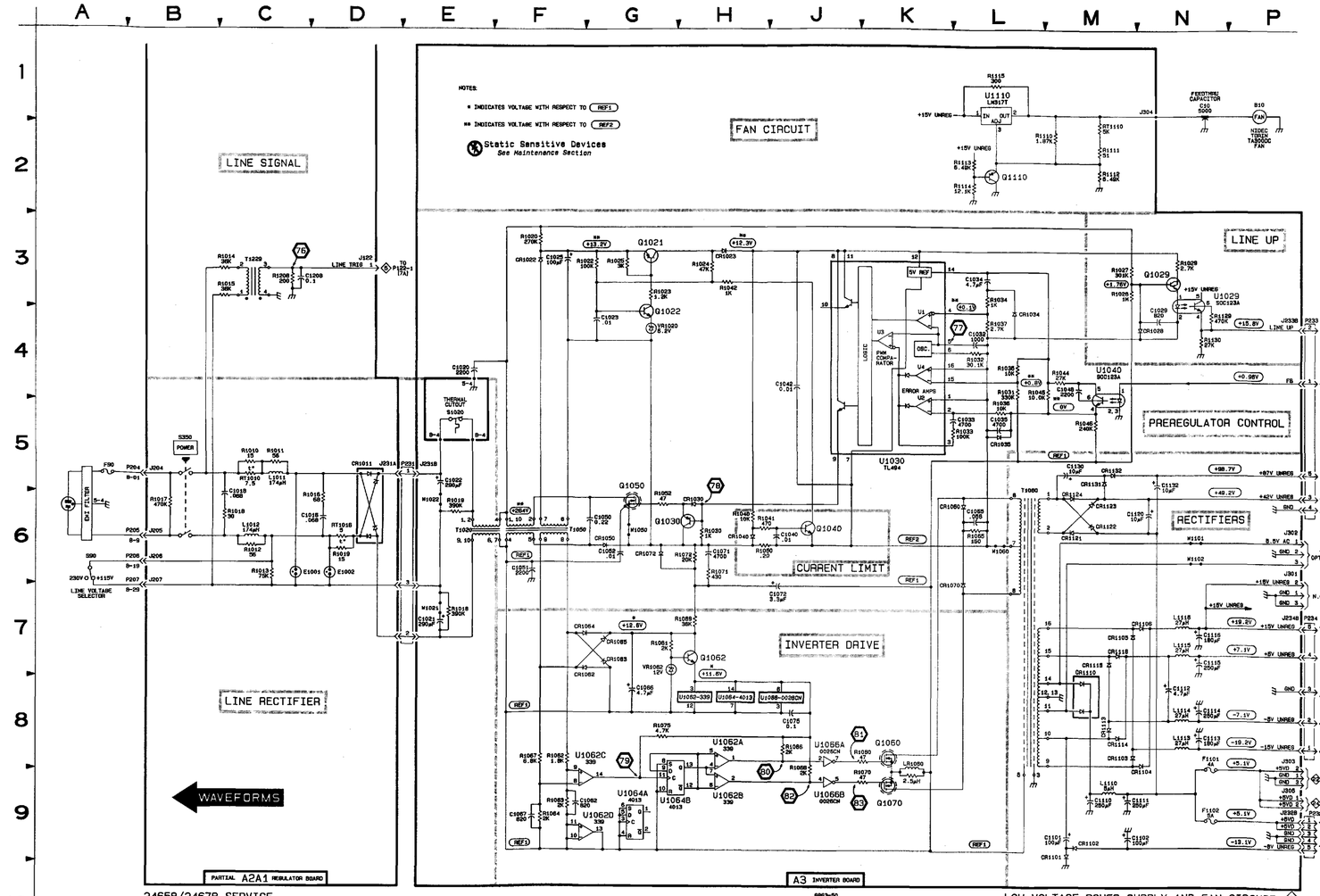

LOW-VOLTAGE POWER SUPPLY AND FAN CIRCUIT (SN B049999 & BELOW) 9

CIRCUIT NUMBER	SCHEM LOCATION	BOARD LOCATION	CIRCUIT NUMBER	SCHEM LOCATION	BOARD LOCATION	CIRCUIT NUMBER	SCHEM LOCATION	BOARD LOCATION	CIRCUIT NUMBER	SCHEM LOCATION	BOARD LOCATION
ASSEMBLY A2											
C1016	6D	2C	J204	5B	2B	R1011	5C	2A	RT1010	5C	2A
C1018	6C	3C	J205	6B	2B	R1012	6C	3A	RT1016	6D	1C
C1208	3C	3D	J206	6B	4B	R1013	6C	4B			
			J207	6B	4B	R1014	3C	4C	S350	5B	3A
CR1011	5D	1C	J231A	5D	1B	R1015	3C	3C			
						R1016	6D	2B	T1229	3C	3C
E1001	6C	2B	L1011	5C	2A	R1017	6B	2B			
E1002	6D	3B	L1012	6C	3B	R1018	6C	3B			
						R1019	6D	1C			
J122	3D	2F	R1010	5C	2A	R1208	3C	2D			
Patrial A2 also shown on diagram 10.											
ASSEMBLY A3											
C1020	4E	5G	CR1062	7F	7H	Q1029	3N	8F	R1071	6H	7G
C1021	7E	5J	CR1063	7G	7H	Q1030	6H	6F	R1072	6H	7F
C1022	5E	5H	CR1064	7F	7H	Q1040	6J	6F	R1075	8G	6E
C1023	4G	7H	CR1065	7G	7G	Q1050	6G	5F	R1110	2M	7C
C1025	3F	7J	CR1070	7L	6E	Q1060	8K	5D	R1111	2M	7C
C1029	4N	8F	CR1072	8G	8F	Q1062	7H	7G	R1112	2M	7C
C1032	4L	8H	CR1101	9M	6B	Q1070	9K	8E	R1113	2L	7C
C1033	5L	8H	CR1102	9M	6B	Q1110	2L	7C	R1114	2L	7C
C1034	3L	7G	CR1103	8N	7A				R1115	1L	7C
C1035	5L	8H	CR1104	8N	7A	R1018	7E	5J	R1129	4N	8D
C1040	6J	6F	CR1105	7N	7A	R1019	9E	6J	R1130	4N	8E
C1042	4J	8F	CR1108	7N	7A	R1020	3F	8J			
C1048	4M	8E	CR1110	7M	5C	R1022	3G	7H	RT1110	2M	7C
C1050	6G	6H	CR1113	8M	7B	R1023	3G	8H			
C1051	6F	7D	CR1114	8M	7B	R1024	3H	8H	T1020	6E	6J
C1052	6G	5E	CR1115	7M	7B	R1025	3G	8H	T1050	6F	6H
C1062	9F	7F	CR1116	7M	7B	R1027	3M	8J	T1060	6L	6C
C1065	6L	8E	CR1121	6M	7D	R1028	3M	8E			
C1066	8G	7H	CR1122	6M	7D	R1029	3N	8F	U1029	3N	8E
C1067	9F	7F	CR1123	6M	8D	R1030	6H	7F	U1030	5K	8G
C1071	5H	7G	CR1124	6M	8D	R1031	4L	8F	U1040	4M	8E
C1072	7J	8F	CR1131	5M	8D	R1032	4L	8H	U1062A	8H	7E
C1075	8J	6E	CR1132	5M	8D	R1033	5L	8H	U1062B	9H	7E
C1101	9M	6B				R1034	3L	7H	U1062C	9F	7E
C1102	9M	6A	F1101	8N	6B	R1035	4L	8G	U1062D	9G	7E
C1110	9M	6B	F1102	9N	6A	R1036	5L	8H	U1062	8H	7E
C1111	9M	6A				R1037	4L	8H	U1064A	9G	7E
C1112	8N	7B	J231B	5E	5J	R1040	6H	6F	U1064B	9G	7E
C1112	8N	7B	J232B	9P	5A	R1041	6H	6F	U1064	8H	7E
C1113	8N	8B	J233B	4P	8D	R1042	3H	7H	U1066A	8J	7E
C1114	8N	8C	J234B	7P	8B	R1044	4M	8E	U1066B	9J	7E
C1115	7N	8C	J301	6P	8C	R1045	4M	8E	U1066	8J	7E
C1116	7N	8B	J302	6P	5B	R1046	5M	8E	U1110	1L	7C
C1120	8M	8D	J303	8P	5B	R1050	8H	6F			
C1130	5M	8D	J304	1N	8C	R1052	6G	6F	VR1020	4G	8H
C1132	5M	8C				R1060	8K	7D	VR1062	7G	7G
			L1110	9M	6A	R1061	7G	7G			
CR1022	3F	7H	L1113	8N	8A	R1062	8F	7F	W1021	7E	7J
CR1023	3H	8H	L1114	8N	8A	R1063	9F	7F	W1022	6E	7J
CR1028	3N	8F	L1115	7N	7C	R1064	9F	7F	W1050	6G	6F
CR1030	8H	6F	L1116	7N	8A	R1065	6L	6E	W1060	6L	8D
CR1034	4L	7H				R1066	8J	7E	W1101	6N	6C
CR1035	5L	8H	LR1060	8K	6E	R1067	8F	7F	W1102	6N	6C
CR1040	8H	6F				R1068	8J	7E			
CR1050	8G	6F	Q1021	3G	8J	R1069	7H	7G			
CR1060	8L	6D	Q1022	4G	8J	R1070	9K	6D			
OTHER PARTS											
B10	1P	CHASSIS				P231	5E	CHASSIS	S90	6A	CHASSIS
			P204	5B	CHASSIS	P232	9P	CHASSIS	S1020	5E	CHASSIS
C10	1N	CHASSIS	P205	8B	CHASSIS	P233	4P	CHASSIS			
			P206	8B	CHASSIS	P234	7P	CHASSIS			
F90	5A	CHASSIS	P207	8B	CHASSIS						

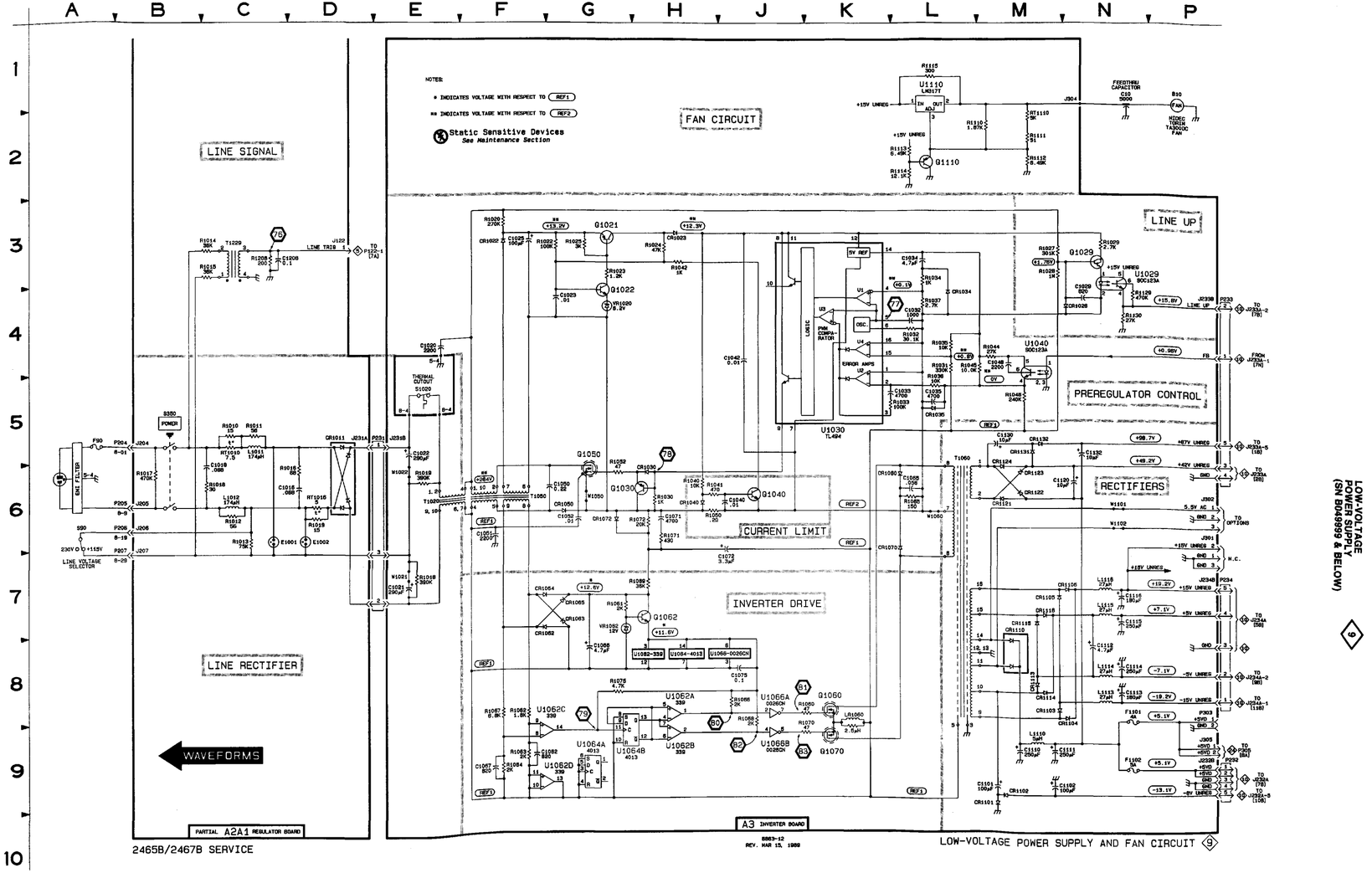

LOW-VOLTAGE REGULATORS 10

CIRCUIT NUMBER	SCHEM LOCATION	BOARD LOCATION	CIRCUIT NUMBER	SCHEM LOCATION	BOARD LOCATION	CIRCUIT NUMBER	SCHEM LOCATION	BOARD LOCATION	CIRCUIT NUMBER	SCHEM LOCATION	BOARD LOCATION
ASSEMBLY A2											
C1220	2L	2D	CR1334	9L	2G	R1223	1D	4D	R1333	11E	3J
C1222	1D	3D	CR1351	10G	4J	R1226	2C	3D	R1334	11E	3J
C1226	2D	2D	CR1376	8H	1G	R1227	2D	2D	R1351	10G	4J
C1240	3L	2D				R1228	2D	2D	R1352	10J	2J
C1245	3F	3E	F1330	11F	2E	R1229	6E	3D	R1353	10J	2J
C1246	3F	2E				R1240	3G	3F	R1354	10J	2J
C1260	5L	1D	J121	1N	2E	R1241	3G	3F	R1355	10J	2J
C1261	4J	3F	J122	3N	2F	R1242	3G	3F	R1356	10G	3J
C1270	7K	3G	J201	4N	1D	R1243	3G	3E	R1357	10K	3J
C1272	7K	3G	J202	5N	1E	R1244	3F	3E	R1358	9H	3J
C1274	7K	3G	J203	6N	1F	R1246	3F	3E	R1359	10G	2J
C1280	6L	2E	J208	6E	2H	R1247	3F	2E	R1370	8G	2G
C1290	6D	2H	J232A	10B	1J	R1248	4F	3E	R1372	8G	2G
C1291	6E	2H	J232A	7B	1J	R1249	3F	3F	R1374	7G	2G
C1292	7F	2H	J233A	1B	3F	R1261	4H	2F	R1376	8H	1G
C1300	8L	2F	J233A	7B	3F	R1262	5H	2F	R1378	7H	1G
C1330	11L	2F	J233A	7N	3F	R1264	4H	3F	R1400	5C	3H
C1331	11F	3J	J234A	11B	3H	R1270	7K	3G	R1402	9C	4H
C1350	9L	2F	J234A	5B	3H	R1273	7J	3G			
C1357	10H	2J	J234A	9B	3H	R1274	7K	3G	TP201	6F	2H
C1374	8G	2G				R1280	6K	3G			
C1400	6C	3H	L1402	9C	4H	R1281	6K	3G	U1260	5J	4F
C1402	9C	4H				R1282	6K	2G	U1270A	8J	3J
			P208	6E	2H	R1283	6J	4G	U1270B	8J	3J
CR1220	2E	3D				R1284	7J	2H	U1270C	11F	3J
CR1221	2L	2D	Q1220	1E	4E	R1285	7J	2H	U1270D	10H	3J
CR1241	3G	3F	Q1221	1D	4E	R1286	6K	2G	U1270	6C	3J
CR1242	3F	3E	Q1222	2C	3E	R1287	6J	2G	U1281A	2D	3D
CR1243	4L	2E	Q1223	1D	3E	R1288	6E	2H	U1281B	4F	3D
CR1244	2D	3D	Q1240	3G	4F	R1291	6E	2H	U1281	7C	3D
CR1260	5J	4F	Q1241	3F	4E	R1292	6E	2H	U1290	6D	2J
CR1261	6L	2E	Q1243	3F	3E	R1293	6E	2H	U1300A	6J	2H
CR1262	4J	3F	Q1245	3F	3E	R1294	7E	3G	U1300B	6J	2H
CR1263	5J	3G	Q1280	6K	4G	R1295	7E	3G	U1300C	6E	2H
CR1264	4H	2F	Q1281	6J	4G	R1296	6E	2H	U1300D	6E	2H
CR1281	6J	2G	Q1290	7E	2H	R1297	6D	2H	U1300	7C	2H
CR1282	6J	2G	Q1300	9K	4H	R1298	7D	2H	U1330	11E	4J
CR1283	6L	2F	Q1301	9J	4J	R1299	7E	2H	U1371A	4J	2G
CR1290	6E	2H	Q1351	10J	2J	R1300	8K	3H	U1371B	5H	2G
CR1294	7E	2H	Q1354	10H	2J	R1301	8K	3G	U1371C	7K	2G
CR1295	7E	2H	Q1370	7F	3G	R1302	8K	3H	U1371D	8G	2G
CR1300	8J	2H	Q1376	8H	1G	R1304	9J	4J	U1371	7C	2G
CR1301	8J	2H				R1305	8K	3H			
CR1302	8J	3H	R1204	8F	3G	R1306	8K	3H	VR1293	6F	2H
CR1303	8L	2F	R1212	1C	4D	R1307	9J	3H			
CR1330	11E	4J	R1220	1E	4D	R1309	9J	3H	W251	11N	1H
CR1331	10L	2G	R1221	1E	4D	R1331	11F	3J			
CR1332	11E	4J	R1222	1D	4D	R1332	11F	3J			
Patrial A2 also shown on diagram 9.											
OTHER PARTS											
P251	7N	CHASSIS									

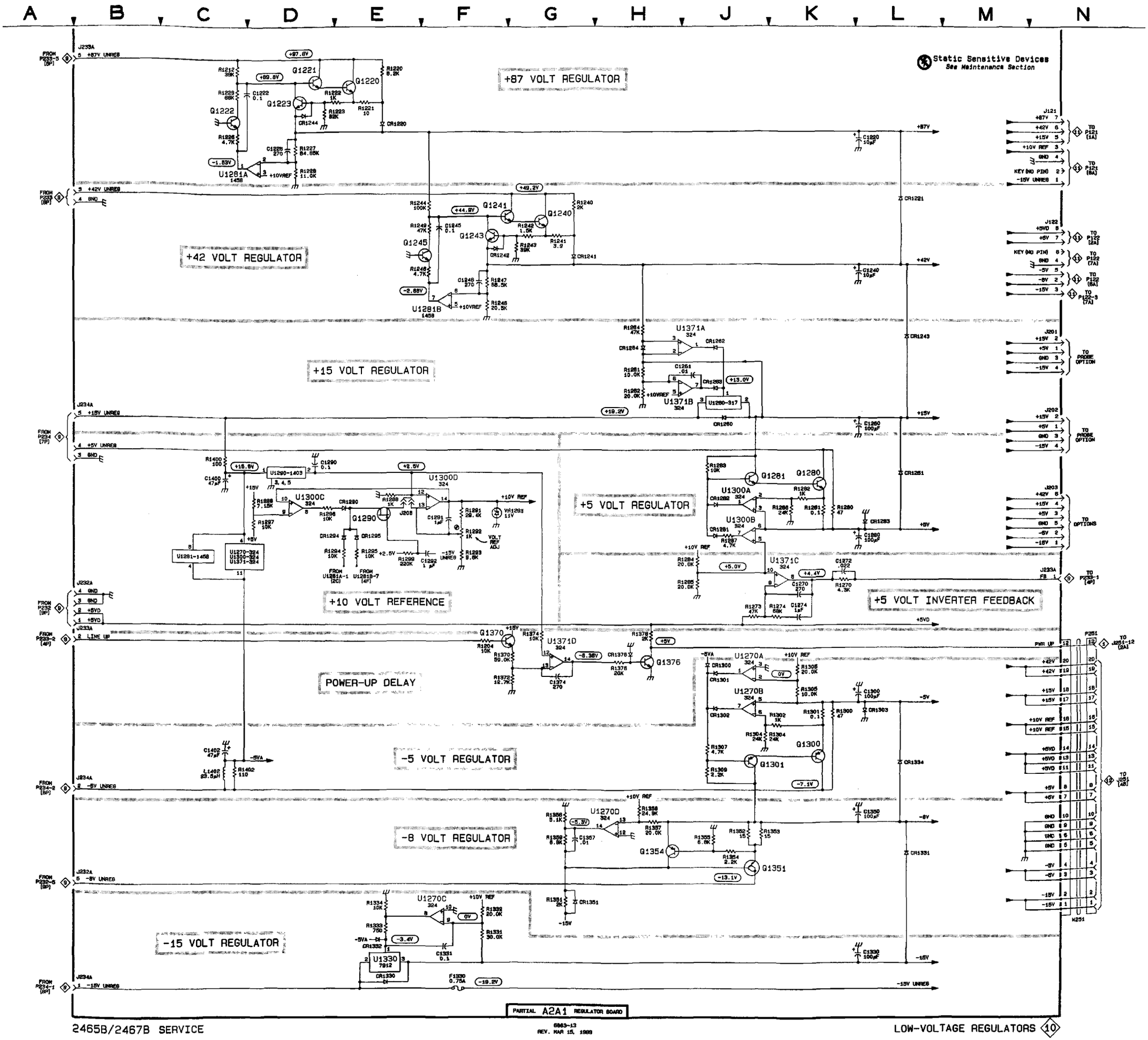
A B C D E F G H J K L M N
Static Sensitive Devices
See Maintenance Section
+87 VOLT REGULATOR
+42 VOLT REGULATOR
+15 VOLT REGULATOR
+5 VOLT REGULATOR
+10 VOLT REFERENCE
+5 VOLT INVERTER FEEDBACK
POWER-UP DELAY
-5 VOLT REGULATOR
-8 VOLT REGULATOR
-15 VOLT REGULATOR
PARTIAL A2A1 REGULATOR BOARD
6863-13
REV. MAR 15, 1989

2465B POWER DISTRIBUTION A 11

CIRCUIT NUMBER	SCHEM LOCATION	BOARD LOCATION	CIRCUIT NUMBER	SCHEM LOCATION	BOARD LOCATION	CIRCUIT NUMBER	SCHEM LOCATION	BOARD LOCATION	CIRCUIT NUMBER	SCHEM LOCATION	BOARD LOCATION
ASSEMBLY A1											
C102	6A	7D	C810	2L	8G	L120	2B	6E	U160	2C	3D
C106	6B	6D	C811	3L	8G	L219	7B	3C	U165	3K	3F
C107	6B	6D	C819	6L	9F	L220	2B	3C	U170	4K	3E
C108	7B	7D	C850	6L	8F	L307	6D	3B	U180	3C	2E
C113	3B	6D	C903	3K	6K	L325	3D	3B	U200	4B	4C
C114	3B	6D	C933	2L	10G	L336	3D	1C	U300	4D	1A
C119	6B	5B	C938	7L	11G	L521	6E	3H	U350	2L	10B
C120	2B	6E	C940	6L	11H	L733	2G	7E	U400	4D	8F
C121	2B	6E	C943	3L	11H	L738	7G	7E	U450	2L	4F
C125	4A	6C	C958	3L	8L	L740	6G	7E	U500	4E	4G
C207	6A	6C	C968	1L	11L	L743	3G	7D	U600	4F	6J
C209	5C	4C	C967	1L	11K	L938	6J	7K	U650	4F	4K
C210	3C	4E	C973	7L	10L	L973	7L	10L	U700	4G	8C
C218	7C	3D	C976	3E	8M	L980	3E	7L	U800	4J	9F
C219	7C	3D	C977	3E	7L				U850	4K	9E
C220	2C	3C	C980	3E	7K	LR101	5A	6C	U850	4K	7F
C221	2C	3D	C981	3E	7L	LR107	5C	8E	U900	4H	10J
C225	4B	3C	C985	3F	5L	LR201	5B	5C	U910	2F	10G
C307	6D	3B	C988	6J	7L	LR218	6C	3D	U950	4J	8K
C325	3D	3C	C990	2L	9M	LR219	6C	3D	U975	3E	8M
C338	3D	1C							U980	3E	7L
C415	7L	5G	CR107	6B	5J	Q700	1G	10C	U985	3F	6M
C458	2L	3F	CR807	4J	8G						
C480	2L	3K	CR811	2H	8G	R125	3B	7D	VR125	3A	7D
C500	4E	3G	CR987	4J	9M	R225	3B	3C	VR225	3B	3C
C501	5E	3G				R700	1G	10C			
C521	6L	2J	J119	6P	4H	R701	1F	10C	W101	7B	10B
C675	3L	4J	J191	1P	10K	R702	2F	10D	W103	7B	8H
C710	2F	10D	J191	8P	10K	R811	2H	8G	W104	7B	3L
C722	3G	8D	J411	2P	1K	R951	8N	10K	W105	7B	5G
C723	3G	8D	J511	4P	1D				W109	8B	10M
C730	8C	8B	J511	8A	1D	U100	4B	6C	W121	2A	5J
C731	8C	9F	J512	9A	1H	U110	2B	8B	W121	8A	5J
C732	8B	9B				U120	2B	8C	W122	7A	5H
C733	2G	8E	L101	6B	7C	U130	2B	8C			
C738	7G	8E	L107	6B	6D	U140	3K	8B			
C740	6G	8D	L113	3B	6D	U150	3K	8C			
Patrial A1 also shown on diagrams 4, 5, 6, and 8.											
OTHER PARTS											
P121	1A	CHASSIS	P121	8A	CHASSIS	P122	2A	CHASSIS			

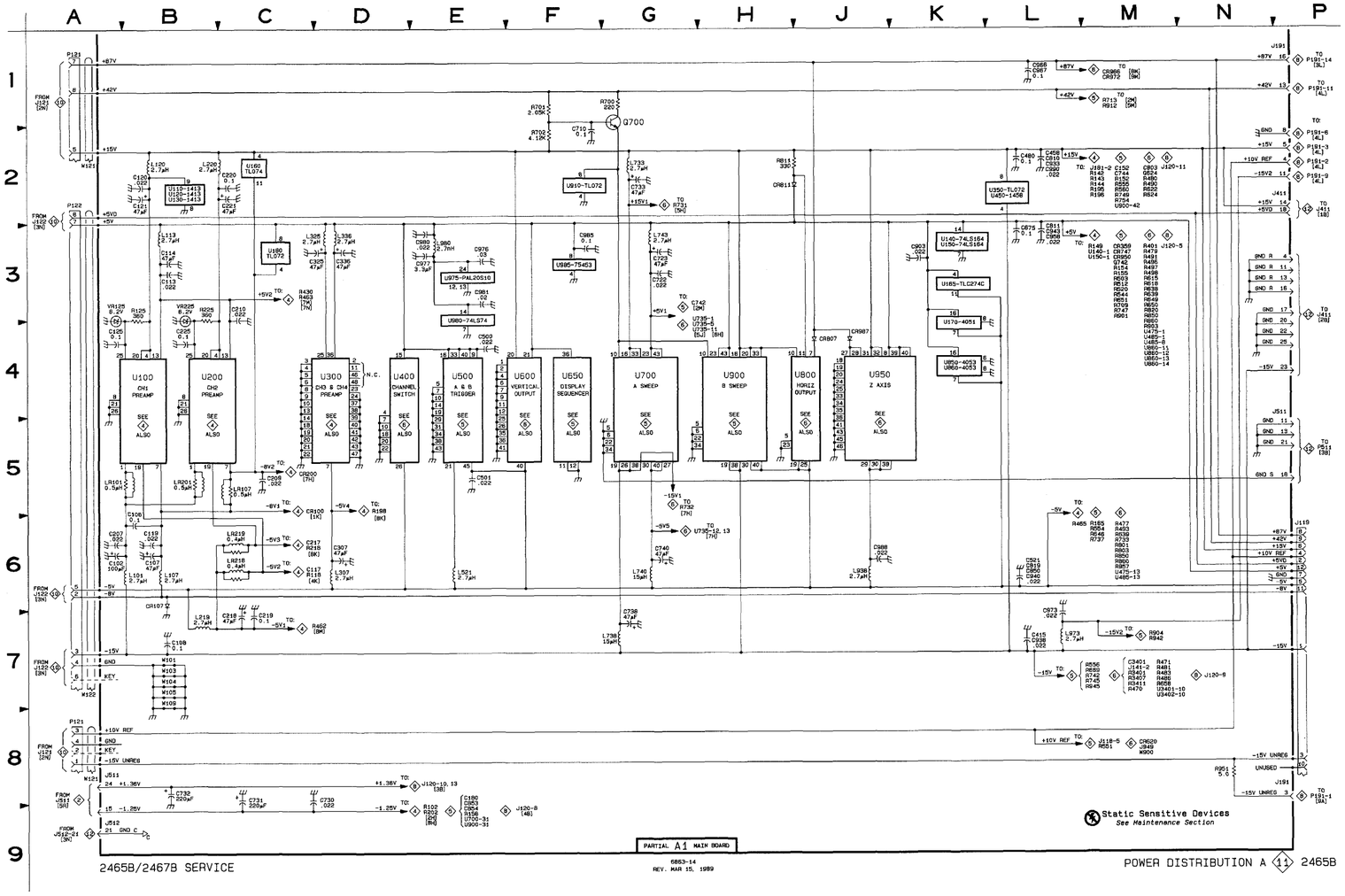

2467B POWER DISTRIBUTION A 11

CIRCUIT NUMBER	SCHEM LOCATION	BOARD LOCATION	CIRCUIT NUMBER	SCHEM LOCATION	BOARD LOCATION	CIRCUIT NUMBER	SCHEM LOCATION	BOARD LOCATION	CIRCUIT NUMBER	SCHEM LOCATION	BOARD LOCATION
ASSEMBLY A1											
C102	6A	7D	C810	2L	8G	L120	2B	6E	U160	2C	3D
C106	6B	6D	C811	3L	8G	L219	7B	3C	U165	3K	3F
C107	6B	6D	C819	6L	9F	L220	2B	3C	U170	4K	3E
C108	7B	7D	C850	6L	8F	L307	6D	3B	U180	3C	2E
C113	3B	6D	C903	3K	6K	L325	3D	3B	U200	4B	4C
C114	3B	6D	C933	2L	10G	L336	3D	1C	U300	4D	1A
C119	6B	5B	C938	7L	11G	L521	6E	3H	U350	2L	10B
C120	2B	6E	C940	6L	11H	L733	2G	7E	U400	4D	6F
C121	2B	6E	C943	3L	11H	L738	7G	7E	U450	2L	4F
C125	4A	6C	C958	3L	8L	L740	6G	7E	U500	4E	4G
C207	6A	6C	C966	1L	11L	L743	3G	7D	U600	4F	5J
C209	5C	4C	C967	1L	11K	L938	5J	7K	U650	4F	4K
C210	3C	4E	C973	7L	10L	L973	7L	10L	U700	4G	8C
C218	7C	3D	C976	3E	8M	L980	3E	7L	U800	4J	9F
C219	7C	3D	C977	3E	7L				U850	4K	9E
C220	2C	3C	C980	3E	7K	LR101	5A	6C	U860	4K	7F
C221	2C	3D	C981	3E	7L	LR107	5C	6E	U900	4H	10J
C225	4B	3C	C985	3F	5L	LR201	5B	5C	U910	2F	10G
C307	6D	3B	C988	6J	7L	LR218	6C	3D	U950	4J	8K
C325	3D	3C	C990	2L	9M	LR219	6C	3D	U975	3E	8M
C336	3D	1C							U980	3E	7L
C415	7L	5G	CR107	6B	5J	Q700	1G	10C	U985	3F	6M
C458	2L	3F	CR807	4J	8G						
C480	2L	3K	CR811	2H	8G	R125	3B	7D	VR125	3A	7D
C500	4E	3G	CR987	4J	9M	R225	3B	3C	VR225	3B	3C
C501	5E	3G				R700	1G	10C			
C521	6L	2J	J119	6P	4H	R701	1F	10C	W101	7B	10B
C675	3L	4J	J191	1P	10K	R702	2F	10D	W103	7B	8H
C710	2F	10D	J191	8P	10K	R811	2H	8G	W104	7B	3L
C722	3G	8D	J411	2P	1K	R951	8N	10K	W105	7B	5G
C723	3G	8D	J511	4P	1D				W109	8B	10M
C730	8C	8B	J511	8A	1D	U100	4B	6C	W121	2A	5J
C731	8C	9F	J512	9A	1H	U110	2B	8B	W121	8A	5J
C732	8B	9B				U120	2B	8C	W122	7A	5H
C733	2G	8E	L101	5B	7C	U130	2B	8C			
C738	7G	8E	L107	5B	6D	U140	3K	8B			
C740	6G	8D	L113	3B	6D	U150	3K	8C			
Partial A1 also shown on diagrams 4, 5, 6, 8, and 12.											
OTHER PARTS											
P121	1A	CHASSIS	P121	8A	CHASSIS	P122	2A	CHASSIS			

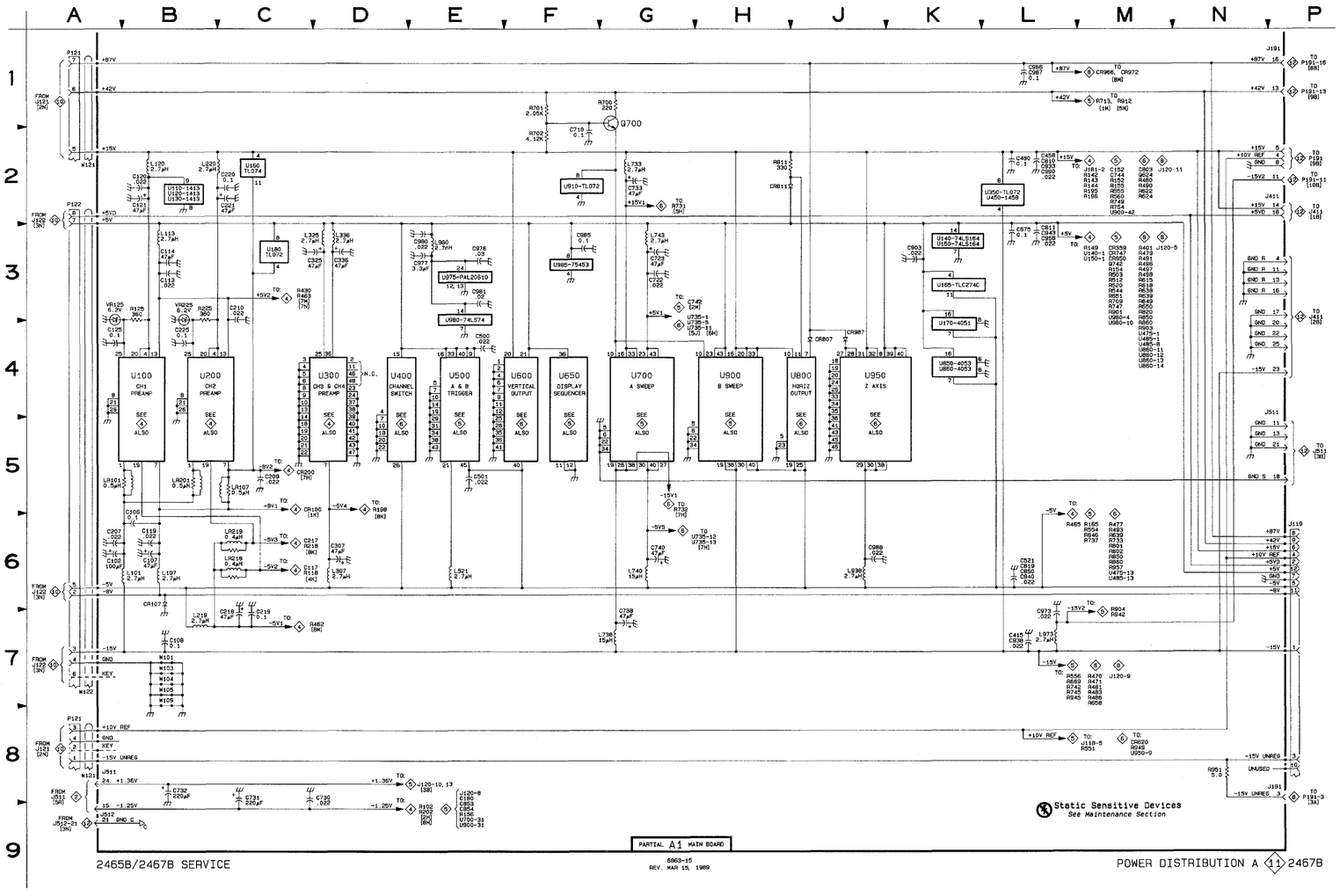

2465B POWER DISTRIBUTION B (12)
(SN B050000 & ABOVE)

CIRCUIT NUMBER	SCHEM LOCATION	BOARD LOCATION	CIRCUIT NUMBER	SCHEM LOCATION	BOARD LOCATION	CIRCUIT NUMBER	SCHEM LOCATION	BOARD LOCATION	CIRCUIT NUMBER	SCHEM LOCATION	BOARD LOCATION
ASSEMBLY A5											
C2011	5B	1C	C2836	2C	2J	U2160	5F	3F	U2660	6G	3G
C2101	5B	1B	C2850	2C	2J	U2201	5G	1B	U2800	2D	3K
C2111	5B	3D	C2851	6C	2K	U2210	6E	2B	U2805	2D	2K
C2113	7B	1C	C2855	2C	1J	U2220	5G	3H	U2810	2E	2K
C2160	5B	3H	C2860	2C	3J	U2240	5G	3F	U2820	1C	3J
C2220	5B	1A	C2861	2C	2H	U2250	5G	4E	U2830	2E	2K
C2221	5B	3H	C2870	2C	2F	U2260	5F	3G	U2835	2E	2J
C2222	4B	1C	C2875	2C	2J	U2301	5G	2B	U2850	2E	2J
C2240	5B	2F	C2885	2C	1J	U2310	5G	3B	U2855	2E	1G
C2250	5B	4F	C2890	2C	1K	U2350	5G	4F	U2860	2F	2J
C2331	4B	1C	C2901	2C	2H	U2360	5H	2G	U2865	2G	1G
C2352	6B	3E	C2905	2C	3J	U2401	5J	3B	U2870	2E	1G
C2415	5B	4E	C2913	3B	3J	U2405	6G	2F	U2875	2E	2J
C2440	5C	2E	C2926	2C	1H	U2410	6G	1B	U2880	2E	1J
C2450	5C	2A	C2940	1B	3J	U2415	6G	4E	U2885	2E	1J
C2451	5C	3A	C2950	2C	3J	U2420	4D	2C	U2890	2E	1K
C2452	6B	2A	C2960	2C	1K	U2425	6G	3E	U2900	2E	3K
C2460	5C	2F	C2965	1B	1K	U2430	4D	2C	U2905	2F	3K
C2501	5C	4A	C2970	2C	2K	U2440	6E	3E	U2910	1D	2H
C2510	6B	3B	C2980	2C	3K	U2450	6G	4E	U2920	2H	1H
C2520	7B	1C	C2981	6C	1J	U2480	5H	2E	U2930	2J	3H
C2530	4C	4C	C2990	2C	1G	U2501	5J	4B	U2935	2F	1H
C2540	6B	3G	C2995	2C	1G	U2510	6F	4B	U2940	2E	1H
C2542	6B	2D				U2520	4E	3D	U2950	6G	2K
C2550	5C	4F	J251	4A	1D	U2521	5J	3C	U2960	2G	2H
C2610	7B	3C	J411	1A	4K	U2530	5J	3C	U2965	2E	1K
C2629	7C	4D	J511	3A	4C	U2540	5K	3F	U2970	2E	2K
C2640	5C	4F	J512	3M	4H	U2550	5K	4F	U2975	2E	2H
C2641	6B	4G	J652	4M	2A	U2560	5K	4F	U2980	6G	1J
C2650	6B	4D	J4241	4M	1E	U2570	5K	4G	U2985	2G	2J
C2820	1B	3J	J4241	7M	1E	U2601	5J	4B	U2990	2E	1J
C2821	3B	3J	J4330	5M	2D	U2620	4D	4C	U2995	2E	1H
C2830	1B	3J				U2630	4D	4C			
C2831	2C	2K	U2101	5E	2B	U2640	5K	4G	Y2540	6H	2D
C2835	2C	3K	U2140	5E	3D	U2650	6G	3G			

Partial A5 also shown on diagrams 1, 2, and 7.

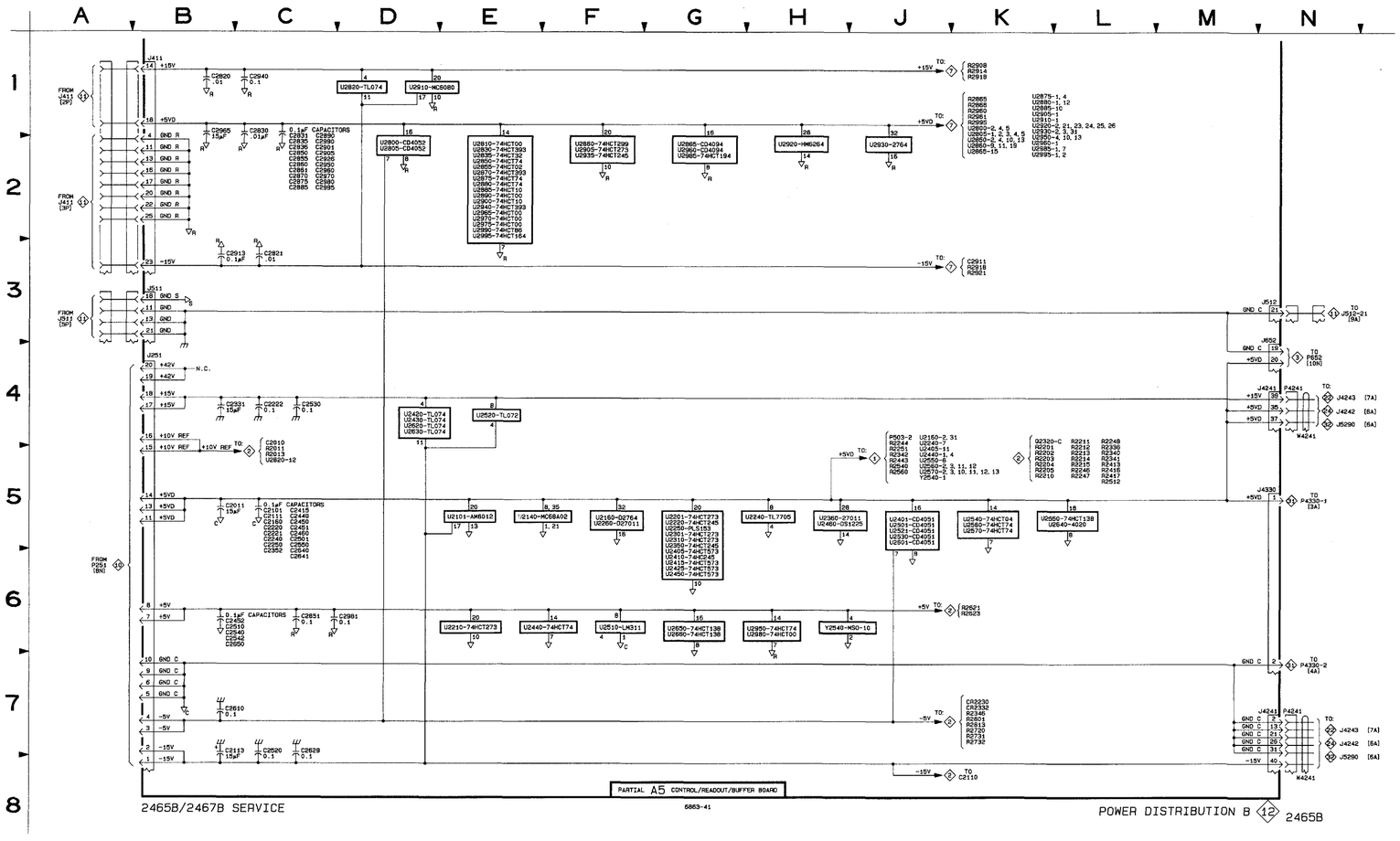

2465B POWER DISTRIBUTION B (12)
(SN B050000 & ABOVE)

2465B POWER DISTRIBUTION B (12)
(SN B049999 & BELOW)

CIRCUIT NUMBER	SCHEM LOCATION	BOARD LOCATION	CIRCUIT NUMBER	SCHEM LOCATION	BOARD LOCATION	CIRCUIT NUMBER	SCHEM LOCATION	BOARD LOCATION	CIRCUIT NUMBER	SCHEM LOCATION	BOARD LOCATION
ASSEMBLY A4											
C2830	3B	1C	C2970	4B	3D	U2855	4H	2D	U2940	4H	4C
C2835	3B	2C	C2980	4B	3F	U2860	3F	2D	U2950	4H	4D
C2851	3B	1D	C2990	4B	3F	U2865	3G	2E	U2960	3G	3E
C2855	4B	2D				U2870	4H	2E	U2965	4H	3E
C2860	4B	2D	R2805	3C	2B	U2880	4H	1F	U2970	4H	4E
C2865	4B	2E				U2885	4H	2F	U2980	4H	3F
C2901	4B	3B	U2800	3D	2B	U2890	4H	2F	U2985	3G	3E
C2912	4B	3B	U2805	3D	2B	U2900	4H	3A	U2990	4H	3F
C2913	5B	4B	U2810	3H	2A	U2905	3D	3A	U2995	4H	4E
C2926	4B	3C	U2820	3C	2A	U2910	3D	3A			
C2940	3B	4C	U2830	3H	1C	U2920	3E	3B	VR2805	4C	2B
C2950	4B	4D	U2835	3H	2C	U2930	3F	2D			
C2960	4B	3E	U2850	4H	1D	U2935	3F	3C	W411	5A	1B
Patrial A4 also shown on diagram 7.											
ASSEMBLY A5											
C2011	7B	1C	C2601	7C	4B	U2160	7G	1J	U2521	7G	3D
C2101	7C	1B	C2610	8B	4C	U2201	7E	2A	U2530	7G	3E
C2111	7C	1C	C2620	8C	3C	U2210	7D	2B	U2540	7J	3G
C2112	8C	1C	C2632	8C	3F	U2220	7E	2C	U2550	7H	3H
C2113	8B	1C	C2650	7C	4H	U2240	7F	2G	U2601	7G	4A
C2160	7C	1H	C2660	7C	4J	U2250	7F	2G	U2620	6C	4D
C2220	7B	2D	C2740	8B	4G	U2260	7G	2J	U2630	6C	4E
C2221	6C	2E				U2301	7E	2A	U2640	7H	4G
C2320	8B	2D	J251	6B	1D	U2401	7G	2A	U2650	7H	4H
C2331	6B	2E	J652	6J	1A	U2410	7H	2B	U2660	7E	4J
C2450	7C	2H				U2420	6C	2D			
C2501	7C	3B	TP2070	5G	1L	U2430	6C	2E	W511	6B	4C
C2510	7C	3C	TP2701	5E	4A	U2440	7J	2G	W512	5K	4G
C2520	6C	3D				U2501	7G	3A	W2070	5F	1K
C2530	6C	3F	U2101	7D	1A	U2510	7D	3C	W2610	5F	4C
C2552	7C	3H	U2140	7D	1F	U2520	6D	3D	W2701	5E	4A
Patrial A5 also shown on diagrams 1 and 2.											
ASSEMBLY A6A1											
C3001	7K	4A				U3003	7L	3C	U3006	7L	3F
C3002	7K	3F	U3001	7L	3B	U3004	7L	3D			
C3019	7K	4D	U3002	7L	2C	U3005	7L	2F	W652	7K	3A
Patrial A6A1 also shown on diagram 3.											
ASSEMBLY A9											
P191	1B	4B	U1890 U1956	2D 2D	2E 4C	W1909	2B	2A			
Patrial A9 also shown on diagrams 6 and 8.											
OTHER PARTS											
P411	3A	CHASSIS	P511	5A	CHASSIS	P512	5K	CHASSIS	P652	6J	CHASSIS

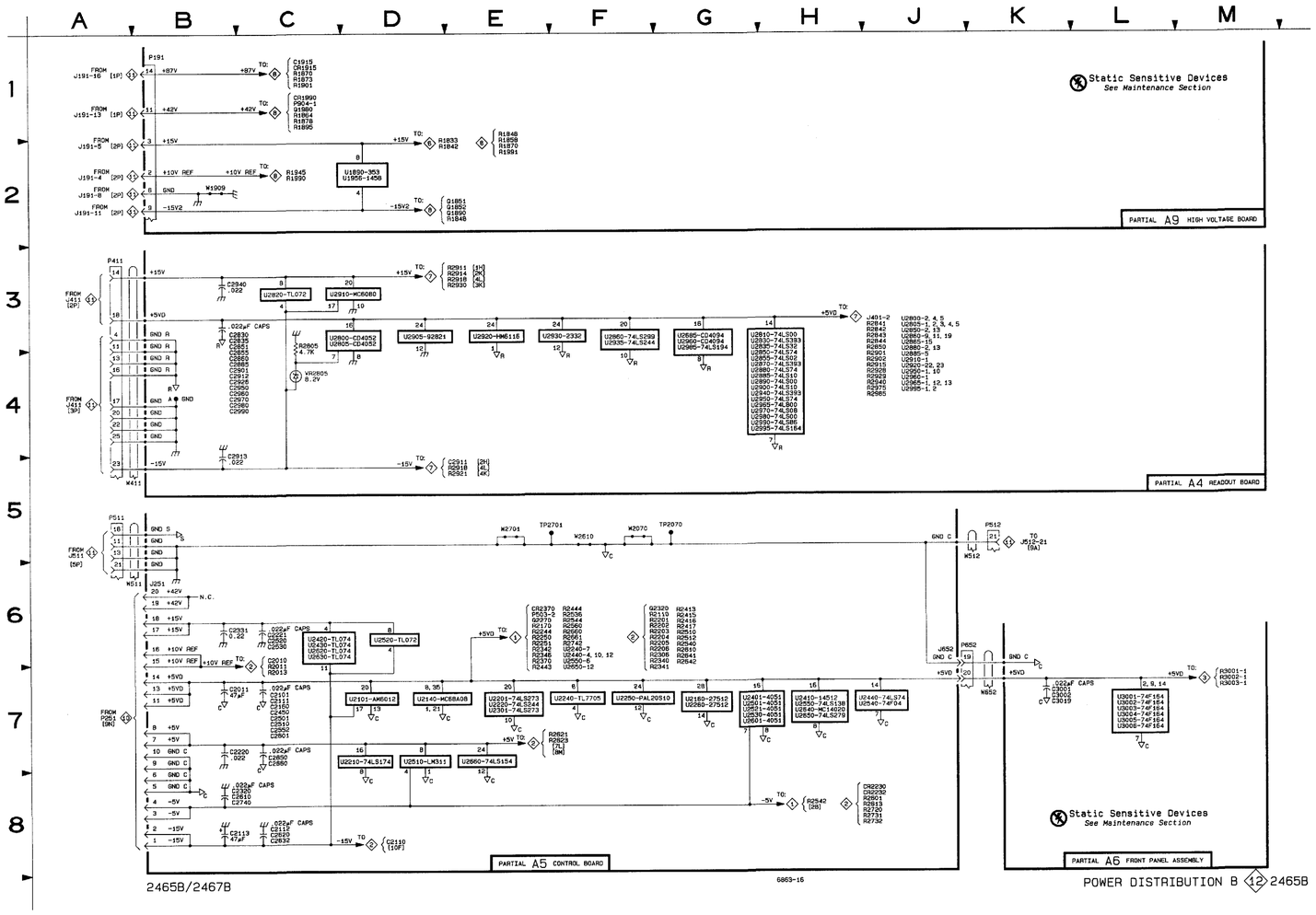

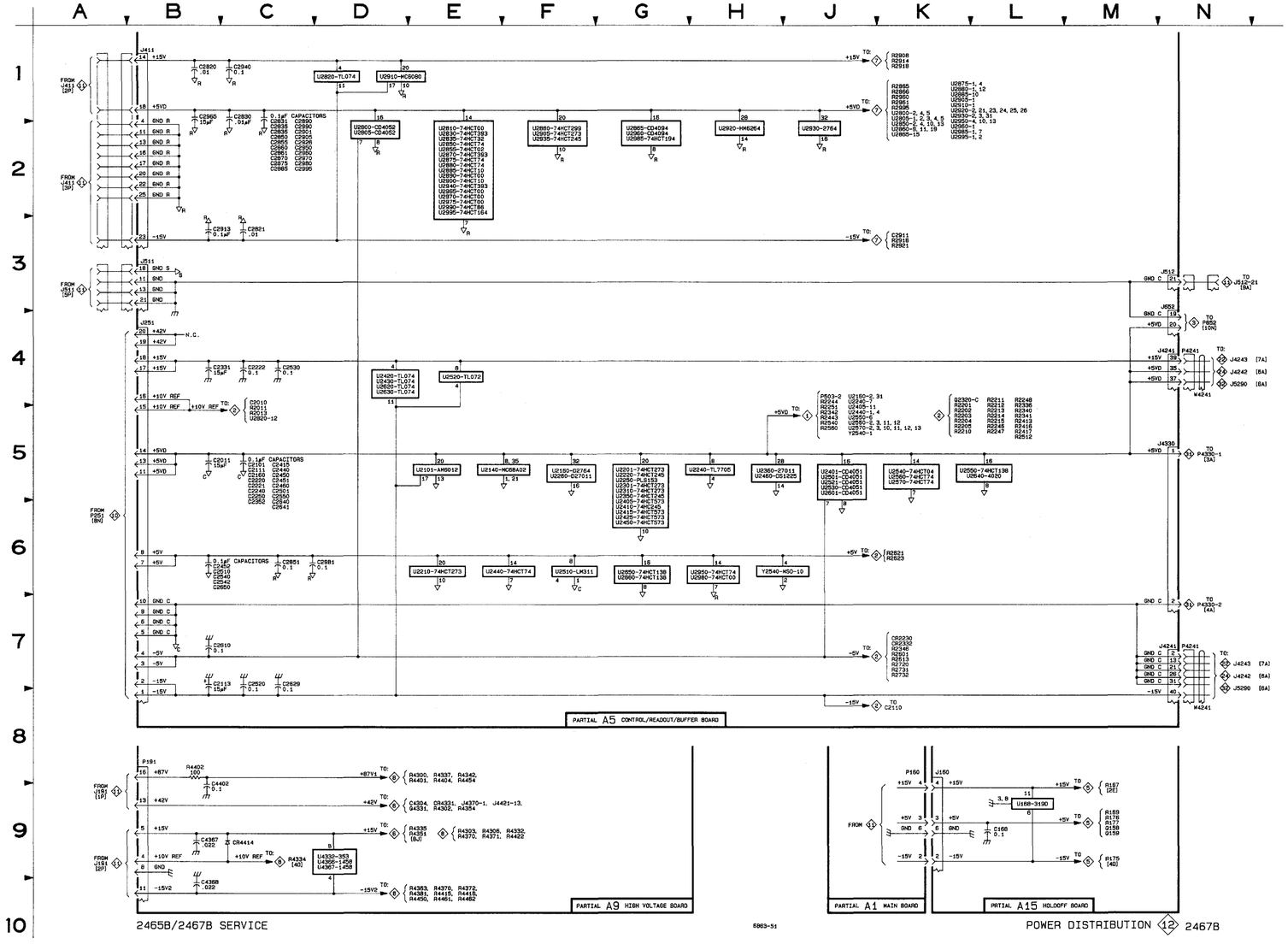
PARTIAL A5 CONTROL/READOUT/BUFFER BOARD
PARTIAL A9 HIGH VOLTAGE BOARD
PARTIAL A1 MAIN BOARD
PARTIAL A15 HOLDOFF BOARD

2467B POWER DISTRIBUTION B 12

CIRCUIT NUMBER	SCHEM LOCATION	BOARD LOCATION	CIRCUIT NUMBER	SCHEM LOCATION	BOARD LOCATION	CIRCUIT NUMBER	SCHEM LOCATION	BOARD LOCATION	CIRCUIT NUMBER	SCHEM LOCATION	BOARD LOCATION
ASSEMBLY A1											
P160	1K	2K									
Patrial A1 also shown on diagrams 4, 5, 6, 8, and 11.											
ASSEMBLY A4											
C2830	3B	1C	C2970	4B	3D	U2860	3F	2D	U2960	3G	3E
C2835	3B	2C	C2980	4B	3F	U2865	3G	2E	U2965	4H	3E
C2851	3B	1D	C2990	4B	3F	U2870	4H	2E	U2970	4H	4E
C2855	4B	2D				U2880	4H	1F	U2980	4H	3F
C2860	4B	2D	R2805	3C	2B	U2885	4H	2F	U2985	3G	3E
C2885	4B	2E				U2890	4H	2F	U2990	4H	3F
C2901	4B	3B	U2800	3D	2B	U2900	4H	3A	U2995	4H	4E
C2912	4B	3B	U2805	3D	2B	U2905	3D	3A			
C2913	5B	4B	U2810	3H	2A	U2910	3D	3A	VR2805	4C	2B
C2926	4B	3C	U2820	3C	2A	U2920	3E	3B			
C2940	3B	4C	U2830	3H	1C	U2930	3F	2D	W411	5A	1B
C2940	3B	4C	U2835	3H	2C	U2935	3F	3C			
C2950	4B	4D	U2850	4H	1D	U2940	4H	4C			
C2960	4B	3E	U2855	4H	2D	U2950	4H	4D			
Patrial A4 also shown on diagram 7.											
ASSEMBLY A5											
C2011	7B	1C	C2601	7C	4B	U2160	7G	1J	U2521	7G	3D
C2101	7C	1B	C2610	8B	4C	U2201	7E	2A	U2530	7G	3E
C2111	7C	1C	C2620	8C	3C	U2210	7D	2B	U2540	7J	3G
C2112	8C	1C	C2632	8C	3F	U2220	7E	2C	U2550	7H	3H
C2113	8B	1C	C2650	7C	4H	U2240	7F	2G	U2601	7G	4A
C2160	7C	1H	C2660	7C	4J	U2250	7F	2G	U2620	6C	4D
C2220	7B	2D	C2740	8B	4G	U2260	7G	2J	U2630	6C	4E
C2221	6C	2E				U2301	7E	2A	U2640	7H	4G
C2320	8B	2D	J251	6B	1D	U2401	7G	2A	U2650	7H	4H
C2331	6B	2E	J652	6J	1A	U2410	7H	2B	U2660	7E	4J
C2450	7C	2H				U2420	6C	2D			
C2501	7C	3B	TP2070	5G	1L	U2430	6C	2E	W511	6B	4C
C2510	7C	3C	TP2701	5G	4A	U2440	7J	2G	W512	5K	4G
C2520	6C	3D				U2501	7G	3A	W2070	5F	1K
C2530	6C	3F	U2101	7D	1A	U2510	7D	3C	W2610	5F	4C
C2552	7C	3H	U2140	7D	1F	U2520	6D	3D	W2701	5E	4A
Patrial A5 also shown on diagrams 1 and 2.											
ASSEMBLY A6A1											
C3001	7K	4A				U3003	7L	3C	U3006	7L	3F
C3002	7K	3F	U3001	7L	3B	U3004	7L	3D			
C3019	7K	4D	U3002	7L	2C	U3005	7L	2F	W652	7K	3A
Patrial A6A1 also shown on diagram 3.											
ASSEMBLY A9											
C4367	2B	2F	CR4414	2C	4C	R4402	1B	4A	U4367	2D	2F
C4368	2B	2F									
C4402	1B	4A	P191	1B	4B	U4332	2D	2D			
						U4366	2D	1F			
Patrial A9 also shown on diagrams 6 and 8.											
ASSEMBLY A15											
C168	1L	1B	J160	1K	1B	U168	1L	1A			
Patrial A15 also shown on diagram 5.											
OTHER PARTS											
P411	3A	CHASSIS	P511	5A	CHASSIS	P512	5K	CHASSIS	P652	6J	CHASSIS

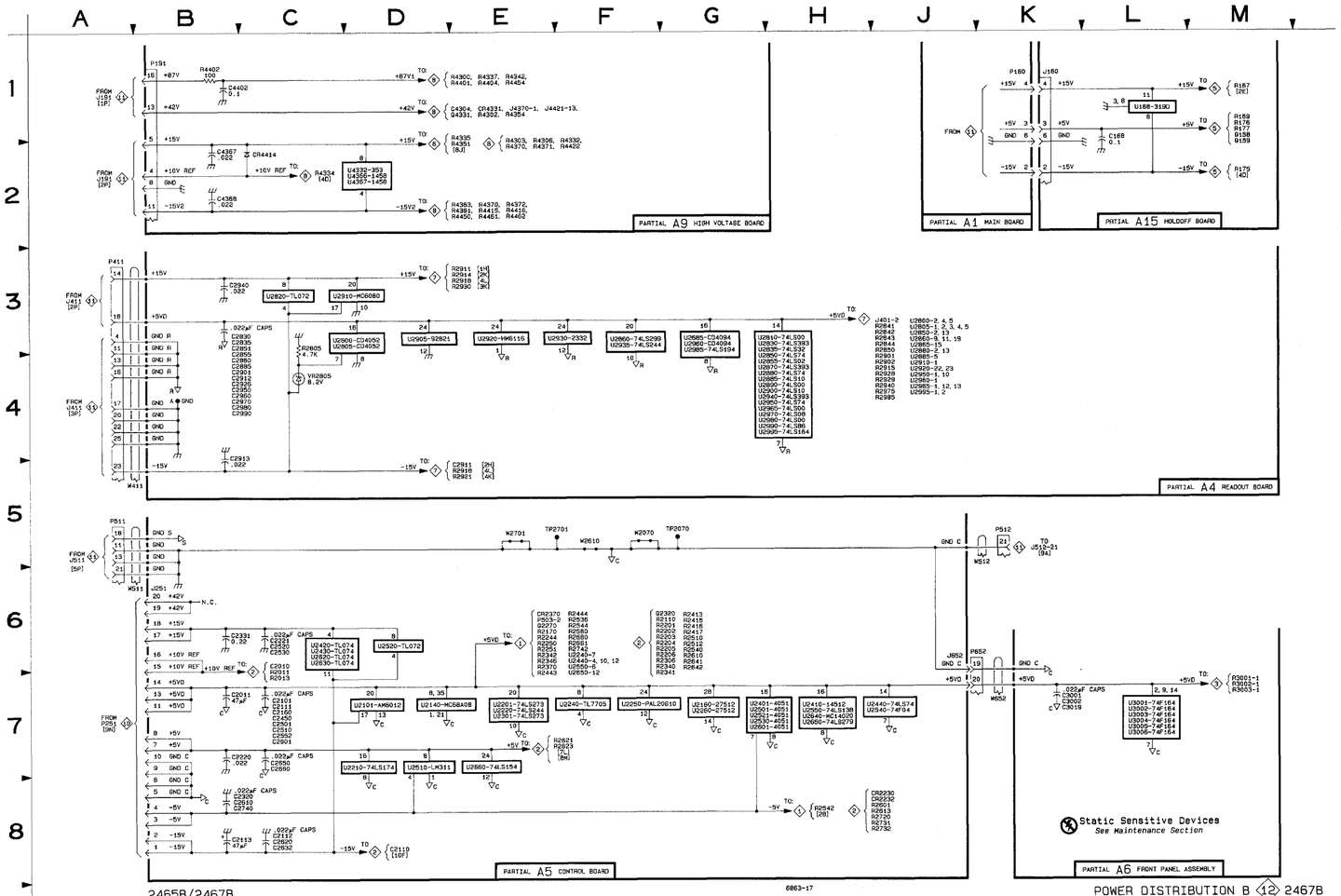

2467B POWER DISTRIBUTION B (SN B049999 & BELOW)

12

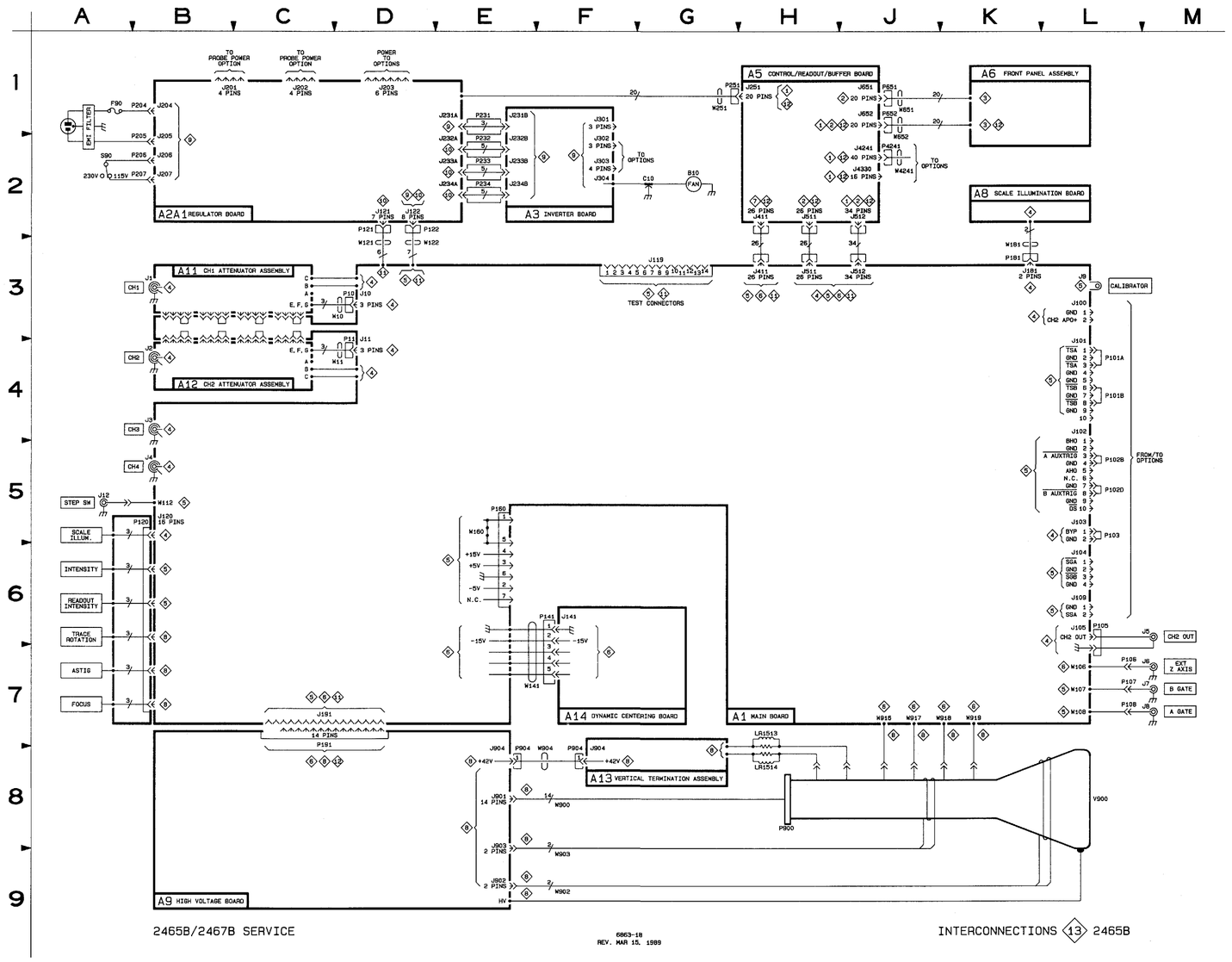
A2A1 REGULATOR BOARD
A3 INVERTER BOARD
A5 CONTROL/READOUT/BUFFER BOARD
A6 FRONT PANEL ASSEMBLY
A8 SCALE ILLUMINATION BOARD
A11 CH1 ATTENUATOR ASSEMBLY
A12 CH2 ATTENUATOR ASSEMBLY
A14 DYNAMIC CENTERING BOARD
A1 MAIN BOARD
A13 VERTICAL TERMINATION ASSEMBLY
A9 HIGH VOLTAGE BOARD
TO PROBE POWER OPTION
POWER TO OPTIONS
TO OPTIONS
EMI FILTER
230V
115V
CH1
CH2
CH3
CH4
STEP SW
SCALE ILLUM.
INTENSITY
READOUT INTENSITY
TRACE ROTATION
ASTIG
FOCUS
TEST CONNECTORS
CALIBRATOR
FROM/TO OPTIONS
CH2 OUT
EXT Z AXIS
B GATE
A GATE
V900

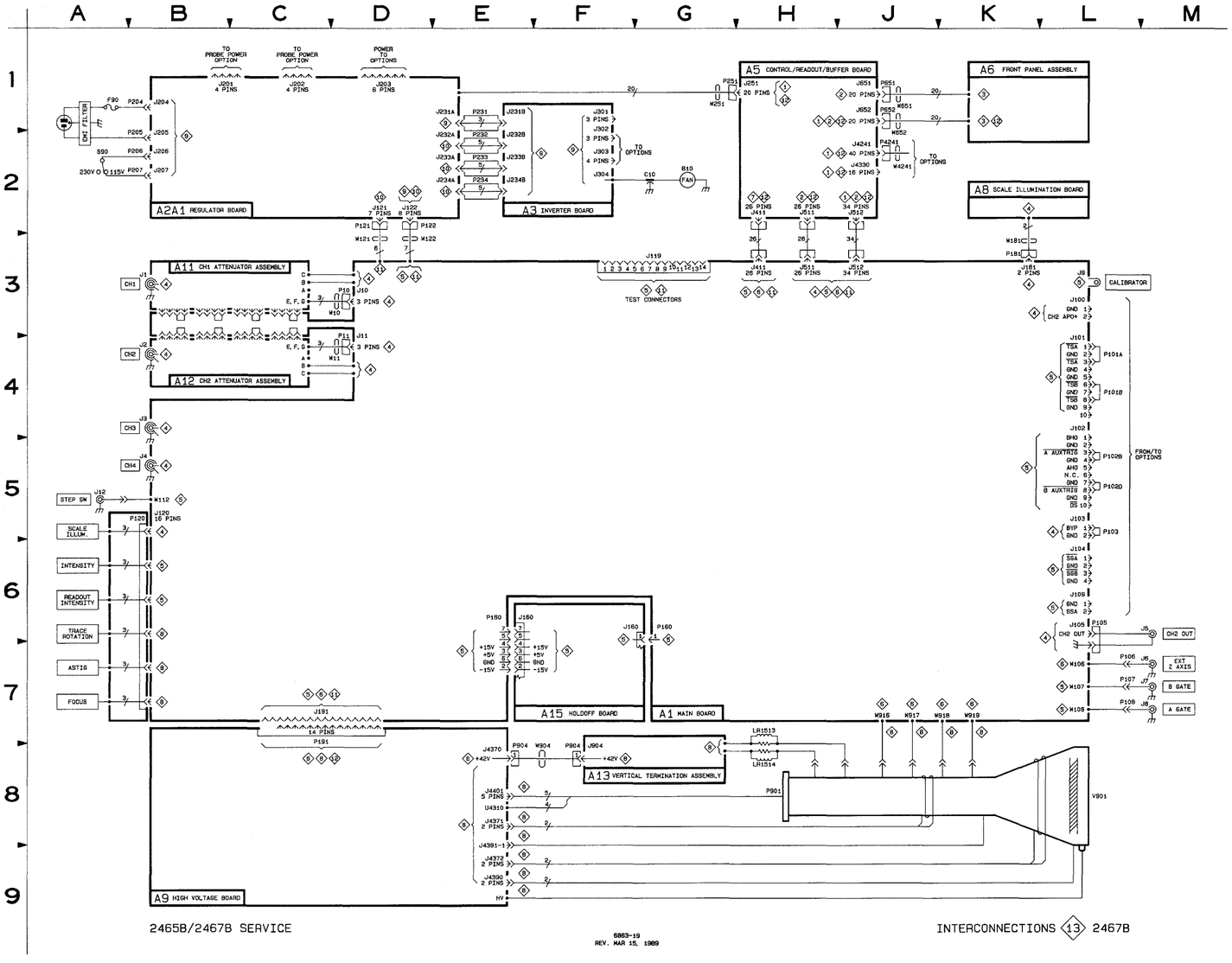
A2A1 REGULATOR BOARD
A3 INVERTER BOARD
A5 CONTROL/READOUT/BUFFER BOARD
A6 FRONT PANEL ASSEMBLY
A8 SCALE ILLUMINATION BOARD
A11 CH1 ATTENUATOR ASSEMBLY
A12 CH2 ATTENUATOR ASSEMBLY
A15 HOLDOFF BOARD
A1 MAIN BOARD
A13 VERTICAL TERMINATION ASSEMBLY
A9 HIGH VOLTAGE BOARD
TO PROBE POWER OPTION
POWER TO OPTIONS
TO OPTIONS
FROM/TO OPTIONS
TEST CONNECTORS
CALIBRATOR
CH2 OUT
EXT Z AXIS
B GATE
A GATE
STEP SW
SCALE ILLUM.
INTENSITY
READOUT INTENSITY
TRACE ROTATION
ASTIG
FOCUS
CH1
CH2
CH3
CH4
CH1 FILTER
230V
115V
FAN
V901

OTHER PARTS (2465B)
(SN B050000 & ABOVE)

CIRCUIT NUMBER	SCHEM NUMBER	SCHEM LOCATION	CIRCUIT NUMBER	SCHEM NUMBER	SCHEM LOCATION	CIRCUIT NUMBER	SCHEM NUMBER	SCHEM LOCATION	CIRCUIT NUMBER	SCHEM NUMBER	SCHEM LOCATION
B10	9	1P	P108	5	6S	P901	8	6L	R3017	3	3M
			P109	5	4K	P902	8	2H	R3018	3	6M
C10	9	1N	P120	4	4M	P903	8	4H	R3019	3	4M
			P120	5	3B	P4241	12	4N			
E200	4	7P	P120	8	2B	P4241	12	7N	S90	9	6A
			P121	11	1A	P4241	1	1N	S1020	9	5E
F90	9	5A	P121	11	8A	P4241	1	2A			
			P122	11	2A	P4241	1	6N	V900	8	1K
J1	4	1A	P122	5	8A	P4241	2	4R			
J2	4	7A	P141	6	5F				W10	4	2G
J3	4	9A	P141	6	7C	R134	4	4L	W11	4	7G
J4	4	10A	P181	4	4N	R351	5	4A	W651	3	9N
J5	4	7P	P204	9	5B	R352	5	3A	W900	8	3H
J8	6	9A	P205	9	6B	R975	8	2A	W900	8	6L
J7	5	6S	P206	9	6B	R976	8	5A	W900	8	7H
J8	5	6S	P207	9	6B	R977	8	5A	W901	8	5H
J12	5	1A	P231	9	5E	R3007	3	5M	W902	8	2H
			P232	9	9P	R3008	3	2M	W903	8	4H
LR1513	8	5L	P233	9	4P	R3009	3	4M	W916	6	2N
LR1514	8	5L	P234	9	7P	R3010	3	7M	W917	6	3N
			P251	10	7N	R3011	3	6M	W2421	2	4R
P10	4	2G	P651	3	1N	R3012	3	5M	W4241	12	4N
P11	4	7G	P652	3	10N	R3013	3	8M	W4241	12	8N
P105	4	7P	P652	3	1A	R3014	3	2M	W4241	1	2A
P106	6	9A	P901	8	3H	R3015	3	1M	W4241	1	2N
P107	5	6S	P901	8	5H	R3016	3	7M	W4241	1	8N

OTHER PARTS (2465B)
(SN B049999 & BELOW)

CIRCUIT NUMBER	SCHEM NUMBER	SCHEM LOCATION	CIRCUIT NUMBER	SCHEM NUMBER	SCHEM LOCATION	CIRCUIT NUMBER	SCHEM NUMBER	SCHEM LOCATION	CIRCUIT NUMBER	SCHEM NUMBER	SCHEM LOCATION
B10	9	1P	P108	5	6S	P512	12	5K	R3011	3	6M
			P109	5	4K	P512	1	1P	R3012	3	5M
C10	9	1N	P120	4	4M	P512	1	9P	R3013	3	8M
			P120	5	3B	P512	2	1A	R3014	3	2M
E200	4	7P	P120	8	2B	P512	2	1N	R3015	3	1M
			P121	11	1A	P512	2	3N	R3016	3	7M
F90	9	5A	P121	11	8A	P512	2	8A	R3017	3	3M
			P122	11	2A	P512	2	8N	R3018	3	6M
J1	4	1A	P122	5	8A	P651	3	1N	R3019	3	4M
J1	4	1A	P141	6	5F	P652	12	6J			
J2	4	7A	P141	6	7C	P652	3	10N	S90	9	6A
J2	4	7A	P181	4	4N	P652	3	1A	S1020	9	5E
J3	4	9A	P204	9	5B	P901	8	3H			
J4	4	10A	P205	9	6B	P901	8	5H	V900	8	1K
J5	4	7P	P206	9	6B	P901	8	6L			
J8	6	9A	P207	9	6B	P902	8	2H	W10	4	2G
J7	5	6S	P231	9	5E	P903	8	4H	W11	4	7G
J8	5	6S	P232	9	9P				W651	3	9N
J12	5	1A	P233	9	4P	R134	4	4L	W900	8	3H
			P234	9	7P	R351	5	4A	W900	8	6L
LR1513	8	5L	P251	10	7N	R352	5	3A	W900	8	7H
LR1514	8	5L	P411	12	3A	R975	8	2A	W901	8	5H
			P411	7	1A	R976	8	5A	W902	8	2H
P10	4	2G	P411	7	1P	R977	8	5A	W903	8	4H
P11	4	7G	P511	12	5A	R3007	3	5M	W916	6	2N
P105	4	7P	P511	2	2N	R3008	3	2M	W917	6	3N
P106	6	9A	P511	2	4A	R3009	3	4M			
P107	5	6S	P511	2	5N	R3010	3	7M			

OTHER PARTS (2467B)
(SN B050000 & ABOVE)

CIRCUIT NUMBER	SCHEM NUMBER	SCHEM LOCATION	CIRCUIT NUMBER	SCHEM NUMBER	SCHEM LOCATION	CIRCUIT NUMBER	SCHEM NUMBER	SCHEM LOCATION	CIRCUIT NUMBER	SCHEM NUMBER	SCHEM LOCATION
B10	9	1P	P11	4	7G	P651	3	1N	R3015	3	1M
			P105	4	7P	P652	3	10N	R3016	3	7M
C10	9	1N	P106	6	9A	P652	3	1A	R3017	3	3M
			P107	5	6S	P4241	12	4N	R3018	3	6M
E200	4	7P	P108	5	6S	P4241	12	7N	R3019	3	4M
			P109	5	4K	P4241	1	1N			
F90	9	5A	P120	4	4M	P4241	1	2A	S90	9	6A
			P120	5	2B	P4241	1	6N	S1020	9	5E
J1	4	1A	P120	8	1F	P4241	2	4R			
J1	4	1A	P120	8	3C				V901	8	1K
J2	4	7A	P120	8	9G	R134	4	4L			
J2	4	7A	P121	11	1A	R351	5	4A	W10	4	2G
J3	4	9A	P121	11	8A	R352	5	3A	W11	4	7G
J4	4	10A	P122	11	2A	R975	8	1E	W651	3	9N
J5	4	7P	P122	5	8A	R976	8	9G	W916	6	2N
J6	6	9A	P181	4	4N	R977	8	3C	W917	6	3N
J7	5	6S	P204	9	5B	R1501	8	3L	W2421	2	4R
J8	5	6S	P205	9	6B	R3007	3	5M	W4241	12	4N
J12	5	1A	P206	9	6B	R3008	3	2M	W4241	12	8N
J904	8	3M	P207	9	6B	R3009	3	4M	W4241	1	2A
			P231	9	5E	R3010	3	7M	W4241	1	2N
LR1513	8	3L	P232	9	9P	R3011	3	6M	W4241	1	8N
LR1514	8	3L	P233	9	4P	R3012	3	5M			
			P234	9	7P	R3013	3	8M			
P10	4	2G	P251	10	7N	R3014	3	2M			

OTHER PARTS (2467B)
(SN B049999 & BELOW)

CIRCUIT NUMBER	SCHEM NUMBER	SCHEM LOCATION	CIRCUIT NUMBER	SCHEM NUMBER	SCHEM LOCATION	CIRCUIT NUMBER	SCHEM NUMBER	SCHEM LOCATION	CIRCUIT NUMBER	SCHEM NUMBER	SCHEM LOCATION
B10	9	1P	P105	4	7P	P411	7	1P	R3008	3	2M
			P106	6	9A	P511	12	5A	R3009	3	4M
C10	9	1N	P107	5	6S	P511	2	2N	R3010	3	7M
			P108	5	6S	P511	2	4A	R3011	3	6M
E200	4	7P	P109	5	4K	P511	2	5N	R3012	3	5M
			P120	4	4M	P512	12	5K	R3013	3	8M
F90	9	5A	P120	5	2B	P512	1	1P	R3014	3	2M
			P120	8	1F	P512	1	9P	R3015	3	1M
J1	4	1A	P120	8	3C	P512	2	1A	R3016	3	7M
J1	4	1A	P120	8	9G	P512	2	1N	R3017	3	3M
J2	4	7A	P121	11	1A	P512	2	3N	R3018	3	6M
J2	4	7A	P121	11	8A	P512	2	8A	R3019	3	4M
J3	4	9A	P122	11	2A	P512	2	8N			
J4	4	10A	P122	5	8A	P651	3	1N	S90	9	6A
J5	4	7P	P181	4	4N	P652	12	6J	S1020	9	5E
J6	6	9A	P204	9	5B	P652	3	10N			
J7	5	6S	P205	9	6B	P652	3	1A	V901	8	1K
J8	5	6S	P206	9	6B						
J12	5	1A	P207	9	6B	R134	4	4L	W10	4	2G
J904	8	3M	P231	9	5E	R351	5	4A	W11	4	7G
			P232	9	9P	R352	5	3A	W651	3	9N
LR1513	8	3L	P233	9	4P	R975	8	1E	W916	6	2N
LR1514	8	3L	P234	9	7P	R976	8	9G	W917	6	3N
			P251	10	7N	R977	8	3C			
P10	4	2G	P411	12	3A	R1501	8	3L			
P11	4	7G	P411	7	1A	R3007	3	5M			

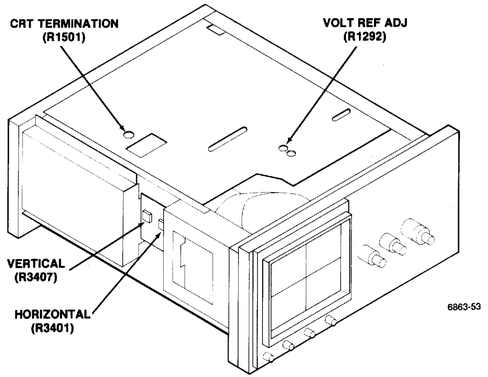

A13—CRT TERMINATION, A14—DYNAMIC CENTERING, and A2—REGULATOR, ADJUSTMENT LOCATIONS 1

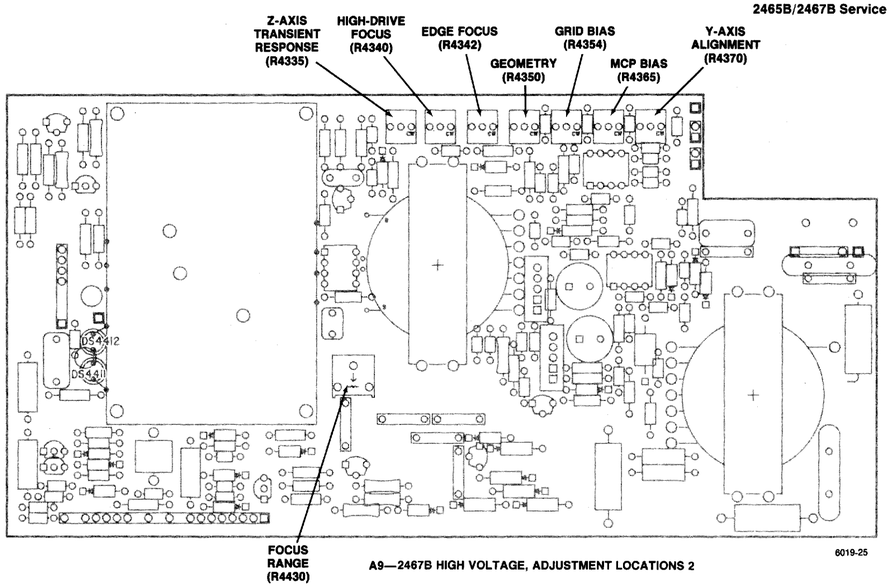

A9—2467B HIGH VOLTAGE, ADJUSTMENT LOCATIONS 2

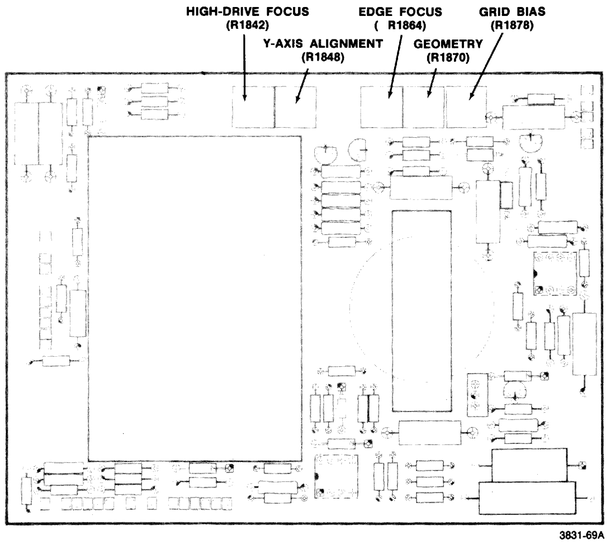

A9—2465B HIGH VOLTAGE, ADJUSTMENT LOCATIONS 2

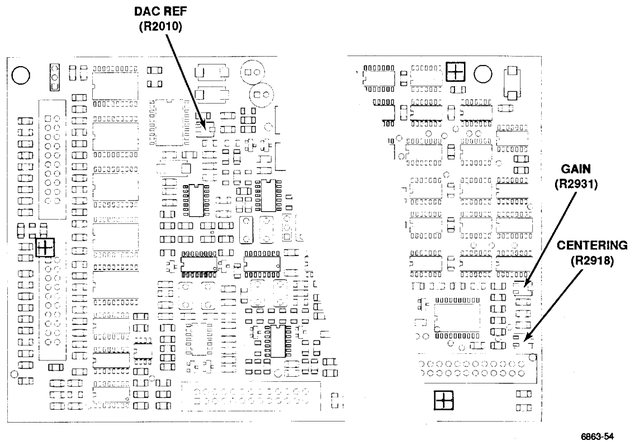

A5—CONTROL, ADJUSTMENT LOCATIONS 3

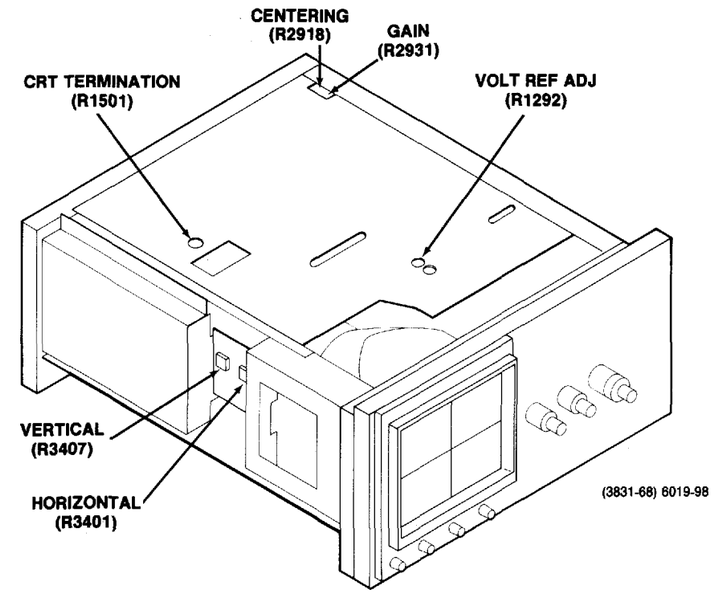

A13—CRT TERMINATION, A14—DYNAMIC CENTERING, and A2—REGULATOR, ADJUSTMENT LOCATIONS 1

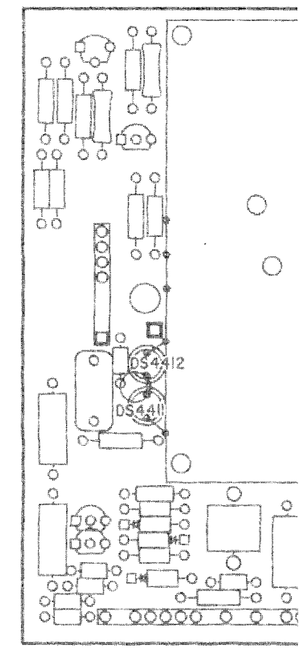

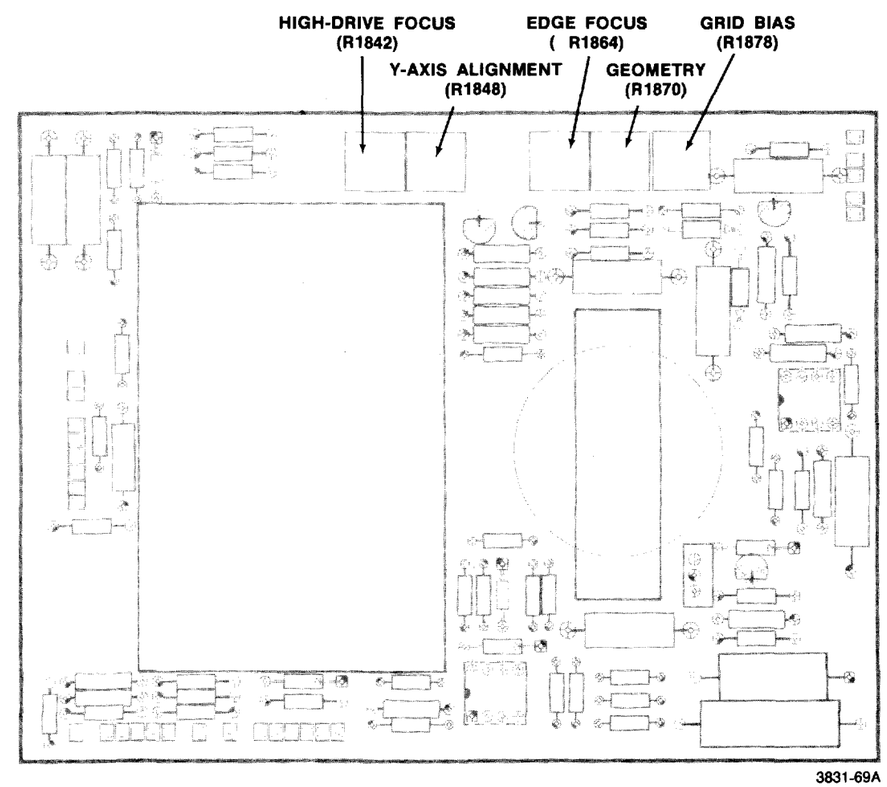

A9—2465B HIGH VOLTAGE, ADJUSTMENT LOCATIONS 2

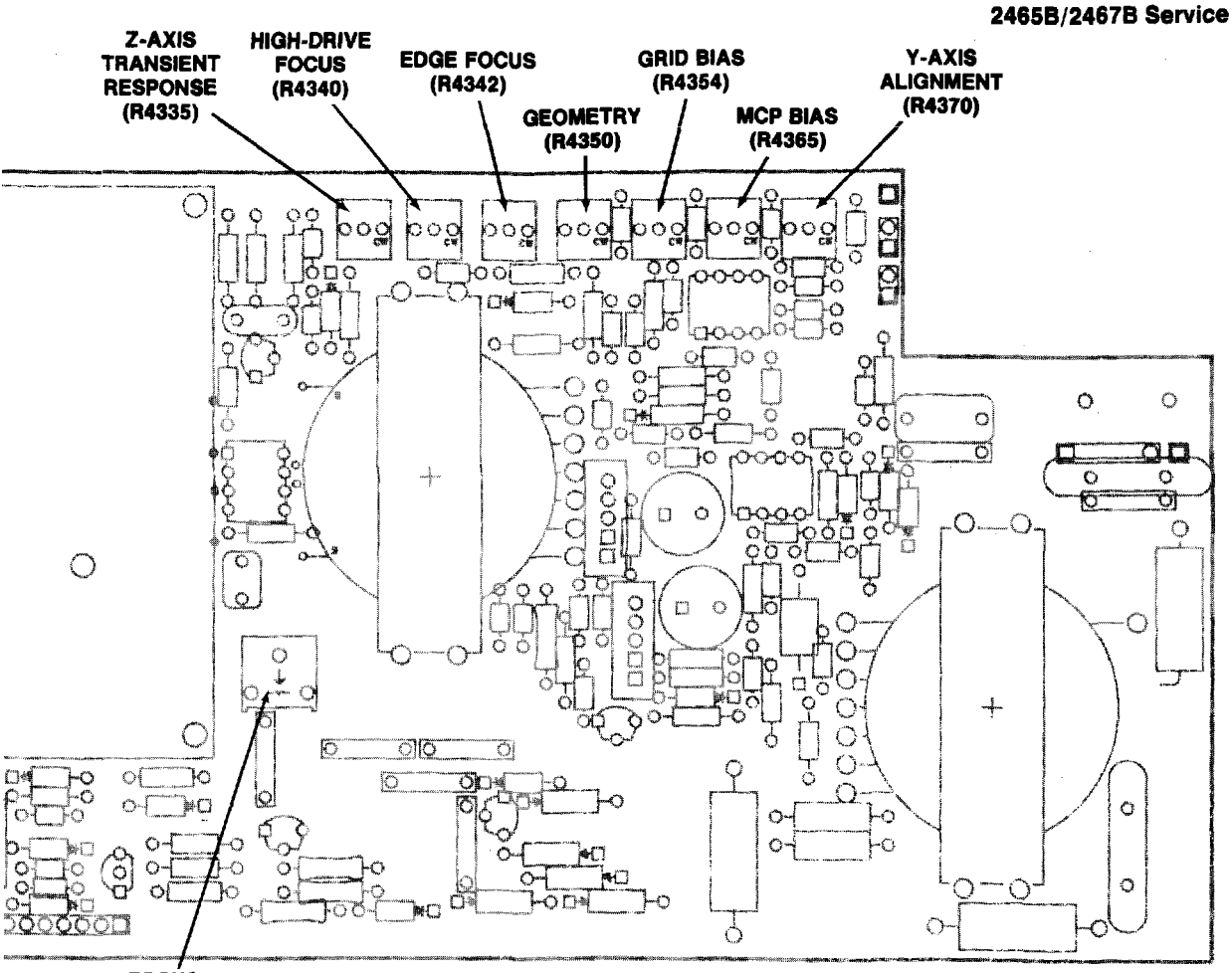

6019-25

A9—2467B HIGH VOLTAGE, ADJUSTMENT LOCATIONS 2

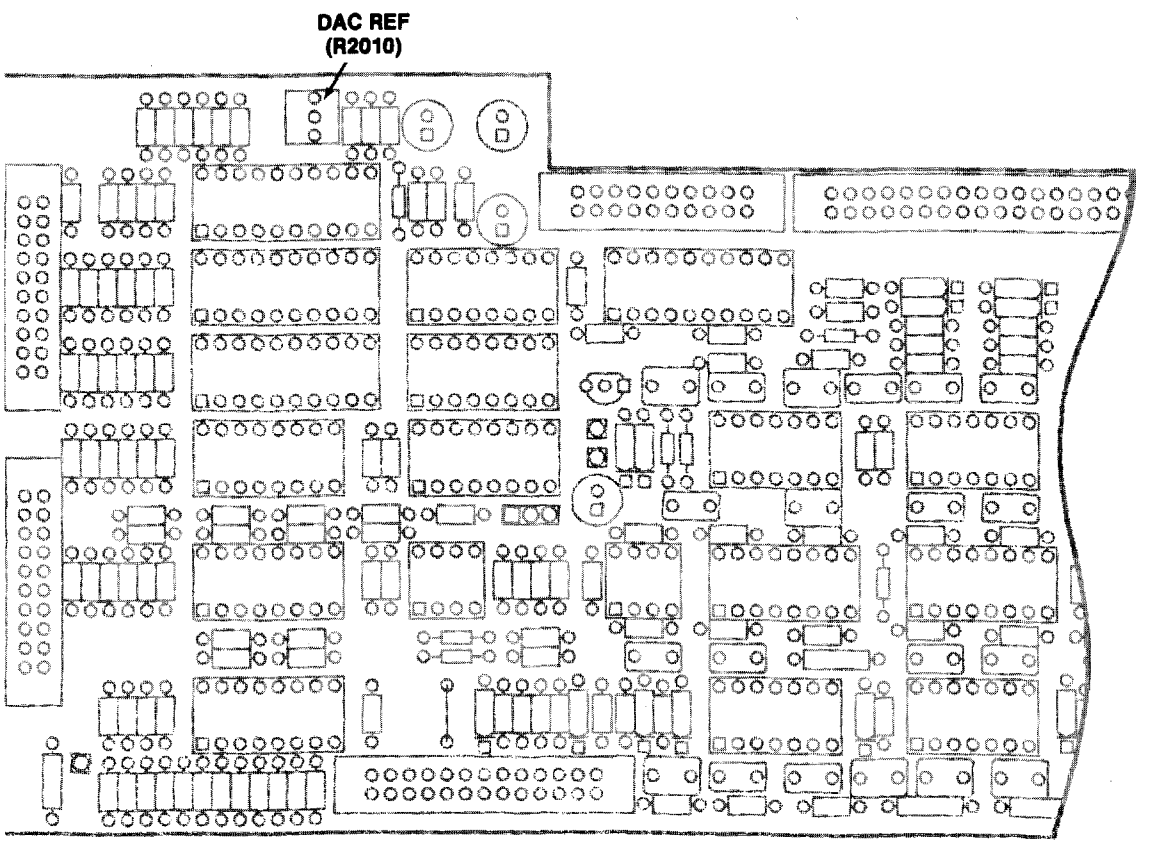

A5—CONTROL, ADJUSTMENT LOCATIONS 3

6019-26

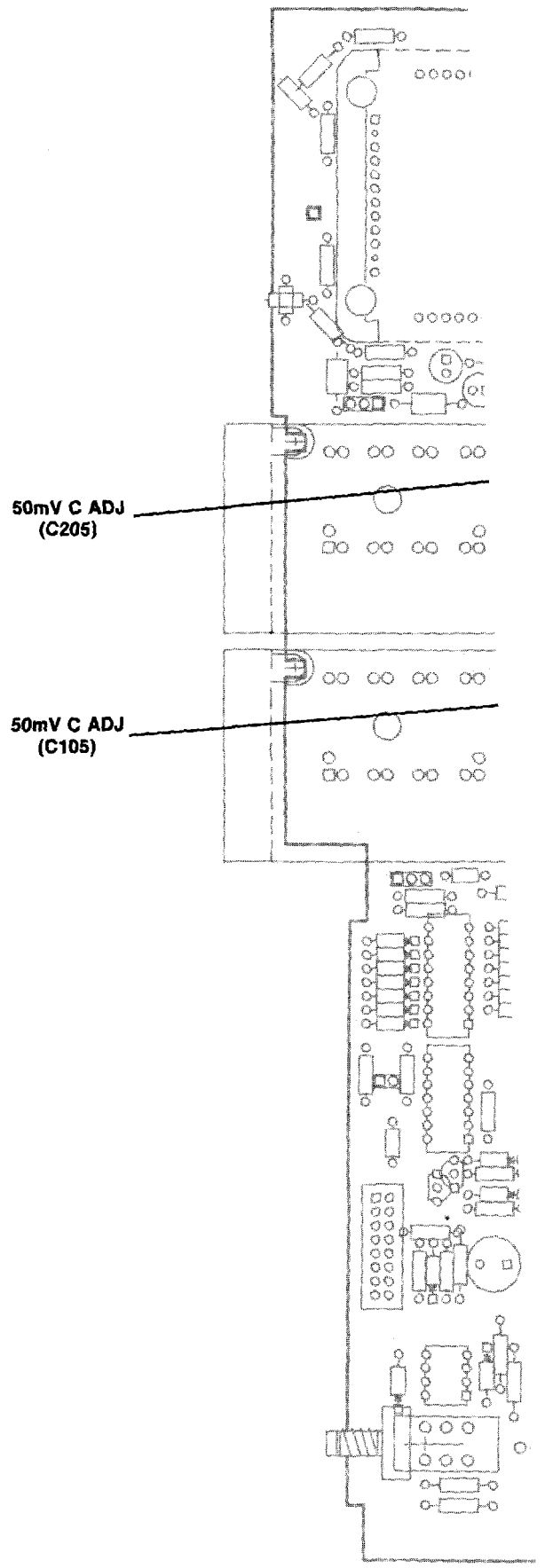
50mV C ADJ
(C205)
50mV C ADJ
(C105)

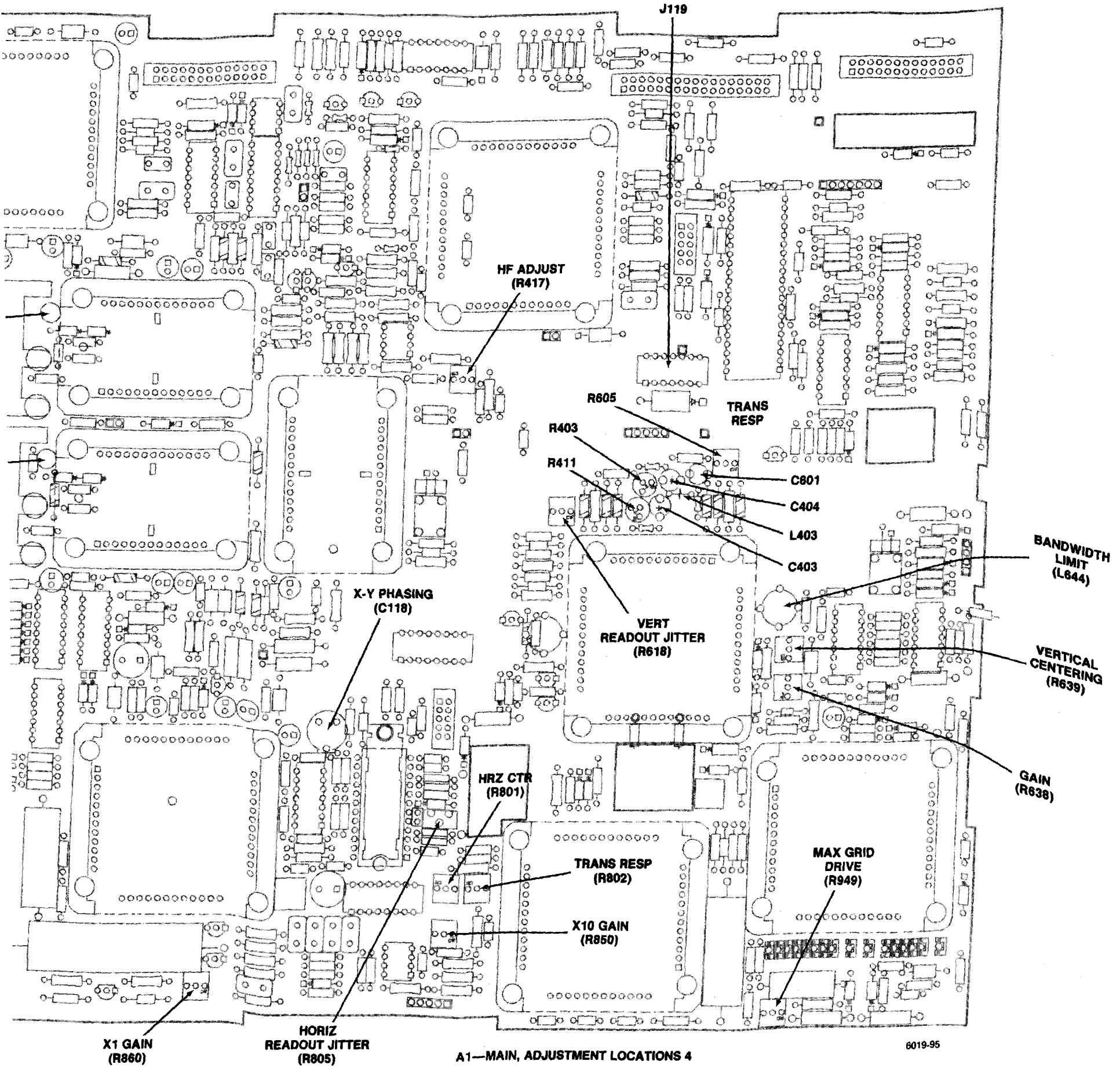

A1—MAIN, ADJUSTMENT LOCATIONS 4

PRELIMINARY TROUBLESHOOTING

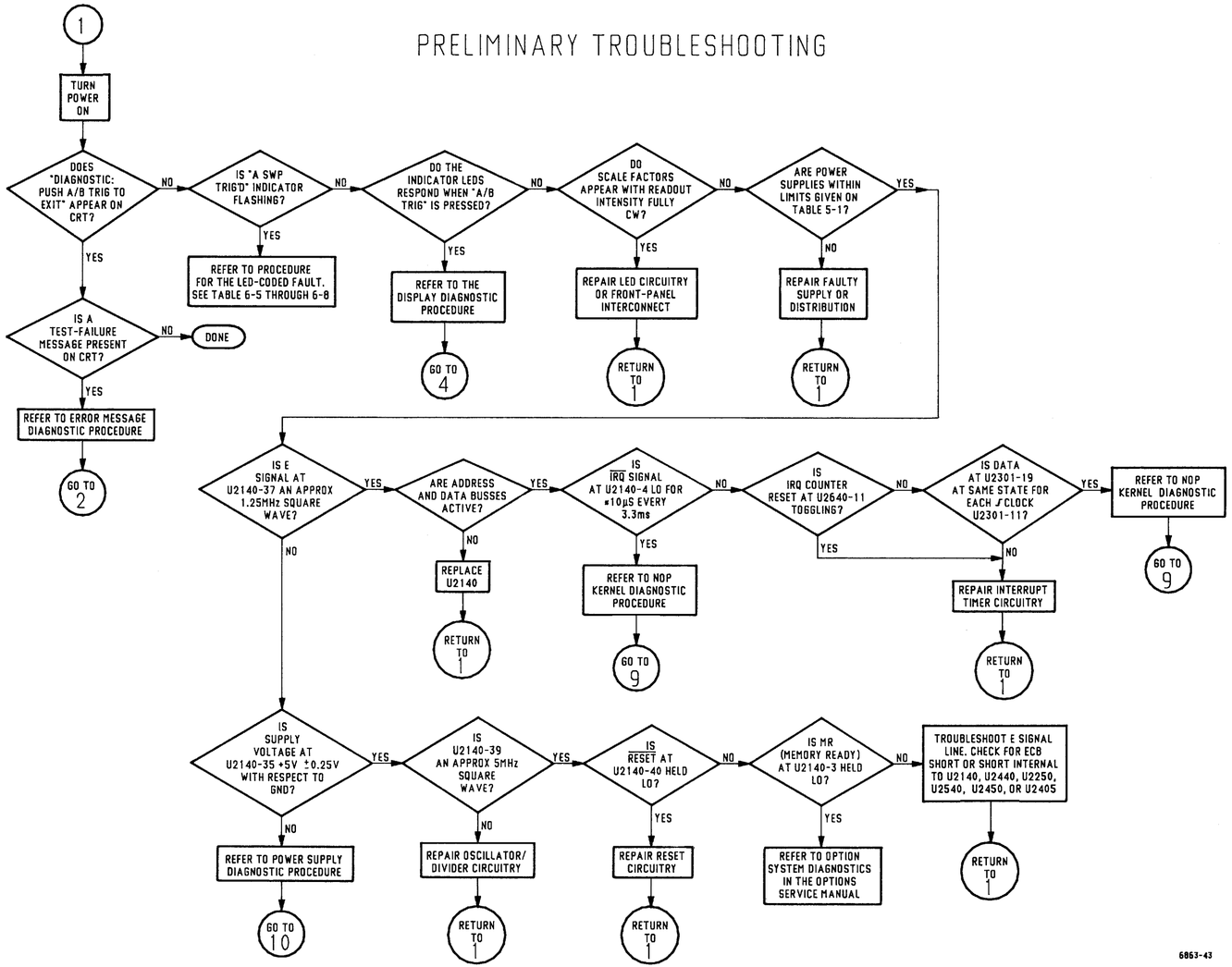

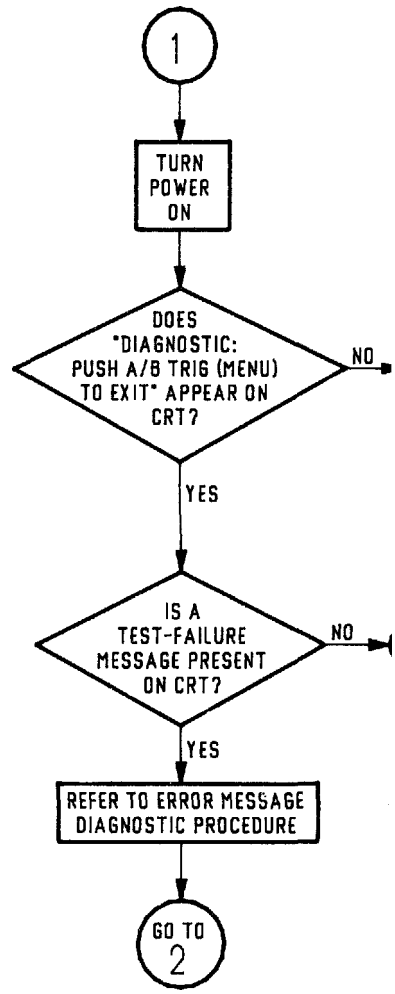
1
TURN POWER ON
DOES "DIAGNOSTIC: PUSH A/B TRIG (MENU) TO EXIT" APPEAR ON CRT?
NO
YES
IS A TEST-FAILURE MESSAGE PRESENT ON CRT?
NO
YES
REFER TO ERROR MESSAGE DIAGNOSTIC PROCEDURE
GO TO 2

PRELIMINARY TROUBLESHOOTING

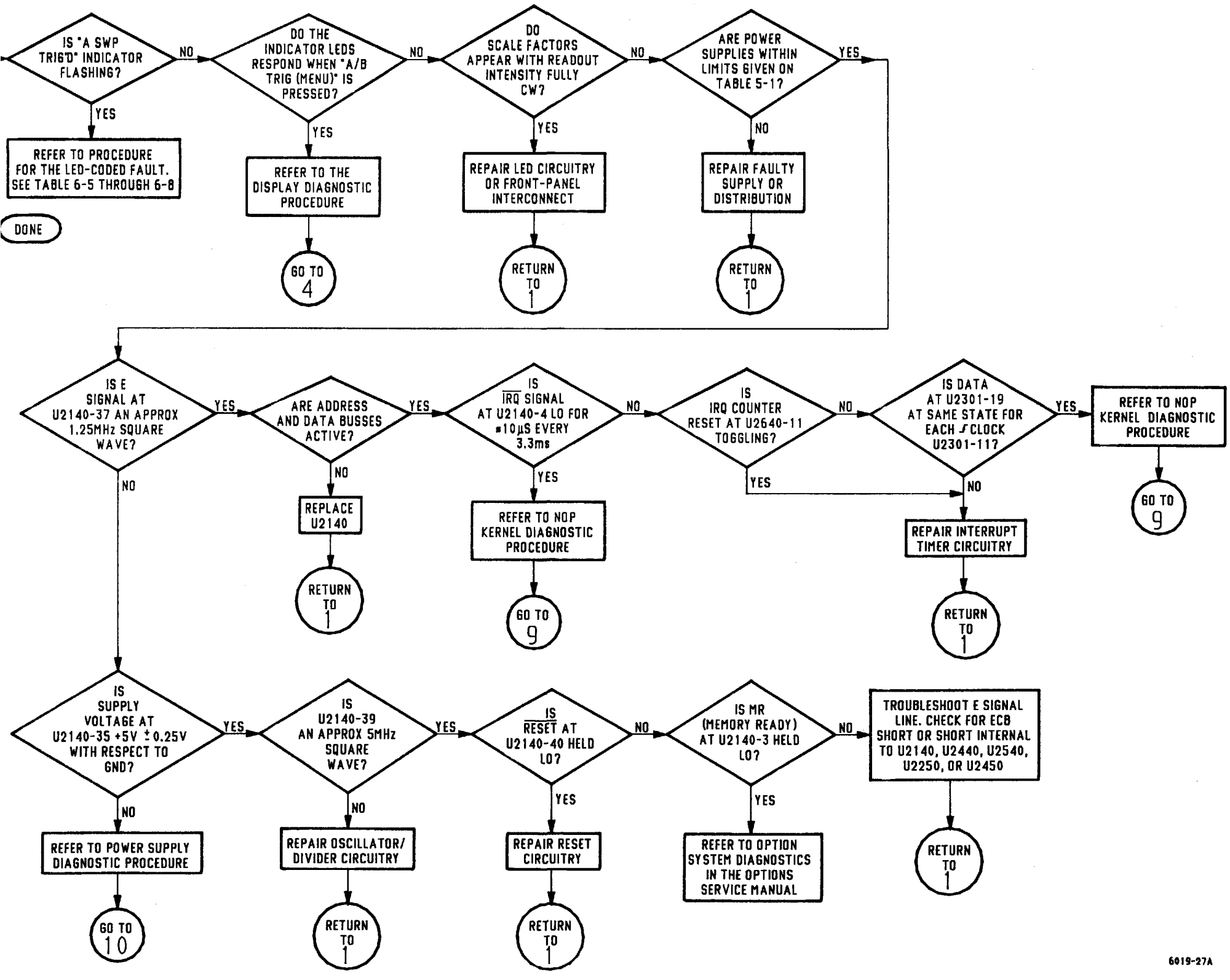

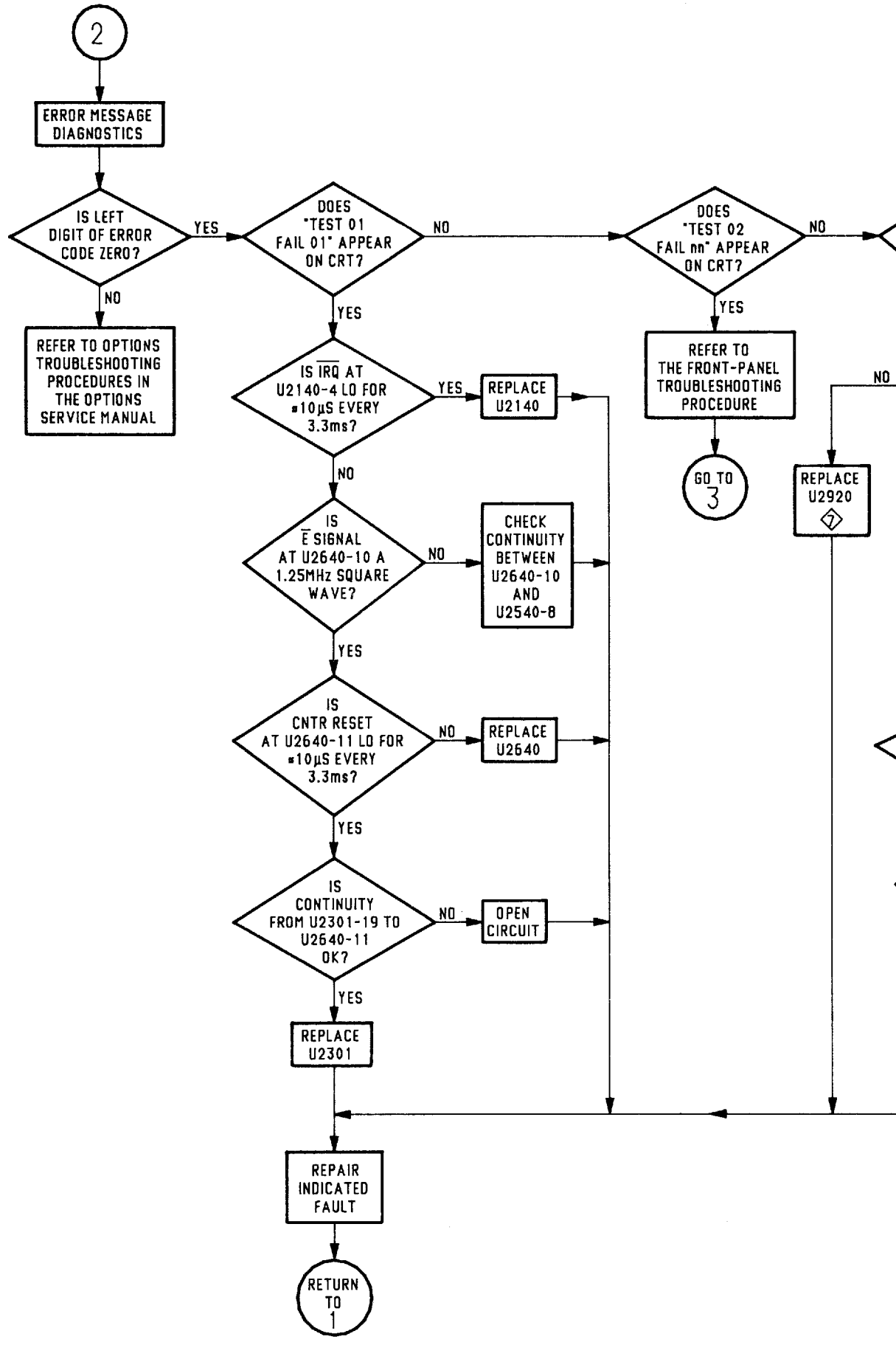
2
ERROR MESSAGE DIAGNOSTICS
IS LEFT DIGIT OF ERROR CODE ZERO?
YES
NO
REFER TO OPTIONS TROUBLESHOOTING PROCEDURES IN THE OPTIONS SERVICE MANUAL
DOES "TEST 01 FAIL 01" APPEAR ON CRT?
NO
YES
IS IRQ AT U2140-4 LO FOR ≈10µS EVERY 3.3ms?
YES
REPLACE U2140
NO
IS Ē SIGNAL AT U2640-10 A 1.25MHz SQUARE WAVE?
NO
CHECK CONTINUITY BETWEEN U2640-10 AND U2540-8
YES
IS CNTR RESET AT U2640-11 LO FOR ≈10µS EVERY 3.3ms?
NO
REPLACE U2640
YES
IS CONTINUITY FROM U2301-19 TO U2640-11 OK?
NO
OPEN CIRCUIT
YES
REPLACE U2301
DOES "TEST 02 FAIL nn" APPEAR ON CRT?
NO
YES
REFER TO THE FRONT-PANEL TROUBLESHOOTING PROCEDURE
GO TO 3
NO
REPLACE U2920
7
REPAIR INDICATED FAULT
RETURN TO 1

ERROR MESSAGE DIAGNOSTICS

NOTE

REFER TO PAGES 6-10 TROUGH 6-15, OF MAINTENANCE SECTION, FOR DETAILED INFORMATION ON DIAGNOSTIC ROUTINES.

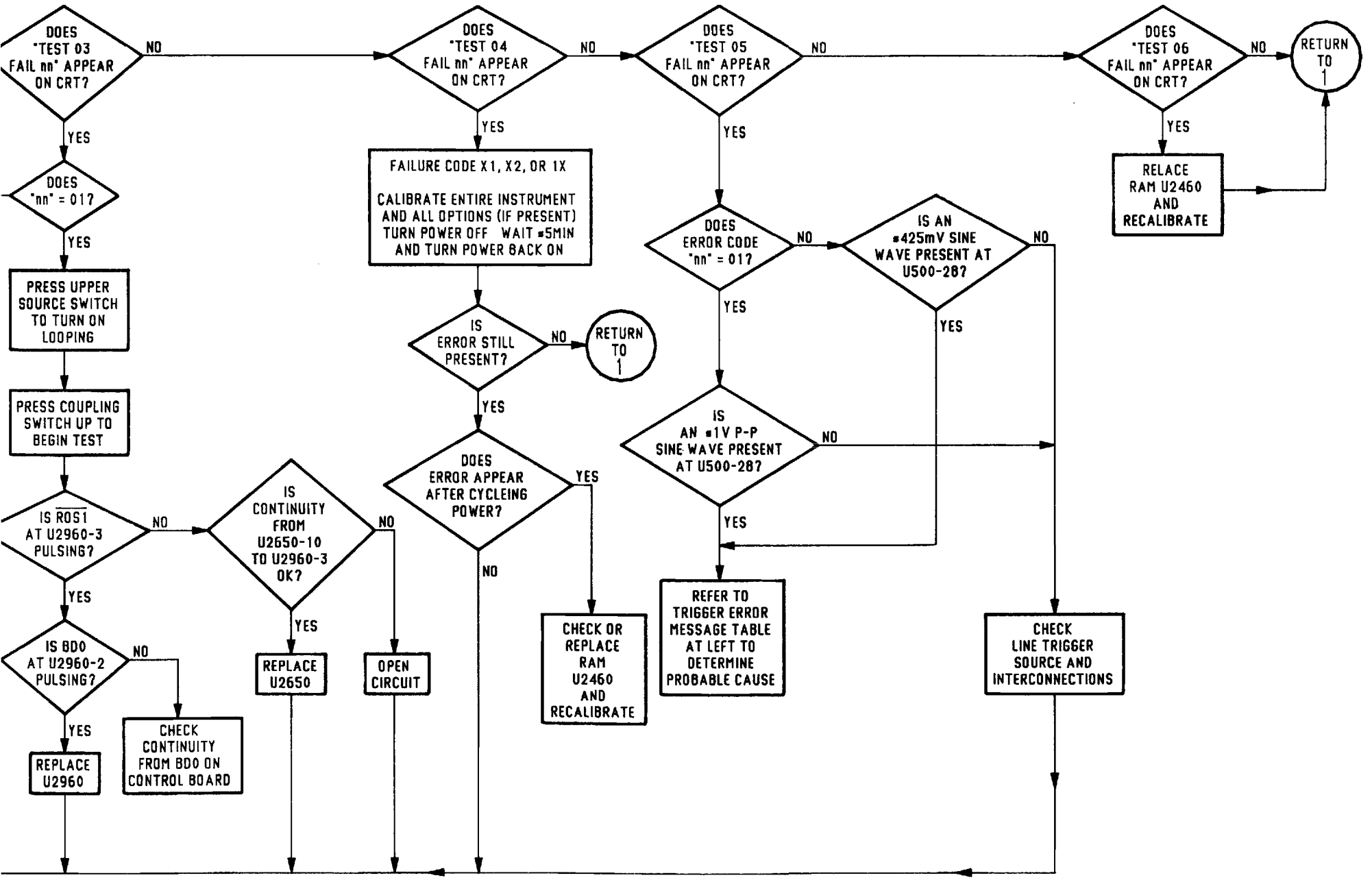

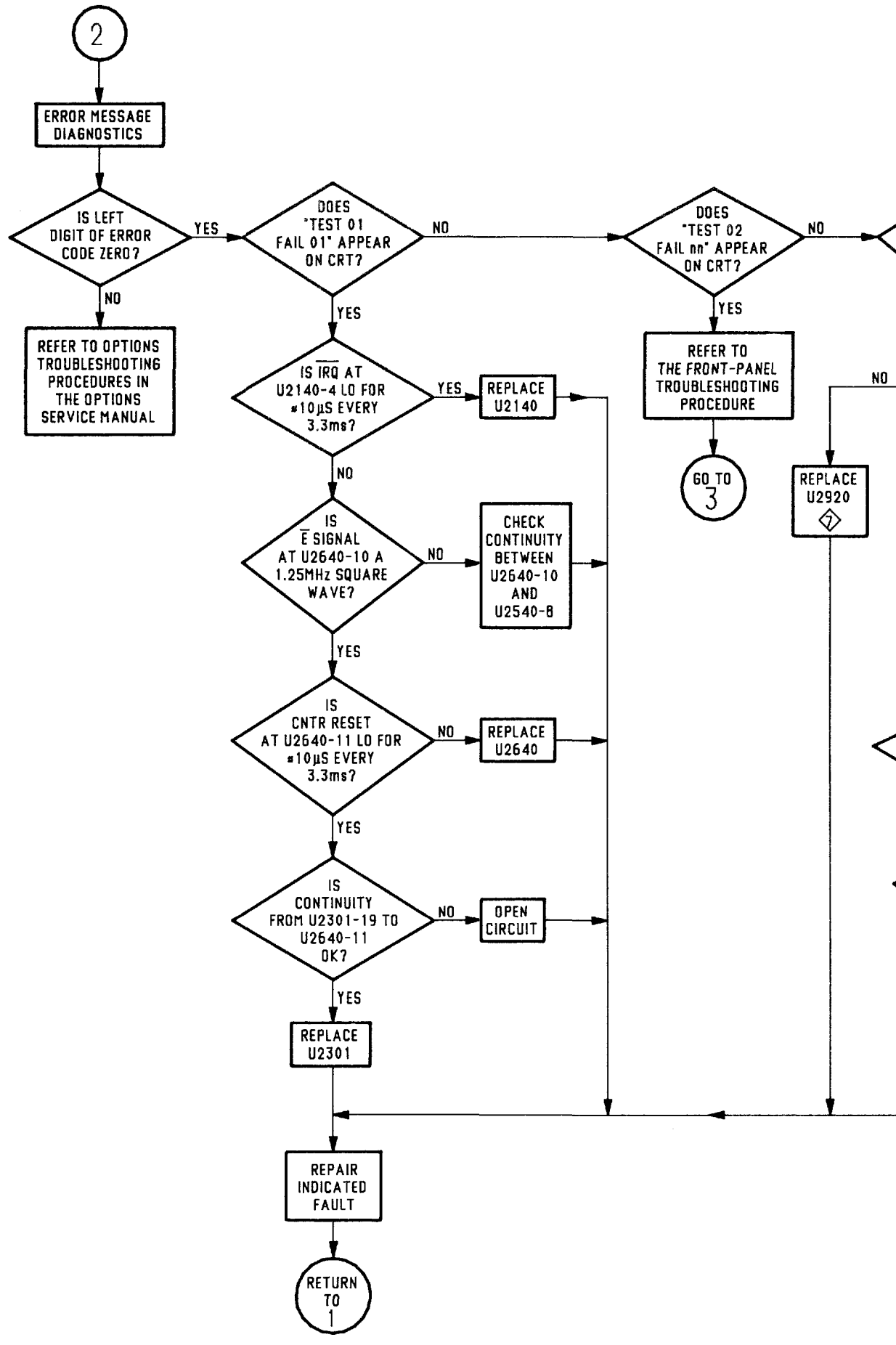
2
ERROR MESSAGE DIAGNOSTICS
IS LEFT DIGIT OF ERROR CODE ZERO?
YES
NO
REFER TO OPTIONS TROUBLESHOOTING PROCEDURES IN THE OPTIONS SERVICE MANUAL
DOES "TEST 01 FAIL 01" APPEAR ON CRT?
NO
YES
IS IRQ AT U2140-4 LO FOR ≈10µS EVERY 3.3ms?
YES
REPLACE U2140
NO
IS E SIGNAL AT U2640-10 A 1.25MHz SQUARE WAVE?
NO
CHECK CONTINUITY BETWEEN U2640-10 AND U2540-8
YES
IS CNTR RESET AT U2640-11 LO FOR ≈10µS EVERY 3.3ms?
NO
REPLACE U2640
YES
IS CONTINUITY FROM U2301-19 TO U2640-11 OK?
NO
OPEN CIRCUIT
YES
REPLACE U2301
DOES "TEST 02 FAIL nn" APPEAR ON CRT?
NO
YES
REFER TO THE FRONT-PANEL TROUBLESHOOTING PROCEDURE
GO TO 3
NO
REPLACE U2920
7
REPAIR INDICATED FAULT
RETURN TO 1

ERROR MESSAGE DIAGNOSTICS

NOTE

REFER TO PAGES 6-10 TROUGH 6-15, OF MAINTENANCE SECTION, FOR DETAILED INFORMATION ON DIAGNOSTIC ROUTINES.

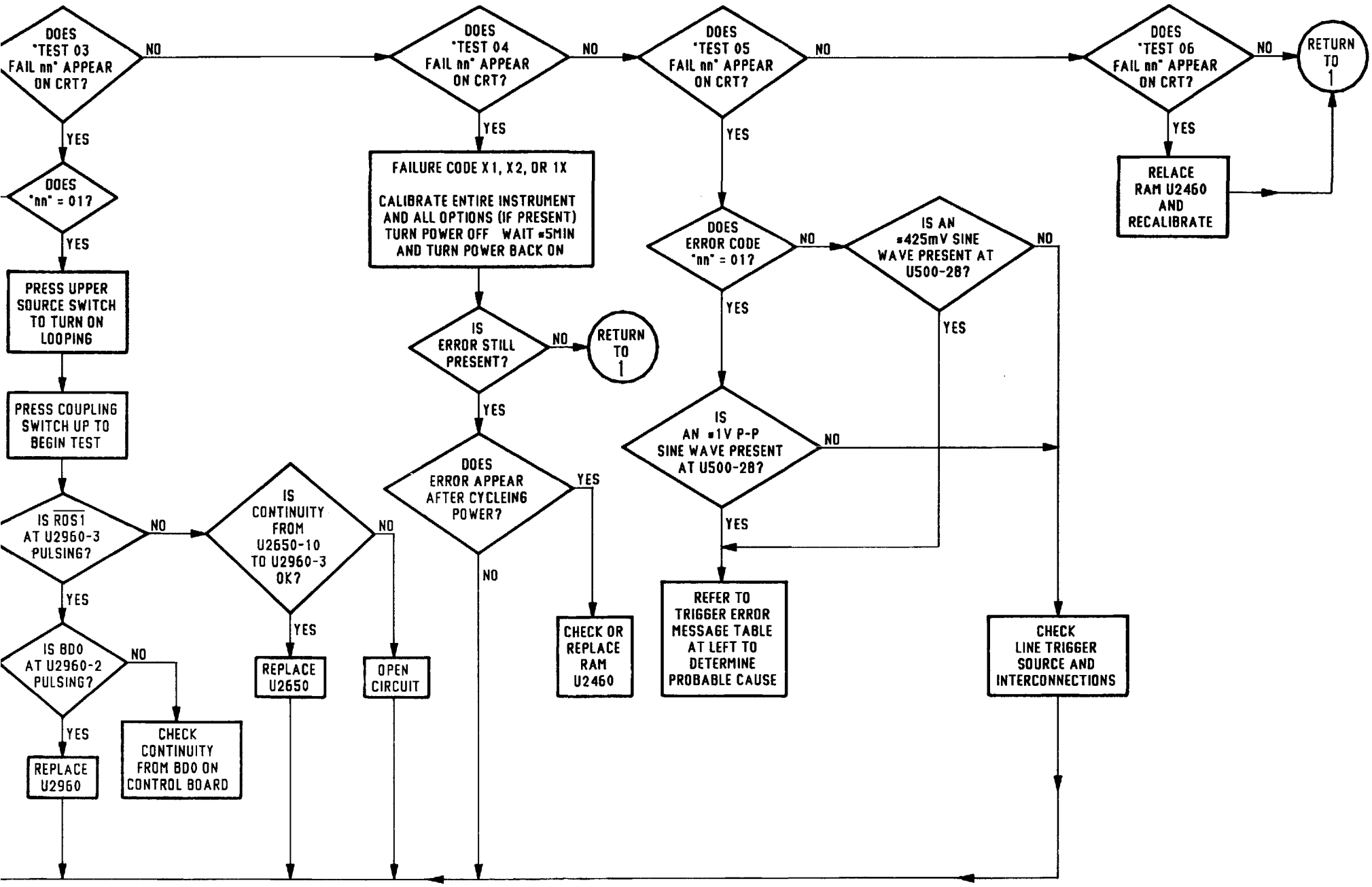

6863-44

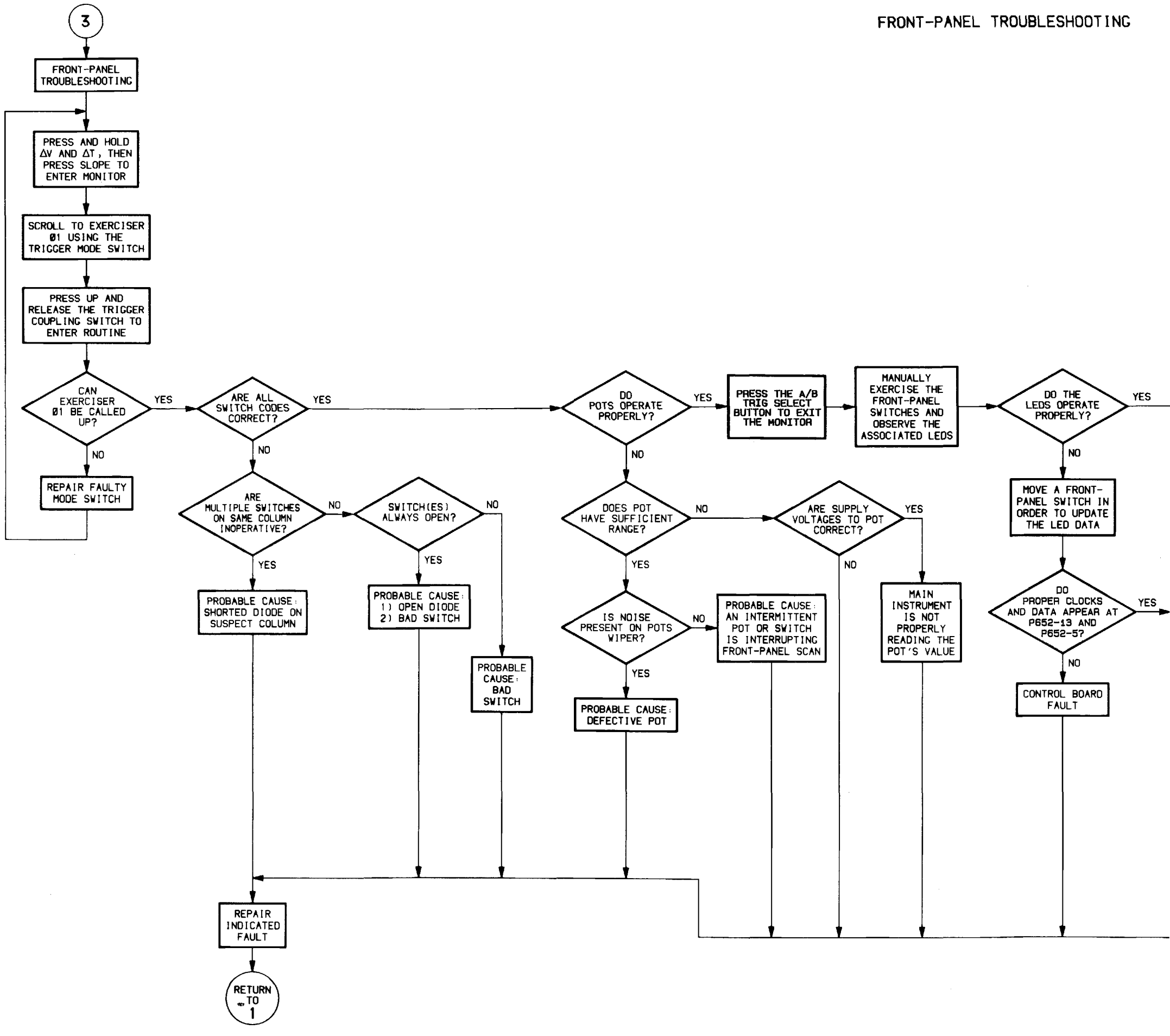
3
FRONT-PANEL TROUBLESHOOTING
PRESS AND HOLD ΔV AND ΔT, THEN PRESS SLOPE TO ENTER MONITOR
SCROLL TO EXERCISER Ø1 USING THE TRIGGER MODE SWITCH
PRESS UP AND RELEASE THE TRIGGER COUPLING SWITCH TO ENTER ROUTINE
CAN EXERCISER Ø1 BE CALLED UP?
YES
NO
REPAIR FAULTY MODE SWITCH
ARE ALL SWITCH CODES CORRECT?
YES
NO
ARE MULTIPLE SWITCHES ON SAME COLUMN INOPERATIVE?
NO
YES
PROBABLE CAUSE: SHORTED DIODE ON SUSPECT COLUMN
SWITCH(ES) ALWAYS OPEN?
NO
YES
PROBABLE CAUSE: 1) OPEN DIODE 2) BAD SWITCH
PROBABLE CAUSE: BAD SWITCH
DO POTS OPERATE PROPERLY?
YES
NO
DOES POT HAVE SUFFICIENT RANGE?
NO
YES
ARE SUPPLY VOLTAGES TO POT CORRECT?
YES
NO
IS NOISE PRESENT ON POTS WIPER?
NO
YES
PROBABLE CAUSE: AN INTERMITTENT POT OR SWITCH IS INTERRUPTING FRONT-PANEL SCAN
PROBABLE CAUSE: DEFECTIVE POT
MAIN INSTRUMENT IS NOT PROPERLY READING THE POT'S VALUE
PRESS THE A/B TRIG SELECT BUTTON TO EXIT THE MONITOR
MANUALLY EXERCISE THE FRONT-PANEL SWITCHES AND OBSERVE THE ASSOCIATED LEDS
DO THE LEDS OPERATE PROPERLY?
YES
NO
MOVE A FRONT-PANEL SWITCH IN ORDER TO UPDATE THE LED DATA
DO PROPER CLOCKS AND DATA APPEAR AT P652-13 AND P652-5?
YES
NO
CONTROL BOARD FAULT
REPAIR INDICATED FAULT
RETURN TO 1

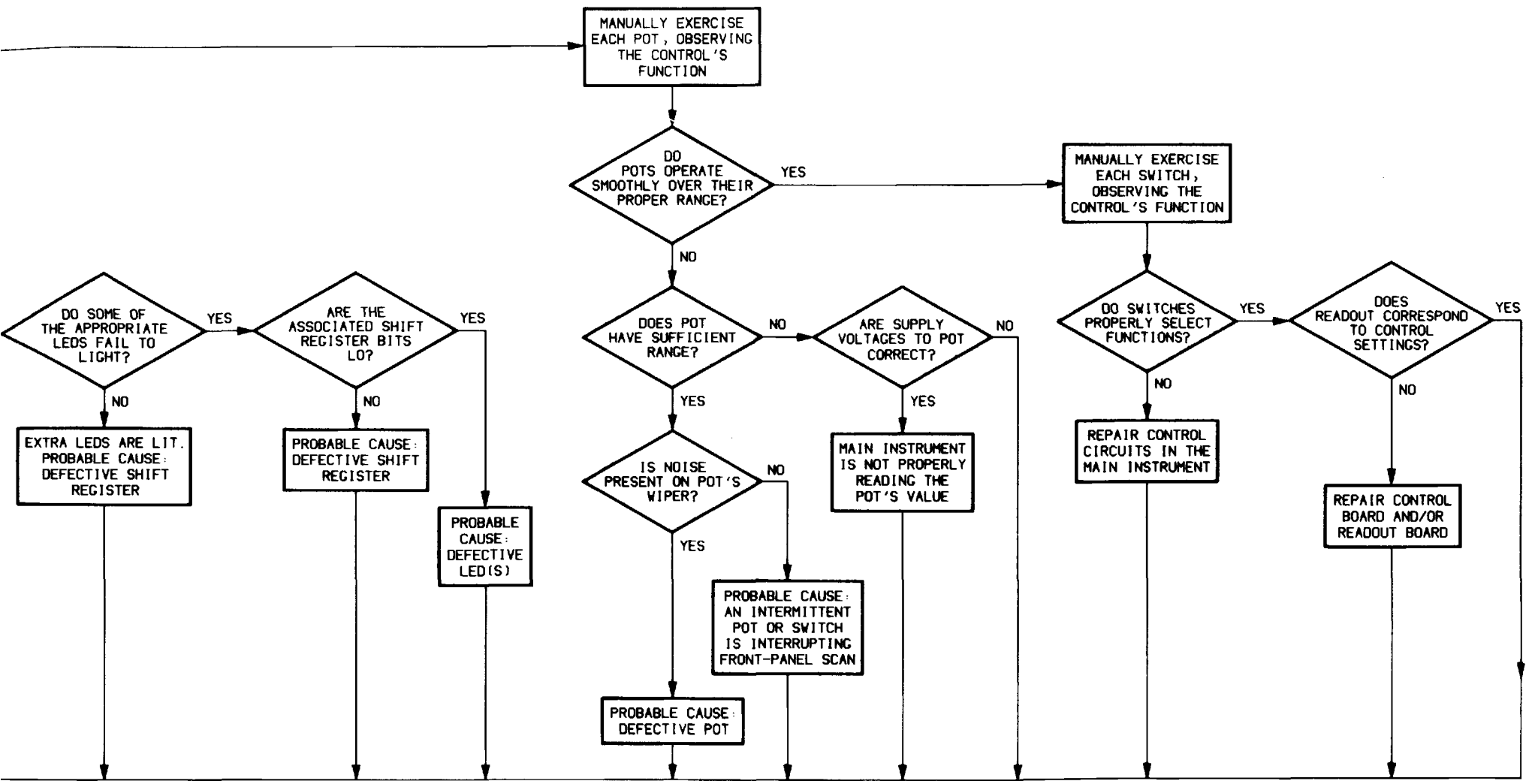
MANUALLY EXERCISE EACH POT, OBSERVING THE CONTROL'S FUNCTION
DO POTS OPERATE SMOOTHLY OVER THEIR PROPER RANGE?
YES
NO
MANUALLY EXERCISE EACH SWITCH, OBSERVING THE CONTROL'S FUNCTION
DO SOME OF THE APPROPRIATE LEDS FAIL TO LIGHT?
YES
NO
EXTRA LEDS ARE LIT. PROBABLE CAUSE: DEFECTIVE SHIFT REGISTER
ARE THE ASSOCIATED SHIFT REGISTER BITS LO?
YES
NO
PROBABLE CAUSE: DEFECTIVE SHIFT REGISTER
PROBABLE CAUSE: DEFECTIVE LED(S)
DOES POT HAVE SUFFICIENT RANGE?
NO
YES
ARE SUPPLY VOLTAGES TO POT CORRECT?
NO
YES
MAIN INSTRUMENT IS NOT PROPERLY READING THE POT'S VALUE
IS NOISE PRESENT ON POT'S WIPER?
NO
YES
PROBABLE CAUSE: AN INTERMITTENT POT OR SWITCH IS INTERRUPTING FRONT-PANEL SCAN
PROBABLE CAUSE: DEFECTIVE POT
DO SWITCHES PROPERLY SELECT FUNCTIONS?
YES
NO
REPAIR CONTROL CIRCUITS IN THE MAIN INSTRUMENT
DOES READOUT CORRESPOND TO CONTROL SETTINGS?
YES
NO
REPAIR CONTROL BOARD AND/OR READOUT BOARD

6019-29A

DISPLAY DIAGNOSTIC

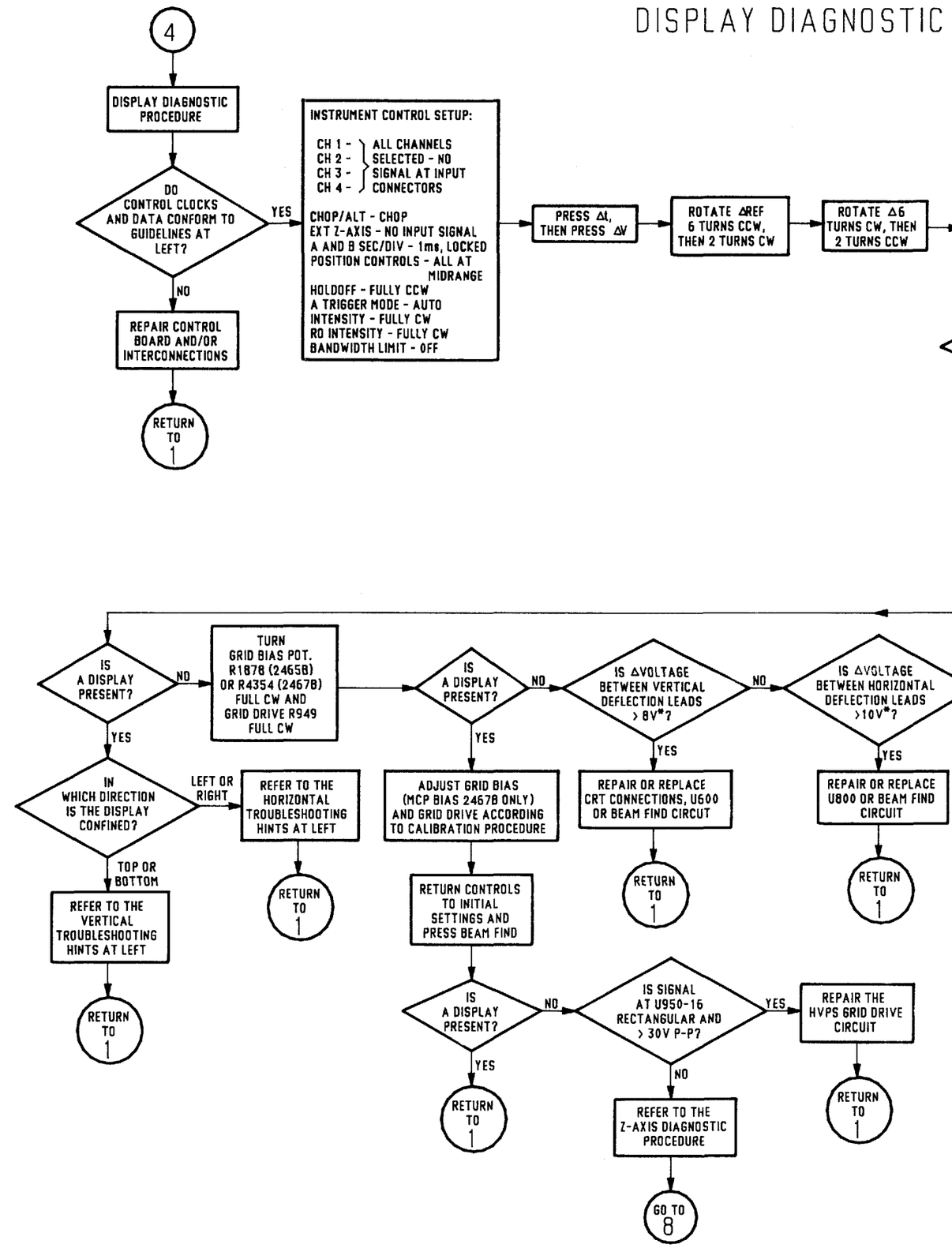

PROCEDURE

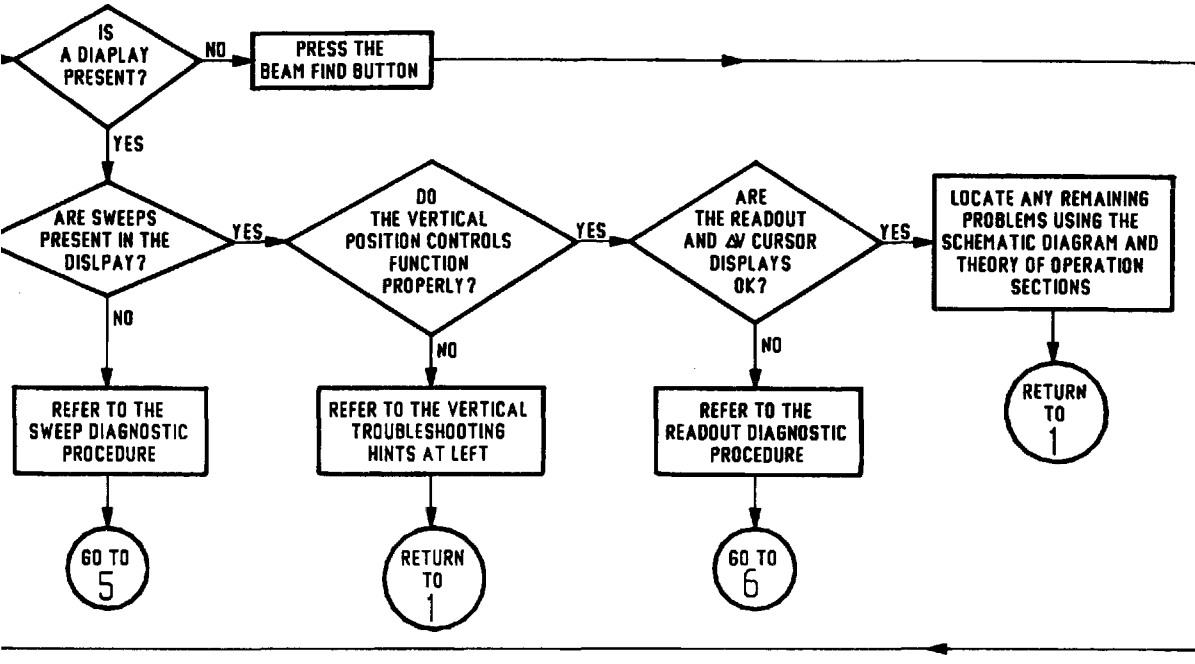

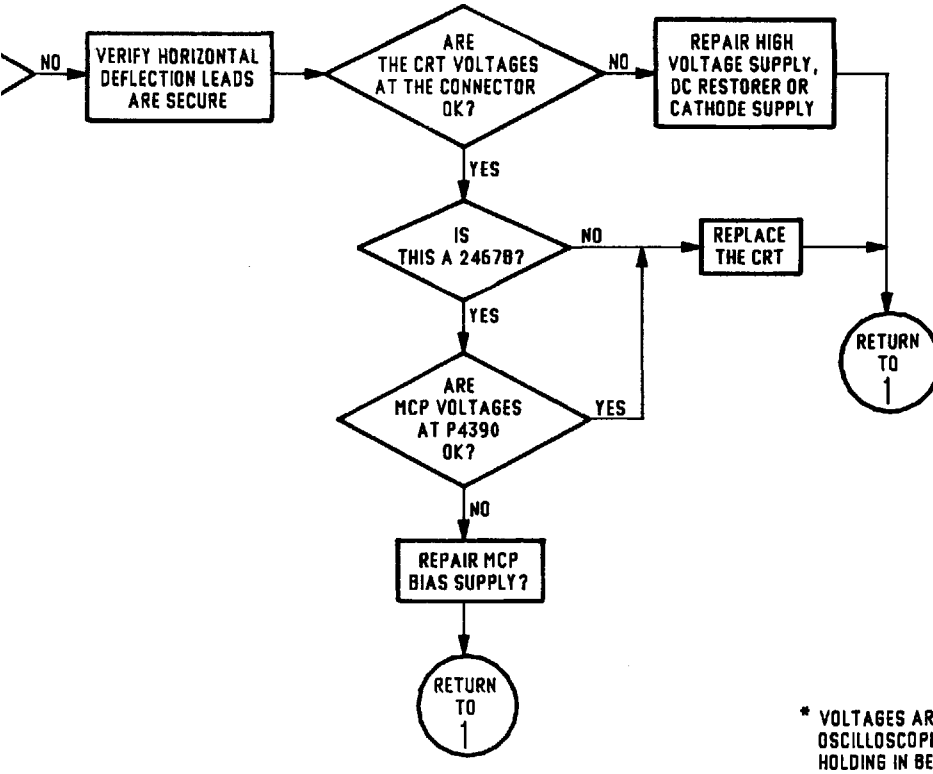

* VOLTAGES ARE MEASURED USING A TEST OSCILLOSCOPE WITH X10 PROBES WHILE HOLDING IN BEAM FIND BUTTON

6863-35A

Sweep Troubleshooting

STATE	PROBABLE CAUSES
1	Trigger signal or Trigger circuit.
2	$\overline{\text{AUXTRIG}}$ input, U700 or U900 pin 3, HI (>3.56 V), or Sweep circuit.
3	Timing current supply to ITREF input (U700 or U900 pin 24). Current mirror comprising U910 and the IT, ITRR, ITF, and ITR terminals (U700 or U900 pins 12-15). Sweep circuit, U700 or U900.
4	(Floating between −1.25 V and +1.4 V): See state 3.
5	Sweep circuit, U700 or U900. Temporarily exchange U700 and U900.
6	**NOTE:** In state 6, the sweep will recover to −1.25 V, even though THO (or $\overline{\text{DG-THOB}}$) remains LO. A Sweep: $\overline{\text{SGA}}$ path to U650, U650 response to $\overline{\text{SGA}}$, or THO path. B Sweep: $\overline{\text{DG}}$ path or generation in U700 (if B Sweep stuck in state 6).
7	**NOTE:** If trigger is in a free-run mode, state 8 follows state 6 immediately. Trigger circuit response to THOA or THOB.
8	THO timer: circuits between U165C and U650 inclusive (A Sweep). Normal rest state for B Sweep.

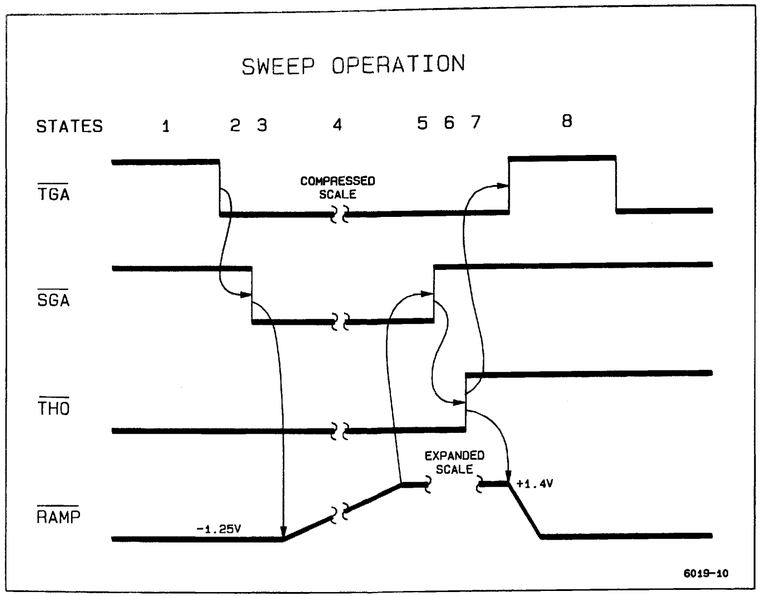

The following state table, and timing diagram show the sequence of events from initiation through the execution of the A sweep. They can be used to troubleshoot a non-operable sweep. If no sweep is present, use an oscilloscope to observe control signals $\overline{\text{TGA}}$, $\overline{\text{TGB}}$, $\overline{\text{SGA}}$, $\overline{\text{SGB}}$, THO, $\overline{\text{DG}}$, and the A or B SWEEP ramp. Note the condition of the signals and refer to the state table to determine where the sweep is stuck. Then, refer to the probable cause table. Probable cause is listed by sweep state.

Sweep States

State	Action	Nominal Duration at 2 μs/div	$\overline{\text{TGA}}$ or $\overline{\text{TGB}}$ (not Trigger Gate) U500-18 and U500-42	$\overline{\text{SGA}}$ or $\overline{\text{SGB}}$ (not Sweep Gate) U650-15 and U650-14	THO or $\overline{\text{DG}}$ (A or B Trigger Holdoff) U650-13	RAMP U735-9
0	Initialize (only at front-panel change).			HI with THO	HI for 5 ms (Last of three pulses in 240 ms sequence)	
1	Wait for Trigger	Indefinite	HI	HI	LO	−1.25 V
2	Initiate Sweep Gate	<20 ns	LO	HI	LO	−1.25 V
3	Initate Ramp Up	<200 ns	LO	LO	LO	−1.25 V
4	Run Ramp Up	22 μs	LO	LO	LO	Slew to +1.36 V
5	Terminate Sweep Gate	<2 μs	LO	LO	LO	+1.36 V
6	Initiate Holdoff	<100 ns	LO	HI	LO	+1.36 V
7	Reset Trigger	<10 ns	LO	HI	HI	+1.36 V
8	RESET SWEEP (Then return to state 1 or 2.)	2 μs	HI	HI	HI	Slew to −1.25 V

NOTE

When sweep free runs, as in AUTO Mode, STATES 1 and 7 are omitted and $\overline{\text{TGA}}$ remains LO in state 8.

SWEEP TOUBLESHOOTING PROCEDURE

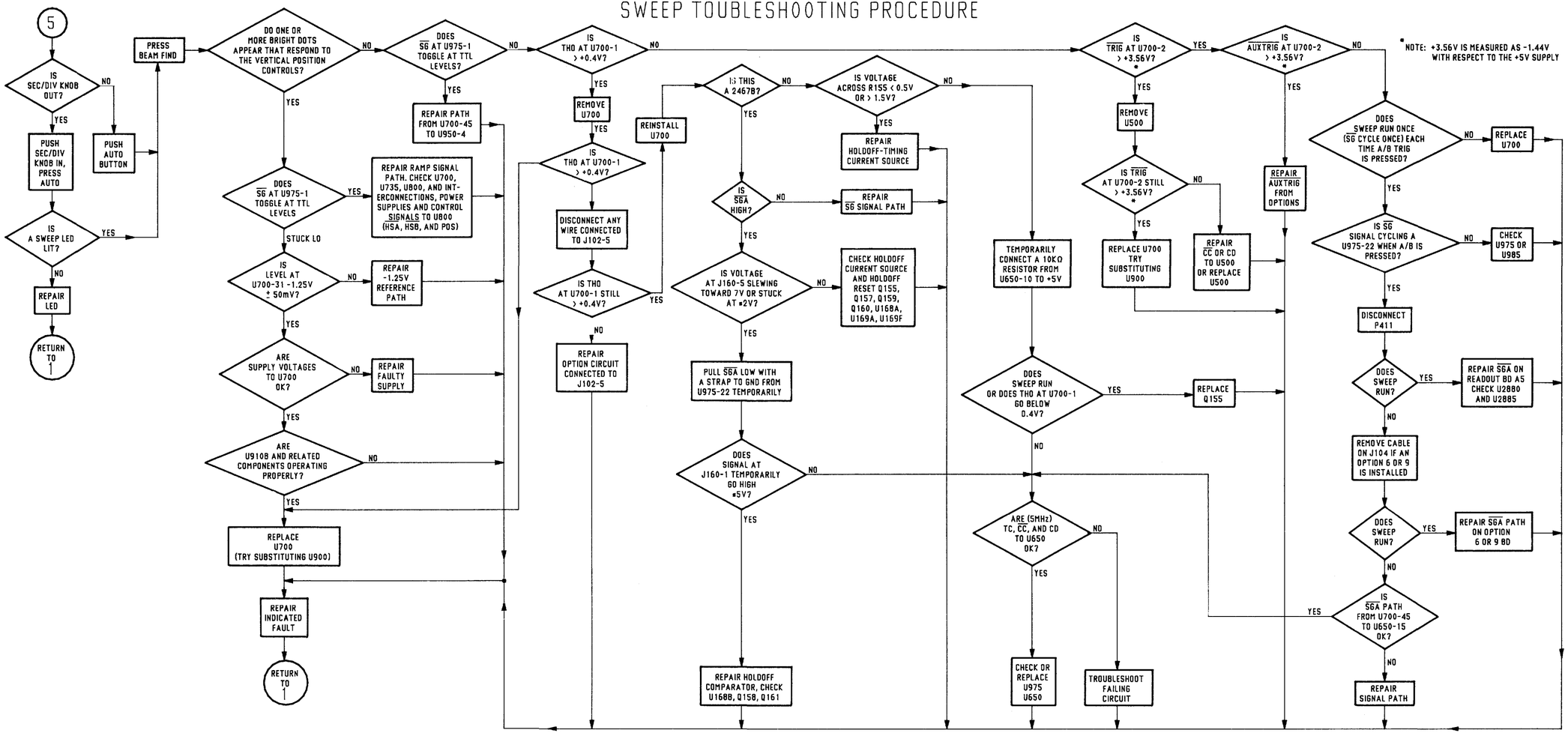

6863-46

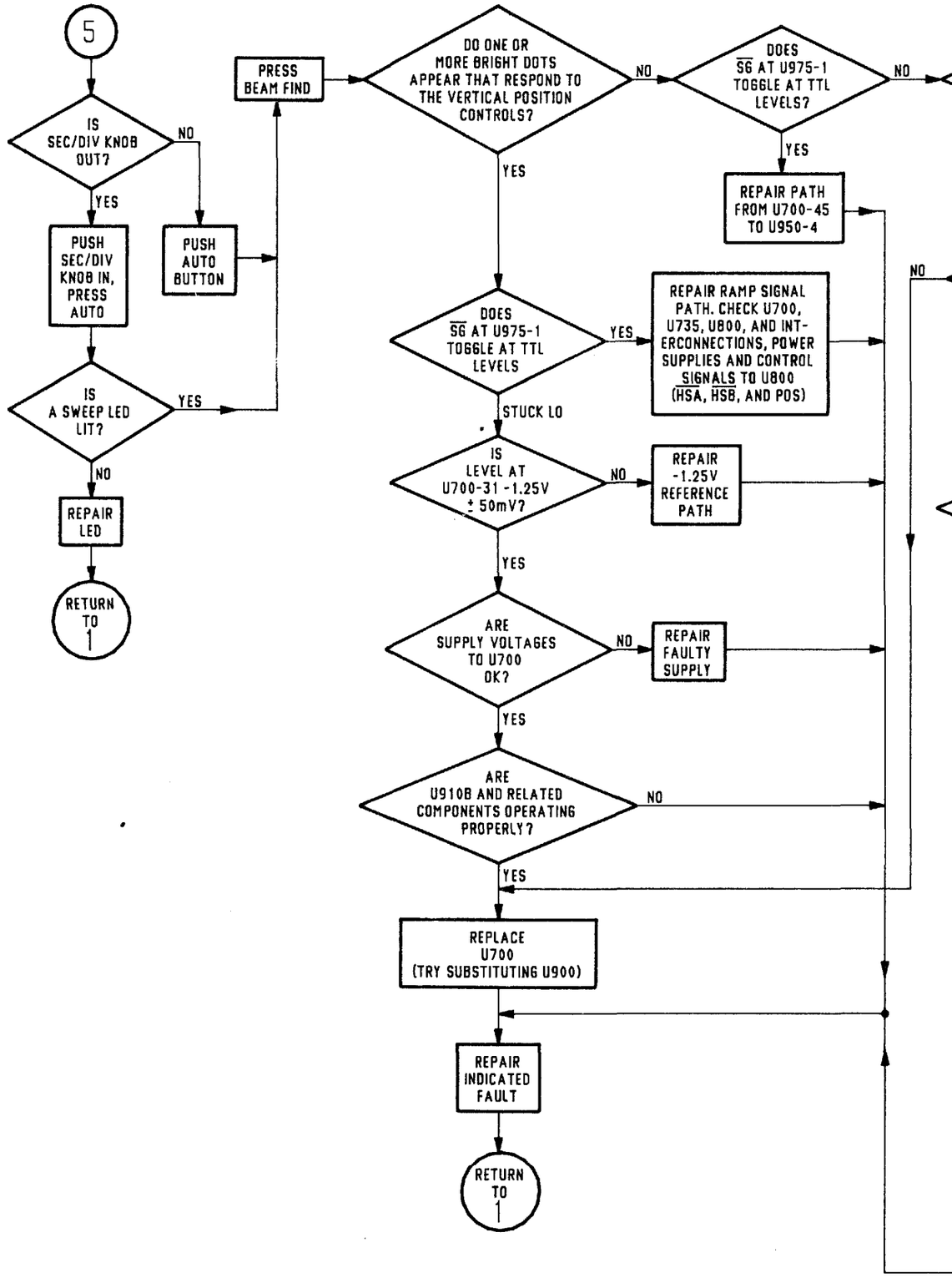
5
IS SEC/DIV KNOB OUT?
NO
YES
PUSH SEC/DIV KNOB IN, PRESS AUTO
PUSH AUTO BUTTON
IS A SWEEP LED LIT?
YES
NO
REPAIR LED
RETURN TO 1
PRESS BEAM FIND
DO ONE OR MORE BRIGHT DOTS APPEAR THAT RESPOND TO THE VERTICAL POSITION CONTROLS?
NO
YES
DOES SG AT U975-1 TOGGLE AT TTL LEVELS?
NO
YES
REPAIR PATH FROM U700-45 TO U950-4
DOES SG AT U975-1 TOGGLE AT TTL LEVELS
YES
REPAIR RAMP SIGNAL PATH. CHECK U700, U735, U800, AND INTERCONNECTIONS, POWER SUPPLIES AND CONTROL SIGNALS TO U800 (HSA, HSB, AND POS)
STUCK LO
IS LEVEL AT U700-31 -1.25V ± 50mV?
NO
REPAIR -1.25V REFERENCE PATH
YES
ARE SUPPLY VOLTAGES TO U700 OK?
NO
REPAIR FAULTY SUPPLY
YES
ARE U910B AND RELATED COMPONENTS OPERATING PROPERLY?
NO
YES
REPLACE U700 (TRY SUBSTITUTING U900)
REPAIR INDICATED FAULT
RETURN TO 1
NO

SWEEP TOUBLESHOOTING PROCEDURE

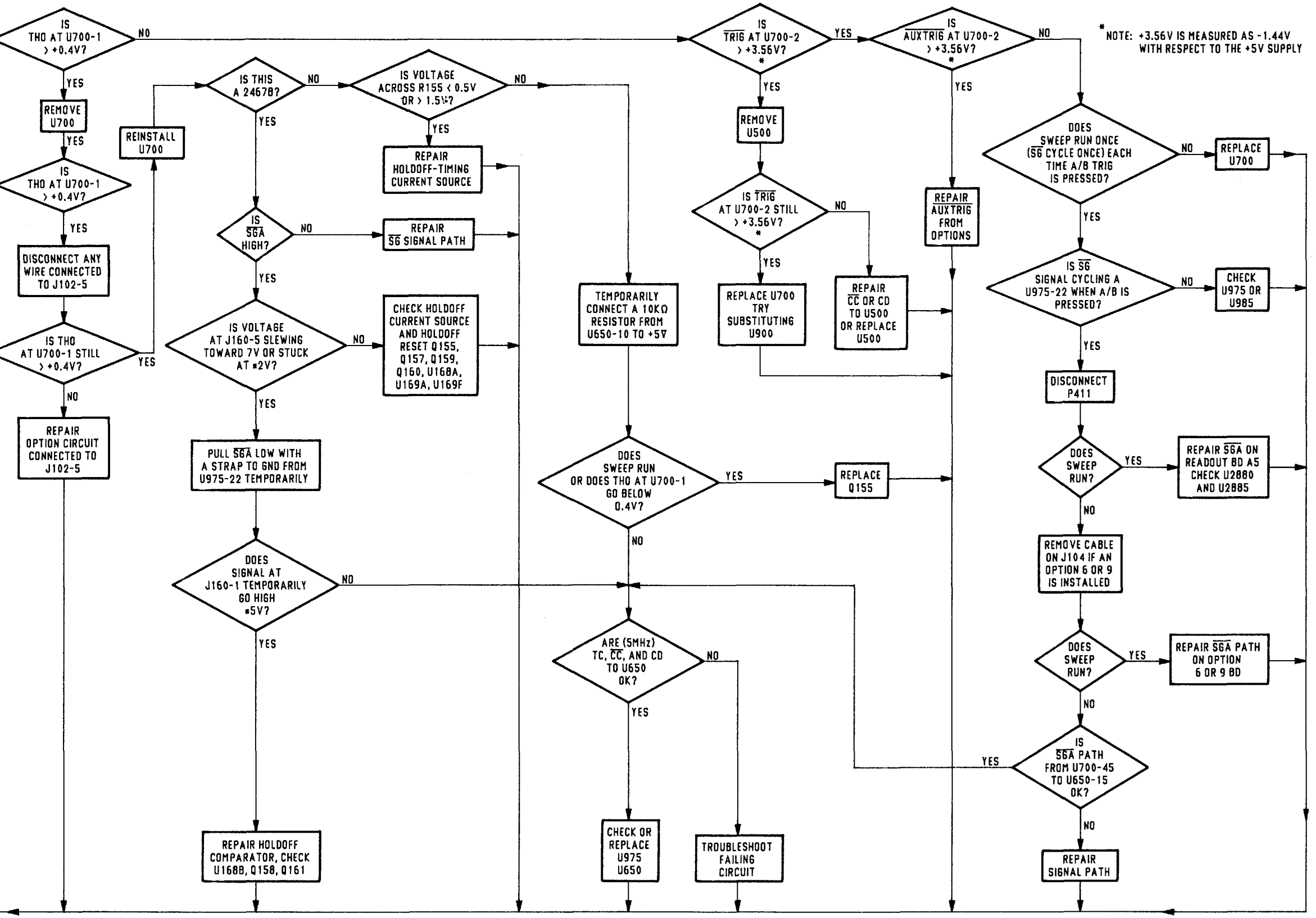

6863-37A

READOUT TROUBLESHOOTING PROCEDURE

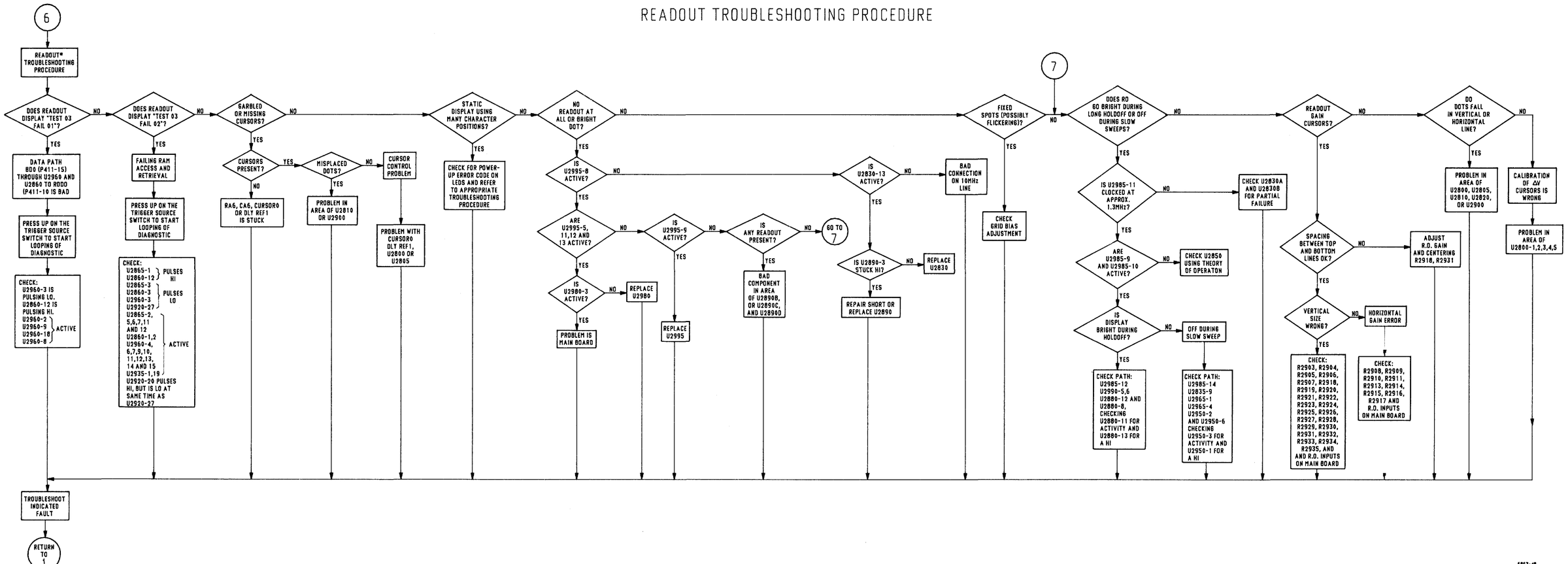

READOUT TROUBLESHOOTING PROCEDURE (SN B050000 & ABOVE) 6 & 7

6863-48

READOUT TROUBLESHOOTING PROCEDURE

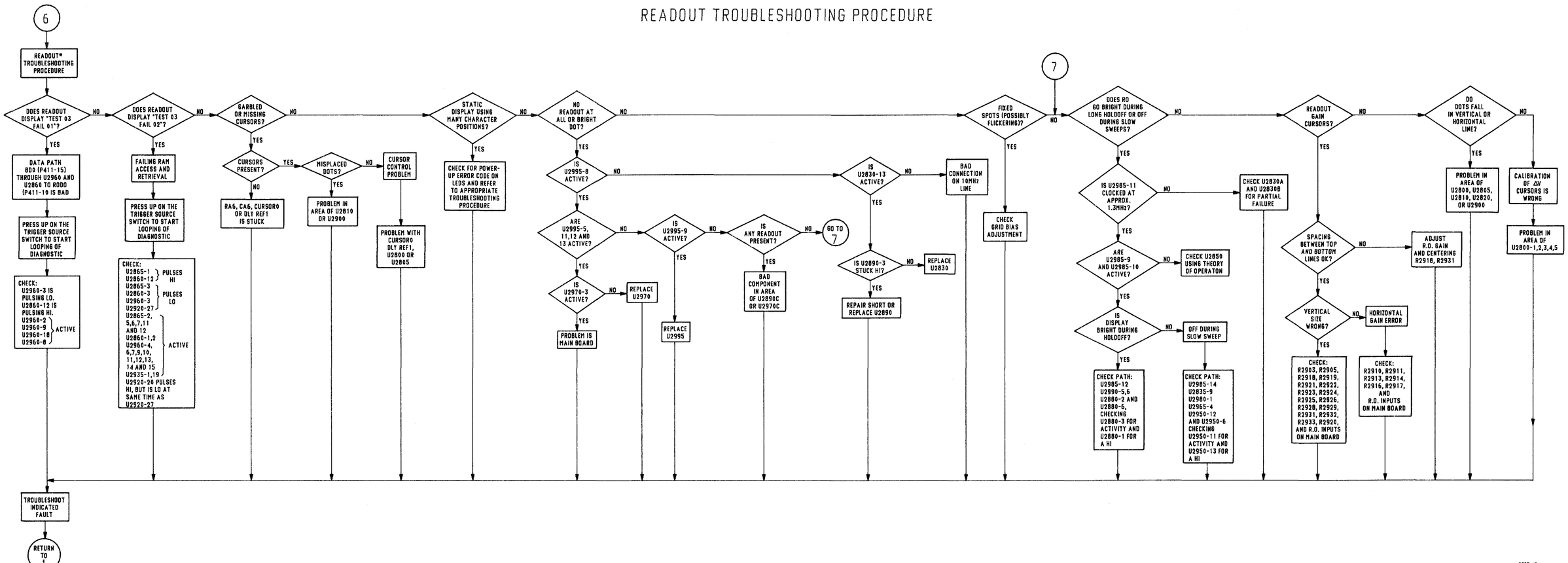

READOUT TROUBLESHOOTING PROCEDURE (SN B049999 & BELOW)

6863-47

VERTICAL TROUBLESHOOTING HINTS

With no signals connected to the four Vertical input connectors, select each channel for display and rotate its POSITION control through its entire range.

1. If one or more of the four Vertical channels properly responds to its POSITION control, the problem is in the preamp circuit of the defective channel or in the Vertical Channel Switch circuit. If none of them respond properly, the Channel Switch, Delay Line, Vertical Output Amplifier, and the Hybrid power supplies should be suspect.

2. Check the range of the input positioning voltage for a faulty channel. Channel 1 and 2 positioning inputs (pin 17 of U100 and U200) should vary between −4.6 volts and −5.26 volts. Channel 3 and 4 positioning voltages (to pins 29 and 32 of U300) should vary between ground potential and −5 volts.

3. If the faulty channel's input positioning range is okay, check the positioning effect at the outputs of the Channel Switch (connect a DMM across the Delay Line). When the CH 1 or CH 2 POSITION control is rotated through its range, the DMM reading should vary from approximately +700 mV to −700 mV; for Channels 3 and 4, it should vary approximately from +350 mV to −350 mV.

4. If the range at the Delay Line is okay, connect the DMM across the vertical outputs to the CRT (between L628 and L633). Range should vary approximately from +11.5 volts to −11.5 volts as the POSITION control of the displayed channel is rotated through its range.

5. If the output voltages to the CRT are okay, check that the voltage between the CRT termination resistors (LR1513 and LR1514) varies approximately from +11.5 volts to −11.5 volts as the POSITION control is rotated through its range.

See the "Theory of Operation" for further information.

HORIZONTAL TROUBLESHOOTING HINTS

If possible, set the instruments TRIGGER controls so the TRIG'D LED remains illuminated (triggered sweep is running). Setting the TRIGGER MODE to AUTO LVL will usually do this.

1. Check that the horizontal positioning input (pin 22 of U800) of Output IC varies approximately from −1.25 volts to +1.25 volts as the Horizontal POSITION control is rotated through its range. If it does not, repair the position circuit.

2. Check that the A Sweep Ramp at pin 18 of U800 is ramping from −1.25 volts to +1.25 volts. If it is not, check the buffer amplifier made up of U735 and its associated components. When operating properly, the voltages and waveforms at pins 3 and 9 of U735 will be nearly identical.

3. Check for proper select signals (TTL levels) at the $\overline{HSA}$ and $\overline{HSB}$ inputs of U800.

4. Check the power supply levels to U800.

5. Check the voltage on pin 6 of U800. If it is not > +80 volts, check the +OUT and −OUT pins for shorts.

See the "Theory of Operation" for further information.

HOW TO VERIFY THE CONTROL DATA AND CONTROL CLOCK LINES

1. Power up the instrument under test.

2. Move the NORM/DIAG jumper (P503 on the scope under test) to the DIAG position. This forces the processor into a NOP loop and exercises the Address Decode circuitry.

3. Trigger the test scope on the PORT 4 INH at pin 15 of U2550 (on the Control Board). Use NORM TRIGGER and − SLOPE. Set TRIGGER LEVEL to +1.4 volts.

4. Verify that sixteen bursts of sixteen pulses each occurring at 52 ms to 53 ms intervals.

5. Check that each of the outputs of U2550 has similar signals present (diagram 2).

6. Check that each output of U2650 and U2660 (diagram 2) has sixteen bursts of one pulses each occurring at 52 ms to 53 ms intervals.

7. Turn instrument power off and restore P503 to the NORM position.

8. Power up the instrument again.

9. Set the instrument's CH 1 and CH 2 input coupling to 1 MΩ DC and TRIGGER MODE to NORM.

10. Hold in the upper TRIGGER COUPLING switch.

11. Trigger the test oscilloscope on the DISP SEQ CLK (pin 7 of U2650 or pin 10 of P512).

12. With the test scope still triggered on the DISP SEQ CLK, verify that the ATTN STRB at pin 2 of P512 is eight positive-going strobes. Verify that the control data on pin 1 of P512 is toggling at TTL levels.

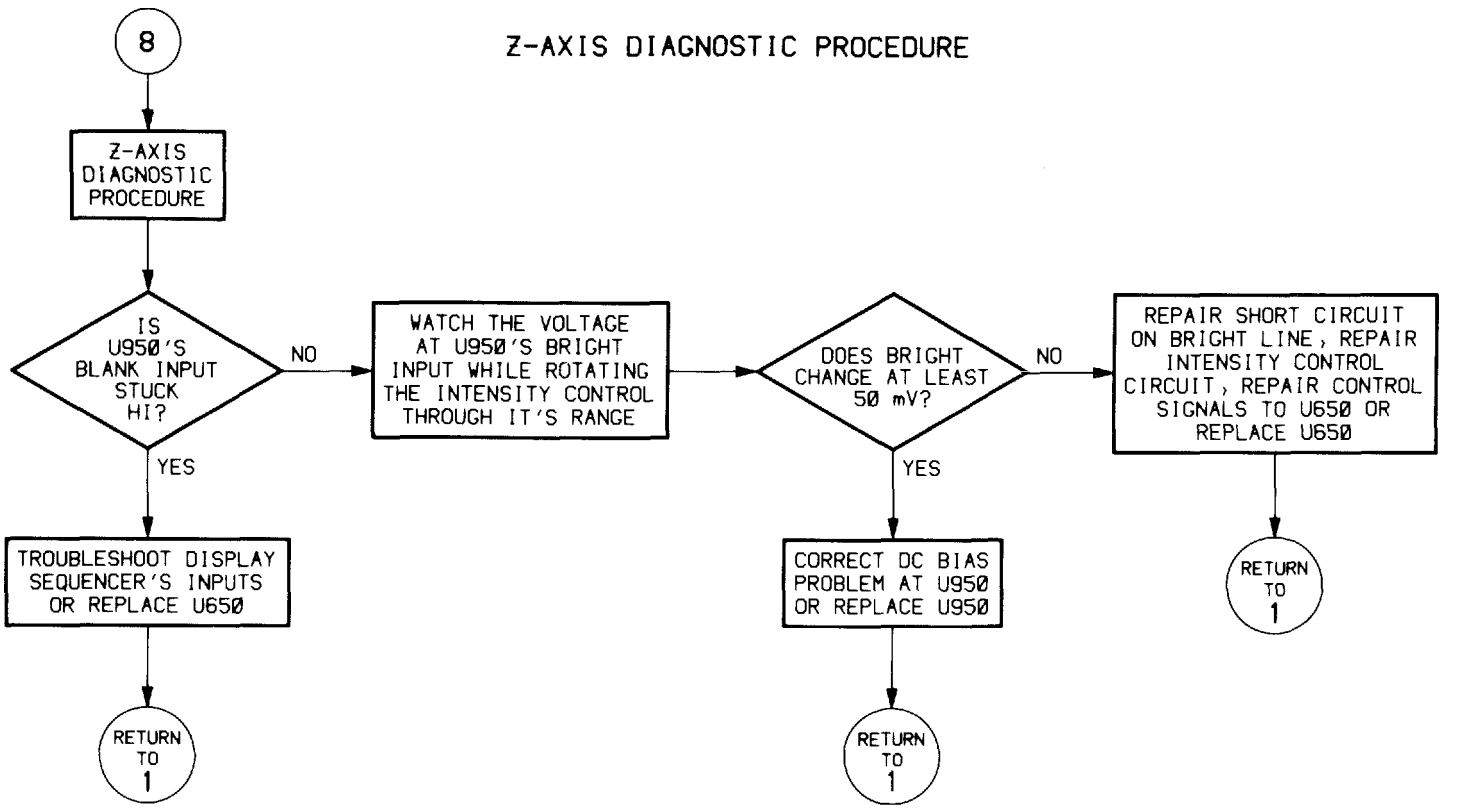

Z-AXIS DIAGNOSTIC PROCEDURE (SN B050000 & ABOVE) 8

VERTICAL TROUBLESHOOTING HINTS

With no signals connected to the four Vertical input connectors, select each channel for display and rotate its POSITION control through its entire range.

1. If one or more of the four Vertical channels properly responds to its POSITION control, the problem is in the preamp circuit of the defective channel or in the Vertical Channel Switch circuit. If none of them respond properly, the Channel Switch, Delay Line, Vertical Output Amplifier, and the Hybrid power supplies should be suspect.

2. Check the range of the input positioning voltage for a faulty channel. Channel 1 and 2 positioning inputs (pin 17 of U100 and U200) should vary between −4.6 volts and −5.26 volts. Channel 3 and 4 positioning voltages (to pins 29 and 32 of U300) should vary between ground potential and −5 volts.

3. If the faulty channel's input positioning range is okay, check the positioning effect at the outputs of the Channel Switch (connect a DMM across the Delay Line). When the CH 1 or CH 2 POSITION control is rotated through its range, the DMM reading should vary from approximately +700 mV to −700 mV; for Channels 3 and 4, it should vary approximately from +350 mV to −350 mV.

4. If the range at the Delay Line is okay, connect the DMM across the vertical outputs to the CRT (between L628 and L633). Range should vary approximately from +11.5 volts to −11.5 volts as the POSITION control of the displayed channel is rotated through its range.

5. If the output voltages to the CRT are okay, check that the voltage between the CRT termination resistors (LR1513 and LR1514) varies approximately from +11.5 volts to −11.5 volts as the POSITION control is rotated through its range.

See the "Theory of Operation" for further information.

HORIZONTAL TROUBLESHOOTING HINTS

If possible, set the instruments TRIGGER controls so the TRIG'D LED remains illuminated (triggered sweep is running). Setting the TRIGGER MODE to AUTO LVL will usually do this.

1. Check that the horizontal positioning input (pin 22 of U800) of Output IC varies approximately from −1.25 volts to +1.25 volts as the Horizontal POSITION control is rotated through its range. If it does not, repair the position circuit.

2. Check that the A Sweep Ramp at pin 18 of U800 is ramping from −1.25 volts to +1.25 volts. If it is not, check the buffer amplifier made up of U735 and its associated components. When operating properly, the voltages and waveforms at pins 3 and 9 of U735 will be nearly identical.

3. Check for proper select signals (TTL levels) at the $\overline{HSA}$ and $\overline{HSB}$ inputs of U800.

4. Check the power supply levels to U800.

5. Check the voltage on pin 6 of U800. If it is not > +80 volts, check the +OUT and −OUT pins for shorts.

See the "Theory of Operation" for further information.

HOW TO VERIFY THE CONTROL DATA AND CONTROL CLOCK LINES

1. Power up the instrument under test.

2. Move the NORM/DIAG jumper (P503 on the scope under test) to the DIAG position. This forces the processor into a NOP loop and exercises the Address Decode circuitry.

3. Trigger the test scope on the DAC MSB CLK at pin 14 of U2550 (on the Control Board). Use NORM TRIGGER and − SLOPE. Set TRIGGER LEVEL to +1.4 volts.

4. Verify that four bursts of clocks appear at 52 ms to 53 ms intervals.

5. Check that each of the outputs of U2550 has similar signals present (diagram 2).

6. Check that each output of U2660 (diagram 1) has four bursts of two pulses each occurring at 52 ms to 53 ms intervals.

7. Turn instrument power off and restore P503 to the NORM position.

8. Power up the instrument again.

9. Set the instrument's CH 1 and CH 2 input coupling to 1 MΩ DC and TRIGGER MODE to NORM.

10. Hold in the upper TRIGGER COUPLING switch.

11. Trigger the test oscilloscope on the DISP SEQ CLK (pin 8 of U2660 or pin 10 of P512).

12. With the test scope still triggered on the DISP SEQ CLK, verify that the ATTN STRB at pin 2 of P512 is eight positive-going strobes.

13. Verify that the control data on pin 1 of P512 is toggling at TTL levels.

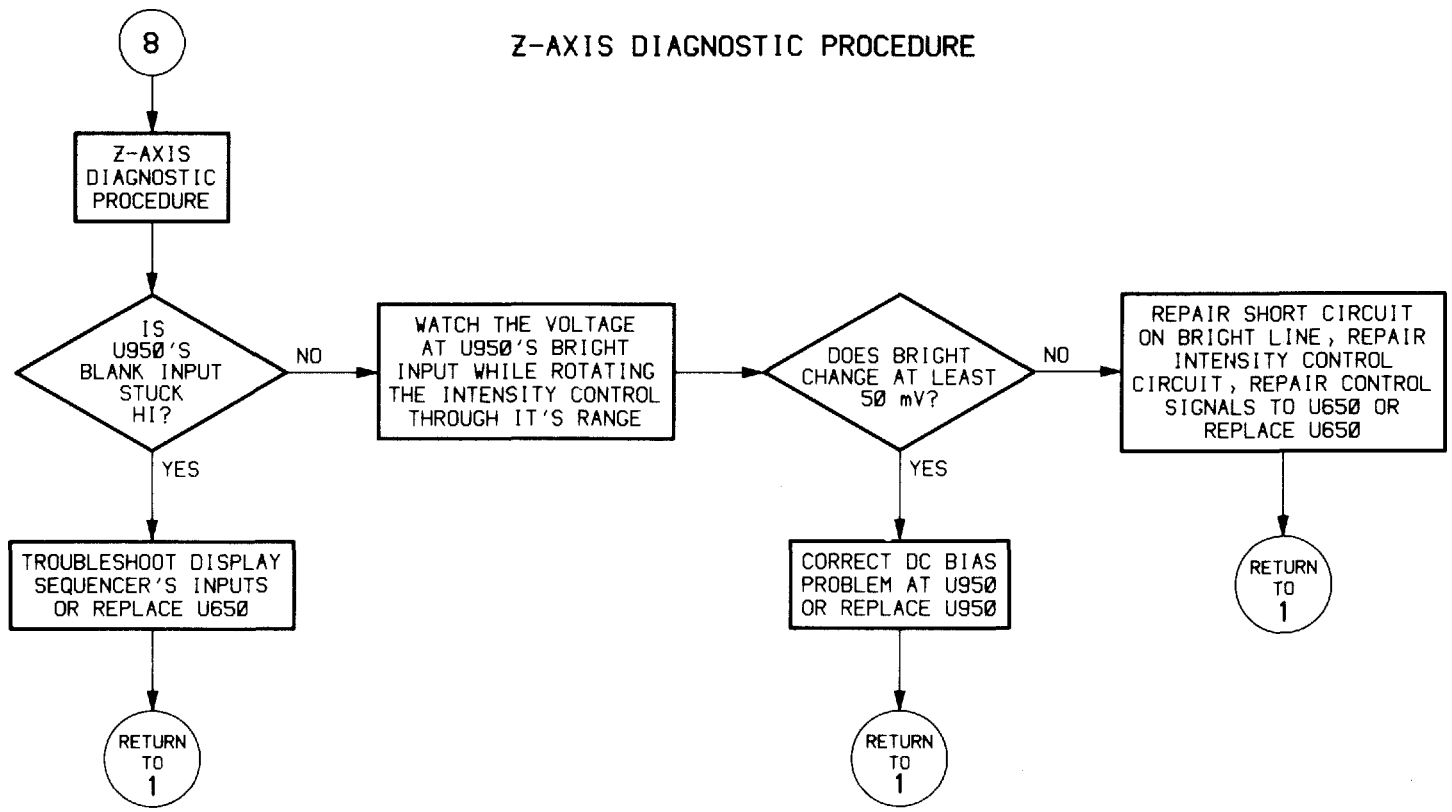

Z-AXIS DIAGNOSTIC PROCEDURE (SN B049999 & BELOW) 8

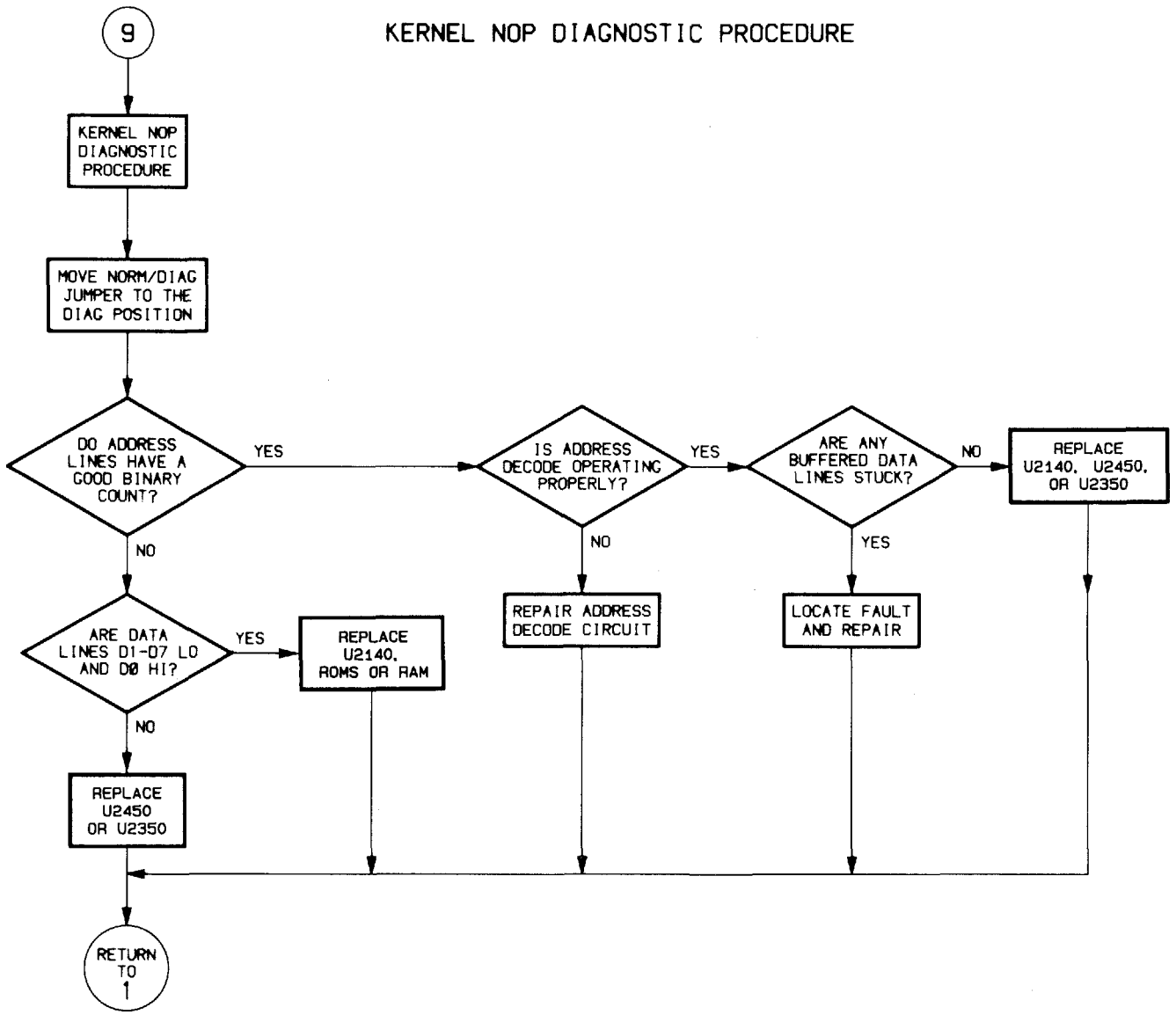
9
KERNEL NOP DIAGNOSTIC PROCEDURE
KERNEL NOP DIAGNOSTIC PROCEDURE
MOVE NORM/DIAG JUMPER TO THE DIAG POSITION
DO ADDRESS LINES HAVE A GOOD BINARY COUNT?
YES
NO
IS ADDRESS DECODE OPERATING PROPERLY?
YES
NO
ARE ANY BUFFERED DATA LINES STUCK?
NO
YES
REPLACE U2140, U2450, OR U2350
REPAIR ADDRESS DECODE CIRCUIT
LOCATE FAULT AND REPAIR
ARE DATA LINES D1-D7 LO AND D0 HI?
YES
NO
REPLACE U2140, ROMS OR RAM
REPLACE U2450 OR U2350
RETURN TO 1

Power Supply Voltage Tolerances

Power Supply	Test Point (+ Lead)	Reading
+10 V	J119-4	+9.99 to +10.01
+87 V	J119-8	+85.26 to +88.74
+42.4 V	J119-9	+41.55 to +43.25
+15 V	J119-6	+14.775 to +15.225
Digital +5 V	J119-2	+4.85 to +5.15
Analog +5 V	J119-12	+4.925 to +5.075
−5 V	J119-5	−4.965 to −5.035
−8 V	J119-11	−7.88 to −8.12
−15 V	J119-1	−14.775 to −15.225

POWER SUPPLY TROUBLESHOOTING PROCEDURE

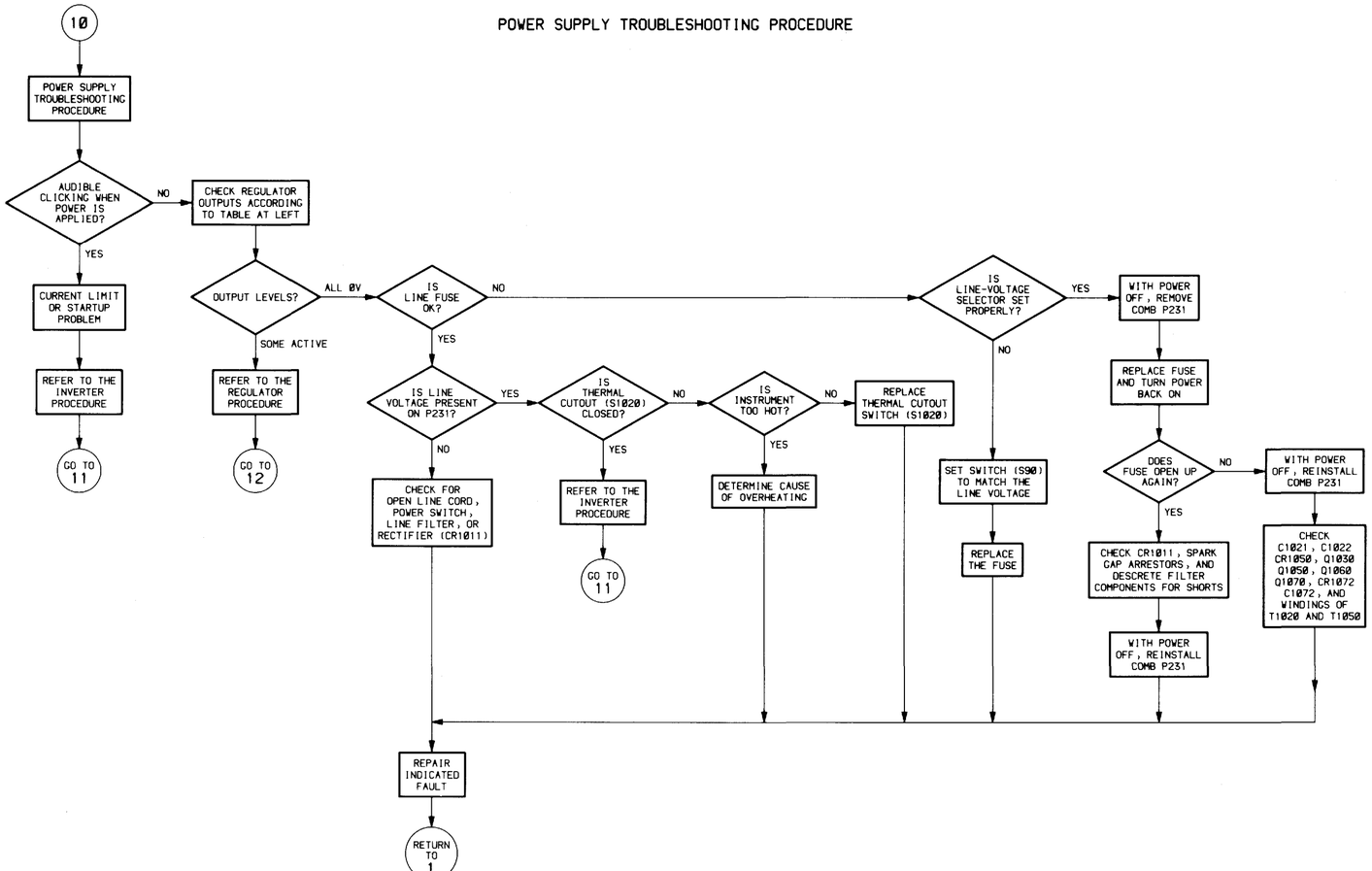

Primary Test Load

The test load illustrated below may be used to test the operation of the inverter with the output transformer (T1060) and drive transistors (Q1060 and Q1070) disconnected. Connect the + lead of the load to the lifted end of W1060 (see procedure in flowchart at right) and the — lead to the sources of Q1060 and Q1070. A schematic diagram of the load, showing the associated Tektronix part numbers, is given below.

PRIMARY TEST LOAD

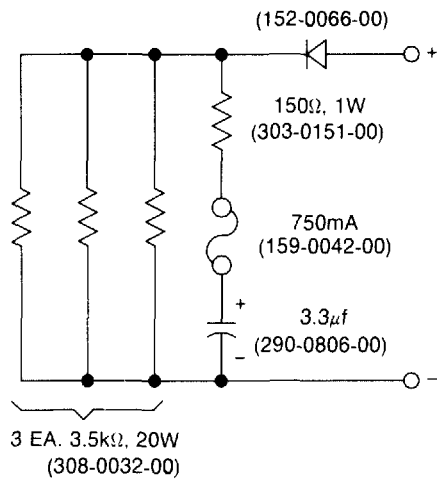

+5 V_D Test Load

Some load is required for the Inverter to run. When the Power Supply module is removed from the instrument or when the Regulator Board is disconnected from the Inverter Board's output, the test load described below may be used to check the operation of the Inverter.

NOTE

Each of the Regulators requires a load to regulate properly; this loading is not provided by the +5 V_D load.

TEST LOAD. Connect a 2-Ω, 25 watt resistor (Tektronix part number 308-0205-00) from the +5 V_D pins of J303 and J232 (on the Inverter Board) to ground.

INVERTER TOUBLESHOOTING PROCEDURE

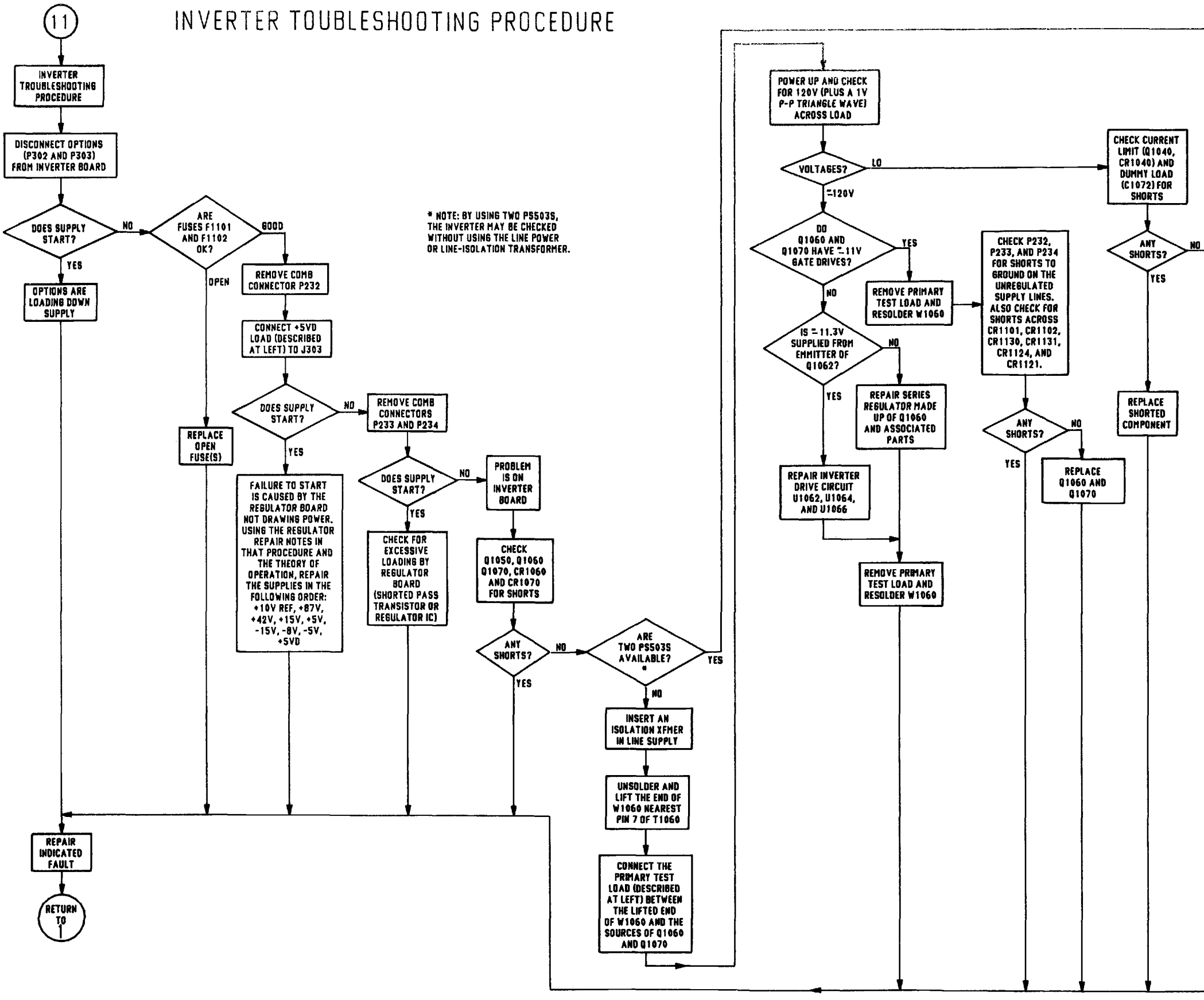

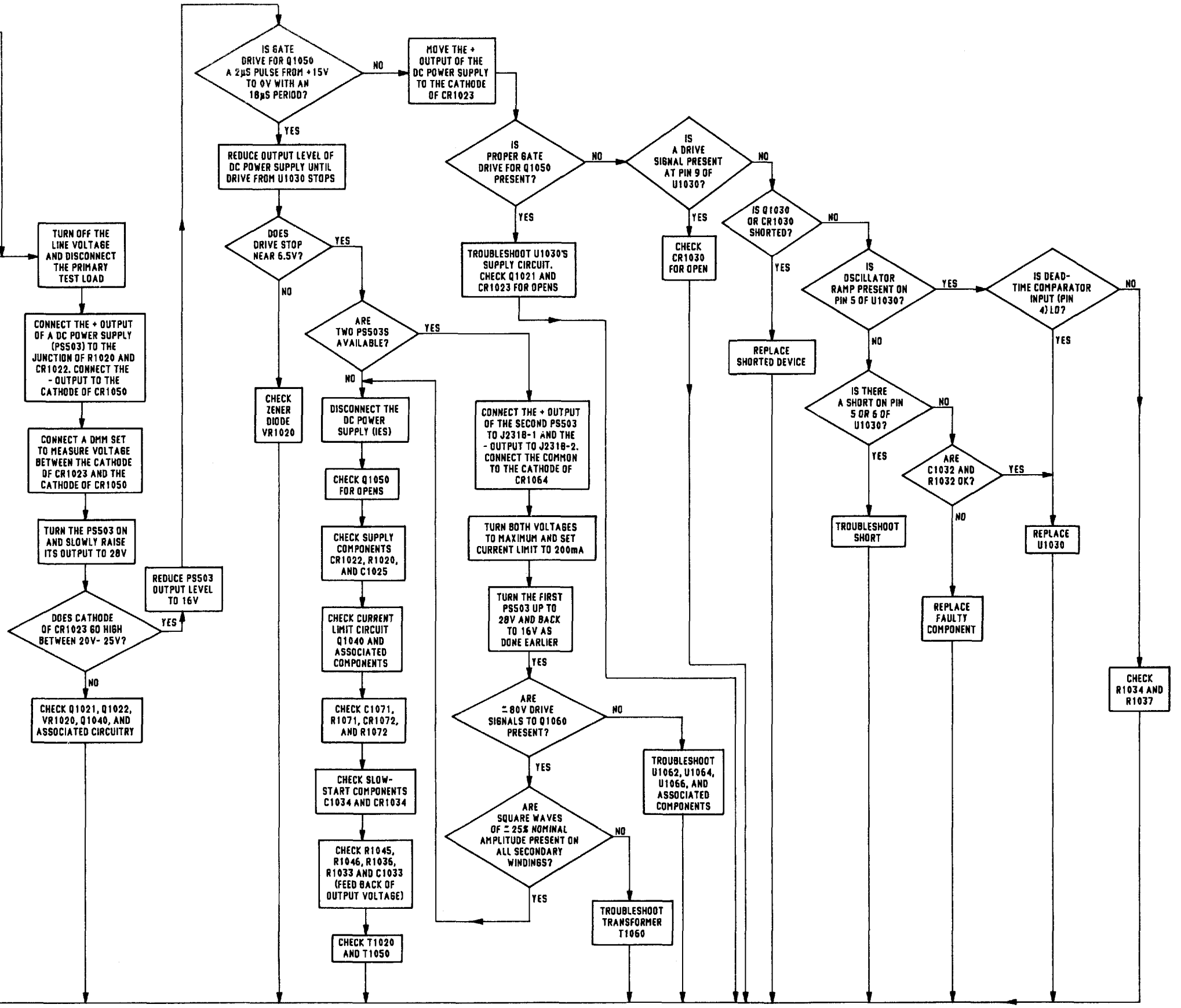
TURN OFF THE LINE VOLTAGE AND DISCONNECT THE PRIMARY TEST LOAD
CONNECT THE + OUTPUT OF A DC POWER SUPPLY (PS503) TO THE JUNCTION OF R1020 AND CR1022. CONNECT THE - OUTPUT TO THE CATHODE OF CR1050
CONNECT A DMM SET TO MEASURE VOLTAGE BETWEEN THE CATHODE OF CR1023 AND THE CATHODE OF CR1050
TURN THE PS503 ON AND SLOWLY RAISE ITS OUTPUT TO 28V
DOES CATHODE OF CR1023 GO HIGH BETWEEN 20V- 25V?
YES
REDUCE PS503 OUTPUT LEVEL TO 16V
NO
CHECK Q1021, Q1022, VR1020, Q1040, AND ASSOCIATED CIRCUITRY
IS GATE DRIVE FOR Q1050 A 2µS PULSE FROM +15V TO 0V WITH AN 18µS PERIOD?
NO
MOVE THE + OUTPUT OF THE DC POWER SUPPLY TO THE CATHODE OF CR1023
YES
REDUCE OUTPUT LEVEL OF DC POWER SUPPLY UNTIL DRIVE FROM U1030 STOPS
DOES DRIVE STOP NEAR 6.5V?
YES
NO
CHECK ZENER DIODE VR1020
ARE TWO PS503S AVAILABLE?
YES
NO
DISCONNECT THE DC POWER SUPPLY (IES)
CHECK Q1050 FOR OPENS
CHECK SUPPLY COMPONENTS CR1022, R1020, AND C1025
CHECK CURRENT LIMIT CIRCUIT Q1040 AND ASSOCIATED COMPONENTS
CHECK C1071, R1071, CR1072, AND R1072
CHECK SLOW-START COMPONENTS C1034 AND CR1034
CHECK R1045, R1046, R1036, R1033 AND C1033 (FEED BACK OF OUTPUT VOLTAGE)
CHECK T1020 AND T1050
CONNECT THE + OUTPUT OF THE SECOND PS503 TO J2318-1 AND THE - OUTPUT TO J2318-2. CONNECT THE COMMON TO THE CATHODE OF CR1064
TURN BOTH VOLTAGES TO MAXIMUM AND SET CURRENT LIMIT TO 200mA
TURN THE FIRST PS503 UP TO 28V AND BACK TO 16V AS DONE EARLIER
YES
ARE ≃80V DRIVE SIGNALS TO Q1060 PRESENT?
NO
TROUBLESHOOT U1062, U1064, U1066, AND ASSOCIATED COMPONENTS
YES
ARE SQUARE WAVES OF ≃25% NOMINAL AMPLITUDE PRESENT ON ALL SECONDARY WINDINGS?
NO
TROUBLESHOOT TRANSFORMER T1060
YES
IS PROPER GATE DRIVE FOR Q1050 PRESENT?
NO
YES
TROUBLESHOOT U1030'S SUPPLY CIRCUIT. CHECK Q1021 AND CR1023 FOR OPENS
IS A DRIVE SIGNAL PRESENT AT PIN 9 OF U1030?
NO
YES
CHECK CR1030 FOR OPEN
IS Q1030 OR CR1030 SHORTED?
NO
YES
REPLACE SHORTED DEVICE
IS OSCILLATOR RAMP PRESENT ON PIN 5 OF U1030?
YES
IS DEAD-TIME COMPARATOR INPUT (PIN 4) LO?
NO
YES
CHECK R1034 AND R1037
NO
IS THERE A SHORT ON PIN 5 OR 6 OF U1030?
NO
YES
ARE C1032 AND R1032 OK?
YES
NO
REPLACE U1030
REPLACE FAULTY COMPONENT
TROUBLESHOOT SHORT
6019-37A

Regulator Repair Notes

Hints for troubleshooting a faulty supply Regulator:

1. First verify that the $+10\text{-}V_{REF}$ level is correctly adjusted; if it is not, do so (see Adjustment Procedure in Section 5).

2. Regulator output is high:

   a. Is the output loaded? All Regulators (except $+10\text{-}V_{REF}$) require some load to regulate, the lower voltage supplies requiring greater loads. The Regulators between +15 V and −15 V may be loaded using 100-Ω resistors of the proper power ratings.

   b. Check for a short-circuited series-pass device.

   c. Check feedback through to voltage-sense comparator.

3. Regulator output is low:

   a. Check for excessive loading using the Load Isolation diagram below and the Interconnection Schematic (diagram 13).

   b. The operation of the supply Regulators is interdependent. If a supply is out of regulation, verify that the supply of next greater magnitude is operating properly. Repair faulty Regulators in the following order: +87 V, +42 V, +15 V, +5 V, −15 V, -8 V, and then −5 V.

   c. Verify that the current-limit circuit is not activated.

   d. Check drive to series-pass device and verify that the device is not open circuited.

   e. Check feedback through the voltage-sense comparator.

   f. If supply goes low only when fully loaded, suspect an open-circuit diode in the associated rectifier circuit.

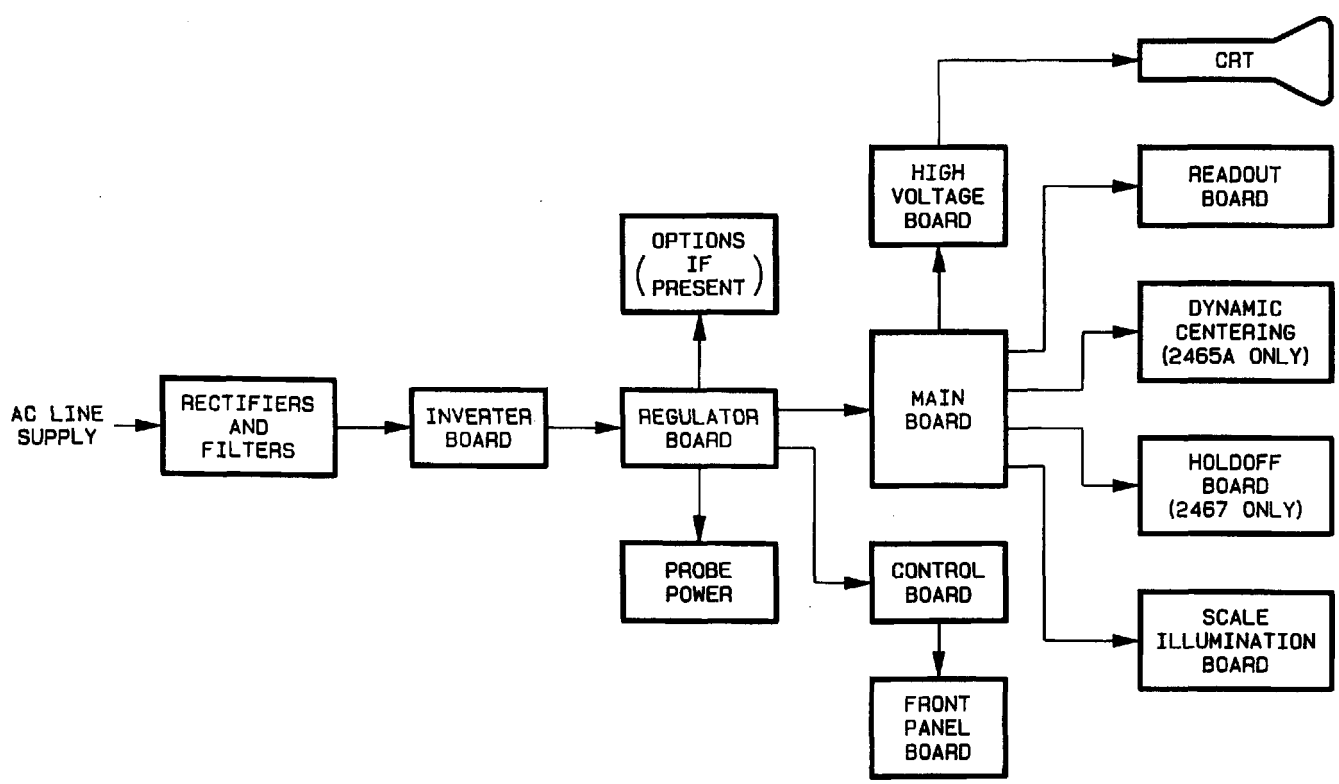

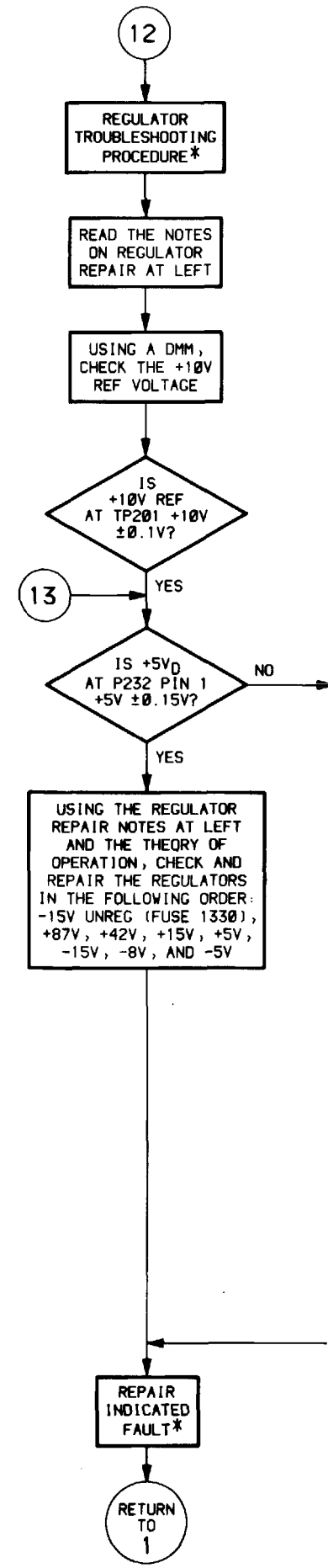

REGULATOR TROUBLESHOOTING PROCEDURE

*NOTE: ADJUSTMENT OR REPAIR OF ANY POWER SUPPLY REGULATOR NECESSITATES A COMPLETE RECALIBRATION OF THE INSTRUMENT.

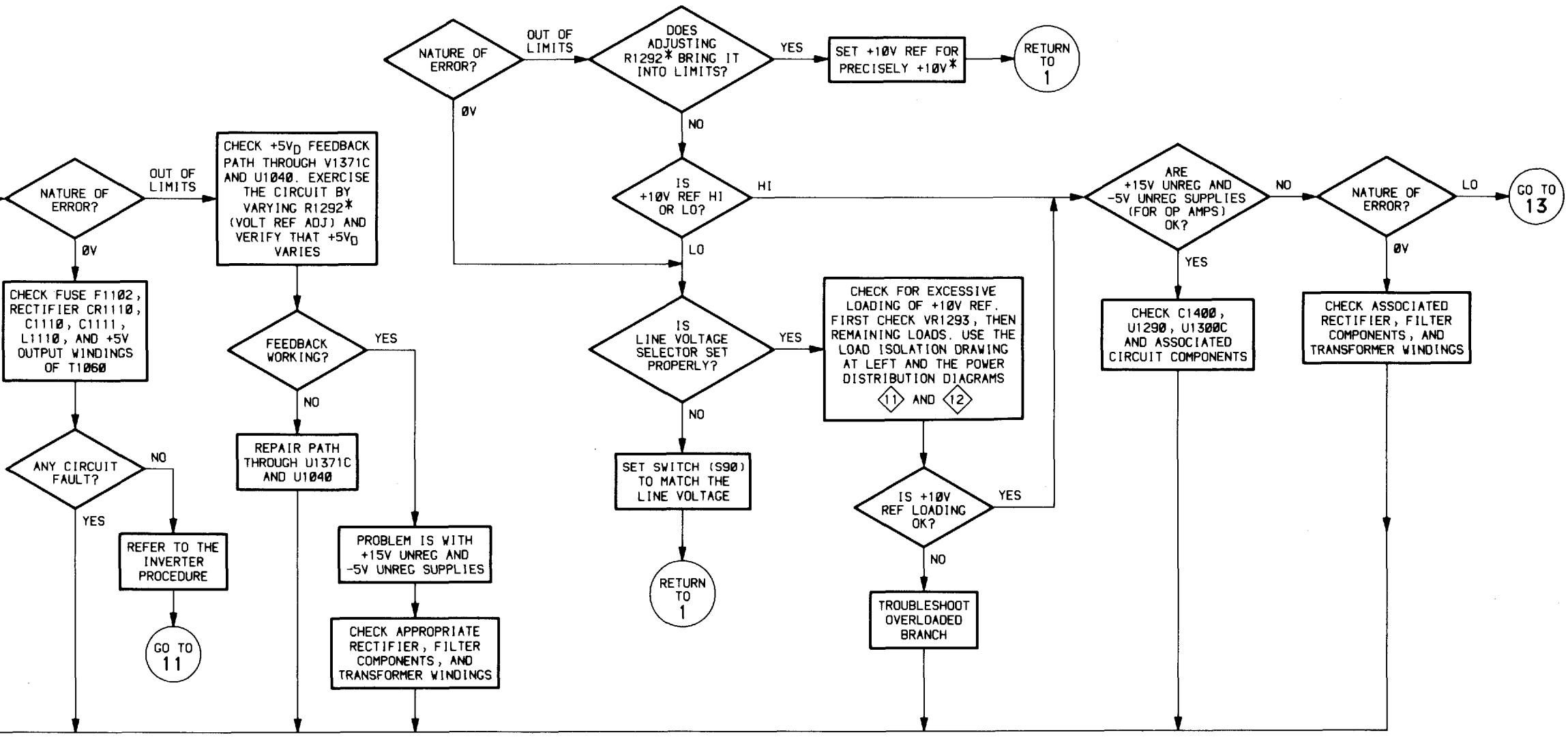

6019-38A

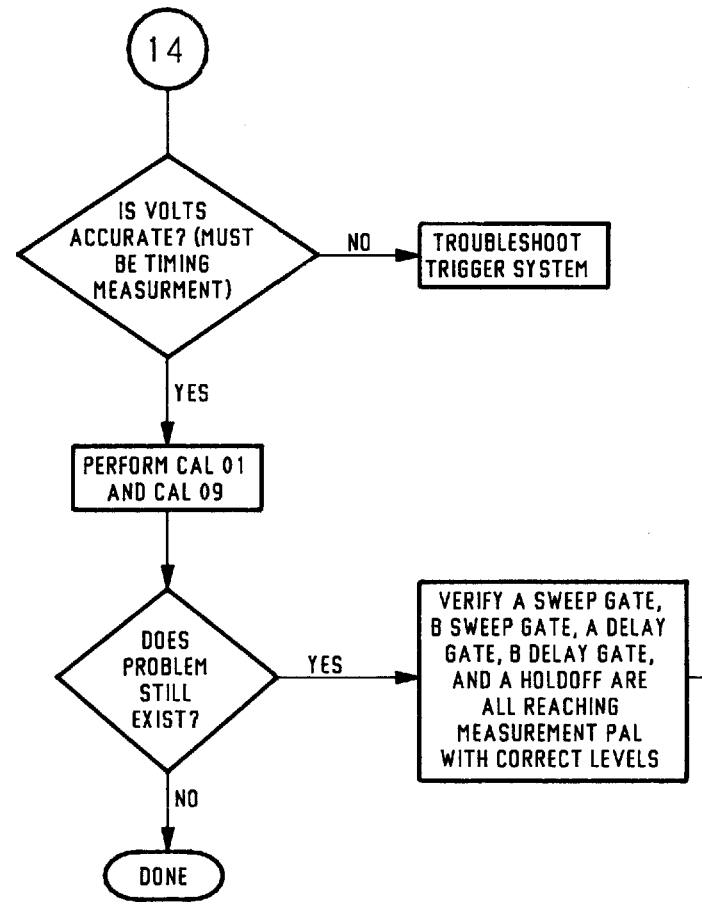
14
IS VOLTS ACCURATE? (MUST BE TIMING MEASURMENT)
NO
TROUBLESHOOT TRIGGER SYSTEM
YES
PERFORM CAL 01 AND CAL 09
DOES PROBLEM STILL EXIST?
YES
VERIFY A SWEEP GATE, B SWEEP GATE, A DELAY GATE, B DELAY GATE, AND A HOLDOFF ARE ALL REACHING MEASUREMENT PAL WITH CORRECT LEVELS
NO
DONE

PARAMETRIC MEASUREMENT TROUBLESHOOTING

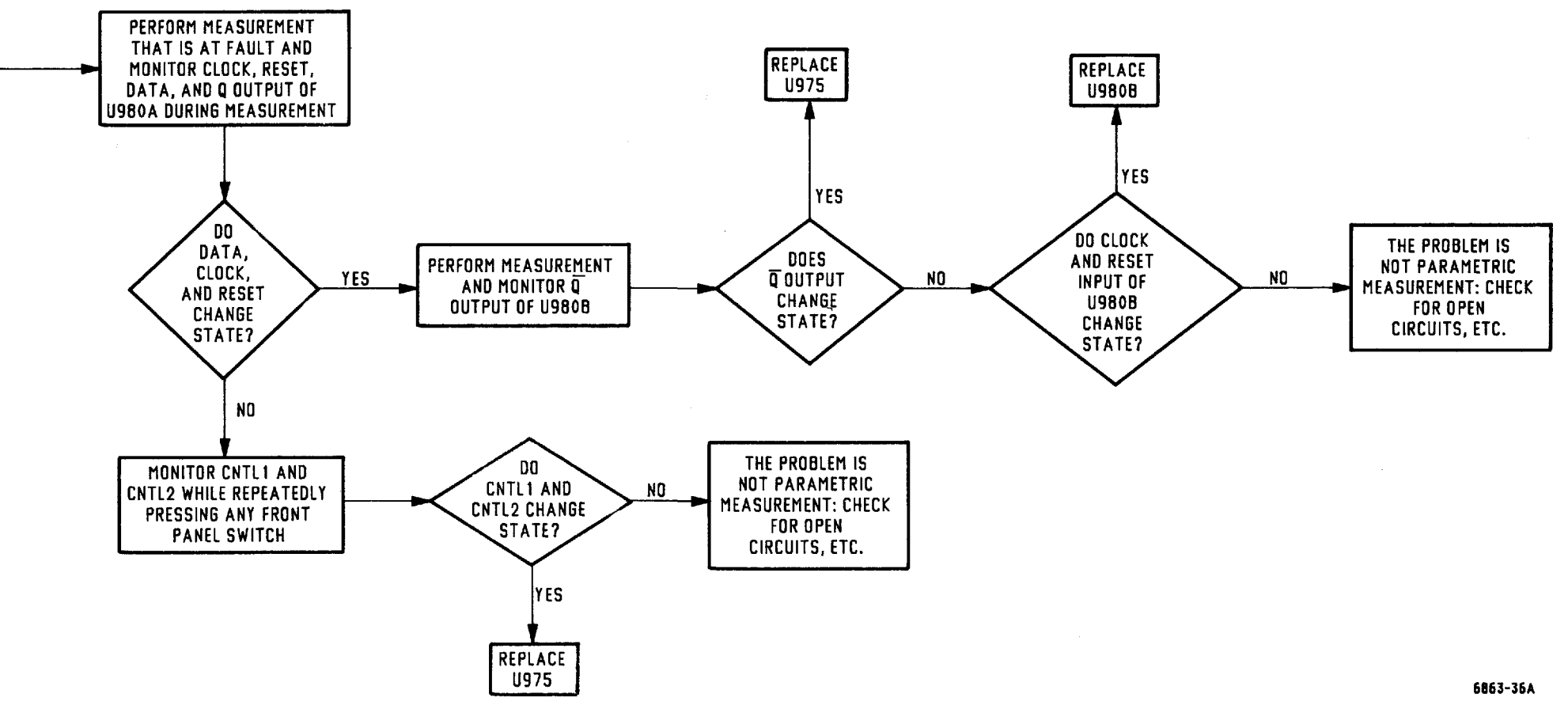

6863-36A

REPLACEABLE MECHANICAL PARTS

PARTS ORDERING INFORMATION

Replacement parts are available from or through your local Tektronix, Inc. Field Office or representative.

Changes to Tektronix instruments are sometimes made to accommodate improved components as they become available, and to give you the benefit of the latest circuit improvements developed in our engineering department. It is therefore important, when ordering parts, to include the following information in your order: Part number, instrument type or number, serial number, and modification number if applicable.

If a part you have ordered has been replaced with a new or improved part, your local Tektronix, Inc. Field Office or representative will contact you concerning any change in part number.

Change information, if any, is located at the rear of this manual.

ITEM NAME

In the Parts List, an item Name is separated from the description by a colon(:). Because of space limitations, an Item Name may sometimes appear as incomplete. For further Item Name identification, the U.S. Federal Cataloging Handbook H6-1 can be utilized where possible.

FIGURE AND INDEX NUMBERS

Items in this section are referenced by figure and index numbers to the illustrations.

INDENTATION SYSTEM

This mechanical parts list is indented to indicate item relationships. Following is an example of the indentation system used in the description column.

1 2 3 4 5 Name & Description

Assembly and/or Component
Attaching parts for Assembly and/or Component

END ATTACHING PARTS

Detail Part of Assembly and/or Component
Attaching parts for Detail Part

END ATTACHING PARTS

Parts of Detail Part
Attaching parts for Parts of Detail Part

END ATTACHING PARTS

Attaching Parts always appear in the same indentation as the item it mounts, while the detail parts are indented to the right. Indented items are part of, and included with, the next higher indentation.

Attaching parts must be purchased separately, unless otherwise specified.

ABBREVIATIONS

Abbreviations conform to American National Standards Institute YI.I

CROSS INDEX – MFR. CODE NUMBER TO MANUFACTURER

Mfr. Code	Manufacturer	Address	City, State, Zip Code
S3109	FELLER	72 VERONICA AVE UNIT 4	SUMMERSET NJ 08873
S3629	SCHURTER AG H C/O PANEL COMPONENTS CORP	2015 SECOND STREET	BERKELEY CA 94170
TK0I0	TAJIMI ELECTRONICS CO LTD	29–1, 2–CHOME EBISU–MINAMI, SHIBUYA–KU	TOKYO, JAPAP 101
TK0011	OREGON FOUR–SLIDE PROD	RT 1 BOX 83G	YONCOLLA OR 97499
TK0032	POWELL ELECTRONICS	411 FAIRCHILD DR	MT VIEW CA 94040
TK0433	PORTLAND SCREW CO		
TK0435	LEWIS SCREW CO	4300 S RACINE AVE	CHICAGO IL 60609–3320
TK0588	UNIVERSAL PRECISION PRODUCTS	1775 NW 216TH	HILLSBORO OR 97123
TK0657	CALORIC COLOR CO	176 SADDLE RIVER AVE	GARFIELD NJ 07026–1914
TK0753	RATEL ELECTRONICS	948 BENICIA AVENUE	SUNNYVALE CA 94086
TK0860	LABEL GRAPHICS	6700 SW BRADBURY CT	PORTLAND OR 97224
TK1159	IMPROVED PRODUCTS	3400 OLYMPIC STREET	SPRINGFIELD OR 97477
TK1160	MECHANICAL PRODUCTS MANUFACTURING CO	1723 1ST SO	SEATTLE WA 98134–3462
TK1163	POLYCAST INC	9898 SW TIGARD ST	TIGARD OR 97223
TK1165	STEN MFG INC	9702 85TH AVENUE N	MINNEAPOLIS MN 55369
TK1166	CIMCO INC	265 BRIGGS AVE	COSTA MESA CA 92626–4506
TK1167	COLUMBINE PLASTICS CORP	3195 BLUFF	BOULDER CO 80301–2103
TK1169	DIEMAKERS INC	801 2ND ST PO BOX 278	MONROE CITY MO 63456–1441
TK1173	ACCURATE PLASTICS & ENG INC	1921 MILLER DRIVE	LONGMONT CO 80501
TK1287	ENOCH MFG CO	14242 SE 82ND DR PO BOX 98	CLACKAMAS OR 97015
TK1299	ENGEL TOOL & DIE	1055 S BERTELSEN	EUGENE OR 97402
TK1326	NORTHWEST FOURSLIDE INC	18224 SW 100TH CT	TUALATIN OR 97062
TK1328	NIDEC AMERICA CORP	682 TRANSFER RD	ST PAUL MN 55114
TK1386	PYRAMID ELECTRONICS SUPPLY INC	9757 JUANITA DRIVE NE	KIRKLAND WA 98034
TK1465	BEAVERTON PARTS MFG CO	1800 NW 216TH AVE	HILLSBORO OR 97124–6629
TK1585	POFCO INC	12805 SE CAPPS RD PO BOX 307	CLACKAMAS OR 97015–8903
TK1592	W AND W METAL	6521 SE CROSSWHITE WAY	PORTLAND OR 97206
TK1614	STUCKEL R J CO	1385 HOWARD ST	ELK GROVE VILLAGE IL 60007–2213
TK1623	STARKOR MFG	3454 NE HWY 101	LINCOLN CITY OR 97367
TK1905	PUGET CORP OF OREGON	7440 S W BONITA	TIGARD OR 97223
TK1938	GALGON INDUSTRIES	37399 CENTRAL MONT PLACE	FREMONT CA 94536
TK2394	HARTZELL MANUFACTURING INC	2516 WABASH AVENUE	ST PAUL MN 55114
0B445	ELECTRI–CORD MFG CO INC	312 EAST MAIN ST	WESTFIELD PA 16950
0JRZ2	BADGLEY MFG CO	1620 NE ARGYLE	PORTLAND OR 97211
0JR05	TRIQUEST CORP	3000 LEWIS AND CLARK HWY	VANCOUVER WA 98661–2999

CROSS INDEX – MFR. CODE NUMBER TO MANUFACTURER

Mfr. Code	Manufacturer	Address	City, State, Zip Code
0J260	COMTEK MANUFACTURING OF OREGON (METALS)	PO BOX 4200	BEAVERTON OR 97076–4200
0J7N9	MCX INC	30608 SAN ANTONIO ST	HAYWARD CA 94544
0J9P9	GEROME MFG CO INC	PO BOX 737	NEWBERG OR 97132
0KB00	SCHRAMM PLASTIC FABRICATIORS	7885 SW HUNZIKER	TIGARD OR 97223
0KB01	STAUFFER SUPPLY	810 SE SHERMAN	PORTLAND OR 97214
02768	ILLINOIS TOOL WORKS INC FASTEX DIVISION	195 ALGONQUIN ROAD	DES PLAINES IL 60016–6103
04811	PRECISION COIL SPRING CO	10107 ROSE ST PO BOX 5450	EL MONTE CA 91734
05006	20TH CENTURY PLASTICS INC	3628 CRENSHAW BLVD PO BOX 30231	LOS ANGELES CA 90030
06090	RAYCHEM CORP	300 CONSTITUTION DRIVE	MENLO PARK CA 94025–1111
06915	RICHCO PLASTIC CO	5825 N TRIPP AVE	CHICAGO IL 60646–6013
07416	NELSON NAME PLATE CO	3191 CASITAS	LOS ANGELES CA 90039–2410
09922	BURNDY CORP	RICHARDS AVE	NORWALK CT 06852
12327	FREEWAY CORP	9301 ALLEN DR	CLEVELAND OH 44125–4632
18565	CHOMERICS INC	77 DRAGON COURT	WOBURN MA 01801–1039
22526	DU PONT E I DE NEMOURS AND CO INC DU PONT ELECTRONICS DEPT	515 FISHING CREEK RD	NEW CUMBERLAND PA 17070–3007
22670	G M NAMEPLATE INC	2040 15TH AVE WEST	SEATTLE WA 98119–2728
24931	SPECIALTY CONNECTOR CO INC	2100 EARLYWOOD DR PO BOX 547	FRANKLIN IN 46131
31918	ITT SCHADOW INC	8081 WALLACE RD	EDEN PRAIRIE MN 55344–2224
5Y400	TRIAX METAL PRODUCTS INC DIV OF BEAVERTON PARTS MFG CO	1800 216TH AVE NW	HILLSBORO OR 97124–6629
53387	MINNESOTA MINING MFG CO	PO BOX 2963	AUSTIN TX 78769–2963
54583	TDK ELECTRONICS CORP	12 HARBOR PARK DR	PORT WASHINGTON NY 11550
55285	BERGQUIST CO INC THE	5300 EDINA INDUSTRIAL BLVD	MINNEAPOLIS MN 55435–3707
7X318	KASO PLASTICS INC	11015 A NE 39th	VANCOUVER WA 98662
70903	COOPER BELDEN ELECTRONICS WIRE AND CABLE SUB OF COOPER INDUSTRIES INC		
71400	BUSSMANN DIV OF COOPER INDUSTRIES INC	114 OLD STATE RD PO BOX 14460	ST LOUIS MO 63178
73743	FISCHER SPECIAL MFG CO	111 INDUSTRIAL RD	COLD SPRING KY 41076–9749
76814	NORTHERN ENGRAVING CORP	803 S BLACK RIVER ST	SPARTA WI 54656–2221
78189	ILLINOIS TOOL WORKS INC SHAKEPROOF DIV	ST CHARLES ROAD	ELGIN IL 60120
79136	WALDES KOHINOOR INC	47–16 AUSTEL PLACE	LONG ISLAND CITY NY 11101–4402
8X345	NORTHWEST SPRING & MFG CO	5858 WILLOW LANE	LAKE OSWEGO OR 97034–5343
80009	TEKTRONIX INC	14150 SW KARL BRAUN DR PO BOX 500	BEAVERTON OR 97077–0001
80033	MICRODOT MFG INC PRESTOLE EVERLOCK DIV	1345 MIAMI ST P O BOX 278	TOLEDO OH 43605

CROSS INDEX – MFR. CODE NUMBER TO MANUFACTURER

Mfr. Code	Manufacturer	Address	City, State, Zip Code
85480	BRADY W H CO CORP H Q INDUSTRIAL PRODUCTS DIV	2221 W CAMDEN RD PO BOX 2131	MILWAUKEE WI 53209
92101	SCHULZE MFG	50 INGOLD RD	BURLINGAME CA 94010–2206
93907	TEXTRON INC CAMCAR DIV	600 18TH AVE	ROCKFORD IL 61108–5181

Fig. & Index No.	Tektronix Part No.	Serial No. Effective	Dscont	Qty	12345 Name & Description	Mfr. Code	Mfr. Part No.
1-1	334-6342-02			1	MARKER,IDENT:MARKED TEKTRONIX 2465B	22670	ORDER BY DESC
-2	366-2041-03			4	KNOB:DOVE GRAY,BAR,0.172 X 0.41 X 0.496 H	7X318	ORDER BY DESC
	377-0512-01	B010100	B013923	4	INSERT,KNOB:0.172 ID X 0.28 OD X 0.64,NYL	0JR05	ORDER BY DESC
	377-0512-03	B013924		4	INSERT,KNOB:0.128 ID X 0.37 OD X 0.67 L,XL	TK1163	ORDER BY DESC
	366-2036-00			1	PUSH BUTTON:GY,0.206 SQ,1.445 H	0JR05	ORDER BY DESC
-3	334-6335-00			1	MARKER,IDENT:MKD CRT CONTROLS	76814	ORDER BY DESC
-4	200-2779-00			1	COVER,TOP:TRIM	0JR05	ORDER BY DESC
-5	348-0740-00			2	FOOT,CABINET:BOTTOM FRONT,PLASTIC ATTACHING PARTS	0JR05	ORDER BY DESC
-6	211-0718-00			2	SCREW,MACHINE:6-32 X 0.312,FLH,STL END ATTACHING PARTS	0KB01	ORDER BY DESC
-7	101-0082-02			1	TRIM,DECORATIVE:FRONT,PLASTIC ATTACHING PARTS	TK1163	ORDER BY DESC
-8	211-0718-00			10	SCREW,MACHINE:6-32 X 0.312,FLH,STL	0KB01	ORDER BY DESC
	214-3374-01			1	SPRING,FILTER:1.32 L,CU-BE END ATTACHING PARTS	TK0011	ORDER BY DESC
-9	337-2926-03			1	SHLD,IMPLOSION:4.44 X 3.67 X 0.06,CLEAR	TK1159	ORDER BY DESC
	378-0199-03			1	FILTER,LT,CRT:BLUE,3.415 X 4.105 X 0.030THK	0KB00	378019903
-10	334-4378-01			1	MARKER,IDENT:MKD PROBE POWER (OPTION 11 ONLY)	07416	ORDER BY DESC
-11	334-6341-00			1	MARKER,IDENT:MKD REAR BNC	07416	ORDER BY DESC
-12	334-4377-04			1	MARKER,IDENT:MKD CAUTION	07416	ORDER BY DESC
	334-5696-02			1	MARKER,IDENT:MKD OPTION	07416	ORDER BY DESC
-13	348-0729-01			2	FOOT,CABINET:W/CORD WRAP,REAR ATTACHING PARTS	0JR05	ORDER BY DESC
-14	212-0154-00			4	SCREW,MACHINE:8-32 X 1.125,PNH,STL	0KB01	ORDER BY DESC
	211-0722-00			2	SCREW,MACHINE:6-32 X 0.25,PNH,STL END ATTACHING PARTS	0KB01	ORDER BY DESC
-15	200-2685-04			1	COVER,REAR:STD W/LABELS	80009	200268504
-16	334-6340-01			1	MARKER,IDENT:MARKED 2465B	22670	ORDER BY DESC
-17	367-0303-04			1	HANDLE,CARRYING:12.86 L,GRIP & INDEX ATTACHING PARTS	0JR05	ORDER BY DESC
-18	212-0144-00			2	SCREW,TPG,TF:8-16 X 0.562 L,PLASTITE END ATTACHING PARTS	0KB01	ORDER BY DESC
-19	337-2395-00			2	SHIELD,ELEC:HANDLE ATTACHING PARTS	TK1614	ORDER BY DESC
-20	213-0138-00			4	SCREW,TPG,TF:4-24 X 0.188,TYPE B,PNH,STL END ATTACHING PARTS	TK0435	TAPPING SCREW
-21	437-0286-03	B050000	B054264	1	CABINET,SCOPE:ALUMINUM	0J9P9	ORDER BY DESC
	437-0286-06	B054265		1	CABINET,SCOPE:2445B/55B/65B,ALUMINUM	0J9P9	ORDER BY DESC
-22	348-0764-03			1	SHLD GSKT,ELEK:0.125 X 0.188,34.0 L	18565	53-MN500018

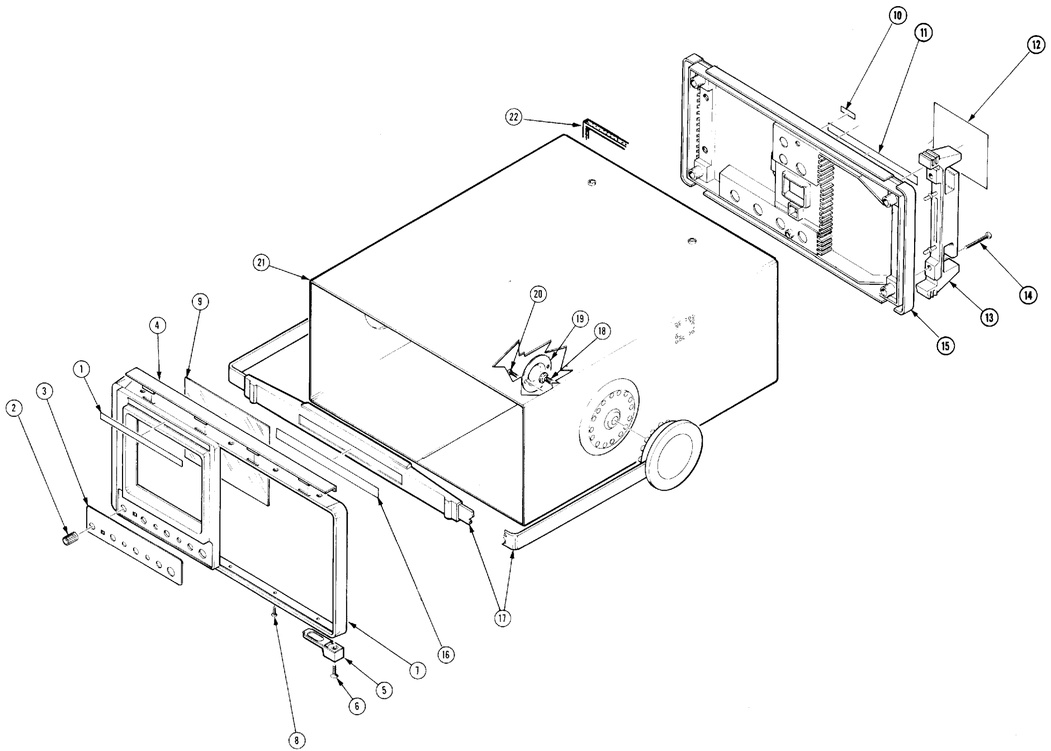

FIG. 1 CABINET

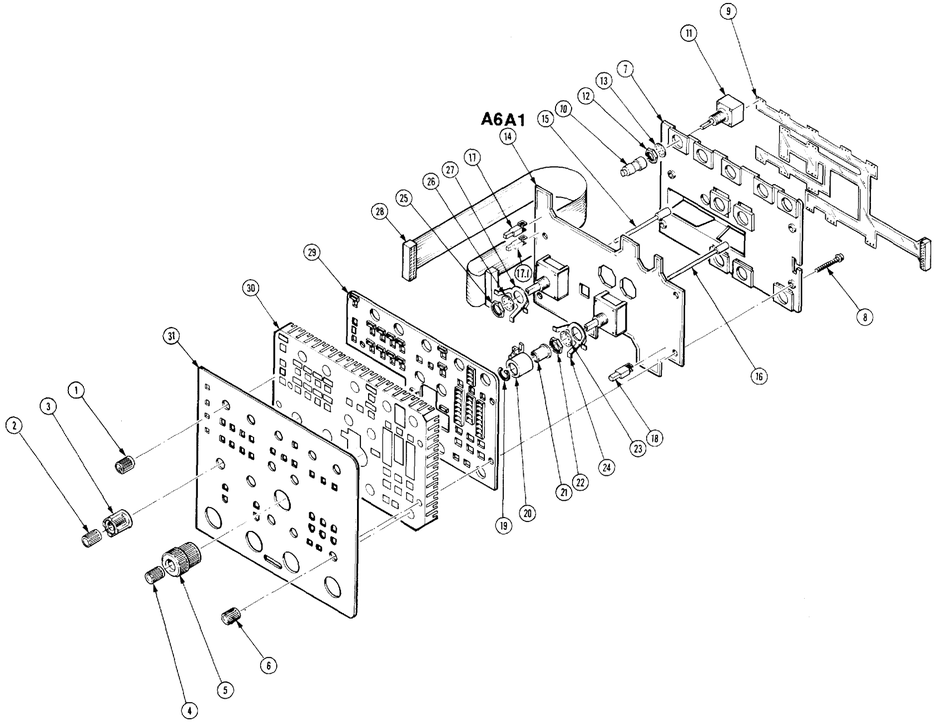

FIG. 2 FRONT PANEL MODULE

Fig. & Index No.	Tektronix Part No.	Serial No. Effective	Dscont	Qty	12345 Name & Description	Mfr. Code	Mfr. Part No.
2-1	366-2041-03			7	KNOB:DOVE GRAY,BAR,0.172 X 0.41 X 0.496 H	7X318	ORDER BY DESC
-2	366-1510-00			2	KNOB:DOVE GRAY,VAR,0.127 X 0.392 X 0.466 H	0JR05	ORDER BY DESC
-3	366-1227-00			2	KNOB:DOVE GRAY,VOLTS/DIV,0.486 X 0.706 X 0.6	TK1163	ORDER BY DESC
-4	366-1510-00			1	KNOB:DOVE GRAY,VAR,0.127 X 0.392 X 0.466 H	0JR05	ORDER BY DESC
-5	366-1220-01	B010100	B016390	1	KNOB:DOVE GRAY,TIME/DIV,0.65 X 0.855 X 0.8 H	TK1163	366-1220-01
	366-1220-02	B016391		1	KNOB:DOVE GRAY,TIME/DIV,0.44 X 0.855 X 0.84 H	TK1163	ORDER BY DESC
-6	366-1833-01			3	KNOB:DOVE GRAY,0.25 ID X 0.392 OD X 0.466 H	0JR05	ORDER BY DESC
-7	352-0790-01			1	HLDR,VAR,RES:BLACK POLYCARBONATE ATTACHING PARTS	TK1163	352079001
-8	211-0302-00			4	SCR,ASSEM WSHR:4-40 X 0.75,PNH,STL END ATTACHING PARTS	0KB01	ORDER BY DESC
-9	259-0025-04			1	FLEX CIRCUIT:2467	80009	259002504
-10	377-0413-00			10	INSERT,KNOB:0.055 ID X 0.37 OD X 0.821,PM	TK1163	ORDER BY DESC
-11	--------			AR	RES,VAR,NONWW: (SEE A6R3007 THRU R3019 REPL) ATTACHING PARTS		
-12	210-0590-00			13	NUT,PLAIN,HEX:0.375-32 X 0.438 BRS	73743	28269-402
-13	210-0012-00			13	WASHER,LOCK:0.384 ID,INTL,0.022 THK,STL END ATTACHING PARTS	78189	1220-02-00-0541
-14	--------			1	CIRCUIT BD ASSY:FR PANEL(SEE A6A1 REPL)		
-15	384-1684-01			2	.SHAFT,VARIABLE:2.16 L,POLYCARBONATE	TK1163	ORDER BY DESC
-16	384-1683-01	B010100	B016390	1	.SHAFT,VARIABLE:2.36 L,POLYCARBONATE	TK1163	ORDER BY DESC
	384-1683-01	B016391		1	.SHAFT,VARIABLE:2.36 L,POLYCARBONATE	TK1163	ORDER BY DESC
-17	366-1516-00			19	.PUSH BUTTON:IVORY GRAY,0.3 X 0.665 H,SQ	TK1163	ORDER BY DESC
-17.1	366-1516-01			1	.PUSH BUTTON:LEG END ORANGE,0.3 X 0.655	TK1163	ORDER BY DESC
-18	366-1538-00			10	.PUSH BUTTON:IVORY GRAY,0.3 X 0.665 H	TK1163	ORDER BY DESC
-19	354-0669-00			1	.RING,RETAINING:CRESENT,0.438 OD	79136	5103-43
-20	214-3824-01			1	.ACTUATOR,SWITCH:TIME PER DIV	TK1163	214-3824-01
-21	377-0412-01			1	.INSERT,KNOB:0.182 ID X 0.5 OD X 0.393 THK,PC	TK1163	337041201
-22	210-0590-00			1	.NUT,PLAIN,HEX:0.375-32 X 0.438 BRS	73743	28269-402
-23	210-0012-00			1	.WASHER,LOCK:0.384 ID,INTL,0.022 THK,STL	78189	1220-02-00-0541
-24	214-3373-00			1	.SPRING,GROUND:PHOSPHOR-BRONZE	92101	ORDER BY DESC
-25	210-0590-00			2	.NUT,PLAIN,HEX:0.375-32 X 0.438 BRS	73743	28269-402
-26	210-0012-00			2	.WASHER,LOCK:0.384 ID,INTL,0.022 THK,STL	78189	1220-02-00-0541
-27	214-3373-00			2	.SPRING,GROUND:PHOSPHOR-BRONZE	92101	ORDER BY DESC
-28	--------			1	.CA ASSY,SP,ELEC:20,28 AWG,11.0 L (SEE A6A1W652 REPL)		
-29	351-0750-01			1	GUIDE,SWITCH:ABS,BLACK	TK1163	ORDER BY DESC
-30	354-0655-01			1	RING,MOUNTING:FR PNL,4.16 X 6.065,BRASS	0J260	ORDER BY DESC
-31	333-3554-00			1	PANEL,FRONT:2465B,4 BUTTON,STD(NON-TV) (STANDARD)	22670	ORDER BY DESC
	333-3555-00			1	PANEL,FRONT:2465B,4 BUTTON,TV OPTION (OPTIONS 05)	22670	ORDER BY DESC

Fig. & Index No.	Tektronix Part No.	Serial No. Effective	Dscont	Qty	12345 Name & Description	Mfr. Code	Mfr. Part No.
3-1	407-2790-02	B010100	B014454	1	BRACKET,CKT BD:VERTICAL,ALUMINUM	TK1592	ORDER BY DESC
	407-2790-03	B014455		1	BRACKET,CKT BD:ALUMINUM	0J9P9	407-2793-03
					ATTACHING PARTS		
-2	211-0711-00			3	SCR,ASSEM WSHR:6-32 X 0.25,PNH,STL,T15	0KB01	ORDER BY DESC
-2.1	211-0711-00			1	SCR,ASSEM WSHR:6-32 X 0.25,PNH,STL,T15	0KB01	ORDER BY DESC
-3	211-0747-00	B010100	B014454	2	SCREW,MACHINE:6-32 X 0.188,PNH,STL	0KB01	ORDER BY DESC
	211-0747-00	B014455		1	SCREW,MACHINE:6-32 X 0.188,PNH,STL	0KB01	ORDER BY DESC
					END ATTACHING PARTS		
-4	343-1012-00			2	RETAINER,CKT BD:POLYCARBONATE	TK1173	ORDER BY DESC
-5	426-1864-01			1	FRAME,CRT:	TK1169	ORDER BY DESC
					ATTACHING PARTS		
-6	211-0713-00			4	SCREW,MACHINE:6-32 X 1.25,FLH,STL	0KB01	ORDER BY DESC
-7	213-0978-00			6	SCREW,TPG,TR:6-32 X 0.5,FLH,STL	0KB01	ORDER BY DESC
					END ATTACHING PARTS		
-8	343-0992-00			2	RETAINER,CRT:CLEAR,PLASTIC	TK1163	ORDER BY DESC
					(UPPER RT/LOWER LEFT/NAT)		
-9	343-0993-00			2	RETAINER,CRT:BLACK,PLASTIC	TK1163	ORDER BY DESC
					(UPPER LEFT/LOWER RT/BLK)		
-10	348-0731-01	B010100	B057642	1	GASKET:CRT,POLYETHYLENE	TK1159	ORDER BY DESC
	348-0731-02	B057643		1	GASKET:CRT,CLEAR,POLYCARBONATE	80009	348073102
-11	378-0204-00			1	REFLECTOR,LIGHT:INT SCALE ILLUMINATION	7X318	ORDER BY DESC
-12	--------			1	CKT BOARD ASSY:SCALE ILLUM (SEE A8 REPL)		
-13	386-4728-01			1	SUBPANEL,FRONT:	TK2394	ORDER BY DESC
-14	348-0792-01			1	GASKET:ELECTRICAL SHIELD,34.0 L	18565	ORDER BY DESC
-15	175-4593-01			1	CA ASSY,SP,ELEC:2,22 AWG,3.5 L,RIBBON	0J7N9	ORDER BY DESC
					(SUBPART OF A8 BOARD)		
-16	386-4713-02			1	PLATE,REAR:POWER SUPPLY	0J9P9	ORDER BY DESC
					ATTACHING PARTS		
-17	211-0711-00			5	SCR,ASSEM WSHR:6-32 X 0.25,PNH,STL,T15	0KB01	ORDER BY DESC
					END ATTACHING PARTS		
	334-3379-00			1	MARKER,IDENT:MARKED GROUND SYMBOL	07416	ORDER BY DESC
-18	195-3984-00			1	LEAD,ELECTRICAL:22 AWG,4.0 L,8-01	TK0032	ORDER BY DESC
-19	334-6652-00			1	MARKER,IDENT:MKD CAUTION BATTERY	07416	ORDER BY DESC
-20	211-0304-00	B010100	B049999	2	SCR,ASSEM WSHR:4-40 X 0.312,PNH,STL,T9	0KB01	ORDER BY DESC
-21	386-4863-00	B010100	B049999	1	SUPPORT,CKT BD:	7X318	ORDER BY DESC
-22	378-0275-00			1	DEFLECTOR,AIR:ALUMINUM	TK1160	378-0275-00
					ATTACHING PARTS		
-23	211-0711-00			1	SCR,ASSEM WSHR:6-32 X 0.25,PNH,STL,T15	0KB01	ORDER BY DESC
					END ATTACHING PARTS		
-24	119-2102-00			1	FAN,TUBEAXIAL:12V,1.5W,3200RPM,24CFM	TK1328	119-2102-00
-25	337-3021-01			1	SHIELD,ELEC:LVPS PEOPLE	7X318	VNDR 45448
					ATTACHING PARTS		
-26	211-0711-00			2	SCR,ASSEM WSHR:6-32 X 0.25,PNH,STL,T15	0KB01	ORDER BY DESC
					END ATTACHING PARTS		
-27	334-5196-00			1	MARKER,IDENT:MKD CAUTION	22670	ORDER BY DESC
				.	(STANDARD,OPTIONS 05,06,09,10)		
-28	200-2264-00			1	CAP,FUSEHOLDER:3AG FUSES	S3629	FEK 031 1666
-29	204-0832-00			1	BODY,FUSEHOLDER:3AG & 5 X 20MM FUSES	S3629	031 1673

Fig. & Index No.	Tektronix Part No.	Serial No. Effective	Dscont	Qty	12345 Name & Description	Mfr. Code	Mfr. Part No.
3-30	200-0237-04			1	COVER,FUHLR:PLASTIC	0JR05	ORDER BY DESC
-31	195-3986-00			1	LEAD,ELECTRICAL:18 AWG,4.0 L,8-0	TK1386	195-3986-00 REV
					ATTACHING PARTS		
-32	210-0457-00			1	NUT,PL,ASSEM WA:6-32 X 0.312,STL	TK0435	ORDER BY DESC
					END ATTACHING PARTS		
					OPTION 11 PARTS INCLUDE:		
-33	175-6044-01			2	.CA ASSY,SP,ELEC:4,26 AWG,6.0 L,RIBBON	0J7N9	ORDER BY DESC
					(TO A2J201,A2J202)		
-34	210-0012-00			2	.WASHER,LOCK:0.384 ID,INTL,0.022 THK,STL	78189	1220-02-00-0541
-35	210-0978-00			2	.WASHER,FLAT:0.375 ID X 0.5 OD X 0.024,STL	12327	ORDER BY DESC
-36	386-5052-00			1	.PLATE,ADAPTER:PROBE POWER,ALUMINUM	TK1592	ORDER BY DESC
	334-1529-01			1	PLATE,IDENT:BLANK	80009	334152901
-37	119-1536-00			1	FILTER,RFI:3A,250VAC,50/60HZ	54583	ZUB2203-00
					ATTACHING PARTS		
-38	211-0332-00			2	SCR,ASSEM WSHR:4-40 X 0.5,PNH,STL,T9	0KB01	ORDER BY DESC
-39	210-0586-00			2	NUT,PL,ASSEM WA:4-40 X 0.25,STL	TK0435	ORDER BY DESC
					END ATTACHING PARTS		
-40	195-3989-00			1	LEAD,ELECTRICAL:18 AWG,4.0 L,8-9	TK0032	ORDER BY DESC
-41	195-3990-00			1	LEAD,ELECTRICAL:18 AWG,4.5 L,5-4	TK0032	ORDER BY DESC
-42	211-0304-00			2	SCR,ASSEM WSHR:4-40 X 0.312,PNH,STL,T9	0KB01	ORDER BY DESC
-43	210-0586-00			2	NUT,PL,ASSEM WA:4-40 X 0.25,STL	TK0435	ORDER BY DESC
-44	--------			1	SWITCH,SLIDE:DPDT (SEE S90 REPL)		
-45	195-3987-00			1	LEAD,ELECTRICAL:22 AWG,2.6 L,8-19	TK0032	ORDER BY DESC
	195-3988-00			1	LEAD,ELECTRICAL:22 AWG,4.0 L,8-29	TK0032	ORDER BY DESC
-46	--------			4	NUT,PLAIN,KNURL:		
					(FURNISHED WITH 131-1910-01 BNC)		
-47	--------			4	WASHER,LOCK:		
					(FURNISHED WITH 131-1910-01 BNC'S)		
-48	131-1910-01			4	CONN,RF JACK:BNC,;50 OHM,FEMALE,STR	24931	28JR284-1
-49	200-2686-00			1	COVER,REAR:CRT	TK1938	ORDER BY DESC
					ATTACHING PARTS		
-50	211-0711-00			3	SCR,ASSEM WSHR:6-32 X 0.25,PNH,STL,T15	0KB01	ORDER BY DESC
					END ATTACHING PARTS		
-51	195-8410-00			1	LEAD,ELECTRICAL:22 AWG,1.65 L	TK1386	ORDER BY DESC
					ATTACHING PARTS		
-52	210-0551-00			1	NUT,PLAIN,HEX:4-40 X 0.25,STL	TK0435	ORDER BY DESC
					END ATTACHING PARTS		
-53	195-9513-00			1	LEAD,ELECTRICAL:22 AWG,1.4 L	TK1386	ORDER BY DESC
					ATTACHING PARTS		
-54	210-0586-00			1	NUT,PL,ASSEM WA:4-40 X 0.25,STL	TK0435	ORDER BY DESC
					END ATTACHING PARTS		
-55	344-0250-00			1	RETAINER,CAP:0.5 DIA,STEEL	80033	E-50001-007
					ATTACHING PARTS		
-56	211-0747-00			1	SCREW,MACHINE:6-32 X 0.188,PNH,STL	0KB01	ORDER BY DESC
					END ATTACHING PARTS		
-57	--------			1	PASSIVE NETWORK: (SEE A13 REPL)		
					ATTACHING PARTS		
-58	211-0304-00			2	SCR,ASSEM WSHR:4-40 X 0.312,PNH,STL,T9	0KB01	ORDER BY DESC

Fig. & Index No.	Tektronix Part No.	Serial No. Effective	Dscont	Qty	12345 Name & Description	Mfr. Code	Mfr. Part No.
3-59	210-0457-00			2	NUT,PL,ASSEM WA:6-32 X 0.312,STL END ATTACHING PARTS	TK0435	ORDER BY DESC
-60	407-2809-00			1	BRACKET,ANGLE:RESISTOR,AL ATTACHING PARTS	92101	ORDER BY DESC
-61	210-0583-00			2	NUT,PLAIN,HEX:0.25-32 X 0.312,BRS END ATTACHING PARTS	73743	2X-20319-402
	334-1951-00			1	MARKER,IDENT:MKD WARNING,CRT VOLTAGES	TK0860	ORDER BY DESC
-62	337-2931-01			1	SHIELD,CRT: ATTACHING PARTS	0J9P9	337-2931-01
-63	211-0337-00			4	SCREW,MACHINE:4-40 X 0.25,PNH,SST END ATTACHING PARTS	TK0435	ORDER BY DESC
-64	200-0917-01			1	COVER,CRT SKT:2.052 OD X 0.291 H,PLASTIC	0JR05	ORDER BY DESC
-65	--------			1	WIRE SET,ELEC:W/CRT SOCKET (SEE A9P900,W900)		
-66	214-0291-00			2	CONTACT,ELEC:CRT CONNECTOR,CU BE ATTACHING PARTS	04811	ORDER BY DESC
-67	211-0324-00			2	SCR,ASSEM WSHR:4-40 X 0.188,PNH,T9	0KB01	ORDER BY DESC
-68	210-0586-00			2	NUT,PL,ASSEM WA:4-40 X 0.25,STL END ATTACHING PARTS	TK0435	ORDER BY DESC
-69	--------			1	COIL,TUBE DEFL: (SEE L90 REPL)		
-70	348-0762-00			1	GROMMET,PLASTIC:NATURAL,ROUND,0.54 ID	0JR05	ORDER BY DESC
-71	195-6851-01			1	LEAD,ELECTRICAL:BRAIDED,1.65 L ATTACHING PARTS	TK1386	ORDER BY DESC
-72	211-0337-00			2	SCREW,MACHINE:4-40 X 0.25,PNH,SST	TK0435	ORDER BY DESC
-73	210-0551-00			2	NUT,PLAIN,HEX:4-40 X 0.25,STL END ATTACHING PARTS	TK0435	ORDER BY DESC
-74	--------			1	CKT BD ASSY:DYNAMIC CENTERING (SEE A14) ATTACHING PARTS		
-75	361-0067-00			3	SPACER,CKT BD:0.187,NYLON END ATTACHING PARTS CIRCUIT BD ASSY INCLUDES:	02768	215-150912-00
-76	--------			1	TEMINAL,PIN: (SEE A14J141 REPL)		
-77	175-4596-00			1	CA ASSY,SP,ELEC:5,22 AWG,7.0 L,RIBBON	TK0753	ORDER BY DESC
-78	348-0757-00			1	GROMMET,PLASTIC:BLACK,U SHAPE,0.25 ID	TK1166	ORDER BY DESC
-79	343-0081-00			1	STRAP,RETAINING:0.125 DIA,NYLON ATTACHING PARTS	85480	CPNY-172BK
-80	210-0457-00			1	NUT,PL,ASSEM WA:6-32 X 0.312,STL END ATTACHING PARTS	TK0435	ORDER BY DESC
-81	348-0763-00			1	GROMMET,PLASTIC:NATURAL,OVAL,1.235 ID	0JR05	ORDER BY DESC
-82	348-0751-00			1	GROMMET,PLASTIC:NATURAL,3.11 X 0.645	0JR05	ORDER BY DESC
-83	343-1012-00			2	RETAINER,CKT BD:POLYCARBONATE	TK1173	ORDER BY DESC
-84	441-1618-02	B010100	B049999	1	CHASSIS,SCOPE:MAIN	0J9P9	ORDER BY DESC
	441-1896-00	B050000		1	CHASSIS,SCOPE:MAIN ASSY,AL,W/HARDWARE	0J9P9	ORDER BY DESC
-85	337-3438-00			1	SHIELD,ELEC:ANODE LEAD ATTACHING PARTS	0J9P9	ORDER BY DESC
-86	211-0747-00			2	SCREW,MACHINE:6-32 X 0.188,PNH,STL END ATTACHING PARTS	0KB01	ORDER BY DESC

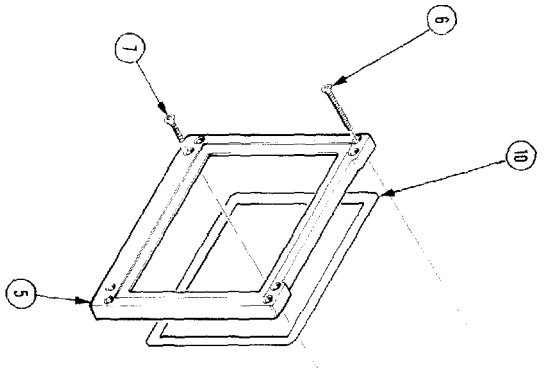
9
10
1
5

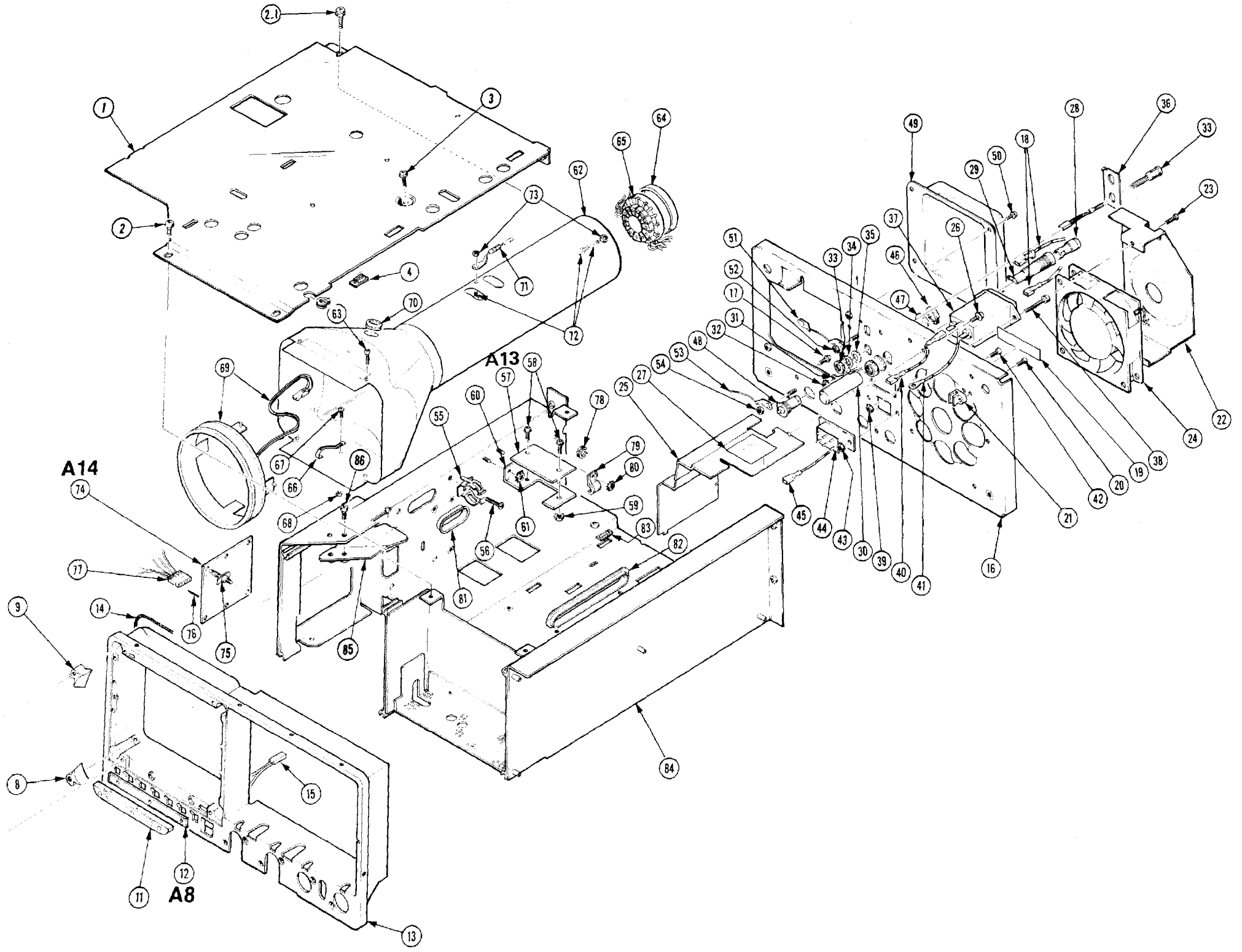

FIG. 3 CHASSIS

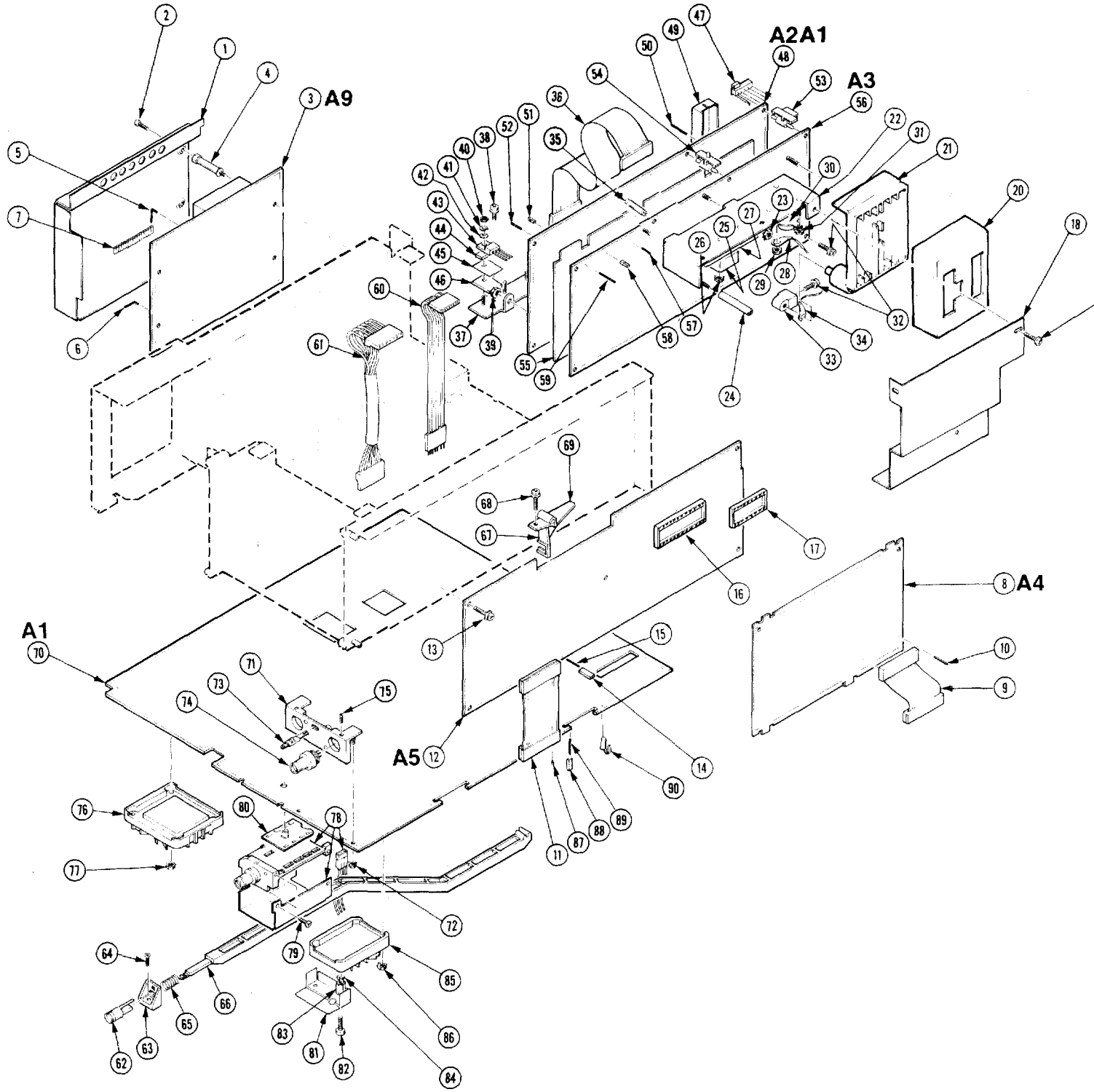

2465B ILLUSTRATIONS
2465B/2467B SERVICE

REV MAR 1989

FIG. 4 CIRCUIT BOARDS

Fig. & Index No.	Tektronix Part No.	Serial No. Effective	Dscont	Qty	12345 Name & Description	Mfr. Code	Mfr. Part No.
4-1	337-2932-01			1	SHIELD,ELEC:HIGH VOLTAGE ATTACHING PARTS	TK1160	ORDER BY DESC
-2	211-0304-00			4	SCR,ASSEM WSHR:4-40 X 0.312,PNH,STL,T9 END ATTACHING PARTS	0KB01	ORDER BY DESC
-3	--------			1	CKT BOARD ASSY:HIGH VOLTAGE (SEE A9 REPL) ATTACHING PARTS		
-4	361-1188-00			4	SPACER,POST:1.15 L,4-40 THD ONE END,STL END ATTACHING PARTS	93907	ORDER BY DESC
					CIRCUIT BD ASSY INCLUDES:		
	344-0329-00			2	.CLIP,ELECTRICAL:PCB,;FEMALE,STR	S3629	0G 751.0052
-5	--------			1	HEADER,MICROCKT: (SEE A9P191 REPL)		
-6	--------			1	TERMINAL,PIN: (SEE A9J901 THRU J904 REPL)		
-7	352-0661-00			1	.HOLDER,TERMINAL:17 SQUARE PINS	TK1167	ORDER BY DESC
-8	--------			1	CKT BOARD ASSY:READOUT (SEE A4 REPL)		
-9	--------			1	CA ASSY,SP,ELEC: (SEE A4W411 ONLY)		
-10	131-0608-00	B010100	B049999	7	.TERMINAL,PIN:PRESSFIT/PCB,;MALE,STR	22526	48283-018
-11	--------			1	CA ASSY,SP,ELEC: (SEE A5W511 REPL)		
	--------			1	CA ASSY,SP,ELEC: (SEE A5W512 REPL)		
-12	--------			1	CKT BOARD ASSY:DIGITAL CONT(SEE A5 REPL)		
	--------			1	CKT BD ASSY:CONT/READOUT/BUFF (SEE A5) ATTACHING PARTS		
-13	211-0711-00			5	SCR,ASSEM WSHR:6-32 X 0.25,PNH,STL,T15 END ATTACHING PARTS	0KB01	ORDER BY DESC
	386-5893-00	B050000		5	CIRCUIT BD ASSY INCLUDES: .SPACER,CKT BD:0.26 H,ACETAL	TK1163	ORDER BY DESC
-14	131-3957-00	B010100	B049999	2	.BUS,CONDUCTOR:SHUNT,1 X 2,0.1 CTR	22526	68786-202
-15	--------			6	TERMINAL,PIN: (SEE A5J501,J503,TP2070, TP2420,TP2421,TP2701 REPL)		
-16	136-0757-00	B010100	B049999	1	.SOCKET,DIP:PCB,;FEMALE,STR,2 X 20,40 POS	09922	DILB40P-108
-17	136-0755-00	B010100	B049999	2	.SOCKET,DIP:PCB,;FEMALE,STR,2 X 14,28 POS (SEE A5XU2360 REPL)	09922	DILB28P-108
	334-4759-00			1	MARKER,IDENT:MKD SHIELDS INVERTER	07416	ORDER BY DESC
-18	337-2978-00			1	SHIELD,ELEC:LOW VOLTAGE POWER SUPPLY ATTACHING PARTS	TK1165	80630-000
-19	211-0304-00			2	SCR,ASSEM WSHR:4-40 X 0.312,PNH,STL,T9 END ATTACHING PARTS	0KB01	ORDER BY DESC
-20	407-3436-00			1	BRKT,CMPNT MTG:CAP,TOP,ALUMINUM	TK1905	407-3436-00
	407-2830-01			1	BRKT,CMPNT MTG:CAP. & MOTOR,LEFT,PLASTIC (OPTION 10 ONLY)	TK1163	ORDER BY DESC
-21	407-3437-00			1	BRKT,CMPNT MTG:CAP,BOTTOM,PLASTIC	TK1905	407-3437-00
	407-2829-00			1	BRKT,CMPNT MTG:CAP.& MOTOR,RIGHT,PLASTIC (OPTION 10 ONLY)	TK1163	ORDER BY DESC
-22	407-2854-00			1	BRACKET,ANGLE:TRANSISTOR,ALUMINUM ATTACHING PARTS	92101	ORDER BY DESC
-23	210-0586-00			5	NUT,PL,ASSEM WA:4-40 X 0.25,STL END ATTACHING PARTS	TK0435	ORDER BY DESC
-24	129-0304-00			1	SPACER,POST:1.265 L,4-40 EA END,NYLON	TK0588	ORDER BY DESC
-25	343-1025-00			3	RETAINER,XSTR:POLYPHENYLENE ATTACHING PARTS	0JR05	ORDER BY DESC

Fig. & Index No.	Tektronix Part No.	Serial No. Effective	Dscont	Qty	12345 Name & Description	Mfr. Code	Mfr. Part No.
4-26	210-0406-00			3	NUT,PLAIN,HEX:4-40 X 0.188,BRS END ATTACHING PARTS	73743	12161-50
-27	342-0582-00			3	INSULATOR,PLATE:TRANSISTOR,CERAMIC	80009	342058200
-28	195-6852-00			1	LEAD,ELECTRICAL:18 AWG,2.375 L,8-4 ATTACHING PARTS	0J7N9	ORDER BY DESC
-29	210-0586-00			1	NUT,PL,ASSEM WA:4-40 X 0.25,STL END ATTACHING PARTS	TK0435	ORDER BY DESC
-30	342-0354-00			1	INSUL,PLATE:TRANSISTOR,SILICONE RUBBER ATTACHING PARTS	55285	7403-09FR-52
-31	210-0586-00			2	NUT,PL,ASSEM WA:4-40 X 0.25,STL END ATTACHING PARTS	TK0435	ORDER BY DESC
-32	211-0711-00			3	SCR,ASSEM WSHR:6-32 X 0.25,PNH,STL,T15	0KB01	ORDER BY DESC
-33	129-0912-01			1	SPACER,POST:0.658 L.6-32 BOTH ENDS,AL	TK1465	ORDER BY DESC
-34	195-9720-01			1	LEAD,ELECTRICAL:18 AWG,2.4 L,0-N	0J7N9	ORDER BY DESC
-35	361-1536-00	B050000	B050687	1	SPACER,CKT BD:0.375 L,NYLON	06915	MSPM-6-01
	361-1536-01	B050688		1	SPACER,CKT BD:0.375 L,NYLON	06915	MSPM-6-01
					SUBPARTS OF A2A1 BOARD INCLUDE:		
-36	--------			1	CA ASSY,SP,ELEC: (SEE A2A1W251 REPL)		
-37	407-2825-00			1	.BRACKET,ANGLE:TRANSISTOR MTG,ALUMINUM ATTACHING PARTS	TK1160	ORDER BY DESC
-38	211-0337-00			3	.SCREW,MACHINE:4-40 X 0.25,PNH,SST	TK0435	ORDER BY DESC
-39	210-0586-00			3	.NUT,PL,ASSEM WA:4-40 X 0.25,STL END ATTACHING PARTS	TK0435	ORDER BY DESC
-40	210-0406-00			5	.NUT,PLAIN,HEX:4-40 X 0.188,BRS	73743	12161-50
	129-0230-00			1	.SPACER,POST:1.375 L,4-40 EA END,BRS	TK0588	129-0230-00
-41	210-1307-00			6	.WASHER,LOCK:0.115 ID,SPLIT,0.025 THK,SI BRZ	0KB01	ORDER BY DESC
-42	210-1002-00			6	.WASHER,FLAT:0.125 ID X 0.25 OD X 0.022,BRS	12327	ORDER BY DESC
-43	--------			5	XSTR:(SEE A2Q1220,Q1240,Q1300,U1260,U1330)		
-44	342-0536-00			6	.INSULATOR,XSTR:TO-220,POLYENELENE	0JR05	ORDER BY DESC
-45	342-0354-00			6	.INSUL,PLATE:TRANSISTOR,SILICONE RUBBER	55285	7403-09FR-52
-46	361-1207-00			6	.SPACER,PLATE:0.550 X 0.812,AL (TRANSISTOR)	TK1299	1207-11
-47	343-1067-01			4	.RTNR,ELEC CONN:POLYCARBONATE,BLACK	TK1905	ORDER BY DESC
	343-1099-01			1	.RTNR,POWER SPLY:LOW VOLTAGE,FRONT,PC	TK1905	ORDER BY DESC
	344-0329-00			2	.CLIP,ELECTRICAL:PCB,;FEMALE,STR	S3629	0G 751.0052
-48	--------			1	CKT BOARD ASSY:REGULATOR(SEE A2A1 REPL) (AVAILABLE AS 672-1037-XX ONLY)		
-49	200-2735-00			1	.COVER,POWER SW:BLACK,POLYCARBONATE,	0JR05	ORDER BY DESC
-50	--------			AR	TERMINAL,PIN: (SEE REPL FOR CKT NUMBERS)		
-51	136-0263-07			13	.SOCKET,CONTACT:PCB,;FEMALE,STR	22526	76215-002
-52	--------			AR	TERM,QIK DISC: (SEE A2J204 THRU J207)		
-53	129-0976-00			1	SPACER,POST:0.86 L X 6-32,POLYCARB	TK1167	ORDER BY DESC
-54	361-1132-01	B010100	B049999	4	SPACER,CKT BD:A POLYCARBONATE	TK1167	ORDER BY DESC
	361-1132-01	B050000		3	SPACER,CKT BD:A POLYCARBONATE	TK1167	ORDER BY DESC
-55	337-3059-00			1	SHIELD,ELEC:LVPS	07416	58600-000
-56	--------			1	CKT BOARD ASSY:INVERTER(SEE A3 REPL)		
-57	--------			1	TERMINAL,PIN: (SEE A3J301,J302 REPL)		
-58	136-0263-07			18	.SOCKET,CONTACT:PCB,;FEMALE,STR	22526	76215-002

Fig. & Index No.	Tektronix Part No.	Serial No. Effective	Dscont	Qty	12345 Name & Description	Mfr. Code	Mfr. Part No.
4-59	131-0589-00			4	.TERMINAL,PIN:PRESSFIT/PCB,;MALE,STR	22526	48283-087
-60	--------			1	CA ASSY,SP,ELEC: (SEE A1W121 REPL)		
-61	--------			1	CA ASSY,SP,ELEC: (SEE A1W122 REPL)		
-62	366-1767-00			1	PUSH BUTTON:BLACK,YELLOW INDICATOR	31918	160597
-63	407-2904-01			1	BRACKET,EXT SFT:POLYCARBONATE ATTACHING PARTS	TK1905	ORDER BY DESC
-64	211-0718-00			1	SCREW,MACHINE:6-32 X 0.312,FLH,STL END ATTACHING PARTS	0KB01	ORDER BY DESC
-65	214-3328-00			1	SPRING,HLCPS:0.37 OD X 0.7 L,CLE,SST	8X345	ORDER BY DESC
-66	384-1631-00			1	EXTENSION SHAFT:12.897 L X 0.375 OD,PLSTC	TK1905	ORDER BY DESC
-67	407-2800-00			1	BRACKET,PIVOT:EXTENTION SHAFT,PLASTIC ATTACHING PARTS	TK1905	ORDER BY DESC
-68	211-0711-00			1	SCR,ASSEM WSHR:6-32 X 0.25,PNH,STL,T15 END ATTACHING PARTS	0KB01	ORDER BY DESC
-69	407-2803-00			1	BRACKET,PVT ARM:EXTENSION SHAFT,PLASTIC	TK1905	ORDER BY DESC
-70	--------			1	CKT BOARD ASSY:MAIN (SEE A1 REPL)		
	195-3985-00			1	.LEAD,ELECTRICAL:26 AWG,1.7 L,9-N	TK0753	ORDER BY DESC
-71	386-4735-01			1	.PLATE,CMPNT MTG:ALUMINUM ATTACHING PARTS	TK1169	ORDER BY DESC
-72	210-0586-00			2	.NUT,PL,ASSEM WA:4-40 X 0.25,STL	TK0435	ORDER BY DESC
	361-0382-00			2	.SPACER,PB SW:0.275 L,BROWN POLYCARB END ATTACHING PARTS	0JR05	ORDER BY DESC
-73	131-2716-01			1	.TERMINAL,CAL:	TK1163	ORDER BY DESC
-74	131-0679-02			2	.CONN,RF RCPT:BNC,;50 OHM,FEMALE,STR ATTACHING PARTS	TK0l0	BNC340-BR-1
-75	213-0006-00			2	.SETSCREW:8-32 X 0.188,STL END ATTACHING PARTS	TK0433	ORDER BY DESC
-76	--------			9	MICROCIRCUIT,LI: (SEE A1U700 SHOWN,ALSO SEE A1U100,200,300,400,500,600,900,950 REPL) ATTACHING PARTS		
-77	210-0586-00			31	.NUT,PL,ASSEM WA:4-40 X 0.25,STL END ATTACHING PARTS	TK0435	ORDER BY DESC
-78	--------			2	ATTENUATOR,VAR:(SEE A1A11,A1A12 REPL) ATTACHING PARTS		
-79	211-0304-00			4	.SCR,ASSEM WSHR:4-40 X 0.312,PNH,STL,T9 END ATTACHING PARTS	0KB01	ORDER BY DESC
-80	351-0677-01			2	.GUIDE,MAG CATCH:BLACK,PLOYCARBONATE	TK1905	351-0677-01
	214-2270-00			3	.CONTACT,ELEC:CRT TO SHLD,CU-BE ATTACHING PARTS	5Y400	ORDER BY DESC
	211-0324-00			3	.SCR,ASSEM WSHR:4-40 X 0.188,PNH,T9 END ATTACHING PARTS	0KB01	ORDER BY DESC
-81	337-3031-00			2	.SHIELD,ELEC:PRE-AMP ATTACHING PARTS	TK1585	ORDER BY DESC
-82	211-0324-00			2	.SCR,ASSEM WSHR:4-40 X 0.188,PNH,T9 END ATTACHING PARTS	0KB01	ORDER BY DESC
-83	129-0985-00			5	.SPACER,POST:0.350 L,4-40 THRU,STL,0.25HEX	TK1287	ORDER BY DESC
-84	210-0003-00			2	.WASHER,LOCK:#4 EXT,0.015 THK,STL	0KB01	ORDER BY DESC
-85	214-0973-00	B010100	B051757	1	.HEAT SINK,XSTR:TO-92,CU BE	80009	214097300
	162-0533-00	B051758		1	.INSUL SLVG,ELEC:HT SHRINK,0.25 ID ATTACHING PARTS	06090	VERSAFIT

Fig. & Index No.	Tektronix Part No.	Serial No. Effective	Dscont	Qty	12345 Name & Description	Mfr. Code	Mfr. Part No.
4-86	210-0586-00			2	.NUT,PL,ASSEM WA:4-40 X 0.25,STL END ATTACHING PARTS	TK0435	ORDER BY DESC
-87	136-0252-07			32	.SOCKET,PIN TERM:SINGLE,PCB,T/G,0.030 H	22526	75060-012
	136-0727-00			1	.SOCKET,DIP:PCB,;FEMALE,STR,2 X 4,8 POS	09922	DILB8P-108
	136-0729-00			1	.SOCKET,DIP:PCB,;FEMALE,STR,2 X 8,16 POS	09922	DILB16P-108T
-88	131-3957-00			6	.BUS,CONDUCTOR:SHUNT,1 X 2,0.1 CTR,JUMPER,0. .2 H,LOW PROFILE,BLACK	22526	68786-202
-89	--------			1	TERMINAL,PIN: (SEE REPL FOR CKT NUMBERS)		
	344-0412-00			1	.CLIP,GROUND:C CLIP,BE-CU	TK1326	PER TEK DRAWING
-90	343-0088-00			1	.CLAMP,CABLE:0.062 DIA,PLASTIC	80009	343008800

Fig. & Index No.	Tektronix Part No.	Serial No. Effective	Dscont	Qty	12345 Name & Description	Mfr. Code	Mfr. Part No.
					STANDARD ACCESSORIES		
5-1	161-0104-06			1	CABLE ASSY,PWR,:3 X 0.75MM SQ,220V,98.0 L (OPTION A1 - EUROPEAN)	S3109	VIIGSOPO-HO5VVF
-2	161-0104-08			1	CABLE ASSY,PWR,:3,18 AWG,98 L,SVT,GREY/BLK (OPTION A4 - NORTH AMERICAN)	70903	ORDER BY DESC
-3	161-0104-07			1	CABLE ASSY,PWR,:3,1.0MM SQ,240 VOLT,2.5 M (OPTION A2 - UNITED KINGDOM)	S3109	ORDER BY DESC
-4	161-0167-00			1	CABLE ASSY,PWR,:3.0 X 0.75,6A,240V,2.5M (OPTION A5 - SWITZERLAND)	S3109	ORDER BY DESC
-5	161-0104-05			1	CABLE ASSY,PWR,:3,18 AWG,240V,98.0 L (OPTION A3 - AUSTRALIAN)	S3109	SAA/3-OD3CCFC3X
-6	134-0016-01			1	ADAPTER,CONN:BANANA W/BINDING POST	0J260	ORDER BY DESC
-7	159-0021-00			1	FUSE,CARTRIDGE:3AG,2A,250V,FAST BLOW	71400	AGC-2
-8	378-0208-00			1	FILTER,LT,CRT:CLEAR,4.105 X 3.415,POLYCARB	TK0657	101-7 LEXAN
-9	--------			1	ACCESSORY ASSY:2,P6137 PROBES W/ACCESS		
-10	016-0537-00			1	POUCH,ACCESSORY:6 IN X 9 IN W/ZIPPER	05006	ZIP-6X9ID
-11	200-3199-01			1	COVER,FRONT:ABS	0JR05	ORDER BY DESC
-12	386-4849-00			1	PLATE,MOUNTING:ACCESSORY POUCH,AL	TK1165	ORDER BY DESC
-13	016-0692-00			1	POUCH,ACCESSORY:2465/2445	0JRZ2	ORDER BY DESC
-14	161-0104-00			1	CABLE ASSY,PWR,:3,18 AWG,98 L,SVT,GREY/BLK	0B445	MC6 -3 CG86
-15	343-0003-00			1	CLAMP,LOOP:0.25 ID,PLASTIC	06915	E4 CLEAR ROUND
-16	210-0863-00			1	WSHR,LOOP CLAMP:0.091 ID U/W 0.5 W	85480	C191
-17	211-0722-00			1	SCREW,MACHINE:6-32 X 0.25,PNH,STL	0KB01	ORDER BY DESC
	070-6860-00			1	MANUAL,TECH:OPERATORS	80009	070686000
					OPTIONAL ACCESSORIES		
	016-0720-00			1	COVER,PROT:NYLON	0JRZ2	ORDER BY DESC
	016-0825-01			1	RACK MOUNT KIT:	80009	016082501
	070-5859-01			1	SHEET,TECHNICAL:INSTR,2400 SERIES	80009	070585901
	070-6282-00			1	MANUAL,TECH:INTERFACING GUIDE	80009	070628200
	070-6863-00			1	MANUAL,TECH:SERVICE,2465B/2467B	80009	070686300
	346-0199-00			1	STRAP,CARRYING:MKD TEKTRONIX	TK1623	ORDER BY DESC

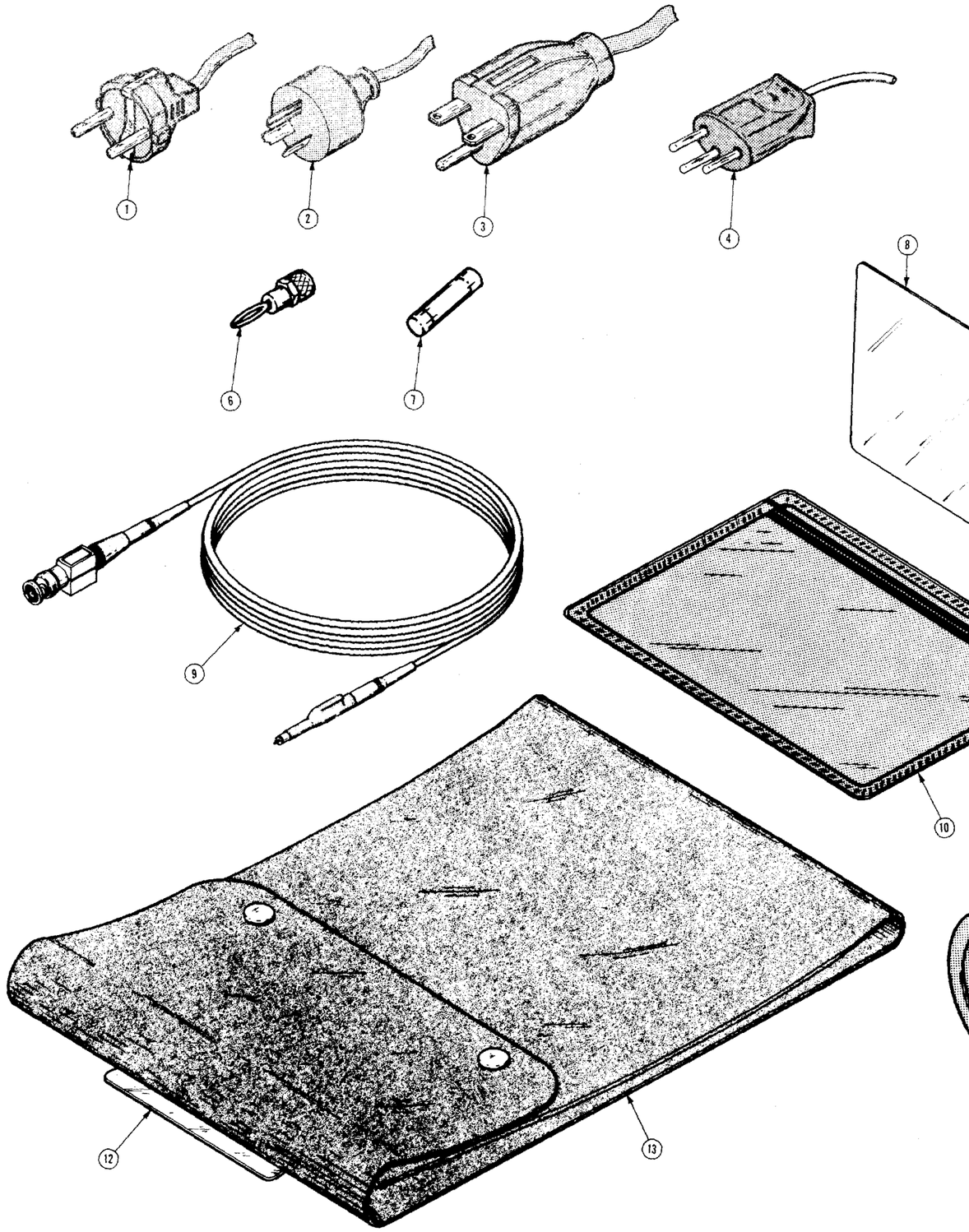
1
2
3
4
6
7
8
9
10
12
13

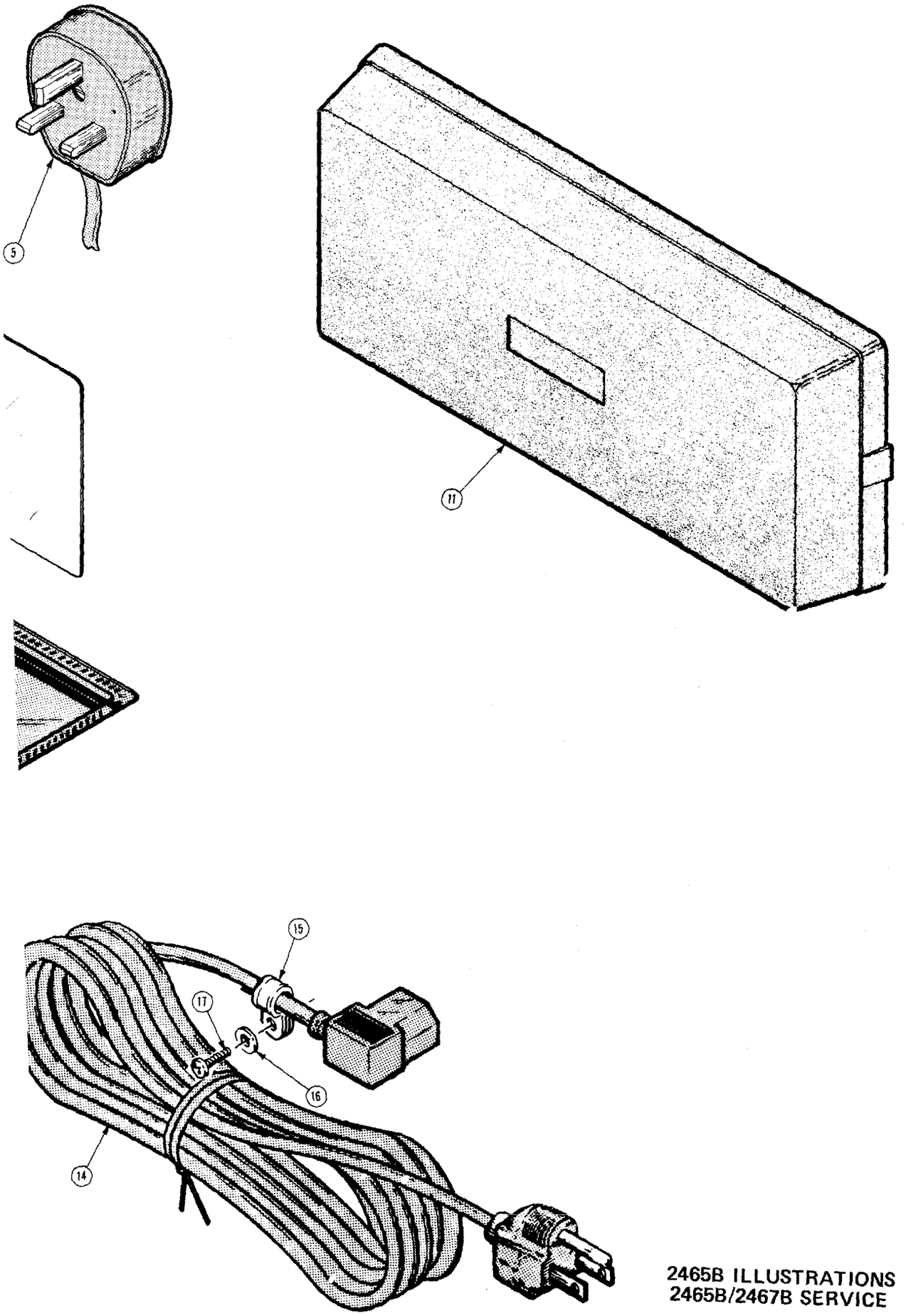

FIG. 5 ACCESSORIES

REPLACEABLE MECHANICAL PARTS

PARTS ORDERING INFORMATION

Replacement parts are available from or through your local Tektronix, Inc. Field Office or representative.

Changes to Tektronix instruments are sometimes made to accommodate improved components as they become available, and to give you the benefit of the latest circuit improvements developed in our engineering department. It is therefore important, when ordering parts, to include the following information in your order: Part number, instrument type or number, serial number, and modification number if applicable.

If a part you have ordered has been replaced with a new or improved part, your local Tektronix, Inc. Field Office or representative will contact you concerning any change in part number.

Change information, if any, is located at the rear of this manual.

ITEM NAME

In the Parts List, an item Name is separated from the description by a colon(:). Because of space limitations, an Item Name may sometimes appear as incomplete. For further Item Name identification, the U.S. Federal Cataloging Handbook H6-1 can be utilized where possible.

FIGURE AND INDEX NUMBERS

Items in this section are referenced by figure and index numbers to the illustrations.

INDENTATION SYSTEM

This mechanical parts list is indented to indicate item relationships. Following is an example of the indentation system used in the description column.

1 2 3 4 5 Name & Description

Assembly and/or Component
Attaching parts for Assembly and/or Component

END ATTACHING PARTS

Detail Part of Assembly and/or Component
Attaching parts for Detail Part

END ATTACHING PARTS

Parts of Detail Part
Attaching parts for Parts of Detail Part

END ATTACHING PARTS

Attaching Parts always appear in the same indentation as the item it mounts, while the detail parts are indented to the right. Indented items are part of, and included with, the next higher indentation.

Attaching parts must be purchased separately, unless otherwise specified.

ABBREVIATIONS

Abbreviations conform to American National Standards Institute YI.I

CROSS INDEX – MFR. CODE NUMBER TO MANUFACTURER

Mfr. Code	Manufacturer	Address	City, State, Zip Code
S3109	FELLER	72 VERONICA AVE UNIT 4	SUMMERSET NJ 08873
S3629	SCHURTER AG H C/O PANEL COMPONENTS CORP	2015 SECOND STREET	BERKELEY CA 94170
TK010	TAJIMI ELECTRONICS CO LTD	29–1, 2–CHOME EBISU–MINAMI, SHIBUYA–KU	TOKYO, JAPAP 101
TK0032	POWELL ELECTRONICS	411 FAIRCHILD DR	MT VIEW CA 94040
TK0433	PORTLAND SCREW CO		
TK0435	LEWIS SCREW CO	4300 S RACINE AVE	CHICAGO IL 60609–3320
TK0588	UNIVERSAL PRECISION PRODUCTS	1775 NW 216TH	HILLSBORO OR 97123
TK0753	RATEL ELECTRONICS	948 BENICIA AVENUE	SUNNYVALE CA 94086
TK0860	LABEL GRAPHICS	6700 SW BRADBURY CT	PORTLAND OR 97224
TK1159	IMPROVED PRODUCTS	3400 OLYMPIC STREET	SPRINGFIELD OR 97477
TK1160	MECHANICAL PRODUCTS MANUFACTURING CO	1723 1ST SO	SEATTLE WA 98134–3462
TK1163	POLYCAST INC	9898 SW TIGARD ST	TIGARD OR 97223
TK1165	STEN MFG INC	9702 85TH AVENUE N	MINNEAPOLIS MN 55369
TK1166	CIMCO INC	265 BRIGGS AVE	COSTA MESA CA 92626–4506
TK1167	COLUMBINE PLASTICS CORP	3195 BLUFF	BOULDER CO 80301–2103
TK1169	DIEMAKERS INC	801 2ND ST PO BOX 278	MONROE CITY MO 63456–1441
TK1173	ACCURATE PLASTICS & ENG INC	1921 MILLER DRIVE	LONGMONT CO 80501
TK1287	ENOCH MFG CO	14242 SE 82ND DR PO BOX 98	CLACKAMAS OR 97015
TK1299	ENGEL TOOL & DIE	1055 S BERTELSEN	EUGENE OR 97402
TK1302	MOUNTAIN MOLDING	606 SECOND STREET	BERTHOUD CO 80513
TK1326	NORTHWEST FOURSLIDE INC	18224 SW 100TH CT	TUALATIN OR 97062
TK1328	NIDEC AMERICA CORP	682 TRANSFER RD	ST PAUL MN 55114
TK1386	PYRAMID ELECTRONICS SUPPLY INC	9757 JUANITA DRIVE NE	KIRKLAND WA 98034
TK1404	NORTHWEST MANUFACTURING	15120 NE 92 STREET	REDMOND WA 98052
TK1465	BEAVERTON PARTS MFG CO	1800 NW 216TH AVE	HILLSBORO OR 97124–6629
TK1585	POFCO INC	12805 SE CAPPS RD PO BOX 307	CLACKAMAS OR 97015–8903
TK1592	W AND W METAL	6521 SE CROSSWHITE WAY	PORTLAND OR 97206
TK1614	STUCKEL R J CO	1385 HOWARD ST	ELK GROVE VILLAGE IL 60007–2213
TK1623	STARKOR MFG	3454 NE HWY 101	LINCOLN CITY OR 97367
TK1905	PUGET CORP OF OREGON	7440 S W BONITA	TIGARD OR 97223
0B445	ELECTRI–CORD MFG CO INC	312 EAST MAIN ST	WESTFIELD PA 16950
0JRZ2	BADGLEY MFG CO	1620 NE ARGYLE	PORTLAND OR 97211
0JR05	TRIQUEST CORP	3000 LEWIS AND CLARK HWY	VANCOUVER WA 98661–2999
0J260	COMTEK MANUFACTURING OF OREGON (METALS)	PO BOX 4200	BEAVERTON OR 97076–4200
0J7N9	MCX INC	30608 SAN ANTONIO ST	HAYWARD CA 94544

CROSS INDEX – MFR. CODE NUMBER TO MANUFACTURER

Mfr. Code	Manufacturer	Address	City, State, Zip Code
0J9P9	GEROME MFG CO INC	PO BOX 737	NEWBERG OR 97132
0KB00	SCHRAMM PLASTIC FABRICATIORS	7885 SW HUNZIKER	TIGARD OR 97223
0KB01	STAUFFER SUPPLY	810 SE SHERMAN	PORTLAND OR 97214
05006	20TH CENTURY PLASTICS INC	3628 CRENSHAW BLVD PO BOX 30231	LOS ANGELES CA 90030
06090	RAYCHEM CORP	300 CONSTITUTION DRIVE	MENLO PARK CA 94025–1111
06915	RICHCO PLASTIC CO	5825 N TRIPP AVE	CHICAGO IL 60646–6013
07416	NELSON NAME PLATE CO	3191 CASITAS	LOS ANGELES CA 90039–2410
09922	BURNDY CORP	RICHARDS AVE	NORWALK CT 06852
12327	FREEWAY CORP	9301 ALLEN DR	CLEVELAND OH 44125–4632
12887	PERMACOR ALTAIR	9540 TULLEY AVE	OAK LAWN IL 60453–3073
13103	THERMALLOY CO INC	2021 W VALLEY VIEW LN PO BOX 810839	DALLAS TX 75381
18565	CHOMERICS INC	77 DRAGON COURT	WOBURN MA 01801–1039
2K262	BOYD CORP	6136 NE 87th AVE PO BOX 20038	PORTLAND OR 97220
22526	DU PONT E I DE NEMOURS AND CO INC DU PONT ELECTRONICS DEPT	515 FISHING CREEK RD	NEW CUMBERLAND PA 17070–3007
22670	G M NAMEPLATE INC	2040 15TH AVE WEST	SEATTLE WA 98119–2728
24931	SPECIALTY CONNECTOR CO INC	2100 EARLYWOOD DR PO BOX 547	FRANKLIN IN 46131
31918	ITT SCHADOW INC	8081 WALLACE RD	EDEN PRAIRIE MN 55344–2224
5Y400	TRIAX METAL PRODUCTS INC DIV OF BEAVERTON PARTS MFG CO	1800 216TH AVE NW	HILLSBORO OR 97124–6629
53387	MINNESOTA MINING MFG CO	PO BOX 2963	AUSTIN TX 78769–2963
54583	TDK ELECTRONICS CORP	12 HARBOR PARK DR	PORT WASHINGTON NY 11550
55285	BERGQUIST CO INC THE	5300 EDINA INDUSTRIAL BLVD	MINNEAPOLIS MN 55435–3707
7X318	KASO PLASTICS INC	11015 A NE 39th	VANCOUVER WA 98662
70903	COOPER BELDEN ELECTRONICS WIRE AND CABLE SUB OF COOPER INDUSTRIES INC		
71400	BUSSMANN DIV OF COOPER INDUSTRIES INC	114 OLD STATE RD PO BOX 14460	ST LOUIS MO 63178
73743	FISCHER SPECIAL MFG CO	111 INDUSTRIAL RD	COLD SPRING KY 41076–9749
76814	NORTHERN ENGRAVING CORP	803 S BLACK RIVER ST	SPARTA WI 54656–2221
78189	ILLINOIS TOOL WORKS INC SHAKEPROOF DIV	ST CHARLES ROAD	ELGIN IL 60120
79136	WALDES KOHINOOR INC	47–16 AUSTEL PLACE	LONG ISLAND CITY NY 11101–4402
8X345	NORTHWEST SPRING & MFG CO	5858 WILLOW LANE	LAKE OSWEGO OR 97034–5343
80009	TEKTRONIX INC	14150 SW KARL BRAUN DR PO BOX 500	BEAVERTON OR 97077–0001
80033	MICRODOT MFG INC PRESTOLE EVERLOCK DIV	1345 MIAMI ST P O BOX 278	TOLEDO OH 43605
82389	SWITCHCRAFT INC SUB OF RAYTHEON CO	5555 N ELSTRON AVE	CHICAGO IL 60630–1314

CROSS INDEX – MFR. CODE NUMBER TO MANUFACTURER

Mfr. Code	Manufacturer	Address	City, State, Zip Code
85480	BRADY W H CO CORP H Q INDUSTRIAL PRODUCTS DIV	2221 W CAMDEN RD PO BOX 2131	MILWAUKEE WI 53209
86928	SEASTROM MFG CO INC	701 SONORA AVE	GLENDALE CA 91201–2431
92101	SCHULZE MFG	50 INGOLD RD	BURLINGAME CA 94010–2206
93907	TEXTRON INC CAMCAR DIV	600 18TH AVE	ROCKFORD IL 61108–5181

Fig. & Index No.	Tektronix Part No.	Serial No. Effective	Dscont	Qty	12345 Name & Description	Mfr. Code	Mfr. Part No.
1-1	334-6345-02			1	MARKER,IDENT:MARKED TEKTRONIX 2467B	22670	ORDER BY DESC
	334-7908-00			1	MARKER,IDENT:MKD 2467BHD (OPTION 5H ONLY)	22670	ORDER BY DESC
-2	366-2041-03			4	KNOB:DOVE GRAY,BAR,0.172 X 0.41 X 0.496 H	7X318	ORDER BY DESC
-3	334-6335-00			1	MARKER,IDENT:MKD CRT CONTROLS	76814	ORDER BY DESC
-4	348-0740-00			2	FOOT,CABINET:BOTTOM FRONT,PLASTIC ATTACHING PARTS	0JR05	ORDER BY DESC
-5	211-0718-00			2	SCREW,MACHINE:6-32 X 0.312,FLH,STL END ATTACHING PARTS	0KB01	ORDER BY DESC
-6	101-0110-00			1	TRIM,DECORATIVE:FRONT,POLYCARBONATE ATTACHING PARTS	80009	101011000
-7	211-0718-00			6	SCREW,MACHINE:6-32 X 0.312,FLH,STL END ATTACHING PARTS	0KB01	ORDER BY DESC
-8	200-2779-00			1	COVER,TOP:TRIM	0JR05	ORDER BY DESC
-9	354-0656-00			1	RING,FILTER:4.34 X 3.67,SLATE GRAY,PLASTIC	0JR05	ORDER BY DESC
-10	378-0270-00			1	FILTER,LT,CRT:3.0 X 3.670,BLUE ACRYLIC	0KB00	ORDER BY DESC
-11	337-2926-03			1	SHLD,IMPLOSION:4.44 X 3.67 X 0.06,CLEAR	TK1159	ORDER BY DESC
-12	334-4377-04			1	MARKER,IDENT:MKD CAUTION	07416	ORDER BY DESC
-13	334-6341-00			1	MARKER,IDENT:MKD REAR BNC	07416	ORDER BY DESC
-14	334-5696-02			1	MARKER,IDENT:MKD OPTION	07416	ORDER BY DESC
-15	200-3200-01			1	COVER,REAR:W/LABELS ATTACHING PARTS	80009	200320001
-16	212-0154-00			4	SCREW,MACHINE:8-32 X 1.125,PNH,STL END ATTACHING PARTS	0KB01	ORDER BY DESC
-17	348-0905-01			4	FOOT,CABINET:BLACK POLYURETHANE	0JR05	ORDER BY DESC
-18	367-0303-04			1	HANDLE,CARRYING:12.86 L,GRIP & INDEX ATTACHING PARTS	0JR05	ORDER BY DESC
-19	212-0144-00			2	SCREW,TPG,TF:8-16 X 0.562 L,PLASTITE END ATTACHING PARTS	0KB01	ORDER BY DESC
-20	337-2395-00			2	SHIELD,ELEC:HANDLE ATTACHING PARTS	TK1614	ORDER BY DESC
-21	213-0138-00			4	SCREW,TPG,TF:4-24 X 0.188,TYPE B,PNH,STL END ATTACHING PARTS	TK0435	TAPPING SCREW
-22	437-0286-03	B050000	B050740	1	CABINET,SCOPE:ALUMINUM	0J9P9	ORDER BY DESC
	437-0286-06	B050741		1	CABINET,SCOPE:ALUMINUM	0J9P9	ORDER BY DESC
-23	334-6346-01			1	MARKER,IDENT:MARKED 2467B	22670	ORDER BY DESC
	334-7907-00			1	MARKER,IDENT:MKD 2467BHD,HANDLE (OPTION 5H ONLY)	22670	ORDER BY DESC
-24	348-0764-03			1	SHLD GSKT,ELEK:0.125 X 0.188,34.0 L	18565	53-MN500018

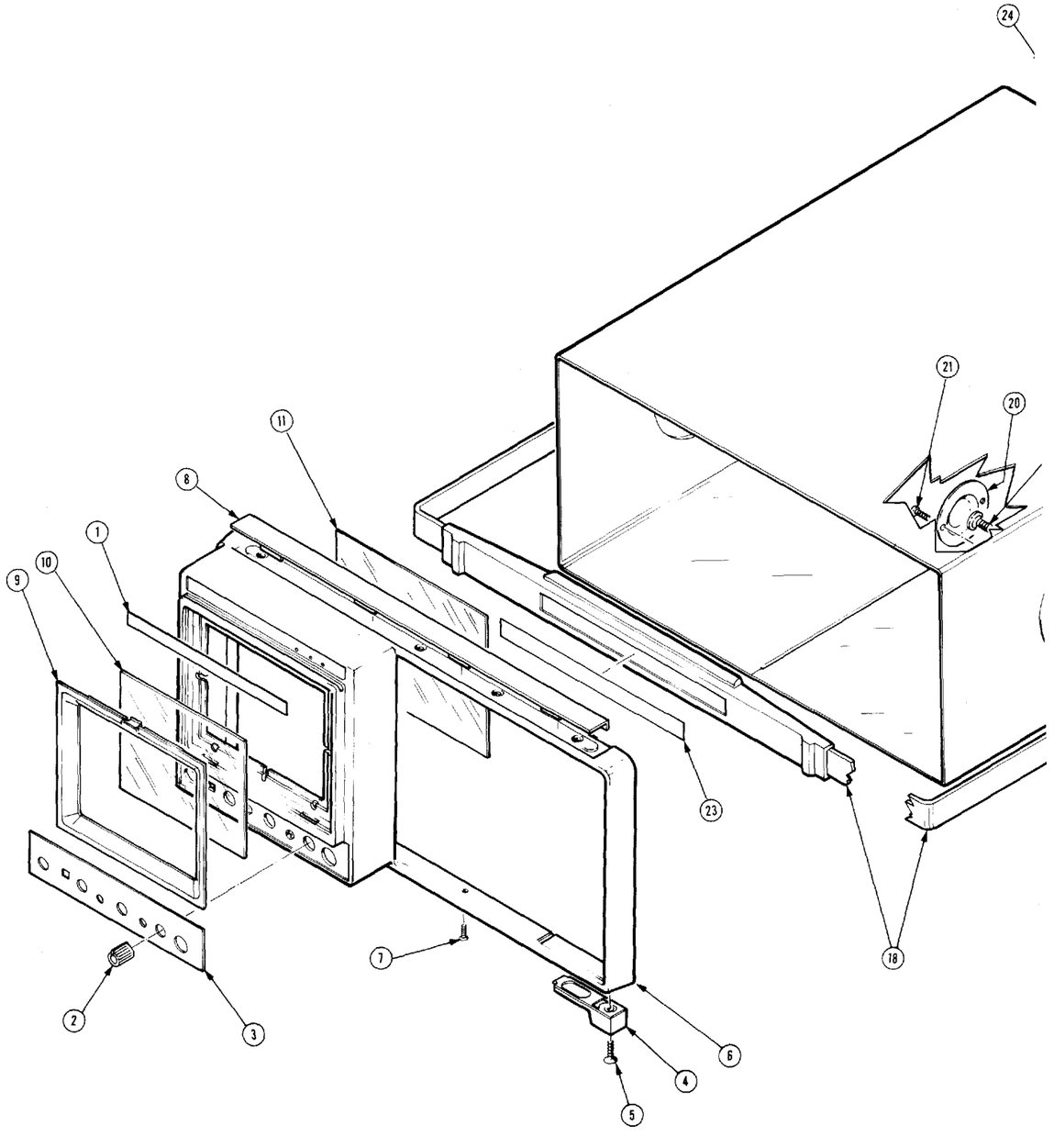
24
21
20
11
8
1
10
9
23
18
7
2
3
6
4
5

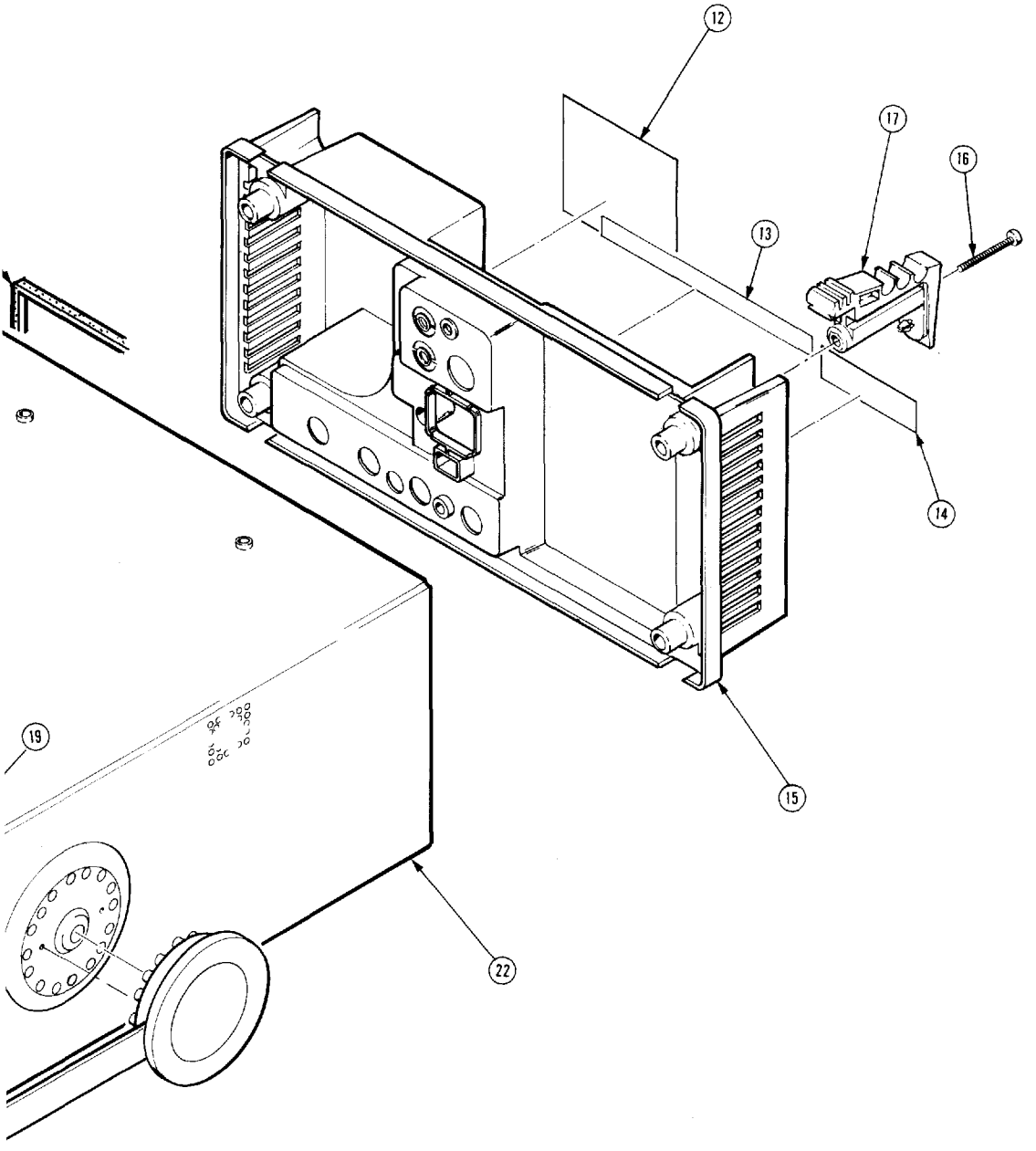

FIG. 1 CABINET

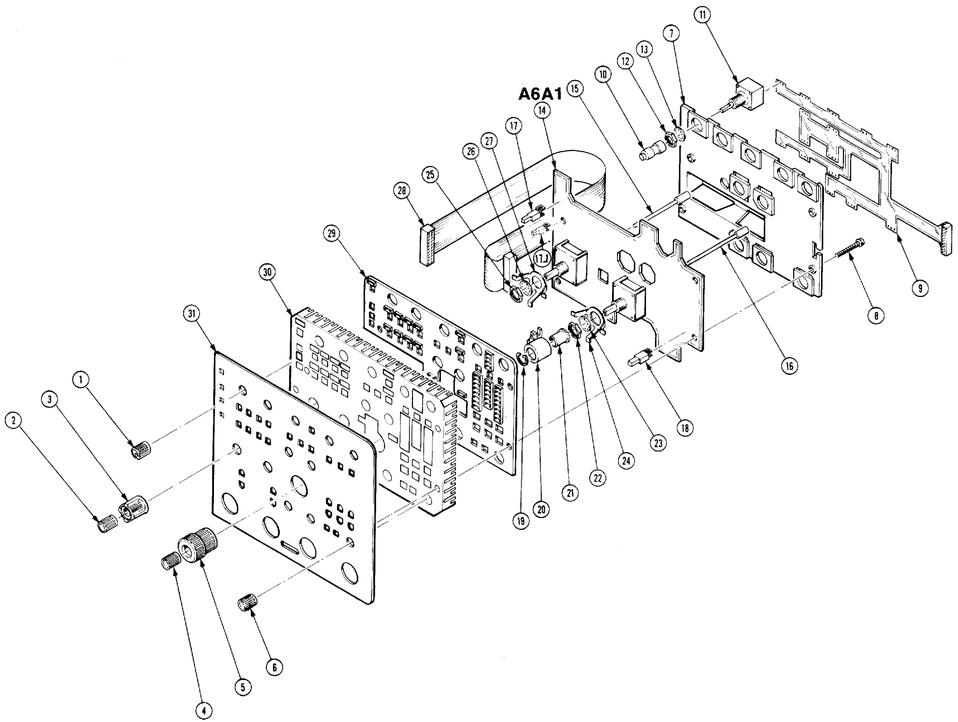

FIG. 2 FRONT PANEL MODULE

Fig. & Index No.	Tektronix Part No.	Serial No. Effective	Dscont	Qty	12345 Name & Description	Mfr. Code	Mfr. Part No.
2-1	366-2041-03			7	KNOB:DOVE GRAY,BAR,0.172 X 0.41 X 0.496 H	7X318	ORDER BY DESC
-2	366-1510-00			2	KNOB:DOVE GRAY,VAR,0.127 X 0.392 X 0.466 H	0JR05	ORDER BY DESC
-3	366-1227-00			2	KNOB:DOVE GRAY,VOLTS/DIV,0.486 X 0.706 X 0.6	TK1163	ORDER BY DESC
-4	366-1510-00			1	KNOB:DOVE GRAY,VAR,0.127 X 0.392 X 0.466 H	0JR05	ORDER BY DESC
-5	366-1220-01	B010100	B010820	1	KNOB:DOVE GRAY,TIME/DIV,0.65 X 0.855 X 0.8 H	TK1163	366-1220-01
	366-1220-02	B010821		1	KNOB:DOVE GRAY,TIME/DIV,0.44 X 0.855 X 0.84 H	TK1163	ORDER BY DESC
	377-0412-01			1	INSERT,KNOB:0.182 ID X 0.5 OD X 0.393 THK,PC	TK1163	337041201
	354-0669-00			1	RING,RETAINING:CRESENT,0.438 OD	79136	5103-43
-6	366-1833-01			3	KNOB:DOVE GRAY,0.25 ID X 0.392 OD X 0.466 H	0JR05	ORDER BY DESC
-7	352-0790-01			1	HLDR,VAR,RES:BLACK POLYCARBONATE ATTACHING PARTS	TK1163	352079001
-8	211-0302-00			4	SCR,ASSEM WSHR:4-40 X 0.75,PNH,STL END ATTACHING PARTS	0KB01	ORDER BY DESC
-9	259-0143-00			1	FLEX CIRCUIT: FRONT PANEL	80009	259014300
-10	377-0413-00			10	INSERT,KNOB:0.055 ID X 0.37 OD X 0.821,PM	TK1163	ORDER BY DESC
-11	--------			AR	RES,VAR,NONWW:(SEE A6R3007 THRU R3019) ATTACHING PARTS		
-12	210-0590-00			13	NUT,PLAIN,HEX:0.375-32 X 0.438 BRS	73743	28269-402
-13	210-0012-00			13	WASHER,LOCK:0.384 ID,INTL,0.022 THK,STL END ATTACHING PARTS	78189	1220-02-00-0541
-14	--------			1	CIRCUIT BD ASSY:FR PNL(SEE A6A1 REPL)		
-15	384-1684-01			2	.SHAFT,VARIABLE:2.16 L,POLYCARBONATE	TK1163	ORDER BY DESC
-16	384-1683-01	B010100	B010820	1	.SHAFT,VARIABLE:2.36 L,POLYCARBONATE	TK1163	ORDER BY DESC
	384-1683-02	B010821		1	.SHAFT,VARIABLE:2.46 L,POLYCARBONATE	TK1163	ORDER BY DESC
-17	366-1516-00			19	.PUSH BUTTON:IVORY GRAY,0.3 X 0.665 H,SQ	TK1163	ORDER BY DESC
-17.1	366-1516-01			1	.PUSH BUTTON:LEGEND ORANGE,0.3 X 0.655 H	TK1163	ORDER BY DESC
-18	366-1538-00			10	.PUSH BUTTON:IVORY GRAY,0.3 X 0.665 H	TK1163	ORDER BY DESC
-19	354-0669-00			1	.RING,RETAINING:CRESENT,0.438 OD	79136	5103-43
-20	214-3824-01			1	.ACTUATOR,SWITCH:TIME PER DIV	TK1163	214-3824-01
-21	377-0412-01			1	.INSERT,KNOB:0.182 ID X 0.5 OD X 0.393 THK,PC	TK1163	337041201
-22	210-0590-00			1	.NUT,PLAIN,HEX:0.375-32 X 0.438 BRS	73743	28269-402
-23	210-0012-00			1	.WASHER,LOCK:0.384 ID,INTL,0.022 THK,STL	78189	1220-02-00-0541
-24	214-3373-00			1	.SPRING,GROUND:PHOSPHOR-BRONZE	92101	ORDER BY DESC
-25	210-0590-00			2	.NUT,PLAIN,HEX:0.375-32 X 0.438 BRS	73743	28269-402
-26	210-0012-00			2	.WASHER,LOCK:0.384 ID,INTL,0.022 THK,STL	78189	1220-02-00-0541
-27	214-3373-00			2	.SPRING,GROUND:PHOSPHOR-BRONZE	92101	ORDER BY DESC
-28	175-9916-00			1	.CA ASSY,SP,ELEC:20,28 AWG,11.0 L	53387	175-9916-00
-29	351-0750-01			1	GUIDE,SWITCH:ABS,BLACK	TK1163	ORDER BY DESC
-30	354-0655-01			1	RING,MOUNTING:FR PNL,4.16 X 6.065,BRASS	0J260	ORDER BY DESC
-31	333-3554-00			1	PANEL,FRONT:2465B,4 BUTTON,STD(NON-TV) (STANDARD ONLY)	22670	ORDER BY DESC
	333-3555-00			1	PANEL,FRONT:2465B,4 BUTTON,TV OPTION (OPTION 05 ONLY)	22670	ORDER BY DESC
	333-3863-00			1	PANEL,FRONT:2467BHD (OPTION 5H ONLY)	22670	ORDER BY DESC

Fig. & Index No.	Tektronix Part No.	Serial No. Effective	Dscont	Qty	12345 Name & Description	Mfr. Code	Mfr. Part No.
3-1	426-2119-01			1	FRAME,CRT: ATTACHING PARTS	0J260	ORDER BY DESC
-2	211-0740-00			4	SCREW,MACHINE:6-32 X 2.25,FLH,100 DEG,STL	0KB01	ORDER BY DESC
-3	211-0739-00			4	SCREW,MACHINE:6-32 X 1.75,FLH,100 DEG,STL END ATTACHING PARTS	0KB01	ORDER BY DESC
-4	348-0731-01	B010100	B051422	1	GASKET:CRT,POLYETHYLENE	TK1159	ORDER BY DESC
	348-0731-02	B051423		1	GASKET:CRT,CLEAR,POLYCARBONATE	80009	
-5	378-0204-00			1	REFLECTOR,LIGHT:INT SCALE ILLUMINATION	7X318	ORDER BY DESC
-6				1	CKT BD ASSY:SCALE ILLUM (SEE A8 REPL)		
-7	361-1349-00			1	SPACER,MTG:2.0 L X 0.25 W X 1.0 THK ABS	0JR05	ORDER BY DESC
-8	386-4728-04			1	SUBPANEL,FRONT: ATTACHING PARTS	0J260	ORDER BY DESC
-9	213-0978-00			6	SCREW,TPG,TR:6-32 X 0.5,FLH,STL,T10 END ATTACHING PARTS	0KB01	ORDER BY DESC
-10	386-4699-00			1	BAR,SUPPORT:ATTENUATOR,AL ATTACHING PARTS	TK1169	ORDER BY DESC
-11	211-0718-00			2	SCREW,MACHINE:6-32 X 0.312,FLH,STL END ATTACHING PARTS	0KB01	ORDER BY DESC
-12	343-0993-00			2	RETAINER,CRT:BLACK,PLASTIC	TK1163	ORDER BY DESC
-13	343-0992-00			2	RETAINER,CRT:CLEAR,PLASTIC	TK1163	ORDER BY DESC
-14	348-0792-01			1	GASKET:ELECTRICAL SHIELD,34.0 L	18565	ORDER BY DESC
-15	348-0922-00			1	GROMMET,PLASTIC:BLACK,SUBPANEL	0JR05	ORDER BY DESC
-16	175-4593-01			1	CA ASSY,SP,ELEC:2,22 AWG,3.5 L,RIBBON (SUBPART OF A8 BOARD)	0J7N9	ORDER BY DESC
-17	407-2790-02	B010100	B010696	1	BRACKET,CKT BD:VERTICAL,ALUMINUM	TK1592	ORDER BY DESC
	407-2790-03	B010697		1	BRACKET,CKT BD:ALUMINUM ATTACHING PARTS	0J9P9	407-2793-03
-18	211-0747-00	B010100	B010696	2	SCREW,MACHINE:6-32 X 0.188,PNH,STL	0KB01	ORDER BY DESC
	211-0747-00	B010697		1	SCREW,MACHINE:6-32 X 0.188,PNH,STL	0KB01	ORDER BY DESC
-19	211-0711-00			3	SCR,ASSEM WSHR:6-32 X 0.25,PNH,STL,T15	0KB01	ORDER BY DESC
-19.1	211-0711-00			1	SCR,ASSEM WSHR:6-32 X 0.25,PNH,STL,T15 END ATTACHING PARTS	0KB01	ORDER BY DESC
-20	343-1012-00			2	RETAINER,CKT BD:POLYCARBONATE	TK1173	ORDER BY DESC
-21	200-3201-01			1	COVER,CRT REAR:ABS,PLATED ATTACHING PARTS	80009	200320101
-22	211-0711-00			4	SCR,ASSEM WSHR:6-32 X 0.25,PNH,STL,T15 END ATTACHING PARTS	0KB01	ORDER BY DESC
-23	378-0275-00			1	DEFLECTOR,AIR:ALUMINUM ATTACHING PARTS	TK1160	378-0275-00
-24	211-0711-00			1	SCR,ASSEM WSHR:6-32 X 0.25,PNH,STL,T15 END ATTACHING PARTS	0KB01	ORDER BY DESC
-25	119-2102-00			1	FAN,TUBEAXIAL:12V,1.5W,3200RPM,24CFM	TK1328	119-2102-00
-26	386-4713-02			1	PLATE,REAR:POWER SUPPLY ATTACHING PARTS	0J9P9	ORDER BY DESC
-27	211-0711-00			5	SCR,ASSEM WSHR:6-32 X 0.25,PNH,STL,T15 END ATTACHING PARTS	0KB01	ORDER BY DESC
-28	195-3984-00			1	LEAD,ELECTRICAL:22 AWG,4.0 L,8-01	TK0032	ORDER BY DESC
-29	334-6652-00			1	MARKER,IDENT:MKD CAUTION BATTERY	07416	ORDER BY DESC

Fig. & Index No.	Tektronix Part No.	Serial No. Effective	Dscont	Qty	12345 Name & Description	Mfr. Code	Mfr. Part No.
3-30	386-4863-00	B010100	B049999	1	SUPPORT,CKT BD:2465 ATTACHING PARTS	7X318	ORDER BY DESC
-31	211-0304-00	B010100	B049999	1	SCR,ASSEM WSHR:4-40 X 0.312,PNH,STL,T9 END ATTACHING PARTS	0KB01	ORDER BY DESC
-32	211-0711-00			2	SCR,ASSEM WSHR:6-32 X 0.25,PNH,STL,T15	0KB01	ORDER BY DESC
-33	337-3021-01			1	SHIELD,ELEC:LVPS PEOPLE	7X318	VNDR 45448
-34	334-5196-00			1	MARKER,IDENT:MKD CAUTION	22670	ORDER BY DESC
-35	200-2264-00			1	CAP,FUSEHOLDER:3AG FUSES	S3629	FEK 031 1666
-36	204-0832-00			1	BODY,FUSEHOLDER:3AG & 5 X 20MM FUSES	S3629	031 1673 (FEU M
-37	200-0237-04			1	COVER,FUHLR:PLASTIC	0JR05	ORDER BY DESC
-38	210-0457-00			1	NUT,PL,ASSEM WA:6-32 X 0.312,STL	TK0435	ORDER BY DESC
-39	195-3986-00			1	LEAD,ELECTRICAL:18 AWG,4.0 L,8-0	TK1386	195-3986-00 REV
					OPTION 11 INCLUDES:		
-40	175-6044-01			1	.CA ASSY,SP,ELEC:4,26 AWG,6.0 L,RIBBON	0J7N9	ORDER BY DESC
-41	210-0012-00			1	.WASHER,LOCK:0.384 ID,INTL,0.022 THK,STL	78189	1220-02-00-0541
-42	210-0978-00			1	.WASHER,FLAT:0.375 ID X 0.5 OD X 0.024,STL	12327	ORDER BY DESC
-43	386-5052-00			1	.PLATE,ADAPTER:PROBE POWER,ALUMINUM	TK1592	ORDER BY DESC
-44				.	CAP,FXD,CER DI: (SEE C10 REPL)		
-45	210-0205-00			1	TERMINAL,LUG:0.172 ID,LOCKING,BRS	86928	5442-7
-46	131-0407-00			1	JACK,TELE:2 COND OPEN OR SGL CLOSED	82389	TR-2A
-47	119-1536-00			1	FILTER,RFI:3A,250VAC,50/60HZ ATTACHING PARTS	54583	ZUB2203-00
-48	211-0332-00			2	SCR,ASSEM WSHR:4-40 X 0.5,PNH,STL,T9	0KB01	ORDER BY DESC
-49	210-0586-00			2	NUT,PL,ASSEM WA:4-40 X 0.25,STL END ATTACHING PARTS	TK0435	ORDER BY DESC
-50	195-3989-00			1	LEAD,ELECTRICAL:18 AWG,4.0 L,8-9	TK0032	ORDER BY DESC
-51	195-3990-00			1	LEAD,ELECTRICAL:18 AWG,4.5 L,5-4	TK0032	ORDER BY DESC
-52	--------			1	SWITCH,SLIDE: (SEE A2S90 REPL) ATTACHING PARTS		
-53	211-0304-00			2	SCR,ASSEM WSHR:4-40 X 0.312,PNH,STL,T9	0KB01	ORDER BY DESC
-54	210-0586-00			2	NUT,PL,ASSEM WA:4-40 X 0.25,STL END ATTACHING PARTS	TK0435	ORDER BY DESC
-55	195-3987-00			1	LEAD,ELECTRICAL:22 AWG,2.6 L,8-19	TK0032	ORDER BY DESC
	195-3988-00			1	LEAD,ELECTRICAL:22 AWG,4.0 L,8-29	TK0032	ORDER BY DESC
-56	131-1910-01			1	CONN,RF JACK:BNC,;50 OHM,FEMALE,STR	24931	28JR284-1
-57	195-8410-00			1	LEAD,ELECTRICAL:22 AWG,1.65 L	TK1386	ORDER BY DESC
-58	210-0586-00			1	NUT,PL,ASSEM WA:4-40 X 0.25,STL	TK0435	ORDER BY DESC
-59	195-9513-00			1	LEAD,ELECTRICAL:22 AWG,1.4 L	TK1386	ORDER BY DESC
-60	210-0586-00			1	NUT,PL,ASSEM WA:4-40 X 0.25,STL	TK0435	ORDER BY DESC
-61	175-4599-00			1	CABLE ASSY,RF:50 OHM COAX,8.0 L	TK0753	ORDER BY DESC
-62	276-0525-00			1	CORE,EM:TOROID,FERRITE	12887	87-8673
-63	344-0250-00			1	RETAINER,CAP.:0.5 DIA,STEEL ATTACHING PARTS	80033	E-50001-007
-64	211-0747-00			1	SCREW,MACHINE:6-32 X 0.188,PNH,STL END ATTACHING PARTS	0KB01	ORDER BY DESC

Fig. & Index No.	Tektronix Part No.	Serial No. Effective	Dscont	Qty	12345 Name & Description	Mfr. Code	Mfr. Part No.
3-65	--------			1	PASSIVE NETWORK: (SEE A13 REPL)		
					ATTACHING PARTS		
-66	211-0304-00			2	SCR,ASSEM WSHR:4-40 X 0.312,PNH,STL,T9	0KB01	ORDER BY DESC
-67	210-0457-00			2	NUT,PL,ASSEM WA:6-32 X 0.312,STL	TK0435	ORDER BY DESC
					END ATTACHING PARTS		
-68	407-2809-00			1	BRACKET,ANGLE:RESISTOR,AL	92101	ORDER BY DESC
					ATTACHING PARTS		
-69	210-0583-00			2	NUT,PLAIN,HEX:0.25-32 X 0.312,BRS	73743	2X-20319-402
					END ATTACHING PARTS		
-70	337-2931-02			1	SHIELD,CRT:	0J9P9	ORDER BY DESC
-71	211-0337-00			1	SCREW,MACHINE:4-40 X 0.25,PNH,SST	TK0435	ORDER BY DESC
-72	210-0457-00			1	NUT,PL,ASSEM WA:6-32 X 0.312,STL	TK0435	ORDER BY DESC
-73	337-3301-00			1	SHLD,ANODE LEAD:	0J9P9	ORDER BY DESC
					ATTACHING PARTS		
-74	211-0337-00			2	SCREW,MACHINE:4-40 X 0.25,PNH,SST	TK0435	ORDER BY DESC
-75	210-0586-00			1	NUT,PL,ASSEM WA:4-40 X 0.25,STL	TK0435	ORDER BY DESC
					END ATTACHING PARTS		
-76	200-0616-02			1	COVER,CRT SKT:1.78 DIA X 0.2 D	80009	200061602
-77	--------			2	WIRE SET,ELEC: (SEE A9P901,W901 REPL)		
-78	--------			1	COIL,TUBE DEFL: (SEE L91 REPL)		
-79	348-0762-00			1	GROMMET,PLASTIC:NATURAL,ROUND,0.54 ID	0JR05	ORDER BY DESC
-80	334-1379-00			1	MARKER,IDENT:MKD HI VACUUM	07416	ORDER BY DESC
-81	334-1951-00			1	MARKER,IDENT:MKD WARNING,CRT VOLTAGES	TK0860	ORDER BY DESC
-82	211-0337-00			1	SCREW,MACHINE:4-40 X 0.25,PNH,SST	TK0435	ORDER BY DESC
-83	210-0551-00			1	NUT,PLAIN,HEX:4-40 X 0.25,STL	TK0435	ORDER BY DESC
-84	174-0129-00			1	CA ASSY,SP,ELEC:2,22 AWG,5.5 L,9-N	0J7N9	ORDER BY DESC
-85	348-0757-00			1	GROMMET,PLASTIC:BLACK,U SHAPE,0.25 ID	TK1166	ORDER BY DESC
-86	343-0081-00			1	STRAP,RETAINING:0.125 DIA,NYLON	85480	CPNY-172BK
					ATTACHING PARTS		
-87	210-0457-00			1	NUT,PL,ASSEM WA:6-32 X 0.312,STL	TK0435	ORDER BY DESC
					END ATTACHING PARTS		
-88	348-0763-00			1	GROMMET,PLASTIC:NATURAL,OVAL,1.235 ID	0JR05	ORDER BY DESC
-89	348-0751-00			1	GROMMET,PLASTIC:NATURAL,3.11 X 0.645 OBL	0JR05	ORDER BY DESC
-90	343-1012-00			2	RETAINER,CKT BD:POLYCARBONATE	TK1173	ORDER BY DESC
-91	441-1618-02	B010100	B049999	1	CHASSIS,SCOPE:MAIN	0J9P9	ORDER BY DESC
	441-1896-00	B050000		1	CHASSIS,SCOPE:MAIN ASSY,AL,W/HARDWARE	0J9P9	ORDER BY DESC
-92	334-3379-00			1	MARKER,IDENT:MARKED GROUND SYMBOL	07416	ORDER BY DESC
	334-6466-00			1	MARKER,IDENT:MKD CAUTION HV	07416	ORDER BY DESC

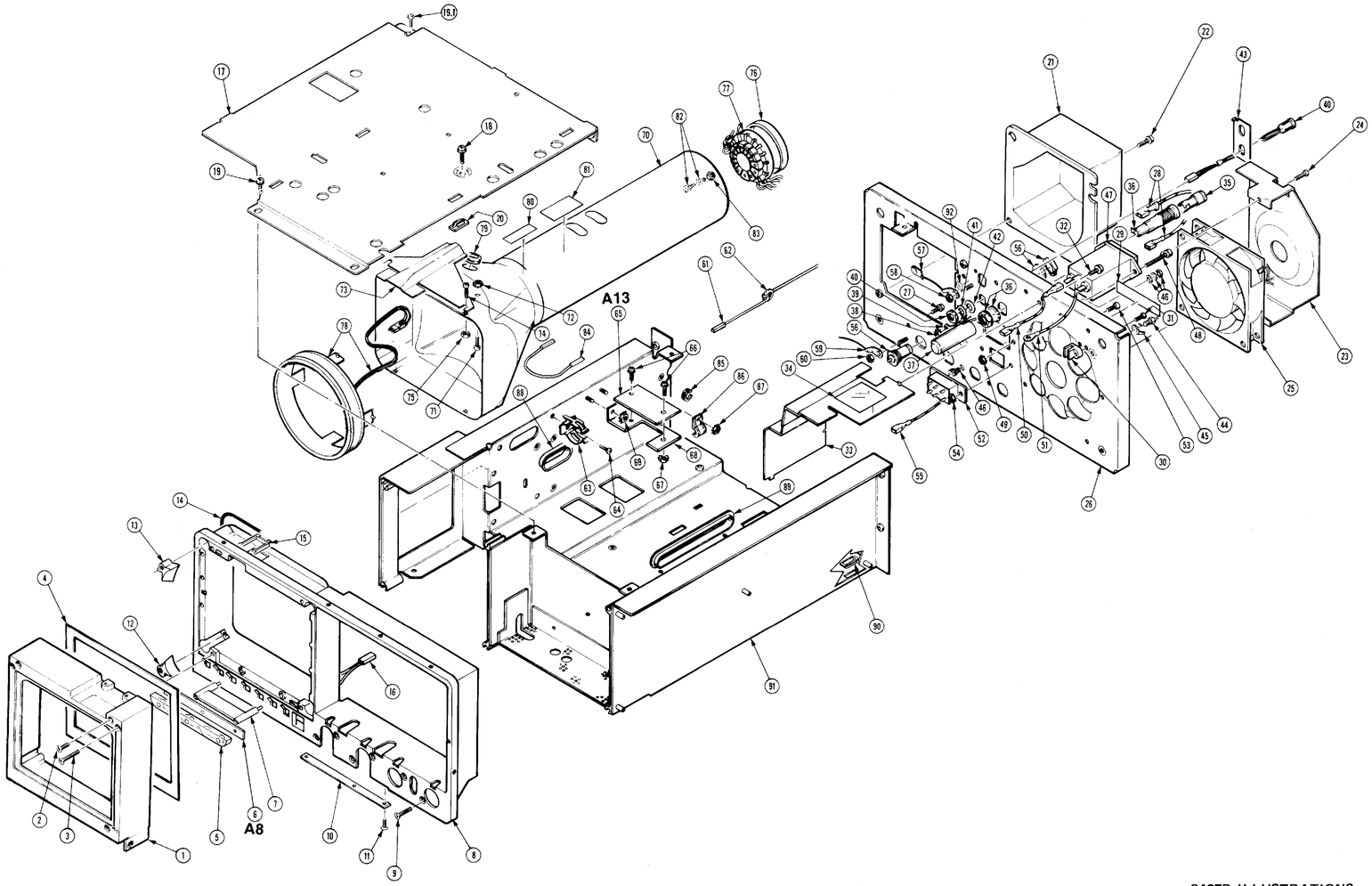

FIG. 3 CHASSIS

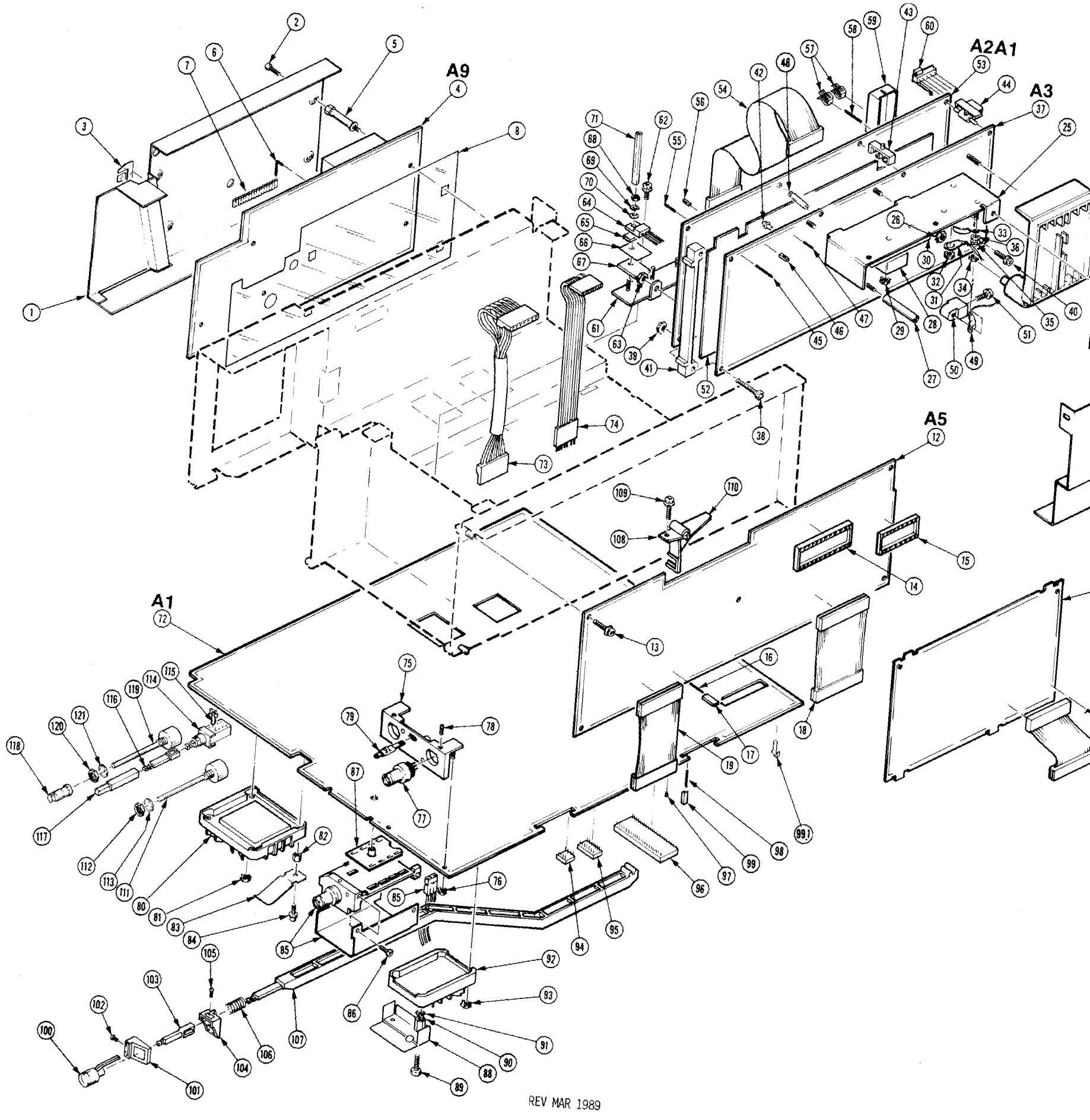

2467B ILLUSTRATIONS
2465B/2467B SERVICE

FIG. 4 CIRCUIT BOARDS

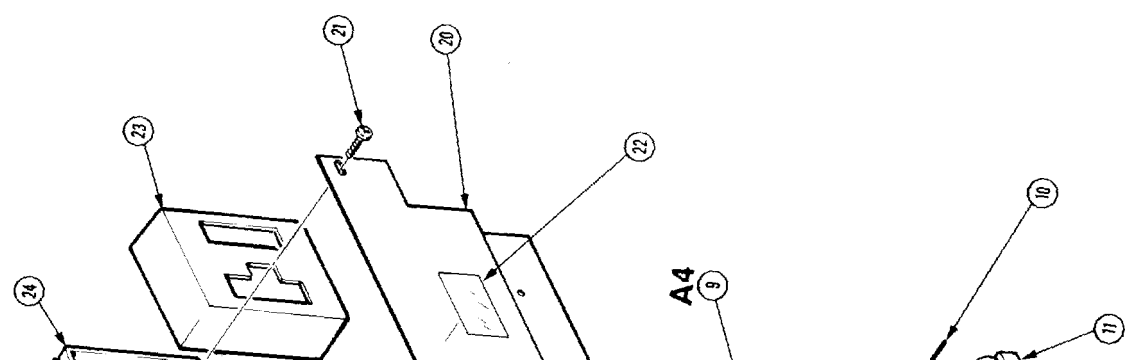

Fig. & Index No.	Tektronix Part No.	Serial No. Effective	Dscont	Qty	12345 Name & Description	Mfr. Code	Mfr. Part No.
4-1	337-3300-00			1	SHIELD,ELEC:HV ATTACHING PARTS	TK1404	ORDER BY DESC
-2	211-0304-00			4	SCR,ASSEM WSHR:4-40 X 0.312,PNH,STL,T9 END ATTACHING PARTS	0KB01	ORDER BY DESC
-3	200-3261-00			1	COVER,CABLE:HV SHIELD	2K262	ORDER BY DESC
-4	--------			1	CKT BD ASSY:HV PWR SPLY (SEE A9 REPL) ATTACHING PARTS		
-5	361-1188-00			4	SPACER,POST:1.15 L,4-40 THD ONE END,STL END ATTACHING PARTS CIRCUIT BD ASSY INCLUDES:	93907	ORDER BY DESC
-6	--------			1	TERM SET,PIN: (SEE A9P5191 REPL)		
-7	352-0789-00			1	.HOLDER,TERMINAL:20 SQ PINS	0JR05	ORDER BY DESC
-8	342-0767-00			1	INSULATOR,FILM:HV BD,POLYESTER	2K262	ORDER BY DESC
-9	--------			1	CIRCUIT BD ASSY:READOUT (SEE A4 REPL)		
-10	131-0608-00	B010100	B049999	7	.TERMINAL,PIN:PRESSFIT/PCB,:MALE,STR	22526	48283-018
-11	--------			1	CA ASSY,SP,ELEC: (SEE A4W411 REPL)		
-12	--------			1	CKT BD ASSY:DIGITAL CONTROL (SEE A5 REPL)		
	--------			1	CKT BD ASSY:CONT/READOUT/BUFF (SEE A5) ATTACHING PARTS		
-13	211-0711-00			4	SCR,ASSEM WSHR:6-32 X 0.25,PNH,STL,T15 END ATTACHING PARTS CIRCUIT BD ASSY INCLUDES:	0KB01	ORDER BY DESC
	386-5893-00	B050000		5	.SPACER,CKT BD:0.26 H,ACETAL	TK1163	ORDER BY DESC
-14	136-0757-00	B010100	B049999	1	.SOCKET,DIP:PCB,:FEMALE,STR,2 X 20,40 POS	09922	DILB40P-108
-15	136-0755-00	B010100	B049999	2	.SOCKET,DIP:PCB,:FEMALE,STR,2 X 14,28 POS (SEE A5XU2360 REPL)	09922	DILB28P-108
-16	--------			6	TERMINAL,PIN: (SEE A5J501,JJ503,TP2701, TP2070,TP2420,TP2421 REPL)		
-17	131-3957-00	B010100	B049999	2	.BUS,CONDUCTOR:SHUNT,1 X 2,0.1 CTR	22526	68786-202
-18	--------			1	CA ASSY,SP,ELEC: (SEE A5W512 REPL)		
-19	--------			1	CA ASSY,SP,ELEC: (SEE A5W511 REPL)		
-20	337-2978-00			1	SHIELD,ELEC:LOW VOLTAGE POWER SUPPLY ATTACHING PARTS	TK1165	80630-000
-21	211-0304-00			2	SCR,ASSEM WSHR:4-40 X 0.312,PNH,STL,T9 END ATTACHING PARTS	0KB01	ORDER BY DESC
-22	334-4759-00			1	MARKER,IDENT:MKD SHIELDS INVERTER	07416	ORDER BY DESC
-23	407-3436-00			1	BRKT,CMPNT MTG:CAP,TOP,ALUMINUM	TK1905	407-3436-00
-24	407-3437-00			1	BRKT,CMPNT MTG:CAP,BOTTOM,PLASTIC	TK1905	407-3437-00
-25	407-2854-00			1	BRACKET,ANGLE:TRANSISTOR,ALUMINUM ATTACHING PARTS	92101	ORDER BY DESC
-26	210-0586-00			5	NUT,PL,ASSEM WA:4-40 X 0.25,STL	TK0435	ORDER BY DESC
-27	129-0304-00			1	SPACER,POST:1.265 L,4-40 EA END,NYLON END ATTACHING PARTS	TK0588	ORDER BY DESC
-28	343-1025-00			3	RETAINER,XSTR:POLYPHENYLENE ATTACHING PARTS	0JR05	ORDER BY DESC
-29	210-0406-00			3	NUT,PLAIN,HEX:4-40 X 0.188,BRS END ATTACHING PARTS	73743	12161-50
-30	342-0582-00			3	INSULATOR,PLATE:TRANSISTOR,CERAMIC	80009	342058200
-30.1	259-0142-00			1	FLEX CIRCUIT: LVPS EMI SHIELD	80009	259014200

Fig. & Index No.	Tektronix Part No.	Serial No. Effective	Dscont	Qty	12345 Name & Description	Mfr. Code	Mfr. Part No.
4-31	195-6852-00			1	LEAD,ELECTRICAL:18 AWG,2.375 L,8-4	0J7N9	ORDER BY DESC
					ATTACHING PARTS		
-32	210-0586-00			1	NUT,PL,ASSEM WA:4-40 X 0.25,STL	TK0435	ORDER BY DESC
					END ATTACHING PARTS		
-33	342-0354-00			1	INSULATOR,PLATE:TRANSISTOR,SILICONE RBR	55285	7403-09FR-52
					ATTACHING PARTS		
-34	210-0586-00			2	NUT,PL,ASSEM WA:4-40 X 0.25,STL	TK0435	ORDER BY DESC
-35	210-1178-00			1	WASHER,SHLDR:U/W TO-220 TRANSISTOR	13103	7721-7PPS
-36	210-1002-00			1	WASHER,FLAT:0.125 ID X 0.25 OD X 0.022,BRS	12327	ORDER BY DESC
					END ATTACHING PARTS		
-37	--------			1	CIRCUIT BD ASSY:INVERTER (SEE A3 REPL)		
					ATTACHING PARTS		
-38	211-0732-00			2	SCR,ASSEM WSHR:6-32 X 0.75,PNH,STL,T15	0KB01	ORDER BY DESC
-39	210-0457-00			2	NUT,PL,ASSEM WA:6-32 X 0.312,STL	TK0435	ORDER BY DESC
-40	211-0711-00			2	SCR,ASSEM WSHR:6-32 X 0.25,PNH,STL,T15	0KB01	ORDER BY DESC
					END ATTACHING PARTS		
-41	343-1099-01			1	RTNR,POWER SPLY:LOW VOLTAGE,FRONT,PC	TK1905	ORDER BY DESC
-42	361-1219-00			6	SPACER,CKT BD:0.362 L X 0.134 OD,PLASTIC	TK1302	ORDER BY DESC
-43	361-1132-01	B010100	B049999	4	SPACER,CKT BD:A POLYCARBONATE	TK1167	ORDER BY DESC
	361-1132-01	B050000		3	SPACER,CKT BD:A POLYCARBONATE	TK1167	ORDER BY DESC
-44	129-0976-00			1	SPACER,POST:0.86 L X 6-32,POLYCARB	TK1167	ORDER BY DESC
					INVERTER CIRCUIT BOARD ASSY INCLUDES:		
-45	131-0589-00			4	.TERMINAL,PIN:PRESSFIT/PCB,;MALE,STR	22526	48283-087
-46	136-0263-07			18	.SOCKET,CONTACT:PCB,;FEMALE,STR	22526	76215-002
-47	--------			2	TERMINAL,PIN: (SEE A3J301,J302 REPL)		
-48	361-1536-00	B050000	B050315	1	.SPACER,CKT BD:0.375 L,NYLON	06915	MSPM-6-01
	361-1536-01	B050316		1	.SPACER,CKT BD:0.375 L,NYLON	06915	MSPM-6-01
-49	195-9720-01			1	LEAD,ELECTRICAL:18 AWG,2.4 L,0-N	0J7N9	ORDER BY DESC
-50	129-0912-01			1	SPACER,POST:0.658 L.6-32 BOTH ENDS,AL	TK1465	ORDER BY DESC
					ATTACHING PARTS		
-51	211-0711-00			1	SCR,ASSEM WSHR:6-32 X 0.25,PNH,STL,T15	0KB01	ORDER BY DESC
					END ATTACHING PARTS		
-52	337-3059-00			1	SHIELD,ELEC:LVPS	07416	58600-000
-53	--------			1	CIRCUIT BD ASSY:REGULATOR (SEE A2 REPL)		
-54	--------			1	CA ASSY,SP,ELEC: (SEE A2W251 REPL)		
-55	--------			AR	TERM,QIK DISC: (SEE A2J204 THRU J207 REPL)		
-56	136-0263-07			18	.SOCKET,CONTACT:PCB,;FEMALE,STR	22526	76215-002
-57	344-0329-00			2	.CLIP,ELECTRICAL:PCB,;FEMALE,STR	S3629	0G 751.0052
-58	--------			5	TERMINAL,PIN: (SEE A2J121,J122,J201,J202,		
					TP201 REPL)		
-59	200-2735-00			1	.COVER,POWER SW:BLACK,POLYCARBONATE	0JR05	ORDER BY DESC
-60	343-1067-01			3	.RTNR,ELEC CONN:POLYCARBONATE,BLACK	TK1905	ORDER BY DESC
	343-1099-01			1	.RTNR,POWER SPLY:LOW VOLTAGE,FRONT,PC	TK1905	ORDER BY DESC
-61	407-2825-00			1	.BRACKET,ANGLE:TRANSISTOR MTG,ALUMINUM	TK1160	ORDER BY DESC
					ATTACHING PARTS		
-62	211-0337-00			3	.SCREW,MACHINE:4-40 X 0.25,PNH,SST	TK0435	ORDER BY DESC

Fig. & Index No.	Tektronix Part No.	Serial No. Effective	Dscont	Qty	12345 Name & Description	Mfr. Code	Mfr. Part No.
4-63	210-0586-00			2	.NUT,PL,ASSEM WA:4-40 X 0.25,STL END ATTACHING PARTS	TK0435	ORDER BY DESC
-64	--------			6	TRANSISTOR:(SEE A2Q1220,Q1240,Q1280, Q1300,U1260,U1330 REPL)		
-65	342-0536-00			6	.INSULATOR,XSTR:TO-220,POLYENELENE	0JR05	ORDER BY DESC
-66	342-0354-00			6	.INSULATOR,PLATE:TRANSISTOR,SILICONE RBR	55285	7403-09FR-52
-67	361-1207-00			6	.SPACER,PLATE:0.550 X 0.812,AL (TRANSISTOR) ATTACHING PARTS	TK1299	1207-11
-68	210-0406-00			5	.NUT,PLAIN,HEX:4-40 X 0.188,BRS	73743	12161-50
-69	210-1307-00			6	.WASHER,LOCK:0.115 ID,SPLIT,0.025 THK,SI BRZ	0KB01	ORDER BY DESC
-70	210-1002-00			6	.WASHER,FLAT:0.125 ID X 0.25 OD X 0.022,BRS	12327	ORDER BY DESC
-71	129-0230-00			1	.SPACER,POST:1.375 L,4-40 EA END,BRS END ATTACHING PARTS	TK0588	129-0230-00
-72	--------			1	CIRCUIT BD ASSY:MAIN (SEE A1 REPL)		
	195-3985-00			2	.LEAD,ELECTRICAL:26 AWG,1.7 L,9-N	TK0753	ORDER BY DESC
-73	--------			1	CA ASSY,SP,ELEC: (SEE A1W122 REPL)		
-74	--------			1	CA ASSY,SP,ELEC: (SEE A1W121 REPL)		
-75	386-4735-01			1	.PLATE,CMPNT MTG:ALUMINUM ATTACHING PARTS	TK1169	ORDER BY DESC
-76	210-0586-00			2	.NUT,PL,ASSEM WA:4-40 X 0.25,STL END ATTACHING PARTS	TK0435	ORDER BY DESC
-77	131-0679-02			2	.CONN,RF RCPT:BNC,;50 OHM,FEMALE,STR ATTACHING PARTS	TK0I0	BNC340-BR-1
-78	213-0006-00			2	.SETSCREW:8-32 X 0.188,STL END ATTACHING PARTS	TK0433	ORDER BY DESC
-79	131-2716-01			1	.TERMINAL,CAL:	TK1163	ORDER BY DESC
-80	--------			9	MICROCKT,LINEAR:(SEE A1U100,U200,U300, U400,U500,U600,U700,U900,U950 REPL) ATTACHING PARTS		
-81	210-0586-00			31	.NUT,PL,ASSEM WA:4-40 X 0.25,STL END ATTACHING PARTS	TK0435	ORDER BY DESC
-82	129-0985-00			1	.SPACER,POST:0.350 L,4-40 THRU,STL	TK1287	ORDER BY DESC
-83	214-2270-00			3	.CONTACT,ELEC:CRT TO SHLD,CU-BE ATTACHING PARTS	5Y400	ORDER BY DESC
-84	211-0324-00			5	.SCR,ASSEM WSHR:4-40 X 0.188,PNH,T9 END ATTACHING PARTS	0KB01	ORDER BY DESC
-85	--------			2	ATTENUATOR,VAR:(SEE A1A11,A1A12 REPL) ATTACHING PARTS		
-86	211-0304-00			4	.SCR,ASSEM WSHR:4-40 X 0.312,PNH,STL,T9 END ATTACHING PARTS	0KB01	ORDER BY DESC
-87	351-0677-01			2	.GUIDE,MAG CATCH:BLACK,PLOYCARBONATE	TK1905	351-0677-01
-88	337-3031-00			2	.SHIELD,ELEC:PRE-AMP ATTACHING PARTS	TK1585	ORDER BY DESC
-89	211-0324-00			5	.SCR,ASSEM WSHR:4-40 X 0.188,PNH,T9 END ATTACHING PARTS	0KB01	ORDER BY DESC
-90	129-0985-00			4	.SPACER,POST:0.350 L,4-40 THRU,STL	TK1287	ORDER BY DESC
-91	210-0003-00			4	.WASHER,LOCK:#4 EXT,0.015 THK,STL	0KB01	ORDER BY DESC

Fig. & Index No.	Tektronix Part No.	Serial No. Effective	Dscont	Qty	12345 Name & Description	Mfr. Code	Mfr. Part No.
4-92	214-0973-00	B010100	B050418	1	.HEAT SINK,XSTR:TO-92,CU BE	80009	214097300
	162-0533-00	B050419		1	.INSUL SLVG,ELEC:HT SHRINK,0.25 ID	06090	VERSAFIT
					ATTACHING PARTS		
-93	210-0586-00			4	.NUT,PL,ASSEM WA:4-40 X 0.25,STL	TK0435	ORDER BY DESC
	210-0994-00			1	.WASHER,FLAT:0.125 ID X 0.25 OD X 0.022,STL	12327	ORDER BY DESC
					END ATTACHING PARTS		
-94	136-0727-00			1	.SOCKET,DIP:PCB,;FEMALE,STR,2 X 4,8 POS	09922	DILB8P-108
-95	136-0728-00			1	.SOCKET,DIP:PCB,;FEMALE,STR,2 X 7,14 POS	09922	DILB14P-108
	136-0729-00			1	.SOCKET,DIP:PCB,;FEMALE,STR,2 X 8,16 POS	09922	DILB16P-108T
-96	136-0757-00			1	.SOCKET,DIP:PCB,;FEMALE,STR,2 X 20,40 POS	09922	DILB40P-108
-97	136-0252-07			32	.SOCKET,PIN TERM:SINGLE,PCB,T/G,0.030 H	22526	75060-012
-98	--------			10	TERMINAL,PIN: (SEE A1J9,J10,J11,J100, J103,J104,J105,J109,J117,J181 REPL)		
-99	131-3957-00			4	.BUS,CONDUCTOR:SHUNT,1 X 2,0.1 CTR	22526	68786-202
	344-0412-00			1	.CLIP,GROUND:C CLIP,BE-CU	TK1326	PER TEK DRAWING
					END ATTACHING PARTS		
-99.1	343-0088-00			1	.CLAMP,CABLE:0.062 DIA,PLASTIC	80009	343008800
-100	366-1767-00			1	PUSH BUTTON:BLACK,YELLOW INDICATOR	31918	160597
-101	407-2904-01			1	BRACKET,EXT SFT:POLYCARBONATE	TK1905	ORDER BY DESC
-102	211-0718-00			1	SCREW,MACHINE:6-32 X 0.312,FLH,STL	0KB01	ORDER BY DESC
-103	384-1685-00			2	EXTENSION SHAFT:SWITCH,1.315 L X 0.188 OD	0JR05	ORDER BY DESC
-104	407-2904-01			1	BRACKET,EXT SFT:POLYCARBONATE	TK1905	ORDER BY DESC
-105	211-0718-00			1	SCREW,MACHINE:6-32 X 0.312,FLH,STL	0KB01	ORDER BY DESC
-106	214-3328-00			1	SPRING,HLCPS:0.37 OD X 0.7 L,CLE,SST	8X345	ORDER BY DESC
-107	384-1631-00			1	EXTENSION SHAFT:12.897 L X 0.375 OD,PLSTC	TK1905	ORDER BY DESC
-108	407-2800-00			1	BRACKET,PIVOT:EXTENTION SHAFT,PLASTIC	TK1905	ORDER BY DESC
					ATTACHING PARTS		
-109	211-0711-00			1	SCR,ASSEM WSHR:6-32 X 0.25,PNH,STL,T15	0KB01	ORDER BY DESC
					END ATTACHING PARTS		
-110	407-2803-00			1	BRACKET,PVT ARM:EXTENSION SHAFT,PLASTIC	TK1905	ORDER BY DESC
-111	--------			2	RES,VAR,NONWW: (SEE R975,R977 REPL)		
					ATTACHING PARTS		
-112	210-0583-00			2	NUT,PLAIN,HEX:0.25-32 X 0.312,BRS	73743	2X-20319-402
-113	210-0046-00			2	WASHER,LOCK:0.261 ID,INTL,0.018 THK,STL	78189	1214-05-00-0541
					END ATTACHING PARTS		
-114	--------			1	SWITCH,PUSH: (SEE A1S615 REPL)		
-115	361-0382-00			2	SPACER,PB SW:0.275 L,BROWN POLYCARB	0JR05	ORDER BY DESC
-116	384-1685-00			1	EXTENSION SHAFT:SWITCH,1.315 L X 0.188 OD	0JR05	ORDER BY DESC
-117	366-2036-00			1	PUSH BUTTON:GY,0.206 SQ,1.445 H	0JR05	ORDER BY DESC
-118	377-0512-01	B010100	B010647	4	INSERT,KNOB:0.172 ID X 0.28 OD X 0.64,NYL	0JR05	ORDER BY DESC
	377-0512-03	B010648		4	INSERT,KNOB:0.128 ID X 0.37 OD X 0.67 L,XL	TK1163	ORDER BY DESC
-119	--------			4	RES,VAR,NONWW: (SEE R134,R351,R352,R976)		
					ATTACHING PARTS		
-119.1	259-0141-00			1	FLEX CIRCUIT: CRT CONTROLS	80009	259014100
-120	210-0583-00			4	NUT,PLAIN,HEX:0.25-32 X 0.312,BRS	73743	2X-20319-402
-121	210-0046-00			4	WASHER,LOCK:0.261 ID,INTL,0.018 THK,STL	78189	1214-05-00-0541
					END ATTACHING PARTS		

Fig. & Index No.	Tektronix Part No.	Serial No. Effective	Dscont	Qty	12345 Name & Description	Mfr. Code	Mfr. Part No.
					STANDARD ACCESSORIES		
5-1	161-0104-06			1	CABLE ASSY,PWR,:3 X 0.75MM SQ,220V,98.0 L (OPTION A1 – EUROPEAN)	S3109	VIIGSOPO-HO5VVF
-2	161-0104-08			1	CABLE ASSY,PWR,:3,18 AWG,98 L,SVT,GREY/BLK (OPTION A4 – NORTH AMERICAN)	70903	ORDER BY DESC
-3	161-0104-07			1	CABLE ASSY,PWR,:3,1.0MM SQ,240 VOLT,2.5 M (OPTION A2 – UNITED KINGDOM)	S3109	ORDER BY DESC
-4	161-0167-00			1	CABLE ASSY,PWR,:3.0 X 0.75,6A,240V,2.5M L (OPTION A5 – SWITZERLAND)	S3109	ORDER BY DESC
-5	161-0104-05			1	CABLE ASSY,PWR,:3,18 AWG,240V,98.0 L (OPTAION A3 – AUSTRALIAN)	S3109	SAA/3-OD3CCFC3X
-6	134-0016-01			1	ADAPTER,CONN:BANANA W/BINDING POST	0J260	ORDER BY DESC
-7	159-0021-00			1	FUSE,CARTRIDGE:3AG,2A,250V,FAST BLOW	71400	AGC-2
-8	--------			1	ACCESSORY ASSY:2,P6137 PROBES W/ACCESS		
-9	016-0537-00			1	POUCH,ACCESSORY:6 IN X 9 IN W/ZIPPER	05006	ZIP-6X9ID
-10	200-3199-01			1	COVER,FRONT:ABS	0JR05	ORDER BY DESC
-11	386-4849-00			1	PLATE,MOUNTING:ACCESSORY POUCH,AL	TK1165	ORDER BY DESC
-12	016-0692-00			1	POUCH,ACCESSORY:2465/2445	0JRZ2	ORDER BY DESC
-13	161-0104-00			1	CABLE ASSY,PWR,:3,18 AWG,98 L,SVT,GREY/BLK	0B445	MC6 -3 CG86
-14	343-0007-00			1	CLAMP,LOOP:0.625 ID,PLASTIC	06915	N10B
-15	210-0863-00			1	WSHR,LOOP CLAMP:0.091 ID U/W 0.5 W CLP,STL	85480	C191
-16	211-0722-00			1	SCREW,MACHINE:6-32 X 0.25,PNH,STL	0KB01	ORDER BY DESC
	062-8934-00			1	SHEET,TECHNICAL:MCP/CRT NOTICE	80009	062893400
	070-6861-00	B010100	B050624	1	MANUAL,TECH:OPERATORS,2467BOPTIONS	80009	070686100
	070-6861-01	B050625		1	MANUAL,TECH:OPERATORS,2467B OPTIONS	80009	070686101
					OPTIONAL ACCESSORIES		
	016-0720-00			1	COVER,PROT:NYLON	0JRZ2	ORDER BY DESC
	016-0825-01			1	RACK MOUNT KIT:2430/2445A/2465A/2467	80009	016082501
	070-5859-01			1	SHEET,TECHNICAL:INSTR,2400 SERIES	80009	070585901
	070-6282-00			1	MANUAL,TECH:INTFC GUIDE,2445/2467 OPT 10	80009	070628200
	070-6863-00			1	MANUAL,TECH:SERVICE,2465B/2467B	80009	070686300
	346-0199-00			1	STRAP,CARRYING:MKD TEKTRONIX	TK1623	ORDER BY DESC

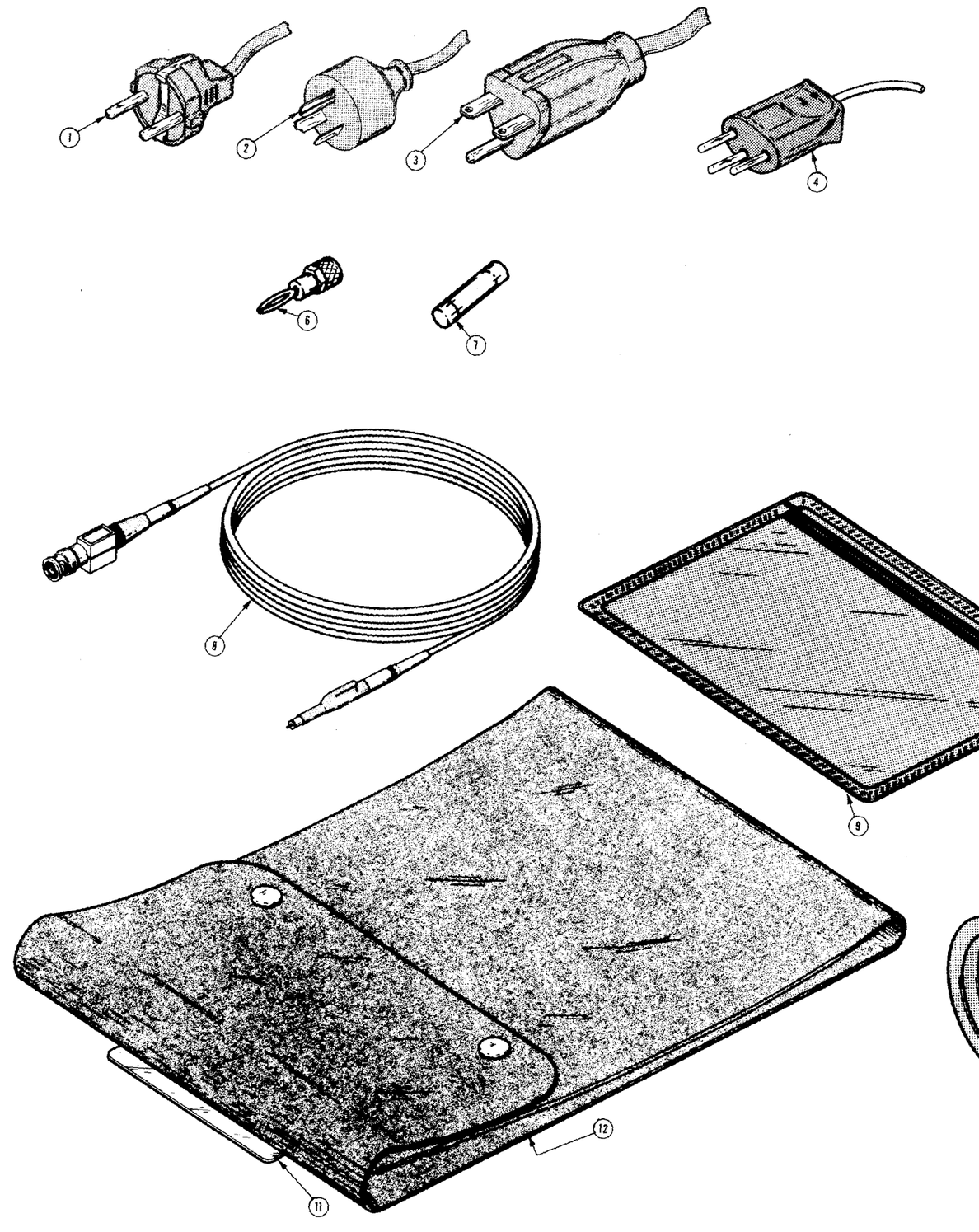
1
2
3
4
6
7
8
9
11
12

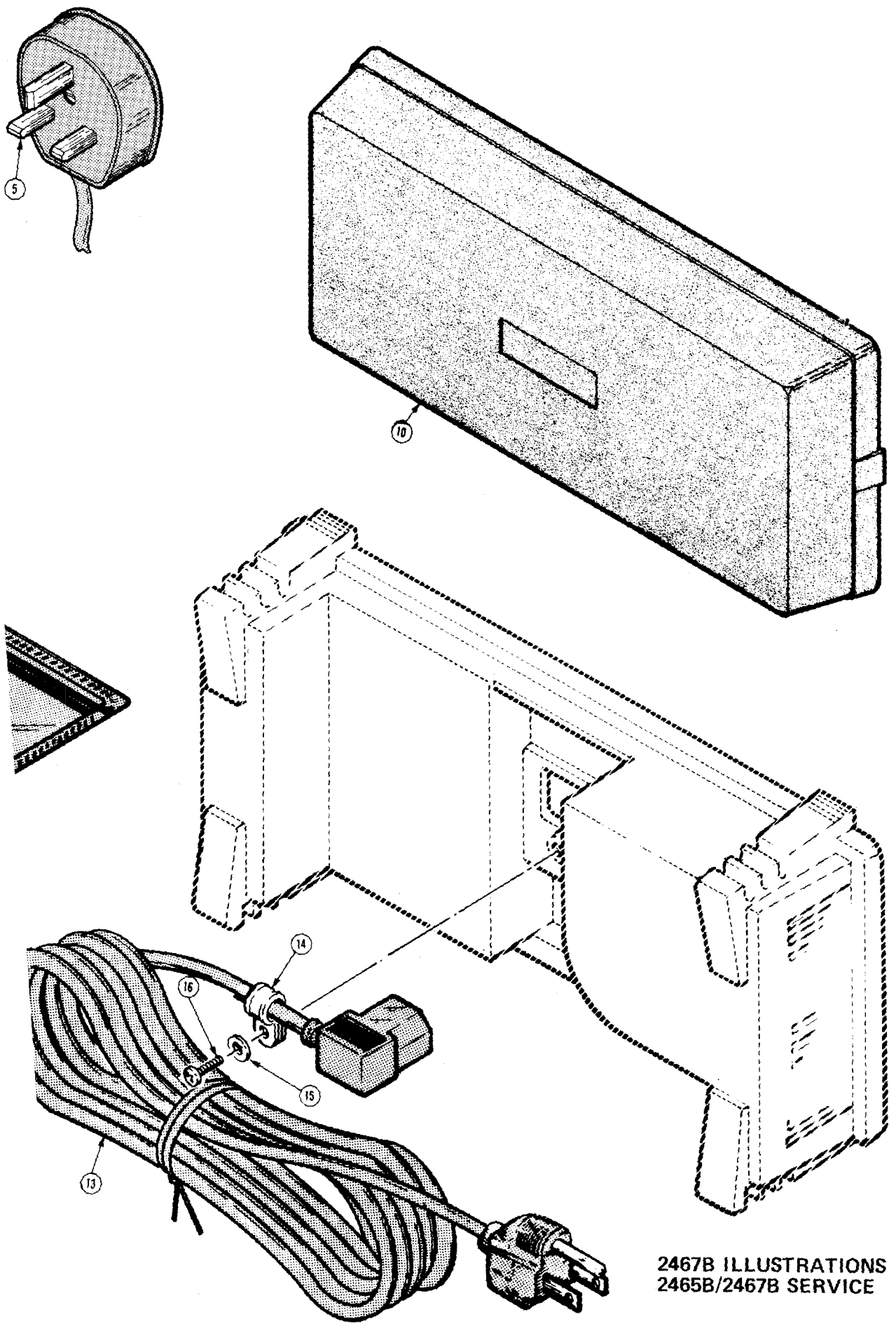

FIG. 5 ACCESSORIES

Tektronix®

REVISION INFORMATION

Manual Part No. 070-6863-00 **First Printing** May 1988

Product: 2465B & 2467B Service Manual **Revised** January 1993

Manual Insert Status

DATE	CHANGE REFERENCE	STATUS
30 January 93	C1/0193	Effective
30 January 93	M70565 Rev 1	Effective
30 January 93	M70831 Rev 1	Effective
30 January 93	M71192 Rev 1	Effective
30 January 93	M72666 Rev 1	Effective
21 June 93	M76759	Effective

Tektronix®
COMMITTED TO EXCELLENCE

MANUAL CHANGE INFORMATION

Date: 30 JAN 93 Change Reference: C1/0193

Product: 2465B/2467B Service Manual Part No.: 070-6863-00

DESCRIPTION

Product Group 38

M69618

EFFECTIVE SERIAL NUMBERS: 2465B B015824 and above
EFFECTIVE SERIAL NUMBERS: 2467B B010809 and above

BOARD CHANGES

A1 MAIN BOARD

Remove wire W500 (location 1K), transistor Q740 (location 7L), and resistor R975 (location 7L).

DIAGRAM CHANGES

Diagram 5 (2465B & 2467B) DISPLAY SEQUENCER TRIGGERING, A&B SWEEP

Change the value of resistor R946 (location 5N) to 220 Ω.

Remove transistor Q740 (location 5N) and resistor R975 (location 7N).

Diagram 6 (2465B & 2467B) CHANNEL SWITCH & OUTPUT AMPLIFIERS

Remove wire W500 (location 9B).

M70856

EFFECTIVE SERIAL NUMBERS: 2465B B051240 and above
EFFECTIVE SERIAL NUMBERS: 2467B B010896 and above

DIAGRAM CHANGES

Diagram 10 LOW-VOLTAGE REGULATORS

Change the value of resistor R1400 (location 5C) to 56 Ω.

M73853

EFFECTIVE SERIAL NUMBERS: 2465B B055938 and above
EFFECTIVE SERIAL NUMBERS: 2467B B051041 and above

DIAGRAM CHANGES

Diagram 1 PROCESSOR AND DIGITAL CONTROL (SN B050000 & Above)

Change the value of resistor R2244 (location 3D) to 1.0 KΩ.

M72996

EFFECTIVE SERIAL NUMBERS: 2465B B056317 and above
EFFECTIVE SERIAL NUMBERS: 2467B B051125 and above

BOARD CHANGES

A2A1—REGULATOR BD

Remove connector J203 (location 1E).

DIAGRAM CHANGES

Diagram 10 LOW–VOLTAGE REGULATORS

Remove connector J203 (location 6N).

M70918

EFFECTIVE SERIAL NUMBERS: 2465B B050727 and above
EFFECTIVE SERIAL NUMBERS: 2467B B050321 and above

BOARD CHANGES

A5 CONTROL/READOUT/BUFFER BOARD (SN B050000 & Above)

Pin 1 of U2210 is now connected to Pin 20, +5 VD, of U2310 via a wire strap.

DIAGRAM CHANGES

Diagram 2 ANALOG CONTROL (SN B050000 & Above)

Pin 1 of U2210 is now connected to +5 VD.

Tektronix®
COMMITTED TO EXCELLENCE

MANUAL CHANGE INFORMATION

Date: 30 JAN 93 **Change Reference:** M70565 REV1

Product: 2465B/2467B Service **Manual Part No.:** 070–6863–00

DESCRIPTION

Product Group 38

EFFECTIVE SERIAL NUMBERS: 2465B B015824 and above
EFFECTIVE SERIAL NUMBERS: 2467B B010809 and above

BOARD CHANGES

A5 CONTROL/READOUT/BUFFER Board

Replace the A5 Control/Readout/Buffer board (SN B050000 and Above) shown in the manual with the new A5 board attached. The above changes will be shown on this new board.

DIAGRAM CHANGES

Diagram 1 PROCESSOR AND DIGITAL CONTROL

Remove resistors R2213 (location 2M), R2214 (location 2M), R2215 (location 2M), and R2461 (location 8J).

Diagram 2 ANALOG CONTROL

Add a 0.01 µF capacitor, C2532, from the output of U2630C (location 4M), pin 8, to ground.

Change the value of resistor R2532 (location 4M) and R2523 (location 7M) to 10K Ω.

Change the value of resistor R2741 (location 4M) to 475 Ω.

Change the value of resistors R2522 (location 7M) and R2640 (location 4L) to 1.5K Ω.

Remove R2211 (location 2F), R2210 (location 2F), R2212 (location 2F), R2646 (location 8J), R2647 (location 8J), and R2648 (location 8J).

DIAGRAM CHANGES (cont)

Diagram 7 READOUT

Remove resistors R2865 (location 4D) and R2830 (location 7B).

Add two 475 Ω resistors R2742 and R2714, and two 0.1 µF capacitors C2801 and C2802 (location 2M) as shown below.

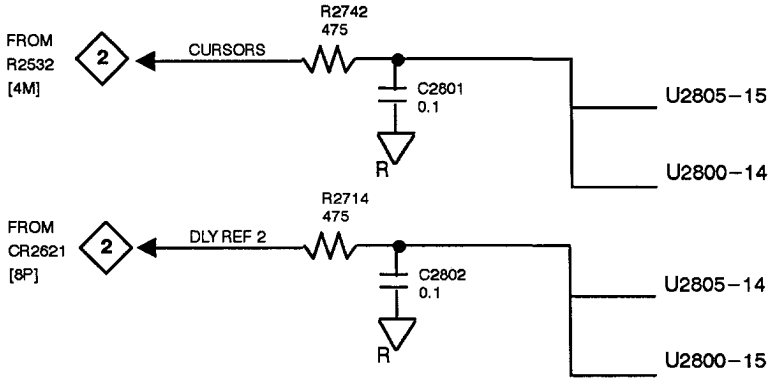

Diagram 12 (2465B & 2467B) POWER DISTRIBUTION

Add two 0.1 µF capacitors C2361 and C2611 to the +5VD line of J251 pin 14.

Add a 0.1 µF capacitor C2441 to the +5V line of J251 pin 8.

Add a 0.1 µF capacitor C2800 to the −5V line of J251 pin 4 as shown below.

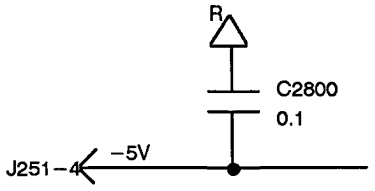

Change the value of capacitor C2965 (location 2B) to 33 µF.

Change the value of capacitor C2331 (location 4B) to 10 µF.

Change the value of capacitor C2011 (location 5B) to 33 µF.

Change the value of capacitor C2113 (location 8B) to 10 µF.

Remove capacitors C2860 and C2870 (location 2C).

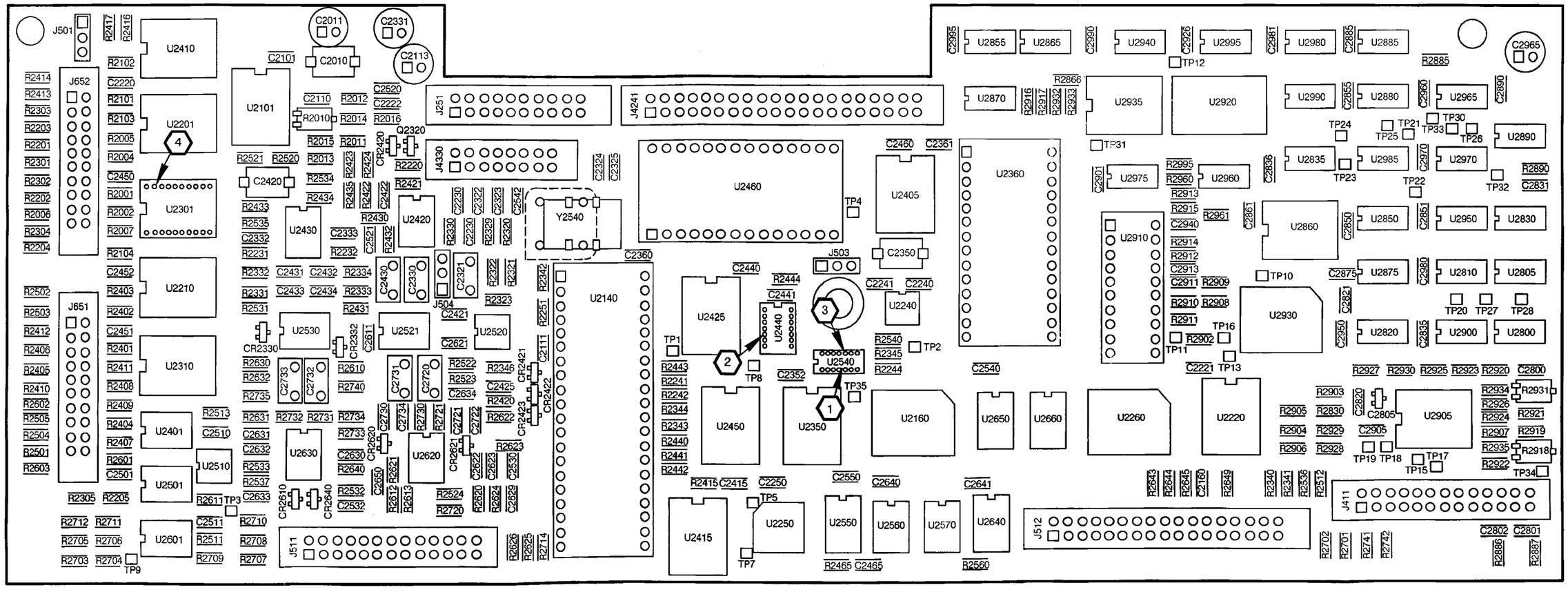
J501
J652
J651
U2410
U2201
U2101
U2301
U2210
U2310
U2401
U2501
U2601
U2430
U2420
U2530
U2521
U2520
U2630
U2620
U2460
U2405
U2360
U2140
U2425
U2440
U2540
U2450
U2350
U2240
U2160
U2650
U2660
U2260
U2220
U2910
U2930
U2855
U2865
U2940
U2995
U2980
U2885
U2870
U2935
U2920
U2990
U2880
U2965
U2890
U2835
U2985
U2970
U2975
U2960
U2860
U2850
U2950
U2830
U2875
U2810
U2805
U2820
U2900
U2800
U2905
U2415
U2250
U2550
U2560
U2570
U2640
J503
J504
J251
J4241
J4330
J411
J511
J512
Y2540
Q2320
CR2420
CR2330
CR2332
CR2421
CR2422
CR2423
CR2610
CR2640
CR2620
CR2621
TP1
TP2
TP3
TP4
TP5
TP7
TP8
TP9
TP10
TP11
TP12
TP13
TP15
TP16
TP17
TP18
TP19
TP20
TP21
TP22
TP23
TP24
TP25
TP26
TP27
TP28
TP30
TP31
TP32
TP33
TP34
TP35

Tektronix®
COMMITTED TO EXCELLENCE

MANUAL CHANGE INFORMATION

Date: 30 JAN 93 **Change Reference:** M70831 REV1

Product: 2465B/2467B Service **Manual Part No.:** 070–6863–00

DESCRIPTION **Product Group 38**

EFFECTIVE SERIAL NUMBERS: 2467B B050348 and above

BOARD CHANGES

A15 HOLDOFF BOARD

Replace the A15 Holdoff board shown in the manual with the new A15 board shown below.

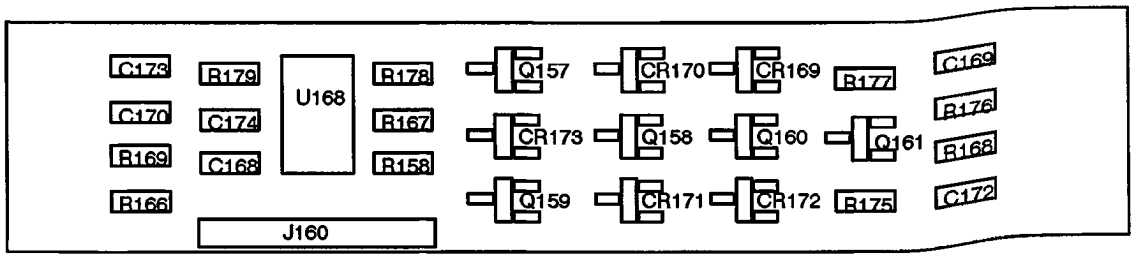

DIAGRAM CHANGES

Diagram 5 2467B DISPLAY SEQUENCER TRIGGERING, A&B SWEEP

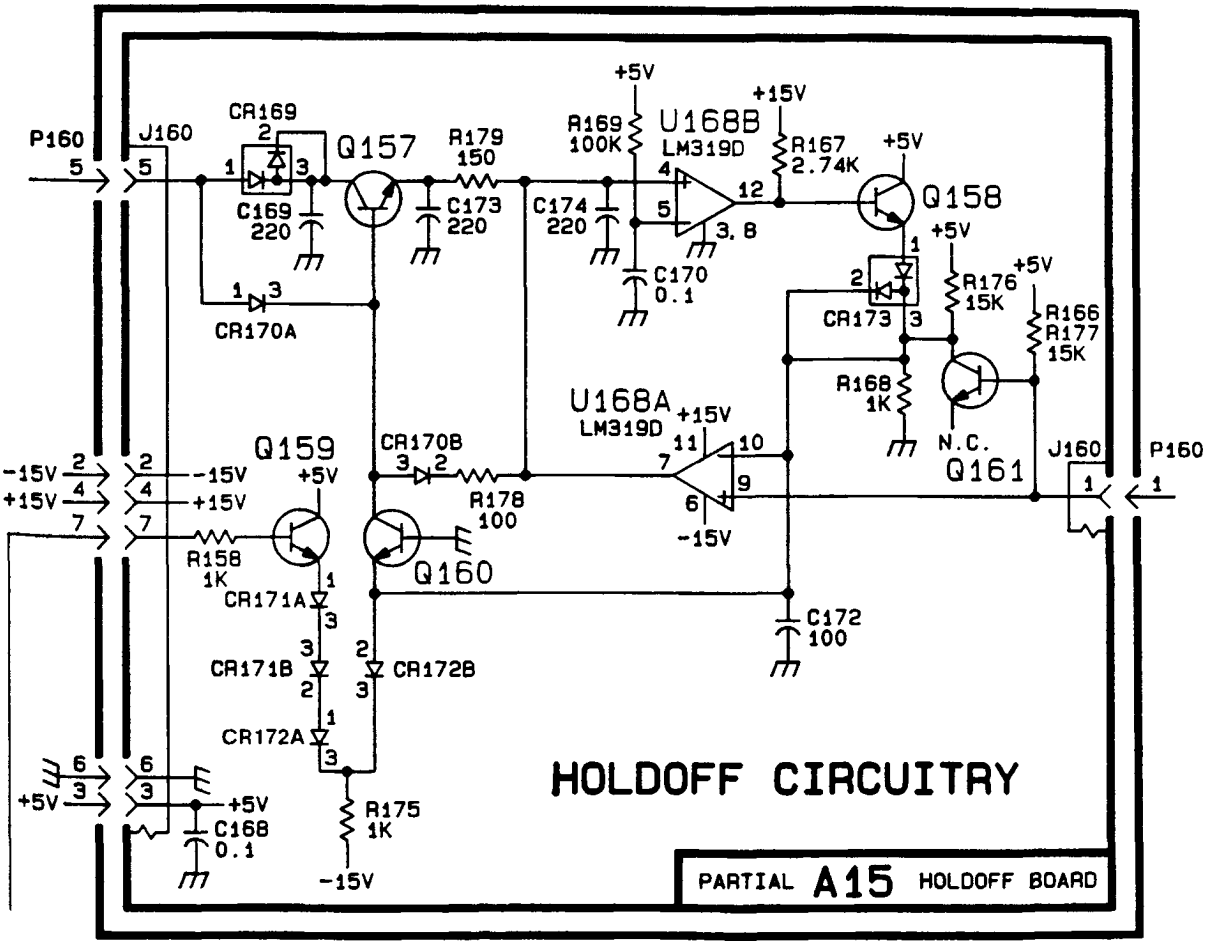

Tektronix®
COMMITTED TO EXCELLENCE

MANUAL CHANGE INFORMATION

Date: 30 JAN 93 **Change Reference:** M71192 REV1

Product: 2465B/2467B Service **Manual Part No.:** 070–6863–00

DESCRIPTION **Product Group 38**

EFFECTIVE SERIAL NUMBERS: 2465B B051079 and above
EFFECTIVE SERIAL NUMBERS: 2467B B010885 and above
EFFECTIVE SERIAL NUMBERS: 2467B B050364 and above

BOARD CHANGES

A1 MAIN BOARD

Add capacitor C678, teepeed from R678 (location 2J) to C521 as shown below.

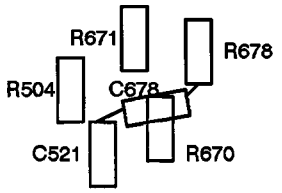

DIAGRAM CHANGES

Diagram 5 (2465B & 2467B) DISPLAY SEQUENCER TRIGGERING, A&B SWEEP

Add C678 as shown below at location 5C.

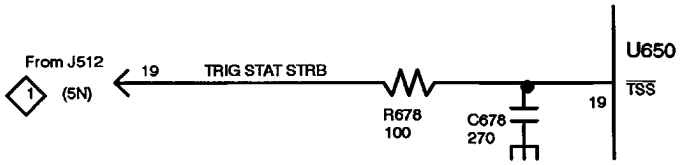

Tektronix®
COMMITTED TO EXCELLENCE

MANUAL CHANGE INFORMATION

Date: 30 JAN 93 **Change Reference:** M72666 REV1

Product: 2465B/2467B Service **Manual Part No.:** 070–6863–00

DESCRIPTION

Product Group 38

EFFECTIVE SERIAL NUMBERS: 2465B B053089 and above
EFFECTIVE SERIAL NUMBERS: 2467B B050557 and above

BOARD CHANGES

A1 MAIN BOARD

Add capacitor C511, teepeed across R511 (location 3J).

DIAGRAM CHANGES

Diagram 5 (2465B & 2467B) DISPLAY SEQUENCER TRIGGERING, A&B SWEEP

Add C511 across R511 as shown below (location 4H).

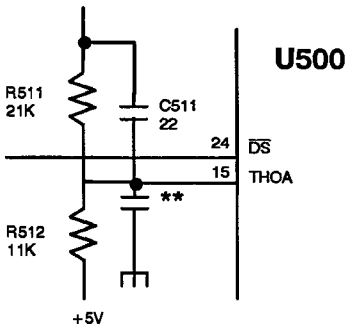

Tektronix®
COMMITTED TO EXCELLENCE

MANUAL CHANGE INFORMATION

Date: 21-JUNE-93 **Change Reference:** M76759

Product: 2465B/2467B Service **Manual Part No.:** 070-6863-00

DESCRIPTION **Product Group 38**

EFFECTIVE FOR SERIAL NUMBERS: 2465B, B060728; 2467B, B052366

REPLACEABLE ELECTRICAL PARTS LIST CHANGES

REMOVE:

A1	671-0722-10	CIRCUIT BD ASSY:MAIN (2465B)
A1	671-0722-11	CIRCUIT BD ASSY:MAIN (2467B)
A1	671-0722-09	CIRCUIT BD ASSY:MAIN (2467B Option 05)
A1R520	313-1393-00	RES,FXD,FILM:39K OHM,5%,0.2W
A1R544	313-1393-00	RES,FXD,FILM:39K OHM,5%,0.2W
A1R557	321-0808-07	RES,FXD,FILM:300 OHM,0.1%,0.125W
A1R558	321-0657-07	RES,FXD,FILM:60 OHM,0.1%,0.125W
A2	672-1037-16	CIRCUIT BD ASSY:LV PWR SPLY MODULE
A2A1	670-7281-07	CIRCUIT BD ASSY:REGULATOR
A2A1R1010	301-0150-00	RES,FXD,FILM:15 OHM,5%,0.5W
A2A1R1019	301-0150-00	RES,FXD,FILM:15 OHM,5%,0.5W
A2A1R1212	313-1393-00	RES,FXD,FILM:39K OHM,5%,0.2W
A2A1R1243	313-1393-00	RES,FXD,FILM:39K OHM,5%,0.2W
A2A1RT1010	307-0350-00	RES,THERMAL:7.5 OHM,10%,3.9%/DEG C
A2A1RT1016	307-0746-00	RES,THERMAL:5 OHM,10%,3.9%/DEG C
A5	671-0965-05	CIRCUIT BD ASSY:CONTROL/READOUT/BUFFER
A5R2201	321-5030-00	RES,FXD,FILM:10.0K OHM,1%,0.125W
A5R2202	321-5030-00	RES,FXD,FILM:10.0K OHM,1%,0.125W
A5R2203	321-5030-00	RES,FXD,FILM:10.0K OHM,1%,0.125W
A5R2204	321-5030-00	RES,FXD,FILM:10.0K OHM,1%,0.125W
A5R2413	321-5030-00	RES,FXD,FILM:10.0K OHM,1%,0.125W
A9	670-7277-11	CIRCUIT BD ASSY:HIGH VOLTAGE (2465B)
A9C1870	281-0773-00	CAP,FXD,CER DI:0.01UF,10%,100V
A9R1953	313-1393-00	RES,FXD,FILM:39K OHM,5%,0.2W

ADD:

A1	671-0722-13	CIRCUIT BD ASSY:MAIN (2465B)
A1	671-0722-14	CIRCUIT BD ASSY:MAIN (2467B)
A1	671-0722-12	CIRCUIT BD ASSY:MAIN (2467B Option 05)
A1R520	315-0393-00	RES,FXD,FILM:39K OHM,5%,0.25W
A1R544	315-0393-00	RES,FXD,FILM:39K OHM,5%,0.25W
A1R557	308-0974-00	RES,FXD,WW:300 OHM,0.25%,0.25W
A1R558	308-0973-00	RES,FXD,WW:60 OHM,0.25%,0.25W
A2	672-1037-17	CIRCUIT BD ASSY:LV PWR SPLY MODULE
A2A1	670-7281-08	CIRCUIT BD ASSY:REGULATOR
A2A1R1212	315-0393-00	RES,FXD,FILM:39K OHM,5%,0.25W
A2A1R1243	315-0393-00	RES,FXD,FILM:39K OHM,5%,0.25W
A2A1RT1010	307-0157-00	RES,THERMAL:5 OHM,10%,DISC
A2A1RT1016	307-0157-00	RES,THERMAL:5 OHM,10%,DISC
A5	671-0965-06	CIRCUIT BD ASSY:CONTROL/READOUT/BUFFER
A5R2201	321-5023-00	RES,FXD,FILM:2.74K OHM,1%,0.125W
A5R2202	321-5023-00	RES,FXD,FILM:2.74K OHM,1%,0.125W
A5R2203	321-5023-00	RES,FXD,FILM:2.74K OHM,1%,0.125W
A5R2204	321-5023-00	RES,FXD,FILM:2.74K OHM,1%,0.125W
A5R2413	321-5023-00	RES,FXD,FILM:2.74K OHM,1%,0.125W
A9	670-7277-12	CIRCUIT BD ASSY:HIGH VOLTAGE (2465B)
A9C1850	281-0775-01	CAP,FXD,CER DI:0.1UF,20%,50V
A9C1851	281-0775-01	CAP,FXD,CER DI:0.1UF,20%,50V
A9C1870	285-1356-00	CAP,FXD,PLASTIC:0.047UF,20%,250V
A9C1892	281-0775-01	CAP,FXD,CER DI:0.1UF,20%,50V
A9R1850	315-0100-02	RES,FXD,CMPSN:10 OHM,5%,0.25W
A9R1869	315-0101-03	RES,FXD,CMPSN:100 OHM,5%,0.25W
A9R1953	315-0393-00	RES,FXD,FILM:39K OHM,5%,0.2W
A9R1993	315-0103-00	RES,FXD,FILM:10K OHM,5%,0.25W

CHANGE:

A9C1915	285-1356-00	CAP,FXD,PLASTIC:0.047UF,20%,250V

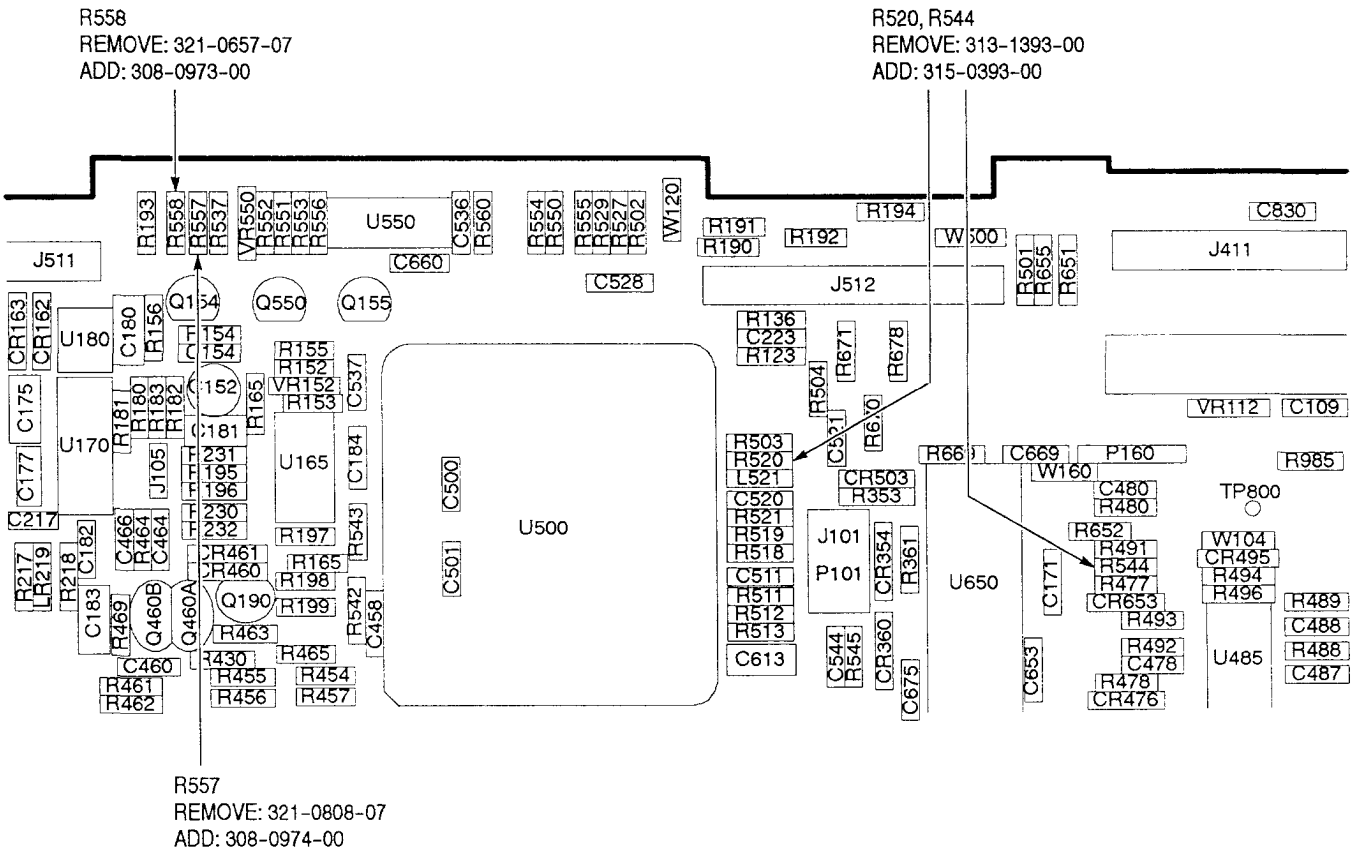

Partial A1 Main Board

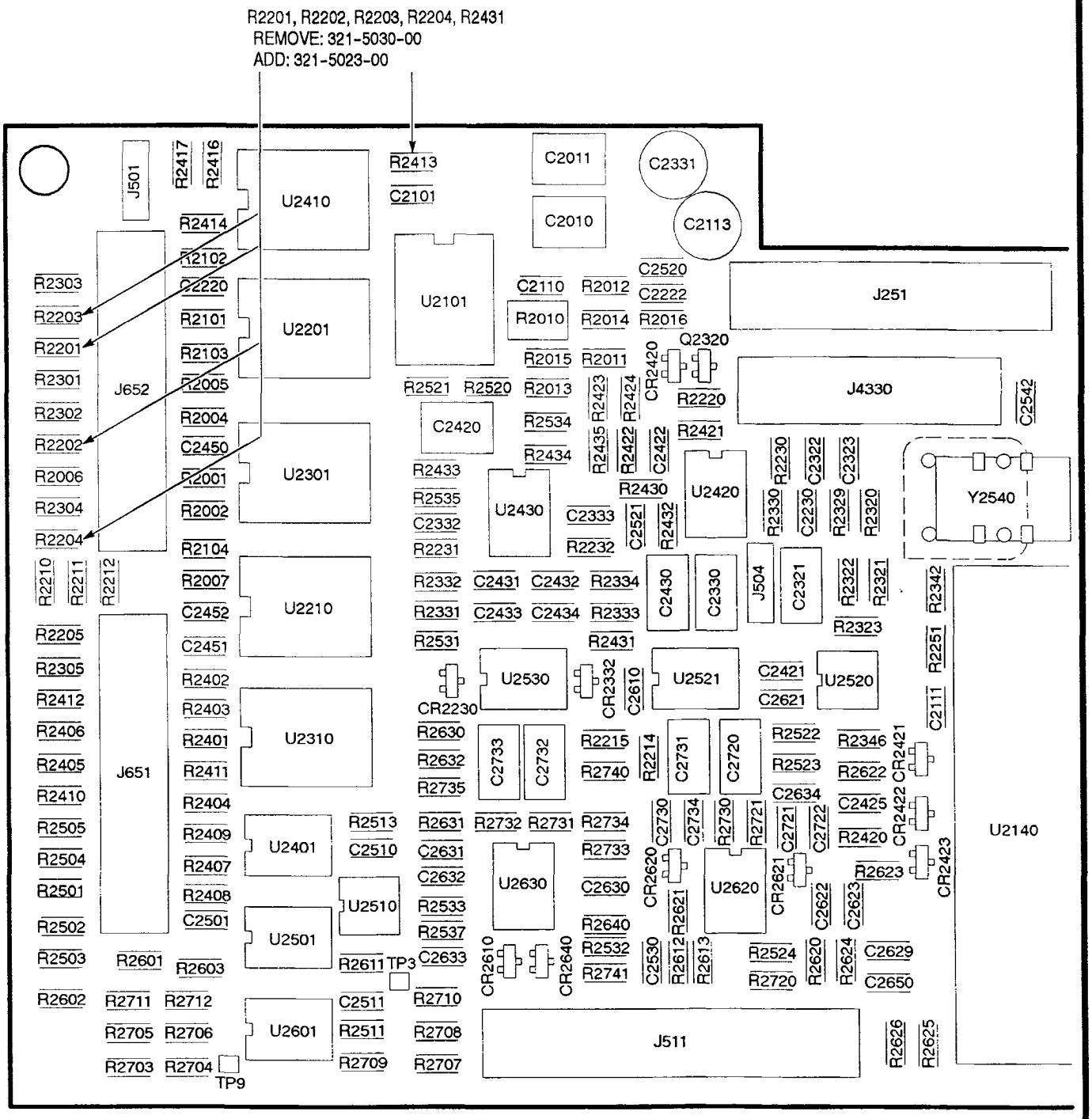

Partial A5 Control/Readout/Buffer Board

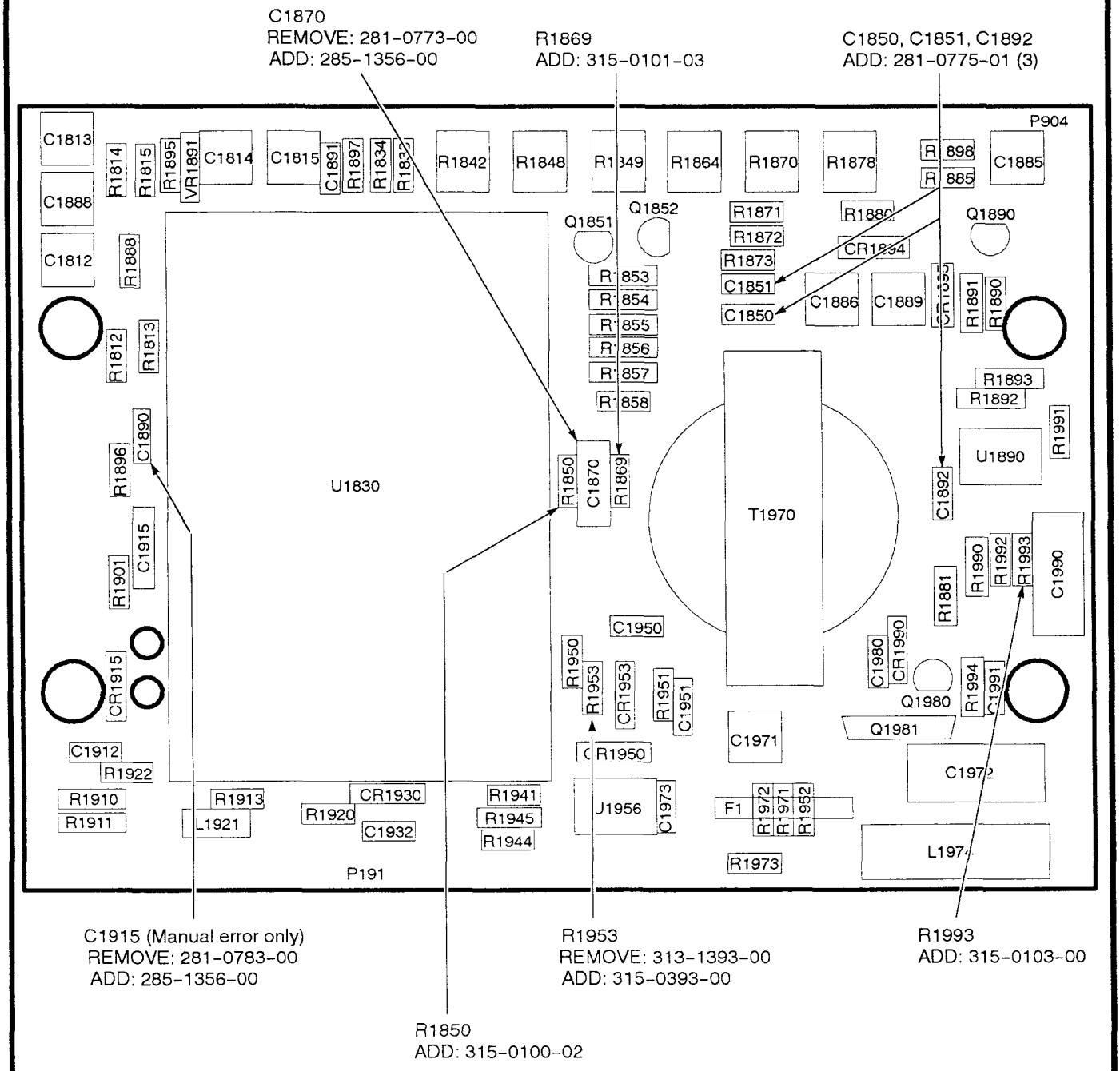

A9 High Voltage Board

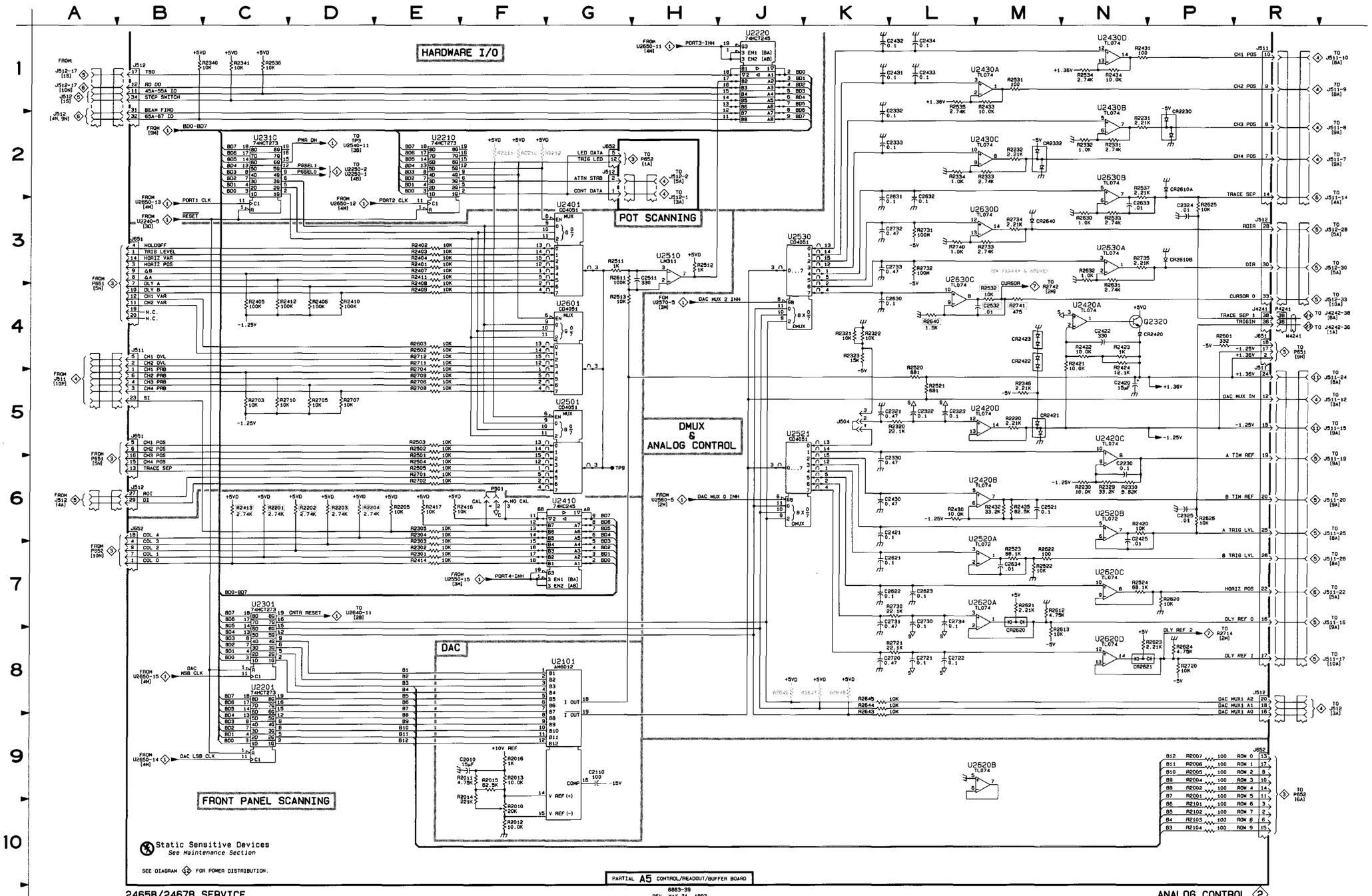
HARDWARE I/O
POT SCANNING
DMUX & ANALOG CONTROL
DAC
FRONT PANEL SCANNING
Static Sensitive Devices
See Maintenance Section
SEE DIAGRAM 2 FOR POWER DISTRIBUTION.
PARTIAL A5 CONTROL/READOUT/BUFFER BOARD
6863-39
REV. MAY 21, 1992

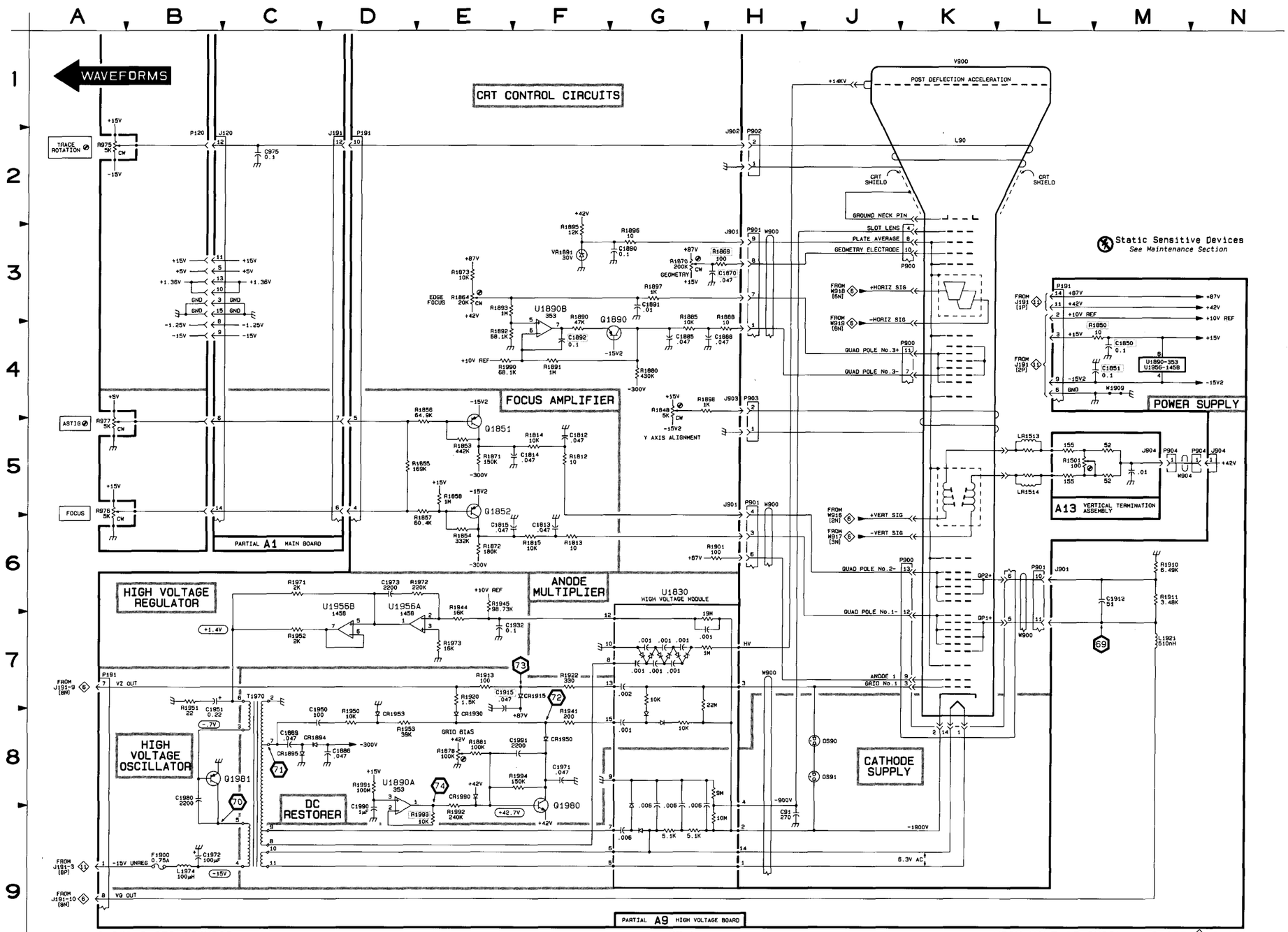
WAVEFORMS
CRT CONTROL CIRCUITS
FOCUS AMPLIFIER
POWER SUPPLY
HIGH VOLTAGE REGULATOR
ANODE MULTIPLIER
HIGH VOLTAGE OSCILLATOR
DC RESTORER
CATHODE SUPPLY
PARTIAL A1 MAIN BOARD
PARTIAL A9 HIGH VOLTAGE BOARD
A13 VERTICAL TERMINATION ASSEMBLY
Static Sensitive Devices
See Maintenance Section
POST DEFLECTION ACCELERATION
TRACE ROTATION
ASTIG
FOCUS
EDGE FOCUS
GEOMETRY
Y AXIS ALIGNMENT
GROUND NECK PIN
SLOT LENS
PLATE AVERAGE
GEOMETRY ELECTRODE
QUAD POLE No.3+
QUAD POLE No.3-
QUAD POLE No.2-
QUAD POLE No.1-
ANODE 1
GRID No.1
+HORIZ SIG
-HORIZ SIG
+VERT SIG
-VERT SIG
VZ OUT
VG OUT
-15V UNREG
GRID BIAS
HIGH VOLTAGE MODULE
6863-10
REV. MAY 21, 1992