Tektronix®

COMMITTED TO EXCELLENCE

1% each 2% maybe
TDR (500 ps, 3-5Ω)

MULTIPURPOSE TEST STATION

M.P.T.S.

GPIB programmable

ATTENUATOR

067-1095-99

Tektronix, Inc.
P.O. Box 500
Beaverton, Oregon 97077

Serial Number 7

Ø82-6499-ØØ PORTABLE MPTS TEST ENG. FIRST PRINTED 3-Oct-84

Copyright © 1983 Tektronix, Inc. All rights reserved. Contents of this publication may not be reproduced in any form without the written permission of Tektronix, Inc.

Products of Tektronix, Inc. and its subsidiaries are covered by U.S. and foreign patents and/or pending patents.

TEKTRONIX, TEK, SCOPE-MOBILE, and are registered trademarks of Tektronix, Inc. TELEQUIPMENT is a registered trademark of Tektronix U.K. Limited.

Printed in U.S.A. Specification and price change privileges are reserved.

TABLE OF CONTENTS

		Page
	Title page	
	Table of Contents	1
	List of Illustrations	3
	List of Tables	4
	Operators Safety Summary	5
	Service Safety Summary	6
	Static Sensitive Components	7
	Frontispiece: programmable Attenuator	8
SECTION 1	SPECIFICATION	1-1
	Instrument Description	1-1
	IEEE 488 (GPIB) Function Capability	1-1
	Electrical Characteristics	1-2
	Physical Characteristics	1-4
SECTION 2	OPERATOR/PROGRAMMER INSTRUCTIONS	2-1
	Installation and Removal	2-1
	Front Panel Indicators and Connectors	2-1
	Functional Check	2-2
	Programming Information	2-3

SECTION 3 THEORY OF OPERATION ——— 3-1

Block Diagram Description ——— 3-1

GPIB Interface ——— 3-1

Digital-Controlled Solenoid Drivers ——— 3-2

Attenuator Assembly ——— 3-3

Front Panel Display ——— 3-4

Power Supply ——— 3-4

GPIB System Concepts ——— 3-5

SECTION 4 CALIBRATION ——— 4-1

SECTION 5 PARTS LISTS ——— 5-1

Parts Ordering Information ——— 5-1

Component Number System ——— 5-1

Main Board Parts List ——— 5-3

GPIB Board Parts List ——— 5-6

LED Board Parts list ——— 5-7

SECTION 6 DIAGRAMS ——— 6-1

Block Diagram ——— 6-2

Main Board and LED Board Schematic ——— 6-3

GPIB Board Schematic ——— 6-4

SECTION 7 INDEX

LIST OF ILLUSTRATIONS

Fig. No		Page
	Frontispiece: Programmable Attenuator	8
3-5	A Typical System Using GPIB	3-7
3-6	ASCII & IEEE 488 (GPIB) Code Chart	3-8
3-6	Traffic on GPIB	3-10
3-8	Handshake Timing Sequence	3-10
3-9	Handshake Flow Chart	3-11
6-1	Block Diagram	6-2
6-2	Main Board and LED Board Schematic	6-3
6-3	GPIB Board Schematic	6-4

LIST OF TABLES

Table No.		Page
1-1	Electrical Characteristics	1-1
1-2	Physical Characteristics	1-4
2-1	Low-Level Programming	2-4
3-9	Major GPIB Interface Functions	3-6
3-1	Main ECB Connector Pins	3-13
3-2	GPIB Connector Pins	3-14

OPERATORS SAFETY SUMMARY

The general safety information in this part of the summary is for both operating and servicing personnel. Specific warnings and cautions will be found throughout the manual where they apply, but may not appear in this summary.

TERMS

In This Manual

CAUTION statements identify conditions or practices that could result in damage to the equipment or other property.

WARNING statements identify conditions or practices that could result in personal injury or loss of life.

As Marked on Equipment

CAUTION indicates a personal injury hazard not immediately accessible as one reads the marking, or a hazard to property including the equipment itself.

DANGER indicates a personal injury hazard immediately accessible as one reads the marking.

SYMBOLS

In This Manual

⚠ This symbol indicates where applicable cautionary or other information is to be found.

As Marked on Equipment

⚡ DANGER — High voltage.

⏚ Protective ground (earth) terminal.

⚠ ATTENTION — refer to manual.

Power Source

This product is intended to operate in a power module connected to a power source that will not apply more than 250 volts rms between the supply conductors or between either supply conductor and ground. A protective ground connection by way of the grounding conductor in the power module power cord is essential for safe operation.

Grounding the Product

This product is grounded through the grounding conductor of the power module power cord. To avoid electrical shock, plug the power cord into a properly wired receptacle before connecting to the product input or output terminals. A protective ground connection by way of the grounding conductor in the power module power cord is essential for safe operation.

Danger Arising From Loss of Ground

Upon loss of the protective-ground connection, all accessible conductive parts (including knobs and controls that may appear to be insulating) can render an electric shock.

Use the Proper Fuse

To avoid fire hazard, use only the fuse of correct type, voltage rating and current rating as specified in the parts list for your product.

Refer fuse replacement to qualified service personnel.

Do Not Operate in Explosive Atmospheres

To avoid explosion, do not operate this product in an explosive atmosphere unless it has been specifically certified for such operation.

Do Not Operate Without Covers

To avoid personal injury, do not operate this product without covers or panels installed. Do not apply power to the plug-in via a plug-in extender.

SERVICE SAFETY SUMMARY

FOR QUALIFIED SERVICE PERSONNEL ONLY

Refer also to the preceding Operators Safety Summary.

Do Not Service Alone

Do not perform internal service or adjustment of this product unless another person capable of rendering first aid and resuscitation is present.

Use Care When Servicing With Power On

Dangerous voltages exist at several points in this product. To avoid personal injury, do not touch exposed connections and components while power is on.

Disconnect power before removing protective panels, soldering, or replacing components.

Power Source

This product is intended to operate in a power module connected to a power source that will not apply more than 250 volts rms between the supply conductors or between either supply conductor and ground. A protective ground connection by way of the grounding conductor in the power module power cord is essential for safe operation.

STATIC-SENSITIVE COMPONENTS

The following precautions are applicable when performing any maintenance involving internal access to the instrument.

CAUTION

Static discharge can damage any semiconductor component in this instrument.

This instrument contains electrical components that are susceptible to damage from static discharge. Table 6-1 lists the relative susceptibility of various classes of semiconductors. Static voltages of 1 kV to 30 kV are common in unprotected environments.

When performing maintenance, observe the following precautions to avoid component damage:

1. Minimize handling of static-sensitive components.

2. Transport and store static-sensitive components or assemblies in their original containers or on a metal rail. Label any package that contains static-sensitive components or assemblies.

3. Discharge the static voltage from your body by wearing a grounded antistatic wrist strap while handling these components. Servicing static-sensitive components or assemblies should be performed only at a static-free work station by qualified service personnel.

4. Nothing capable of generating or holding a static charge should be allowed on the work station surface.

5. Keep the component leads shorted together whenever possible.

6. Pick up components by their bodies, never by their leads.

Table 6-1
Susceptibility
to Static Discharge Damage

Semiconductor Classes	Relative Susceptibility Levels[a]
MOS or CMOS microcircuits or discretes, or linear microcircuits with MOS inputs. (Most Sensitive)	1
ECL	2
Schottky signal diodes	3
Schottky TTL	4
High-frequency bipolar transistors	5
JFETs	6
Linear microcircuits	7
Low-power Schottky TTL	8
TTL (Least Sensitive)	9

[a]Voltage equivalent for levels: (Voltage discharged from a 100 pF capacitor through a resistance of 100 Ω.)

1 = 100 to 500 V	4 = 500 V	7 = 400 to 1000 V(est.)
2 = 200 to 500 V	5 = 400 to 600 V	8 = 900 V
3 = 250 V	6 = 600 to 800 V	9 = 1200 V

7. Do not slide the components over any surface.

8. Avoid handling components in areas that have a floor or work-surface covering capable of generating a static charge.

9. Use a soldering iron that is connected to earth ground.

10. Use only approved antistatic, vacuum-type desoldering tools for component removal.

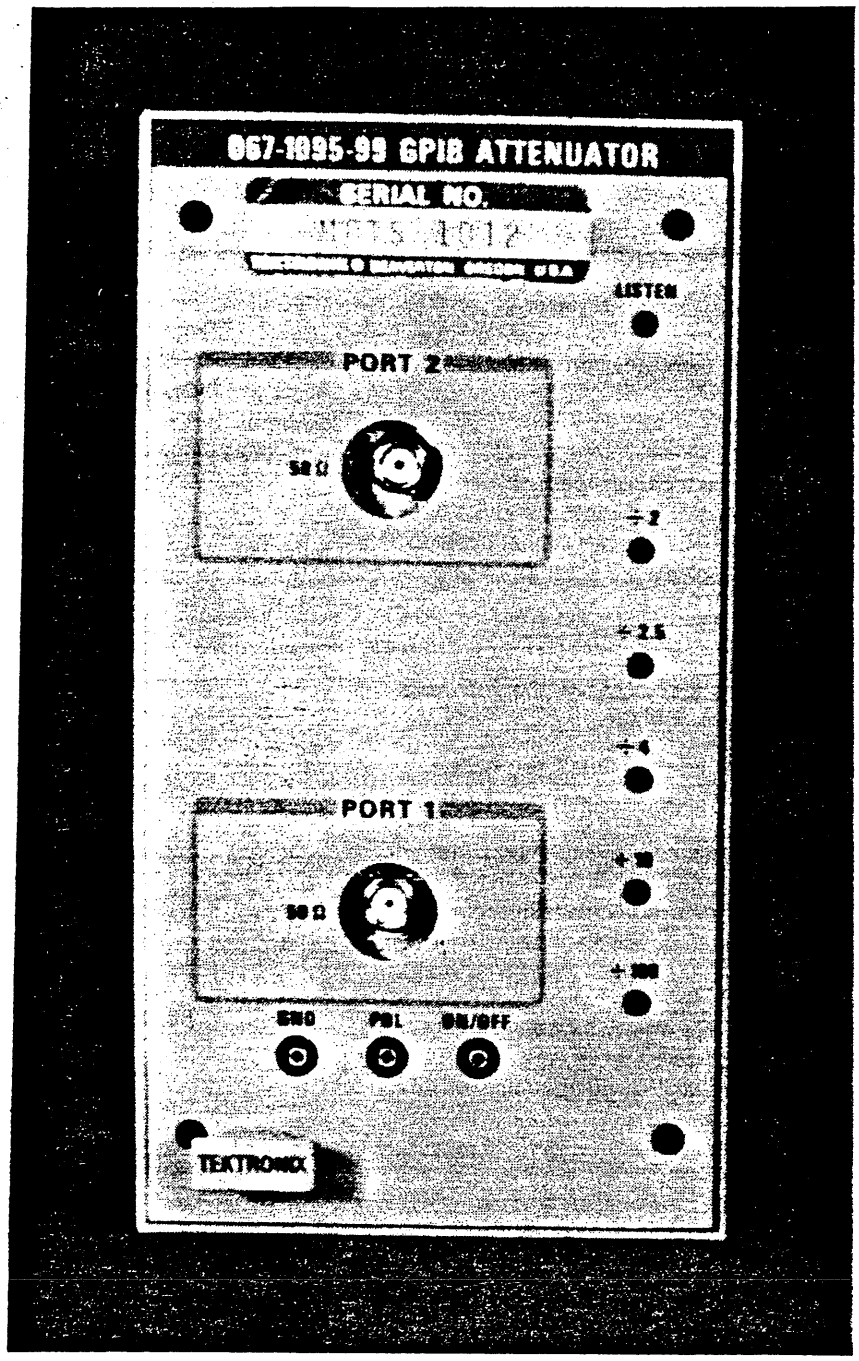

Frontispiece: Programmable Attenuator

SECTION 1

SPECIFICATION

1.1 Instrument Description

The GPIB PROGRAMMABLE RF ATTENUATOR is a one-wide plug-in that is compatible with the TM 5000-Series power module. Designed to correspond to standard oscilloscope input ranges following a 1-2-5 step sequence, the RF Attenuator offers voltage attenuation ratios of 1/2, 1/2.5, 1/4, 1/10 and 1/100 (0, 6, 8, 12, 20, 40 dB) in any combination. Frequency range is from DC to 18 GHz. The Attenuator in combination with the Pulse Generator provide pulse amplitudes from 10 mV to 25 V within the MPTS System specification of +- 10%.

The input and output RF connectors are SMA females.

1.2 IEEE 488 (GPIB) Function Capability

The RF Attenuator is programmable via the digital interface specified in IEEE Standard 488-1978, "Standard Digital Interface for Programmable Instrumentation". In MPTS manuals, the interface is commonly called the General Purpose Interface Bus (GPIB).

The Attenuator has no manually selectable functions or modes. It must be operated through the GPIB bus. It connects to the bus through a GPIB compatible connector on the TM 5000-Series power module. For more information on the GPIB interface connections, refer to Section 3, Theory of Operation.

1.3 Electrical Characteristics

TABLE 1-1

ELECTRICAL CHARACTERISTICS

Characteristics	Performance Requirements	Supplemental Info.
Frequency Range	DC to 18 GHz	
Isolation	60 dB min.	DC to 18 GHz
Max. Power	1 watt max. average at 75 C decreasing linearly to 0 at 125 C. 75 watts peak for 1 us, duty cycle 0.001.	
Switch Life	1,000,000 cycles min. per position.	
DC Contact Resistance	0.050 ohm max.	for 5000 cycles min.
Switching Time	50 millisecond max.	each position.
Temperature	Operating: -15 C to 75 C Non-operating: -62 C to 85 C	

ELECTRICAL CHARACTERISTICS

Characteristics	Performance Requirements	Supplemental Info.
Insertion Loss:		
Thru Mode	<Ø.6 dB DC to 4 GHz <1.6 dB 4 to 18 GHz	All these specifications have been degraded from component specifications.
1/2	6.Ø2 dB +/- Ø.15 dB	
1/2.5	7.96 dB +/- Ø.15 dB	
1/3.16	1Ø. dB +/- Ø.15 dB	1Ø dB is always paired with 3Ø dB.
1/4	12.Ø4 dB +/- Ø.15 dB	
1/1Ø	2Ø dB +/- Ø.15 dB	
1/31.62	3Ø dB +/- Ø.15 dB	3Ø dB is always paired with 1Ø dB.
Attenuation Repeatability	+/- Ø.5 dB DC to 18 GHz	for 5ØØØ cycles min.
VSWR	<1.25 from DC to 4.Ø GHz <1.85 from 4.Ø to 18 GHz	
Input and Output Resistance	5Ø.ØØ ohm +/- 1%	

1.4 Physical Characteristics

TABLE 1-2

PHYSICAL CHARACTERISTICS

Characteristics	Information
Net Weight	2 lbs., 6 oz
Maximum Overall Dimensions Height	126.Ø mm (4.96 inches)
Width	66.8 mm (2.63 inches)
Length	296.6 mm (11.68 inches)
Finish	Plastic laminate front panel. Anodized aluminum chassis.

SECTION 2

OPERATOR/PROGRAMMER INSTRUCTIONS

2.1 Installation and Removal

The GPIB Prog. Attenuator can only be used in the TM 5000-Series power modules. Refer to the Operator's Safety Summary in the front of this manual before installing this instrument in the power module.

!!!!!!!! CAUTION !!!!!!!!

TO PREVENT DAMAGE TO THE INSTRUMENT, TURN THE POWER MODULE OFF BEFORE INSTALLATION OR REMOVAL FROM THE POWER MODULE. DO NOT USE EXCESSIVE FORCE TO INSTALL OR REMOVE THE INSTRUMENT FROM THE POWER MODULE.

To install, insert the attenuator into the compartment and press firmly to seat the rear interface connector. Apply power by operating the POWER switch on the power module.

To remove the attenuator from the power module, turn off the POWER switch, pull the release latch knob (located in the lower left front corner) until the interconnecting jack disengages. Pull the attenuator straight out of the power module compartment.

2.2 Front Panel Indicators and Connectors

The GPIB Programmable Attenuator has no manually selectable functions or modes. It can be operated only from the GPIB. The connectors for, and indicators of, the unit are on the front panel. Signals are introduced through PORT 1 and output through PORT 2 via SMA connectors. The indicators are:

LISTEN - a light emitting diode which lights when the unit

has been placed by the controller in the Listener Active State (LACS).

FUNCTION - five light emitting diodes designated by front panel nomenclature which indicate the current level of attenuation.

ON/OFF - Not implemented at this time.

POL - Provides a TTL level high or low output.

GND - Provides front panel connection to ground.

2.3 Performance Check

To check out the Attenuator in the system, you may use either write a compiled BASIC program, or use the "KERMIT" utility and type the lines below.

The lines below switch each attenuator in and out. The amplitude of the pulse with the attenuator in is compared to the pulse with all of the attenuation out. This will verify the switching and the attenuation values. In addition, the pulse aberration should remain within MPTS Specifications, and the correct LED on the front panel should be lit.

KERMIT

SWINIT

CONNECT PULSE CH1

PULSE INIT

All LEDs on Attenuator should be lit. Measured pulse height should be about 1.25E-3 volts. Check this.

PULSE 25 VOLTS

All LEDs except LISTEN should be out. Pulse should measure 25 volts. Adjust oscilloscope if necessary for exactly a 5 divisions and note pulse shape. Note that we are going to check attenuation, not the oscilloscope or pulse generator.

PULSE 12.5 VOLTS

Is the '/' 2 LED lit and pulse height and shape OK (within MPTS Spec.)?

PULSE 1Ø VOLTS

Is the '/' 2.5 LED lit and pulse height and shape OK?

PULSE 2.5 VOLTS

Is '/' 1Ø LED lit and pulse height and shape OK?

PULSE 2.5E-1

Is '/' 1ØØ LED lit and pulse height and shape OK?

PULSE 2.5E-3

Are all LED's except '/' 2 lit and pulse height and shape still OK? Do to the constraints on the MPTS drivers, this is the only way we can check the '/' 4 attenuator.

PULSE INIT

All LEDs should back on come on.

Control P takes you out of KERMIT, but LEDs will stay on. However, going back into KERMIT will put all of them out. Then control P will get you out of KERMIT with Pulse Generator off.

2.4 MPTS Driver Programming Information

The MPTS Drivers call the attenuator by the PULSE command, because its only function of this command is to obtain the desired amplitude of the Pulse from the Pulse Generator, Ø67-1Ø94-ØØ. The attenuator is not used for any other purpose.

The calling convention is:

```
PULSE(COMMAND$, RESULT$, ECODE%)
```

COMMAND$ may consist of:

INIT	Sets the Pulse Generator for minimum output. This puts all attenuators in the line (1.25E-3 V).
number VOLTS	Sets the amplitude in volts. The MPTS range of "number" is 2.5E-3 to 25 volts in 2.5, 5, 1Ø steps.

All commands must be included in ' ' unless they are variables, in which case they must end with $. Multiple commands are separated by semicolons and are included within the same set of ' '. Spaces are ignored. Either HWINIT or INIT PORT 1 will extinguish LISTEN light.

2.5 Low-Level Programming Information

The following table gives low-level attenuator programming information. If the MPTS drivers are used, this information is not needed.

TABLE 2.1: LOW-LEVEL PROGRAMMING

ASCII CHAR	ATTENUATOR ELEMENT * X2	X2.5	X4	X10	X100	VOLTAGE RATIO
@	0	0	0	0	0	1
A	1					2
B		1				2.5
C	1	1				5
D			1			4
E	1		1			8
F		1	1			10
G	1	1	1			20
H				1		10
I	1			1		20
J		1		1		25
K	1	1		1		50
L			1	1		40
M	1		1	1		80
N		1	1	1		100
O	1	1	1	1		200
P					1	100
Q	1				1	200
R		1			1	250
S	1	1			1	500
T			1		1	400
U	1		1		1	800
V		1	1		1	1,000
W	1	1	1		1	2,000
X				1	1	1,000
Y	1			1	1	2,000
Z		1		1	1	2,500
[	1	1		1	1	5,000
\			1	1	1	4,000
]	1		1	1	1	8,000
^		1	1	1	1	10,000
_	1	1	1	1	1	20,000

* Values of 0 or blank means the attenuator element is not in the circuit. Values of 1 means the attenuator element is in the circuit.

The ASCII lower case characters, "a" through "DEL" give a negative pulse polarity with the same set of attenuation values. On MPTS, negative pulses are not used and the necessary connection (14B on the schematics) may not be implemented.

SECTION 3

THEORY OF OPERATION

3.1 Block Diagram Description

Refer to the Block Diagram, Figure 6-1 located in the pullout pages in Section 6.

The GPIB Interface Board (A-2) receives messages for the Attenuator from the System Controller and activates the proper Solenoid Drivers needed to obtain the requested attenuation. The GPIB interface also sends a signal to the power supply to reduce it from +13 volts (solenoid operating) to +7.3 volts (solenoid holding) after the solenoid operation is completed.

When activated, each solenoid driver applies current in the proper direction to its particular solenoid in the attenuator assembly. This switches in the attenuation in or out depending on the current direction.

The same lines from the GPIB interface that go to the Solenoid Drivers also go to inverters which drive the front panel LED display. The LAD (Listen Address) line also activates the inverter which drives the LED marked "LISTEN". This LED is lit every time there is a GPIB attenuator transaction.

3.2 GPIB Interface (Figure 6-3, page 6-4)

The GPIB interface communicates messages from the system controller to the attenuator hardware. It's key component is a TTL LSI circuit containing all the logic necessary to interface in accordance with the IEEE-488 standard for programmable instrumentation.

Contained in the GPIB interface block are a hex inverter to upright the negative logic of the GPIB bus and buffer the inputs; a D-type flip-flop to latch the data from the bus; and a TTL logic circuit (quad 2 input nand gates) to provide synchronization of data transfer to the attenuator hardware with bus

management signals.

The GPIB Interface circuitry is contained on its own board, and consists of the integrated circuits: U210, the FAIRCHILD 96LS488 GPIB circuit, U310, a TTL 7400 quad nand gate, U320, a TTL 74LS240 hex inverter, and U330, a TTL octal flipflop. The GPIB instrument address is selected by the five switches near U210. The 96LS488 chip is a TTL LSI circuit containing all the logic necessary to interface talk-, listen- or talk/listen- type instruments and system components in accordance with the IEEE 488 standard.

In this configuration, the 96LS488 chip is configured to be a listener, by the appropriate logic applied to pins 1, 46, 47 and 48. The TM5000 GPIB port connector is connected to the handshake, management, and data i/o lines of the 96LS488 chip. The data lines, DIO1-DIO8, also connect to the inputs of the hex inverter, U320, to up-right the negative logic of the GPIB bus and buffer the inputs. The outputs of the inverters are connected to the inputs of the octal flipflops, U330.

Notice the data line, DIO7. It is inverted and applied through two nand gates of U310 to the clock input terminal of the octal flipflops. Whenever a byte is to be latched into U330, the bit DIO7 has to be asserted. As the 96LS488 chip handshakes the current byte, the bit 7 ANDs with the handshake return signal, RXST, and accomplishes the clocking of the U330 octal flipflop.

The U330 latch outputs are provided to the square-pin connector, to apply the bits to the circuitry beyond. In this case, the bits are the commands for attenuation levels, as previously described.

For more GPIB information, refer to the last part of this Section: GPIB System Concepts page 3-5, or the IEEE Standard Digital interface for Programmable Instrumentation, IEEE Std. 488-1978.

3.3 Digital-Controlled Solenoid Drivers (Figure 6-2, page 6-3)

The primary elements in this block are 6 integrated circuit drivers (U151, U251, U254, U352, U451, U454). When data is applied to the logic inputs via data lines 5, 7, 9, 11, 13 of J390 which comes from the GPIB board, the drivers provide the required direction of current flow needed to actuate the solenoids. Each solenoid places its attenuator in 1 of 2 positions: the attenuation mode (1/2, 1/2.5, 1/4, 1/10, or 1/100) or through the mode (1/1).

The hex inverter integrated circuit (U370) insures that only one of the source-switch, sink-switch pairs within each driver is on at the same time.

Table 3-1: RF Interface Lines

LINE	PURPOSE	
P290-19	STB (strobe) enables 13 volts Vcc.	
-5	Enables 1/2	(-6 dB)
-7	Enables 1/2.5	(-8 dB)
-9	Enables 1/4	(-12 dB)
-11	Enables 1/10	(-20 dB)
-13	Enables 1/100	(-40 dB)
-3	Listen mode enabled	(LAD)

The 75325 attenuator solenoid drivers (U151, U251, etc) are described as monolithic integrated circuit memory drivers with logic inputs. Each device contains two 600 milliampere maximum source-switched pairs and two 600 milliampere maximum sink-switched pairs. Each attenuator driver output line is protected by a diode (CR150, CR152, etc) from the inductive kick that occurs when the solenoids change state. The source selection is determined by one of the two logic inputs (3, 11).

The sink selection is also determined by one of two logic inputs (6,14). Each sink-output collector has an internal pull-up resistor in parallel with a clamping diode connected to Vcc2. This arrangement provides protection from voltage surges associated with switching inductive loads.

A signal on the STB line (+13V enable on Block diagram) from the GPIB Interface triggers U286, a dual retriggerable resettable monostable multivibrator. Its output pulse turns off Transistor Q287 and the collector floats upward. The Vcc of the six attenuator drivers is raised to +13 V for about 100 ms which is sufficient to stitch the attenuator solenoids. After 100 ms, Vcc goes to +7.3 VDC, the holding voltage for the solenoids.

When the current flows from pin 15 to pin 7 of the 75325, the attenuation is switched in. The reverse current direction gives zero attenuation (the through mode). A holding voltage is necessary in either case. The no voltage condition gives an indeterminate result which may be an open circuit.

3.4 Attenuator Assembly (Figure 6-2, page 6-3)

The two, three-step attenuator assemblies (AT100, AT200) are connected in series by a loop of semi-rigid cable. There is a total of six attenuation sections which are listed below this paragraph. Each section is controlled by solenoids which receive drive signals from the solenoid drivers. The -10 dB and -30 dB attenuators marked with * are hard-wired in parallel to obtain a 1/100 (-40 dB) attenuation level. Therefore they can only be selected as a pair producing -40 dB total. With this single exception, any combination of the attenuation factors listed below can be program-selected via the data byte. Although all attenuators are used in MPTS, not all possible combinations are used, see Section 2-3 Program Information.

assembly 1	1/2	-6 db
	1/2.5	-8 db
	1/4	-12 db
assembly 2	1/3.16	-10 db *
	1/10	-20 db
	1/31.62	-30 db *

If an attenuator is not specifically addressed by the data byte, it reverts to the through mode (0 dB) position.

3.5 Front Panel Display (Figure 6-2)

Six light emitting diodes (LED) with 150 ohm current limiting resistors (R110) and a hex inverter buffer/driver (U220) are the components in this block.

The hex inverter re-inverts GPIB interface data logic levels on data lines 5, 7 9 11 13 of J390. This insures that the proper voltage level is provided to forward bias (turn on) the front panel LED which corresponds to the selected attenuation.

Power Supply (Figuer 6-2) The +5 volt regulated supply from U490 and the +7.3V solenoid holding voltage from U190 are derived from the +8V filtered DC from the power module.

The +13V DC pulse used to operate the solenoids is derived from the +26V raw DC from the power module. The duration of the pulse is controlled by C291 and R290 which are connected to the multivibrator, U286.

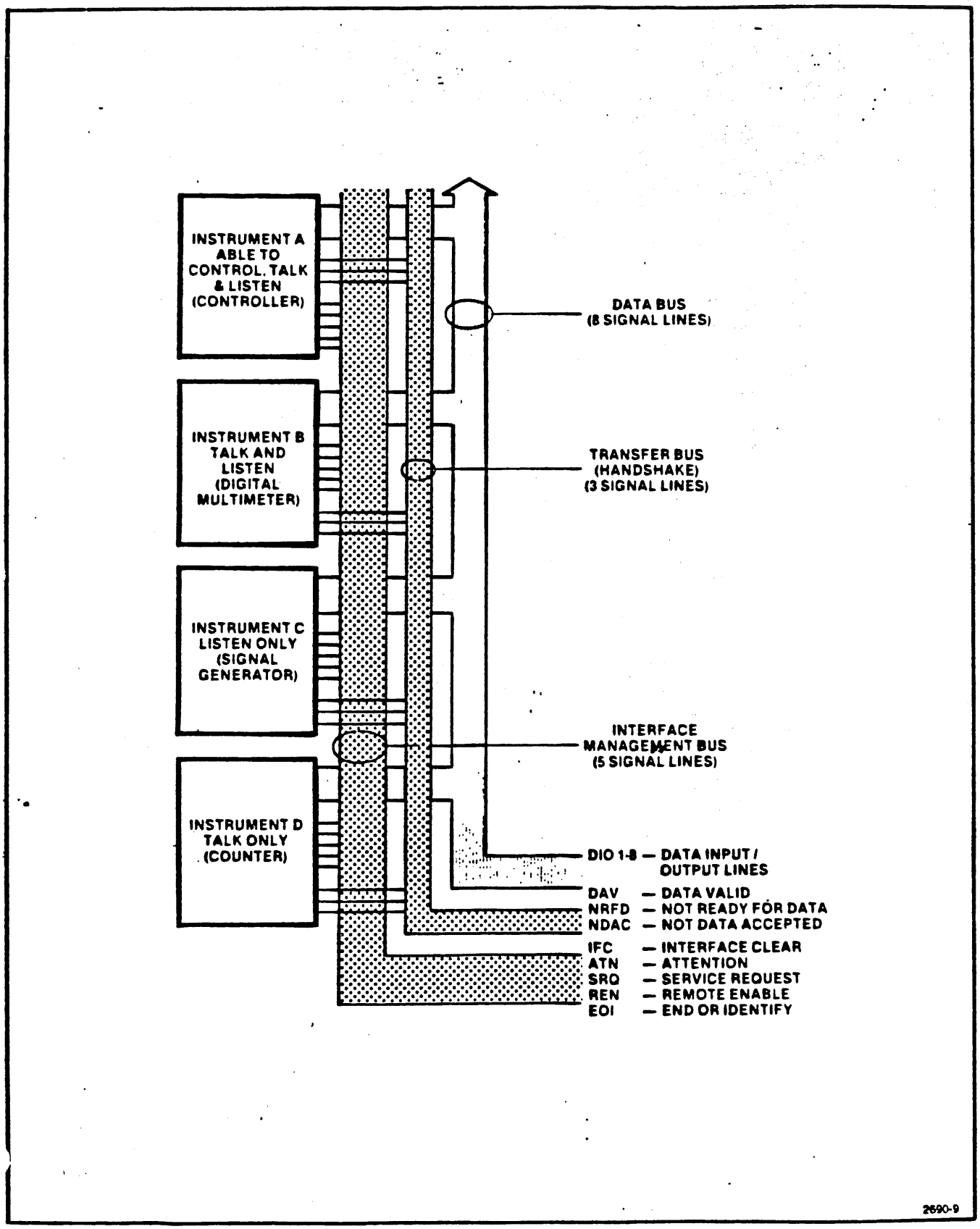

Fig. 3-5. A typical system using the general purpose interface bus (GPIB).

ASCII & IEEE 488 (GPIB) CODE CHART

BITS B7 B6 B5	0 0 0	0 0 1	0 1 0	0 1 1	1 0 0	1 0 1	1 1 0	1 1 1
B4 B3 B2 B1	CONTROL		NUMBERS SYMBOLS		UPPER CASE		LOWER CASE	
0 0 0 0	0 NUL 0	20 DLE 10 16	40 SP 20 32	60 0 30 48	100 @ 40 64	120 P 50 80	140 ` 60 96	160 p 70 112
0 0 0 1	1 GTL SOH 1 1	21 LLO DC1 11 17	41 ! 21 33	61 1 31 49	101 A 41 65	121 Q 51 81	141 a 61 97	161 q 71 113
0 0 1 0	2 STX 2 2	22 DC2 12 18	42 " 22 34	62 2 32 50	102 B 42 66	122 R 52 82	142 b 62 98	162 r 72 114
0 0 1 1	3 ETX 3 3	23 DC3 13 19	43 # 23 35	63 3 33 51	103 C 43 67	123 S 53 83	143 c 63 99	163 s 73 115
0 1 0 0	4 SDC EOT 4 4	24 DCL DC4 14 20	44 $ 24 36	64 4 34 52	104 D 44 68	124 T 54 84	144 d 64 100	164 t 74 116
0 1 0 1	5 PPC ENQ 5 5	25 PPU NAK 15 21	45 % 25 37	65 5 35 53	105 E 45 69	125 U 55 85	145 e 65 101	165 u 75 117
0 1 1 0	6 ACK 6 6	26 SYN 16 22	46 & 26 38	66 6 36 54	106 F 46 70	126 V 56 86	146 f 66 102	166 v 76 118
0 1 1 1	7 BEL 7 7	27 ETB 17 23	47 ' 27 39	67 7 37 55	107 G 47 71	127 W 57 87	147 g 67 103	167 w 77 119
1 0 0 0	10 GET BS 8 8	30 SPE CAN 18 24	50 (28 40	70 8 38 56	110 H 48 72	130 X 58 88	150 h 68 104	170 x 78 120
1 0 0 1	11 TCT HT 9 9	31 SPD EM 19 25	51) 29 41	71 9 39 57	111 I 49 73	131 Y 59 89	151 i 69 105	171 y 79 121
1 0 1 0	12 LF A 10	32 SUB 1A 26	52 * 2A 42	72 : 3A 58	112 J 4A 74	132 Z 5A 90	152 j 6A 106	172 z 7A 122
1 0 1 1	13 VT B 11	33 ESC 1B 27	53 + 2B 43	73 ; 3B 59	113 K 4B 75	133 [5B 91	153 k 6B 107	173 { 7B 123
1 1 0 0	14 FF C 12	34 FS 1C 28	54 , 2C 44	74 < 3C 60	114 L 4C 76	134 \ 5C 92	154 l 6C 108	174 ¦ 7C 124
1 1 0 1	15 CR D 13	35 GS 1D 29	55 – 2D 45	75 = 3D 61	115 M 4D 77	135] 5D 93	155 m 6D 109	175 } 7D 125
1 1 1 0	16 SO E 14	36 RS 1E 30	56 . 2E 46	76 > 3E 62	116 N 4E 78	136 ^ 5E 94	156 n 6E 110	176 ~ 7E 126
1 1 1 1	17 SI F 15	37 US 1F 31	57 / 2F 47	77 UNL ? 3F 63	117 O 4F 79	137 UNT — 5F 95	157 o 6F 111	177 RUBOUT (DEL) 7F 127
	ADDRESSED COMMANDS	UNIVERSAL COMMANDS	LISTEN ADDRESSES		TALK ADDRESSES		SECONDARY ADDRESSES OR COMMANDS	

KEY

octal	25 PPU	GPIB code
	NAK	ASCII character
hex	15 21	decimal

2690-10

Fig. 3-6. ASCII & IEEE 488 (GPIB) Code Chart.

3.6 GPIB SYSTEM CONCEPTS

GPIB SYSTEM CONCEPTS

INTRODUCTION

The GPIB is a digital interface that allows efficient communication between the components of an instrumentation system.

The primary purpose of the GPIB is to connect self-contained instruments to other instruments or devices. This means that the GPIB is an interface system independent of device functions.

There are four elements of the GPIB: mechanical, electrical, functional, and operational.

Of these four, only the last is device-dependent. Operational elements state the way in which an instrument reacts to a signal on the bus. These reactions are device-dependent characteristics and state the way in which the instruments use the GPIB via application software.

Mechanical Elements

The standard defines the mechanical elements: cables and connectors. Standardizing the connectors and cables ensures that GPIB-compatible instruments can be physically linked together with complete pin compatibility.

The connector has 24 pins, with 16 assigned to specific signals and eight to shields and grounds. Instruments on the bus may be arranged in a linear or star configuration.

Electrical Elements

The voltage and current values required at the connector nodes for the GPIB are based on TTL technology (power source not to exceed +5.25 V referenced to logic ground). The standard defines the logic levels as follows. Logical 1 is true state, low-voltage level ($\leqslant$+0.8 V), signal line is **asserted**. Logical 0 is false state, high-voltage level ($\geqslant$+2.0 V), signal line is **not asserted**.

Messages can be sent over the GPIB as either active-true or passive-true signals. Passive-true signals occur at a high-voltage level and must be carried on a signal line using open-collector devices. Active-true signals occur at a low-voltage level.

Functional Elements

The functional elements of the GPIB cover three areas:

1. **Ten interface functions** (listed in Table 3-9) that define the use of specific signal lines so that an instrument can receive, process, and send messages. The ten inter-

face functions—with their allowable subsets—provide an instrumentation system with complete communications and control capabilities.

Not every instrument on the bus has all ten functions because only those functions important to a particular instrument's purpose need be implemented.

2. The **specific protocol** by which the interface functions send and receive their limited set of messages.

3. The **logical and timing relationships** between allowable states for the interface signal lines.

Table 3-9

MAJOR GPIB INTERFACE FUNCTIONS

Interface Functions	Symbol
Source Handshake	SH
Acceptor Handshake	AH
Talker or Extended Talker	T or TE
Listener or Extended Listener	L or LE
Service Request	SR
Remote-Local	RL
Parallel Poll	PP
Device Clear	DC
Device Trigger	DT
Controller	C

A TYPICAL GPIB SYSTEM

Figure 3-5 illustrates an example of the GPIB and the nomenclature for the 16 active signal lines. Only four instruments are shown, but the GPIB can support up to 15 instruments connected directly to the bus. However, more than 15 devices can be interfaced to a single bus if they do not connect directly to the bus but are interfaced through a primary device. Such a scheme can be used for programmable plug-ins housed in a mainframe where the mainframe is addressed with a primary address code and the plug-ins are addressed with a secondary address code.

The instruments connected to a single bus cannot be separated by more than 20 meters (total cable length) and at least one more than half the number of instruments must be in the power-on state. To maintain the electrical characteristics of the bus, a device load must be connected for each two meters of cable length. Although instruments are usually spaced no more than two meters apart, they can be separated farther if the required number of device loads are lumped at any one point.

Controllers, Talkers, and Listeners

A **talker** is an instrument that can send data over the bus; a **listener** is an instrument that can accept data from the bus. No instrument can communicate until it is enabled to do so by the controller in charge of the bus.

A **controller** is an instrument that determines, by a software routine, which instrument will talk and which instruments will listen during any given time interval. The controller also has the ability to assign itself as a talker or listener whenever the program routine requires. In addition to designating the current talker and listeners for a particular communication sequence, the controller has the task of sending special codes and commands (called **interface messages**) to any or all of the instruments on the bus.

Interface Messages

The IEEE standard specifies that the interface messages, as shown in Fig. 3-6, ASCII & IEEE 488 (GPIB) Code Chart, be used to address and control instruments interfaced to the GPIB. Interface messages are sent and received only when the controller asserts the ATN bus line. The user can correlate interface message coding to the ISO 7-bit code by relating data bus lines DI01 through DI07 to bits 1 through 7, respectively.

Interface messages include the primary talk and listen addresses for instruments on the bus, addressed commands (only instruments previously addressed to listen respond to these commands), universal commands (all instruments, whether they have been addressed or not respond to these), secondary addresses for devices interfaced through their primary instrument, and secondary commands. At present, the standard classifies only two interface messages as secondary commands, Parallel Poll Enable (PPE) and Parallel Poll Disable (PPD). (Parallel Poll Enable means that *after* the controller configures the system for a parallel poll (PPC command), all instruments respond at the same time with status information on receipt of PPE).

Device Dependent Messages

The IEEE standard does not specify coding of device-dependent messages, messages that control the device's internal operating functions. After addressing (via interface messages) a talker and listener(s), the controller unasserts the ATN bus line. When ATN becomes false, any commonly-understood 8-bit binary code may be used to represent a device-dependent message.

The standard recommends that the alphanumeric codes associated with the numbers, symbols, and upper case characters (decimal 32 to decimal 94) in the ASCII Code Chart be used for device-dependent messages. One example of a device-dependent message is the ASCII character string

MODE V; U/D 5E-3; FREQ 1E3

which may tell an instrument to set its front-panel controls to the voltage mode, with 5.0 millivolt output at a frequency of 1000 Hz.

When 8-bit binary codes other than the ISO 7-bit code are used for device-dependent messages, the most significant bit must be on data line DI08 (for bit 8).

To summarize the difference between interface and device-dependent messages, remember that any message sent or received when the ATN line is asserted (true) is an interface message. Any message (data bytes) sent or received when the ATN line is unasserted (false) is a device-dependent message.

GPIB SIGNAL LINE DEFINITIONS

Figure 3-5 shows the 16 signal lines of the GPIB functionally divided into three component busses: an eight-line data bus, a three-line transfer control (handshake) bus, and a five-line management bus.

The Data Bus

The data bus has eight bidirectional signal lines, DI01 through DI08. Information, in the form of data bytes, is transferred over this bus. A handshake sequence between an enabled talker and the enabled listeners transfers one data byte (eight bits) at a time. Data bytes in an interface or device-dependent message are sent and received in a byte-serial, bit-parallel fashion over the data bus.

Since the GPIB handshake sequence is an asynchronous operation, the data transfer rate is only as fast as the slowest instrument involved in a data byte transfer at any one time. A talker cannot place data bytes on the bus faster than any one listener can accept them.

Figure 3-7 illustrates the flow of data bytes when a typical controller sends ASCII data to an assigned listener on the bus. The first data byte, decimal 44, enables device 12 as a primary listener and the secondary address, decimal 108, enables a plug-in device as the final destination of the data to follow. The data is the two ASCII characters, A and B (decimal 65 and decimal 66).

The decimal value for B is specified as negative to activate the EOI line and signify the end of the device-dependent message. The controller activates the ATN line again and sends the universal unlisten (UNL) and untalk (UNT) commands to clear the bus. Six handshake cycles on the Transfer Bus are required to send the six data bytes.

The Transfer Bus (Handshake)

Each time a data byte is sent over the data bus, an enabled talker and all enabled listeners execute a handshake sequence via the **transfer bus**. The transfer-bus signal lines are defined below. Figure 3-8 illustrates the basic timing relationship between the three signals. The ATN line is shown to illustrate the controller's role in the process. A flowchart for the handshake sequence is shown in Fig. 3-9.

Not Ready For Data (NRFD). An asserted NRFD signal line indicates one or more assigned listeners are not ready to receive the next data byte from the talker. When all of the assigned listeners for a particular data byte transfer have released NRFD, the NRFD line becomes unasserted (high). The RFD message (Ready For Data) tells the talker it may place the next data byte on the data bus.

Data Valid (DAV). The DAV signal line is asserted (low) by the talker after the talker places a data byte on the data bus. When asserted, DAV tells each assigned listener that a new data byte is on the data bus. The talker is inhibited from asserting DAV as long as any listener holds the NRFD signal line asserted.

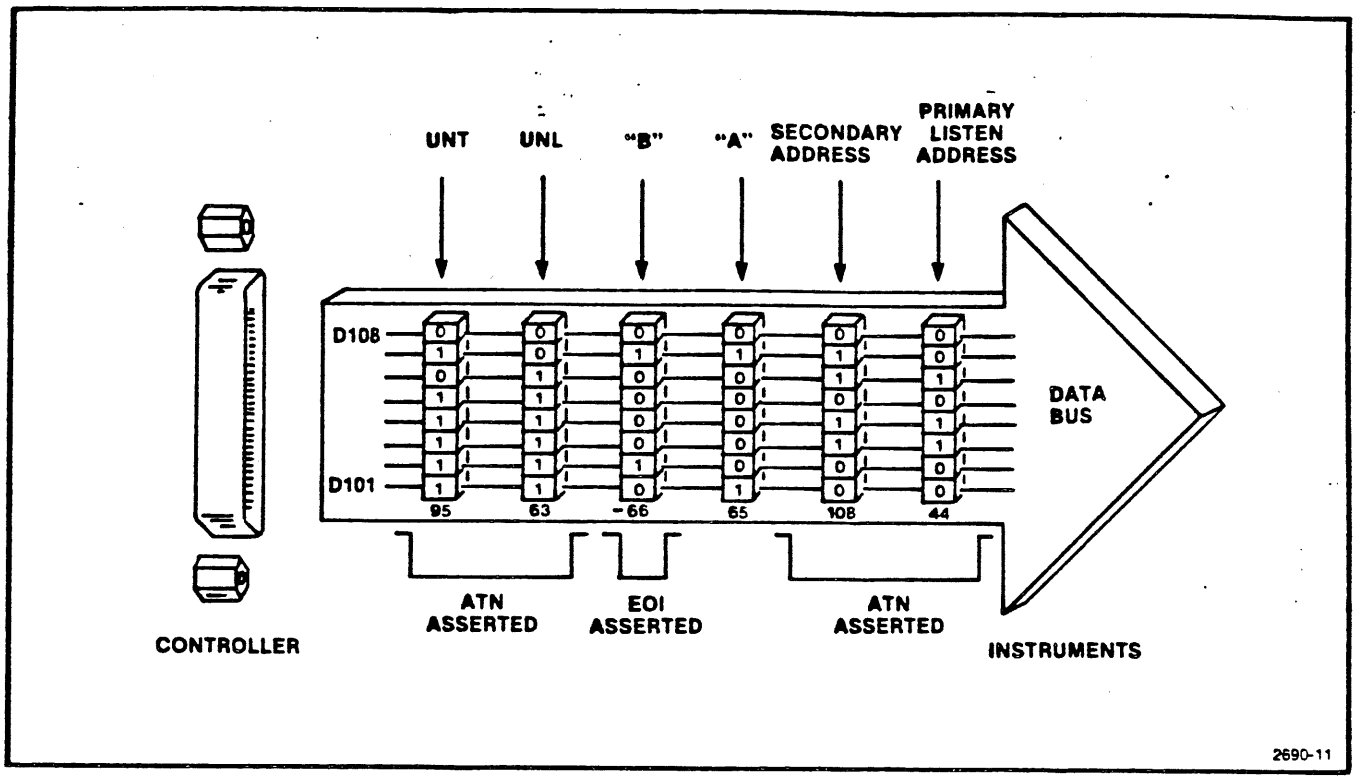

Fig. 3-7. An example of data byte traffic on the GPIB.

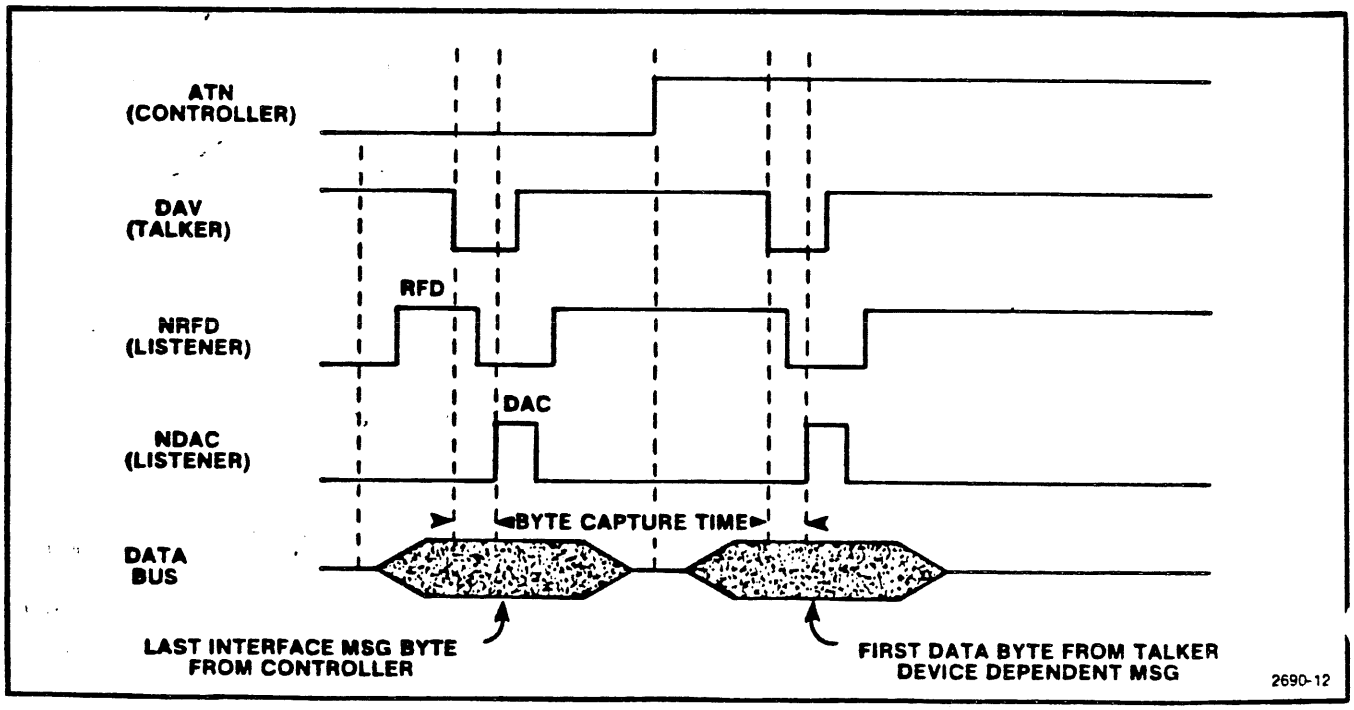

Fig. 3-8. A typical handshake timing sequence (idealized). Byte capture time is dependent on the slowest instrument involved in the handshake.

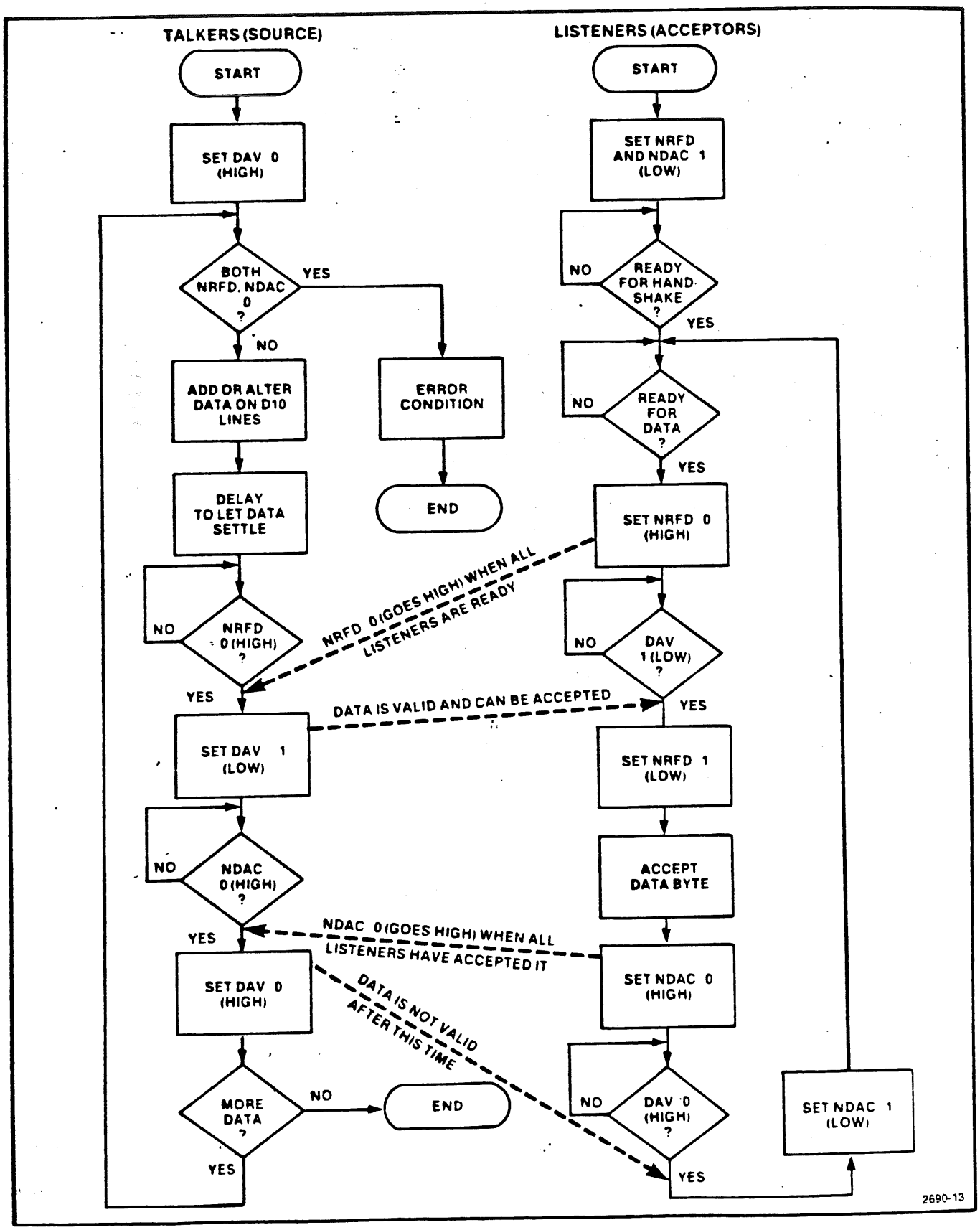

Fig. 3-9. The handshake flow chart.

Not Data Accepted (NDAC). Each assigned listener holds the NDAC signal line low-true (asserted) until the listener accepts the data byte currently on the data bus. When all assigned listeners accept the current data byte, the NDAC line becomes unasserted, telling the talker to remove the data byte from the bus. The DAC message (Data Accepted) tells the talker that all assigned listeners accepted the current data byte.

When one handshake cycle transfers one data byte, the listeners reset the NRFD line high and the NDAC line low before the talker asserts DAV for the next data byte transfer. NDAC and NRFD both high at the same time is an invalid state on the bus.

The Management Bus

The management bus is a group of five signal lines which are used to control the operation of the GPIB: IFC, ATN, SRQ, REN, and EOI.

Interface Clear (IFC). The system controller asserts the IFC signal line to place all interface circuitry in a predetermined quiescent state which may or may not be the power-on state.

Only the system controller can generate this signal. The IEEE standard specifies that only three interface messages (universal commands) be recognized while IFC is asserted: Device Clear (DCL), Local Lockout (LLO), and Parallel Poll Unconfigure (PPU).

Attention (ATN). A controller asserts the ATN signal line when instruments connected to the bus are being enabled as talkers or listeners and for other interface control traffic. As long as the ATN signal line is asserted (ATN = 1), only instrument address codes and control messages are transferred over the data bus. With the ATN signal line unasserted, only those instruments enabled as a talker and listener(s) can transfer data. Only the controller can generate the ATN signal.

Service Request (SRQ). Any instrument connected to the bus can request the controller's attention by asserting the SRQ line. The controller responds by asserting ATN and executing a serial poll to determine which instrument is requesting service. (An instrument requesting service identifies itself by asserting its DI07 line after being addressed.) After the instrument requesting service is found, program control is transferred to a service routine for that instrument. When the service routine is completed, program control returns to the main program. When polled, the instrument requesting service unasserts the SRQ line.

Remote Enable (REN). The system controller asserts the REN signal line whenever the interface system operates under remote program control. Used with other control messages, the REN signal causes an instrument on the bus to select between two alternate sources of programming data. A remote-local interface function indicates to an instrument that the instrument will use either information input from the front-panel controls (Local) or corresponding information input from the interface (Remote).

End or Identify (EOI). A talker can use the EOI to indicate the end of a data-transfer sequence. The talker asserts the EOI signal line as the last byte of data is transmitted. In this case, EOI is essentially a ninth data line and must observe the same setup times as the DI0 lines. When the controller is listening, it assumes that a data byte received is the last byte in the transmission (if the EOI signal line has been asserted). When the controller is talking, it may assert the EOI signal line as the last byte is transferred. The EOI signal is also asserted with the ATN signal if the controller conducts a parallel polling sequence. EOI is not used during serial polling.

NOTE

For detailed information on GPIB specifications, refer to IEEE 488-1975 (Revised 1978), published by the Institute of Electrical and Electronics Engineers, 245 East 47th Street, New York, New York 11117.

TABLE 3-3 GPIB CB POWER CONNECTIONS (REAR VIEW)

A3Ø ASSY - P142Ø (EITHER UNIT)

ASSIGNMENTS			ASSIGNMENTS	
FUNCTION	CONTACTS		CONTACTS	FUNCTION
	13B	->	<- 13A	
+26 VDC	12B	—>	<- 12A	+26 VDC
Collector of PNP series pass	11B	—>	<- 11A	Base of PNP series pass
	1ØB	->I	<- 1ØA	Emitter of PNP series pass
	9B	->I	<- 9A	
-26 VDC	8B	->	<- 8A	-26 VDC
Collector of NPN series pass	7B	->	<- 7A	Emitter of NPN series pass
Power Signal Input	6B	->	<- 6A	Base of NPN series pass
	5B	->	<- 5A	
Analog ground	4B	->	<- 4A	Analog ground
Digital ground	3B	->	<- 3A	Digital ground
+8 V Filtered DC	2B	->	<- 2A	+8 V Filtered DC
LSTE Ground (25 VAC)	1B	->	<- 1A	LSTB Source (25 VAC)

NOTES:

1. Pins with no labels are not used in either unit.
2. Pins 14 (A/B) through 28 (A/B) are not connected.
3. The Attenuator uses only 2A, 2B, 3A, 3B, 4A, 4B, 12A, 12B.

TABLE 3-4 GPIB CONNECTOR

A20 ASSY - P1005 (MI 5010 ONLY)

ASSIGNMENTS			ASSIGNMENTS	
FUNCTION	CONTACTS		CONTACTS	FUNCTION
DIO1	1		2	DIO5
DIO2	3		4	DIO6
DIO3	5		6	DIO7
DIO4	7		8	DIO8
$\overline{CE}$	9		10	$\overline{YE}$
EOI	11		12	IFC
DAV	13		14	SRQ
NRFD	15		16	ATN
NDAC	17		18	REN
No connection	19		20	$\overline{SYS}$

NOTES:

The following three lines are connected and active on the GPIB connector (P1005) only. They are not connected or active on the interface bus defined by IEEE Standard 488-1978. They are reserved for use with a possible bidirectional buffer card option in the power module.

$\overline{CE}$ (pin 9) - For devices that can be or look like controllers.

$\overline{TE}$ (pin 10) - Open collector talk control for buffer card; Low=Talk.

$\overline{SYS}$ (pin 20)- For devices that can be system controllers.

SECTION 4

CALIBRATION

This unit does not need calibration. See Section 2-3 for performance check.

SECTION 5

REPLACEABLE PARTS LIST Ø67-1Ø95-99

5.1 Parts ordering information

Replacement parts are available from or through your local Tektronix Inc. Field Office or representative.

It is important, when ordering parts, to include the following information in your order: Part number, instrument type or number, serial number, and modification number if applicable.

Change information, if any, is located at the rear of this manual.

5.2 Component Number System

A list of assemblies can be found at the beginning of the Electrical Parts List. The assemblies are listed in numerical order. When the complete component number is known, this list will identify the assembly in which the part is located.

A numbering method has been used to identify assemblies, subassemblies, and parts. For example the Component Number:

A1C14Ø

consists of Assembly Number, A1 followed by Circuit Number, C14Ø. Read: Capacitor 14Ø of Assembly A1.

Only the circuit number will appear on the diagrams and circuit board illustrations. Each diagram is marked with the assembly number.

The Electrical Parts List is divided and arranged by assemblies in numerical sequence (e.g., assembly A1 with its subassemblies and parts, precedes assembly

A2 with it subassemblies and parts).

Chassis-mounted parts have no assembly number prefix and are located at the end of the Electrical Parts List.

REPLACEABLE ELECTRICAL PARTS Ø67-77ØØ-ØØ (main board)

COMPONENT NUMBER	PART NUMBER	DESCRIPTION	NOTES
A1	67Ø-77ØØ-ØØ	Atten. Board Ass'y	
	388-8Ø25-ØØ	Atten. Board (raw)	
	(E8Ø89 XB)	Film Number	
A1AT1ØØ	119-1ØØ7-Ø2	Attenuator Assembly	2, 2.5, 4x
A1AT2ØØ	119-1ØØ7-ØØ	Attenuator Assembly	1Ø, 2Ø, 3Ø dB.
A1C18Ø	29Ø-Ø748-ØØ	CAP 1Ø uf 25V	
A1C181	283-Ø111-ØØ	CAP Ø.1 uf 5ØV	
A1C191	283-Ø198-ØØ	CAP Ø.22 uf 5ØV	
A1C25Ø	283-Ø111-ØØ	CAP Ø.1 uf 5ØV	
A1C291	29Ø-Ø534-ØØ	CAP 1 uf 35V	Tantalum
A1C38Ø	283-Ø111-ØØ	CAP Ø.1 uf 5ØV	
A1C45Ø	283-Ø111-ØØ	CAP Ø.1 uf 5ØV	
A1C48Ø	283-Ø111-ØØ	CAP Ø.1 uf 5ØV	
A1C481	29Ø-Ø748-ØØ	CAP 1Ø uf 25V	
A1C491	283-Ø198-ØØ	CAP Ø.22 uf 5ØV	
A1C492	29Ø-Ø8Ø4-ØØ	CAP 1Ø uf 25V	
A1CR15Ø	152-Ø141-Ø2	Diode 1N4152	
A1CR152	152-Ø141-Ø2	Diode 1N4152	
A1CR153	152-Ø141-Ø2	Diode 1N4152	
A1CR16Ø	152-Ø1Ø7-ØØ	Diode 1N647	
A1CR252	152-Ø141-Ø2	Diode 1N4152	
A1CR253	152-Ø141-Ø2	Diode 1N4152	
A1CR28Ø	152-Ø141-Ø2	Diode 1N4152	
A1CR35Ø	152-Ø141-Ø2	Diode 1N4152	
A1CR351	152-Ø141-Ø2	Diode 1N4152	
A1CR353	152-Ø141-Ø2	Diode 1N4152	
A1CR354	152-Ø141-Ø2	Diode 1N4152	
A1CR452	152-Ø141-Ø2	Diode 1N4152	
A1CR453	152-Ø141-Ø2	Diode 1N4152	
A1CR46Ø	152-Ø1Ø7-ØØ	Diode 1N647	
A1CR55Ø	152-Ø141-Ø2	Diode 1N4152	
A1J1ØØ	131-1857-ØØ	GOLD PINS ON BACK	Need 7 pins.
A1J111			No pins. LED leads directly soldered
A1J39Ø	131-1857-ØØ	GOLD PINS ON BACK	Need 2Ø pins.
A1J54Ø	131-1857-ØØ	GOLD PINS ON BACK	Need 7 pins.
A1P1ØØ			Under Mech. parts.
A1P54Ø			Under Mech. parts.
A1P9ØØ		Edge-card connector	Part of main board.

REPLACEABLE ELECTRICAL PARTS Ø67-77ØØ-ØØ (main board)

COMPONENT NUMBER	PART NUMBER	DESCRIPTION	NOTES
A1Q287	151-Ø3Ø2-ØØ	TRANSISTOR NPN	
A1R11Ø	3Ø7-Ø611-ØØ	SIP RES 15Øohm (7)	
A1R284	315-Ø1Ø3-ØØ	RES 1Øk ohm 1/4w 5%	
A1R285	315-Ø472-ØØ	RES 4.7k ohm 1/4w 5%	
A1R29Ø	315-Ø1Ø4-ØØ	RES 1ØØk ohm 1/4w 5%	
A1TP475	214-Ø579-ØØ	Test Points	
A1TP481	214-Ø579-ØØ	Test Points	
A1U151	156-Ø2Ø6-ØØ	I.C. SN75325N 16 DIP	
A1U19Ø	156-Ø277-ØØ	Linear IC Volt. Reg.	LM34ØT-5
A1U22Ø	156-Ø153-ØØ	I.C. SN74Ø6 14 DIP	
A1U251	156-Ø2Ø6-ØØ	I.C. SN75325N 16 DIP	
A1U254	156-Ø2Ø6-ØØ	I.C. SN75325N 16 DIP	
A1U286	156-Ø4Ø5-ØØ	I.C. F96Ø2PC 16 DIP	
A1U352	156-Ø2Ø6-ØØ	I.C. SN75325N 16 DIP	
A1U37Ø	156-Ø385-ØØ	I.C. SN74LSØ4N 14 DIP	
A1U451	156-Ø2Ø6-ØØ	I.C. SN75325N 16 DIP	
A1U454	156-Ø2Ø6-ØØ	I.C. SN75325N 16 DIP	
A1U49Ø	156-Ø277-ØØ	Linear IC Volt. Reg.	LM34ØT-5
A1W1ØØ	Ø15-1Ø15-ØØ	Coaxial cable	With SM connectors.
A1W281	131-Ø566-ØØ	RESISTOR Ø ohm	

REPLACEABLE MECHANICAL PARTS Ø67-77ØØ-ØØ (main board)

PART NUMBER	QTY PER	DESCRIPTION	NOTES
1Ø5-Ø718-Ø1	1	LATCH RELEASE BAR	WHITE
1Ø5-Ø719-ØØ	1	PLUG-IN RETAIN LATCH	BLACK
131-Ø7Ø7-ØØ	12	CONNECTORS	MINI PV
136-Ø26Ø-Ø2	7	I C SOCKET 16 DIP	
136-Ø269-ØØ	2	I C SOCKET 14 DIP	
175-Ø825-Ø1	8"	RIBBON CABLE	
175-4287-ØØ	1	CABLE ASSY 2ØDIP	3M REMOVE ONE MAIN RELIEF FOR GPIB BD
2ØØ-1273-XX	1	SUB PANEL COVER	
	1	SUB PANEL REAR	
21Ø-Ø438-ØØ	4	NUT 1-72	FRONT PANEL
21Ø-Ø586-ØØ	6	NUT 4-4Ø	ATTEN REG
21Ø-1178-ØØ	2	SHLDR WASHER	REG INSULATE
211-Ø116-ØØ	2	SCR 4-4Ø X .312phs	GPIB SUSPEND
211-Ø121-ØØ	6	SCR 4-4Ø X .4ØØpan	ATTN,REG,BRD SECURE
211-Ø125-ØØ	4	SCR 1-72 X .25Øpan	FRONT PANEL
211-Ø6Ø1-ØØ	4	SCR 6-32 X .312phs	GPIB SUSPEND'
213-Ø146-ØØ	2	SCR TPG 6-2Ø x.312phs	FRT BRD HANG
213-Ø229-ØØ	4	SCR TPG 6-2Ø x.75fhs	FRT PANEL SECURE
213-Ø254-ØØ	1	SCR TPG 2-5Ø x.25phs	LATCH SECURE
213-Ø868-ØØ	2	SCR,TPG, 6-32 X .375	REAR PANEL SECURE
214-1Ø61-ØØ	1	SPRING CLIP	FRONT PANEL SLOT
22Ø-Ø729-ØØ	1	NUT BLOCK	GPIB HANG
333-1483-XX	1	FRONT PANEL	
337-1399-ØØ	2	ELEC. SHIELD	
342-Ø2Ø2-ØØ	2	MICA INSULATOR	REG INSULATE
352-Ø169-Ø2	1	HARMONICA BODY	2 PLACE RED
352-Ø169-Ø5	5	HARMONICA BODY	2 PLACE GREEN
366-169Ø-ØØ	1	LATCH KNOB	SILVER/GREY
385-Ø122-ØØ	2	NUT HEX POST	GPIB HANG
386-3657-Ø1	2	SUPPORT, PLUG-IN	SECURE REAR PANEL
386-4426-ØØ	1	REAR FRAME SUPPORT	
426-Ø724-ØØ	1	FRAME SEC.PLUG-IN UNIT	BOTTOM RACK
426-Ø725-ØØ	1	FRAME SEC.PLUG-IN UNIT	TOP RACK

REPLACEABLE ELECTRICAL PARTS Ø67-769Ø-ØØ (GPIB board)

COMPONENT NUMBER	PART NUMBER	DESCRIPTION	NOTES
A2	67Ø-769Ø-ØØ	GPIB BOAD ASSY	
	388-8Ø68-ØØ	RAW BOARD	
	(E8Ø94XB)	FILM NUMBER	
A2C23Ø	283-Ø114-ØØ	CAP 15ØØpf	
A2C24Ø	283-Ø111-ØØ	CAP .1uf	
A2C321	283-Ø111-ØØ	CAP .1uf	
A2C231	281-Ø786-ØØ	CAP 15Øpf	
A2CR334	152-Ø141-Ø2	DIODE 1N4152	
A2P34Ø	131-1857-ØØ	GOLD PINS	
A2R131	3Ø7-Ø542-ØØ	RES SIP 3.3K	
A2R332	315-Ø151-ØØ	RES 15Ø OHMS 1/4W 5%	
A2R333	315-Ø151-ØØ	RES 15Ø OHMS 1/4W 5%	
A2S13Ø	26Ø-1827-ØØ	5 SPST	
A2U21Ø	156-1666-ØØ	IC 93LS488 48 DIP	
A2U31Ø	156-Ø382-ØØ	IC 74LSØØ 14 DIP	
A2U32Ø	156-Ø914-ØØ	IC 74LS24Ø 2Ø DIP	
A2U33Ø	156-Ø865-ØØ	IC 74LS273 2Ø DIP	

REPLACEABLE MECHANICAL PARTS 67Ø-769Ø-ØØ (GPIB board)

COMPONENT NUMBER	PART NUMBER	QTY PER	DESCRIPTION	NOTES
	136-Ø269-Ø2	1	14 DIP SOCKETS	
	136-Ø578-ØØ	2	24 DIP SOCKETS	
	136-Ø634-ØØ	2	2Ø DIP SOCKETS	
	214-Ø579-ØØ	2	TEST POINTS	

REPLACEABLE ELECTRICAL PARTS Ø67-XXXX-ØØ (LED board)

COMPONENT NUMBER	PART NUMBER	DESCRIPTION	NOTES
A3		E8318X	Film Number. (No 388- or 67Ø- numbers)
A3DS1ØØ	15Ø-1Ø14-ØØ	LED RED	
A3DS1Ø1	15Ø-1Ø71-ØØ	LED GREEN	
A3DS1Ø2	15Ø-1Ø71-ØØ	LED GREEN	
A3DS1Ø3	15Ø-1Ø71-ØØ	LED GREEN	
A3DS1Ø4	15Ø-1Ø71-ØØ	LED GREEN	
A3DS1Ø5	15Ø-1Ø71-ØØ	LED GREEN	

REPLACEABLE MECHANICAL PARTS Ø67-XXXX-ØØ (LED board)

PART NUMBER	QTY PER	DESCRIPTION	NOTES
352-Ø169-Ø8	6	Holder, Term. Con.	For LED's
XXX-XXXX-XX	1	LED WIRING KIT	

SECTION 6

DIAGRAMS

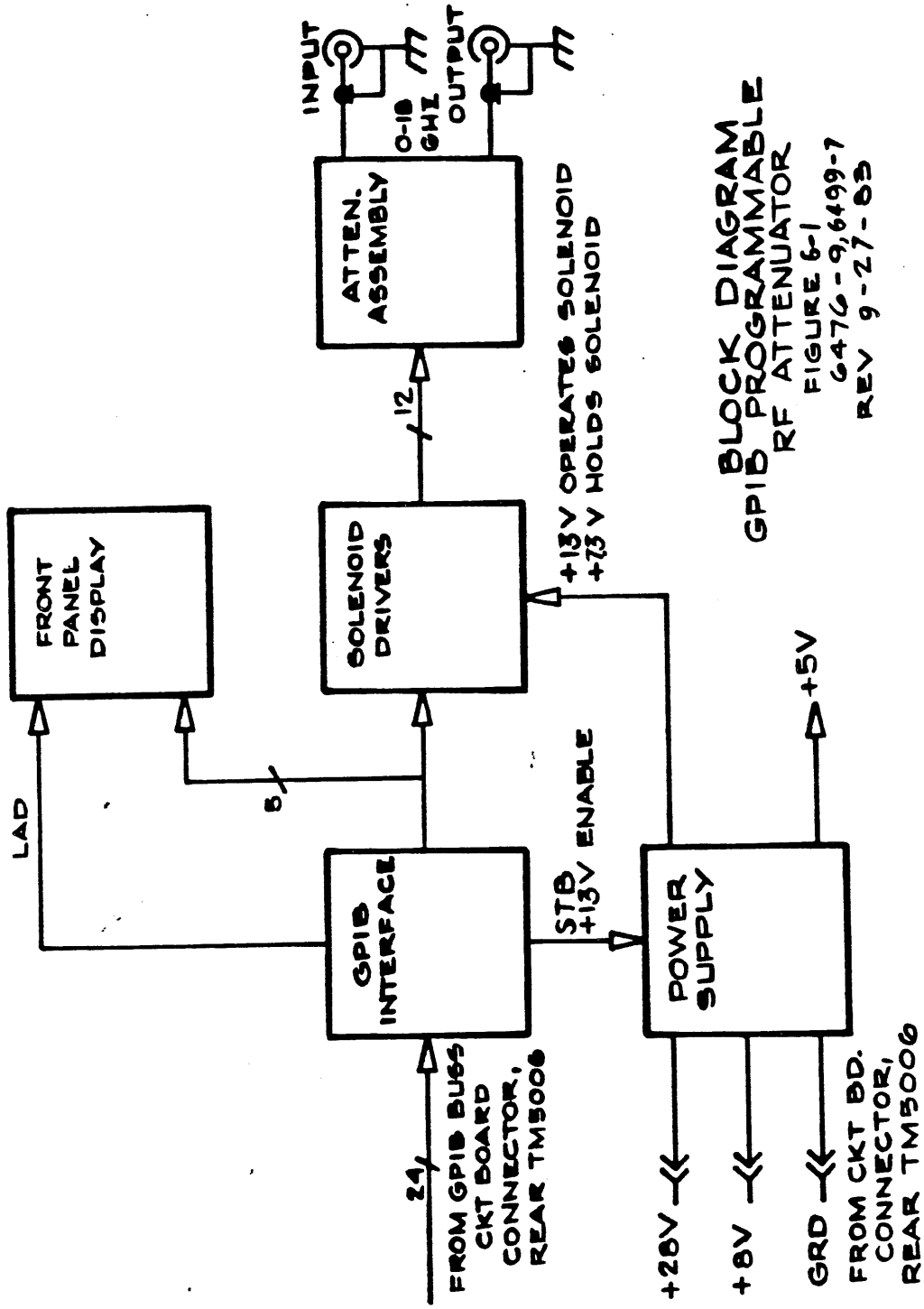

BLOCK DIAGRAM
GPIB PROGRAMMABLE
RF ATTENUATOR
FIGURE 6-1
6476-9,6499-7
REV 9-27-83

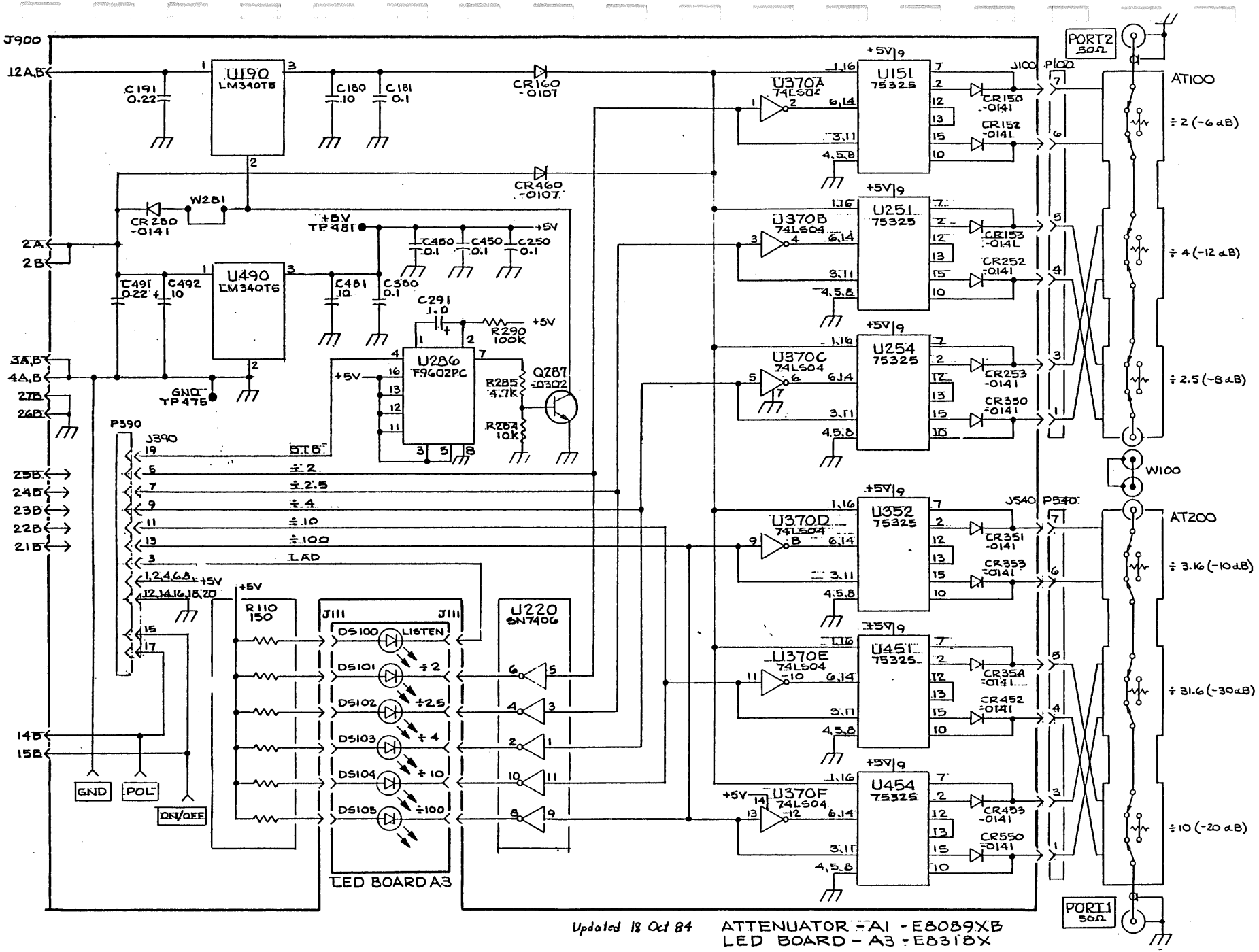

Updated 18 Oct 84

ATTENUATOR - A1 - E8089XB
LED BOARD - A3 - E8318X
GPIB BOARD - A2 - E8094XB

ATTEN & LED BOARD SCHEMATIC
670-7700-00 FIGURE 6-2

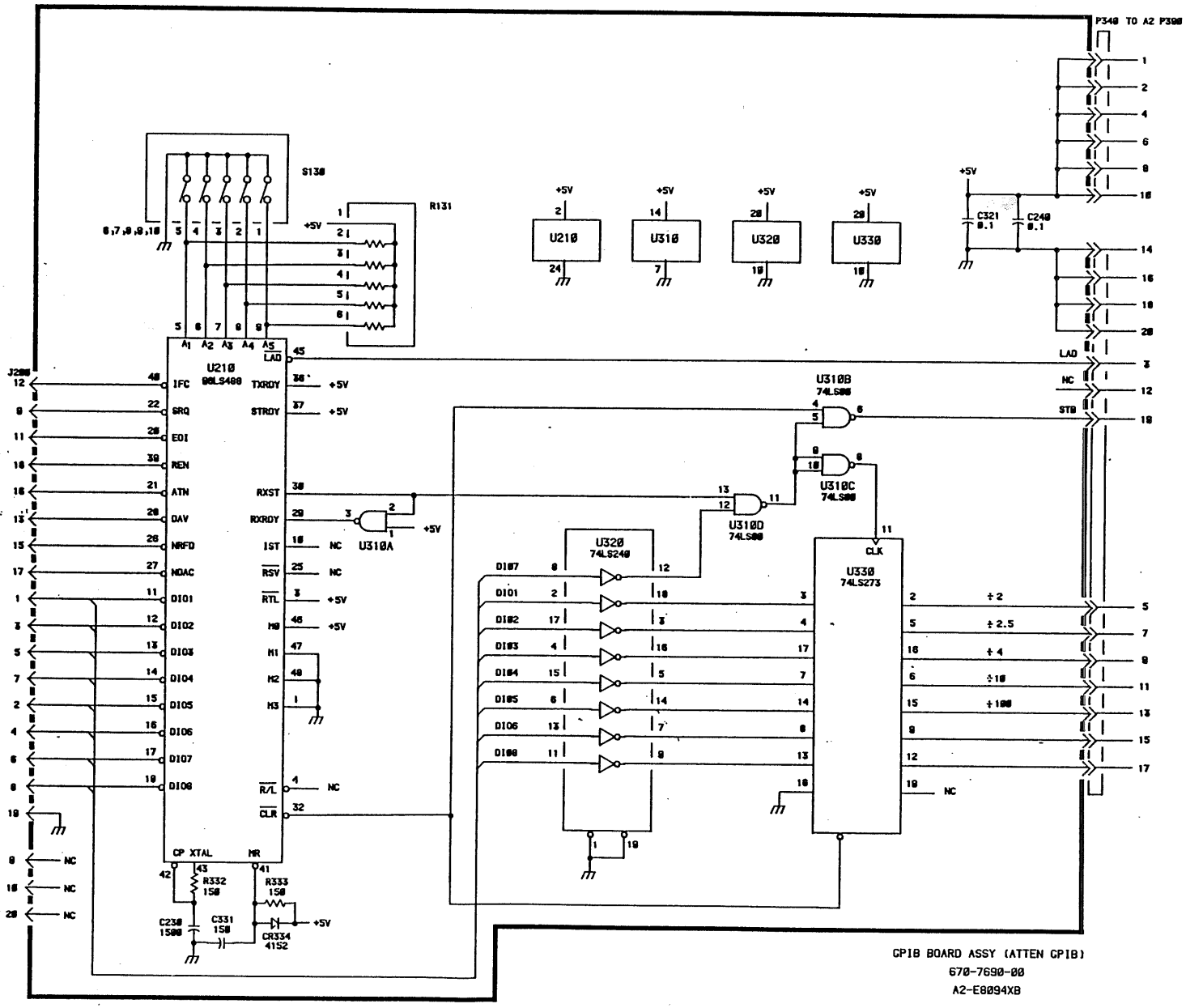

GPIB BOARD ASSY (ATTEN GPIB)
670-7690-00
A2-E8094XB

FIGURE 6-3

SECTION 7

INDEX

attenuator assy 3-4

block diagram 3-1

calibration 4-1
characteristics, electrical 1-2
characteristics, physical 1-4
circuit description, attenuator assy . 3-4
circuit description, GPIB 3-1
circuit description, LED 3-4
circuit description, power supply . . . 3-4
circuit description, Solenoid Drivers . 3-2
controller 3-1

display, LED 3-4

gpib 3-1
GPIB 1-1

IEEE interface 1-1
indicators, LED 2-1
installation and removal 2-1
interface lines 3-3

kermit 2-2

LED 2-1

parts list 5-1
performance check 2-2
power supply 3-4
programming 2-3
pulse generator 1-1

solenoid drivers 3-2
STB 3-3

TM 5000 1-1

voltage attenuation ratios 1-1