TEK SERVICE MANUAL

2246 1Y, 2R and 2246 MOD A

PORTABLE OSCILLOSCOPE

SERVICE

SN B700100 and ABOVE (2246 1Y, 2R)
SN B100100 and ABOVE (2246 MOD A)

Tektronix®
COMMITTED TO EXCELLENCE

TEK SERVICE MANUAL

Part No. 070-7062-00
Product Group 46

2246 1Y, 2R and 2246 MOD A PORTABLE OSCILLOSCOPE

SERVICE

SN B700100 and ABOVE (2246 1Y, 2R)
SN B100100 and ABOVE (2246 MOD A)

The 2246 2R is a rackmount version of the 2246 1Y. This service manual and the 2240F1R Instruction sheet (Tektronix part number 070-6332-00) are required to fully service the 2246 2R oscilloscope.

WARNING

The following servicing instructions are for use by qualified service personnel only. To avoid personal injury, do not perform any servicing unless you are qualified to do so. Refer to the Safety Summary prior to performing any service.

Please check for CHANGE INFORMATION at the rear of this manual.

First Printing JUL 1988
Revised OCT 1991

Tektronix®
COMMITTED TO EXCELLENCE

Copyright © 1988 Tektronix, Inc. All rights reserved. Contents of this publication may not be reproduced in any form without the written permission of Tektronix, Inc.

Products of Tektronix, Inc., and its subsidiaries are covered by U.S. and foreign patents issued and pending.

TEKTRONIX, TEK, SCOPE-MOBILE, and are registered trademarks of Tektronix, Inc.

Printed in U.S.A. Specification and price change privileges are reserved.

INSTRUMENT SERIAL NUMBERS

Each instrument has a serial number on a panel insert, tag, or stamped on the chassis. The first two digits designate the country of manufacture. The last five digits of the serial number are unique to each instrument. The country of manufacture is identified as follows:

B000000	Tektronix, Inc., Beaverton, Oregon, U.S.A.
E200000	Tektronix United Kingdom, Ltd., Marlow
G100000	Tektronix Guernsey, Ltd., Channel Islands
HK00000	Hong Kong
H700000	Tektronix Holland, NV, Heerenveen, The Netherlands
JP00000	Sony/Tektronix, Japan

TABLE OF CONTENTS

Page

LIST OF ILLUSTRATIONS vi
LIST OF TABLES vii
OPERATORS SAFETY SUMMARY viii
SERVICING SAFETY SUMMARY ix

Section 1 SPECIFICATION

INTRODUCTION 1-1
STANDARD ACCESSORIES 1-1
RECOMMENDED RECALIBRATION SCHEDULE 1-1
PERFORMANCE CONDITIONS .. 1-2

Section 2 PREPARATION FOR USE

SAFETY 2-1
LINE VOLTAGE AND POWER CORD 2-1
LINE FUSE 2-1
INSTRUMENT COOLING 2-2
START-UP 2-2
DETAILED OPERATING INFORMATION 2-2

Section 3 THEORY OF OPERATION

SECTION ORGANIZATION 3-1
INTEGRATED CIRCUIT DESCRIPTIONS 3-1
BLOCK DIAGRAM DESCRIPTION 3-1
INTRODUCTION 3-1

Page

VERTICAL INPUTS (Diagram 1) 3-1
VERTICAL PREAMPS AND OUTPUT AMPLIFIER (Diagram 2) 3-2
A AND B TRIGGER SYSTEM (Diagram 3) 3-2
DISPLAY AND TRIGGER LOGIC AND PROCESSOR INTERFACE (Diagram 4) 3-3
A AND B SWEEPS AND DELAY COMPARATORS (Diagram 5) 3-4
HORIZONTAL OUTPUT AMPLIFIER (Diagram 6) 3-4
Z-AXIS, CRT, PROBE ADJUST, AND CONTROL MUX (Diagram 7) 3-4
MEASUREMENT PROCESSOR (Diagram 8) 3-5
READOUT SYSTEM (Diagram 9) 3-5
SWITCH BOARD AND INTERFACE (Diagram 10) 3-6
ADC AND DAC SYSTEM (Diagram 11) 3-6
POWER SUPPLY (Diagram 12) 3-6
DETAILED CIRCUIT DESCRIPTION 3-6
VERTICAL INPUTS (Diagram 1) 3-6
VERTICAL PREAMPS AND OUTPUT AMPLIFIER (Diagram 2) 3-9
A AND B TRIGGER SYSTEM (Diagram 3) 3-12
DISPLAY AND TRIGGER LOGIC AND PROCESSOR INTERFACE (Diagram 4) 3-16

TABLE OF CONTENTS (cont)

Page

A AND B SWEEPS AND DELAY COMPARATORS (Diagram 5) 3-31
HORIZONTAL OUTPUT AMPLIFIER (Diagram 6) 3-37
Z-AXIS, CRT, PROBE ADJUST, AND CONTROL MUX (Diagram 7) 3-38
MEASUREMENT PROCESSOR (Diagram 8) 3-42
READOUT SYSTEM (Diagram 9) 3-45
SWITCH BOARD AND INTERFACE (Diagram 10) 3-51
ADC AND DAC SYSTEM (Diagram 11) 3-52
POWER SUPPLY (Diagram 12) 3-53
MAIN BOARD POWER DISTRIBUTION (Diagram 13) 3-58
PROCESSOR POWER BOARD DISTRIBUTION (Diagram 14) .. 3-58
INTERCONNECTION DIAGRAM (Diagram 15) 3-58

Section 4 PERFORMANCE CHECK PROCEDURE

INTRODUCTION 4-1
TEST EQUIPMENT REQUIRED .. 4-1
PERFORMANCE CHECK INTERVAL 4-1
PREPARATION 4-1
INDEX TO PERFORMANCE CHECK PROCEDURE 4-4
DISPLAY 4-5
TRACE ROTATION 4-5
GEOMETRY 4-5

Page

VERTICAL 4-6
Input COUPLING Functional Check 4-6
CH 1 and CH 2 VOLTS/DIV Trace Shift 4-6
CH 3 and CH 4 VOLTS/DIV Trace Shift 4-7
CH 1 and CH 2 VAR VOLTS/DIV Trace Shift 4-7
CH 1 and CH 2 Input COUPLING Trace Shift 4-7
CH 2 INVERT Trace Shift 4-7
CH 1 and CH 2 VAR VOLTS/DIV Range 4-7
Low-Frequency Linearity 4-8
CH 1 and CH 2 Vertical Deflection Accuracy 4-8
Ch 3 and CH 4 Vertical Deflection Accuracy 4-8
ADD Mode and CH 2 INVERT Deflection Accuracy 4-9
Vertical POSITION Range (all channels) 4-9
CH 1 to CH 2 Signal Delay Match 4-10
CH 1 to CH 4 Signal Delay Match 4-10
CH 3 to CH 4 Signal Delay Match 4-10
CH 1 and CH 2 Vertical Bandwidth 4-10
CH 3 and CH 4 Vertical Bandwidth 4-11
CH 1 and CH 2 Aberrations . 4-11
SCOPE BW (Bandwidth Limit) Accuracy 4-11
Common-mode Rejection Ratio 4-12
Channel Isolation 4-12

TABLE OF CONTENTS (cont)

Page

AC-Coupled Lower -3 dB Point 4-13
Vertical ALT and CHOP Modes 4-13
BEAM FIND Functional Check 4-13
A and B Trace Separation 4-13
TRIGGERING 4-14
500 Hz Trigger Sensitivity 4-14
500 kHz Trigger Sensitivity 4-15
25 MHz Trigger Sensitivity 4-15
100 MHz Trigger Sensitivity 4-15
100 MHz NOISE REJ Trigger Sensitivity 4-16
Single Sweep Mode 4-16
Trigger LEVEL Control Range 4-16
TV Field Trigger Sensitivity 4-17
TV Line Trigger Sensitivity 4-17
Line Trigger Functional Check 4-17
HORIZONTAL 4-18
A and B Sweep Length 4-18
Horizontal POSITION Range 4-18
VAR SEC/DIV Range 4-18
Magnifier Registration 4-19
A and B Timing Accuracy and Linearity 4-19
A and B Magnified Timing Accuracy 4-19
Delay Time Jitter 4-20
Delay Time Accuracy 4-21

Page

Delay Time Position Range 4-21
X-Axis Gain Accuracy 4-21
X-Y Phase Difference 4-22
X-Axis Bandwidth 4-22
TIME AND CURSORS MEASUREMENTS 4-23
|← SEC →| and |← 1/SEC →| Cursor Accuracy 4-23
Delta Time Accuracy 4-23
|← PHASE →| Cursor Accuracy 4-24
|← VOLTS →| Cursor Accuracy 4-24
⫽ VOLTS →| Cursor Accuracy 4-24
Tracking Cursors Position Accuracy 4-24
CH1/CH2 VOLTMETER MEASUREMENTS 4-25
DC Volts Accuracy 4-25
DC Volts Normal Mode Rejection Ratio 4-25
+Peak, -Peak, Peak-to-Peak Volts Accuracy 4-26
25 MHz +Peak, -Peak, and Peak-to-Peak Volts Accuracy 4-26
100 MHz +Peak, -Peak, and Peak-to-Peak Volts Accuracy 4-26
Gated Volts Accuracy 4-26
EXTERNAL Z-AXIS, PROBE ADJUST AND FRONT-PANEL SETUP FUNCTIONS 4-28
Check External Z-Axis Input 4-28
PROBE ADJUST Output 4-28
Run MAKE FACTORY SETTINGS Routine 4-28

TABLE OF CONTENTS (cont)

Page

Section 5 ADJUSTMENT PROCEDURE

INTRODUCTION 5-1
PURPOSE 5-1
TEST EQUIPMENT REQUIRED 5-1
LIMITS AND TOLERANCES 5-1
PARTIAL PROCEDURES 5-1
INTERNAL ADJUSTMENTS AND ADJUSTMENT INTERACTION . . . 5-1
PREPARATION FOR ADJUSTMENT 5-3
INDEX TO ADJUSTMENT PROCEDURE 5-3
POWER SUPPLY, DISPLAY, AND Z-AXIS 5-4
INITIAL CONTROL SETTINGS 5-4
PROCEDURE 5-4
Power Supply DC Levels (R2252) 5-4
Grid Bias (R2719) 5-5
Astigmatism (R2788) 5-5
Trace Rotation (Front Panel) . . 5-5
Geometry (R2784) 5-5
Z-Axis Response (C2704) on instruments with serial numbers of below B110100 for the 2246 MOD A or below B710100 for the 2246 1Y 5-5
Readout Jitter (R724) 5-6
VERTICAL 5-7
INITIAL CONTROL SETTINGS 5-7
PROCEDURE 5-7
Vertical Output Gain (R703) and Readout Vertical Centering (R260) 5-7
CH 1 Step Balance (R12) 5-7
CH 2 Step Balance (R22) 5-8

Page

CH 3 Step Balance (R141) . . . 5-8
CH 4 Step Balance (R161) . . . 5-8
CH 1 MF/LF Gain (R13) and Compensation (C1) 5-8
CH 1 Input Capacitance (C114) 5-8
CH 1 Input Compensation X10 (C11) 5-8
CH 1 Input Compensation X100 (C10) 5-8
CH 1 Gain (R211) 5-8
CH 2 MF/LF Gain (R23) and Compensation (C2) 5-8
CH 2 Input Capacitance (C124) 5-9
CH 2 Input Compensation X10 (C21) 5-9
CH 2 Input Compensation X100 (C20) 5-9
CH 2 Gain (R221) 5-9
CH 3 MF/LF Compensation (C134) 5-9
CH 3 Gain (R231) 5-9
CH 4 MF/LF Compensation (C154) 5-9
CH 4 Gain (R241) 5-9
Delay-line HF Compensation (R272, R273, R275, C274, C273) 5-10
CH 3 HF Compensation (C138) 5-10
CH 4 HF Compensation (C158) 5-10
CH 1 and CH 2 Bandwidth Check 5-10
CH 3 and CH 4 Bandwidth Check 5-11
HORIZONTAL 5-12
INITIAL CONTROL SETTINGS 5-12
PROCEDURE 5-12
Horizontal X1 Gain (Timing) (R826) 5-12

Horizontal X10 Gain (Timing) (R825) 5-12
Readout Horizontal Gain (R823) and MAG Registration (R809) . 5-12
A 0.5 µs Timing (C314) 5-13
B 0.5 µs Timing (C329) 5-13
2-5 ns Timing (C807, C814) . 5-13
X Gain (R827) 5-13
MEASUREMENT BANDWIDTH AND SELF CHARACTERIZATION 5-14
INITIAL CONTROL SETTINGS 5-14
PROCEDURE 5-14
Volts Cal (R920) 5-14
B Trigger Bandwidth (R455) . . 5-14
Self Characterization 5-14

Section 6 MAINTENANCE

STATIC-SENSITIVE COMPONENTS 6-1
PREVENTIVE MAINTENANCE 6-2
INTRODUCTION 6-2
INSPECTION AND CLEANING 6-2
LUBRICATION 6-4
SEMICONDUCTOR CHECKS 6-4
PERIODIC READJUSTMENT 6-4
TROUBLESHOOTING 6-5
INTRODUCTION 6-5
TROUBLESHOOTING AIDS 6-5
TROUBLESHOOTING EQUIPMENT 6-6
TROUBLESHOOTING TECHNIQUES 6-6
INTERNAL TESTING CAPABILITIES 6-10
SERVICE MODE 6-11
TROUBLESHOOTING HINTS BY DIAGRAM 6-19
TROUBLESHOOTING MEASUREMENT ERRORS 6-25
CORRECTIVE MAINTENANCE . . . 6-34
INTRODUCTION 6-34
MAINTENANCE PRECAUTIONS 6-34
OBTAINING REPLACEMENT PARTS 6-34
REPACKAGING FOR SHIPMENT 6-35
MAINTENANCE AIDS 6-35
INTERCONNECTIONS 6-35
BATTERY 6-37
TRANSISTORS AND INTEGRATED CIRCUITS 6-37
SOLDERING TECHNIQUES . . . 6-37
REMOVAL AND REPLACEMENT INSTRUCTIONS 6-38

Section 7 OPTIONS

INTRODUCTION 7-1
INTERNATIONAL POWER CORDS 7-1
OPTION 1R RACKMOUNTED INSTRUMENT 7-1

Section 8 REPLACEABLE ELECTRICAL PARTS

Section 9 DIAGRAMS

Section 10 REPLACEABLE MECHANICAL PARTS

CHANGE INFORMATION

LIST OF ILLUSTRATIONS

Figure		Page
	The 2246 1Y and Mod A Portable Oscilloscope	x
1-1	Maximum input voltage vs frequency derating curve for the CH 1, CH 2, CH 3, or CH 4 input connectors	1-14
1-2	Dimensional outline drawing, standard cabinet	1-20
1-3	Dimensional outline drawing, rackmount cabinet	1-21
2-1	Optional power cords	2-1
3-1	Display Sequencer IC (SLIC, U600) pin-out diagram	3-16
3-2	Readout interface relative signal timing	3-25
3-3	Trigger Logic IC (FLIC, U602) pin-out diagram	3-26
3-4	Simplified Sweep Circuit	3-32
3-5	A Sweep Start circuit waveforms	3-36
3-6	Simplified diagram of the DC Restorer circuitry	3-40
3-7	Display addresses	3-48
3-8	Character pixel arrangement	3-50
3-9	Power Supply block diagram	3-54
3-10	Preregulator switching waveforms	3-56
5-1	Areas of waveform affected by HF compensation	5-10
5-2	2-5 ns Timing	5-13
6-1	Power-on test failure codes	6-10
6-2	Initial SERVICE MENU	6-11
6-3	SERVICE MENU with DIAGNOSE choice selected	6-12
6-4	Main board removal	6-44
6-5	Delay-line connections to top of Main board	6-45
9-1	Color codes for resistors	
9-2	Semiconductor lead configurations	
9-3	Locating components on schematic diagrams and circuit board illustrations	
9-4	Simplified 2246 1Y and 2246 Mod A block diagram	
9-5a	Detailed 2246 1Y or 2246 Mod A block diagram—part 1	
9-5b	Detailed 2246 1Y or 2246 Mod A block diagram—part 2	
9-6a	A10-Main board for SN B715000 and above (2246 1Y), and B120000 and above (2246 Mod A)	
9-6b	A10-Main board for SN B710100 to B714999 (2246 1Y), and SN B110100 to B119999 (2246 Mod A)	
9-6c	A10-Main board for SN B710099 and below (2246 1Y), and B110099 and below (2246 Mod A)	
9-7	A9-2 mV Bandwidth board for SN B700100 to B714999 (2246 1Y), and SN B100100 to B119999 (2246 Mod A)	
9-8	Hybrid pin identifiers	
9-9	A8—CRT Control board	
9-10	A16—Processor board	
9-11	A14—Switch board	
9-12	A12—Potentiometer board	
9-13	A18—Power Supply board	
9-14	A10—Main board adjustment locations	

LIST OF TABLES

Table		Page
1-1	Electrical Characteristics	1-3
1-2	Environmental Characteristics	1-15
1-3	Mechanical Characteristics	1-17
3-1	Shift Register 0 Bit Assignment	3-7
3-2	Input Coupling Control Bit States	3-8
3-3	CH 1 and CH 2 Attenuator and Gain Control Bit States	3-9
3-4	CH 2 INVERT Control Bit	3-9
3-5	CH 3 and CH 4 Gain Control Bit	3-10
3-6	Trigger Selection Logic	3-13
3-7	Display Sequencer (U600) Control Bit Assignments	3-18
3-8	A Trigger Source Select Bits	3-19
3-9	Horizontal Display Mode Select Bits	3-19
3-10	Shift Register 1 Control Bit Data	3-20
3-11	Trigger Source Select	3-21
3-12	Vertical MODE Select	3-21
3-13	Horizontal MODE Select	3-21
3-14	Holdoff Counter Encoding	3-22
3-15	Display Sequencer Channel Select Logic Bits	3-23
3-16	Horizontal and Vertical Display Response	3-24
3-17	Trigger Logic IC Addressing Logic	3-27
3-18	Control Register Signal-bit Names	3-28
3-19	Delay Mode Selection Control Bits	3-28
3-20	Peak Volts Detection Mode Logic	3-28
3-21	Z-Axis Switching Logic	3-30
3-22	A Sweep Timing Selections	3-34
3-23	B Sweep Timing Selections	3-35
3-24	HD0 and HD1 Logic	3-37
3-25	Front-Panel Multiplexer Channel Select Bits	3-41
3-26	Measurement Processor Signals	3-44
3-27	Position Enable Bit Assignment	3-49
3-28	Field and Mixer Attribute Bit Assignment	3-50
3-29	Display Possibilities	3-51
3-30	Possible Signal Conditions to U2416	3-51
4-1	Test Equipment Required	4-2
4-2	Signal-to-Graticule Accuracy	4-8
4-3	Settings for Timing Accuracy Checks	4-20
4-4	Delay Time Accuracy	4-21
5-1	Adjustment Interactions	5-2
5-2	Power Supply Voltage Limits	5-5
6-1	Relative Susceptibility to Static-Discharge Damage	6-1
6-2	External Inspection Checklist	6-3
6-3	Internal Inspection Checklist	6-3
6-4	Power Supply Voltage and Ripple Limits	6-8
6-5	SERVICE MENU Selections	6-12
6-6	DIAGNOSE ROUTINES	6-16
6-7	Horizontal Display State Logic	6-22
6-8	Measurement Processor I/O Memory Map	6-23
6-9	Measurement Error Troubleshooting Hints	6-26
6-10	Maintenance Aids	6-36
9-1	Signal Line Locations	

OPERATORS SAFETY SUMMARY

The safety information in this summary is for operating personnel. Warnings and cautions will also be found throughout the manual where they apply.

Terms in this Manual

CAUTION statements identify conditions or practices that could result in damage to the equipment or other property.

WARNING statements identify conditions or practices that could result in personal injury or loss of life.

Terms as Marked on Equipment

CAUTION indicates a personal injury hazard not immediately accessible as one reads the markings, or a hazard to property, including the equipment itself.

DANGER indicates a personal injury hazard immediately accessible as one reads the marking.

Symbols in this Manual

This symbol indicates where applicable cautionary or other information is to be found. For maximum input voltage see Table 1–1.

Symbols as Marked on Equipment

DANGER—High voltage.

Protective ground (earth) terminal.

ATTENTION—Refer to manual.

Power Source

This product is intended to operate from a power source that does not apply more than 250 V rms between the supply conductors or between either supply conductor and ground. A protective ground connection, by way of the grounding conductor in the power cord, is essential for safe operation.

Grounding the Product

This product is grounded through the grounding conductor of the power cord. To avoid electrical shock, plug the power cord into a properly wired receptacle before making any connections to the product input or output terminals. A protective ground connection, by way of the grounding conductor in the power cord, is essential for safe operation.

Danger Arising From Loss of Ground

Upon loss of the protective-ground connection, all accessible conductive parts, including knobs and controls that may appear to be insulating, can render an electric shock.

Use the Proper Power Cord

Use only the power cord and connector specified for your product.

Use only a power cord that is in good condition.

For detailed information on power cords and connectors, see Figure 2–2.

Use the Proper Fuse

To avoid fire hazard, use only a fuse of the correct type, voltage rating and current rating as specified in the parts list for your product.

Do Not Operate in an Explosive Atmosphere

To avoid explosion, do not operate this instrument in an explosive atmosphere unless it has been specifically certified for such operation.

Do Not Remove Covers or Panels

To avoid personal injury, do not remove the product covers or panels. Do not operate the product without the covers and panels properly installed.

SERVICING SAFETY SUMMARY

FOR QUALIFIED SERVICE PERSONNEL ONLY

Refer also to the preceding Operators Safety Summary

Do Not Service Alone

Do not perform internal service or adjustment of this product unless another person capable of rendering first aid and resuscitation is present.

Use Care When Servicing With Power On

Dangerous voltages exist at several points in this product. To avoid personal injury, do not touch exposed connections or components while power is on.

Disconnect power before removing protective panels, soldering, or replacing components.

Power Source

This product is intended to operate from a power source that does not apply more than 250 volts rms between the supply conductors or between either supply conductor and ground. A protective ground connection by way of the grounding connector in the power cord is essential for safe operation.

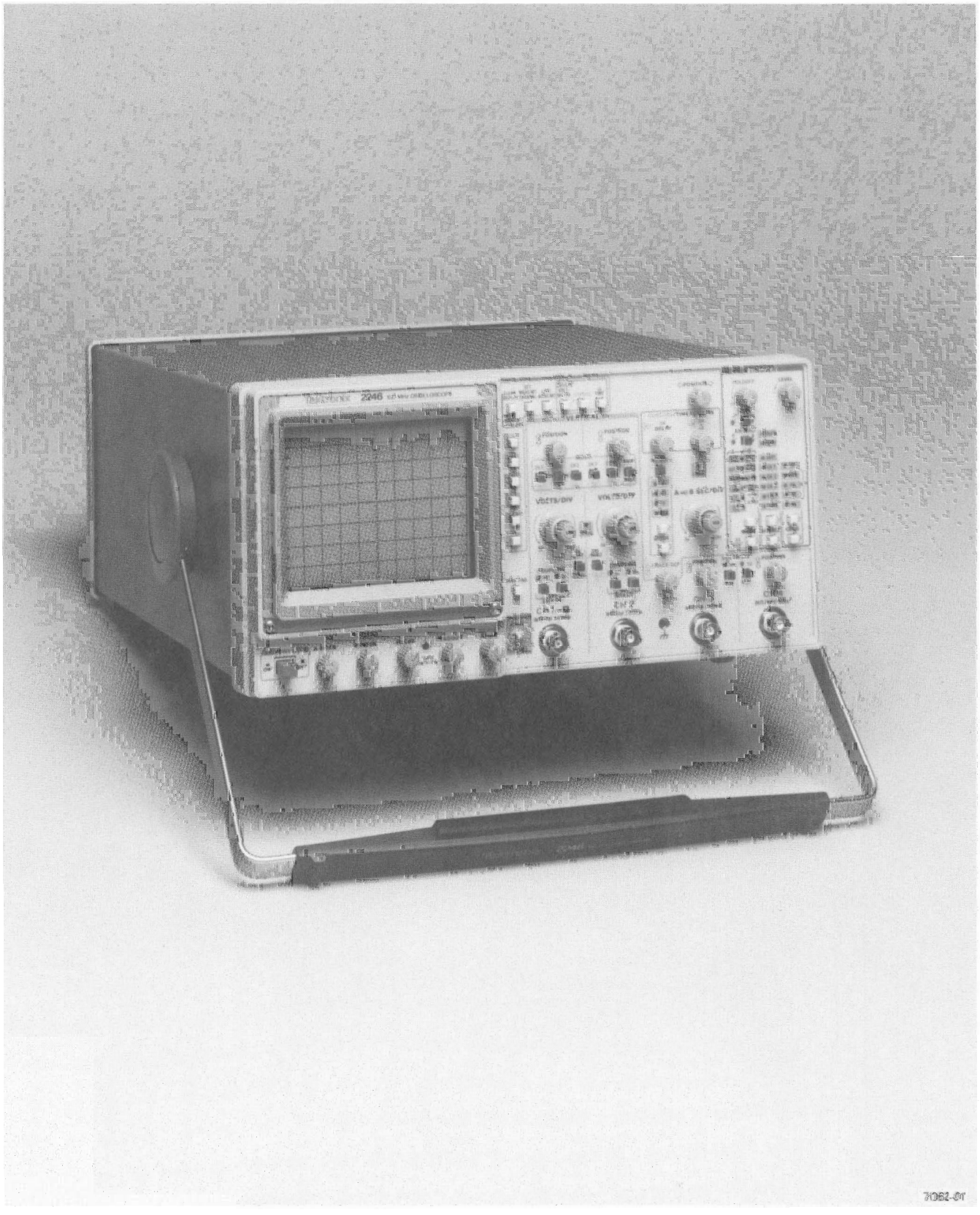

The 2246 1Y or 2246 Mod A Portable Oscilloscope.

SPECIFICATION

INTRODUCTION

The 2246 1Y and 2246 Mod A are 100 MHz, four-channel, dual-sweep, portable oscilloscopes for general-purpose use. A microprocessor-based operating system controls most of the functions in each instrument, including a fully integrated menu-driven voltage and time measurement system with SmartCursors™. A menu-driven service mode provides for configuring of certain menu and readout displays, internal calibration, and servicing diagnostics. The instruments include additional EMI shielding. (See Table 1-2, Environmental Characteristics, for more information.)

The vertical deflection system has four input channels. Two channels have 11 basic deflection factors from 2 mV to 5 V per division, and two channels have two basic deflection factors of 0.1 V and 0.5 V per division. Basic deflection factors can be extended with attenuator probes. VOLTS/DIV readouts are switched to display the correct vertical scale factors when properly coded probes are connected to the vertical input connectors.

The horizontal deflection system provides single, dual, or delayed sweeps from 0.5 s to 20 ns per division (delayed sweep, 5 ms to 20 ns per division). The trigger system provides stable triggering over the full bandwidth of the vertical deflection system.

Alphanumeric crt readouts of the vertical and horizontal scale factors are displayed at the bottom of the screen. On-screen vertical and horizontal cursors provide accurate voltage, time, frequency, and phase measurements; measurement values are displayed at the top of the crt.

The measurement features include voltage measurements for +Peak, -Peak, Peak-to-Peak, and average DC, or positionable cursors for measuring voltage difference, time difference, frequency, and phase. SmartCursors™ that visually track voltage measurements, trigger levels, and ground can be placed on displayed waveforms. Delay-time and delta-delay measurements for time, frequency, and phase are available in ALT and B Horizontal Modes.

STANDARD ACCESSORIES

The following items are standard accessories shipped with the 2246 1Y and 2246 Mod A instrument:

- 2 Probes, 10X, 2 meter, with accessories
- 1 Probe, 1X, 2 meter, with accessories
- 1 Power cord
- 1 Power cord clamp
- 1 CRT implosion shield, blue plastic (installed)
- 1 Fuse, 2A, 250 V, slow-blow
- 1 Attaching accessory pouch
- 1 Accessory pouch, ziploc
- 1 Front cover

The following items are standard accessories shipped with the 2246 1Y instrument:

- 2 Operators manuals
- 2 Service manuals
- 2 Reference guides

The following items are standard accessories shipped with the 2246 Mod A instrument:

- 1 Operators manual
- 1 Reference guide

RECOMMENDED RECALIBRATION SCHEDULE

To ensure accurate measurements, check the performance of this instrument every 2000 hours of operation, or, if used infrequently, once each year. Replacement of components in the instrument may also necessitate readjustment of the affected circuits.

NOTE

The silver-oxide batteries used in the 2246 1Y (instruments serial numbered B714999 and below) MUST BE REPLACED AT LEAST EVERY 12 MONTHS to ensure proper operation of the instrument.

PERFORMANCE CONDITIONS

The electrical characteristics given in Table 1–1 are valid when the instrument has been adjusted at an ambient temperature between +20°C and +30°C, has had a warm–up period of at least 20 minutes, and is operating at an ambient temperature between –10°C and +55°C (unless otherwise noted).

Items listed in the Performance Requirements column are verifiable qualitative or quantitative limits that define the measurement capabilities of the instrument.

Environmental characteristics are given in Table 1–2. This instrument meets the requirements of MIL–T–28800D, for Type III, Class 3, Style D equipment, as described in this section.

Physical characteristics of the instrument are listed in Table 1–3.

Table 1-1
Electrical Characteristics

Characteristics	Performance Requirements
VERTICAL DEFLECTION SYSTEM — CH 1 AND CH 2	
Deflection Factor	
Range	2 mV/div to 5 V/div in 1-2-5 sequence.[a]
Accuracy (includes ADD MODE and CH 2 INVERT)	
15°C to 35°C	Within ± 2%.
−10°C to 15°C and 35°C to 55°C	Within ± 3%.[a]
Variable Range	Increases deflection factor by at least 2.5:1.
Frequency Response (−3 dB bandwidth)	
2 mV/div to 5 V/div	Dc to 100 MHz (at the input BNC and with a 10X probe).
AC Coupled Lower −3 dB Point	
1X Probe	10 Hz or less.
10X Probe	1 Hz or less.
Step Response (5-division step)	
Rise Time	
2 mV/div to 5 V/div	3.5 ns or less (calculated).[a]
Aberrations	
Positive-Going Step	
5 mV/div to 0.5 V/div	+5%, −5%, 5% p-p or less.
1 V/div to 5 V/div	+10%, −10%, 10% p-p or less.
Negative-Going Step	Add 2% to all positive-going step specifications.
Position Effect	Aberrations measured anywhere on screen do not exceed those measured at center screen by more than 1%.
Temperature Effect	Add 0.15% per °C above or below 25°C.

[a] Performance Requirement not checked in manual.

Table 1-1 (cont)
Electrical Characteristics

Characteristics	Performance Requirements
Delay Match (CH 1 to CH 2)	Less than 400 ps difference.
Common Mode Rejection Ratio (CMRR)	At least 25:1 up to 10 MHz and at least 10:1 up to 100 MHz for signals of eight divisions or less with VOLTS/DIV VAR adjusted for best CMRR at 50 kHz.
Channel Isolation (attenuation of deselected channel)	
2 mV/Div to 0.5 V/Div	10 MHz: 50 dB (≈ 316:1) or more; 100 MHz: 34 dB (≈ 50:1) or more
	Channel isolation tested with eight-division input signal.
Trace Shift as VAR VOLTS/DIV is Turned	1 division or less.
Invert Trace Shift	1 division or less.
Trace Shift Between VOLTS/DIV Switch Positions	0.2 division or less.
Trace Shift Between GND and DC input Coupling	
-10 °C to 35 °C	Less than 0.5 mV.
35° C to 55 °C	Less than 2 mV.[a]
Input Characteristics	
Resistance	1 MΩ ±2%.[a]
Capacitance	20 pF ±2 pF.[a]
Capacitance Match Between Any Two VOLTS/DIV Settings	±0.5 pF.
Maximum Input Volts ⚠	400 V (dc + peak ac); 800 V p-p at 10 kHz or less; 800 V p-p at 10 kHz or less; 5 V (dc + peak ac) at 100 MHz or less.[a]

[a] Performance Requirement not checked in manual.

Table 1-1 (cont)
Electrical Characteristics

Characteristics	Performance Requirements
VERTICAL DEFLECTION SYSTEM — CH 3 AND CH 4	
Deflection Factor	
Range	0.1 V per division and 0.5 V per division.[a]
Accuracy	
15°C to 35°C	Within ±2%.
-10°C to 55°C	Within ±3%.
Frequency Response (-3 dB bandwidth)	Dc to 100 MHz (at the input BNC and with a 10X probe).
Step Response (5-division step) Rise Time	3.5 ns or less (calculated).[a]
Delay Match (CH 3 to CH 4)	Less than 400 ps difference.
Trace Shift Between VOLTS/DIV Settings	1 division or less.
Channel Isolation (attenuation of deselected channel)	34 dB or more at 100 MHz. Channel isolation tested with eight-division input signal.
Input Characteristics	
Resistance	1 MΩ ±2%.[a]
Capacitance	20 pF ±2 pF.[a]
Maximum Input Volts ⚠	400 V (dc + peak ac); 800 V p-p at 10 kHz or less; 800 V p-p at 10 kHz or less; 5 V (dc + peak ac) at 100 MHz or less.[a]

[a] Performance Requirement not checked in manual.

Table 1-1 (cont)
Electrical Characteristics

Characteristics	Performance Requirements
VERTICAL DEFLECTION SYSTEM — ALL CHANNELS	
Bandwidth Limit (-3 dB bandwidth)	20 MHz ±25%.
Low Frequency Linearity (Relative to center screen)	Within ±5%. Linearity is measured by positioning a two-division test signal anywhere on screen and noting the amplitude change.
Position Range	At least ±10 divisions form graticule center.
TRACE SEP Control Position Range	At least ±4 divisions.
CHOP Mode Clock Rate	625 kHz ±10%.[a]
Delay Match (CH 1 or CH 2 to CH 3 or CH 4)	Less than 800ps difference.
HORIZONTAL DEFLECTION SYSTEM	
Sweep Range	
A Sweep	0.5 s/div to 20 ns/div in a 1-2-5 sequence.[a] X10 magnifier extends maximum sweep speed to 2 ns/div.
B Sweep	5.0 ms/div to 20 ns/div in a 1-2-5 sequence.[a] X10 magnifier extends maximum sweep speed to 2 ns/div.
Accuracy	

	Unmagnified	Magnified
15°C to 35°C	±2%	±3%
-10°C to 15°C and 35°C to 55°C	±3%	±4%

Sweep Accuracy applies over the center eight divisions. Excludes the first 1/4 division or 25 ns from the start of the magnified sweep and anything beyond the 100th magnified division.

[a] Performance Requirement not checked in manual.

Table 1-1 (cont)
Electrical Characteristics

Characteristics	Performance Requirements
Sweep Linearity	± 5%. Sweep Linearity applies over the center eight divisions of an unmagnified sweep. Excludes the first 1/4 division or 25 ns from the start of the sweep. Sweep linearity is determined by the error of a single time mark relative to two adjacent time marks spaced at one time mark per division.
POSITION Control Range	
Normal Displays	Able to move the start of the sweep to the right of the center vertical graticule; able to move a time mark corresponding to the end of the tenth division of an unmagnified sweep to the left of the center graticule.
X-Y Displays	At least ±13 divisions.[a]
X10 Magnifier	Expands the normal sweep by ten times around that portion of the sweep positioned at the center vertical graticule line.[a]
Registration (X10 to X1)	2 divisions or less shift.
Variable Control Range	Continuously variable between calibrated SEC/DIV settings. Extends both the A and B sweep time per division by at least a factor of 2.5.
Sweep Length	Greater than 10 divisions.
Delay Time	
Delay Control Range	Less than 0.1 division to 10 times the A SEC/DIV switch setting. Maximum value does not exceed end of the A sweep.
Jitter	1 part in 20,000, or less, peak-to-peak, during a two-second time interval.
Delta Time	
Delta Control Range	From 0.5 division or less to the right of setting of DELAY control to within 1.5 divisions of the end of the A sweep.

[a] Performance Requirement not checked in manual.

Table 1-1 (cont)
Electrical Characteristics

Characteristics	Performance Requirements
A AND B TRIGGER	
Sensitivity—CH 1 through CH 4: AUTO LEVEL, NORM AND SINGLE SEQUENCE	Trigger sensitivity is defined as the minimum peak-to-peak sine-wave trigger signal amplitude required to show the test signal with horizontal jitter of less than 3.0% of one period (p-p viewed over two seconds).
COUPLING	
DC	0.35 division from dc to 25 MHz, increasing to 1.0 division at 100 MHz.
NOISE REJECT	1.4 division from dc to 25 MHz; increasing to 2.2 division at 100 MHz. 0.5 division or less will not trigger.
HF REJECT	0.35 division from dc to 50 kHz; attenuates signals above upper -3 dB cutoff frequency of 70 kHz.
LF REJECT	0.35 division from 100 kHz to 25 MHz, increasing to 1.0 division at 100 MHz attenuates signals below the lower -3 dB cutoff frequency of 50 kHz.
AC	0.35 division from 50 Hz to 25 MHz, increasing to 1.0 division at 100 MHz; attenuates signals below the lower -3 dB cutoff frequency of 10 Hz.
TV LINE, TV FIELD	0.5 division of composite sync will achieve a stable display.
AUTO LEVEL and AUTO MODE Trigger Low-Frequency Limit	10 Hz.
LEVEL Control Range	±20 divisions referred to the appropriate vertical input. This range is sufficient to allow triggering at any point on a displayed waveform for all modes except "ADD". In ADD, the combined range of the two position controls exceeds the trigger level range, making it possible (though unlikely) to pull a signal on screen for display but fail to trigger to it due to insufficient trigger level range.

Table 1-1 (cont)
Electrical Characteristics

Characteristics	Performance Requirements
TRIGGER LEVEL READOUT Accuracy	± (0.3% of reading + 10% of one vertical division).
HOLDOFF Control Range	Increases A Sweep holdoff time by at least a factor of 2.[a]
FUNCTIONS WITH DIGITAL READOUT	
Specifications for functions with digital readout are valid only when the ambient temperature is within ±10°C of the temperature at the time of the last SELF CAL. For maximum performance, a recent SELF CAL is recommended.	
VOLTMETER FUNCTIONS	
DC VOLTS	
Accuracy	± (0.5% of reading + 2% of the VOLTS/DIV setting + 250 μV).
Normal Mode Rejection Ratio	Greater than 50 dB at 50 or 60 Hz.
PLUS or MINUS Peak	
Accuracy—Full Bandwidth	
25 Hz to 25 MHz	± (2.0% of reading + 15% of one vertical division + 1 mV).
Greater Than 25 MHz to 100 MHz (90 MHz at 35° C to 55° C)	+0.5 dB/−3 dB ±1 mV. Follows the trigger system frequency response curve.
Accuracy—Bandwidth Limited (25 Hz to 10 MHz)	± (2.0% of reading + 10% of one vertical division + 0.3 mV).
Gated Region Minimum Width (when gated)	(0.2 division + 50 ns) or less.

[a] Performance Requirement not checked in manual.

Table 1-1 (cont)
Electrical Characteristics

Characteristics	Performance Requirements
PK-PK VOLTS	
Accuracy—Full Bandwidth	
25 Hz to 25 MHz	± (2.0% of reading + 15% of one vertical division + 1.5 mV).
Greater Than 25 MHz to 100 MHz (90 MHz at 35° C to 55° C)	+0.5 dB/-3 dB ±1.5 mV. Follows the trigger system frequency response curve.
Accuracy—Bandwidth Limited	
25 Hz to 10 MHz	± (2.0% of reading + 10% of one vertical division + 0.5 mV).
Gated Region Minimum Width (when gated)	(0.2 division + 50 ns) or less.
CURSOR FUNCTIONS	
⊢ SEC ⊣ (manually position cursors)	
Accuracy	
0.5 s/div to 0.1 μs/div	± (0.5% of reading + 2% of the SEC/DIV setting).
50 ns/div to 20 ns/div	± (1.2% of reading + 2% of the SEC/DIV setting).
⊢ 1/SEC ⊣ (manually position cursors)	
Accuracy	Readout calculated from ⊢ SEC ⊣ cursor positions.
⊢ VOLTS ⊣ (manually position cursors)	
Accuracy	± (0.5% of reading + 2% of the VOLTS/DIV setting + high-frequency display errors).
⏚ VOLTS ⊣ (manually position cursors)	
Accuracy	± (0.5% of reading + 2% of the VOLTS/DIV setting + high-frequency display errors).

Table 1-1 (cont)
Electrical Characteristics

Characteristics	Performance Requirements
⊢ PHASE ⊣ (manually positioned cursors)	
Accuracy	Readout calculated from ⊢ SEC ⊣ cursor positions.
TRACK MEASUREMENT	
Position Accuracy (Cursor position on waveform versus digitally displayed measurement value)	Within ± 0.05 vertical division.
TRACK TRIG LEVEL	
Position Accuracy (Cursor position on waveform versus digitally displayed measurement value)	Within ± 0.05 vertical division.
TRACK GROUND	
Position Accuracy (Cursor position on waveform versus baseline displayed with grounded input)	Within ± 0.05 vertical division.
DELTA TIME FUNCTIONS	
DELTA TIME Accuracy	
15° C to 35° C	±(1.0% of reading + 1.0% of one division of the A Sweep).
−10° C to 15° C and 35° C to 55° C	±(2.0% of reading + 1.0% of one division of the A Sweep).
DELTA 1/TIME Accuracy	Readouts calculated using DELTA TIME difference.
DELTA Phase Accuracy	Readouts calculated using DELTA TIME difference.
Delay Accuracy, A Sweep Trigger Point to start of B Sweep	±(0.5% of reading + 5.0% of one division of the A Sweep + 25 ns).

Table 1-1 (cont)
Electrical Characteristics

Characteristics	Performance Requirements
X-Y OPERATION	
Deflection Factors	Same as Vertical deflection system with the VOLTS/DIV variable controls in calibrated detent position.[a]
Accuracy	
Y Axis	
15°C to 35°C	Within ± 3%.
-10°C to 15°C and 35°C to 55°C	Within ± 4%.[a]
X Axis	
15°C to 35°C	Within ± 3%.
-10°C to 15°C and 35°C to 55°C	Within ± 3%.[a]
Horizontal (X-Axis) -3 dB Bandwidth	3 MHz or more.
Phase Match (DC Coupled)	± 3 degrees from dc to 100 kHz.
EXTERNAL Z-AXIS INPUT	
Active Region Lower Threshold (intensity decreases above this voltage)	+1.8 volts or less.
Signal Required to Modulate an A or B Trace of Normal Intensity	+3.8 volts or less (usable frequency: DC - 10 MHz). External Z-Axis signal does not affect the readout or the intensified zone intensity.
Maximum Input Voltage ⚠	30 V (dc + peak ac); 30 V p-p ac at 1 kHz or less.[a]
Input Loading	Represents less than one LSTTL load.[a]
PROBE ADJUST OUTPUT	
Overshoot (rising and falling edge)	0.1% or less.
Output Voltage on PROBE ADJUST Jack	0.5 V ±1% into 1 MΩ load.
Repetition Rate	1 kHz ± 25%.

[a] Performance Requirement not checked in manual.

Table 1-1 (cont)

Electrical Characteristics

Characteristics	Performance Requirements
FRONT PANEL SETUP MEMORY	
Battery Type	
2246 1Y, 2R	
SN B700100-B714999	Two 1.5 V, 43 mAH, silver-oxide button cells in series.[a]
SN B715000 and above	One, dry, 3.0 V, Lithium.[a]
2246 Mod A	One, dry, 3.0 V, Lithium.[a]
Battery Life	
Silver-oxide	At least one year.[a]
Lithium	At least five years.[a] **WARNING**—*To avoid injury, have battery replaced by a qualified service person for proper handling and disposal of Lithium batteries.*
POWER SOURCE	
Line Voltage Range	90 Vac to 250 Vac.[a]
Line Frequency	48 Hz to 445 Hz.[a]
Line Fuse	2 A, 250 V, slow blow.[a]
Maximum Power Consumption	100 Watts (155 VA).[a]
CRT DISPLAY	
Display Area	8 by 10 cm.[a]
Geometry	
Vertical	±1/2 minor (0.1 div) at 8 by 8 cm centered area. ±1 minor (0.2 div) at 8 by 10 cm centered area.
Horizontal	±1/2 minor (0.1 div) at 6 by 10 cm centered area. ±1 minor (0.2 div) at 8 by 10 cm centered area.
Trace Rotation Range	Adequate to align trace with center horizontal graticule line.
Standard Phosphor	P31.[a]
Y-Axis Orthogonality	0.1 division or less, over eight vertical divisions. No adjustment.
Nominal Accelerating Voltage	16 kV.[a]

[a] Performance Requirement not checked in manual.

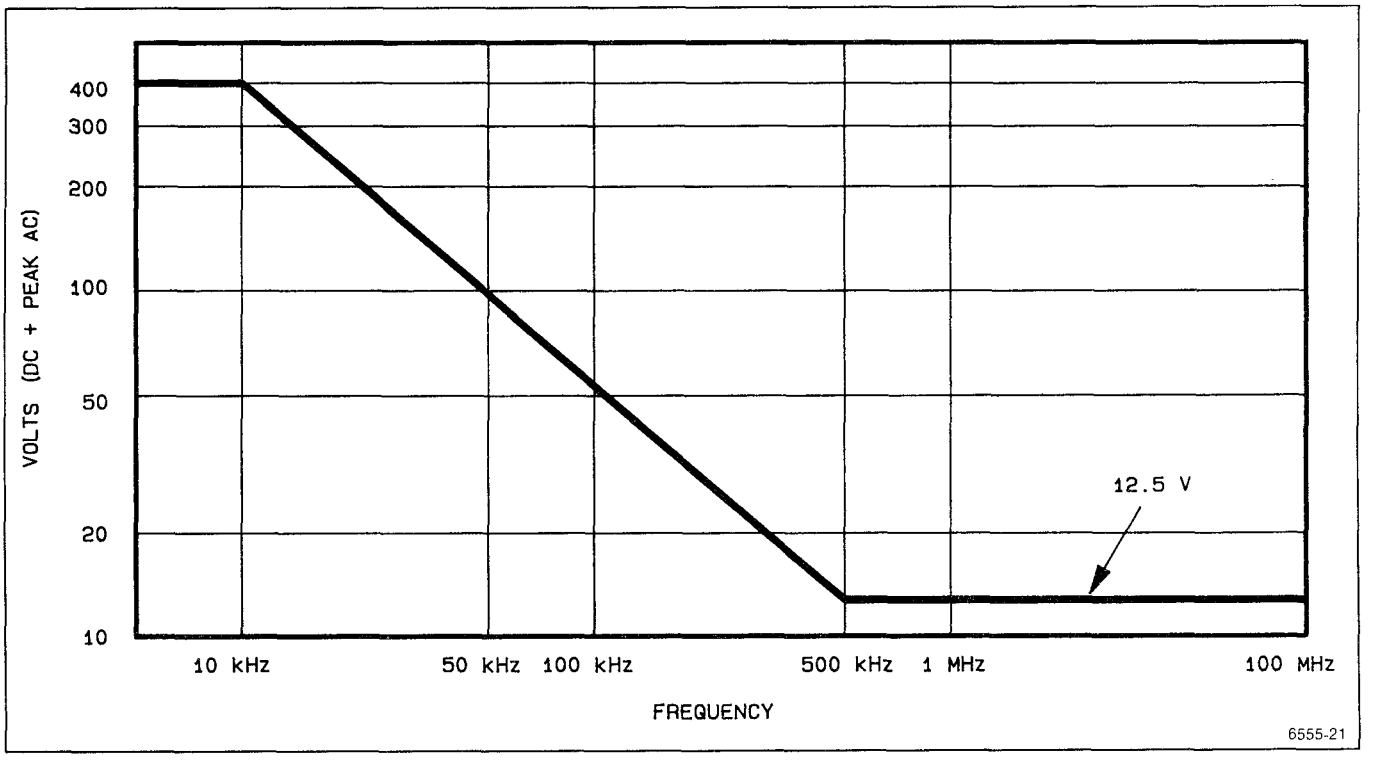

Figure 1–1. Maximum input voltage vs frequency derating curve for the CH 1, CH 2, CH 3, or CH 4 input connectors.

Table 1-2
Environmental Characteristics

Characteristics	Description
	STANDARD INSTRUMENT
Environmental Requirements	Instrument meets or exceeds the environmental requirements of MIL-T-28800D for Type III, Class 3, Style D equipment, as described below.[a]
Temperature	
Operating	-10°C to +55°C (+14°F to +131°F).
Non-operating	-51°C to +71°C (-60°F to +160°F). Tested to MIL-T-28800D paragraphs 4.5.5.1.3 and 4.5.5.1.4, except in 4.5.5.1.3, steps 4 and 5 (-10 °C operating test) are performed ahead of step 2 (-51°C non-operating test). Equipment shall remain off upon return to room ambient during step 6. Excessive condensation shall be removed before operating during step 7.
Altitude	
Operating	To 4,572 m (15,000 ft). Maximum operating temperature decreases 1°C per 1000 ft above 5000 ft.
Non-Operating	To 15,240 m (50,000 ft). Exceeds requirements of MIL-T-28800D, paragraph 4.5.5.2.
Humidity (Operating and Non-operating)	Five cycles (120 hours) referenced to MIL-T-28800D paragraph 4.5.5.1.2.2, for type III, class 3 instruments. Non-operating and operating at 95%, -0% to +2% relative humidity. Operating at +30°C and +55°C for all modes of operation. Non-operating at +30°C to +60°C.
Radiated and conducted Emission required per VDE 0871	Meets Category B.
Electrostatic Discharge	Withstands discharge of up to 20 kV. Test performed with probe containing a 500 pF capacitor with 1 KΩ series resistance charged to the test voltage. Conforms to Tektronix Standard 062-2862-00.

[a] Performance not checked in manual.

Table 1-2 (cont)
Environmental Characteristics

Characteristics	Description
EMI	Meets the following requirements in accordance with MIL-T-28800D and MIL-STD-461C. CE 01:Part 2, narrow band requirements up to 15 kHz. CE 03:Part 4. CS 01:Part 2. CS 02:Part 2. CS 06:Part 5, limited to 300 V. RE 01:Parts 5 and 6, except measured at 12 inches. RE 02:Part 2, full limits to 1 GHz. RS 02:Part 2, part I. RS 02:Part 2, part II, limited to 5 A at 60 Hz. RS 03:Part 2, limited to 1 GHz.
Vibration (operating)	15 minutes along each of 3 major axes at a total displacement of 0.25 inch p-p (4 g at 55 Hz) with frequency varied from 10 Hz to 55 Hz in 1-minute sweeps. Hold from 10 minutes at 55 Hz in each of the three major axes. All major resonances must be above 55 Hz. Meets requirements of MIL-T-28800D, paragraph 4.5.5.3.1.
Bench Handling Test (cabinet on and cabinet off)	Each edge lifted four inches and allowed to free fall onto a solid wooden bench surface. Meets requirements of MIL-T-28800D, paragraph 4.5.5.4.3.
Transportation	
Packaged Vibration Test	Meets the limits of the National Safe Transit Association test procedure 1A-B-1; excursion of 1 inch p-p at 4.63 Hz (1.1 g) for 30 minutes on the bottom and 30 minutes on the side (for a total of 60 minutes).
Package Drop Test	Meets the limits of the National Safe Transit Association test procedure 1A-b-2; 10 drops of 36 inches.

Table 1-3
Mechanical Characteristics

Characteristics	Description
STANDARD INSTRUMENT	
Weight	
With Front Cover, Accessories, and Accessories Pouch (without manual)	8.9 kg (19.6 lb).
With Power Cord	7.9 kg (17.4 lb).
Shipping Weight (Domestic)	11.7 kg (25.8 lb).
Overall Dimensions	See Figure 1-2, Dimensional drawing.
Height	
With Feet and Accessories Pouch (empty)	Approx. 176.5 mm (6.95 in).
Without Accessories Pouch	164 mm (6.46 in).
Width (with handle)	362 mm (14.26 in).
Depth	
With Front Cover on	445.3 mm (17.53 in).
With Handle Extended	521 mm (20.51 in).
Cooling	Forced air circulation; no air filter.
Finish	Tek Blue, pebble-grain finish painted on aluminum cabinet.
Construction	Aluminum alloy chassis. Plastic-laminate front panel.

Table 1–3 (cont)
Mechanical Characteristics

Characteristics	Description
RACKMOUNT INSTRUMENT	
Weight	
With Power Cord	10.0 kg (22.0 lb).
Shipping Weight	
Domestic, includes manual	14.2 kg (31.3 lb).
Overall Dimensions	See Figure 1–3, Dimensional drawing.
Height	
Overall	168 mm (6.6 in).
Center of mounting rail to bottom of cabinet	89 mm (3.5 in).
From cabinet top or bottom to respective front-panel mounting holes	38 mm (1.5 in).
Between front-panel mounting holes	102 mm (4.0 in).
Width	
Overall	483 mm (19.0 in).
Between mounting hole centers	464 mm (18.3 in).
Between outer edges of mounting rails	427 mm (16.8 in).
Between handle centers	450 mm (17.7 in).
Depth	
Overall	516 mm (20.31 in).
Front panel to rear of mounting rail (inside)	465 mm (18.3 in).
Front panel to rear of mounting rail (outside)	472 mm (18.6 in).
Handles	44 mm (1.73 in).

Table 1-3 (cont)
Mechanical Characteristics

Characteristics		Description
Required Clearance dimensions		
	Height	≥178 mm (7 in).
	Width	≥448 mm (17-5/8 in).
	Depth	≥508 mm (20 in).
Cooling		Forced air circulation; no air filter.
Finish		Tek Blue, pebble-grain finish painted on aluminum cabinet.
Construction		Aluminum alloy chassis, front-panel frame, and rear support. Plastic-laminate front panel. Glass-laminate circuit boards.

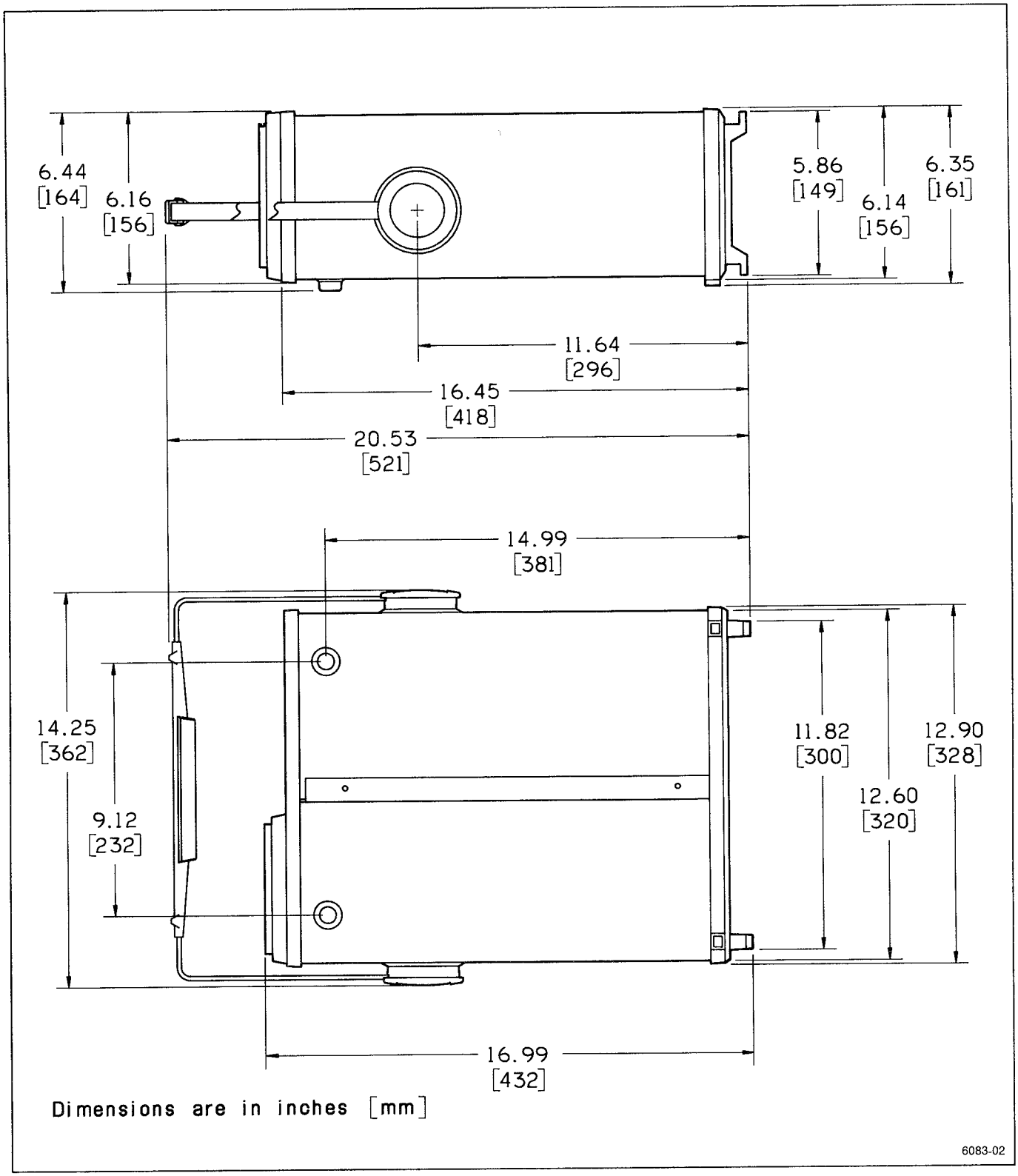

Figure 1–2. Dimensional outline drawing, standard cabinet.

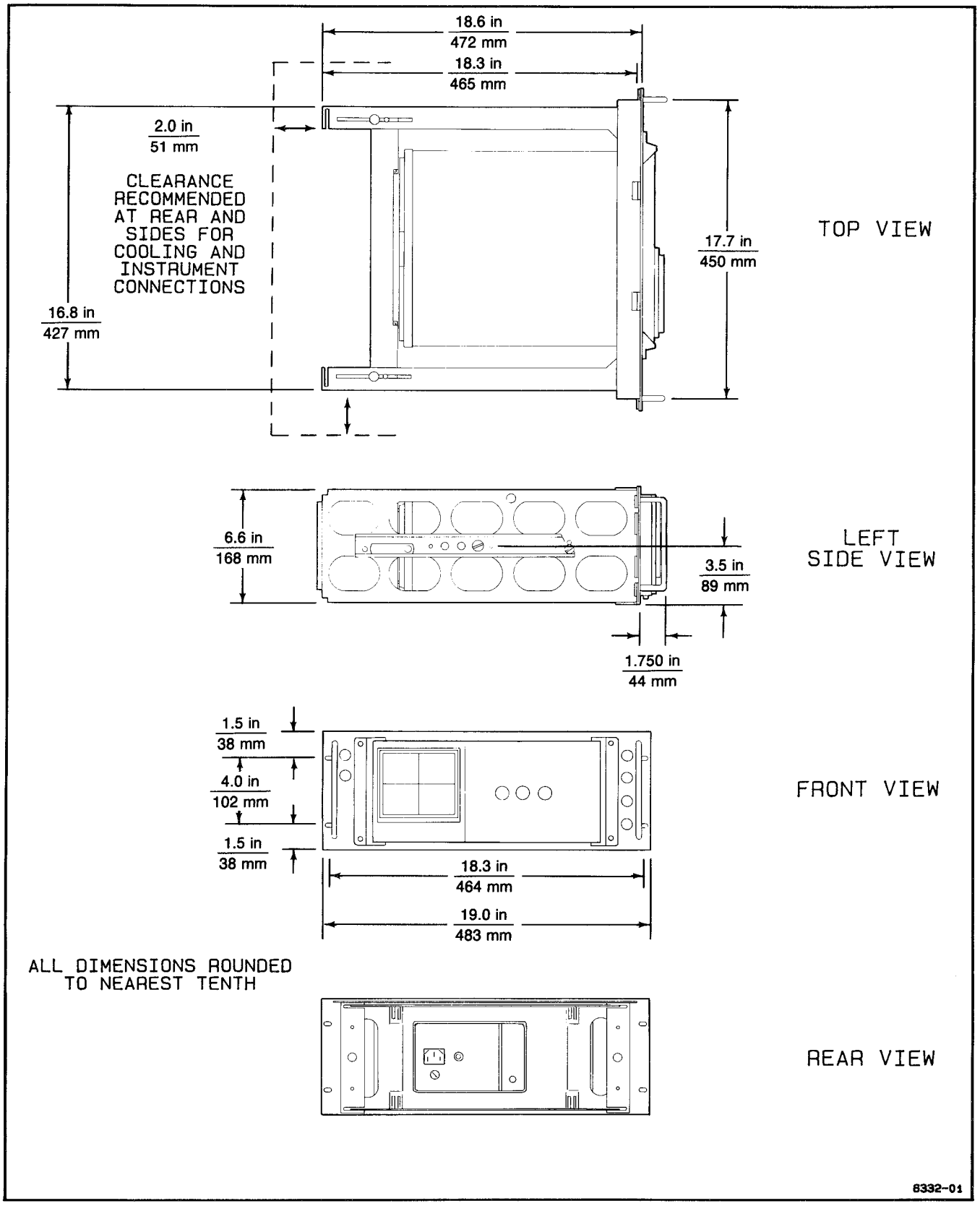

Figure 1-3. Dimensional outline drawing, rackmount cabinet.

PREPARATION FOR USE

SAFETY

This section tells how to prepare for and to proceed with the initial start-up of the TEKTRONIX 2246 1Y or 2246 Mod A Oscilloscope.

Refer to the Safety Summary at the front of this manual for power source, grounding, and other safety considerations pertaining to the use of the instrument. Before connecting the oscilloscope to a power source, read this section and the Safety Summary.

LINE VOLTAGE AND POWER CORD

The 2246 1Y and 2246 Mod A operate on line voltages from 90 to 250 V with line frequencies ranging from 48 to 440 Hz. No line voltage selecting is necessary. The detachable power cord may have to be changed to match the power source outlet (see Figure 2-1).

The detachable three-wire power cord has a three-contact plug for connection to both the power source and the protective ground. The power cord is secured to the rear panel by a securing clamp. The protective ground contact on the plug connects (through the power cord protective grounding conductor) to the accessible metal parts of the instrument. For electrical-shock protection, insert this plug into a power-source outlet that has a properly grounded protective-ground contact.

Instruments are shipped with the required power cord as ordered by the customer (see Figure 2-1). Contact your Tektronix representative or local Tektronix Field Office for additional power-cord information.

Plug Configuration	Option	Power Cord/ Plug Type	Line Voltage	Reference Standards[b]
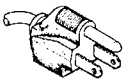	U.S. Std.	U.S. 120V	120V	ANSI C73.11 NEMA 5-15-P IEC 83 UL 198.6
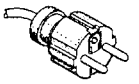	A1	EURO 220V	220V	CEE(7), II, IV, VII IEC 83 IEC 127
	A2	UK[a] 240V	240V	BS 1363 IEC 83 IEC 127
	A3	Australian 240V	240V	AS C112 IEC 127
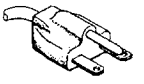	A4	North American 240V	240V	ANSI C73.20 NEMA 6-15-P IEC 83 UL 198.6
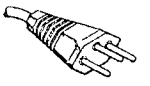	A5	Switzerland 220V	220V	SEV IEC 127

[a] A 6A, type C fuse is also installed inside the plug of the Option A2 power cord.

[b] Reference Standards Abbreviations:

ANSI—American National Standards Institute
AS—Standards Association of Australia
BS—British Standards Institution
CEE—International Commission on Rules for the Approval of Electrical Equipment
IEC—International Electrotechnical Commission
NEMA—National Electrical Manufacturer's Association
SEV—Schweizervischer Elektrotechnischer Verein
UL—Underwriters Laboratories Inc.

Figure 2-1. Optional power cords.

LINE FUSE

CAUTION

The instrument may be damaged if operated with the wrong type and rating line fuse installed.

To verify the proper value of the power-input fuse for the 2246 1Y or 2246 Mod A, use the following procedure.

1. Disconnect the ac-power source from the instrument.
2. Press in the fuse-holder cap with a straight-bladed screwdriver, then release it with a slight counterclockwise rotation.
3. Pull cap (containing fuse) out of fuse holder.
4. Check that the fuse is of the type and rating as specified on the rear panel.
5. If the installed fuse is not of the correct type and rating, replace it with a proper fuse and reinstall the fuse-holder cap.

INSTRUMENT COOLING

You must provide adequate airflow into the instrument to prevent possible damage from overheated components. Before turning on the power, make sure that ventilation holes on the bottom and right side of the cabinet are not blocked. After turning the instrument on, check that air is being exhausted from the right side ventilation holes.

START-UP

When the power is turned on, the instrument performs a self-diagnostic routine. If the instrument fails to come on and operate normally, the Trigger MODE LEDs may be flashing to indicate the circuit location of a start-up error. Also, under certain conditions, the Tektronix Part Number of the device where the error exists may be displayed on the screen. Refer to Troubleshooting in the Maintenance section of this manual for an explanation of the start-up error codes.

When the instrument is turned on, a self-cal routine may run to set the voltage- and timing-measurement constants. During normal operation, the power-on self cal happens only if the stored constants have been lost as the result of a dead memory back-up battery. The instrument may be used with no reduction in the measurement accuracy by running the SELF CAL MEASUREMENTS routine from the SERVICE MENU after the instrument has warmed up for at least 20 minutes.

To run the SELF CAL MEASUREMENTS routine:

Press the top and bottom menu-item select buttons. Select INTERNAL SETTINGS MENU, then SELF CAL MEASUREMENTS. Press RUN to start the routine, then QUIT to return to the normal oscilloscope mode.

DETAILED OPERATING INFORMATION

For operating information for specific instrument functions, refer to the 2246 1Y and 2246 Mod A Operators Manual.

THEORY OF OPERATION

SECTION ORGANIZATION

This section contains general and detailed descriptions of the 2246 1Y and 2246 Mod A Oscilloscope circuitry. The Block Diagram Description describes the general operation of the instrument functional circuits. Each major circuit is explained in detail in the Detailed Circuit Description. Schematic and block diagrams show the circuit components and interconnections between parts of the circuitry. The circuit descriptions are arranged in the same order as the schematic diagrams.

The detailed block diagrams and the schematic diagrams are in the Diagrams section at the rear of this manual. Smaller functional diagrams are in this section near the associated text. The schematic diagram associated with each circuit description is identified in the text. For best understanding of the circuit being described, refer to the applicable schematic and functional block diagrams.

INTEGRATED CIRCUIT DESCRIPTIONS

Digital Logic Conventions

Digital logic circuits perform many functions within the instrument. Functions and operation of the logic circuits are represented by logic symbology and terminology. Most logic functions are described using the positive-logic convention. Positive logic is a system where the more positive of two levels is the TRUE (or 1) state; the more negative level is the FALSE (or 0) state. In this logic description, the TRUE state is high, and the FALSE state is low. Voltages of a high or low state vary among individual devices. For specific device characteristics of common parts, refer to the manufacturer's data book.

Hybrids

The Channel 1 and Channel 2 attenuators and input buffers are hybrid devices combining thick-film and semiconductor technologies. These devices are made with interconnected circuitry on a single ceramic carrier and have improved performance characteristics over a more discrete type circuit.

Linear Devices

The operation of individual linear integrated circuit devices is described in this section using waveforms or graphic techniques when needed to illustrate their circuit action.

BLOCK DIAGRAM DESCRIPTION

INTRODUCTION

The Block Diagram Description gives an overview of the schematic circuit functions (see Figures 9-4, 9-5a, and 9-5b). It is provided as an aid in understanding the overall operation of the 2246 1Y and 2246 Mod A Oscilloscope circuitry before individual circuits are discussed in detail. The Simplified Block Diagram illustration shows the basic interconnections for signal flow and control signals. Schematic diagram numbers that are referred to in the text are shown by a diamond symbol in each block of the figure.

VERTICAL INPUTS (Diagram 1)

The signals for viewing or for triggering are applied to the CH 1 through CH 4 vertical input BNC connectors via coaxial cables or probes. Channels 1 and 2 have a choice of AC or DC input coupling or GND. Channels 3 and 4 have DC input coupling only. Scaling of the Channel 1 and Channel 2 input signals has a range of 2 mV per division to 5 V per division without the use of external attenuators. Channels 3 and 4 are limited to two input attenuator choices: 0.1 V per div and 0.5 V per div.

Scaling of the Channel 1 and Channel 2 signals is done by a series of switchable attenuators that provide either no attenuation, X10 attenuation, or X100 attenuation of the input signal. A low-impedance attenuator following an input signal buffer produces X1, X2, and X5 attenuation steps. Additional control of input signal scaling is provided by the selectable gain Vertical Preamplifiers (shown in Diagram 2).

Channel 3 and Channel 4 input signals are buffered by high input impedance FET amplifiers; no input attenuation of the signal is provided. The gain choices for Channel 3 and Channel 4 are selected by the choice of Vertical Preamplifier gain setting only.

The Measurement Processor controls the operation of much of the switchable circuitry of the 2246 1Y and 2246 Mod A via a common shift register data line (SR DATA). Data bits loaded into the attenuator control and gain shift register (designated SR0) set the magnetic relay switches for the input coupling and attenuator settings and select the gain settings of the Preamplifiers.

VERTICAL PREAMPS AND OUTPUT AMPLIFIER (Diagram 2)

Each vertical channel has identical selectable-gain Preamplifiers. The calibrated gain for each is manually set during adjustment. Enabling of the Preamplifiers to display a channel input signal is controlled by the SLIC Display Logic (U600, Diagram 4). Preamplifier gain settings are controlled by the Measurement Processor via control bits loaded into the attenuator control and gain shift register (Diagram 1). Vertical channel trigger signal outputs are produced by each of the Preamplifiers for triggering the sweep from the applied signal.

The vertical outputs of each preamplifier are connected to a summing node at the input to the Delay-Line Driver. There, the signal current (from the enabled Preamplifiers) and the no-signal standing currents (from the disabled Preamplifiers) are added with the current from the position signal switching circuit.

The signal current for the enabled channel (vertical channel signal plus its position offset) or the readout position current (enabled to the summing node during text and cursor displays) is applied to the Delay-Line Driver. There, it is buffered and compensated to drive the vertical delay line. The delay line produces enough delay in the signal to permit the trigger circuitry to start the sweep before the vertical signal arrives at the crt deflection plates, and the rising edge of the triggering signal may be viewed.

From the output of the delay line, the signals are applied to the Vertical Output integrated circuit. The Vertical Output IC (U701) has provisions for vertical BEAM FIND, bandwidth limiting, vertical gain, and readout display jitter. External filter elements on the Vertical Output IC produce the bandwidth limiting when switched into the amplifier circuitry. The output signal from U701 is then applied to the Vertical Output Amplifier where it gets its final boost in power to drive the vertical crt deflection plates.

An auxiliary Vertical Comparator circuit (U702 and Q703) is shown in Diagram 2. Its purpose is to measure the gains and offsets during SELF CAL to determine the vertical calibration constants needed for the measurements and tracking cursor displays.

A AND B TRIGGER SYSTEM (Diagram 3)

The A and B Trigger System provides the circuitry for trigger source, slope, coupling, and bandwidth selection; trigger level comparison; tv trigger detection; and dc measurements of the measurement source signal.

Trigger selection signals from the Display Logic IC (U600, Diagram 4) drive the switching circuitry internal to U421 and U431. The signals select the correct trigger source, slope, and coupling choice for the present front-panel control setting. For VERT MODE triggering with more than one vertical channel displayed, the trigger source selection changes as each channel is displayed. When the ADD Vertical Mode is selected, a special amplifier arrangement in U421 (for A) or U431 (for B) sums the CH 1 and CH 2 signals to provide an ADD trigger signal for display of the ADD waveform.

The Trigger CPLG (coupling) selections are AC, DC, HF REJ (high-frequency reject), LF REJ (low-frequency reject), and NOISE REJ. Of these, all but NOISE REJ coupling are produced by selecting a filter path with the necessary bandwidth characteristics. NOISE REJ coupling is done in the Trigger Level Comparator circuit by decreasing the sensitivity of the comparator.

When the trigger signal level crosses the comparator threshold set by the Trigger LEVEL and SLOPE control settings, the comparator output changes states. That state change is applied to the Trigger Logic IC (U602, Diagram 4). The Trigger Logic circuitry then produces the gating that starts the A or B Sweep as appropriate.

Separate A and B Trigger bandwidth limit circuits before the Trigger Level Comparators allow the flexibility that is needed for using the B Trigger circuitry as the measurement signal channel. Even when the B Trigger signal itself is bandwidth limited, full bandwidth is used for making measurements. Signals are measured by using the B Trigger Level Comparator as a successive-approximation analog-to-digital converter to determine the peaks or dc level of the applied signal. When making a measurement, the B Trigger Level signal is driven in a binary search by the Measurement Processor (via the DAC system, Diagram 9) while the output of the B Trigger Level Comparator is monitored. When the smallest resolution output of the DAC system causes the comparator output to change states, the Measurement Processor stops the search and uses the DAC input value at that point as the measured value of the applied signal.

Video signal processing to obtain either Field or Line triggering is done in the TV Trigger Detector. Peak detectors determine the negative or positive peaks of the applied video signal. Those levels set the voltage at the reference input of the video signal comparator at a level that strips off all the video information (when the slope selection is correct for the polarity of the applied signal). The remaining composite sync signal is applied directly to the trigger system for Line triggering. Field triggering is obtained by filtering the composite sync to obtain only the vertical sync pulse.

The operating modes of the Trigger circuitry are controlled by the Measurement Processor. Auxiliary Data Shift Register U1103 (the last device in shift register 1) is serially loaded with control bits from the SR DATA line by the SR1 TTL clock. The state (high or low) of the control bits select the bandwidth setting of the A and B Triggers, TV LINE or TV FIELD triggering for the A Trigger system, and either the TV FIELD signal or the average DC voltage of the measurement channel for the B Trigger system. Additional control bits output from the Auxiliary Data Shift Register are the MAG signal (X10 Magnification on or off), $\overline{\text{X-Y}}$ signal (X-Y or Y-T displays), and the $\overline{\text{VERT COMP ENABLE}}$ signal (when vertical SELF CAL is done).

The average dc voltage of a signal being measured is found by filtering all the ac signal components from the measurement channel signal. That dc level is then applied to the B Trigger Level Comparator where its value is determined by successive approximation as described earlier.

DISPLAY AND TRIGGER LOGIC AND PROCESSOR INTERFACE (Diagram 4)

Control of the display states and the trigger system is done by two special devices. The Display Logic IC (U600, also know as SLIC or slow-logic IC) controls activities that enable the vertical channels for display and select the A and B Trigger System operating states. The Trigger Logic IC (U602, also known as FLIC or fast-logic IC) monitors the A and B Trigger signals, the A and B SWP END signals, the DLY END 0 and DLY END 1 signals, and controlling signals from the Display Logic IC. It outputs the A and B GATE and the Z-Axis signals that start the sweeps and unblank the crt at the appropriate times.

Setup data to the internal registers of the two logic devices is sent from the Measurement Processor over the MB DATA line. A register is enabled for loading by the address that is latched on the ADDR0-ADDR3 lines (from Diagram 8). Data bits are written to U600 with the $\overline{\text{SLIC WR}}$ strobe, and to U602 with the $\overline{\text{FLIC WR}}$ strobe. The contents of the internal registers of the Display Logic IC may also be read by the Measurement Processor using the $\overline{\text{SLIC RD}}$ strobe.

The Processor Interface portion of Diagram 4 handles the serial communications between the serial shift registers and the Measurement Processor. This circuitry is the Measurement Processor's means of controlling the circuit hardware setups in response to a front panel control setting. Data controlling the state of the serial data bit to be loaded into the shift registers is placed on the ADDR0-ADDR2 bus lines. That address is decoded to produce either a high or a low that is latched on the SR DATA signal line. The appropriate shift register clock is then generated to load the latched bit. Each bit is loaded in succession until all the control bits of a shift register are loaded.

The purpose of shift register (U502) is to permit the Measurement Processor to read back the outputs of the shift registers for diagnostic purposes and the output of the Vertical Comparator during vertical SELF CAL. The last bit from shift register 0 and shift register 1 ($\overline{\text{RO FREEZE}}$ and $\overline{\text{BW LIMIT}}$ respectively) and the Vertical Comparator (VERT COMP) state are loaded in parallel and serially shifted out onto the MB RETURN line to be read by the Measurement Processor.

A AND B SWEEPS AND DELAY COMPARATORS (Diagram 5)

The A and B Sweep circuitry sets the timing and produces the A and B ramp signals to drive the crt horizontal deflection plates. The Measurement Processor sets the hardware states using control bits loaded into shift register 1. One register (U302) holds the bits for selecting the A Sweep timing resistors and capacitors and one register (U303) holds the B Sweep control bits. The timing resistors are selected by multiplexers (U307 and U308 for A Sweep timing; U310 and U311 for B Sweep timing) that are switched by the states of the control bits; timing capacitors are selected directly by the control bits.

The starting level of the sweeps is held steady by a Baseline Stabilizing circuit, and the sweep ends are determined by two Sweep-End Comparators. A and B GATE signals from the Trigger Logic IC (U602, Diagram 4) control the start of the sweep ramps. A constant charging current to the timing capacitors produces a linear voltage rise across the capacitors. That voltage is buffered by the A and B Sweep Buffers for application to the Horizontal Output Amplifier (Diagram 6).

The SEC/DIV VAR control, when out of the calibrated detent position, changes the charging current delivered to the sweep timing capacitors proportional to its rotation. Decreasing the current lengthens the ramp to decrease the sweep speed.

Two comparator circuits are used to check the A Sweep ramp amplitude against the Reference Delay and Delta Delay voltages. Both Delay End Comparator outputs are applied to the Trigger Logic IC (U602, Diagram 4). The Trigger Logic IC monitors the delays to determine when the B Sweep may either run (for RUNS AFTER B Trigger Mode) or accept a B Trigger (for any of the triggered B Sweep modes).

HORIZONTAL OUTPUT AMPLIFIER (Diagram 6)

Deflection signals applied to the Horizontal Preamplifier (U802) are the A Sweep Ramp, the B Sweep Ramp, the horizontal readout, and the X-Axis input signal for X-Y displays. Mode control signals HD0 and HD1 (from Display Logic IC U600 to the Horizontal Preamplifier) select the horizontal display mode (A Sweep, B Sweep, Readout, or X-Y display). Other control signals to the Horizontal Preamplifier are the MAG signal (for X10 magnification of the sweep), the BEAM FIND signal (decreases horizontal gain), and the horizontal position signal for positioning the display. The X-Y signal controlling U301B reduces the range of the Horizontal POSITION signal delivered to the Horizontal Preamplifier when in the X-Y display mode.

Five manual adjustments are associated with the Horizontal Preamplifier. They are the X10 and X1 gain, the Readout gain, the X-Axis signal gain, and Mag Registration. Mag Registration compensates for offset between X10 and X1 gains, but it is primarily used to center the readout displays horizontally.

The active single-ended deflection signal input to the Horizontal Preamplifier is amplified and converted to a differential output signal. That signal is further amplified and compensated by the Horizontal Output Amplifier to drive the horizontal deflection plates of the crt. The final output amplifier consists of four MOSFET transistors (Q801, Q802, Q805, and Q806). Two transistors are used for each deflection plate (left and right) to divide the power handling requirements.

Z-AXIS, CRT, PROBE ADJUST, AND CONTROL MUX (Diagram 7)

This block of circuitry is divided into several different functions. The largest division is the Z-Axis and CRT circuitry. A INTEN, B INTEN, and RO INTEN input signals are applied to the Z-Axis circuit to set the associated display intensities. Enabling gates from the Display Controller (Diagram 4) select the appropriate Z-Axis input signal for application to the Z-Axis amplifier as the different display types are enabled. The amplified Z-Axis signals are then level shifted to the negative voltage of the crt cathode (-2.7 kV) in a dc restorer circuit. A similar dc restorer circuit provides auto focusing (at the fixed focus level set by the front panel FOCUS control) in response to the intensity level changes. The intensity and auto focus control voltages are applied to the crt where they modulate the electron beam flow that produces the display seen on the screen.

Multiplexer U506, under control of the Measurement Processor, scans the front panel intensity potentiometers and the probe code lines to check for a change. Signal selection for routing through the multiplexer is controlled by the three bits on the POT5-POT7 bus lines from the Pot Data Latch (Diagram 11). Output from the multiplexer is routed to the Front-Panel Multiplexer (U2309, Diagram 11) and multiplexed with other front-panel control levels. Outputs from U2309 are routed to the A-to-D Converter (U2306, Diagram 11) where a digital value representing their analog voltage level is determined. That value is checked against the previously obtained value for a selected potentiometer

or probe code to determine if a change has occurred and, if so, the amount and direction of the change. The Measurement Processor uses that information to generate new control voltages to the circuitry affected by the change.

The Probe Adjust circuit (U930 and associated circuitry) produces a square-wave signal which is output to the front panel PROBE ADJUST jack for compensating voltage probes and checking the vertical deflection system of the oscilloscope.

The Volts Cal circuit (U931 and an associated precision voltage divider) provides the accurate dc voltage levels used during vertical SELF CAL to check the gain and offset of the measurement channels.

The Scale Illumination circuit is made up of three incandescent graticule lamps and current-source transistors. The SCALE ILLUM potentiometer sets the bias level on the transistors' emitters.

MEASUREMENT PROCESSOR (Diagram 8)

Many of the oscilloscope circuitry functions are directed by the Measurement Processor (U2501). The Measurement Processor, under firmware control, monitors the front-panel controls and sets up the circuitry under its control according to the settings made and the instructions contained in the System ROM.

The Measurement Processor communicates directly with the devices on its eight-bit data bus. The Measurement Processor selects the device to transfer data to or from by placing the address of the device on the Measurement Processor Address Bus. That address is decoded to produce a strobe that enables the bus device corresponding to the address. Writing to or reading from the enabled device is controlled by write or read ($\overline{WR}$ and $\overline{RD}$) pulses from the Measurement Processor. Communication on the data bus is usually limited to high speed data transfer only (to and from the System RAM and from the System ROM) and not direct control of any circuit functions.

For controlling most of the circuit operating states, the Measurement Processor places serial bits on the bidirectional MB DATA line. Appropriate enabling strobes and clocks are generated either in its address decoding circuitry or by the Processor Interface circuitry (Diagram 4) to load the control data into 24-bit or 32-bit shift registers. The outputs of these registers control such things as attenuator settings, preamplifier gains, sweep timing, and trigger operating modes; all circuit operating functions that either change with front panel settings only or at a slow rate.

Scanning of the front panel controls and lighting of the front-panel LEDs that back light the buttons is under control of the Measurement Processor. These events occur at long intervals compared to the operating speed of the Measurement Processor. The front-panel switch closures are read by the Measurement Processor over a serial communication line (SW BD DATA).

READOUT SYSTEM (Diagram 9)

Readout System

The Readout Processor (U2400) controls the display of text and cursor readouts as directed by the Measurement Processor. The ASCII code of each character (blanks included) in a full screen of readout (one field) is loaded into the appropriate memory location of the Character Code RAM (U2406) by the Measurement Processor. It is then up to the Readout Processor to control the display process.

When the Readout Processor addresses the Character Code RAM for display of the loaded characters, the address of a memory location dictates the place that the addressed character will appear on the face of the crt. The ASCII code found at the addressed location in the Character Code RAM then accesses the character to be displayed from the Character Dot Position ROM (U2408). The screen position of an individual dot within an addressed character is directed by the character data obtained from the Character Dot Position ROM.

The data bits specifying the character position on screen and the dot position within a given character are converted to analog vertical and horizontal position signals by the readout DACs (U2412 for vertical and U2413 for horizontal). For cursors and cursor related text, voltages representing the cursor positions are added in the output mixer circuitry (U2414, U2415, and U2416) to place the readout correctly on screen. Vertical position information needed for the measurement-tracking cursors and readouts is added in the Vertical Position Switching circuit (Diagram 2).

The dots are continually refreshed to maintain a flicker-free readout. When the readout data needs changing, the Measurement Processor halts the refreshing and loads the new screen of data into the Character Codes RAM.

SWITCH BOARD AND INTERFACE (Diagram 10)

Most of the front panel switches that can be read by the Measurement Processor are "soft" switches; they are not connected directly into the circuit to be controlled. The front-panel control physical parameters of capacitance, leakage resistance, and inductance, therefore, cannot affect the operation of the controlled circuit. The wiper voltage of some of the potentiometers is digitized, and that digitized data is used by the Measurement Processor to set up the circuitry under its control as dictated by the control change.

The momentary push-button switches are rapidly scanned at short intervals by the Measurement Processor to check if one is being pressed. When a switch closure is detected, the Measurement Processor makes the necessary circuit or display changes as directed by its firmware instructions for that button and the existing operating states.

Functions are shown to be on by turning on the LED (light-emitting diode) that back lights the push button or panel label. The Measurement Processor controls the lighting via control registers (U2523 and U2524) that it reloads with control data to enable the correct LED with each button or mode change.

ADC AND DAC SYSTEM (Diagram 11)

The ADC and DAC system is the Measurement Processor's control link to the analog circuitry. When the Measurement Processor does a scan to determine the front panel control settings, the DAC system drives the input to the A-to-D converter comparator (U2306) in a binary search pattern to determine the voltage level applied to the other input of the comparator. The smallest incremental change in the DAC input data that produces a switch in the comparator's output identifies the digital value of the unknown voltage. The output of the comparator (AD COMP) is applied to the Data Buffer U2515 on Diagram 8.

POWER SUPPLY (Diagram 12)

The low and high voltages required to power the 2246 1Y and 2246 Mod A are produced by a high-efficiency, switching power supply. Input ac voltage from 90 to 250 volts and from 48 to 445 Hz is converted to a dc voltage that powers a preregulator circuit. The preregulator supplies regulated power to an inverter switching circuit in the primary of the power transformer (T2204). The secondary voltages produced at the secondary windings of the transformer are rectified and filtered to provide the low voltage power requirements of the instrument.

High voltage to drive the crt is generated by a multiplier circuit (U2203) that provides the +14 kV post-deflection anode voltage and the -2.7 kV to the cathode. The 6.2 Vac heater voltage is supplied by a isolated secondary winding from the power transformer that is referenced to the -2.7 kV cathode voltage.

DETAILED CIRCUIT DESCRIPTION

VERTICAL INPUTS (Diagram 1)

Channel 1 and Channel 2 input circuits on this schematic diagram are arranged identically. Only Channel 1 circuit numbers are referred to in the discussion. CH 3 and CH 4 are also arranged identically to each other and described separately from CH 1 and CH 2.

Attenuator and Vertical Mode Control Registers

The switching relays of Channel 1 are driven by transistor array U174. Drive to each of the transistors in the array to switch the relay states is supplied by the Measurement Processor (U2501) via U171. That device is a portion of a shift register formed by U171, U172 (for channel 2 relays), and U173 (for Preamplifier gains). The devices are connected in series to form one long shift register (designated Shift Register 0). Serial data bits for the entire register string are loaded at pin 2 of U171 from the SR DATA line by the SR0 CLOCK applied to pin 3 of all three devices. See Table 3-1 for data bit assignments. Tables 3-2, 3-3, 3-4, and 3-5 define the bit states for controlling the switching.

Table 3-1
Shift Register 0 Bit Assignment

Pin	Signal	Controls
	U171	
4	$\overline{\text{CH 1 GND}}$	K101—CH 1 GND Coupling (last bit)
5	CH 1 AC	K100—CH 1 AC Coupling
6	$\overline{\text{CH 1 X10 1}}$	K102—CH 1 X10 Attenuator 1
7	CH 1 X10 2	K103—CH 1 X10 Attenuator 2
14	CH 1 X1	K105—CH 1 X1 Buffer Attenuation
13	NOT USED	No connection
12	CH 1 X5	K104—CH 1 X5 Buffer Attenuation
11	CH 1 PREAMP 1	U210—CH 1 Preamplifier Gain
	U172	
4	CH 1 PREAMP 0	U210—CH 1 Preamplifier Gain
5	$\overline{\text{CH 2 GND}}$	K108—CH 2 GND Coupling
6	CH 2 AC	K107—CH 2 AC Coupling
7	$\overline{\text{CH 2 X10 1}}$	K109—CH 2 X10 Attenuator 1
14	CH 2 X10 2	K110—CH 2 X10 Attenuator 2
13	CH 2 X1	K112—CH 2 X1 Buffer Attenuation
12	NOT USED	No connection
11	CH 2 X5	K111—CH 2 X5 Buffer Attenuation
	U173	
4	CH 2 PREAMP 1	U220—CH 2 Preamplifier Gain
5	CH 2 PREAMP 0	U220—CH 2 Preamplifier Gain
6	CH 2 INVERT	U220—CH 2 Preamplifier Invert
7	CH 3 PREAMP 1	U230—CH 3 Preamplifier Gain
14	CH 4 PREAMP 1	U240—CH 4 Preamplifier Gain
13	ZERO HYST	U431C—B Trigger Comparator Hysteresis
11	$\overline{\text{RO FREEZE}}$	U509C—Controls Readout for SELF CAL (first bit loaded)

Input Coupling

Signals applied to the CH 1 BNC connector are coupled to the CH 1 attenuator via the CH 1 Input Coupling circuit. Switching logic for those connections is shown in Table 3-2. Relay K100 switches between direct (DC) and capacitive coupling (AC) of the input signal; K101 switches between connecting the applied input signal and the VOLT CAL signal to the input of the attenuator. The VOLT CAL signal line provides either the ground for GND Coupling in normal oscilloscope operation or a test voltage input for characterization during vertical SELF CAL.

With the Input Coupling set to GND (both AC and DC off), the signal path is bypassed by C113. That capacitor filters any noise from the VOLT CAL signal line. There is no precharge of the input coupling capacitor (C112) when the coupling is in ground (GND). Resistor (R111), in series with the BNC input, is a damping resistor.

Table 3-2
Input Coupling Control Bit States

Coupling	$\overline{\text{CH 1 GND}}$ or $\overline{\text{CH 2 GND}}$	CH 1 AC or CH 2 AC
GND/CAL	0	1
AC	1	1
DC	1	0

The probe coding signal (CH 1 PRB) is applied to a multiplexer (U500, Diagram 7) where it is selected to be digitized in turn with the other probe-code signals and the front panel potentiometers. The Measurement Processor determines, from the digitized value of the voltage, the attenuation factor of any attached coded probe (Tektronix coded probes). The scale factor of the VOLTS/DIV readout is then switched to reflect the correct scaling of the displayed signal. Uncoded probes and coaxial cables are interpreted as having no attenuation for setting the readout scale factors.

High-Impedance Attenuator

Switching relays K102 and K103 control the signal path through the high-impedance attenuator, AT117. Signal attenuation is done by two 10X attenuator sections; for 100X attenuation, the two sections are cascaded (see Table 3-3 for switching logic). The 1 MΩ termination resistance at the output of the attenuator is divided into two parts: 750 kΩ and 250 kΩ. An output taken across the total resistance is applied to the buffer amplifier fast-path input; another output taken across the 250 kΩ section is applied to the slow-path input. Low-frequency compensation for the hybrid attenuators is adjusted by C10 and C11 (parts are part of the hybrid circuit on the ceramic carrier); input C is adjusted using C114.

Input Buffer Amplifier and 1X, 2X, 5X Attenuators

Input Buffer Amplifier U112 (for CH 1) is a hybrid device. The amplifier portion of the circuitry is a fast-path/slow-path buffer having unity voltage gain that presents a high-resistance, low-capacitance load to the signal from the high-impedance attenuator and a low output impedance to the low-impedance attenuator at the output of the amplifier. The switchable low-impedance, voltage divider network of U112 provides 1, 2, and 5 times attenuation of the output signal for application to the Vertical Preamplifier.

The input signal is applied to pin 2 (fast-path input) and pin 4 (slow-path input) of U112 from the 1 MΩ divider at the output of the high-impedance attenuator. Internal circuitry of U112 isolates the signal from loading of the low-impedance attenuator and provides the slow-path and fast-path signal amplification. The fast amplifier path quickly passes the fast leading and falling edges of an input signal with the slow path catching up to complete the signal transfer. The output of the buffer sees a 300 Ω input impedance to the low-impedance attenuator, and the preamplifier sees a 75 Ω output impedance at pin 8 of U112 for all VOLTS/DIV switch settings. At 2 mV/div, additional capacitive loading is applied to the output of the input buffer amplifier by C185 and Q181. This increases the high-gain bandwidth of the amplifier.

CH 3 and CH 4 Input Amplifiers

The CH 3 and CH 4 input buffer amplifiers are identical discrete FET amplifiers. Input coupling for these two vertical inputs is always DC; there is no coupling switch. The 1 MΩ input is formed by a series voltage divider that attenuates the input signal by five times for application to the gate of the input FETs. The VOLTS/DIV setting (either 0.1 V or 0.5 V) is made in the Preamplifier stage of the channel. Operation of CH 3 is described; like components in CH 4 do the same job.

From the gate of Q131A, diode CR131 provides protection from negative overvoltages exceeding about -8 V. Input C is adjusted by C134 for low-frequency compensation. High-frequency response is compensated by C138 across load resistor R137. Step balance is adjusted by R141 in the source lead of Q131B. The single-ended output of U131A is applied via R139 (a 75 Ω resistor) to the CH 3 Preamplifier. The impedance seen by the other differential input of the Preamplifier (U230, pin 8, Diagram 2) is matched by the parallel combination of R158 and C159 in series with R160.

The probe-coding signal, CH 3 PRB, is read the same way as the CH 1 and CH 2 probe-coding signals. The VOLTS/DIV readout for Channel 3 is switched to correctly match the probe attenuation factor (when properly coded probes are used).

Table 3–3
CH 1 and CH 2 Attenuator and Gain Control Bit States

VOLTS/DIV	$\overline{\text{CH 1 X10 1}}$ or $\overline{\text{CH 2 X10 1}}$	CH 1 X10 2 or CH 2 X10 2	CH 1 X1 or CH 2 X1	NC	CH 1 X5 or CH 2 X5	CH 1 PREAMP 1 or CH 2 PREAMP 1	CH 1 PREAMP 0 or CH 2 PREAMP 0
2 mV	1	0	1	0	0	0	0
5 mV	1	0	1	0	0	0	1
10 mV	1	0	1	0	0	1	1
20 mV	1	0	0	1	0	1	1
50 mV	1	0	0	0	1	1	1
100 mV	1	1	1	0	0	1	1
200 mV	1	1	0	1	0	1	1
500 mV	1	1	0	0	1	1	1
1 V	0	1	1	0	0	1	1
2 V	0	1	0	1	0	1	1
5 V	0	1	0	0	1	1	1

VERTICAL PREAMPS AND OUTPUT AMPLIFIER (Diagram 2)

Vertical Preamplifiers

Each input channel has it own Vertical Preamplifier (CH 1–U210, CH 2–U220, CH 3–U230, CH 4–U240). The gain setting of the Preamplifier is controlled by Measurement Processor U2501 via the assigned control bits from Shift Register 0 (see Table 3–3). Channel 1 and Channel 2 gains require two control bits (on pins 1 and 2 of the Preamplifiers) to set three different gains for 2 mV, 5 mV, and 10 mV VOLTS/DIV scaling. From 10 mV per division and up, the gain of the CH 1 and CH 2 Vertical Preamplifiers is set to 10 mV per division. The 1, 2, 5 scaling sequence for the remaining VOLTS/DIV switch settings is obtained by switching the high– and low–impedance attenuators. Gain of the CH 3 and CH 4 preamplifiers is controlled by one bit each (on pin 2), since there are only two scaling settings (0.1 V and 0.5 V per division) to select (see Table 3–5 for the gain–control bit states).

The internal circuitry of each Vertical Preamplifier is matched for the 2 mV, 5 mV, and 10 mV gain settings and the dc offsets. The output gain of each Preamplifier is adjusted by varying the common–mode resistance across the output pins (pin 13 to pin 14) to produce calibrated gain for each of the vertical channels.

Each Vertical Preamplifier has a trigger pickoff (pins 17, 18, 19, and 20) for supplying the internal trigger signal to the A and B Trigger Source Selector Multiplexers. Capacitor coupling from pins 17 and 18 to pins 19 and 20 provides a fast–path signal into a duplicate, but level–shifted, slow–path signal line. The negative side of the differential trigger signal is terminated in a capacitor to ground (from pin 19) to provide a balance for the transmission line.

Table 3–4
CH 2 INVERT Control Bit

Setting	CH 2 INV
Normal	0
INVERT	1

Table 3-5
CH 3 and CH 4 Gain Control Bit

VOLTS/DIV	PREAMP1
0.1 V	0
0.5 V	1

The VOLTS/DIV VAR controls for CH 1 and CH 2 (R2101 and R2103) directly vary the gain of the Vertical Preamplifiers between the calibrated VOLTS/DIV settings. The Measurement Processor detects whether the VAR control for a channel is in or out of its detent position; and, if out, a greater-than symbol (>) is placed in front of the VOLTS/DIV readout to show that the channel is uncalibrated.

Each Preamplifier produces a standing current of about 11 mA into a common summing node. Output of the vertical signal from a Preamplifier is controlled by enabling signals (CH 1 EN through CH 4 EN) from Display Logic IC U600 (shown on Diagram 4). The enabling signal that turns on a vertical channel signal also enables the position signal current for that channel through the Vertical Position Switching circuit (either U202 or U201) into the summing node.

Delay Line Driver

The Delay Line Driver is a differential amplifier that provides the signal amplification needed to drive the delay line. The circuit is compensated to produce the needed circuit response at the output of the delay line. Both sides of the differential amplifier are identical and circuit operation of the positive side components is described.

Transistors Q250 and Q252 are arranged as a feedback amplifier. The parallel combination of R250F and R250G supplies the feedback from the emitter of Q252 back to the base of Q250. Diode CR260 provides a one-diode voltage drop in the feedback loop for proper biasing of the base-to-collector junction of the input transistor (Q250). Gain of the amplifier is set by the value of common-mode resistor R270 (there is a small dc voltage gain). If the Vertical Preamplifier and Vertical Position circuit output currents are exactly 11 mA (no signal and no offsets) the feedback current is zero. Some standing feedback current will be present if the sum of the input currents is not exactly 55 mA. A 1 mA current change of the input base current to Q250 produces a 41 mV change at the collector of Q252.

The no-signal dc output voltage from Q252 is +7.5 V, and the standing current is about 15 mA. The differential voltage between the positive and negative side of the delay line with no signal input is 0 V ±0.5 V. The differential signal voltage input to the delay line is about 29 mV per graticule division of deflection.

Biasing of the input transistor bases is supplied by R262 and R264 (for Q250) and R263 and R265 (for Q251). Two resistors in series are used to provide the power handling needed (they are low-wattage precision resistors). The dc voltage at the bases of Q250 and Q251 is maintained at 7.5 V by a bias stabilization circuit. Operational amplifier U260 compares the common-mode voltage at the junction of R254 and R255 to the +7.5 V supply on its pin 3 input. If the base voltage is too low, U260 raises the common-mode emitter voltage (and thereby the base voltage) of the two input transistors.

Compensation components peak up the circuit response to counteract the roll off effects of the delay line. The three series-rc combinations (C272 and R272, C273 and R273, and C274 and R247) between the emitters of Q252 and Q253 compensate different frequency ranges to correctly shape the circuit response. The series-rc circuit between the collectors of Q252 and Q253 (C275 and R275) damps the gain at high frequencies to prevent oscillation. Voltage-variable capacitors CR262 and CR263 are used to compensate for increased rolloff at high operating temperature. As the temperature increases, thermistor RT201 reduces the bias across CR262 and CR263. This causes the capacitance of the series combination of CR262 and CR263 to increase, peaking the response further. Impedance matching and input termination of the 75 Ω delay line is done by the parallel-series combination of R278, R279, R280, and R281.

Vertical Position Switching

The Vertical Position Switching circuit consists of buffer amplifiers for the four vertical channel position signals (U203A, B, C, and D), two solid state switch arrays (U201 and U202), and a transistor paraphase amplifier circuit (U280, Q284, and Q285).

The vertical positioning voltages from the front panel POSITION controls are applied to the noninverting inputs of the four voltage-follower buffer amplifiers (U203A through U203D). The inputs and outputs of the amplifiers are capacitively bypassed to eliminate noise from the position signals. The buffered output signals are applied to switching arrays U201 and U202 for selection at the correct time for positioning the displayed trace and position-related readouts.

POSITION VOLTAGE SWITCHES. Selection of the channel or readout position signals to be supplied to the paraphase amplifier summing node is controlled by several sources. The vertical channel enable signals (CH 1 EN through CH 4 EN) from Display Controller U600 (Diagram 4) turn on the appropriate channel position signal for the enabled Vertical Preamplifier when displaying waveforms. The nominal position range of the vertical signal is ±12 divisions.

When position-dependent readout (labeled cursors that follow the vertical channel position controls) is displayed, the RO CH 1 POS EN through RO CH 4 POS EN signals from tri-state latch U2403 (shown on Diagram 9) enable the appropriate vertical position signal into the summing node at the input to the paraphase amplifier. The Readout Position Enable signal lines are tri-stated (open) during display of the channel signals so that the Vertical Channel Enable signals have control of the position enable lines. Also, the Readout Position signals cannot override the Vertical Channel Enable signal levels to turn on a Vertical Channel Preamplifier with the series resistors (R212, R222, R232, and R242) in the signal path. The vertical position of the enabled vertical channel is added to the position of the readout so that the cursors appear at the correct vertical position in the display.

When non-position tracking readout is displayed (i.e., menus and scale-factor readouts), the vertical screen position of the readout is conveyed by the RO VERT signal only. The RO VERT signal is enabled into the summing node input of the paraphase amplifier by the RO VERT EN signal for both readout types (position-tracking or fixed). Extra noise bypassing provided by decoupling components R205, R207, and C268 on the RO VERT signal line reduces jitter of the readout display.

During vertical SELF CAL, the RO CH 1 POS EN through RO CH 4 POS EN signals enable the appropriate vertical position signal into the summing node at the input to the paraphase amplifier without turning on a channel Vertical Preamplifier. The gain and offset of the voltage followers and position switches may then be calculated independently from the vertical channel signal. The computed offsets are then used by the Measurement Processor to correctly place the position-tracking readouts (cursors) on the display relative to the vertical position of the waveform.

The TRACE SEP EN and RO TR SEP EN signals operate the same as described for the channel enable and readout position enable signals. A slight difference between the channel vertical position signals and the TRACE SEP signal is that TRACE SEP is attenuated more. The higher value of R206 on pin 13 of U201 reduces the TRACE SEP range to ±4 divisions as compared to ±12 divisions for the vertical signals.

POSITION PARAPHASE AMPLIFIER. The Position Paraphase amplifier circuitry is formed by a transistor array (U280) driving two discrete transistors (Q284 and Q285). The circuit is configured as two negative-feedback amplifiers that produce a differential output current from the summed single-ended input current. Transistors U280B and U280E are constant-current sources for their associated amplifier pairs in the array. The feedback path for the U280A–U280F amplifier combination is via R286 from the emitter of Q284. The no-signal feedback current through R286 is 1 mA. Feedback for the U280C–U280D combination is via R289 from the emitter of Q285. Feedback current in R289 is 100 μA. Both Q284 and Q285 are high beta transistors requiring little base-drive current. The overall vertical displacement response from the input (at the base of U280F) to the output is 200 μA per division of vertical screen displacement.

The signal applied to the base of U280C is the inverted position signal developed across R290 in the emitter of Q284. The signal is again inverted by U280C to drive the base of Q285 in the opposite direction from the signal at the base of Q284. The standing dc current (no signal input) output current into the delay line input summing node is 11 mA; the same as the output of the vertical preamplifiers. Vertical centering of the menu and readout displays within the graticule area is done using VERTICAL READOUT CENTERING potentiometer R260.

Vertical Output Amplifier

WARNING

Vertical Output IC U701 runs hot and can burn you if touched. The metal tab on top of the device is NOT ground; it is the -5 V supply to the IC.

Vertical Output IC U701 buffers the signal output of the delay line and provides the circuitry for the BW LIMIT and BEAM FIND functions and for the vertical signal gain adjustment. The inputs to the Vertical Amplifier are terminated in 75 Ω by external resistors R706 and R707. External filter components C707, L701, and L702 produce the bandwidth limiting of the vertical signal when internally switched into the output amplifier circuitry of U701.

Manual calibration of the vertical signal display to the crt graticule is done using VO Gain potentiometer R703. The components between pins 12 and 22 of U701 (Q704, R726, R727, and R728) provides gain correction for the small difference in gain between full bandwidth and bandwidth-limited operation of the Vertical Output IC. Correction for a thermal change between display of the signal and display of the readout is provided by the RO Jitter adjustment (R724).

WARNING

Vertical Output Amplifiers Q701 and Q702 run hot and can burn you if touched.

Vertical Output Amplifiers Q701 and Q702 provide the signal gain necessary to drive the vertical crt deflection plates. The deflection plates have a comparatively large capacitance, and to change the voltage as fast as necessary to deflect the crt beam, the Vertical Output Amplifiers have to handle large current demands. A reduction in circuit capacity is made by reducing the collector capacitance of the output transistors. The cases of Q701 and Q702 are NOT the collectors; they are connected to the transistors' base material; the case tabs mark the collector leads. In the collector circuits, T-coils L703 and L704 boost the vertical bandwidth of the output amplifiers; and R731 and R732 are damping resistors.

Vertical Comparator

The Vertical Comparator circuit (U702, Q703, and associated components) allows the Measurement Processor to determine the gain and offset of the vertical system up to the input to the Vertical Preamplifier. The circuit is enabled only during the vertical self characterization routine. Known dc voltage levels are applied to the attenuator inputs, and U702 compares the voltage from the delay line to the HORIZ POS signal which is being driven in a binary search pattern. The output voltage is found by successively narrowing the search levels until the smallest change possible from the DAC system causes the Vertical Comparator output to change states. Using the measured value to compare against the known input voltage, the Measurement Processor determines a Vertical Calibration constant that must be applied to produce accurate voltage measurements.

A AND B TRIGGER SYSTEM (Diagram 3)

Most of the trigger signal switching and trigger level comparator circuitry is contained on two integrated circuit devices (U421 and U431). Within the devices is the logic circuitry that drives the selectable variables of Trigger SOURCE, Trigger CPLG, and Trigger SLOPE for both the A and the B Triggers. Selection of the trigger variables is done by control bits generated by Display Sequencer U600 (Diagram 4). The remaining portions of the circuitry shown in Diagram 3 include the A and B Trigger bandwidth limiting circuitry, the TV Trigger Detector circuitry, the Auxiliary Control Register (part of Shift Register 1), and the DC Filter for the measurement system. The B Trigger circuitry does double duty in that measurements for the DC, +PEAK, -PEAK, and PEAK-to-PEAK values of a signal are done in the B Trigger channel. Consequently, voltage measurements cannot be done in ALT or B Horizontal Display Modes when the B Trigger circuitry is in use.

A and B Trigger Source Selectors

Analog switching of the Trigger signal sources is done by the circuitry in U421A (for the A Trigger) and U431A (for the B Trigger). The possible Trigger SOURCE selections are the same for both the A and the B Trigger system. They are CH 1, CH 2, CH 3, CH 4, LINE, and VERT. In ALT Vertical MODE, when VERT is the selected source a trigger is obtained in succession for each displayed channel. A stably triggered display will be obtained for each channel signal without regard to frequency relationships between the applied signals. If ADD Vertical MODE is selected, a special adder circuit in U421A and U431A, adds the CH 1 and CH 2 signals to produce an ADD trigger signal composed of the two inputs. The LINE Trigger signal is a sample of the power-line input voltage. Multiplexer U1106A, in the input path for the LINE trigger signal, selects between the LINE signal (for oscilloscope operation) and the TB CAL signal (used for horizontal self characterization).

When a Voltage Measurement is being done, U431A in the B Trigger circuit acts as the measurement channel selector and selects either the CH 1 or the CH 2 input signal to be measured.

A and B Trigger Coupling Selector

Coupling selections for DC, AC, HF REJ, and LF REJ are done by U421B for the A Trigger and U431B for the B Trigger. The trigger signal path is through a filter circuit having the proper bandpass characteristics for the selected trigger coupling. NOISE REJ coupling is done differently. The two Trigger LEVEL Comparators (U421C and U431C) have selectable hysteresis. For NOISE REJ Trigger CPLG, the

hysteresis is increased so that a larger signal change is required to produce a state change at the output of the comparators. Trigger Coupling control logic is shown in Table 3-6.

Another signal source selectable in the Trigger Coupling Selectors is the output of the TV Trigger Detector (TV LINE or TV FIELD). An applied composite video signal is separated so that the horizontal line or vertical field sync pulse can be used to trigger the oscilloscope for Television signal display (see TV Trigger Detector description). Selection between LINE or FIELD for the A Trigger source is done by multiplexer U1104A with its output being applied to pin 18 of U421B. Pin 18 of U431B in the B Trigger system has an input of either the TV Line sync signal, for TV triggering of the B Sweep, or the output of the Measurement Signal Low-Pass Filter, when the DC measurement mode is active.

Table 3-6

Trigger Selection Logic

Front Panel Coupling Selection	Latched Bit Values				Description
	SLOPE	TS2	TS1	TS0	
A Sweep Mode (U421) AUTO LEVEL, AUTO, NORM, or SGL SEQ					
DC	0	0	1	0	DC Coupled
NOISE REJ	1	0	1	0	DC Coupled, Noise Reject
HF REJ	0	1	0	1	HF Reject
LF REJ	0	0	1	1	LF Reject
AC	0	1	0	0	AC Coupled
A Sweep Mode (U421) TV LINE or TV FIELD					
DC	1	0	0	0	TV Input, Noise Reject
NOISE REJ	1	0	0	0	TV Input, Noise Reject
HF REJ	1	0	0	0	TV Input, Noise Reject
LF REJ	1	0	0	0	TV Input, Noise Reject
AC	1	0	0	0	TV Input, Noise Reject
B Sweep Mode (U431) AUTO LEVEL, RUNS AFTER or NORM					
DC	0	0	1	0	DC Coupled
NOISE REJ	1	0	1	0	DC Coupled, Noise Reject
HF REJ	0	1	0	1	HF Reject
LF REJ	0	0	1	1	LF Reject
AC	0	1	0	0	AC Coupled
B Sweep Mode (U432) TV LINE					
DC	1	0	0	0	TV Input, Noise Reject
NOISE REJ	1	0	0	0	TV Input, Noise Reject
HF REJ	1	0	0	0	TV Input, Noise Reject
LF REJ	1	0	0	0	TV Input, Noise Reject
AC	1	0	0	0	TV Input, Noise Reject

MEASUREMENT SIGNAL LOW-PASS FILTER. The average dc level of a signal is obtained for measurement by filtering the measurement channel signal to remove all but the dc component of the signal. A active RC filter circuit formed by U1101B, R1154, R1155, C1154, and C1155 does the filtering with U1101B buffering the filtered output voltage to isolate it from loading. The dc level is applied back to the Trigger Coupling switch (U431B, pin 18) for input to the B Trigger Comparator (U431C) where the actual measurement is done (see the B Trigger Comparator description).

A and B Trigger Bandwidth Limit Circuits

The A Trigger Bandwidth Limit circuit components (Q440, U441F, CR432, C432, L432, R432, Q444, and U441E) act to roll off the trigger circuit bandwidth when $\overline{\text{BW LIMIT}}$ is active (low). The B Trigger Bandwidth Limit circuit components do the same job (with some additional compensation components), but can be selected independently of the SCOPE BW front panel setting (by the Measurement Processor using the BW FULL B signal). That is because the B Trigger Channel is used for the Measurement system, and the circuit bandwidth must be full for making measurements. The actual circuit operation for both is the same, and only the A Trigger Bandwidth limiting action is described.

For full trigger bandwidth, the $\overline{\text{BW LIMIT}}$ signal from Auxiliary Register U1103 is written high by the Measurement Processor. That high is inverted to a low by U441E and U441F and applied to the bases of Q440 and Q444. The low output turns off Q444 and disconnects C444 from ground. The purpose of C444 is to act as part of an LC filter that rolls off the signal. The low applied to the base of Q440 turns that transistor on pulling the anode of CR432 up and forward biasing it. The trigger signal ac path then bypasses L432 and R432 through CR432 and C432. The dc component of the trigger signal is still via L432 and R432.

When the bandwidth is limited, the $\overline{\text{BW LIMIT}}$ signal is low. That is inverted to a high that turns on Q444 (connecting C444 to ground) and turns off Q440 (reverse biasing CR432). The trigger signal path is now through L432 and R432 with C444 connected to ground to roll off the circuit bandwidth.

A Trigger Comparator

The Trigger signal is compared with the A Trigger LEVEL setting by U421C to determine the signal level and slope of the trigger signal that produces a sweep trigger. The comparator slope is set internally by the switching logic; the Trigger comparison level is set using the front panel Trigger LEVEL control. A fixed amount of hysteresis in the A Trigger Level Comparator prevents double triggering on signals accompanied by normal noise. NOISE REJ coupling increases the hysteresis by a factor of four to reduce the Comparator's sensitivity to noise if triggering on very noisy signals is required. Once a level state change occurs, a larger change in the opposite direction is required (because of the circuit hysteresis) to reverse the state change. The differential output of U421C is applied to the Trigger Logic IC (U602, Diagram 4) where the gating signals to start the display sweep are generated.

B Trigger Comparator and Measurement A-to-D Converter

For B Trigger signal comparison, the B Trigger Level Comparator (U431C) works the same as the A Trigger Level Comparator. Its differences lay in its use as the Measurement Channel A-to-D Converter for making signal voltage measurements. When a measurement is being done, the ZERO HYST control bit from Shift Register 0 (U173, Diagram 1) is set high. This high turns off Q480 and disconnects U431C pin 28 from ground. The biasing combination of R476 and R486 between the -5 V supply and ground reduces the hysteresis of the B Trigger Comparator to zero. A small incremental change in signal level to the comparator will then cause it to change output states. The B REF TRIG LVL signal on pin 24 of U431C is driven in a binary search pattern by the Measurement Processor (via the DAC System) while monitoring for state changes at the output. The smallest incremental input change of the B REF TRIG LVL that produces an output change then defines the voltage point being measured (+PEAK, -PEAK, or DC). When peak-to-peak voltage measurement is done, the Measurement Processor merely measures one peak voltage of the signal, then the other.

The output of the B Trigger Level Comparator is applied to the B Trigger input of U602 (Diagram 4) via delay line DL22. The 18 ns delay produced permits the leading edge of the B trigger signal to be viewed when displaying the B Sweep.

Auxiliary Shift Register

Auxiliary Shift Register U1103 is the last register in Shift Register 1. Control bits loaded into the register from the AUX DATA signal line (from U303 pin 9, Diagram 5) are serially shifted through Sweep Shift Register U302 and U303 (Diagram 5). Circuit functions controlled by the bits in U1103 are the following:

B TV TRIG EN: Switches between the B TV Trigger signal and the DC measurement signal voltage (U1106C).

TV FIELD SEL: Switches the A Trigger between TV FIELD and TV LINE (U1104A).

MAG: Controls the X10 Magnification function of the Horizontal Output Preamplifier (U802, Diagram 6).

$\overline{\text{VERT COMP EN}}$: Turns on the Vertical Comparator (U702, Diagram 2) during voltage self characterization.

TB CAL: Switches the time-base calibration signal into the B trigger system during horizontal self characterization (U1106A).

BW FULL B: Switches between full and limited B Trigger bandwidth.

$\overline{\text{BW LIMIT}}$: Switches between full and limited A Trigger bandwidth. The $\overline{\text{BW LIMIT}}$ signal has a second use. As the last bit in Shift Register 1, it is fed back to the Measurement Processor during diagnostic checks done on the Shift Registers.

$\overline{\text{X Y}}$: Switches the range of the horizontal position signal (HORIZ POS) between that needed for Y-T display and that needed for X-Y display (U301B, Diagram 6).

Multiplexer (U1106A) normally provides the Line Trigger signal picked off from the Power Supply input. For self characterization (SELF CAL) of the Time Base, the switch outputs the TB CAL signal obtained from the Measurement Processor (U2501, Diagram 8).

TV Trigger Detector

INPUT AMPLIFIER. The signal at pin 19 of U421A is applied to pin 3 of U1101A via a low-pass filter formed by R426, L426, and C426. The filter limits the bandwidth of the X-AXIS signal to about 5 MHz for application to the Horizontal Preamplifier (U802, Diagram 6) and to the TV Trigger Detector circuitry. Operational amplifier U1101A provides low-pass gain of the applied composite video signal that further attenuates the video portion of the signal relative to the sync pulses. The output signal from U1101A is applied to the Peak Detectors and the Sync Comparator.

PEAK DETECTORS. The peak detectors determine the positive and negative peaks of the applied composite video signal. Those peaks voltages are applied across a voltage divider circuit used to set the comparison level (slice level) to one input of a comparator. That level is such that, when the user selects the correct sync polarity for the applied signal, the middle of the sync tips is at the threshold level of the comparator. The output of the comparator then switches only on the sync tips of the applied signal. The peak detectors are complementary in that the positive-peak detector transistors (Q1101, Q1102, and Q1103) and the negative-peak detector transistors (Q1104, Q1105, and Q1106) are complementary types (PNP-NPN). Both detectors are driven from the same input signal; the positive peaks of the video signal forward bias Q1101, and the negative peaks forward bias Q1104. The operation of the positive peak detector is described.

The composite video signal is applied to the emitter of Q1101. A positive-going signal increases the current through Q1101, causing the collector voltage to rise. The rising collector voltage biases on Q1102 harder, and C1114 charges up rapidly following the positive-going signal up to its positive peak. When the input signal starts negative, Q1101 is turned off immediately by the charge held on C1114. That leaves C1114 holding the positive peak voltage of the input signal. Emitter-follower Q1103 applies that peak voltage level to U1104B pin 3 via R1117. R1136 to the -7.5 V from pin 3 provides a fixed offset to the signal level. The negative-peak detector does the same type of operation on the signal to apply the negative peak voltage to pin 5 of U1104B.

When the sync polarity is selected to match the sync of the applied video signal (by the user with the A SLOPE switch), the voltage level at the selected input of U1104B is at the middle of the sync-tip voltage. If the wrong polarity is selected, triggering will take place on the video signal. For signal generator signals, the effect may not be noticeable, except for a shift of the trigger point; but if composite video signals are being viewed, the display will be unstable when the wrong polarity is selected.

SYNC COMPARATOR. The incoming composite video signal is applied to the plus input (pin 3) of the Video Sync Comparator (U1102A). The Video Sync Comparator looks at the signal level on pin 2 and compares it with the incoming video signal level. When the incoming level crosses the comparison threshold, the output of U1102A switches state. That state change occurs at the mid level of the sync pulses. The output signal of U1102A (TV LINE) is applied directly to U1104A pin 2 and U1106C pin 1 to be available for selection for the A and the B Trigger systems for TV LINE triggering.

FIELD SYNC FILTER. The filter circuit composed of R1132, R1133, C1106, C1107, and U1102B processes the output of U1102A further to determine when the vertical field sync signal is present. The time constant of the filter elements is such that the line sync pulses between vertical fields

cannot move the voltage on U1102B pin 5 across the comparison threshold (ground on pin 6).

During the vertical field sync pulse, the frequency of the serration pulses (line and equalizing) doubles. The filter capacitors will then be discharged enough to go below ground and switch the output state of U1102B. That signal is applied to U1104A pin 1 to be available as the TV FIELD Sync trigger signal for the A Trigger system.

SYNC SWITCHING. Solid-state switches U1104A and U1106C provide switching between the TV FIELD and the TV LINE signal for the A Trigger and between TV LINE from A SOURCE and the average DC level of the measurement channel for the B Trigger. The switching states are controlled by the Measurement Processor via the TV FIELD SEL and the B TV TRIG EN control signals from the Auxiliary Control Register (U1103).

DISPLAY AND TRIGGER LOGIC AND PROCESSOR INTERFACE (Diagram 4)

The Display Sequencer or SLIC (slow-logic integrated circuit, U600) performs most of the slow logic functions required to run the display functions. This integrated circuit contains a microprocessor interface, the display sequencer logic circuitry, the trigger holdoff timer, the chop clock, and an interface to the on-screen readout control logic.

The microprocessor interface of U600 provides the capability to serially load the internal control register, write the internal read/write memory, do some limited real-time control over a few sequencer functions, and monitor status information.

The Display Sequencer contains a read/write memory for storing the display states to be sequenced through and logic for sequencing the A and B Sweep displays and trigger sources. The sequencer also provides control signals that are needed to do waveform measurements.

An internal trigger holdoff timer provides a pulse with programmable width that is triggered on at the end of A Sweep (or at the end of B Sweep). The pulse width may be set from 1 μs to greater than 0.5 s, depending on the internal counter divide ratio, and the holdoff oscillator frequency at pin 15.

The chop clock circuit generates a phase-dithered chop clock and blanking signal, derived from an external frequency source. With 10 MHz applied, the chop rate can be 1.25 MHz or 625 kHz, with a blanking time of about 200 ns (625 kHz is used in the 2246 1Y and 2246 Mod A).

The readout interface circuit responds to the readout request and readout blanking inputs, and generates a blanking signal (BLANK, pin 18) to control the Z-Axis Amplifier enabling signals from U602. The chop blanking signal also gets routed through this circuit.

Pin Description

The following is a description of Display Sequencer U600 pin functions (see Figure 3-1 for pin numbers).

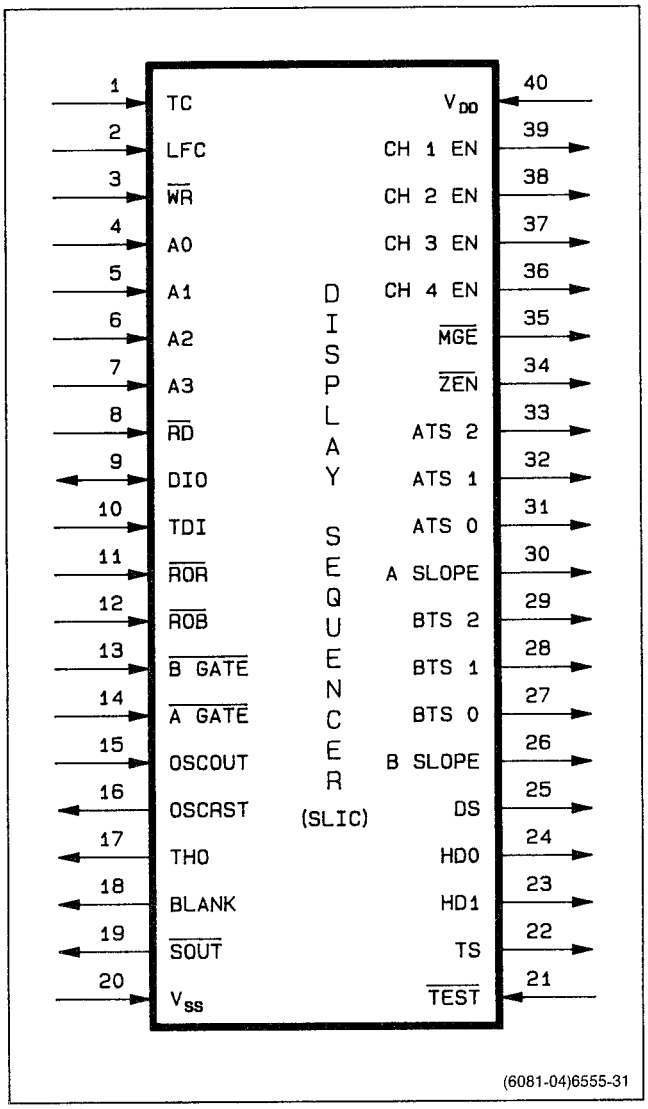

Figure 3-1. Display Sequencer IC (SLIC, U600) pin-out diagram.

DIO: Data IO pin. This pin is tied to the Measurement Processor MB DATA line. Data to be clocked into the control register is presented here, and status data can be read out on this pin when the $\overline{RD}$ input is low (tri-state output). See Table 3-7.

TDI: Trigger data input pin. When A3=A2=1, data on this pin is sent to the DIO pin (when $\overline{RD}$ is low).

$\overline{RD}$: Read enable input (active low). Bringing this pin low causes internal status data (selected with A3-A0) to be presented on the DIO pin for transfer to the Measurement Processor.

$\overline{WR}$: Write enable input (active low). A negative-going pulse on this pin performs actions described in the Table 3-7.

$\overline{SOUT}$: Strobe output pin (active low). When A3, A2, A1, and A0 = 1111, $\overline{SOUT}$ goes low when the $\overline{WR}$ pin is pulled low. Otherwise, $\overline{SOUT}$ is always high.

A3, A2, A1, A0: Address inputs. The ADDR0-ADDR3 selection bits are latched from the Measurement Processor address bus by U2512, Diagram 8.

$\overline{A\ GATE}$: A Sweep Gate input (active low).

$\overline{B\ GATE}$: B Sweep Gate input (active low).

TC: Timing clock input.

LFC: Low-frequency clock input. A signal derived from the calibrator circuit is used for skewing the chop-clock phase.

$\overline{ROR}$: Readout request input (active low). A low causes the CH 1 EN, CH 2 EN, CH 3 EN, CH 4 EN, HD1, HD0, and TS outputs to all go low, and allows the $\overline{ROB}$ input to have complete control of the BLANK output. If $\overline{ROB}$ is low when $\overline{ROR}$ goes low, then the internal timing will be such that the BLANK output will go high quickly enough to blank the display before switching transients can be shown on screen (see the detailed description of the readout interface).

$\overline{ROB}$: Readout blank input (active low). During readout active time ($\overline{ROR}$=low), the $\overline{ROB}$ input is inverted and sent to the BLANK output.

OSC OUT: The external holdoff oscillator output drives this pin. A falling edge causes the internal holdoff counter to increment.

OSC RST: Oscillator reset output. Internal logic causes this output to go high to discharge the external holdoff oscillator timing capacitor at the end of holdoff (see detailed description of the holdoff timer operation).

CH 1 EN: Channel 1 enable output (active high).

CH 2 EN: Channel 2 enable output (active high).

CH 3 EN: Channel 3 enable output (active high).

CH 4 EN: Channel 4 enable output (active high).

Table 3-7

Display Sequencer (U600) Control Bit Assignments

A3	A2	A1	A0	DIO when $\overline{RD}$ LO	Action when $\overline{WR}$ Strobed
0	0	0	0	Control Reg. msb	DIO clocked into Control Reg. (a)
0	0	0	1	RAM comparator	RAM written from Control Reg.
0	0	1	0	EOSS flag	RAM address incremented (b)
0	0	1	1	EOS signal (c)	RESET is strobed (d)
0	1	0	0	A Gate Detect flag	MRESET is strobed (e)
0	1	0	1	B Gate Detect flag	RAM load mode enabled (f)
0	1	1	0	A Gate Detect flag	A/B GATE-detected flags reset
0	1	1	1	B Gate Detect flag	Set A slope output (g)
1	0	0	0	(h)	Forces B1/B2 Source/Slope/Delay (i)
1	0	0	1	(h)	Forces B Slope output (j)
1	0	1	0	(h)	Sets BLANK output HI (k)
1	0	1	1	(h)	Sets THO output HI (k)
1	1	0	0	TDI data	(see description of $\overline{TEST}$ input)
1	1	0	1	TDI data	(see description of $\overline{TEST}$ input)
1	1	1	0	TDI data	Sets norm B Source/Slope/Delay (l)
1	1	1	1	TDI data	$\overline{SOUT}$ pin gets strobed

Notes:

(a) Data is clocked into the control register on the rising edge of $\overline{WR}$.

(b) RAM load mode must be enabled; the address increments on the rising edge of $\overline{WR}$.

(c) EOS (end of sequence) goes high for the last state of any display sequence. EOS is read out for test purposes.

(d) The THO output should be set high when RESET is strobed for proper initialization. This does the following:

a. It initializes the display sequencer back to the first display state (RAM address 000). In ALT VERT Mode, all vertical enable, horizontal enable, and trig source outputs are initialized. In CHOP VERT Mode, the horizontal enable and trig source outputs are initialized, but the vertical enable outputs continue to cycle at the chop clock rate.

b. It resets the EOSS (end of single sequence) flag.

c. It resets the trigger holdoff timer.

(e) Used for initialization, during testing of the device.

(f) A rising edge on $\overline{WR}$ with DIO = 1 enables the RAM load mode; a rising edge on $\overline{WR}$ with DIO = 0 disables the RAM load mode.

(g) A rising edge on $\overline{WR}$ with DIO = 1 sets the A Slope output high; a rising edge on $\overline{WR}$ with DIO = 0 sets the A Slope output low.

(h) Used for device testing only.

(i) A rising edge on $\overline{WR}$ with DIO = 1 forces the B1 Trigger Source, the B1 Slope, and sets the DS output high; a rising edge on $\overline{WR}$ with DIO = 0 forces the B2 Trigger Source, the B2 Slope, and sets the DS output low.

(j) A rising edge on $\overline{WR}$ with DIO = 1 forces the B SLOPE output high; a rising edge on $\overline{WR}$ with DIO = 0 forces the B SLOPE output low. This forcing function takes precedence over the force B1/B2 Source/Slope/Delay feature described in note (i) above. This forcing function is canceled by applying a negative strobe to the $\overline{WR}$ input with the address = 1110.

(k) A rising edge on $\overline{WR}$ with DIO = 1 sets the output high; a rising edge on $\overline{WR}$ with DIO = 0 allows the output to behave normally.

(l) A negative pulse on $\overline{WR}$ with address = 1110 will cancel the effects of (i) above and allow the B Source, B Slope, and DS outputs to behave normally.

ATS 2, ATS 1, ATS 0: A Trigger Source Select outputs. These bits either correspond to three bits of the control register, or they track with the vertical channel enable outputs (in ALT Vertical Mode with VERT MODE trigger selected). These outputs change state on the rising edge of the THO output, or when RESET is strobed while THO is high. The encoding scheme is shown in Table 3–8.

Table 3–8
A Trigger Source Select Bits

ATS 2	ATS 1	ATS 0	SOURCE
0	0	0	CH 1
0	0	1	CH 2
0	1	0	CH 1 + CH 2
0	1	1	CH 3
1	0	0	CH 4
1	0	1	Line

A SLOPE: A Trigger slope output.

BTS 2, BTS 1, BTS 0: B Trigger Source Select outputs. These bits correspond to either one of two sets of three bits in the control register, or they can track with the vertical channel enable outputs (in ALT Vertical MODE). These outputs normally change state on the rising edge of the THO output, or when RESET is strobed while THO is high. If B1 or B2 Source/Slope/Delay is being forced, the outputs will correspond directly with one of the two three-bit sets in the control register. The encoding scheme matches that used for the A trigger source select bits shown in Table 3–8.

B SLOPE: B Trigger Slope output. This output is set to either one of two bits in the control register. This output normally changes state on the rising edge of the THO output, or when RESET is strobed while THO is high. It may also be forced high or low by the Measurement Processor via the processor interface.

HD1, HD0: Horizontal display enable outputs. These outputs normally change state on the rising edge of the THO output, or when RESET is strobed while THO is high. The encoding scheme is shown in Table 3–9.

Table 3–9
Horizontal Display Mode Select Bits

HD1	HD0	SOURCE
0	0	Readout displayed
0	1	A Sweep displayed
1	0	B Sweep displayed
1	1	X–Y mode

DS: Delay select output. This output normally changes state on the rising edge of the THO output, or when RESET is strobed while THO is high. It may also be forced by the Measurement Processor via the processor interface. DS high selects the first delay (B1), and DS low selects the second delay (B2).

TS: Trace separation output. This output changes state on the rising edge of the THO output, or when RESET is strobed while THO is high. TS goes high to enable trace separation; TS goes low during a readout request cycle.

$\overline{\text{ZEN}}$: Z–Axis enable output (active low). This output goes low when the ZAP control bit is set high, or when the selected B trigger source channel (as presented on the BTS 2, BTS 1, and BTS 0 output pins) is the same as the channel being enabled for display.

$\overline{\text{MGE}}$: Measurement gate enable output (active low). This output behaves the same way as $\overline{\text{ZEN}}$, except in chop vertical mode, in which MGE stays in a low state. Also, the ZAP control bit has no effect on MGE.

THO: Trigger holdoff output (active high). Outputs the variable holdoff pulse. In single sequence mode, this output will go high after the last A Sweep of the sequence and stay high until RESET is strobed. This output may also be forced high via the Measurement Processor interface.

BLANK: This output is controlled from three sources. At the end of a readout request cycle (when $\overline{\text{ROR}}$ goes high), the BLANK output will be asserted for four to six timing clock periods (to hide vertical source switching transients). Chop blanking pulses can be routed to this output (however, when $\overline{\text{ROR}}$ is low, chop blanking is automatically

inhibited). Lastly, this output may be forced high via the Measurement Processor interface.

$\overline{\text{TEST}}$: Test mode enable input (active low). $\overline{\text{TEST}}$ is held high and not used in normal operation. This pin is pulled high to force normal operation, but may be pulled low to enable the test mode. Enabling test mode does the following:

1. Disables single sequence and B Ends A modes, no matter what code is in the control register.
2. Reconfigures the trigger holdoff timer to make it more easily testable (see control register description for control bits H4–H0).
3. A3, A2, A1, A0 = 1100 allows a negative-going pulse on $\overline{\text{WR}}$ to reset only the control register.
4. A3, A2, A1, A0 = 1101 allows a negative-going pulse on $\overline{\text{WR}}$ to preset control register bits B1–B6.

Control Register Description

The Display Sequencer internal control register is a 26-bit, serial-shift register that receives control-bit data from the Measurement Processor. Table 3-10 lists the control signal name(s) associated with each register bit. Bit number 1 receives the data from the DIO pin (via the Processor Interface) after one low-to-high transition on the $\overline{\text{WR}}$ input pin (A3 = A2 = A1 = A0 = 0). Bit number 26 receives this data after 25 more low-to-high transitions on the $\overline{\text{WR}}$ input. Bit number 26 is the most-significant bit position of the internal shift register.

RD5–RD0: Data inputs to the internal RAM. The RAM address comes from a three-bit, binary up-counter. To write data into the RAM, the first six bits are loaded into the control register with the RAM data word. With A3, A2, A1, A0 = 0001, a negative-going pulse on the $\overline{\text{WR}}$ input will write the data into RAM. To set the RAM address, the RAM load mode must be enabled. In RAM load mode, a low-to-high transition on the $\overline{\text{WR}}$ input (with A3, A2, A1, A0 = 0010) will increment the RAM address by one. There are eight consecutive RAM locations (addresses 000 to 111); the address counter will increment to 111, then wrap around to 000. Strobing RESET resets the counter to 000. See the Display Sequencer detailed description to find out what the RAM outputs do.

Table 3-10
Shift Register 1 Control Bit Data

Bit Nr	Control Signal Name(s)		
1	AS2	RD5	AC3
2	AS1	RD4	AC2
3	AS0	RD3	AC1
4	ZAP	RD2	
5	B1S2	RD1	BC3
6	B1S1	RD0	BC2
7	B1S0		BC1
8	B1SLOPE		BC0
9	B2S2		
10	B2S1		
11	B2S0		
12	B2SLOPE		
13	VM1		
14	VM0		
15	HM1		
16	HM0		
17	DD		
18	SSE		
19	B ENDS A		
20	H4		
21	H3		
22	H2		
23	H1		
24	H0		
25	FSEL		
26	CBEN		

The RD5–RD0 bits also go to the inputs of an internal RAM comparator. The RAM outputs are sensed by the other comparator input. If the two inputs match, the comparator output will be high. The RAM comparator output can be read by the Measurement Processor through the processor interface.

AC3–AC1: The A Trigger CPLG select bits. BC3–BC0 are the B Trigger CPLG and SLOPE select bits. To write these bits into the trigger coupling circuits, the Measurement Processor loads the control register as follows: Bits 1, 2, and 3 are set to AC3, AC2, and AC1 respectively, and the A SLOPE output is set to AC0. Bits 5, 6, 7, and 8 are set to BC3, BC2, BC1, and BC0 respectively. The RAM load mode is enabled, the force

mode is enabled, the force B1/B2 feature is disabled, and THO is strobed once (or RESET is strobed once while THO is high). At this point, output pins ATS2, ATS1, ATS0, and A SLOPE are set to AC3, AC2, AC1, and AC0 respectively; and output pins BTS2, BTS1, BTS0, and B SLOPE are set to BC3, BC2, BC1, and BC0 respectively. The Measurement Processor then strobes the latches in the Trigger Coupling Select Logic circuits to make the trigger coupling selections. The RAM load mode is then disabled to resume normal Display Sequencer operation.

AS2, AS1, AS0: A Trigger SOURCE select bits. See Table 3-11 for the bit encoding of the control signals when not loading the RAM or coupling circuits.

Table 3-11
Trigger Source Select

AS2	AS1	AS0	SOURCE
0	0	0	CH 1
0	0	1	CH 2
0	1	0	CH 1 + CH 2
0	1	1	CH 3
1	0	0	CH 4
1	0	1	Line
1	1	0	--
1	1	1	VERT MODE

For any binary code except 111; AS2, AS1, and AS0 are presented on output pins ATS2, ATS1, and ATS0 respectively after a THO rising edge. For binary code 111, the data on the three output pins will correspond to the channel being enabled for display; it alternates as the channel displays alternate and change state on the rising edges of THO. The RAM load mode is disabled to get the A Trigger SOURCE to alternate.

ZAP: Setting this bit high forces the $\overline{\text{ZEN}}$ output low. This bit is low to allow normal operation of the $\overline{\text{ZEN}}$ output.

B1S2, B1S1, B1S0: B1 Trigger SOURCE select bits. Bit encoding is the same as the encoding for the A Trigger SOURCE select bits.

B2S2, B2S1, B2S0: B2 Trigger SOURCE select bits. Encoded the same as A Trigger SOURCE select bits, except that code 111 does not select VERT Mode trigger. Selection between B1 SOURCE and B2 SOURCE is normally made with the DS (delay select) output signal. DS = 1 selects B1, and DS = 0 selects B2. If the B1 select bits are 111 and the B1 SOURCE is selected (not forced), then the data on output pins BTS2, BTS1, and BTS0 will track with the selected vertical channel (similar to the A Trigger SOURCE select outputs).

B1 SLOPE, B2 SLOPE: B Trigger SLOPE bits. One of these two bits is presented on the B SLOPE output pin (if B SLOPE isn't being forced), in the same way that the B1 and B2 sources are selected. When B1 SOURCE is selected, then B1 SLOPE is also selected, and B2 SLOPE gets selected when B2 SOURCE is selected.

VM1, VM0: Vertical MODE control bits. See Table 3-12 for encoding.

Table 3-12
Vertical MODE Select

VM1	VM0	MODE
0	0	Not used
0	1	Chop Mode
1	0	Alt Mode (with no measurement)
1	1	Alt Mode (with measurement)

HM1, HM0: Horizontal MODE control bits. See Table 3-13 for encoding.

Table 3-13
Horizontal MODE Select

HM1	HM0	MODE
0	0	A only
0	1	ALT
1	0	B only
1	1	X-Y

Table 3–14

Holdoff Counter Encoding

H4	H3	H2	H1	H0	Count Length	H4	H3	H2	H1	H0	Count Length
0	0	0	0	0	1	1	0	0	0	0	10000
0	0	0	0	1	2	1	0	0	0	1	20000
0	0	0	1	0	5	1	0	0	1	0	50000
0	0	0	1	1	5	1	0	0	1	1	50000
0	0	1	0	0	10	1	0	1	0	0	100000
0	0	1	0	1	20	1	0	1	0	1	200000
0	0	1	1	0	50	1	0	1	1	0	500000
0	0	1	1	1	50	1	0	1	1	1	500000
0	1	0	0	0	100	1	1	0	0	0	100000
0	1	0	0	1	200	1	1	0	0	1	200000
0	1	0	1	0	500	1	1	0	1	0	500000
0	1	0	1	1	500	1	1	0	1	1	500000
0	1	1	0	0	1000	1	1	1	0	0	100000
0	1	1	0	1	2000	1	1	1	0	1	200000
0	1	1	1	0	5000	1	1	1	1	0	500000
0	1	1	1	1	5000	1	1	1	1	1	1[a]

[a] Strobing RESET presets the holdoff counter to 499999 to simplify testing.

DD: Dual-delay control bit. DD = 1 for dual delay (delta time), and DD = 0 for single delay.

SSE: SGL SEQ enable. SSE = 1 for single sequence mode or 0 for repetitive mode.

B ENDS A: B ends A enable (active high).

H4, H3, H2, H1, H0: Holdoff time. Encoded as in Table 3–14. With the $\overline{\text{TEST}}$ pin held high for normal operation.)

FSEL: Chop frequency select bit. With 10 MHz on the TC input pin, FSEL = 1 provides a chop frequency of 625 kHz; FSEL = 0 produces 1.25 MHz (625 kHz is used).

CBEN: Chop blank enable bit. CBEN = 1 allows the chop blanking signal to be passed out the BLANK output pin (when $\overline{\text{ROR}}$ is high); CBEN = 0 inhibits chop blanking.

Display Sequencer Operation

The internal RAM is programmed for the desired vertical channel display sequence, for both CHOP and ALT Vertical Modes. In ALT mode, the RAM also controls the horizontal display control outputs. In CHOP mode, the RAM still controls the vertical channel displays, but different logic controls the horizontal display selection.

RAM data bits RD5, RD4, and RD3 are programmed for a particular channel display (see Table 3–15).

Table 3-15
Display Sequencer Channel Select Logic Bits

RD5	RD4	RD3	Channel
0	0	0	CH 1
0	0	1	CH 2
0	1	0	CH 1 + CH 2
0	1	1	CH 3
1	0	0	CH 4

Bit RD2 selects between the A Sweep display and the B Sweep display (only used in ALT Vertical Mode (with measurement). The A Sweep is displayed if this bit is set high (outputs HD1, HD0 = 01), otherwise the B Sweep is displayed (outputs HD1, HD0 = 10). Bit RD1 controls the DS (delay select) output pin in ALT Vertical Mode (with or without measurement). Finally, bit RD0 marks the last state in a display sequence. When the RD0 bit goes high, the sequencer finishes its current state and jumps back to the initial state (RAM address 000 is the initial state). In ALT Vertical Mode, the sequencer will advance to the next state either on each rising edge of the trigger holdoff pulse (ALT Vertical Mode with measurement), or on every other rising edge of the trigger holdoff pulse (ALT Vertical Mode with no measurement).

The first type of ALT Mode is used when there is an intensified zone (with or without an accompanying B Sweep) for only one or two of the displayed channel(s); every display state can be completely specified by programming the RAM properly (no more than eight display states are ever needed for any measurement display sequence; hence, the RAM is limited to eight addresses). The second type of ALT Mode is used when there are intensified zones and B Sweeps for all channels displayed. In this mode, HD1 and HD0 automatically alternate between the A sweep and the B Sweep on each rising edge of the trigger holdoff pulse. Whenever HD1 and HD0 switch from the B Sweep back to the A Sweep, the vertical sequencer advances to its next state. This second type of ALT Vertical Mode is used only when more than eight RAM locations are needed to define a long display sequence in ALT Horizontal Mode.

In ALT Vertical Mode, the vertical and horizontal display enable outputs are initialized as follows: the trigger holdoff output is forced high (via the processor interface), RESET is strobed, then trigger holdoff is unforced to allow sweeps to occur. This procedure ensures that the display enable and trigger source outputs are initialized to the first state of the programmed display sequence.

In CHOP Vertical Mode, the leading edge of the chop blanking pulses advance the vertical display enable outputs. RAM bits RD5, RD4, and RD3 still determine the vertical channel displayed, and RAM bit RD0 marks the last display state in the sequence. RAM bits RD2, and RD1 are not used in CHOP Mode. Other circuitry, clocked by the trigger holdoff pulse, drives the horizontal display control outputs. The same initialization procedure as described above for ALT Vertical Mode is used. However, only the trigger source and horizontal display enable outputs are initialized. The vertical-display-enable outputs cycle at the CHOP rate. Table 3-16 specifies the behavior of the horizontal- display-enable outputs for all horizontal and vertical modes.

Trigger Holdoff Timer

When the B ENDS A control bit is low, the holdoff timer is triggered by the rising edge of $\overline{\text{A GATE}}$. When the B ENDS A control bit is high, the holdoff timer is triggered by either the rising edge of $\overline{\text{B GATE}}$, or the rising edge of $\overline{\text{A GATE}}$, whichever occurs first. The THO output pin will go high immediately, and go low after the programmed number of holdoff oscillator cycles. In SGL SEQ Mode (again, with the $\overline{\text{TEST}}$ input pin high), the EOSS (end of single sequence) flag will go high and the THO output will stay high after the last A Sweep of the programmed sequence. Strobing RESET will reset the EOSS flag, and set the THO output back low again, if THO hasn't been forced high via the Measurement Processor interface.

HOLDOFF OSCILLATOR. A relaxation oscillator circuit formed by U601, Q600, Q601 and associated components is connected between the OSC OUT and OSC RST pins to provide the input count pulses to the holdoff timer. The HOLDOFF voltage applied to the base of Q600 sets up a charging current into timing capacitor C600. When the holdoff timer is inactive, the OSC RST output pin is high, and C600 is held discharged. With the capacitor discharged, the output of the oscillator is held high. When a rising edge of $\overline{\text{A GATE}}$ (or $\overline{\text{B GATE}}$ in B ends A mode) occurs, the OSC RST output will go low and allow the voltage across C600 to ramp up. When this voltage crosses an upper threshold, the output of U601 at pin 7 goes low. This negative transition increments the internal holdoff counter, and causes the OSC RST output to go high, again discharging C600. When the voltage drops below a lower threshold, the oscillator output again goes high to repeat the oscillation cycle. After the last negative transition on the OSC OUT pin for a particular count length, the OSC RST output will go high and stay there until the next time the THO timer is triggered.

Table 3-16

Horizontal and Vertical Display Response

Delay and Vertical Modes			Signal Names	HORIZONTAL CONTROL SIGNAL OUTPUTS				Readout Active ($\overline{ROR}$ = 0)
				Readout Inactive ($\overline{ROR}$ = 1)				
				Horizontal Modes (HM1 HM0)				
DD	VM1	VM0		A Only (0 0)	A Alt B (0 1)	B Only (1 0)	X/Y (1 1)	
0	0 or 0	0 or 1	NSSS (a)	1	2	1	(b)	(c)
			DS	HI	HI	HI	HI	(c)
			HD0	HI	(d)	HI	LO	LO
			HD1	LO	$\overline{HD0}$	HI	HI	LO
			TS	LO	HD1	LO	LO	LO
1	0 or 0	0 or 1	NSSS (a)	2	4	2	(b)	(c)
			DS	(d)	(e)	(d)	LO	(c)
			HD0	HI	(d)	LO	HI	LO
			HD1	LO	$\overline{HD0}$	HI	HI	LO
			TS	LO	HD1	LO	LO	LO
0	1	0	NSSS (a)	(f)	(f)	(f)	(b)	(c)
			DS	HI	HI	HI	HI	(c)
			HD0	HI	(d)	LO	HI	LO
			HD1	LO	$\overline{HD0}$	HI	HI	LO
			TS	LO	HD1	LO	LO	LO
0	1	1	NSSS (a)	(g)	(g)	(g)	(b)	(c)
			DS	HI	HI	HI	HI	(c)
			HD0	HI	(h)	LO	HI	LO
			HD1	LO	$\overline{HD0}$	HI	HI	LO
			TS	LO	HD1	LO	LO	LO
1	1	0	NSSS (a)	(f)	(f)	(f)	(b)	(c)
			DS	(i)	(i)	(i)	(i)	(c)
			HD0	HI	(h)	LO	HI	LO
			HD1	LO	$\overline{HD0}$	HI	HI	LO
			TS	LO	HD1	LO	LO	LO
1	1	1	NSSS (a)	(g)	(g)	(g)	(b)	(c)
			DS	(h)	(h)	(h)	(h)	(c)
			HD0	HI	(h)	LO	HI	LO
			HD1	LO	$\overline{HD0}$	HI	HI	LO
			TS	LO	HD1	LO	LO	LO

NOTES:

(a) NSSS = Complete A Sweep cycles in a single sequence.

(b) Not applicable in single sequence mode.

(c) Signal state not affected by readout.

(d) Signal changes state after each rising edge of THO; initialized to a high state in single sequence mode.

(e) Signal changes state after every other rising edge of THO; it is initialized to a high state in SGL SEQ mode.

(f) NSSS = Two times the number of states programmed into the vertical sequencer. In ALT Vertical Mode with no measurement, the vertical sequencer advances to its next state at the end of every other A GATE.

NOTES (cont):

(g) NSSS = The number of states programmed into the vertical sequencer.
(h) Programmable with the vertical sequencer.
(i) Programmable with the vertical sequencer. There are two A Sweeps per vertical display state.

Sweep Gate Detection

Display Logic IC U600 also contains sweep gate detect latches that can be read out and reset via the Measurement Processor interface. The A GATE detect latch output will go high on the rising edge of $\overline{\text{A GATE}}$ after a falling edge of $\overline{\text{A GATE}}$, if the $\overline{\text{MGE}}$ signal is low (i.e., the latch is armed by $\overline{\text{MGE}}$). The B GATE detect latch output goes high when $\overline{\text{B GATE}}$ goes low (level sensitive). The A GATE latch is reset on the leading edge of the A/B RESET signal, so that the latch will not miss an A GATE occurring before the end of the latch reset interval. The B GATE latch resets when the A/B RESET signal is low.

Chop Clock

The clock frequency applied to the TC input pin is either divided by 8 (FSEL = 0), or divided by 16 (FSEL = 1), producing a positive-going pulse at the BLANK output pin (when enabled) with a width equal to about two times the period of the clock signal on the TC input. To produce phase skewing, the chop frequency divider circuit is forced to skip ahead by four TC clock periods on a rising edge of $\overline{\text{A GATE}}$. This skipping is gated on and off by applying a low-frequency clock signal (about 1 kHz from the Calibrator circuit) to the LFC (low-frequency clock) input pin. Internally, the LFC signal is divided by two, and when the resulting square wave is high, count skip-ahead is enabled.

Readout Interface

The Readout Interface accepts inputs from the $\overline{\text{ROR}}$ and $\overline{\text{ROB}}$ pins, and drives the BLANK output pin. When $\overline{\text{ROR}}$ is high, the BLANK output is controlled by the chop blank signal (when enabled by the CBEN control bit).

When the $\overline{\text{ROR}}$ input is low, chop blanking is disabled and the $\overline{\text{ROB}}$ input is inverted and allowed to control the BLANK output. When the $\overline{\text{ROR}}$ input goes from low to high, the BLANK output remains connected to the readout blank signal for an additional four to six TC clock periods. Normally, the $\overline{\text{ROB}}$ input will be low during this time so that the BLANK output will be high to mask vertical source-switching transients. The HD1, HD0, and TS outputs are disabled two to four TC periods after $\overline{\text{ROR}}$ goes low, and are again enabled two TC periods before the BLANK output is disconnected from the readout blank signal ($\overline{\text{ROB}}$). For any readout request cycle, the $\overline{\text{ROR}}$ input remains low for greater than six TC clock periods. Relative timing of $\overline{\text{ROR}}$, BLANK, HD0 and HD1 (HDx), TS, and vertical channel enables (CH x EN) is shown in Figure 3–2.

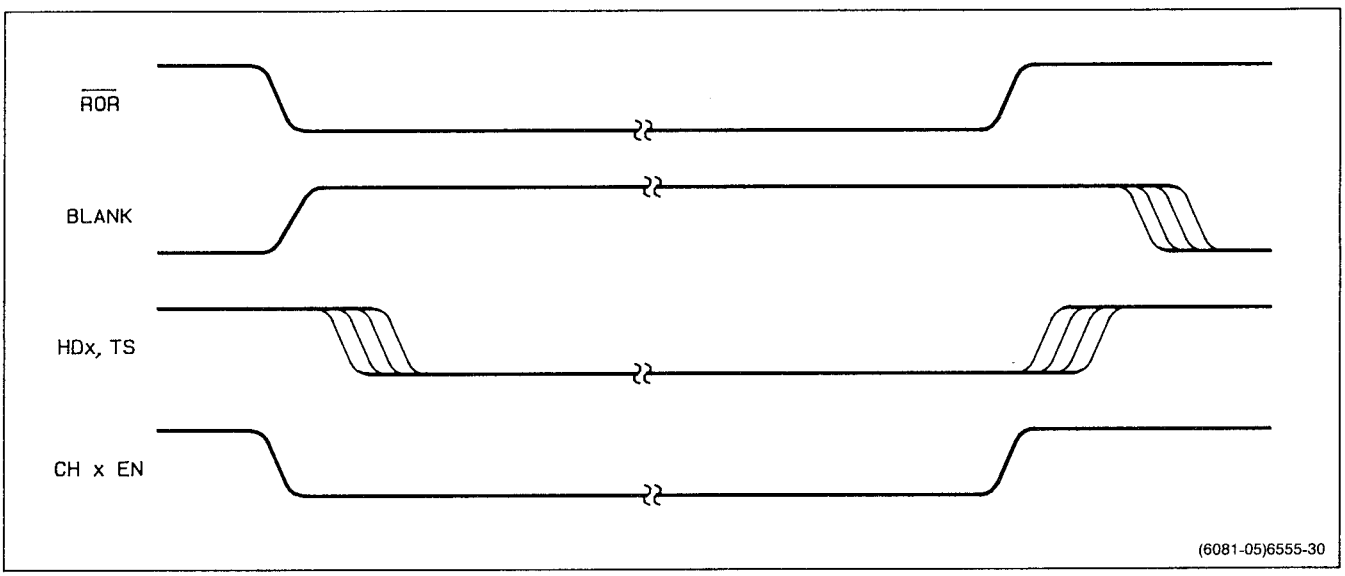

Figure 3–2. Readout interface relative signal timing.

Trigger Logic IC (FLIC)

The Trigger Logic IC or FLIC (fast-logic integrated circuit, U602 Diagram 4) does most of the fast logic functions required to run the oscilloscope. The functions are: A Sweep control, B Sweep control and measurement gate generation, Z-Axis control, and trigger status detection.

The A Sweep logic generates the A Sweep gate signal (A GATE), and provides trigger status information about the state of the A Trigger. The B Sweep logic interfaces to the Delay Time Comparators (Diagram 3) and generates the B Sweep gate (B GATE) and measurement gate signals. There is also some logic that monitors the B Trigger signal status when making voltage measurements with the B Trigger circuit. The Z-Axis control logic provides outputs for controlling the crt beam intensity.

The Trigger Logic circuit is done in an ECL (emitter-coupled logic) gate array, and all inputs and outputs are compatible with standard ECL components.

Pin Description

The following is a description of the fast logic pin outs (see Figure 3-3).

BLANK: Blanking input, from the Display Logic IC (U600).

HD1, HD0: Horizontal display select inputs, from the Display Logic IC.

$\overline{ZEN}$: Z-Axis enable input, from the Display Logic IC. Active low.

$\overline{BUSY}$: Counter busy signal. Not used in the 2246 1Y and 2246 Mod A.

ATRIG: A Sweep trigger input.

EOAS: End of A Sweep. This signal goes high when the A Sweep ramp crosses its end-of-sweep threshold.

THO: Trigger holdoff input from the Display Logic IC.

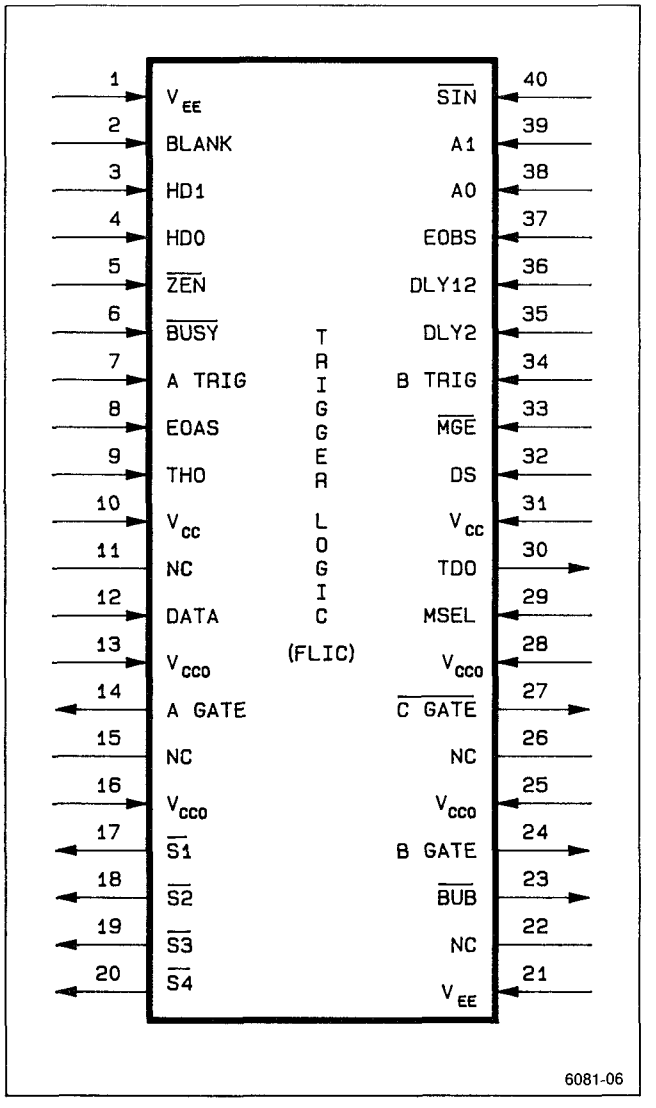

Figure 3-3. Trigger Logic IC (FLIC, U602) pin-out diagram.

$\overline{SIN}$: Strobe input. Latches data into the internal register. Active low.

A1, A0: Address inputs. See Table 3-17 for addressing codes.

EOBS: End of B Sweep. This signal goes high when the B Sweep ramp crosses its end-of-sweep threshold.

DLY12: Input from first delay comparator. The comparator for the delay input switches from low to high after the end of either the first or the second sweep delay.

DLY2: Input from second delay comparator. This comparator normally switches from low to high after the end of the second sweep delay (in dual-delay mode).

B TRIG: B Sweep trigger input.

$\overline{\text{MGE}}$: Measurement gate enable input from the Display Logic IC. Active low.

MSEL: Measurement select input. MSEL=1 causes the DLY12 signal rising edges to sample the B TRIG input in strobed volts measurements. MSEL=0 selects the DLY2 signal rising edges.

DS: Delay select signal from the Display Logic IC. DS=1 selects first delay.

DATA: Data input to the internal, control shift register.

$\overline{\text{S1}}$: Crt beam-intensity control output. Turns on the beam current for the A Sweep displays. Active low.

$\overline{\text{S2}}$: Crt beam-intensity control output. Turns on the beam current for the B Sweep displays. Active low.

$\overline{\text{S3}}$: Crt beam-intensity control output. Turns on the beam current for the A Sweep intensified zone displays. Active low.

$\overline{\text{S4}}$: Crt beam-intensity control output. Turns on the beam current for the Readout displays. Active low.

A GATE: A Sweep gate output. Starts the A Sweep ramp. Active high.

TDO: Trigger data output. Data to be read is selected via the A1 and A0 inputs (see Table 3-17).

B GATE: B Sweep gate output. Starts the B Sweep ramp. Active high.

$\overline{\text{BUB}}$: B Sweep unblanking output. Active low.

$\overline{\text{C GATE}}$: Measurement gate output. Not used externally in the 2246 1Y and 2246 Mod A.

Table 3-17

Trigger Logic IC Addressing Logic

A1	A0	Output of TDO pin	Action when $\overline{\text{SIN}}$ Strobed
0	0	Strobed Volts Latch	DATA clocked into Control Reg
0	1	Auto baseline Latch	Resets Auto baseline Latch
1	0	A Trigger Latch	Resets A Trigger Latch
1	1	Peak Volts Latch	Resets Peak Volts Latch

Trigger Logic IC Control Register Description

The control register of U602 is an 8-bit shift register that receives input from the DATA pin. Bit 1 receives the data on a low-to-high transition on the $\overline{\text{SIN}}$ pin (A1 = A0 = 0). Bit 8 receives this data after seven more low-to-high transitions on the $\overline{\text{SIN}}$ pin. Bit 8 is the most significant bit of the control register. Table 3-18 lists the control signal name associated with each control register bit.

DM1, DM0: These bits select the delay mode (see Table 3-19).

BRUN: This bit determines whether the B Sweep is in RUNS AFTER delay mode or Triggered After delay mode. BRUN=1 selects RUNS AFTER Mode.

PM1, PM0: These bits select the peak volts detection mode as shown in Table 3-20.

Table 3-18
Control Register Signal-bit Names

Bit	Name
1	DM0
2	DM1
3	BRUN
4	PM0
5	PM1
6	ZM0
7	ZM1
8	ARUN

Table 3-19
Delay Mode Selection Control Bits

DM1	DM0	Delay Mode
0	0	First delay set to zero
0	1	First and second delays set to zero
1	0	Normal delay mode
1	1	B Sweep disabled

Table 3-20
Peak Volts Detection Mode Logic

PM1	PM0	Peak Detection Mode
0	0	Nongated
0	1	Gated from end of delay to end of A Sweep
1	0	Gated with $\overline{\text{C GATE}}$[a]
1	1	Gated with A GATE

[a] $\overline{\text{C GATE}}$ not used externally in 2246A.

ZM1, ZM0: These bits determine the intensified zone mode. See the Z-Axis logic discussion.

ARUN: This bit determines whether the A Sweep is in the free-run mode or in the triggered mode. ARUN=1 selects the free-run mode.

A Sweep Logic

When ARUN is high, the A Sweep logic works as follows. A high on the THO input causes the A GATE output to go low. As soon as THO goes low, the A GATE output will go high and the A Sweep runs. At the end of the A Sweep there is a low-to-high transition on the EOAS input. That sets the the internal end-of-A-sweep latch causing the A GATE output to go low, and the A Sweep shuts off. This state exists during sweep retrace and the baseline stabilization period until the end of holdoff when the THO input once again goes high. That resets the end-of-A-sweep latch and starts another A Sweep cycle. Normally, the falling edge of A GATE will cause an externally generated pulse to be presented on the THO input, thus completing the loop and allowing the A Sweep to free-run (auto-level and auto triggered mode when the sweep is not triggered).

When ARUN is low, the operation is similar except that after a pulse on the THO input, A GATE won't go high until a low-to-high transition is presented on the A TRIG input (triggered sweep mode).

For either free-run or triggered modes, THO going high will cause the A GATE output to immediately go low, if the end-of-A-Sweep latch is set or not. Once the end-of-A-Sweep latch has been set, no more A Sweeps can happen until the THO input is pulsed (at the end of the holdoff). The end-of-A-Sweep latch can only be set with the EOAS input when A GATE is high.

The A Sweep logic of U602 also monitors the A TRIG input to latch certain A Trigger events. One latch (the auto-baseline latch) will set on any low-to-high transition on the A TRIG input. Another latch (the A Trigger latch) is level sensitive and will set when the A TRIG input is high. Both latches may be read out through the TDO (trigger-data out) pin, selected by the A1 and A0 address input pins. That data is applied to the TDI (trigger data in) pin of U600 and placed in the Display Logic IC's internal register to be read by the Measurement Processor. Both latches may also be reset via the $\overline{\text{SIN}}$ pin (see description of A1, A0, and $\overline{\text{SIN}}$ input pins).

B Sweep Logic

The B Sweep logic functions about the same as the A Sweep logic, except that more signals must be monitored to determine when the B Sweep can run. When DM1 and DM0 = 11, the B Sweep can't run at

all. When DM1 and DM0 = 10, the B Sweep won't be allowed to run or trigger until the DLY12 input goes high while the A GATE signal is also high (the normal delayed sweep mode). When DM1 and DM0 = 01, the B Sweep will be allowed to run or trigger immediately after the A GATE signal goes high (no B Sweep delay). When DM1 and DM0 = 00, then the B Sweep will be allowed to run or trigger immediately after the A GATE signal goes high, if the DS (delay select) input is high. If DS is low, the B Sweep is allowed to run or trigger as soon as the DLY12 input goes high while the A GATE signal is also high.

The B Sweep logic behaves as follows. The B GATE signal goes high and $\overline{\text{BUB}}$ (B Sweep unblanking) goes low together when the appropriate conditions (described in the preceding paragraph) are met. A low-to-high transition on the EOBS input will then set the end-of-B-sweep latch, causing $\overline{\text{BUB}}$ to go high. B GATE doesn't go low until the A GATE signal goes low. This is used internally to generate the $\overline{\text{S2}}$ and $\overline{\text{S3}}$ outputs in some modes, and is used externally to carry out the B ends A mode.

The DLY12 input goes to a level-sensitive latch; if A GATE is high and DLY12 momentarily goes high, the latch will be set, so that the DLY12 input does not need to be held high throughout the sweep cycle. A high level on the THO input will cause the A GATE signal to go low. That resets this latch and causes the reset of the rest of the sweep logic, forcing B GATE low and $\overline{\text{BUB}}$ high.

The DLY2 input also goes to a level sensitive latch. This second latch also gets reset when A GATE goes low. Together with the DLY1 latch output, A GATE, and the $\overline{\text{MGE}}$ input, the $\overline{\text{C GATE}}$ output signal gets generated (not used externally in the 2246 1Y and 2246 Mod A). $\overline{\text{C GATE}}$ goes low if A GATE is high, the DLY1 latch has been set, the DLY2 latch is still reset, and the $\overline{\text{MGE}}$ input is low.

Peak Volts Logic

The peak volts logic detects the positive and negative peaks of the B TRIG signal. It consists of a level-sensitive latch that can be gated by the $\overline{\text{C GATE}}$ signal, the A GATE signal, the DLY12 latch output, or continuously. The latch may be reset by strobing the $\overline{\text{SIN}}$ input with A1 and A0 set to 11. The latch output can be read at the TDO pin with A1 and A0 set this way. The Measurement Processor reads the state of the peak volts latch to determine when it has found the correct digital value of the signal peak being measured by the B Trigger Level Comparator.

The peak-detect latch output will go high when the B TRIG input goes high (if the gating condition selected by PM1 and PM0 is satisfied). The latch output goes low when reset.

Strobed Volts Logic

This logic samples the state of the B TRIG signal with the delay comparator outputs when making gated voltage measurements. The strobed volts latch consists of an edge-triggered flip-flop with a multiplexer driving the clock input, and the B TRIG signal driving the D input. When MSEL=1, the DLY12 latch output clocks the flip-flop. When MSEL=0, the DLY2 latch output clocks the flip-flop. The state of the flip-flop is read out at the TDO pin by the Measurement Processor when A1, A0 = 00. The flip-flop is reset by strobing the $\overline{\text{SIN}}$ input with A1, A0 = 11.

Z-Axis Logic

This logic drives the Z-Axis control outputs ($\overline{\text{S1}}$ - $\overline{\text{S4}}$). These outputs have the following control action:

- $\overline{\text{S1}}$ Turns on the A intensity current switch (active low).
- $\overline{\text{S2}}$ Turns on the B intensity current switch (active low).
- $\overline{\text{S3}}$ Turns on the A intensified current switch (active low).
- $\overline{\text{S4}}$ Turns on the Readout intensity current switch (active low).

Table 3-21 describes what the $\overline{\text{S1}}$ - $\overline{\text{S4}}$ outputs do as a function of ZM1, ZM0, HD1, HD0, $\overline{\text{A GATE}}$, $\overline{\text{BUB}}$, $\overline{\text{C GATE}}$, $\overline{\text{BUSY}}$, BLANK, and $\overline{\text{ZEN}}$.

Table 3-21
Z-Axis Switching Logic

ZM1	ZM0	HD1	HD0	$\overline{S1}$	$\overline{S2}$	$\overline{S3}$	$\overline{S4}$	Display Mode
0	0	0	0	1	1	1	(c)	Readout
0	0	0	1	(a)	1	(e)	1	A Sweep intensified by BUSY
0	0	1	0	1	(b)	1	1	B Sweep
0	0	1	1	(c)	1	1	1	X/Y
0	1	0	0	1	1	1	(c)	Readout
0	1	0	1	(a)	1	(d)	1	A Sweep intensified by C GATE
0	1	1	0	1	1	1	1	Blank
0	1	1	1	(c)	1	1	1	X/Y
1	0	0	0	1	1	1	(b)	Readout
1	0	0	1	(a)	1	(b)	1	A Sweep intensified by BUB
1	0	1	0	1	(b)	1	1	B Sweep
1	0	1	1	(c)	1	1	1	X/Y
1	1	0	0	1	1	1	(c)	Readout
1	1	0	1	(a)	1	1	1	A Sweep no intensified zone
1	1	1	0	1	1	1	1	Blank
1	1	1	1	(c)	1	1	1	X/Y

Notes:

(a) = BLANK or $\overline{\text{A GATE}}$
(b) = BLANK or $\overline{\text{A GATE}}$ or $\overline{\text{BUB}}$ or $\overline{\text{ZEN}}$
(c) = BLANK
(d) = BLANK or $\overline{\text{A GATE}}$ or $\overline{\text{C GATE}}$ or $\overline{\text{ZEN}}$
(e) = BLANK or $\overline{\text{A GATE}}$ or $\overline{\text{BUSY}}$ or $\overline{\text{ZEN}}$
or is a logical-or function.

ECL-to-CMOS Level Shifters

The Trigger Logic IC, U602, is an ECL device. Its output signal swing is the standard ECL range of about 0.6 V. All the ECL logic devices in the 2246 1Y and 2246 Mod A are powered from the +5 V supply rather than a -5 V supply. The resulting output voltage swing is from about 4.5 V to about 3.9 V between the high and low ECL logic levels. As U602 must pass signals to the Display Sequencer IC (U600) at CMOS highs and lows (about 3.9 V and 0 V respectively in this application), logic level translators are required. That job is done by an identical translator circuit for each of the three signals that must be sent. The circuit action of U603C, Q604, and Q605 (the $\overline{\text{A GATE}}$ translator) is described.

The single-ended A GATE output signal of U602 at pin 14 is applied to pin 4 of U603B. With its other input pin left open, U603B is used as a line driver only to produce a differential output signal. That differential signal is applied to the bases of a differential amplifier pair of pnp transistors (Q604 and Q605). The output signal is taken across R612 in the emitter of Q604. The emitter of Q605 is connected directly to ground. When the A GATE output of U602 is high (at 4.5 V), the voltage applied to the base of Q604 is 4.5 V, and the voltage on the base of Q605 is 3.9 V. These voltage levels bias Q605 on and Q604 off, with a resulting output level across emitter resistor R612 of 0 V to the $\overline{\text{A GATE}}$ (active low) input of U600. When the A GATE output of U602 goes low at the end of the sweep, the bias voltage levels on Q604 and Q605 reverse, and Q604 is biased on (and Q605 off). Signal current through emitter resistor R612 develops a voltage of about 3.9 V (the unasserted level) to the $\overline{\text{A GATE}}$ input of U600.

Display Logic Clock

The Display Logic clock signal at 10 MHz is generated by a transistor oscillator circuit composed of Q608, Y600, and associated components. The frequency of oscillation is controlled by a ceramic resonator, Y600, in the feedback path from the collector to the base of Q608.

A AND B SWEEPS AND DELAY COMPARATORS (Diagram 5)

Sweep Control Shift Registers

Two serial shift registers provide the control interface between the Measurement Processor and the A and B Sweep circuitry. Control bits loaded into registers U302 for A Sweep and U303 for B Sweep are serially clocked from the SR DATA line by the SR1 CLK pulse. The states of the loaded bits select the A and B Sweep timing by choosing the correct charging current and timing capacitor to provide the full range of sweep speeds. Other control bits loaded into the two registers select the delay voltage applied to the Delay Comparators and the output voltage from the VOLTS CAL circuit (used for measurement SELF CAL). Extra bits are shifted through the two shift registers into the Auxiliary Data Register (U1103, Diagram 3) via the AUX DATA signal line to control the trigger bandwidth, the TV Sync Detector switching, and the functions of 10X MAG, X-Y display, and Vertical Comparator enabling.

A and B Sweep Timing

Refer to Figure 3-4 for a simplified schematic of the A Sweep circuitry.

TIMING RESISTORS. The Sweep Timing resistors in resistor pack R313 are shared between the A Sweep and the B Sweep circuitry; those in resistor pack R321 are divided between the two sweep circuits. Timing Resistor selection is done by multiplexers U308 and U307 for the A Sweep and by U310 and U311 for the B Sweep. The multiplexers are driven by the Measurement Processor via control bits loaded into Shift Register 1 (U302 and U303). (See Table 3-22 for the control bit coding.)

SEC/DIV VAR CIRCUIT. Variable sweep speed is controlled by the TIME VAR voltage applied to operational amplifier U309B. The amplifier controls the current passing through Darlington transistor Q301 to the voltage divider formed by resistor pack R313. The voltages at the taps of the voltage divider set the forward bias on the charging-current pass transistor, Q307, via operational amplifier U304. When the SEC/DIV VAR control is in its detent (calibrated) position, diode CR301 is reverse biased, and the divider formed by R311 and R314 between the +2.5 V reference and ground precisely sets the input voltage to the noninverting input of U309B. With a fixed voltage output from U309B, the current through Q301 and R313 is also a fixed value. When the SEC/DIV VAR control is rotated out of its detent position, the voltage at the junction of R309 and R310 decreases to forward bias CR301. The input voltage to U309B and, therefore, the current to R313 decreases in proportion to the amount of rotation of the SEC/DIV VAR control. A decreasing voltage at the output taps of R313 decreases the charging current through Q307 to increase the sweep ramp time.

A AND B SWEEP TIMING CAPACITORS. The timing capacitor selection circuitry is similar for the A and the B Sweep, but the B Sweep has fewer range steps and doesn't require two selectable capacitors. Only the A Sweep timing capacitor selection is described; like components in the B Sweep circuit do the same job.

Timing capacitance for the A Sweep is made up of a combination of fixed, variable, stray, and selectable components. Sweep timing for the fastest A Sweep speeds is done with a combination of the fixed, variable, and stray capacitance and the selectable charging current supplied through R321, U308, Q307 and Q330. When the slower sweep speeds are selected, additional capacitors must be switched into the circuit to produce a longer charging time. The capacitors that are always in the A Sweep charging path are C315 (a fixed capacitor), C314 (a variable capacitor used to adjust the A Sweep timing at the fastest sweep speeds), and the stray circuit capacitance.

The base-to-collector junction capacitance Q330 changes as the voltage between the base and collector of Q330 increases during ramp up. At the fastest A Sweep speeds, that change would affect the timing at the start of the charging ramp. To compensate for the junction-capacity effect of Q330, transistor Q328 (connected as a diode) is added between the charging current path and the A Sweep Buffer output. The capacitive current through the reverse-biased junction of Q328 adds current to the output to make up for the current required to charge the base-to-collector capacity of Q330 in the input of the Sweep Buffer.

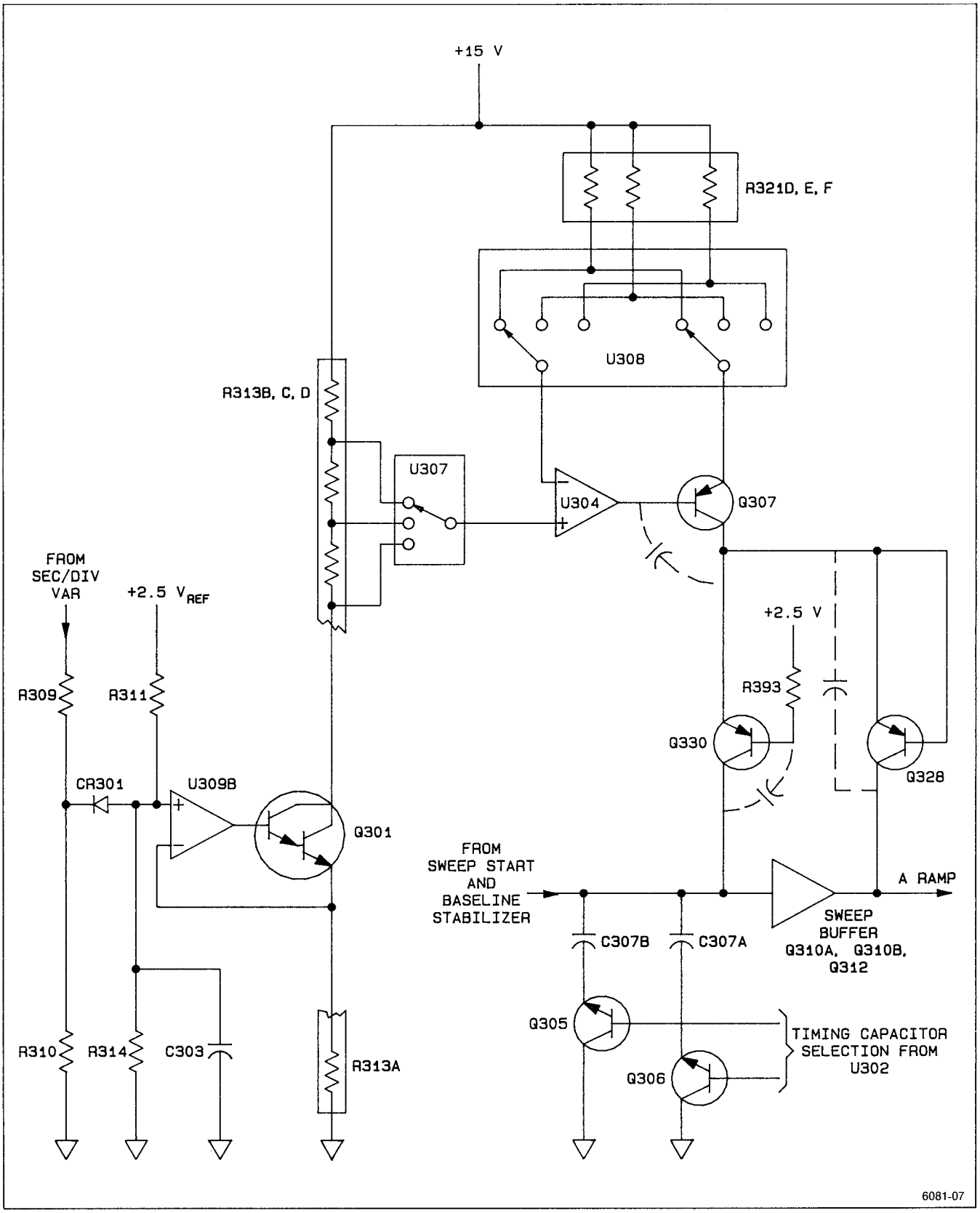

Figure 3–4. Simplified Sweep Circuit.

The selectable sweep timing capacitors come in a matched set of three capacitors, two for the A Sweep timing (C307A and C307B) and one for the B Sweep timing (C307C). When added capacitance is needed for a sweep speed setting, the Measurement Processor loads selection control bits into Shift Register 1 (U302 for the A Sweep) that turn on either Q305 or Q306 or both. Assume that Q305 is biased on by a high control bit from pin 5 of U302. Capacitor C307B is then added in parallel to the capacitors in the charging path, and a longer ramp time is needed to reach the end-of-sweep voltage level. Control bits selecting the charging current are also loaded at the same time. See Table 3-22 for the A Sweep timing and control bit selections (as0-as5) and Table 3-23 for the B Sweep bit selections (bs0-bs4).

Baseline Stabilizer

The job of the Baseline Stabilizer circuit (Q302, Q303, and Q304 for the A Sweep and Q315, Q316, and Q317 for the B Sweep) is to tie the start of the sweep ramps to the same fixed level for each sweep. Operation of the A Sweep stabilizer is described.

A differential circuit formed by Q302 and Q303 compares the A Sweep feedback signal on the base of Q303 against the reference voltage on the base of Q302, to control the base bias current to Q304 and thereby the sweep baseline level. Operational amplifier U309A generates the fixed reference that the baseline voltage level is compared against. The reference voltage amplifier has a gain of -0.8 (less than one and inverted); and, with +2.5 V applied to the inverting input and the noninverting input grounded, the output level is -2 V. Capacitor C305 filters the output to eliminate noise that could cause sweep start jitter. The filtered voltage is applied to the junction of R317, R354, and C305 and references both Baseline Stabilizer circuits.

A and B Sweep Start

The A and B Sweep Start circuits operate the same way with like components in each doing the same job; only the A Sweep Start circuit is described. Sweep time may be divided into three periods: baseline, run-up, and retrace (see Figure 3-5). Sweep start and length of sweep run-up is controlled by the A GATE and $\overline{\text{A GATE}}$ signals from the Trigger Logic IC (U602, Diagram 4).

A GATE SIGNALS. The A GATE and $\overline{\text{A GATE}}$ signals are applied via 8.2 V zener diodes (VR301 and VR302) to the bases of Q308 and Q309 in a differential amplifier configuration. The input circuit to the differential pair level shifts the ECL signals (4.3 V to 3.4 V) to the proper biasing levels (-3.9 V to -4.8 V) for the bases of the differential amplifier transistors. Transistor Q326 in the emitter circuit of Q308 and Q309 is the current source for the differential pair. Transistor Q311 is part of the bias circuit for Q326 and provides feedback to the base of Q326 that controls the current provided to Q308 while the sweep is being held at the baseline level.

BASELINE STATE. In the baseline state (during sweep holdoff), Q308 and Q304 are on and Q309 is off, and the level at the collector of Q308 is held at -2.8 V. That voltage is buffered by the A Sweep Buffer (with about a 0.7 V rise across the base-to-emitter junction of Q312) and fed back to the base of Q303 where it is compared with the -2 V reference produced by operational amplifier U309A. If the baseline voltage is too low compared to the output of U309A, Q303 (the retrace current regulator) is biased on a little harder. Additional base current is available to Q304, and it conducts harder to raise the output baseline voltage to the reference voltage level. The opposite action occurs if the baseline voltage is too high.

A smaller feedback loop formed by Q311 and R305 controls the gain of Q326 so that the standing current available (about 3 mA) is just enough to keep Q304 biased on during the baseline state. When the states of the gate signals reverse, Q309 is turned on and Q308 turns off. The standing current then conducts through Q309 to rapidly pull the base of Q304 down to shut it off. When the base voltage reaches about -2.7 V, Q333 conducts. That action clamps the base voltage of Q304 (and the collector voltage of Q309) at that level and prevents Q309 from saturating so that it will have a short turn-off time when the sweep ends.

Table 3-22

A Sweep Timing Selections

SPEED	I_{timing}	C_{timing}	as0	as1	as2	as3	as4	as5	Min H.O.
20 ns	2 mA	C314/C315	0	0	1	1	1	0	2.0 µs
50 ns	800 µA	"	0	0	0	0	1	0	2.0 µs
100 ns	400 µA	"	0	0	1	0	0	1	2.0 µs
200 ns	200 µA	"	0	0	0	1	0	1	2.0 µs
500 ns	80 µA	"	0	0	0	0	0	1	2.0 µs
1 µs[a]	40 µA	"	0	0	1	0	0	0	2.0 µs
2 µs[a]	20 µA	"	0	0	0	1	0	0	4.0 µs
5 µs[a]	8 µA	"	0	0	0	0	0	0	10 µs
1 µs	4 mA	C307B	0	1	1	0	1	0	2.0 µs
2 µs	2 mA	"	0	1	0	1	1	0	4.0 µs
5 µs	800 µA	"	0	1	0	0	1	0	10 µs
10 µs	400 µA	"	0	1	1	0	0	1	20 µs
20 µs	200 µA	"	0	1	0	1	0	1	40 µs
50 µs	80 µA	"	0	1	0	0	0	1	100 µs
100 µs	40 µA	"	0	1	1	0	0	0	200 µs
200 µs	20 µA	"	0	1	0	1	0	0	400 µs
500 µs	8 µA	"	0	1	0	0	0	0	1.0 ms
1 ms	4 mA	C307A	1	0	1	0	1	0	2.0 ms
2 ms	2 mA	"	1	0	0	1	1	0	4.0 ms
5 ms	800 µA	"	1	0	0	0	1	0	10 ms
10 ms	400 µA	"	1	0	1	0	0	1	20 ms
20 ms	200 µA	"	1	0	0	1	0	1	40 ms
50 ms	80 µA	"	1	0	0	0	0	1	100 ms
100 ms	40 µA	"	1	0	1	0	0	0	200 ms
200 ms	20 µA	"	1	0	0	1	0	0	400 ms
500 ms	8 µA	"	1	0	0	0	0	0	1 s

[a]Used only during horizontal characterization.

Table 3-23

B Sweep Timing Selections

SPEED	I_{timing}	C_{timing}	bs0	bs1	bs2	bs3	bs4
20 ns	2 mA	C329/C330	0	1	1	1	0
50 ns	800 μA	"	0	0	0	1	0
100 ns	400 μA	"	0	1	0	0	1
100 ms	200 μA	"	0	0	1	0	1
100 ms	80 μA	"	0	0	0	0	1
1 μs	40 μA	"	0	1	0	0	0
2 μs	20 μA	"	0	0	1	0	0
5 μs	8 μA	"	0	0	0	0	0
10 μs	4 mA	C307C	1	1	0	1	0
20 μs	2 mA	"	1	0	1	1	0
50 μs	800 μA	"	1	0	0	1	0
100 μs	400 μA	"	1	1	0	0	1
100 μs	200 μA	"	1	0	1	0	1
100 μs	80 μA	"	1	0	0	0	1
1 ms	40 μA	"	1	1	0	0	0
2 ms	20 μA	"	1	0	1	0	0
5 ms	8 μA	"	1	0	0	0	0

RUNUP STATE. With Q304 and Q308 off, the charging current from the timing circuit can begin charging the timing capacitors, and the voltage at the emitter of Q304 ramps up linearly. That ramp is buffered by the A Sweep Buffer (U310A and B and Q312) to drive the Horizontal Output Amplifier. As the ramp is running up, it is being compared with a fixed reference level by the Sweep End Comparators. When the ramp level reaches the comparison level, the A SWP END signal goes high. That signals the Trigger Logic IC, U602, to end the A GATE signal, and the sweep is switched to the retrace state. The sweep ramp is also being fed back to the base of Q303. At the point in the ramp that the base voltage of Q303 exceeds that on the base of Q302 (the −2 V baseline reference), Q303 is biased off and Q302 conducts. This biasing conditions disables the feedback loop that stabilizes the baseline voltage level, and it remains off until the feedback voltage during the retrace period falls back to near the −2 V baseline reference voltage on the base of Q302.

RETRACE STATE. At the end of the sweep, the gate signals reverse state. Transistor Q309 is biased off, and Q308 is biased on. Retrace current supplied by Q308 quickly returns the voltage across the timing capacitor to a little below the baseline voltage level. That retrace current is regulated by Q311 and Q326 to produce a rapid, yet rate-controlled retrace. At the point of the fall in feedback voltage where Q303 starts to turn on, base current becomes available to Q304 to turn it on, and the feedback loop that stabilizes the voltage at the baseline level again becomes active.

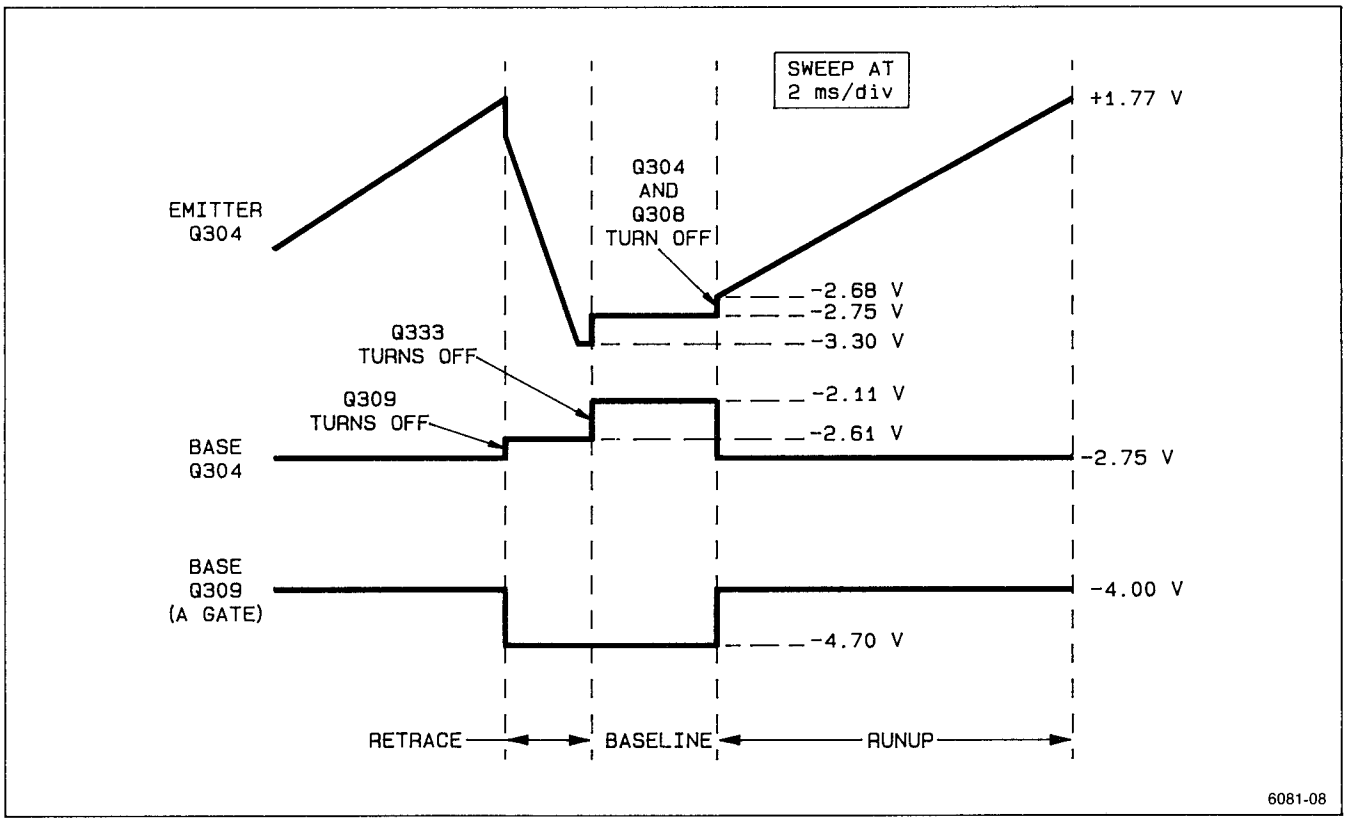

Figure 3-5. A Sweep Start circuit waveforms.

A and B Sweep Buffers

The A Sweep Buffer (Q310A and B, and Q312) and B Sweep Buffer (Q323A and B, and Q325) buffer the voltage ramp as the timing capacitors charge. In the A Sweep circuit, Q310A and Q310B are high-impedance FET amplifiers driving emitter follower Q312. The output signal from the emitter of Q312 is applied to the Delay Time Comparators, the End-of-Sweep Comparators, fed back to the Baseline Stabilizer circuit, and sent to the Horizontal Output Amplifier (Diagram 6) as the A RAMP horizontal deflection signal.

Sweep End Comparators

The sweep ramp signals must horizontally deflect the electron beam across the entire face of the crt. Comparators U316A, B, C, and D determine when the A and B Sweeps have reached the required amplitude. These comparators check the sweep voltage against the reference level that defines the end of the sweep and generate the A SWP END and B SWP END signals when that level is reached. The sweep-end signals are applied to the Trigger Logic IC (U602) so that device knows when the sweeps are done. The Trigger Logic IC then switches the states of the A GATE or the B GATE signal (as appropriate) to reset the sweep circuitry to its baseline level.

Delay Time Comparators

When the A Sweep ramp runs, its amplitude is compared against two delay levels by the comparators of U313. The differential outputs of the REF delay comparator change states when the A Sweep crosses the first delay level. The differential output signal from the delay comparator is applied to ECL line receiver U315C. That device has a high gain and produces a fast-rise signal at an ECL level. When the DLY END 0 (reference delay completed) is received by the Trigger Logic IC (U602, Diagram 4), a B GATE is produced to start the B Sweep in RUNS AFTER B Trigger mode. That B Sweep displays the applied waveform at the first (reference) delay setting. At the end of the delay in RUNS AFTER mode, the Trigger Logic IC begins watching for a B Trigger signal that must occur before a B GATE is produced.

The differential output of the second delay comparator in U313 changes states when the A Sweep

ramp at pin 9 crosses the second (delta) delay level applied to pin 6. At that point, the DLY END 1 signal is produced at the output of U315A (pin 2) and applied to U602. A second B GATE signal is then produced to start another B Sweep ramp to display the signal at the delta delay setting.

Delay Time Switching

The DELTA DELAY and REF DELAY voltage level are applied to multiplexer U301 from the DAC circuit. The Measurement Processor established those voltages based on the settings of the CURSOR/TIME POSITION controls made by the user from the front panel. Switch section U301A is held permanently switched to direct the DELTA DELAY signal to its output pin.

HORIZONTAL OUTPUT AMPLIFIER (Diagram 6)

Horizontal Preamplifier

Horizontal Preamplifier IC U802 converts single-ended horizontal signals (A sweep, B sweep, horizontal readout, and X-Axis) into differential outputs to drive the crt horizontal deflection plates. The horizontal preamplifier signals are selected by the HD0 and HD1 logic signals from Display Sequencer U600 on Diagram 4. Magnified sweep, beam find, horizontal positioning, and horizontal gain adjustments (X1 and X10) are provided in U802 and associated components.

The function of each pin of U802 is as follows:

RO (Pin 1): RO HORIZ. Input for horizontal component of the readout display.

GA1 (Pin 2): Adjustment of R825 sets the horizontal X1 gain.

A RAMP (Pin 3): Input for the A Sweep signal.

GND (Pin 4): Ground connection for U802.

B RAMP (Pin 5): Input for the B Sweep signal.

MAG (Pin 6): Selects X10 magnified sweep when high or normal sweep when low. Magnified mode is selected when in X-Y horizontal mode.

X (Pin 7): X-AXIS. This is the X-Axis signal input when in X-Y horizontal mode. The signal source is the CH 1 trigger signal from U421A (Diagram 3). Adjustment of R827 sets the gain of the X-Axis signal.

HD0 (Pin 8): Pin 8 (HD0) and pin 11 (HD1) are logic lines that select the horizontal input signal to output differentially at pins 18 and 19. Table 3-24 gives the selection logic.

Table 3-24
HD0 and HD1 Logic

HD1	HD0	Horiz Signal Selected
0	0	RO HORIZ
0	1	A SWEEP
1	0	B SWEEP
1	1	X-AXIS

V_{EE} (Pin 9): −5 V supply to U802.

GA10 (Pin 10): Adjustment of R826 sets the horizontal X10 gain.

HD1 (Pin 11): See the description for HD0 above.

ROUT (Pin 12): Horizontal Preamplifier differential output signal for the right deflection plate.

LOUT (Pin 13): Horizontal Preamplifier differential output signal for the left deflection plate.

BF (Pin 14): The BEAM FIND signal from U503 (Diagram 4) switch the Beam Find feature on or off. BEAM FIND on reduces the horizontal deflection to within the graticule area. Vertical deflection is also reduced and the intensity is set to a fixed viewing level to aid in locating off-screen, over-deflected, or under-intensified displays.

POSITION (Pin 15): Input for the horizontal position control signal. Multiplexer section U301B switches to reduce the range of the Horizontal POSITION control to match that of the Vertical POSITION controls when in X-Y horizontal mode. When X-Y display mode is selected, a low $\overline{XY}$ signal on Pin 9 of U301B connects the pin 5 input to the horizontal position input of U802. The signal at pin 5 is a reduced horizontal positioning signal produced by the R353/R358 voltage divider.

V_{CC} (Pin 16): +7 V supply to U802.

Driver Amplifiers

The differential output current signal from U802 passes through common-base current amplifiers Q809 and Q810. These transistors drive current-to-voltage converters Q803-Q804 and Q807-Q808. Emitter followers Q804 and Q803 convert the current signal to a voltage signal to drive the complementary-FET output amplifiers, Q801 and Q802, to produce the negative-going deflection voltage. Emitter followers Q808 and Q807 convert the other side of the differential current to drive Q805 and Q806 to produce the positive-going horizontal deflection voltage.

The circuit of Q804 and Q803 is configured to respond rapidly to a negative-going feedback signal; the circuit of Q807 and Q808 is configured to respond quickly to the positive-going feedback signal. Zener diode VR802 and associated resistors R843 and R844 maintain the collector bias of Q803 and Q808 at 24 V.

Magnifier registration and horizontal readout centering is set by MAG REG potentiometer R809. Adjustment of R809 is done to balance the currents into the emitters of Q809 and Q810 to obtain the correct horizontal position of the readout within the graticule display area.

Output Amplifier

The differential circuitry of both sides of the Horizontal Output Amplifier is similar; operation of only one side of the amplifier is described. Complementary-FET amplifiers Q801 and Q802 produce the negative-going horizontal signal to drive the left deflection plate. Two transistors are used to provide adequate power handling. Since the two gates are at different bias levels, signal voltage is applied to the gate of transistor Q801 via C803. Resistor R828, connected between the source and drain of Q801, is a parallel current path around Q801 that balances the power handling requirements of the two FETs. The amplifier FETs are high gain devices, and the overall gain must be reduced to maintain circuit stability at the faster sweep rates. To provide the high-frequency gain reduction, resistor R850 is in series with C802, from the source of Q802 to the drain of Q801, to damp the driving-energy to Q801 supplied by C802 during the sweep retrace transitions. Feedback resistor R806 provides positive feedback and sets the overall gain of the output amplifier stage. A parallel trimmer capacitor across the feedback resistor, C807, adjusts the 2 ns sweep timing for its best linearity. Impedance matching to the deflection plate and additional signal damping is provided by R802.

As the gate voltage of Q802 increases to follow the input ramp signal, the drain voltage goes negative from about 87 V toward the 15 V source voltage. At the same time, the signal on the gate of complementary-FET Q801 is reducing the current through Q801, thereby allowing its source voltage to fall. At the end of the ramp signal, the input voltage falls, and through the positive feedback, Q802 is rapidly biased off. That also biases Q801 on, and the energy stored in C802 quickly returns the deflection plate voltage back to its starting point.

Common-Mode Stabilizer

Operation amplifier U801A compares the node voltage at the junction of R820, R821, and R822 to ground. Its output drives the amplifier input common-mode point (at the junction of R811 and R812). The purpose of this dc feedback circuit is to keep the average voltage level on the right and left horizontal deflection plates set to the center of the amplifier's dynamic operating range (about 70 V).

Z-AXIS, CRT, PROBE ADJUST, AND CONTROL MUX (Diagram 7)

Z-Axis and Auto Focus Amplifiers

The Z-Axis and Auto Focus Amplifiers circuit operate on the same principle and both get their drive signal from the Z-Axis Focus Driver. However, the differences are enough that both circuits are described.

Z-AXIS AMPLIFIER. Intensity control signal current from the Z-Axis/Focus driver is applied to the Z-Axis amplifier via Q2707. That transistor acts as a current buffer amplifier. The input signal line is clamped at 5.4 V by Q2715 to prevent an overdrive of the Z-Axis circuit. The Z-Axis Amplifier output transistors consist of Q2701 and Q2702 on one side of the complementary-symmetry totem-pole output amplifier and Q2703 and Q2704 on the other side. Two transistors are used on each side to divide the power handling requirements needed to drive the crt control grid. The crt grid capacity is large, and requires a relatively large amount of power to change the intensity level quickly.

In the base circuit of Q2704, CR2705 prevents the base-to-emitter voltage from exceeding 0.6 V. Zener diode VR2701 dc level-shifts the signal voltage level at the emitter of Q2705 for proper biasing of Q2704. The ac signal components are bypassed around VR2701 by C2703. Base biasing for Q2702 and Q2703 is taken from a series-resistance divider formed by R2711, R2712, R2713, and R2714 between ground and the +130 V supply.

Base biasing for Q2701 is provided by R2715 and R2716 in series between ground and the +130 V supply.

A negative-going input signal to the base of Q2705 causes that transistor to decrease conduction, and the voltage at the top of C2705 goes negative following the input signal. Transistor Q2701 is biased on harder by the negative transition, and Q2704 decreases in conduction. At the Z-Axis output signal line (collector of Q2702), the increasing conduction causes the voltage to rise towards the +130 V supply level. A positive-going input signal has the reverse effect on the output signal. The full output-voltage swing of about 60 V is produced by a 3 mA current change of the Z-Axis Focus/Driver signal current.

Gain of the Z-Axis Amplifier stage is set by the feedback through R2708 and R2709 from the collector of Q2702 to the base of Q2705. The amplifier is compensated by the variable capacitor (C2704, Z-Axis Response) in parallel with the feedback resistors.

BEAM FIND. The Z-Axis portion of the BEAM FIND circuit consists of R2705 and Q2706. When BEAM FIND is active, Q2706 is biased on. This clamps the Z-Axis signal line via R2706 and raises the voltage at the base of Q2705 to a level that produces a bright trace.

Auto Focus Amplifier

The Auto Focus Amplifier (Q2708, Q2709, Q2711, Q2712, and Q2713) uses a sample of the Z-Axis/Focus Driver signal current from W2701 to drive the auto-focus circuit. The input signal is inverted by Q2708 to drive Q2711 in a complementary fashion to Q2705 in the Z-Axis Amplifier circuit (as the opposite circuit action must happen to produce the correct auto-focus response). The auto-focus output amplifier is similar to the Z-Axis amplifier, but it uses only one complementary transistor on each side (not as much power is needed to drive the focus grid as needed to drive the intensity grid).

Dc Restorers

The Z-Axis and the Auto Focus DC Restorers are similar in operation. Both circuits are described, but only the added portions of Auto Focus circuitry are included in the discussion of the Auto Focus circuit.

The Dc Restorers set the crt control-grid and focus-grid biases and couple the ac and dc components of the Z-Axis and the Auto Focus Amplifier outputs to the crt grids. Direct coupling of the Z-Axis and Auto Focus signals to the crt control grid is not employed because of the high potential differences involved. Refer to Figure 3-6 during the following discussion.

Z-AXIS DC RESTORER. Ac drive to the Z-Axis Dc Restorer circuit is obtained from pin 12 of T2204. The drive voltage has a peak amplitude of about ±130 V at a frequency of about 18 kHz and is coupled into the Z-Axis Dc Restorer circuit through R2722 and C2713. The cathode of diode CR2704 is biased by Grid Bias potentiometer R2719 and referenced to ground via R2720. The ac-drive voltage is clamped to the voltage set by the Grid Bias potentiometer wiper whenever the positive peaks forward bias diode CR2704. Capacitor C2710 prevents significant loading of the potentiometer wiper voltage when CR2704 conducts.

The Z-Axis Amplifier output voltage, which varies between +16 V and +66 V, is applied to the Dc Restorer at the anode of CR2703. The ac-drive voltage holds CR2703 reverse biased until the voltage falls below the Z-Axis Amplifier output voltage level. At that point, CR2703 becomes forward biased and clamps the junction of CR2703, CR2704, and C2713 to the Z-Axis output level. Thus, the 18 kHz ac-drive voltage is clamped at two levels to produce a roughly square-wave 18 kHz signal with a positive dc-offset level.

The Dc Restorer is referenced to the -2750 V crt cathode voltage through CR2702 and R2723. Initially, both C2712 and C2711 charge up to a level determined by the difference between the Z-Axis output voltage and the crt cathode voltage. Capacitor C2712 charges from the Z-Axis output through R2721, R2723, CR2702, and CR2703, to the crt cathode. Capacitor C2711 charges through R2723 (a series damping resistor), CR2702, and CR2701 to the crt cathode.

During the positive transitions of the ac drive (from the lower clamped level toward the higher clamped level) the charge on C2712 increases due to the rising voltage. The voltage increase across C2712 is equal to the amplitude of the positive transition. The negative transition is coupled through C2712 to reverse bias CR2702 and forward bias CR2701. The increased charge of C2712 is then transferred to C2711 as C2712 discharges toward the Z-Axis output level. Successive cycles of the ac input to the Dc Restorer charge C2711 to a voltage equal to the initial level plus the amplitude of the clamped square-wave input.

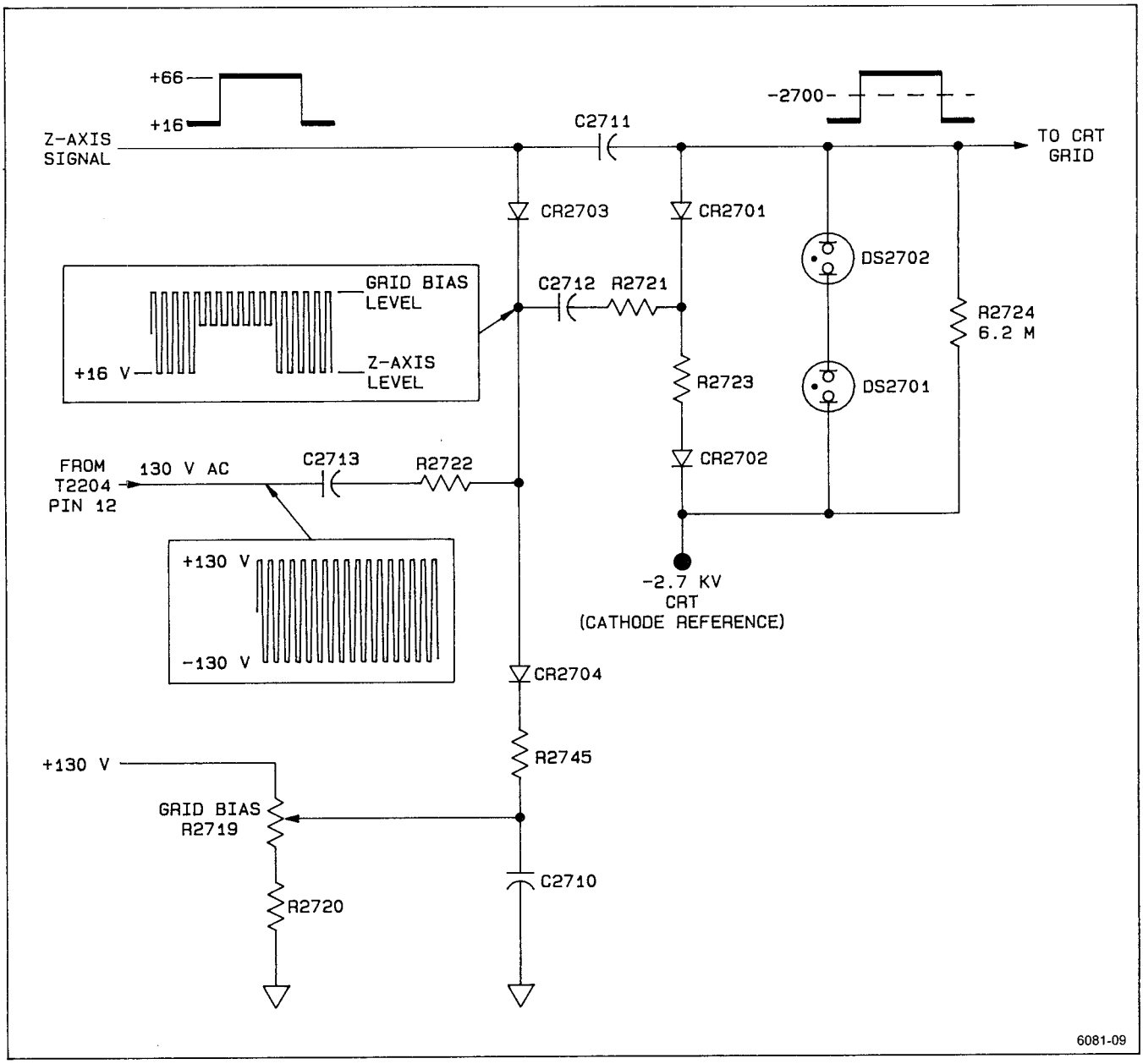

Figure 3-6. Simplified diagram of the DC Restorer circuitry.

The charge held by C2711 sets the control-grid bias voltage. If more charge is added to that already present on C2711, the control grid becomes more negative (display dimmer). Conversely, if less charge is added, the control-grid voltage level becomes closer to the cathode-voltage level, and the display becomes brighter. During periods that C2712 is charging, the crt control-grid voltage is held constant by the long time-constant discharge path of C2711 through R2724.

Fast-rise and fast-fall transitions of the Z-Axis output signal are coupled to the crt control grid through C2711 to start the crt writing-beam current toward the new intensity level. The Dc Restorer output level

then follows the Z-Axis output-voltage level to set the new bias voltage for the crt control grid.

Neon lamps DS2702 and DS2701 protect the crt from excessive grid-to-cathode voltage if the potential on either the control grid or the cathode is lost for any reason.

AUTO FOCUS DC RESTORER. The action of the Auto Focus circuit has to be in reverse of the action of the Z-Axis circuit. The differential transistor pair of Q2708 and Q2709 provides drive to the Auto Focus Amplifier that is inverted in polarity to the Z-Axis signal. As the intensity increases (more beam current), the focus grid bias must become more positive to maintain the focus of the beam. Also, since the focus grid operates at a less negative level than the control grid, the Auto Focus DC Restorer is referenced to the -2750 V supply via a voltage divider chain.

The FOCUS potentiometer (R2758) voltage is taken across the middle resistor of the divider string to provide an adjustable focus voltage that sets the nominal focus level. Capacitor C2758 filters the reference supply voltage for the focus circuit.

Volts Cal Signal Source

This circuit provides the precision voltages required for setting the voltage measurement constants during the SELF CAL routine. Ground is connected to the vertical input when GND Input Coupling is selected.

Five voltages are selected from a precision voltage divider, R921, and multiplexed through U931 to the vertical inputs at the appropriate time during the SELF CAL routine. Selection is controlled by three binary coded lines (VOLT CAL 0, 1, 2) from U303. Those control bits and the selected output voltage may be checked one at a time by running the VOLT REF exerciser from the Service Menu.

Control Multiplexer

Multiplexer U506, controlled by Data Latch U2313 on Diagram 11, selects the A INTEN, B INTEN, and READOUT control levels and probe code voltages to be sent on the PROBE MUX signal line to multiplexer U2309 on Diagram 11. The bit coding is shown in Table 3-25. The selected output from U2309 is applied to the A-to-D Converter (U2306, Diagram 11) where it is digitized and sent to the Measurement Processor.

Table 3-25
Front-Panel Multiplexer Channel Select Bits

CONTROL LINE			Analog Signal Selected
POT7	POT6	POT5	
0	0	0	A INTEN
0	0	1	RO INTEN
0	1	0	CH 1 PROBE
0	1	1	CH 2 PROBE
1	0	0	CH 3 PROBE
1	0	1	CH 4 PROBE
1	1	0	B INTEN
1	1	1	ANALOG GND

Scale Illumination

Front-panel SCALE ILLUM control R905 varies the base current of Q905, Q907, and Q908 to set the intensity levels of the scale illumination bulbs (DS901, DS902, DS903).

NOTE

Bulb life is extended by keeping SCALE ILLUM control set low or off except when full intensity is required.

Probe Adjust Circuit

The Probe Adjust circuit generates a 0.5 V square wave signal at about 1 kHz. Operational amplifier U930A has a gain of about 4. The +2.5 V reference on its noninverting input produces a little over 10 V at the output pin. That voltage is divided by the voltage divider formed by R936, CR936, and R937 for a peak amplitude of the signal of 0.5 V during the time CR936 is forward biased. When CR936 is reverse biased by the output of U930B, the Probe Adjust output voltage is pulled down to 0 V through R937 to ground.

Operational amplifier U930B is a free-running oscillator circuit with a period of about 1 ms. The oscillator frequency is determined mainly by the charging time constant of C935 and R935. The voltage divider formed by R938, R934, and R939 divides the +15 V supply to provide a positive voltage on pin 5 of the oscillator to get the circuit into oscillation. (When the circuit is oscillating, the feedback signal switches the pin 5 voltage between about +8 V to 0 V.) The gain of the amplifier is high enough to drive pin 7 to the positive supply voltage level at about 14 V, and the signal voltage level on pin 5 rises to a little over 8 V from the feedback current supplied by R933. The CLK 1K signal taken from the junction of R934 and R939 is supplied to U600 and is used to skew the chop-clock frequency. The skew prevents the oscilloscope from triggering on the chop frequency when displaying multiple traces in CHOP Mode.

At that level CR935 is reverse biased, and CR936 is forward biased (by the output of U930A) to pass the Probe Adjust high level output signal current. Charging current through feedback resistor R934 charges C935 up from 0 V toward the output voltage level. As soon as the charge on C935 (and the voltage on pin 6 of U930B) reaches the voltage level on pin 5, the output level at pin 7 drops to about −5 V, and C935 must then begin discharging to the new voltage level. At that point CR935 is forward biased and that reverse biases CR936 so that the Probe Adjust output voltage drops to 0 V. Resistor R940, in series with CR935, limits current flow to protect U930 and CR935 in the event of a static discharge to the PROBE ADJUST output connector.

Crt

The Trace Rotation adjustment, R911, varies the current through the Trace Rotation coil. The Trace Rotation coil is located between the crt face and the vertical and horizontal deflection plates, and it affects both the vertical and horizontal alignment of the trace.

The Geometry adjustment, R2784, varies the voltage level on the horizontal deflection-plate shields to control the overall geometry of the display (minimizes bowing of the display).

The Astigmatism adjustment, R2788, varies the voltage level on the astigmatism grid to obtain the best-focused display over the whole face of the crt.

MEASUREMENT PROCESSOR (Diagram 8)

The Measurement Processor circuitry includes the Processor (U2501), the System RAM (U2521), the System ROM (U2519), communication bus latches and transceivers, the Address Decoding circuitry, and the Power-On Reset IC (U2502).

Power-On Reset

The +5 V supply is monitored by U2502 to generate the reset signals throughout the instrument. These reset signals initialize the states of the logic devices and ensure that memory writes to any of the RAM spaces cannot occur until the +5 V supply is up to its correct operating level. The RESET signal output at pin 6 is initially high during power up (as soon as the voltage has reached the operating level of the RESET IC, U2502). That high signal is inverted by U2506C to produce the $\overline{\text{SYS RESET}}$ signal. The $\overline{\text{SYS RESET}}$ signal holds Processor U2501 in its reset state.

The $\overline{\text{SYS RESET}}$ signal also resets and initializes the Readout Processor (U2400, Diagram 9). At pin 5 of U2502, a $\overline{\text{RESET}}$ signal is generated. That signal biases Q2507 off to prevent System RAM U2521 from being selected by any random states that might occur on the address lines during reset as the voltage is rising.

About 5 ms after the +5 V supply reaches the operating level required for the Processor, the RESET condition is removed, allowing the Processor to operate. At power off (and for a momentary drop in the +5 V supply), when the +5 V supply falls below the safe operating level of the logic devices, the RESET condition occurs to prevent random operation.

Measurement Processor

FUNCTION. Measurement Processor U2501 is a multitasking device. Its major functions are the following:

1. Continually refreshes the front panel indicator LEDs. One column of the six-column LED matrix is refreshed every 2.048 ms.

2. Continually scans the front panel switch settings, sensing rotation of rotary switches and closures or openings of momentary-contact switches. One column of the six-column switch matrix (the same column number of LEDs being refreshed) is read every 2.048 ms.

3. Communicates with the Readout Processor and Readout RAM to set attributes for each readout field, put text into each field, and turn the readout fields on or off.

4. Scans the front panel pots and sets control voltage levels. The Measurement Processor

selects a pot to be scanned by connecting it to Comparator U2306 in the d-to-a circuitry. The Measurement Processor does a successive-approximation a-to-d conversion on each pot, using the DAC (U2302) to output the search values to the Comparator. Pot values are scanned, processed, and converted to analog control values by the DAC. The analog levels from the DAC are output to the controlled devices via sample-and-hold circuits (U2304, U2305 on Diagram 11).

5. Sets up the hardware state of the instrument, including shift registers 0 and 1, BEAM FIND, and the operating states of U600 (SLIC) and U602 (FLIC). This setup takes place as needed for every change of a front panel momentary-contact or rotary-contact switch.

6. Keeps track of trigger status and controls the trigger levels when in AUTO LEVEL mode. It uses FLIC (U602) to find the A Trigger status (writing to FLIC to reset the A Trigger latch, and reading from it to get the status). It uses SLIC (U600) to find the B Trigger status (writing to SLIC to reset the B Gate latch, and reading from it to get the status). To reacquire the trigger level (positive and negative peaks of the trigger source waveform) it uses the Trigger ICs (U421 and U431), and the Trigger Comparators in FLIC (it writes to FLIC to reset the Trigger comparator latches, and reads from FLIC to get the status of the latches). To switch between free-running and triggered mode in AUTO LEVEL and AUTO trigger modes, it writes to the control register in FLIC; it switches to triggered mode when trigger frequency is sufficiently high and to free-run mode when too low.

7. Tracks the trigger level and ground with cursors. The cursors are displayed by directing the Readout system to display cursor characters, and using the DAC system to set the REF CURSOR and DELTA CURSOR level to match the trigger or ground point on the waveform.

8. Does automated measurements. Some measurements are knob-driven. They are:

   |← SEC →|

   |← 1/SEC →|

   |← PHASE→|

   |← VOLTS→|

   ⫛ VOLTS→|

When these measurements are running, a new digital value is displayed, and the cursor or delay-zone position is changed only when the user changes the setting of one of the continuous-rotation CURSOR/TIME POSITION controls. Other measurements are waveform-driven. They are:

DC
+PEAK
-PEAK
PK-PK
GATED +PEAK
GATED -PEAK
GATED PK-PK

When these measurements are running, a new digital value is displayed and the cursor position is changed each time a measurement cycle occurs. These measurements use the B trigger system; and, for DC, the low-pass circuit formed by U1101B and associated filter components (Diagram 3).

9. Calibrates the measurement system. The vertical and horizontal gains of the instrument are set by manual potentiometer adjustments; therefore, the Processor does not control the match between the waveform display and the graticule. However, it does adjust the measurement results to compensate for any error in the vertical or horizontal gain. (An example of this is that there could be more than 0.5% error in matching a time base signal to the graticule, but less than 0.5% error in a time measurement done on that signal).

In the Time Base calibration routine, the Measurement Processor uses the TB Cal signal, the Trigger circuitry, the A Sweep system, and U602 (FLIC) to find the match between the delay levels (REF DELAY and DELTA DELAY) and edges of the calibration signal. In the Vertical System calibration, the Processor uses the Voltage Reference Generator (U931, Diagram 7), the Readout System, the Vertical Preamplifiers, the Delay Line Driver, and the Vertical Comparator (U702) to find the match between Readout REF CURSOR and DELTA CURSOR levels and vertical outputs generated by the preamplifiers. It uses the Voltage Reference Generator, the Vertical Preamplifiers, and the Trigger circuitry to find the match between trigger levels and trigger signals picked off from the Vertical Preamplifiers.

MEASUREMENT PROCESSOR SIGNALS. Table 3-26 is a listing of signal name and function of the Measurement Processor signals.

Data Buffers

BUS 0 BIDIRECTIONAL BUFFER. Buffer U2515 communicates the serial bit data to and from the Measurement Processor. Seven data lines of the eight available are used in this application. The remaining one is connected to the +5 V supply to prevent random states and noise from affecting the other data lines in the device. The buffer is enabled via U2503B when both pins 38 (MCS0) and 39 ($\overline{DEN}$) of the Processor are low. The direction of transfer is controlled by the DT/$\overline{R}$ output of the processor.

BUS 1 BIDIRECTIONAL DATA BUFFER. Data communication to and from the Measurement Processor is via Buffer U2514. Direction of the data transfer is controlled by the DT/$\overline{R}$ (Data Transmit/$\overline{Received}$) output from the Measurement Processor. Data enabling occurs when pin 39 ($\overline{DEN}$) goes low while pin 38 (MCS0) is high.

BUS ARBITRATION GATES. The Bus Arbitration logic (U2503A and B, and U2506D) controls which Bus Buffer is enabled for communication with the Measurement Processor. This control logic is necessary since both buffers cannot be active at the same time. Bus 1 (U2514) is the eight-bit data communication bus, and Bus 0 (U2515) uses seven bits to communicate single-bit data to the Measurement Processor. On the Bus 0 AD0 signal line, the Measurement Processor sends the serial MB DATA to each of the operating mode Shift Registers and to SLIC (U600) and FLIC (U602). Additional arbitration is provided by U2503C to produce a $\overline{SLIC\ RD}$ strobe when the Measurement Processor wants to read the status of the Display Controller.

Table 3-26
Measurement Processor Signals

Signal Name	Signal Function
$\overline{SYS\ RESET}$	Master reset for the Processor board.
CLK 8M	8 MHz clock for the Readout Processor.
AD0–AD7	Multiplexed address/data lines for the Measurement Processor.
A8–A15	Address lines for the Measurement Processor.
A16–A17	Multiplexed address/status lines.
D0–D7	Data lines for Bus 1 (to memory and readout).
ADDR3–ADDR0	Latched addresses to Main board.
$\overline{RO\ INTR}$	Indicates the Readout System is busy when asserted.
MB RETURN	Return data from the Main board Shift Register 2.
SW BD DATA	Data from the switch board.
AD COMP	Output of the A-to-D Converter Comparator, U2306.
MB DATA	Bidirectional data line to/from the Main board.
TB CAL	Time-base calibration signal to trigger circuit.

Address Latches

MULTIPLEXED AD BUS ADDRESS LATCH. Since the AD0 through AD7 bits are multiplexed between address and data information, the addressing information needs to be latched to hold it for stable addressing (demultiplexed). The ALE (Address Latch Enable) signal from the Measurement Processor (pin 61) goes high when the address bits are stable, and the bits are latched into U2513. The device is permanently enabled by the grounded enable pin.

NONMULTIPLEXED ADDRESS BUS ADDRESS LATCH (U2512). Some of the nonmultiplexed address bits are also latched to maintain them between ALE strobes. The latching also prevents address line problems on the Main board from locking up the Measurement Processor. From U2512, latched addresses ADDR0–ADDR3 (A12–A15) are routed to the Display Controller (U600) for addressing the internal registers in that device. Those address lines are also applied to U501 (Diagram 4) for additional decoding to load the Analog Control Shift Registers with the serial data supplied from the MB DATA signal line. Two address lines (A16–A17) are latched in U2512 for use by the System ROM U2519.

Measurement Processor ROM

The operating code for the Measurement Processor is stored in the System ROM (U2519). Immediately after the Power On Reset ends, the Measurement Processor fetches the first command from the reset vector and begins running the program.

Measurement Processor RAM

The Measurement Processor RAM (U2521) provides storage space for intermediate-step calculation results, the front-panel settings, and the system calibration constants. The Processor RAM is battery backed up so that data stored during operation remains intact during periods of power off. When the instrument is turned on again, the stored front panel settings return the oscilloscope to the same operating state that was present at power off. The stored calibration constants preserve the accuracy of the measurement system (assuming the instrument is warmed up and was warmed up when the SELF CAL routine was last done). If the backup battery is dead, or if the stored calibration constants are lost for some other reason, the instrument will do a SELF CAL at power on. This restores accuracy to the instrument (unless the problem is a RAM fault, in which case the instrument cannot SELF CAL), but the battery circuitry should be checked and the battery replaced if necessary. Also, the SELF CAL routine should be run again after the instrument is warmed up to generate accurate calibration constants at the operating temperature. If the power-off front panel settings are lost for any reason, the power-on conditions that are set up are only restored in valid states (but not any predefined setup).

Address Decoder

The Address Decoders (U2517 and U2518) allow the Measurement Processor to enable any device on the busses for communication. Enabling signals $\overline{\text{BUS0 SEL}}$ and $\overline{\text{DAC SEL}}$ from the processor select the Address Decoder (either U2517 or U2518) that is actively decoding when the $\overline{\text{WR}}$ signal is low.

Backup Battery

To keep the data stored in the Measurement Processor RAM (U2521) during power off, a back-up battery system, BT2501 (and BT2502 in 2246 Opt. 1Y), CR2502, and R2506, is used. The battery supplies the energy to maintain the memory states of the static RAM. The battery is not rechargeable and has an operating life of one or five years, depending on battery type (see "FRONT PANEL SETUP MEMORY" in Table 1–1 for more information). When the instrument is on, CR2502 becomes reverse biased to prevent any reverse current; when off, CR2501 is reverse biased to isolate the back-up battery from the +5 V supply. If the battery requires replacement, observe the proper safety precautions in the handling and disposition of the replaced battery (see the WARNING under "Battery" in the Specification).

READOUT SYSTEM (Diagram 9)

Readout Processor

The Readout Processor (U2400) is an eight-bit microcomputer, containing its own internal ROM and RAM. The Readout Processor controls the display of text and cursors on the crt. It refreshes each character in the display every 16 ms. When the refresh rate becomes too high, refresh stops until the rate is low enough again. When the refresh rate becomes too low, refresh is done by taking control of the crt beam for a character at a time (Fast mode), until the refresh catches up. When the refresh rate is just right, refresh is done a dot at a time (Slow mode).

Each refreshed dot or character is refreshed with the appropriate display position attributes. The attributes define the characters or dots as:

Stationary text that stays put at a fixed point on screen (examples are scale factor and menu displays);

Cursor-level offset text whose position is determined by the REF CURSOR or DELTA CURSOR control levels only (examples are the time-measurement cursors); or

Cursor-level and position-level offset text whose display position is determined by both the cursor levels and the vertical position controls (an example is the TRACK TRIG LEVEL cursor).

The Readout Processor also communicates with the Measurement Processor system to obtain its RAM programming (for determining the display types) and report its status.

Measurement/Readout Processor Communication Protocol

A data byte is transmitted between the Measurement Processor and Readout Processor as follows:

1. The Measurement Processor waits until $\overline{\text{RO INTR}}$ is unasserted (the Readout Processor is ready to receive).
2. The Measurement Processor writes a byte to tri-state Write Latch U2401 by strobing $\overline{\text{RO BUF WR}}$; this asserts $\overline{\text{RO INTR}}$ (from Interrupt Latch U2417C and D) and causes an interrupt to the Readout Processor.
3. The Readout Processor, when interrupted, reads the Write Latch (U2401); it then unasserts $\overline{\text{RO INTR}}$ by clocking the Interrupt Latch to reset it. (This is the same clock used when the Readout Processor writes to tri-state Read Latch U2402.)

Communication from the Readout Processor to the Measurement Processor is done for diagnostics only and can be started only by the Measurement Processor. The Measurement Processor may check the communication link by comparing bytes sent to bytes received, query the Character Code RAM contents, and check the Character ROM identification header. The replies are all sent between the Readout Processor and Measurement Processor a byte at a time as follows.

1. The Readout Processor waits until $\overline{\text{RO INTR}}$ is asserted (the Measurement Processor is ready to receive).
2. The Readout Processor writes a byte to tri-state latch U2402; the clock that does the write also unasserts $\overline{\text{RO INTR}}$.
3. The Measurement Processor waits until $\overline{\text{RO INTR}}$ is unasserted, then reads tri-state latch U2402. It then strobes $\overline{\text{RO BUF WR}}$ to assert $\overline{\text{RO INTR}}$ (if another byte is coming from the Measurement Processor).

Display Refreshing

READOUT FIELD. A Readout field is refreshed in this way:

1. The display field is selected by latching the top address bits for the field into U2411 (FLD2-FLD0).
2. The mixing attributes for the field are latched into U2411 (MIX3-MIX0).
3. The position-tracking attributes for the field are latched into U2403 (CH 4 POS EN through CH 1 POS EN and RO TRACE SEP EN).
4. The starting address for the field (set by communication with the Measurement Processor) is latched into counters U2404 and U2405 (CH7-CH0).
5. One character at a time, all the characters in the field are refreshed until the top address for the field (set by communication with the Measurement Processor) has been refreshed.

READOUT CHARACTER. A Readout character is refreshed in this way:

1. $\overline{\text{RO RUN}}$ is asserted. This tells the Dot Refresher PAL (U2410) to begin the character refresh and releases the reset on the Dot Counter (U2407) and the Dot Refresher divider (U2409B).
2. For each dot in the character, the next dot is refreshed.
3. When the final dot is refreshed, $\overline{\text{EOCH}}$ (end-of-character at U2408 pin 17) becomes asserted, and $\overline{\text{Q EOCH}}$ (the latched version) becomes asserted. The Readout Processor unasserts $\overline{\text{RO RUN}}$, and increments the character address counter lines CH7-CH0.

READOUT DOT. A Readout dot is refreshed in this way:

1. $\overline{\text{RO REQ}}$ is unasserted (this causes RO HORIZ and RO VERT to control the crt horizontal and vertical) briefly to show the dot.
2. $\overline{\text{RO BLANK}}$ is unasserted then asserted (this unblanks then blanks the crt beam).
3. $\overline{\text{DOT CLK}}$ is asserted and unasserted (this increments the dot counter lines DOT4–DOT0).

FAST REFRESH. Fast refresh occurs when the Processor asserts $\overline{\text{FAST}}$ (whenever the refresh rate is too low) or when $\overline{\text{A GATE}}$ is unasserted (the sweep is in holdoff). In this mode, $\overline{\text{RO REQ}}$ is asserted at the start of a character, and unasserted at the end. Whenever $\overline{\text{RO REQ}}$ is asserted, the Readout system controls the crt beam intensity and the vertical and horizontal position of the beam. Dots are refreshed every 1.6 μs during fast refresh.

SLOW REFRESH. Slow refresh occurs when the Processor unasserts $\overline{\text{FAST}}$ (when the refresh rate is not falling behind in refreshing the readout) and $\overline{\text{A GATE}}$ is asserted. In this mode, $\overline{\text{RO REQ}}$ is asserted before each dot in a character, and unasserted after each dot.

Data flow for the dots in a character is roughly this:

1. FLD2–FLD0 give the current field being refreshed.
2. CH7–CH0 give the position of the character within that field. CH7–CH5 gives the row within the Readout (row 0 at the bottom, and 7 at the top), and CH4–CH0 gives the column (column 0 at the left, column 1f hex at the right).
3. Given the field and character position, the RAM (U2406) outputs the character code (the code for the character that is to be displayed at that position) on R7–R0.
4. DOT4–DOT0 gives the dot that is being refreshed within the character.
5. Given the character code and dot number, ROM U2408 outputs the position of the dot within the character. There are up to 31 dots in a character, in an array of 128 possible dot positions (16 vertical by 8 horizontal). DD6–DD3 gives the vertical position of the dot, and DD2–DD0 gives the horizontal position.
6. Given the row and column containing the character, and the vertical and horizontal position of the dot, U2412 generates the vertical analog current for the dot, and U2413 the horizontal analog current.
7. U2414 sets up the mixing for the vertical output signal (see Readout Position Mixer).
8. U2415 sets up the mixing for the horizontal output signal.

Interrupt Request Latch

When the Measurement Processor wants to write new display data to the Readout Processor or Character Codes RAM (U2406), it latches the new data into the Readout Write Latch (U2401) from the D0–D7 bus lines by issuing the $\overline{\text{RO BUF WR}}$ (readout buffer write) strobe to the Interrupt Request Latch (U2417). The output of U2417D (pin 11) is latched low and the Readout Processor is interrupted from its display processes ($\overline{\text{RO INTR}}$ goes low). The Readout Processor enables the Readout Write Latch and reads in the new data. When the character is received, the Readout Processor transfers the byte to the Character Code RAM and resets the Interrupt Request Latch (U2417D) to let $\overline{\text{RO INTR}}$ go high again.

Communication Latches

Communication from the Measurement Processor and the Readout Processor is done via the Readout Write Latch (U2401). The Readout Read Latch (U2402) is used only for diagnostics communication.

Character Position Address Counter

The starting address of a readout field to be displayed is loaded into the Character Position Address Counter (U2404 and U2405). The counter then sequences through the addresses of the characters loaded in Character Code RAM U2406. The vertical and horizontal position of the character being displayed is also defined by the output of the counter and is supplied to the Vertical and Horizontal DACS on the CH0–CH7 bus lines.

Character Codes RAM

The ASCII codes needed to display a field of readout are loaded into the Character Codes RAM (U2406) from the Measurement Processor via the Readout Writer Buffer (U2401) on the R0–R7 bus lines. When the field is displayed, the RAM is addressed in sequence by the Character Position Address Counter to output those codes for a display refresh. The field of codes accessed by the FLD0–FLD2

address lines defines either text (menus, measurement readouts, and error messages), vertical cursors, or horizontal cursors. Each field has space for up to 255 characters, and each field is superimposed over the others on the crt. The difference between vertical and horizontal orientation of the cursors types is done by rotating the character field 90 degrees. Hexadecimal addresses for a field are shown in Figure 3-7.

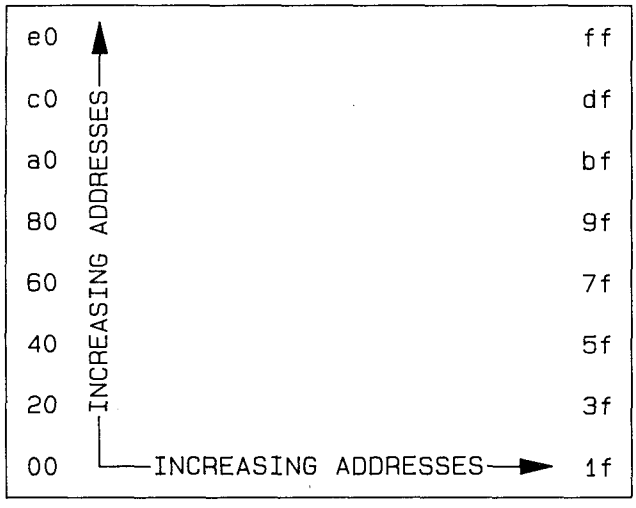

Figure 3-7. Display addresses.

Character Dot Counter

The Character Dot Counter (U2407A and B) is reset before the start of each character display. When $\overline{\text{RO RUN}}$ goes low (the start of a refresh cycle), the reset is released and the clock signal from the Dot Refresher (U2410) clocks the output of the counter through the number of counts needed to address all the dots in a character stored in the Character Dot Position ROM (U2408).

Character Dot Position ROM

The dot sequence and dot position to display each character is stored in the Character Dot Position ROM (U2408). Character addressing for the display is provided by the Character Codes RAM (U2406) on the R0–R6 bus lines. Addressing of the individual dots within a character is provided from the Character Dot Counter (U2407A and U2407B) on the DOT0–DOT4 signal lines. The pixel information output by the Character Dot Position ROM defines the vertical and horizontal position of the dot to be displayed. At the end of a character display, the $\overline{\text{EOCH}}$ signal is generated from U2408 pin 17 to the Dot Refresher (U2410) to let that device know that the character is finished and the next character can be started.

Dot Refresher

Dot Refresher U2410 is a programmable–AND, fixed–OR logic (PAL) device. It monitors $\overline{\text{RO RUN}}$ for its low states to determine when a refresh cycle starts. It then assert $\overline{\text{RO REQ}}$ to take control of the display for refreshing the displayed character dots. $\overline{\text{RO BLANK}}$ goes high then low again for each displayed dot. The clock signal then goes low and high again to clock the Character Dot Counter (U2407A and U2407B) to the address of the next dot in the character being refreshed. In Fast mode (when there is low demand for display time or the refresh rate is getting too slow), each character is completely refreshed. In Slow mode, the dots are refreshed at the rate of only one dot per each readout request.

When all the dots in a character have been refreshed, the $\overline{\text{EOCH}}$ (end–of–character) signal from Character Dot Position ROM U2408 tells U2410 that there are no more pixels to be refreshed in that character. $\overline{\text{RO REQ}}$ is then unasserted to release control of the display system and $\overline{\text{Q EOCH}}$ (U2410, pin 18) is sent to the Readout Processor to tell it that the Dot Refresher is finished with the character.

The Dot Refresher also asserts the $\overline{\text{POS EN}}$ signal low (pin 19) when readout associated with any of the traces is being displayed. That signal enables the Readout Position Enable Latch (U2403).

Divider/Counter

The 8 MHz System Clock is divided down to 4 MHz by Divider/Counter U2409A for clocking the Readout Processor and to 2 MHz to clock the Dot Refresher (after inversion by U2417B). The 2 MHz signal also clocks U2409B, a second divider that produces the signals that cycle the Dot Refresher through its internal states.

Readout Position Enable Latch

When the readouts must follow the Channel Vertical POSITION controls or the TRACE SEP control, the vertical position information must be added to the readout position. This job is done in the Vertical Position Switching circuitry (Diagram 2). The time of enabling and the readout position that is enabled is determined by the Readout Processor. The correct enabling data for the next field of characters to be displayed is latched into U2403 from the R0–R7 (bits 0–4 only) bus by the $\overline{\text{POS STB}}$ signal (U2403, pin

11). See Table 3-27. When a field is being refreshed, the outputs of U2403 are enabled by the $\overline{\text{POS EN}}$ signal from the Dot Refresher, U2410 pin 19.

Table 3-27
Position Enable Bit Assignment

b4	b3	b2	b1	b0	Value
x	x	x	x	0	Disable CH 1 position current
x	x	x	x	1	Enable CH 1 position current
x	x	x	0	x	Disable CH 2 position current
x	x	x	1	x	Enable CH 2 position current
x	x	0	x	x	Disable CH 3 position current
x	x	1	x	x	Enable CH 3 position current
x	0	x	x	x	Disable CH 4 position current
x	1	x	x	x	Enable CH 4 position current
0	x	x	x	x	Disable Trace Sep current
1	x	x	x	x	Enable Trace Sep current

Readout DACs

Vertical Character and Dot position data bytes are converted to analog current for eventual application to the Vertical Delay Line by Vertical Readout DAC U2412. The vertical signal current is applied to both signal mixer multiplexers (U2414 and U2415). When fixed position text is displayed, the output mixer selects a fixed position value to mix with the horizontal output signal to define the readout position on the display. When positionable text is displayed (such as time cursors), the cursor position signal is mixed with the horizontal output signal. That summed signal then defines (vertically) where a character (dot) is displayed on the crt. Vertical Readouts that follow the Channel Vertical POSITION controls (tracking cursors and associated text) have their position information summed with the Vertical Position Switching circuitry (Diagram 2) just before the Delay Line Driver.

Horizontal Character and Dot position data bytes are converted to analog current for application to the Horizontal Preamplifier (U802, Diagram 6) by Horizontal Readout DAC U2413. The horizontal signal current is applied to both signal mixer multiplexers (U2414 and U2415). When fixed position text is displayed, the output mixer selects a fixed position value to mix with the horizontal output signal to define the readout position on the display. When positionable text is displayed (such as time cursors), the cursor position signal is mixed with the horizontal character position signal. That summed signal then defines (horizontally) where a character dot is displayed on the crt. None of the readout (text or cursors) is positionable using the Horizontal POSITION control.

Field and Mixer Control Latch

Selection signals for switching the Readout Position Mixer multiplexers (U2414 and U2415) are latched into Field and Mixer Control Latch U2411 by the MIX STB output from the Readout Processor (U2400 pin 25). Three field selection bits used in addressing the Character Code RAM are also loaded from the data byte output from U2400 on the R0–R7 data bus. The MIX3–MIX0 bits select the combination of fixed, positionable, and character (dots) signals that are mixed to produce the required readout positions on the crt.

The Field signals (FLD0, FLD1, and FLD2) access the type of characters that are displayed (menus and readout labels, vertical cursors, or horizontal cursors). Each of the three fields contains space for 255 characters. Characters from each field are superimposable over the other field's characters in the display. The attributes implicitly affect the field specified by b0, b1, and b2 (b2 is always handled as if zero, even if not communicated as zero).

Readout Position Mixers

The Readout Position Mixer (U2414, U2415) selects either fixed or cursor-position voltages to mix with the character signals to position them in the display. Selection is done with the MIX0–MIX3 signal levels set by the Measurement Processor for the particular field of characters being displayed (see Table 3-28).

The 2246 1Y and 2246 Mod A Readout Output Mixer allows three modes of display to present the text and vertical or horizontal cursors.

TEXT OUTPUT MODE. The vertical output displays vertical text information, locked to crt vertical screen position. The horizontal output displays horizontal text information, locked to crt horizontal screen position.

Table 3-28

Field and Mixer Attribute Bit Assignment

MIX3	MIX2	MIX1	MIX0	NC	FLD2	FLD1	FLD0	Value
x	x	x	x	x	b2	b1	b0	Field number (0,1, or 2)
x	x	0	0	x	x	x	x	Route Horiz DAC to Horiz Ampl
x	x	0	1	x	x	x	x	Route Cursor0 to Horiz Amplifier
x	x	1	0	x	x	x	x	Route Cursor1 to Horiz Amplifier
x	x	1	1	x	x	x	x	Unassigned
0	0	x	x	x	x	x	x	Route Vert DAC to Vert Ampl
0	1	x	x	x	x	x	x	Route Vert DAC + Cursor0 to Vert Amplifier
1	0	x	x	x	x	x	x	Route Vert DAC + Cursor1 to Vert Amplifier
1	0	x	x	x	x	x	x	Route Horiz DAC to Vert Ampl

HORIZONTAL CURSOR MODE. The vertical output displays vertical text information, whose position is controlled by an analog cursor level control. The horizontal output displays horizontal text information, locked to crt horizontal screen position.

VERTICAL CURSOR MODE. The vertical output provides a ramp signal, locked to crt vertical screen position. The horizontal output matches the voltage of an analog cursor level control.

MIXER OPERATION. The readout system displays text in a pixel-type representation. For example, an underlined letter "A" may be represented as in Figure 3-8. Blackened spaces in the illustration denote a displayed pixel.

For each character, one pixel at a time is displayed by driving the vertical and horizontal outputs to values representing the vertical and horizontal position of a pixel within the character and then unblanking the Z-Axis.

Multiplexers U2414 and U2415 are ganged electronic switches that mix current and voltage settings. Vertical Readout DAC U2412 (vertical text generator) provides an output current from pin 2 that is proportionate to the vertical position of the pixel being displayed; the minimum output is 0 mA. Horizontal Readout DAC U2413 (horizontal text generator) provides an output current that is proportionate to the horizontal position of the pixel being displayed. Its minimum output is also 0 mA. The REF CURSOR and DELTA CURSOR levels are voltages that offset the text output for the type of cursor being displayed (vertical TIME cursors or horizontal VOLTS cursors). When straight text is to be displayed, dc levels for offsetting the vertical and horizontal text display outputs are added. Horizontal and vertical signals to be mixed for a particular readout are selected by the MIX0–3 outputs of latch U2411. The data is latched from the Readout Processor bus when $\overline{\text{MIX STB}}$ clock is generated by the Readout Processor.

Output Buffers

The Output Buffers (U2416A and U2416D—vertical, and U2416B and U2416C—horizontal) are voltage follower circuits that mix the signals selected by the Readout Position Multiplexers and buffer them for application to the vertical delay line (RO VERT) and the Horizontal Preamplifier (RO HORIZ).

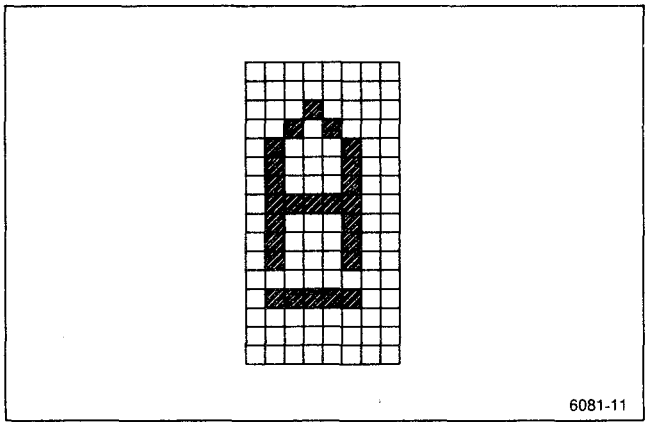

Figure 3-8. Character pixel arrangement.

The voltage at U2416 pin 14 depends on two things: the current from U2414 pin 13, and the voltage at U2414 pin 3. The possible displays are given in Table 3-29.

The voltage at U2416 pin 8 depends on two things: the current from U2415 pin 13, and the voltage at U2415 pin 3. The possible conditions are shown in Table 3-30.

SWITCH BOARD AND INTERFACE (Diagram 10)

The front-panel LEDs that backlight the switches and panel labels are schematically arranged in a matrix of eight rows and six columns. The front-panel switches are arranged in a matrix of 16 rows and six columns. Each LED and switch is connected to a distinct row/column intersection, with a column of LEDs and a column of switches being common and enabled by the same signal.

At intervals of about 2 ms, a column of LEDs is refreshed (turned on or off) and the status (open or closed) of the connected column of switches is read. All six columns of LEDs and the six columns of switches are completely refreshed and checked every 12 ms. The timing is fast enough to prevent flicker of the LEDs and to catch a push button closure.

LED Refresh

Assume LED column AS0 is being refreshed. First, the LED Cathode Register, U2524, is loaded with a data byte from the Measurement Processor. That byte defines the LEDs that are on for that column, and the outputs of Cathode Driver U2525 for the "on" LEDs are low. Then, a high on the D0 bit of the Measurement Processor Data Bus is latched into LED Anode Register U2523 with the $\overline{\text{LED ANODE CLK}}$ signal. That high turns on the associated Darlington transistor (Q2506 for the AS0 column), and the LEDs in that column that also have their cathodes low from U2525 are turned on.

Table 3-29
Display Possibilities

Readout Type	U2414-3	U2414-13
Stationary Text	0.6 V	U2412 output
Horizontal Ref Cursor	REF CURSOR	U2412 output
Horizontal Delta Cursor	DELTA CURSOR	U2412 output
Vertical Ref Cursor	0.6 V	U2413 output
Vertical Delta Cursor	0.6 V	U2413 output

Table 3-30
Possible Signal Conditions to U2416

Readout Type	U2415-3	U2415-13
Stationary Text	2.0 V	U2413 output
Horizontal Ref Cursor	2.0 V	U2413 output
Horizontal Delta Cursor	2.0 V	U2413 output
Vertical Ref Cursor	REF CURSOR	0 mA
Vertical Delta Cursor	DELTA CURSOR	0 mA

Switch Reading

At the same time the AS0 LED column is refreshed, the connected AS0 switch column is pulled high through CR2006. The switch status (low for open or high for closed) for the active switch column is parallel loaded into the Switch Board Shift Registers (U2001 and U2002). This switch status data is then shifted out serially (by 15 $\overline{\text{SW BD SR SHIFT}}$ clocks) to the Measurement Processor on the SW BD DATA return line. The position of a high in the serial data stream, and knowing the active column, tells the Measurement Processor the switch in column AS0 that is closed (the CH 1 VOLTS/DIV setting). Columns with push-button switches may or may not have a switch closed. A switch closure is interpreted by the Measurement Processor, and any new operating conditions needed (determined from the firmware routines called up to handle a particular switch closure) are set up.

At the next 2 ms interrupt, the Measurement Processor loads new data into Cathode Register U2524 to enable the LED rows, and the column is advanced to enable the A01 column for refresh and switch reading. The process described is continual while the oscilloscope is on.

Part of the Measurement Processor routine stores the new front panel settings in the System RAM each time a change is made. At power on (after being turned off), the stored front-panel settings are recalled from the System RAM to return the oscilloscope to the same operating state that existed at power off (with some exceptions).

Diagnostic

When the Measurement Processor is running the register checks during the DIAGNOSTIC, it can check the condition of registers U2001 and U2002. Serial data is placed on the AS0 line from the D0 bit of the Measurement Processor data bus. That data is serially shifted through the two registers to the SW BD DATA return line. The Measurement Processor compares the returned data stream with what was sent. A difference in the data bits shows an error; a correct comparison passes the test.

ADC AND DAC SYSTEM (Diagram 11)

The ADC and DAC System permits the Measurement Processor to provide analog control voltages to the circuitry under its control and to find out certain analog voltage levels that it must have to do its control and measurement functions.

Pot Multiplexer Latch

Latch U2313 latches data from the data bus (D0–D7) to control multiplexers U2308 and U2309 on this diagram and U506 on Diagram 7.

Front-Panel Control Multiplexers

Multiplexers U2308 and U2309, controlled by the Measurement Processor via Pot Mux Latch U2313, select the front-panel control levels that are compared with the output of the D-to-A Converter (U2302). The result of that comparison is sent via signal line AD COMP to the Measurement Processor (U2501, Diagram 8).

Input Data Latches

Binary data bytes to be converted to analog voltages are loaded into two latches (U2300 and U2301). Data Latch U2301 latches data to the DAC Multiplexer (U2303). Data Latch U2300 latches data to D-to-A Converter (U2302).

Digital-to-Analog Converter

The D-to-A Converter (U2302), using 12 data bits, can produce 4096 discrete output signal current levels from 0 to 2 mA. Signal current flows through R2303 to the +2.5 V reference voltage. The resulting voltage drop across the resistor moves the voltage at pin 3 of voltage follower U2314 away from +2.5 V toward 0 V and below. When there is 0 mA output, the voltage at pin 3 is +2.5 V. At maximum output current, the voltage at pin 3 is −2.5 V. Voltage follower U2314 buffers the voltage and applies it to the input pin of analog multiplexer U2303, where it is directed to the control circuit selected by the Measurement Processor.

A-TO-D CONVERSION. The output from U2314 is also applied to comparator U2306. When analog-to-digital conversion is being done, the Measurement Processor drives the DAC to produce comparison voltage levels in a binary search pattern. The output of U2306 is monitored to determine the smallest DAC input change that will produce an output change from the comparator. That value is then used as the digital representation of the analog voltage applied to the other pin of the comparator from the output of Multiplexer U2308 or U2309. Signals on that multiplexed line are the front panel potentiometers' wiper voltages and the probe-code levels.

Sample-and-Hold Circuits

The analog voltages from the multiplexer U2303 remain stable only for the short period of time that the DAC is at a fixed output level. Control voltages to the analog circuitry must remain constant except

for changes to the control settings. Those control voltages are held constant between refreshes by sample-and-hold circuits formed by a capacitor (to hold the voltage) and a voltage follower (to buffer the voltage held by capacitor). The voltage follower circuits are provided by the operational amplifiers of U2304 and U2305. Each of the hold voltages are protected from humidity degradation of the voltage follower's high-impedance input by an active guard shield on the circuit board. Extra noise filtering for two of the control voltages (REF DELAY and DELTA DELAY) is provided by using an RC pi-type filter input circuit to the voltage follower.

POWER SUPPLY (Diagram 12)

The Power Supply (Diagram 12) provides the various low-voltages needed to operate the 2246 1Y and 2246 Mod A and the high-voltage required by the cathode-ray tube (crt). The supply circuitry is arranged in the following functional blocks: AC Input, Primary Power Rectifier, Start-Up circuit, Preregulator Control circuit, Preregulator Power Switching circuit, Inverter Control circuit, Inverter Power Switching circuit, Low-Voltage Secondary Supplies, and High-Voltage Supply (see Figure 3-9).

Ac power via the power cord is rectified and filtered by the Primary Power Rectifier to supply the dc voltage to Preregulator circuitry. The output voltage level from the Primary Power Rectifier depends on the ac supply voltage level and may vary between about 125 V and 350 V. This unregulated, filtered, dc voltage is supplied to the Preregulator Start-Up circuit and the Preregulator Switching circuit. The Preregulator Power Switching circuit supplies +44 Vdc output power to drive the Inverter Power Switching circuit.

The +44 V Preregulator output voltage is switched by the Inverter Power Switching circuit to produce an alternating current through the primary of the Inverter power transformer. The current source to the Inverter switching transistors is monitored and regulated by the Inverter Control circuit to maintain a constant output voltage level across the transformer secondaries.

The Low-Voltage Secondary Supplies rectify and filter the low-voltage secondary ac voltages to provide the dc power requirements for the instrument. Two other secondary windings on the Inverter Power Transformer are used in the High-Voltage Supply, a high-voltage winding and a crt filament winding. Voltage from the high-voltage winding is further multiplied and converted to dc voltage for the crt anode, cathode, and intensity-grid voltages.

Both overvoltage and overcurrent protection are provided to protect the oscilloscope circuitry from further damage if a circuit component fails.

Ac Input

Applied source voltage is input to the Primary Power Rectifier via surge protection circuitry and noise filtering circuitry. A sealed line filter (FL2201), L2207, L2208, C2214, C2213, C2216, C2215, R2260, R2227, and R2228 form a low-pass filter designed to prevent transmission of high-frequency noise signals either into or out of the instrument. Bleeder resistor R2215 across the input line filter drains off any charge retained by the capacitors in the input circuitry when the power is disconnected. Thermistor RT2201 prevents a sudden rush of input current into the rectifier and filter capacitor, C2202, when the power switch is turned on. The thermistor presents a relatively high resistance when cold, then quickly reduces to a low value when warmed up. Varistor VR2204 acts as a surge limiter to reduce the effects of any power line surges that may damage the input circuit components. The varistor is a voltage-sensitive device that quickly reduces its resistance value when its voltage limits are exceeded. Line fuse F2201 protects the instrument from additional damage in case of of a severe short in the power supply.

Primary Power Rectifier

Rectification of the input ac source voltage is done by rectifiers CR2231-CR2234. Simple capacitive filtering of the rectifier output is done by C2202. The filtered output voltage may range between about 125 Vdc and 350 Vdc, depending on the amplitude of the ac input voltage. A line trigger signal is picked off by T2206 for use when the Trigger SOURCE is set to LINE. Bleeder resistor R2256 drains off the charge on C2202 when the instrument is turned off.

Start-Up Circuit

The Start-Up circuit provides the operating supply voltage to the Preregulator. At power on, C2204 in the Start-Up circuit begins charging through R2203 and R2204 from the output of the Primary Power Rectifier. When the voltage across C2204 reached 20 V, the voltage at the base of Q2204 is about 6.8 V. This base voltage level causes Q2204 to conduct (there is a 6.2 V zener diode in the emitter path), and Q2211 also is then biased on. Positive feedback to the base of Q2204 (from the collector of Q2211 through R2220) then keeps both transistors on. The dc voltage to U2201 (Vcc) for start up (and continued running after start up) is provided by the charge on C2204 via Q2211.

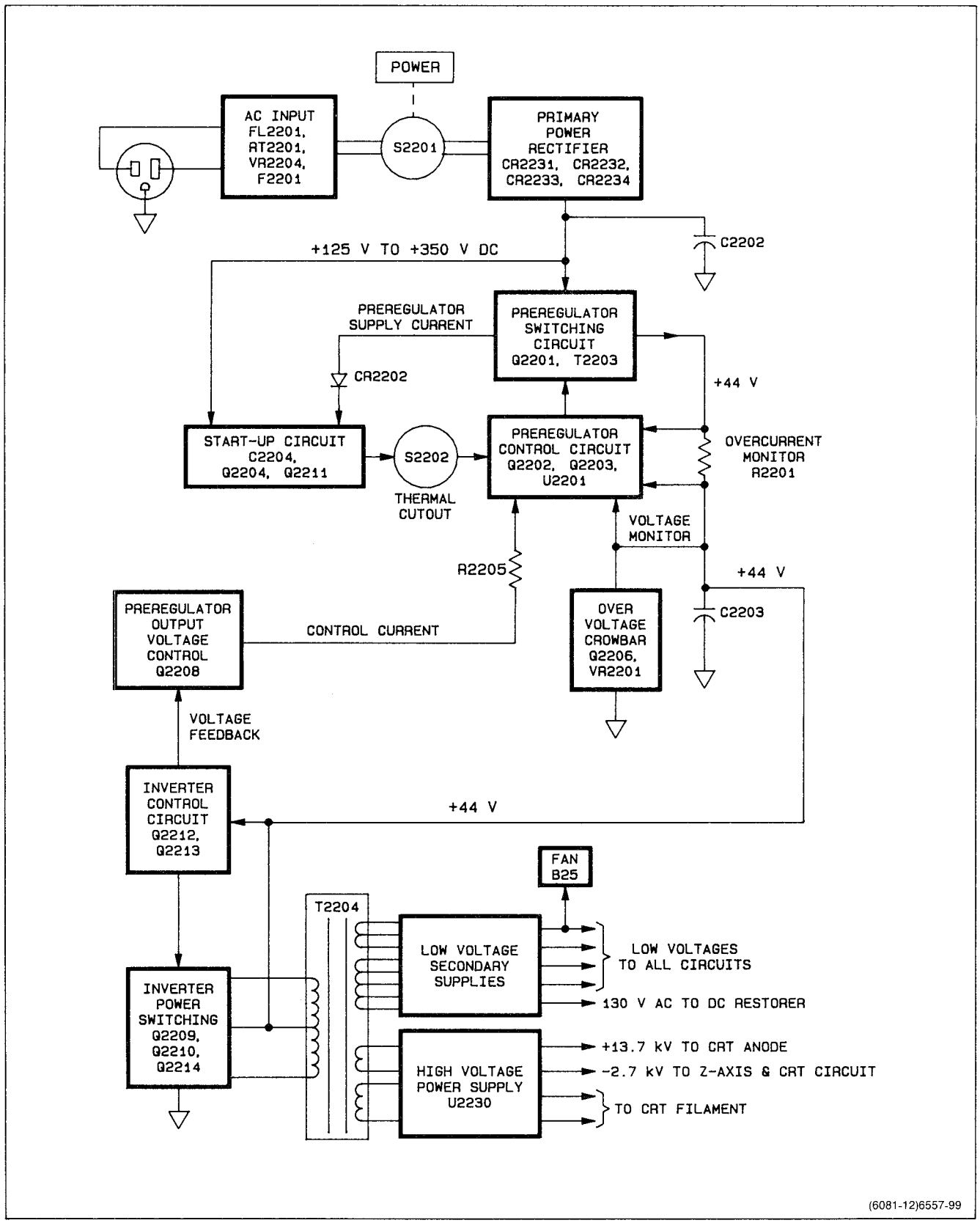

Figure 3–9. Power Supply block diagram.

With U2201 on and drawing current from C2204, the voltage across C2204 begins to fall. If the Preregulator output rises to +44 V before the voltage across C2204 falls to 10 V, then CR2202 becomes forward biased, and current pulses are supplied by a winding (pins 8 and 9) on T2203 to keep C2204 charged (and U2201 operating).

If the Preregulator output does not rise to +44 V within the time it takes to discharge C2204 below 10 V (about 1/10 of a second), the voltage at the base of Q2204 will drop too low for the feedback voltage to keep it on. That will cause Q2211 to also shut off. The start-up cycle repeats when the voltage across C2204 again reaches 20 V (recharging from the output of the Primary Power Rectifier output via R2203 and R2204). Continued failure of the Preregulator to start up and the repeated attempts to do so is called the "Chirp" mode. Zener diode VR2206 prevents the voltage across C2204 from exceeding about 30 V if no start-up attempt occurs.

Preregulator Control Circuit

The Preregulator Control IC, U2201, is a pulse-width modulator used to control the on time of Preregulator Switching FET Q2201. It contains an oscillator, comparators, voltage and current error amplifiers, and logic circuitry that controls its operation. The modulated output pulses drive switching transistor Q2201 through a buffer amplifier composed of Q2202 and Q2203. Pulse width (the time that FET Q2201 is on) is inversely proportional to the control voltage at pin 3 of U2201 (i.e., a lower voltage at pin 3 makes the pulse width wider to keep Q2201 on longer.

Pin 7 of U2201 is the IC ground reference, and it is tied directly to the +44 V output voltage. Therefore, the Preregulator IC and the Start-Up circuitry operating potentials "float" on the regulated output voltage (developed across C2203).

Pin 2 of U2201 is the current-summing node to the voltage-error amplifier. The error amplifier will try to keep the voltage on pin 2 equal to the voltage on pin 1 (the +44 V supply voltage). The error amplifier maintains pin 2 at +44 V by raising (or lowering as necessary) the voltage at pin 3. This raises (or lowers) the voltage across C2203 so that less (or more) current will be drawn out of the current summing node.

The major current injected into the summing node is from the regulated 5 V output, from pin 12 of U2201, via R2212. That current is about 0.6 mA. The current through R2206 adds to the current shunted by the Preregulator Output Voltage Control transistor, Q2208, to produce about 0.6 mA to keep the current into and out of the summing node balanced. The actual current through R2206 is the output voltage (+44 V across C2203) divided by the resistance value of R2206 (100 kΩ) or about 0.4 mA.

SOFT START. At the initial turn-on of the instrument, C2203 is discharged. If no action were taken to prevent it, the initial charging current to that capacitor would exceed safe limits. To avoid such a problem, a "soft start" of the charging path is done.

At turn-on, the +5 V output of U2201 steps to +5 V immediately. A +5 V pulse is coupled to pin 4 of U2201 via C2207. This pin is the "dead time control" input, and when it is high, the dead time between switching pulses to Q2201 is increased to 100%. Switching transistor Q2201 does not turn on, and no charging of C2203 occurs. Then, as C2207 charges, the voltage on pin 4 begins to decrease toward the ground reference value (on pin 7). This decreases the dead time, allowing increasingly wider conduction pulses to occur.

The on-time gradually increases until the charging current is limited by the internal current limit amplifier of U2201. At that point, the Preregulator is acting as a current source. When the voltage across C2203 reaches +44 V, the voltage error amplifier starts to limit the output, and the Preregulator has reached its operating level and acts as a voltage source.

CURRENT LIMIT. The output current of the Preregulator switching FET, Q2201, is limited to a safe value. If the current exceeds 2.4 amperes, the voltage dropped across R2201 causes pin 14 of U2201 (one input of the current limit amplifier) to exceed the voltage on pin 13 of U2201 (the other input pin of the current limit amplifier). The output of the current limit amplifier then goes high, raising the voltage on pin 3 of U2201. Increased voltage on pin 3 narrows the width of the turn-on pulses to switching FET Q2201 and limits the output current.

Usually, with a circuit failure, the excess loading remains, and the pulses remain narrow. The Preregulator Control IC then shuts down because the charge on C2204 is not maintained via the Preregulator supply winding on T2203, and the Preregulator goes into the chirp mode (continual shut down and restart attempts).

OVERVOLTAGE CROWBAR. If the output voltage across C2203 exceeds about +51 V, VR2201 in the crowbar circuit conducts. The gate of SCR Q2206 then rises; and, if the rise is enough, the SCR latches on. When on, Q2206 shorts out C2203, and the current limit circuit causes the switching pulses to Q2201 to become very narrow. Preregulator IC U2201 then shuts down (as described in the Current Limit discussion). The Preregulator will attempt a

restart after about half a second, but will shut down again if the overvoltage condition continues (this is the "chirp" mode).

PREREGULATOR OUTPUT CONTROL. The voltage across the Inverter current source transistor, FET Q2214, is monitored by Q2208 (from the collector voltage of either Q2209 or Q2210). That voltage has to be maintained at the proper level to provide enough regulation room for the secondary supply voltages and still not dissipate more power than necessary in Q2214. If the voltage across Q2214 is too high, Q2209 is biased on harder and draws more current from the input summing node (pin 2 of U2201) of the voltage error amplifier in U2201, the Preregulator Control IC. The output of the error amplifier at pin 3 of U2201 then rises, and the width of the switching pulse to the Preregulator Switching circuit narrows to decrease the +44 V output.

The Inverter Control circuit (Q2212 and Q2213) senses the decreased voltage across the primary of the Inverter power transformer (T2204) and responds by driving Q2214, the Inverter current-source transistor, harder; thereby decreasing the voltage across it.

Control response time in the feedback loop just described is long; but it does not need a fast response time, since the circuit only determines the power dissipation in Q2214. Compensation of the circuit to prevent oscillation is done by a low-pass filter (10 Hz cutoff) formed by C2238, R2205, and R2246.

Preregulator Switching Circuit

The Preregulator Switching circuit provides the energy required to keep C2203 charged up to +44 V. Switching FET Q2201 is driven by the pulse-width modulated output of the Preregulator IC (U2201) via a buffer amplifier circuit. The Preregulator IC controls the on-time to maintain the voltage across C2203 at +44 V.

For the following discussion of the switching circuit, assume that Q2201 is off, C2201 is charged to the rectified line voltage (160 V from the Primary Power Rectifier), and the +44 V supply is up and driving a circuit load.

When the Preregulator IC turns on Q2201, the drain of Q2201 is immediately clamped to 44 V. This forces 116 V (160 V - 44 V) across pins 6 and 7 of T2203. Current begins increasing linearly in that coil as Q2201 supplies current to the +44 V supply. With the one end of C2201 clamped to +44 V, and C2201 being charged to +160 V, the other end of C2201 is pushed down with the anode of CR2201 going to -116 V (44 V - 160 V). This places 116 V (0 - 116 V) across pins 1 and 2 of T2203 and current begins increasing linearly in that coil, also flowing through Q2201 to the +44 V supply. After a time determined by Preregulator IC U2201, the drive signal to Q2201 is switched low, and the switching FET is turned off.

The current flowing in both coils of T2203 must continue as the magnetic field collapses, but it cannot flow through Q2201. The only available path is through CR2201 (previously biased off). The polarity reversal of the voltage across T2203 that occurs forward biases CR2201, and permits the energy in the magnetic field to be released to the +44 V supply.

When CR2201 is forward biased its cathode is clamped to the +44 V supply level. With C2201 still charged to +160 V (the supply voltage), its positive end is pushed up to 204 V (44 V + 160 V). Now there is -44 V (160 V - 204 V) across the coil of T2203 from pin 7 to pin 6 and -44 V (0 - 44 V) from pin 2 to pin 1 (see Figure 3-10). Since C2201 is in parallel with C2202 for dc voltages (coils are shorts to dc), the dc voltage across C2201 can change very little. The capacitance of C2201 is large enough that the charging and discharging currents do not have enough time to change the voltage across C2201 in normal operation.

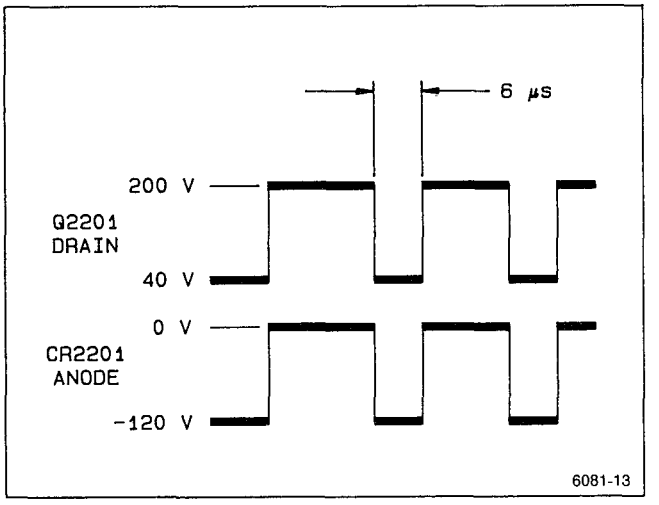

Figure 3-10. Preregulator switching waveforms.

The two coils of T2203 need not be coupled magnetically for the circuit to operate. Both coils are wound on the same core for convenience. Transformer action is minimal because the waveforms impressed across both coils are nearly identical.

After a time controlled by the Preregulator IC (the dead time), the on-time cycle for Q2201 repeats. On time depends on the line voltage level; a higher

line voltage level means a shorter on time of Q2201 is needed to maintain +44 V across C2203.

Inverter Power Switching Circuit

The Inverter Power Switching circuit is composed of switching transistors Q2209 and Q2210, current source transistor Q2214, inverter power transformer T2204, base-drive transformer T2205, and associated components. Current supplied by the +44 volts output from the Preregulator circuit is alternately switched through each side of the center-tapped primary of T2204 to drive the loads on the secondary windings of the inverter transformer.

INVERTER STARTER. As the Preregulator turns on, the +44 V supply increases from 0 V. The increasing voltage forward biases CR2236 and charges C2248 through the base-emitter junctions of Q2209 and Q2210. Current is drawn through each side of T2204, from the center tap, as the transistors conduct. One of the two transistors will have a slightly higher gain than the other, and its collector voltage will decrease more than the other. The voltage difference across the primary of T2204 also appears across the primary winding of T2205, and a feedback voltage is induced in the secondary winding of T2204. The polarity of the transformer is such that the conduction of the higher gain transistor is reinforced (positive feedback), and that transistor quickly saturates while the other is cut off. One end of the primary of T2204 is driven toward ground while the other end is opened. After about half a second, C2248 charges up, CR2236 becomes reverse biased, and that path for current through the conducting transistor is blocked.

If the Inverter Power Switching circuit stops, the Inverter Starter circuit will not restart it until C2248 is discharged. Furthermore, C2248 will not discharge until the +44 V supply falls.

INVERTER POWER SWITCHING. Switching is started by one or the other of either Q2209 or Q2210 conducting more that the other, and circuit action biases the other one off. Assume for this discussion that Q2210 is biased on and Q2209 is off. Current flows through current-source FET Q2214, on-transistor Q2210, and half of the primary of T2204 (pins 9 and 11). The voltage drop across current-source transistor Q2214 holds the emitter voltage of Q2209 and Q2210 at 3 V. Voltage across pins 9 and 11 is therefore 41 V (44 V - 3 V).

Through autotransformer action, 41 V is induced in the other half of the primary winding of T2204 from pin 8 to the center-tap pin. That voltage adds to the 41 V from pins 9 to 11 to produce a potential of 82 volts across the primary of switching transformer T2205. Current rapidly ramps up through the primary of T2205 and induces a positive feedback base current in one-half of its center-tapped secondary that keeps Q2210 turned on. Current in the other half of the secondary biases on CR2227 to prevent a high reverse base-to-emitter voltage from being developed across Q2209.

After about 25 μs, the current through the primary of T2205 saturates the magnetic core and the primary impedance of the transformer drops to a low value. When saturation occurs, the impedance presented by L2206 by comparison to that of T2205 is large, and most of the voltage applied from the secondary of T2204 is then dropped across L2206. The secondary voltage of T2205 drops to zero, and with no base-drive current to Q2210, that transistor switches off.

With both Q2209 and Q2210 off, the magnetic energy stored in the primary of T2205 and in L2206 causes current to flow in the primary of T2204, reversing the voltage polarity on this winding. The voltage reversal is not instantaneous because of the parasitic capacitance of the T2204 windings. When the reverse voltage gets high enough, base current flows to Q2209 and that transistor turns on. The cycle then repeats with current flow through T2204 reversed. This process induces ac in the various secondary windings of the inverter power transformer.

INVERTER CONTROL LOOP. Whenever either Q2209 or Q2210 is on, the collector voltage of the on transistor forward biases either CR2205 (if Q2209 is on) or CR2204 (if Q2210 is on). Capacitor C2219 is then charged to nearly the same voltage that is applied to the center tap of the primary winding of Inverter Transformer T2204.

A resistive voltage divider formed by R2239, R2238, and potentiometer R2252 (+7.5 V ADJUST) applies a fraction of the voltage across C2219 to the base of Q2213 (one-half of a differential amplifier formed by Q2212 and Q2213). The voltage on the base of Q2213 is compared to a voltage on the base of Q2212 that is referenced back to the +44 V center tap voltage of T2204. If the collector voltage of the conducting inverter switching transistor (Q2009 or Q2210) is not the correct level (about 3 V), the gate voltage of current-source FET Q2214 will be raised or lowered as needed to correct the error.

Low-Voltage Secondary Supplies

The low-voltage power supply circuitry on the pin 12 to pin 22 and pin 13 to pin 15 secondary windings of

the Inverter power transformer consist of rectifier and filter components only. All the regulation is done by the Preregulator and Inverter Control circuitry in the primary side of the transformer. Both half-wave and full-wave rectifiers are used, and either simple capacitor or capacitive-input PI filter circuits are used. Rectifier and filter type used for each of the secondary voltages depends on the load requirement. A single 130 Vac output from pin 12 of T2204 supplies the drive to the Z-Axis dc restorer circuitry. Power for the blower fan is supplied by the -15 V power supply line.

The center-tapped secondary winding from pins 13 to 15 of T2204 is used for the +5 V and -5 V supplies. Both are full-wave rectified and filtered using capacitive-input PI filters.

High-Voltage Supply

The high-voltage power supply uses two secondary windings of T2204: one for high-voltage multiplier U2230 and the other for the crt filament. Flying leads from the top of the transformer make the circuit connections into the high-voltage circuitry. The crt filament winding consists of a few turns of insulated wire.

The high-voltage winding attaches directly to the HV Multiplier. Outputs from HV Multiplier U2230 are the 13.3 kV to the crt anode via a high-voltage-insulated connecting lead and the -2.7 kV supplied to the crt cathode, focus grid, and intensity grid. The -2.7 kV supply is filtered by a two-section capacitive input RC filter. A neon lamp across the second section of the filter provides protection against arcing if there is a failure that can cause a large difference of potential to develop between the crt heater and cathode circuits.

MAIN BOARD POWER DISTRIBUTION (Diagram 13)

The Main Board Power Distribution diagram schematically displays the distribution paths and decoupling circuits for the low voltages from the Power Supply. The supply and ground connections to the various integrated circuits in the instrument are also shown. Use this diagram to aid circuit tracing when trying to locate a power supply loading problem associated with the Main Board.

PROCESSOR BOARD POWER DISTRIBUTION (Diagram 14)

The continuing power distribution from the Main Board to the top board (Processor Board, A16) is depicted in the Processor Board Power Distribution schematic diagram. Use Diagram 14 to aid in locating power supply loading problems that are isolated to the Processor Board.

INTERCONNECTION DIAGRAM (Diagram 15)

Circuit board interconnections with the plug, jack, pin numbers, and signal names shown are found in schematic Diagram 15. The diagram is useful in checking continuity of cable runs and signal paths from board to board through the instrument.

PERFORMANCE CHECK PROCEDURE

INTRODUCTION

PURPOSE

This Performance Check Procedure verifies the Performance Requirements of the 2246 1Y or 2246 Mod A as listed in the Specification (Section 1) and helps determine the need for readjustment. These checks may also be used as an acceptance test or as a preliminary troubleshooting aid.

You do not have to remove the wrap-around cabinet from the 2246 1Y or 2246 Mod A to do this procedure. All checks can be made with controls and connectors accessible from the outside.

TEST EQUIPMENT REQUIRED

Table 4-1 lists all the test equipment required to do the Performance Check Procedure. Test equipment specifications described are the minimum necessary to provide accurate results. For test equipment operating information, refer to the appropriate test equipment instruction manual.

When you use equipment other than that recommended, you may have to make some changes to the test setups. If the exact example equipment in Table 4-1 is not available, use the Minimum Specification column to determine if any other available test equipment might be adequate to do the check.

PERFORMANCE CHECK INTERVAL

To ensure instrument accuracy, check the performance of the 2246 1Y or 2246 Mod A after every 2000 hours of operation, or once each year if used infrequently. If the checks indicate a need for readjustment or repair, refer the instrument to a qualified service person.

NOTE

The silver-oxide batteries used in the 2246 1Y (instruments serial numbered B714999 and below) MUST BE REPLACED AT LEAST EVERY 12 MONTHS to ensure proper operation of the instrument.

PREPARATION

This procedure is divided into subsections to let you check individual sections of the instrument when it is not necessary to do the complete Performance Check. An Equipment Required block at the beginning of each subsection lists the equipment from Table 4-1 that is needed to do the checks in that subsection.

The initial front-panel control settings at the beginning of each subsection prepare the instrument for the first step of the subsection. Do each of the steps in a subsection completely and in order to ensure the correct control settings for steps that follow. To ensure performance accuracies stated in the Specification (Section 1), let the instrument warm up for 20 minutes and run the SELF CAL MEASUREMENTS routine.

To run the SELF CAL MEASUREMENTS routine:

Press the top and bottom menu-item select buttons to display the SERVICE MENU. Underline and select SELF CAL MEASUREMENTS. Press RUN to start the routine, then QUIT to return to the normal oscilloscope mode.

NOTE

Performance accuracies are ensured only when the SELF CAL MEASUREMENTS are done AFTER the 20-minute warmup.

Table 4-1
Test Equipment Required

Item and Description	Minimum Specification	Use	Example of Test Equipment
Leveled Sine-Wave Generator	Frequency: 250 kHz to above 150 MHz. Output amplitude: variable from 10 mV to 5 V p-p. Output impedance: 50 Ω. Amplitude accuracy: constant within 1.5% of reference frequency to 100 MHz.	Vertical, horizontal, triggering, measurement bandwidth, and Z-Axis checks and adjustments.	TEKTRONIX SG 503 Leveled Sine-Wave Generator.[a]
Calibration Generator	Standard-amplitude signal levels (dc and square wave): 5 mV to 50 V. Accuracy: ±0.25%. High-amplitude signal levels: 1 V to 60 V. Repetition rate: 1 kHz. Fast-rise signal level: 1 V. Repetition rate: 1 MHz. Rise time: 1 ns or less. Flatness: ±0.5%.	Signal source for gain and transient response checks and adjustments.	TEKTRONIX PG 506A Calibration Generator.[a]
Time-Mark Generator	Marker outputs: 5 ns to 0.5 s. Marker accuracy: ±0.1%. Trigger output: 1 ms to 0.1 μs time-coincident with markers.	Horizontal checks and adjustments. Display adjustment. Time cursor checks.	TEKTRONIX TG 501A Time-Mark Generator.[a]
Function Generator	Range: less than 1 Hz to 100 kHz; sinusoidal output; amplitude variable up to greater than 10 V p-p open circuit with dc offset adjust.	Low-frequency checks, X-Y phase check.	TEKTRONIX FG 502 Function Generator.[a]
Coaxial Cable (2 required)	Impedance: 50 Ω. Length: 42 in. Connectors: BNC.	Signal interconnection.	Tektronix Part Number 012-0057-01.
Precision Coaxial Cable	Impedance: 50 Ω. Length: 36 in. Connectors: BNC.	Used with PG 506A Calibration Generator and SG 503 Sine-Wave Generator.	Tektronix Part Number 012-0482-00.

[a]Requires a TM500-series power module.

Table 4-1 (cont)

Item and Description	Minimum Specification	Use	Example of Test Equipment
Termination (2 required)	Impedance: 50 Ω. Connectors: BNC.	Signal termination.	Tektronix Part Number 011-0049-01.
10X Attenuator	Ratio: 10X. Impedance: 50 Ω. Connectors: BNC.	Triggering checks.	Tektronix Part Number 011-0059-02.
2X Attenuator	Ratio: 2X. Impedance: 50 Ω. Connectors: BNC.	Triggering checks.	Tektronix Part Number 011-0069-02.
Adapter	Connectors: BNC male-to-miniature-probe tip.	Signal interconnection.	Tektronix Part Number 013-0084-02.
Alignment Tool	Length: 1-in shaft. Bit size: 3/32 in. Low capacitance; insulated.	Adjust TRACE ROTATION pot. Adjust variable capacitors and resistors.	Tektronix Part Number 003-0675-00.
Test Oscilloscope	Bandwidth: 20 MHz.	Z-Axis response adjustment.	TEKTRONIX 2246A.
Dual-Input Coupler	Connectors: BNC female-to-dual-BNC male.	Signal interconnection.	Tektronix Part Number 067-0525-02.
T-Connector	Connectors, BNC.	Signal interconnection.	Tektronix Part Number 103-0030-00.
Precision Normalizer	Input resistance: 1 M Ω. Input capacitance: 20 pF.	Input capacitance adjustments.	Tektronix Part Number 067-1129-00.
TV Signal Generator	Provide composite TV video and line sync signals.	Check TV Trigger circuit.	Tektronix 067-0601-00. Calibration fixture with 067-5002-00 (525/60) and 067-5010-00 (1201/60) plug-ins.
Digital Multimeter (DMM)	Dc volts range: 0 to 140 V. Dc voltage accuracy ± 0.15%. 4 1/2 digit display.	Power supply voltage checks and adjustments.	Tektronix DM 501A Digital Multimeter.[a]
BNC Coupling Capacitor	0.047 μF.	CH1/CH2 Voltmeter DC rejection ratio check.	TEKTRONIX 015-0221-00 Coupling Capacitor

[a] Requires a TM500-series power module.

INDEX TO PERFORMANCE CHECK PROCEDURE

DISPLAY

1. TRACE ROTATION 4-5
2. Geometry 4-5

VERTICAL

1. Input COUPLING Functional Check 4-6
2. CH 1 and CH 2 VOLTS/DIV Trace Shift 4-6
3. CH 3 and CH 4 VOLTS/DIV Trace Shift 4-7
4. CH 1 and CH 2 VAR VOLTS/DIV Trace Shift 4-7
5. CH 1 and CH 2 Input COUPLING Trace Shift 4-7
6. CH 2 INVERT Trace Shift 4-7
7. CH 1 and CH 2 VAR VOLTS/DIV Range 4-7
8. Low Frequency Linearity 4-8
9. CH 1 and CH 2 Vertical Deflection Accuracy 4-8
10. CH 3 and CH 4 Vertical Deflection Accuracy 4-8
11. ADD Mode and CH 2 INVERT Deflection Accuracy 4-9
12. Vertical POSITION Range (all channels) 4-9
13. CH 1 to CH 2 Signal Delay Match 4-10
14. CH 1 to CH 4 Signal Delay Match 4-10
15. CH 3 to CH 4 Signal Delay Match 4-10
16. CH 1 and CH 2 Vertical Bandwidth ... 4-10
17. CH 3 and CH 4 Vertical Bandwidth ... 4-11
18. CH 1 and CH 2 Aberrations 4-11
19. SCOPE BW (Bandwidth Limit) Accuracy 4-11
20. Common-mode Rejection Ratio 4-12
21. Channel Isolation 4-12
22. AC-Coupled Lower -3 dB Point 4-13
23. Vertical ALT and CHOP Modes 4-13
24. BEAM FIND Functional Check 4-13
25. A and B Trace Separation 4-13

TRIGGERING

1. 500 Hz Trigger Sensitivity 4-14
2. 500 kHz Trigger Sensitivity 4-15
3. 25 MHz Trigger Sensitivity 4-15
4. 100 MHz Trigger Sensitivity 4-15
5. 100 MHz NOISE REJ Trigger Sensitivity 4-16
6. Single Sweep Mode 4-16
7. Trigger LEVEL Control Range 4-16
8. TV Field Trigger Sensitivity 4-17
9. TV Line Trigger Sensitivity 4-17
10. Line Trigger Functional Check 4-17

HORIZONTAL

1. A and B Sweep Length 4-18
2. Horizontal POSITION Range 4-18
3. VAR SEC/DIV Range 4-18
4. Magnifier Registration 4-19
5. A and B Timing Accuracy and Linearity 4-19
6. A and B Magnified Timing Accuracy 4-19
7. Delay Time Jitter 4-20
8. Delay Time Accuracy 4-21
9. Delay Time Position Range 4-21
10. X-Axis Gain Accuracy 4-21
11. X-Y Phase Difference 4-22
12. X-Axis Bandwidth 4-22

TIME AND CURSORS MEASUREMENTS

1. |← SEC →| and |← 1/SEC →| Cursor Accuracy 4-23
2. Delta Time Accuracy 4-23
3. |← PHASE →| Cursor Accuracy 4-24
4. |← VOLTS →| Cursor Accuracy 4-24
5. ⫽ VOLTS →| Cursor Accuracy 4-24
6. Tracking Cursors Position Accuracy . 4-24

CH1/CH2 VOLTMETER MEASUREMENTS

1. DC Volts Accuracy 4-25
2. DC Volts Normal Mode Rejection Ratio 4-25
3. +Peak, – Peak, and Peak-to-Peak Volts Accuracy 4-26
4. 25 MHz +Peak, -Peak, and Peak-to-Peak Volts Accuracy 4-26
5. 100 MHz +Peak, -Peak, and Peak-to-Peak Volts Accuracy 4-26
6. Gated Volts Accuracy 4-26

EXTERNAL Z-AXIS AND PROBE ADJUST AND FRONT-PANEL SETUP FUNCTIONS

1. Check External Z-Axis Input 4-28
2. PROBE ADJUST Output 4-28
3. Run MAKE FACTORY SETTINGS Routine 4-28

DISPLAY

Equipment Required (See Table 4-1)

Time-mark generator
50 Ω BNC termination
50 Ω BNC coaxial cable

1. TRACE ROTATION

a. Set:

READOUT (Intensity)	For a viewable readout
A INTEN	For a viewable trace
Vertical MODE	CH 1
CH 1 VOLTS/DIV	0.1 V
CH 1 COUPLING	AC
A/B SELECT	A Trigger
Trigger MODE	AUTO LEVEL
Trigger SOURCE	VERT
Trigger CPLG	DC
Trigger SLOPE	⎍ (positive)
Trigger HOLDOFF	Min
Trigger LEVEL	12 o'clock
Horizontal MODE	A
Horizontal POSITION	12 o'clock
A SEC/DIV	2 μs
Measurements	All off (press CLEAR DISPLAY three times)
FOCUS	For best defined display
SCOPE BW	Off

b. Position trace vertically to the center graticule line.

c. CHECK—trace rotation control range is adequate to align trace with center graticule line using a small straight-bladed alignment tool.

d. ADJUST—trace parallel to center horizontal graticule line.

2. Geometry

a. Connect time-mark generator (TG 501) to CH 1 via a 50 Ω BNC coaxial cable and a 50 Ω BNC termination.

b. Set generator for 0.2 μs time marks.

c. Position the bottom of the CH 1 signal below the bottom graticule line.

d. CHECK—deviation of any vertical line within the center eight horizontal divisions does not exceed 0.1 division (half a minor division).

e. Set CH 1 COUPLING to GND.

f. Position trace slowly from the bottom graticule line to the top graticule line while making the following check.

g. CHECK—bowing or tilt of baseline trace doesn't exceed 0.1 division (half a minor division) within the eight vertical divisions.

h. Disconnect test signal from the 2246 1Y or 2246 Mod A.

VERTICAL

Equipment Required (See Table 4-1)

- Leveled sine-wave generator
- Calibration generator
- Function generator
- 50 Ω BNC coaxial cable
- 50 Ω precision BNC coaxial cable
- 50 Ω termination
- Adapter BNC-male-to-miniature probe tip
- Dual-input coupler

1. Input COUPLING Functional Check

a. Set:

READOUT (Intensity)	For a viewable readout
A INTEN	For a viewable trace
Vertical MODE	CH 1 and CH 2
CH 1 and CH 2 VOLTS/DIV	1 V
CH 1 and CH 2 Input COUPLING	DC
A/B SELECT	A Trigger
Trigger MODE	AUTO LEVEL
Trigger SOURCE	VERT
Trigger CPLG	DC
Trigger SLOPE	⎍ (positive)
Trigger LEVEL	12 o'clock
Trigger HOLDOFF	Min
Horizontal POSITION	12 o'clock
Horizontal MODE	A
SEC/DIV	0.5 ms
FOCUS	For best defined display
Measurements	All off (press CLEAR DISPLAY three times)
SCOPE BW	Off
CH 2 INVERT	Off

b. Set Vertical MODE to CH 1 (CH 2 off).

c. Connect calibration generator (PG 506) STD AMPL output to the CH 1 input via a 50 Ω BNC coaxial cable.

d. Set calibration generator to STD AMPL and AMPLITUDE to 5 V.

e. Position the bottom of the signal to the center horizontal graticule line.

f. Set CH 1 Input COUPLING to AC.

g. CHECK—display is roughly centered about the center horizontal graticule line.

h. Move the test signal to the CH 2 input.

i. Set Vertical MODE to CH 2 (CH 1 off).

j. Repeat the procedure for CH 2.

k. Disconnect the test signal from the 2246 1Y or 2246 Mod A.

2. CH 1 and CH 2 VOLTS/DIV Trace Shift

a. Set:

CH 1 and CH 2 Vertical MODE	On
CH 1 and CH 2 VOLTS/DIV	2 mV
CH 1 and CH 2 Input COUPLING	GND
SCOPE BW	On

b. Set Vertical MODE to CH 1 (CH 2 off).

c. Position trace to center horizontal graticule line.

d. Switch CH 1 VOLTS/DIV through all positions from 2 mV to 5 V.

e. CHECK—trace shift does not exceed 0.2 division between steps.

f. Set Vertical MODE to CH 2 (CH 1 off).

g. Position CH 2 trace to the center horizontal graticule line.

h. Switch CH 2 VOLTS/DIV through all positions from 2 mV to 5 V.

i. CHECK—trace shift does not exceed 0.2 division between steps.

3. CH 3 and CH 4 VOLTS/DIV Trace Shift

a. Set Vertical MODE to CH 3 (CH 2 off).

b. Position trace to the center horizontal graticule line.

c. Switch CH 3 VOLTS/DIV between 0.1 V and 0.5 V.

d. CHECK—trace shift does not exceed one division.

e. Set Vertical MODE to CH 4 (CH 3 off).

f. Position trace to the center horizontal graticule line.

g. Switch CH 4 VOLTS/DIV between 0.1 V and 0.5 V.

h. CHECK—trace shift does not exceed one division.

4. CH 1 and CH 2 VAR VOLTS/DIV Trace Shift

a. Set:

Vertical MODE	CH 1 (CH 4 off)
CH 1 VOLTS/DIV	2 mV

b. Position trace to center graticule line.

c. Set CH 1 VAR VOLTS/DIV fully CCW.

d. CHECK—trace shift does not exceed one division.

e. Set:

CH 1 VAR VOLTS/DIV	Detent (calibrated)
Vertical MODE	CH 2 (CH 1 off)
CH 2 VOLTS/DIV	2 mV

f. Position trace to center graticule line.

g. Set CH 2 VAR VOLTS/DIV fully CCW.

h. CHECK—trace shift does not exceed one division.

i. Set CH 2 VAR VOLTS/DIV to detent (calibrated) position.

5. CH 1 and CH 2 Input COUPLING Trace Shift

a. Position trace to center graticule line.

b. Set CH 2 Input COUPLING to DC.

c. CHECK—trace shift does not exceed 0.25 division.

d. Set:

Vertical MODE	CH 1 (CH 2 off)
CH 1 Input COUPLING	GND

e. Position trace to center graticule line.

f. Set CH 1 Input COUPLING to DC.

g. CHECK—trace shift does not exceed 0.25 division.

6. CH 2 INVERT Trace Shift

a. Set:

Vertical MODE to CH 2	(CH 1 off)
CH 2 Input Coupling	GND

b. Position trace to center horizontal graticule line.

c. Set CH 2 INVERT On.

d. CHECK—trace shift does not exceed one division.

e. Set:

CH 2 INVERT	Off
CH 2 COUPLING	DC

7. CH 1 and CH 2 VAR VOLTS/DIV Range

a. Set Vertical MODE to CH 1.

b. Position CH 1 trace to the center horizontal graticule line.

c. Connect calibration generator (PG 506) STD AMPL output to the CH 1 input via 50 Ω precision BNC coaxial cable. Set calibration generator to STD AMPL and AMPLITUDE to 50 mV.

d. Set:

CH 1 VOLTS/DIV	10 mV
CH 1 VAR VOLTS/DIV	Fully CCW

e. CHECK—the signal amplitude is two divisions or less.

f. Set:

CH 1 VAR VOLTS/DIV	Detent (calibrated)
Vertical MODE	CH 2 (CH 1 off)
CH 2 VOLTS/DIV	10 mV

g. Position CH 2 trace to the center horizontal graticule line.

h. Move the test signal to the CH 2 input.

i. Set CH 2 VAR VOLTS/DIV fully CCW.

j. Repeat the CHECK procedure for CH 2.

k. Set CH 2 VAR VOLTS/DIV to detent (calibrated) position.

8. Low-Frequency Linearity

a. Set:

Vertical MODE	CH 1 (CH 2 off)
CH 1 VOLTS/DIV	10 mV
SCOPE BW	On

b. Set calibration generator AMPLITUDE to 20 mV.

c. Move the test signal to the CH 1 input.

d. Position the top of the signal to top graticule line.

e. Check the signal amplitude is between 1.9 and 2.1 divisions.

f. Set bottom of the signal to bottom graticule line.

g. Check the signal amplitude is between 1.9 and 2.1 divisions.

h. Repeat the procedure for CH 2.

9. CH 1 and CH 2 Vertical Deflection Accuracy

a. Set CH 2 VOLTS/DIV to 2 mV.

b. Set calibration generator AMPLITUDE to 10 mV.

c. Position the trace two graticule lines below the center graticule line.

d. CHECK—all positions of the VOLTS/DIV settings for correct signal-to-graticule accuracy, using the settings in Table 4-2 for the checks.

e. Set calibration generator to Std Ampl output, 10 mV.

f. Move the test signal to the CH 1 input.

g. Set:

Vertical MODE	CH 1 (CH 2 off)
CH 1 VOLTS/DIV	2 mV

h. Position the trace two graticule lines below the center graticule line.

i. Repeat CHECK procedure for CH 1.

Table 4-2
Signal-to-Graticule Accuracy

VOLTS/DIV Setting	Calibration Generator AMPLITUDE Setting	Deflection Accuracy (in divisions)
2 mV	10 mV	4.90 to 5.10
5 mV	20 mV	3.92 to 4.08
10 mV	50 mV	4.90 to 5.10
20 mV	100 mV	4.90 to 5.10
50 mV	200 mV	3.92 to 4.08
0.1 V	500 mV	4.90 to 5.10
0.2 V	1 V	4.90 to 5.10
0.5 V	2 V	3.92 to 4.08
1 V	5 V	4.90 to 5.10
2 V	10 V	4.90 to 5.10
5 V	20 V	3.92 to 4.08

10. CH 3 and CH 4 Vertical Deflection Accuracy

a. Set:

Vertical MODE	CH 3 (CH 1 off)
CH 3 & CH 4 VOLTS/DIV	0.1 V

b. Position the trace two graticule lines below the center horizontal graticule line.

c. Move CH 1 test setup to the CH 3 input.

d. Set calibration generator AMPLITUDE to 0.5 V.

e. CHECK—the signal amplitude is between 4.90 and 5.10 divisions.

f. Move the test signal to the CH 4 input.

g. Set Vertical MODE to CH 4 (CH 3 off).

h. Position the trace two graticule lines below the center horizontal graticule line.

i. Repeat CHECK for CH 4.

j. Set CH 3 and CH 4 VOLTS/DIV to 0.5 V.

k. Set calibration generator AMPLITUDE to 2 V.

l. CHECK—the signal amplitude is between 3.92 and 4.08 divisions.

m. Set Vertical MODE to CH 3 (CH 4 off).

n. Move the test signal to the CH 3 input.

o. Repeat CHECK procedure for CH 3.

p. Disconnect the test setup from the 2246 1Y or 2246 Mod A.

11. ADD Mode and CH 2 INVERT Deflection Accuracy

a. Set:

Vertical MODE	ADD (all others off)
CH 1 and CH 2 VOLTS/DIV	0.1 V
CH 1 and CH 2 Input COUPLING	DC

b. Connect calibration generator STD AMPL output to the CH 1 and CH 2 inputs via 50 Ω precision BNC coaxial cable and a BNC dual-input coupler.

c. Set the calibration generator AMPLITUDE to 0.2 V.

d. Position the ADD signal to the center of the crt graticule with the CH 1 and CH 2 POSITION controls.

e. CHECK—that the ADD signal amplitude is between 3.92 and 4.08 divisions.

f. Set CH 2 INVERT On.

h. CHECK—the ADD signal amplitude is 0.08 division (less than half a minor graticule division) or less excluding trace width (sweep will free run).

g. Disconnect the test setup from the 2246 1Y or 2246 Mod A.

12. Vertical POSITION Range (all channels)

a. Set:

A SEC/DIV	0.1 ms
CH 1 Vertical MODE	On (ADD off)
CH 1 VOLTS/DIV	1 V
CH 2 INVERT	Off
SCOPE BW	Off
CH 1 and CH 2 Input COUPLING	AC

b. Connect leveled sine-wave generator (SG 503) output to the CH 1 and CH 2 inputs via a 50 Ω BNC coaxial cable, a 50 Ω BNC termination, and a BNC dual-input coupler.

c. Position trace to center horizontal graticule line.

d. Set leveled sine-wave generator output for two-division signal at 50 kHz.

e. Set:

CH 1 VOLTS/DIV	0.1 V
CH 1 POSITION	Fully CW

f. CHECK—that the bottom of the waveform is above the center horizontal graticule line.

g. Set CH 1 POSITION fully CCW.

h. CHECK—that the top of the waveform is below the center horizontal graticule line.

i. Set:

CH 1 POSITION	12 o'clock
Vertical MODE	CH 2 (CH 1 off)
CH 2 POSITION	Fully CW

j. CHECK—that the bottom of the waveform is above the center horizontal graticule line.

k. Set CH 2 POSITION fully CCW.

l. CHECK—that the top of the waveform is below the center horizontal graticule line.

m. Set CH 2 POSITION to 12 o'clock.

n. Move the BNC dual-input coupler from the CH 1 and CH 2 inputs to the CH 3 and CH 4 inputs.

o. Set:

Vertical MODE	CH 3 (CH 2 off)
CH 3 and CH 4 VOLTS/DIV	0.1 V
CH 3 POSITION	Fully CW

p. CHECK—that the bottom of the waveform is above the center graticule line.

q. Set CH 3 POSITION fully CCW.

r. CHECK—that the top of the waveform is below the center graticule line.

s. Set:

CH 3 POSITION	12 o'clock
Vertical MODE	CH 4 (CH 3 off)

t. Repeat the procedure for CH 4.

u. Set CH 4 POSITION to 12 o'clock.

v. Disconnect the test setup from the 2246 1Y or 2246 Mod A.

13. CH 1 to CH 2 Signal Delay Match

a. Set:

Vertical MODE	CH 1 and CH 2 (CH 4 off)
CH 1 and CH 2 Input COUPLING	DC
CH 1 and CH 2 VOLTS/DIV	0.1 V
SEC/DIV	20 ns
Trigger SOURCE	CH 3

b. Superimpose the CH 1 and CH 2 traces at the 100% graticule marking.

c. Connect calibration generator (PG 506) FAST RISE, rising-edge signal to the CH 1 and CH 2 inputs via a 50 Ω precision BNC coaxial cable, a 50 Ω BNC termination, and a BNC dual-input coupler.

d. Connect calibration generator TRIG OUT signal to the CH 3 input via a 50 Ω BNC coaxial cable and a 50 Ω BNC termination.

e. Set the calibration generator to FAST RISE and adjust PULSE AMPLITUDE for five divisions of signal amplitude at 1 MHz.

f. Position the rising edges of the superimposed waveforms horizontally to the center vertical graticule line.

g. Set X10 MAG On (for 2 ns/div sweep speed).

h. CHECK—that the leading edges of the two waveforms have less than 0.2 horizontal division separation at the center graticule line, excluding trace width.

14. CH 1 to CH 4 Signal Delay Match

a. Set Vertical MODE to CH 1 and CH 4 (CH 2 off).

b. Move the CH 2 signal to the CH 4 input connector.

c. Superimpose the CH 4 waveform on the CH 1 waveform.

d. CHECK—that the leading edges of the two waveforms have less than 0.4 horizontal division separation at the center graticule line, excluding trace width.

15. CH 3 to CH 4 Signal Delay Match

a. Set:

Vertical MODE	CH 3 and CH 4 (CH 1 off)
Trigger SOURCE	CH 2

b. Move the CH 3 trigger signal to the CH 2 input and the CH 1 signal to the CH 3 input.

c. Superimpose CH 3 and CH 4 waveforms at the center graticule line, using the HORIZONTAL POSITION control, if necessary.

d. CHECK—that the leading edges of the two waveforms have less than 0.2 horizontal division separation at the center graticule line.

e. Disconnect the test setup.

16. CH 1 and CH 2 Vertical Bandwidth

a. Set:

X10 MAG	Off
Vertical MODE	CH 1 (CH 3 and CH 4 off)
SEC/DIV	0.1 ms
CH 1 VOLTS/DIV	5 mV
CH 1 and CH 2 Input COUPLING	DC
Trigger SOURCE	VERT
Horizontal POSITION	12 o'clock

b. Connect leveled sine-wave generator (SG 503) output to the CH 1 input via a 50 Ω precision BNC coaxial cable and a 50 Ω BNC termination.

c. Set the Leveled Sine-Wave Generator output for a six-division signal amplitude at 50 kHz.

d. Set the generator Frequency Range and Frequency Variable controls for a 100 MHz output signal.

e. CHECK—the displayed signal amplitude is 4.2 divisions or more.

f. Repeat the frequency setup and CHECK procedure for VOLTS/DIV settings of 50 mV and 0.5 V.

g. Move the test signal to the CH 2 input.

h. Set:

Vertical MODE	CH 2 (CH 1 off)
CH 2 VOLTS/DIV	5 mV

i. Repeat the complete Bandwidth check procedure for Channel 2.

17. CH 3 and CH 4 Vertical Bandwidth

a. Set:

Vertical MODE	CH 3 (CH 2 off)
CH 3 and CH 4 VOLTS/DIV	0.1 V

b. Connect leveled sine-wave generator (SG 503) output to the CH 3 input via a 50-Ω precision BNC coaxial cable and a 50-Ω BNC termination.

c. Set the generator output for a six-division signal display at 50 kHz.

d. Set the generator Frequency Range and Frequency Variable controls for a 100 MHz output frequency.

e. CHECK—that the signal display amplitude is 4.2 divisions or more.

f. Repeat the procedure for 0.5 VOLTS/DIV setting.

g. Move the test signal to the CH 4 input.

h. Set Vertical MODE to CH 4 (CH 3 off).

i. Repeat the procedure for CH 4.

j. Disconnect the test setup.

18. CH 1 and CH 2 Aberrations

a. Set:

VERT MODE	CH 1 (CH 4 off)
CH 1 VOLTS/DIV	5 mV
CH 1 COUPLING	DC
A SEC/DIV	20ns

b. Connect calibration generator (PG 506) FAST RISE ⌐‾ output to the CH 1 input via a 10X, 50-Ω attenuator, a 50-Ω precision BNC coaxial cable, and a 50-Ω BNC termination.

c. Position top of waveform to 100% graticule marking.

d. Adjust calibration generator PULSE AMPLITUDE for five divisions of signal display.

e. CHECK—that aberrations are ≤0.25 division, peak-to-peak.

f. Repeat steps c. through e. for VOLTS/DIV settings of 10 mV through 0.2 V. Remove the 10X, 50-Ω attenuator when necessary to maintain a five-division display.

g. Repeat the procedure for CH 2.

h. Disconnect the test setup.

19. SCOPE BW (Bandwidth Limit) Accuracy

a. Set:

Vertical MODE	CH 1 (CH 2 off)
CH 1 VOLTS/DIV	10 mV
SCOPE BW	On
A SEC/DIV	0.1 ms

b. Connect leveled sine-wave generator (SG 503) output to the CH 1 input via a 50-Ω precision BNC coaxial cable and a 50-Ω BNC termination.

c. Set leveled sine-wave generator (SG 503) output for a six-division signal amplitude at 50 kHz.

d. Set the leveled sine-wave generator Frequency Range and Frequency Variable controls to produce a signal display amplitude of 4.2 divisions.

e. CHECK—that the sine-wave generator output frequency is between 17 MHz and 23 MHz.

f. Disconnect the test setup.

20. Common-mode Rejection Ratio

a. Connect leveled sine-wave generator (SG 503) output to the CH 1 and CH 2 input connectors via a 50-Ω precision BNC coaxial cable, a 50-Ω BNC termination, and a BNC dual-input coupler.

b. Set the leveled sine-wave generator output for an eight-division signal-display amplitude at 50 kHz.

c. Set:

ADD MODE	On
CH 2 VOLTS/DIV	10 mV
CH 2 INVERT	On
CH 1 Vertical MODE	Off
SCOPE BW	Off

d. Adjust CH 1 or CH 2 VAR VOLTS/DIV for smallest signal amplitude (as needed).

e. Set the leveled sine-wave output frequency to 10 MHz.

f. Set:

CH 1 Vertical MODE	On
ADD MODE	Off

g. Set the leveled sine-wave output amplitude for an eight-division display.

h. Set the Vertical MODE to ADD (CH 1 off).

i. CHECK—the signal is less than 0.3 division in amplitude.

j. Set the leveled sine-wave generator frequency to 100 MHz.

k. Set VERTICAL MODE to CH 1 (ADD off).

l. Set the leveled sine-wave output amplitude for an eight-division display.

m. Set the VERTICAL MODE to ADD (CH 1 off).

n. CHECK—the signal is less than 0.8 division in amplitude.

o. Disconnect the test setup.

p. Set both CH 1 and CH 2 VAR controls to their calibrated (fully clockwise in detent) positions.

q. Disconnect the test setup.

21. Channel Isolation

a. Set:

Vertical MODE	CH 1 and CH 2 (ADD off)
CH 2 INVERT	Off
CH 1, CH 2, CH 3, and CH 4 VOLTS/DIV	0.1 V
Trigger SOURCE	CH 1

b. Connect the leveled sine-wave generator (SG 503) output to the CH 1 input via a 50-Ω precision BNC coaxial cable and a 50-Ω BNC termination.

c. Set the leveled sine-wave generator (SG 503) output for a five-division signal display amplitude at 100 MHz.

d. Set CH 2, CH 3, and CH 4 Vertical MODE On (CH 1 off).

e. CHECK—display amplitude is 0.1 division or less, excluding trace width, on the CH 2, CH 3, and CH 4 traces.

f. Move sine-wave generator signal to the CH 2 input.

g. Set:

CH 1, CH 3, and CH 4 Vertical MODE	On (CH 2 off)
Trigger SOURCE	CH 2

h. CHECK—display amplitude is 0.1 division or less, excluding trace width, on the CH 1, CH 3, and CH 4 traces.

i. Move sine-wave generator signal to the CH 3 input.

j. Set:

CH 1, CH 2, and CH 4 Vertical MODE	On (CH 3 off)
Trigger SOURCE	CH 3

k. CHECK—display amplitude is 0.1 division or less, excluding trace width, on the CH 1, CH 2, and CH 4 traces.

l. Move sine-wave generator signal to the CH 4 input.

m. Set:

CH 1, CH 2, and CH 3 Vertical MODE	On (CH 4 off)
Trigger SOURCE	CH 4

n. CHECK—display amplitude is 0.1 division or less, excluding trace width, on the CH 1, CH 2, and CH 3 traces.

o. Disconnect the test setup.

22. AC-Coupled Lower -3 dB Point

a. Set:

A SEC/DIV	50 ms
Vertical MODE	CH 1 (all others off)
Trigger SOURCE	VERT
Trigger MODE	NORM

b. Connect function generator (FG 502) output to the CH 1 input via a 50-Ω BNC coaxial cable and a 50-Ω BNC termination.

c. Set the function generator output controls to produce a six-division sine-wave display at 10 Hz (with no dc offset).

NOTE

It may be necessary to adjust the TRIGGER LEVEL control to obtain a triggered display

d. Set CH 1 Input COUPLING to AC.

e. CHECK—display amplitude is 4.2 division or more.

f. Set Vertical MODE to CH 2 (CH 1 off).

g. Repeat the procedure for CH 2.

h. Disconnect the test equipment from the 2246 1Y or 2246 Mod A.

23. Vertical ALT and CHOP Modes

a. Set:

Vertical MODE	CH 1, CH 2, CH 3, CH 4, ALT (CHOP off)
CH 1 and CH 2 VOLTS/DIV	10 mV
CH 3 and CH 4 VOLTS/DIV	0.1 V
CH 1 and CH 2 Input COUPLING	DC
Horizontal MODE	A
SEC/DIV	1 ms
Trigger MODE	AUTO LEVEL

b. Position all traces for two divisions of separation with the CH 1 trace near the top; then in order down the graticule area with the CH 4 trace near the bottom.

c. Set SEC/DIV to 10 ms.

d. CHECK—that four traces are sweeping across the screen alternately.

e. Set CHOP Vertical MODE On.

f. CHECK—that four traces are sweeping across the screen simultaneously.

24. BEAM FIND Functional Check

a. Push BEAM FIND in and hold.

b. CHECK—the signal is visible and compressed fully within the graticule area as the horizontal and vertical position controls are rotated through their ranges.

c. Release the BEAM FIND button.

d. Set all Vertical and Horizontal POSITION controls at the 12 o'clock position.

25. A and B Trace Separation

a. Set:

A SEC/DIV	1 ms
Vertical MODE	CH 1 (others off)
Horizontal MODE	ALT
B SEC/DIV	0.5 ms
A/B SELECT	B
B Trigger MODE	RUNS AFTER
TRACE SEP	Fully CW

b. Position the CH 1 trace below the center horizontal graticule line to display the separated B trace.

c. CHECK—for at least four divisions of upward trace separation between the B trace and the A trace.

d. Set TRACE SEP fully CCW.

e. Position the CH 1 trace above the center horizontal graticule line to display the separated B trace.

f. CHECK—for at least four divisions downward trace separation of the B trace from the A trace.

TRIGGERING

Equipment Required (See Table 4-1)

Leveled sine-wave generator	Function generator
50 Ω BNC coaxial cable	10X BNC attenuator
2X BNC attenuator	50 Ω BNC termination
Dual-input coupler	TV signal generator

1. 500 Hz Trigger Sensitivity

a. Set:

READOUT (Intensity)	For a viewable readout
A INTEN	For a viewable trace
Vertical MODE	CH 1
CH 1 and CH 2 Input COUPLING	DC
CH 1 VOLTS/DIV	0.1 V
SCOPE BW	On
Horizontal MODE	A
A SEC/DIV	2 ms
A/B SELECT	A Trigger
Trigger MODE	AUTO LEVEL
Trigger SOURCE	VERT
Trigger CPLG	AC
Trigger SLOPE	⎍ (positive)
Trigger HOLDOFF	Min
FOCUS	For best defined display
Measurements	All off (press CLEAR DISPLAY three times)
Horizontal POSITION	12 o'clock

b. Connect function generator (FG 502) output to the CH 1 input via a 50-Ω BNC coaxial cable, and a 50-Ω BNC termination.

c. Set function generator (FG 502) output to produce a 7.0 division sine-wave display at 500 Hz.

d. Add a 10X and a 2X BNC attenuator before the 50-Ω BNC termination (for a 0.35 division display).

NOTE

The Trigger LEVEL control may be used to obtain a stable display.

e. CHECK—that the display is stably triggered with DC, HF REJ, and AC Trigger CPLG; and that the display will not trigger on NOISE REJ or LF REJ Trigger CPLG.

f. Set:

Trigger CPLG	DC
A/B SELECT	B Trigger
Trigger MODE	NORM
Trigger SOURCE	VERT
Trigger SLOPE	⎍ (positive)
Horizontal MODE	B
B SEC/DIV	0.5 ms
DELAY Time	?0.000 (minimum delay time)
B INTEN	For viewable display

NOTE

It may be necessary to adjust the Trigger LEVEL control to obtain a display.

g. CHECK—that using the Trigger LEVEL control the display can be stably triggered in DC, HF REJ, and AC Trigger CPLG; and that the display cannot be triggered in NOISE REJ or LF REJ Trigger CPLG.

h. Disconnect the test setup from the CH 1 input.

2. 500 kHz Trigger Sensitivity

a. Set:

SCOPE BW	Off
Horizontal MODE	A
A/B SELECT	A Trigger
A SEC/DIV	2 μs

b. Connect leveled sine-wave generator (SG 503) output to the CH 1 input via a 50-Ω BNC coaxial cable and a 50-Ω BNC termination.

c. Set leveled sine-wave generator output to produce a 7.0 division sine-wave display amplitude at 500 kHz.

d. Add a 10X and a 2X BNC attenuator before the 50-Ω BNC termination (for a 0.35 division display amplitude).

e. CHECK—that the display cannot be triggered in either HF REJ of NOISE REJ CPLG.

f. Set:

Horizontal MODE	B
A/B SELECT	B Trigger
B SEC/DIV	1 μs

g. CHECK—that the display cannot be triggered in HF REJ or NOISE REJ CPLG by adjusting the Trigger LEVEL control.

3. 25 MHz Trigger Sensitivity

a. Set:

Horizontal MODE	A
A/B SELECT	A Trigger
Trigger CPLG	DC
A SEC/DIV	50 ns

b. Remove the 10X and 2X BNC attenuators from the signal path.

c. Set leveled sine-wave generator output to produce a 7.0 division display amplitude at 25 MHz.

d. Add a 10X and a 2X BNC attenuator before the 50-Ω BNC termination.

e. CHECK—that the display is stably triggered in DC, LF REJ, and AC Trigger CPLG; the display is not triggered in NOISE REJ and HF REJ Trigger CPLG settings.

f. Set:

Trigger CPLG	AC
Horizontal MODE	B
A/B SELECT	B Trigger
B SEC/DIV	20 ns

g. CHECK—that using the Trigger LEVEL control the display can be stably triggered in DC, LF REJ, and AC Trigger CPLG; the display cannot be triggered in NOISE REJ and HF REJ Trigger CPLG settings.

h. Set leveled sine-wave generator (SG 503) to produce a 1.4 division display at 25 MHz.

i. CHECK—that the display can be stably triggered with NOISE REJ Trigger CPLG but does not trigger with HF REJ CPLG.

j. Set:

Horizontal MODE	A
A/B SELECT	A Trigger

k. CHECK—that the display is stably triggered with NOISE REJ Trigger CPLG but does not trigger with HF REJ CPLG. (The Trigger LEVEL control may be adjusted to improve display stability in NOISE REJ CPLG.)

4. 100 MHz Trigger Sensitivity

a. Set Trigger CPLG to DC.

b. Set leveled sine-wave generator to produce a 1.0 division display at 100 MHz.

c. CHECK—that the display is stably triggered in DC, LF REJ, and AC Trigger CPLG; the display is not triggered in HF REJ Trigger CPLG.

d. Set:

Horizontal MODE	B
A/B SELECT	B Trigger

e. CHECK—that using the Trigger LEVEL control the display can be stably triggered in DC, LF REJ, and AC Trigger CPLG; the display cannot be triggered in HF REJ Trigger CPLG.

f. Set:

Horizontal MODE	A
Vertical MODE	CH 2 (CH 1 off)
CH 2, CH 3, and CH 4 VOLTS/DIV	0.1 V
A/B SELECT	A Trigger
Trigger CPLG	DC

g. Move test signal from CH 1 to the CH 2 input.

h. Set leveled sine-wave generator output to produce a 1.0 division display amplitude at 100 MHz.

i. CHECK—that a stable display can be obtained. (The Trigger LEVEL control may be adjusted to improve the display stability.)

j. Repeat procedure for the CH 3 and CH 4 (turn on the appropriate Vertical MODE and move the test signal as required).

5. 100 MHz NOISE REJ Trigger Sensitivity

a. Move test signal to the CH 1 input.

b. Set Vertical MODE to CH 1 (others off).

c. Remove the 2X BNC attenuator from the test signal path.

d. Set Leveled Sine-Wave Generator output for a 2.2 division display amplitude at 100 MHz.

e. CHECK—that the display is stably triggered with NOISE REJ Trigger CPLG.

6. Single Sweep Mode

a. Set:

Horizontal MODE	A
A SEC/DIV	10 μs
A/B SELECT	A Trigger

b. Remove the 10X and 2X BNC attenuators from the test signal path.

c. Set leveled sine-wave generator output to produce a 7.0 division display amplitude at 50 kHz.

d. Add a 10X and a 2X BNC attenuator before the 50-Ω BNC termination. (Display should stably trigger with AUTO LEVEL finding the correct trigger level setting.)

e. Set:

A Trigger MODE	NORM
CH 1 Input COUPLING	GND
Trigger MODE	SGL SEQ

f. CHECK—that the Trigger READY LED turns on and remains on.

g. Set:

A INTEN	3/4 fully CW
CH 1 Input COUPLING	DC (see CHECK below)

h. CHECK—that the TRIG'D LED flashes, and the READY LED turns off after a single sweep and readout display occurs when the Input COUPLING switches to DC.

7. Trigger LEVEL Control Range

a. Set:

Trigger MODE	AUTO (not AUTO LEVEL)
Trigger LEVEL	Fully CCW
A INTEN	For a good viewing intensity

b. Remove 10X and 2X BNC attenuators from the test signal path.

c. Increase leveled sine-wave generator output level until a stably triggered display is just obtainable.

d. Set Trigger LEVEL fully CW.

e. Set leveled sine-wave generator output for a stable display (if necessary).

f. Set CH 1 VOLTS/DIV to 1 V.

g. CHECK—that the CH 1 signal display amplitude is four divisions or more (peak-to-peak). Note that the signal is not triggered.

h. Disconnect the test setup from the 2246 1Y or 2246 Mod A.

8. TV Field Trigger Sensitivity

a. Set:

Vertical MODE	CH 2 (CH 1 off)
CH 2 VOLTS/DIV	2 V
SEC/DIV	0.2 ms
Trigger SLOPE	⌝ (negative)
Trigger MODE	TV FIELD
Trigger LEVEL	12 o'clock

b. Connect TV signal generator negative-going sync pulse output to the CH 1 input via a 50-Ω BNC cable.

c. Set CH 2 VAR VOLTS/DIV control for a 0.5 division composite sync signal.

d. CHECK—that a stable display is obtained.

e. Set:

CH 2 INVERT	On
Trigger SLOPE	⌐ (positive)

f. CHECK—that a stable display is obtained.

9. TV Line Trigger Sensitivity

a. Set:

SEC/DIV	20 μs
Trigger MODE	TV LINE
Trigger HOLDOFF	For a single triggered display

b. CHECK—that a stable display is obtained.

c. Set:

CH 2 INVERT	Off
Trigger SLOPE	⌝ (negative)

d. CHECK—that a stable display is obtained.

e. Set CH 2 VAR VOLTS/DIV to Detent Position (calibrated).

f. Disconnect the TV signal generator from the 2246 1Y or 2246 Mod A.

10. Line Trigger Functional Check

a. Set:

CH 2 VOLTS/DIV	0.1 V (without a 10X probe attached)
CH 2 Input COUPLING	DC
A SEC/DIV	5 ms
Trigger MODE	AUTO LEVEL
Trigger SOURCE	LINE
Trigger CPLG	DC

b. Connect a 10X probe to the CH 2 input connector.

c. Attach the probe tip to a length of wire at least 4 in. long. Hold the wire near the instrument power cord.

d. CHECK—that the display can be triggered in both ⌐ (positive) and ⌝ (negative) slopes.

e. Disconnect the test setup.

HORIZONTAL

Equipment Required (See Table 4-1)

Time-mark generator	50 Ω BNC coaxial cable
50 Ω BNC termination	

1. A and B Sweep Length

a. Set:

READOUT (Intensity)	For a viewable readout
A INTEN	For a viewable trace
Vertical MODE	CH 1 (CH 2 off)
CH 1 and CH 2 Input COUPLING	DC
CH 1 VOLTS/DIV	0.5 V
Horizontal MODE	A
A SEC/DIV	2 ms
Horizontal POSITION	12 o'clock
A/B SELECT	A Trigger
Trigger MODE	AUTO LEVEL
Trigger SOURCE	VERT
Trigger CPLG	AC
Trigger SLOPE	⎍ (positive)
Trigger HOLDOFF	Min
Trigger LEVEL	12 o'clock
Measurements	All off (press CLEAR DISPLAY three times)
FOCUS	For best defined display

b. Connect time-mark generator (TG 501) to the CH 1 input via a 50-Ω BNC coaxial cable and a 50-Ω BNC termination.

c. Set generator for 2 ms time marks.

d. CHECK—sweep length of the A trace is greater than 10 divisions.

e. Set:

Horizontal MODE	B
B SEC/DIV	1 ms
A/B SELECT	B Trigger
Trigger MODE	RUNS AFTER
|← OR DELAY Control	CCW to the lowest DELAY readout value
B INTEN	For a visible display

f. CHECK—the Delay Time readout is ?0.000 ms, and the B Sweep length is greater than 10 divisions.

2. Horizontal POSITION Range

a. Set:

Horizontal MODE	A
Horizontal POSITION	Fully CW

b. CHECK—that the start of trace positions past the center vertical graticule line.

c. Set Horizontal POSITION fully CCW.

d. CHECK—that the 11th time marker is positioned to the left of the center vertical graticule line.

3. VAR SEC/DIV Range

a. Set:

SEC/DIV	1 ms
SEC/DIV VAR	Fully CCW
Horizontal POSITION	12 o'clock

b. Set time mark generator for 5 ms time marks.

c. CHECK—the time-mark spacing is equal to or less than two divisions.

d. Set SEC/DIV VAR fully CW (calibrated detent).

4. Magnifier Registration

a. Set X10 MAG on.

b. Position the rising edge of a time marker to the center vertical graticule line.

c. Set X10 MAG off.

d. CHECK—for less than 0.5 division horizontal trace shift.

5. A and B Timing Accuracy and Linearity

a. Set A SEC/DIV to 20 ns.

b. Set time-mark generator for 20 ns time marks.

c. Position the time marker peaks vertically to the center horizontal graticule line (allows use of the minor division graticule markings as an aid in making the accuracy checks).

d. Position the second time marker to the second vertical graticule line.

e. CHECK—that the tenth marker is within ± 0.16 division of the tenth graticule line.

f. CHECK—that in any group of three time markers, having the first and third markers aligned with their respective graticule lines, the second marker is within ± 0.05 division of its graticule line.

g. Repeat the procedure for all other SEC/DIV settings. Use Table 4-3, Settings for Timing Accuracy Checks, for the SEC/DIV and time-mark generator settings.

h. Set SEC/DIV to 20 ns.

i. Set time-mark generator for 20 ns time marks.

j. Set:

Horizontal MODE	B
B INTEN	For a viewable display

k. Repeat the CHECK procedure for all the B SEC/DIV settings.

6. A and B Magnified Timing Accuracy

a. Set time-mark generator for 5 ns time marks.

b. Set:

Horizontal MODE	A
A SEC/DIV	20 ns
Horizontal MODE	B
Horizontal POSITION	12 o'clock
X10 MAG	On (for 2 ns/div sweep speed)
CH 1 VOLTS/DIV	0.5 V (use 0.2 V for the 5 ns time markers if necessary)

c. Align the rising edge a time marker with the second vertical graticule line (center the display vertically).

d. CHECK—that the rising edge of the fourth displayed time marker to the right of the one positioned in step c. crosses the center horizontal graticule line at between 8.27 divisions to 8.73 divisions.

e. Set SEC/DIV to 5 ns.

f. Align a time marker to the second vertical graticule line.

g. CHECK—that the tenth displayed time marker is within 0.24 division (left or right) of the tenth graticule line.

h. Repeat the timing checks for all SEC/DIV settings between 10 ns and 0.5 s. Use the SEC/DIV and Time Mark Generator X10 MAG settings given in Table 4-3.

Table 4-3

Settings for Timing Accuracy Checks

SEC/DIV Setting		Time-Mark Setting	
Normal	X10 MAG	Normal	X10 MAG
20 ns	2 ns	20 ns	5 ns
50 ns	5 ns	50 ns	5 ns
0.1 µs	10 ns	0.1 ns	10 ns
0.2 µs	20 ns	0.2 µs	20 ns
0.5 µs	50 ns	0.5 µs	50 ns
1 µs	0.1 µs	1 µs	0.1 µs
2 µs	0.2 µs	2 µs	0.2 µs
5 µs	0.5 µs	5 µs	0.5 µs
10 µs	1 µs	10 µs	1 µs
20 µs	2 µs	20 µs	2 µs
50 µs	5 µs	50 µs	5 µs
0.1 ms	10 µs	0.1 ms	10 µs
0.2 ms	20 µs	0.2 ms	20 µs
0.5 ms	50 µs	0.5 ms	50 µs
1 ms	0.1 ms	1 ms	0.1 ms
2 ms	0.2 ms	2 ms	0.2 ms
5 ms	0.5 ms	5 ms	0.5 ms
A Sweep only			
10 ms	1 ms	10 ms	1 ms
20 ms	2 ms	20 ms	2 ms
50 ms	5 ms	50 ms	5 ms
0.1 s	10 ms	0.1 s	10 ms
0.2 s	20 ms	0.2 s	20 ms
0.5 s	50 ms	0.5 s	50 ms

i. Set:

Horizontal MODE	A
SEC/DIV	2 ns (with X10 MAG on)

j. Set time-mark generator for 5 ns time marks.

k. Repeat the magnified accuracy and linearity for the A Sweep at all SEC/DIV settings.

7. Delay Time Jitter

a. Set:

X10 MAG	Off
A SEC/DIV	1 ms
Horizontal MODE	ALT
SEC/DIV	0.5 µs

b. Set time-mark generator for 1 ms time marks.

c. Position the intensified dot to the leading edge of the 10th time marker to display the rising edge on the B Trace (using the |← OR DELAY control).

d. Set:

Horizontal MODE	B
B INTEN	Fully CW (maximum intensity)

e. CHECK—that the jitter on the leading edge does not exceed one division over a two-second interval. Disregard slow drift.

8. Delay Time Accuracy

a. Set:

Horizontal MODE	ALT
B SEC/DIV	10 μs
TRACE SEP	Fully CCW (maximum downward position)
CH 1 POSITION	To display both the ALT and the B Delayed Traces

b. Position the first time marker on the ALT trace to first vertical graticule line (left-most edge).

c. Position the intensified zone to full left position (counterclockwise rotation of the |← OR DELAY control).

d. CHECK—that the readout is ?0.000 ms.

e. Position the intensified zone to the second time marker and align the leading edge of the time marker displayed on the B Trace to the left-most (first) graticule line. Using the Readout Accuracy Limits given in Table 4-4, check the delay time accuracy.

f. Repeat the procedure for the third through 10th time markers.

Table 4-4
Delay Time Accuracy

Time Marker	Readout Accuracy Limits
1st	? 0.000 ms
2nd	0.975 ms to 1.025 ms
3rd	1.970 ms to 2.030 ms
4th	2.965 ms to 3.035 ms
5th	3.960 ms to 4.040 ms
6th	4.955 ms to 5.045 ms
7th	5.950 ms to 6.050 ms
8th	6.945 ms to 7.055 ms
9th	7.940 ms to 8.060 ms
10th	8.935 ms to 9.065 ms

9. Delay Time Position Range

a. Set time-mark generator for 0.1 ms.

b. Set:

A SEC/DIV	1 ms
B SEC/DIV	5 μs
|← OR DELAY control	CCW to ?0.000

c. CHECK—that the intensified zone is positioned at or before the second time mark.

d. Turn the |← OR DELAY control clockwise until the delay readout stops increasing (largest number).

e. CHECK—that the intensified dot is positioned at or after the 99th time marker (located at a Delay Time of 9.9 ms).

f. Disconnect the time-mark generator from the 2246 1Y or 2246 Mod A.

10. X-Axis Gain Accuracy

a. Set:

Horizontal MODE	X-Y
Vertical MODE	CH 2 (CH 1 off)
CH 1 and CH 2 VOLTS/DIV	10 mV
CH 1 Input COUPLING	DC
CH 2 Input COUPLING	GND

b. Connect calibration generator STD AMPL output to the CH 1 input via a 50-Ω precision BNC coaxial cable.

c. Set calibration generator AMPLITUDE to 50 mV.

d. CHECK—X-Axis amplitude is between 4.85 and 5.15 horizontal divisions.

e. Disconnect calibration generator.

11. X-Y Phase Difference

a. Set:

Horizontal MODE	A
Vertical MODE	CH 1 (CH 2 off)
CH 1 Input COUPLING	DC

b. Connect function generator (FG 502) output to the CH 1 input via a 50-Ω BNC coaxial cable and a 50-Ω BNC termination.

c. Set function generator output for six divisions of signal display amplitude at 100 kHz.

d. Set:

Horizontal MODE	X-Y
CH 1 Input COUPLING	GND

e. Position dot to graticule center.

f. Set CH 1 Input COUPLING to DC.

g. CHECK—ellipse opening at the center is 0.3 division or less, measured horizontally.

h. Disconnect function generator.

12. X-Axis Bandwidth

a. Connect the leveled sine-wave generator (SG 503) output to the CH 1 input via a 50-Ω precision BNC coaxial cable and a 50-Ω BNC termination.

b. Set:

CH 1 VOLTS/DIV	10 mV
Vertical MODE	CH 2 (CH 1 off).

c. Set leveled sine-wave generator for six divisions of 50-kHz signal.

d. Set leveled sine-wave output to 3 MHz.

e. CHECK—X-Axis display is 4.2 horizontal divisions or more.

f. Disconnect the test equipment from the 2246 1Y or 2246 Mod A.

TIME AND CURSORS MEASUREMENTS

Equipment Required (See Table 4-1)

Time mark generator	Calibration generator
50Ω BNC coaxial cable	50Ω BNC termination

1. ⇤ SEC ⇥ and ⇤ 1/SEC ⇥ Cursor Accuracy

a. Set:

READOUT (Intensity)	For a viewable readout
A INTEN	For a viewable trace
Vertical MODE	CH 1 (all others off)
CH 1 VOLTS/DIV	0.5 V
CH 1 and CH 2 Input COUPLING	DC
Horizontal MODE	A
A SEC/DIV	1 ms
A/B SELECT	A Trigger
Trigger MODE	AUTO LEVEL
Trigger CPLG	DC
Trigger SOURCE	VERT
Trigger SLOPE	⎍ (positive)
Trigger HOLDOFF	Min
CH 2 INVERT	Off
SCOPE BW	Off
FOCUS	For best defined display

b. Connect time-mark generator (TG 501) output via a 50-Ω BNC coaxial cable and a 50-Ω BNC termination to the CH 1 input.

c. Set time-mark generator for 1 ms time markers.

d. Position first time marker horizontally to the first vertical graticule line (left-most edge of the graticule).

e. Press TIME button to display the TIME menu.

f. Press ⇤ SEC ⇥ menu button to turn on time cursors.

g. Position the reference cursor to the second time marker and the delta cursor to the tenth time marker.

h. CHECK—that the readout is 7.940 ms to 8.060 ms.

i. Press the TIME button to display the TIME menu.

j. Set ⇤ 1/SEC ⇥ on.

k. CHECK—that the readout is 124 Hz 126 Hz.

2. Delta Time Accuracy

a. Set A TIME/DIV to 1 μs.

b. Set the time-mark generator for 1-μs time marks.

c. Position the trace to the upper portion of the crt display and align the time markers horizontally with the graticule.

d. Set:

Horizontal MODE	ALT
B TIME/DIV	50 ns
B TRIGGER MODE	RUNS AFTER
⇤ SEC ⇥	On

e. Center the first intensified zone over the time marker corresponding to the second graticule line, and the second intensified zone over the time marker corresponding to the tenth graticule line.

f. Position the B sweep display to the lower portion of the crt using the TRACE SEP control, and use the ⇥ control to align the delayed sweep so that the selected time markers overlap each other exactly.

g. CHECK—that the readout is between 7.910 μs and 8.090 μs.

3. ⇤ PHASE⇥ Cursor Accuracy

a. Set generator for 1 ms time marks.

b. Set:

Horizontal MODE	A
A TIME/DIV	1 ms

c. Set TIME menu on.

d. Press ⇤ PHASE⇥ menu selection to display the ⇤ PHASE⇥ and ⇤ SET 360°⇥ menu choices.

e. Set ⇤ SET 360°⇥ on.

f. Position the first time marker to first graticule line. Then position the Reference cursor to the leading edge of the second time marker and the delta cursor to the leading edge of the tenth time-marker.

g. SET ⇤ PHASE⇥ on.

h. Position delta cursor to the leading edge of the sixth time marker.

i. CHECK—that the readout is between 177.9 and 182.1 degrees.

j. Disconnect time-mark generator.

4. ⇤ VOLTS⇥ Cursor Accuracy

a. Set:

CH 1 VOLTS/DIV	0.1 V
SEC/DIV	0.5 ms
CURSORS Menu	On
⇤ VOLTS⇥ CURSORS	On

b. Connect calibration generator (PG 506) STD AMPL output to the CH 1 input via a 50-Ω precision BNC coaxial cable.

c. Set calibration generator to STD AMPL and AMPLITUDE to 0.5 V.

d. Position bottom of the signal to the second horizontal graticule line from the bottom.

e. Position the reference cursor to the bottom of the signal and the delta cursor to the top of the signal (both cursors move with the ⇤ OR DELAY control).

f. CHECK—that the readout is between 0.495 V and 0.505 V.

5. ⫛ VOLTS⇥ Cursor Accuracy

a. Select MEASUREMENTS CURSORS menu, then select ⫛ VOLTS⇥ CURSORS.

b. Position ⇥ control to align the delta cursor with the top of the waveform.

c. CHECK—that the readout is between 0.495 V to 0.505 V, and none of the cursors move when the ⇤ OR DELAY control is rotated.

6. Tracking Cursors Position Accuracy

a. Press CLEAR DISPLAY (press twice).

b. Set:

CH 1 VOLTS/DIV	0.1 V
MEASUREMENTS CURSORS Menu	On
AUTO TRACKING MENU	On
TRACK TRIG LVL	On
TRACK ⫛	On
MENU	Off
Trigger MODE	AUTO (not AUTO LEVEL)

c. Connect calibration generator Std Ampl output via a 50-Ω BNC cable to the CH 1 input.

d. Set calibration generator for Std Ampl output of 0.5 V.

e. Adjust Trigger LEVEL control to align trigger level cursor with the bottom of the signal.

f. CHECK—the readout is 0.000 V ±0.005 V, and the GND cursor is aligned with the bottom of the signal.

g. Set trigger level cursor to align with the top of the signal.

h. CHECK—the readout is between 0.475 V and 0.525 V.

i. Press CLEAR DISPLAY.

j. Disconnect test equipment if ending here.

CH1/CH2 VOLTMETER MEASUREMENTS

Equipment Required (See Table 4-1)

Calibration generator	50 Ω BNC coaxial cable
Leveled sine-wave generator	50 Ω BNC termination
Function generator	

1. DC Volts Accuracy

a. Set:

READOUT (Intensity)	For a viewable readout
A INTEN	For a viewable trace
Vertical MODE	CH 1
CH 1 VOLTS/DIV	50 mV
CH 2 INVERT	Off
SCOPE BW	Off
CH 1 Input COUPLING	GND
Horizontal MODE	A
A SEC/DIV	1 ms
A/B SELECT	A Trigger
Trigger MODE	AUTO LEVEL
Trigger CPLG	DC
Trigger SOURCE	VERT
Trigger SLOPE	⎍ (positive)
Trigger HOLDOFF	Min
CH1/CH2 VOLTMETER	DC
FOCUS	For best defined display
Horizontal POSITION	12 o'clock

b. CHECK—ground readout is 0.0 mV ±1.2 mV.

c. Set calibration generator (PG 506) internal Square Wave/DC switch to DC.

NOTE

The PG 506 must be removed from the TM power supply to make the change to dc output from the generator. Turn the power off before removing or inserting any plug-in from the TM power supply

d. Connect the calibration generator Std Ampl output to the CH 1 input via a 50-Ω precision BNC coaxial cable.

e. Set calibration generator for Std Ampl output of 50 mV dc.

f. Set:

CH 1 VOLTS/DIV	10 mV
CH 1 Input COUPLING	DC

g. CHECK—the readout is between 49.0 mV and 51.0 mV.

h. Set CH 1 VOLTS/DIV to 0.1 V.

i. Set calibration generator for Std Ampl output 0.5 V.

j. CHECK—the readout is between 0.495 V and 0.505 V.

k. Set CH 1 VOLTS/DIV to 1 V.

l. Set calibration generator for Std Ampl output of 5 V.

m. CHECK—the readout is between 4.95 V and 5.05 V.

n. Disconnect Std Ampl signal from the CH 1 input.

2. DC Volts Normal Mode Rejection Ratio

a. Set SEC/DIV to 5 ms.

b. Connect function generator (FG 502) output to the CH 1 input via a 50-Ω BNC coaxial cable and BNC coupling capacitor.

c. Set function generator for a six-division sine-wave display amplitude at 50 Hz (with CH 1 VOLTS/DIV at 1 V).

d. Set CH 1 VOLTS/DIV to 0.2 V.

e. CHECK—that the readout is less than ±0.018 V.

f. Disconnect the function generator signal from the 2246 1Y or 2246 Mod A.

3. +Peak, -Peak, Peak-to-Peak Volts Accuracy

a. Set:

Vertical MODE	CH 2 (CH 1 off)
CH 2 VOLTS/DIV	10 mV
CH 2 Input COUPLING	DC
CH1/CH2 VOLTMETER	+PEAK

b. Set the calibration generator (PG 506) internal Square Wave/DC Switch for a square-wave output signal.

NOTE

It is necessary to remove the PG 506 from the TM power supply module to set the internal Square Wave/DC switch to square-wave output. Turn the power off before removing or inserting any plug-in from the TM power supply

c. Connect calibration generator Std Ampl output to the CH 2 input via a 50-Ω precision BNC coaxial cable.

d. Set calibration generator for Std Ampl output of 50 mV dc.

e. CHECK—that the readout is between 47.0 mV and 53.0 mV.

f. Set SCOPE BW on.

g. CHECK—the readout is between 47.7 mV and 52.3 mV.

h. Set:

CH 2 INVERT	On
CH1/CH2 VOLTMETER	-PEAK.

i. CHECK—the readout is between -47.7 mV and -52.3 mV.

j. Set SCOPE BW Off.

k. CHECK—the readout is between -47.0 mV and -53.0 mV.

l. Set:

CH1/CH2 VOLTMETER	PK-PK
CH 2 INVERT	Off

m. CHECK—the readout is between 46.5 mV and 53.5 mV.

n. Disconnect calibration generator.

4. 25 MHz +Peak, - Peak, and Peak-to-Peak Volts Accuracy

a. Connect leveled sine-wave generator (SG 503) output to the CH 2 input via a 50-Ω BNC coaxial cable and a 50-Ω BNC termination.

b. Set CH 2 VOLTS/DIV to 20 mV.

c. Set leveled sine-wave generator output for a readout of 100.0 mV ±0.5 mV at 50 kHz.

d. Set leveled sine-wave generator output for 25 MHz.

e. CHECK—the readout is between 95.0 mV and 105.0 mV.

f. Set CH1/CH2 VOLTMETER to -PEAK.

g. CHECK—the readout is between -46.0 mV and -54.0 mV.

h. Set CH1/CH2 VOLTMETER to +PEAK.

i. CHECK—the readout is between 46.0 mV and 54.0 mV.

5. 100 MHz +Peak, -Peak, and Peak-to-Peak Volts Accuracy

a. Set leveled sine wave generator (SG 503) output frequency to 100 MHz.

b. CHECK—the readout is between 34.4 mV and 54.0 mV.

c. Set CH1/CH2 VOLTMETER to -PEAK.

d. CHECK—the readout is between -34.4 mV and -54.0 mV.

e. Set CH1/CH2 VOLTMETER to PK-PK.

f. CHECK—the readout is between 69.7 mV and 107.0 mV.

g. Disconnect the leveled sine-wave signal from the 2246 1Y or 2246 Mod A.

6. Gated Volts Accuracy

a. Set:

A SEC/DIV	0.5 ms
CH 2 VOLTS/DIV	10 mV

b. Set CH1/CH2 VOLTMETER to GATED +PEAK.

c. Connect calibration generator (PG 506) Std Ampl output to the CH 2 input via a 50-Ω precision BNC coaxial cable. Set the generator to Std Ampl output, 50 mV.

d. Set delta TIME POSITION to minimum intensified zone width.

e. CHECK—that the width of the dot is less than 0.2 division.

f. Set the intensified dot to a positive peak of the displayed waveform.

g. CHECK—the readout is between 47.0 mV and 53.0 mV.

h. Disconnect the test signal from the 2246 1Y or 2246 Mod A.

EXTERNAL Z-AXIS, PROBE ADJUST AND FRONT-PANEL SETUP FUNCTIONS

Equipment Required (See Table 4-1)

Calibration generator
Two 50 Ω BNC coaxial cables
50-Ω Precision BNC coaxial cable
BNC T-connector
Test oscilloscope with a 10X probe

1. Check External Z-Axis Input

a. Set:

READOUT (Intensity)	For a viewable readout
A INTEN	For a viewable trace
Vertical MODE	CH 1
CH 1 VOLTS/DIV	1 V
CH 2 INVERT	Off
SCOPE BW	Off
CH 1 Input COUPLING	DC
Horizontal MODE	A
A SEC/DIV	0.5 ms
A/B SELECT	A Trigger
Trigger MODE	AUTO LEVEL
Trigger CPLG	DC
Trigger SOURCE	VERT
Trigger SLOPE	⌐ (positive)
MEASMN'TS	All off (press CLEAR DISPLAY 3 times)
Trigger HOLDOFF	Min
FOCUS	For best defined display
Horizontal POSITION	12 o'clock

b. Connect calibration generator (PG 506) Std Ampl output to the CH 1 and the EXT Z-AXIS inputs via a 50-Ω precision BNC coaxial cable, a BNC T-connector, and a 50-Ω BNC coaxial cable. Set generator to Std Ampl output, 5 V.

c. Set A INTEN to maximum intensity.

d. CHECK—waveform display intensity starts decreasing at 1.8 V or less and the waveform is completely blanked out at 3.8 V.

e. Set A INTEN to midrange.

f. Disconnect the test equipment from the 2246 1Y or 2246 Mod A.

2. PROBE ADJUST Output

a. Set:

CH 1 Vertical MODE	10 mV
SEC/DIV	0.2 ms
SCOPE BW	On

b. Connect a 10X probe to the CH 1 input connector and connect the probe tip to the 2246 1Y or 2246 Mod A PROBE ADJUST output. (When using Tektronix coded probes the readout changes to .1V.)

c. CHECK—For a 5-division vertical display of PROBE ADJUST square-wave signal (square-wave period is typically 1 ms, within 25%).

3. Run MAKE FACTORY SETTINGS Routine

a. Press the top and bottom Menu-Select buttons to display the SERVICE MENU.

b. Press the down-arrow menu button three times and press SELECT to display the INTERNAL SETTINGS MENU.

c. Press the down-arrow menu button once and press RUN to run the MAKE FACTORY SETTINGS routine.

d. When the routine is finished, press the CLEAR DISPLAY button to return to the normal oscilloscope mode.

THIS COMPLETES THE PERFORMANCE CHECK PROCEDURE.

ADJUSTMENT PROCEDURE

INTRODUCTION

IMPORTANT—PLEASE READ BEFORE USING THIS PROCEDURE

PURPOSE

This Adjustment Procedure returns the instrument to conformance with the Performance Requirements as listed in the Specification Tables in Section 1. Adjustments should be done only after the checks in the Performance Check Procedure (Section 4) have indicated a need for a readjustment of the instrument.

TEST EQUIPMENT REQUIRED

The test equipment listed in Table 4–1 (section 4) is all the equipment required to complete the Adjustment Procedure in this section and the Performance Check Procedure in Section 4. Test equipment specifications described in Table 4–1 are the minimum necessary to provide accurate results; you must use Equipment that meets or exceeds these specifications. Detailed operating instructions for test equipment are not given in this procedure; if more operating information is required, refer to the appropriate test equipment instruction manual.

When equipment other than that recommended is used, control settings of the test setup may need to be altered. If the exact item of equipment given as an example in Table 4–1 is not available, first check the Use column to verify use of this item. Then use the Minimum Specification column to determine whether other available test equipment might work.

LIMITS AND TOLERANCES

The limits and tolerances stated in this procedure are instrument specifications only if they are listed in the Performance Requirements column of the Table 1–1, Electrical Characteristics. Tolerances given are applicable only to the instrument under adjustment and do not include test equipment error. Adjustments must be made at an ambient temperature between +20°C and +30°C, and the instrument must have had a warm–up period of at least 20 minutes.

PARTIAL PROCEDURES

This procedure is divided in subsections to permit adjustment of individual sections of the instrument (except the Power Supply) whenever a complete readjustment is not required. For example, if only the Vertical section fails to meet the Performance Requirements (or has had repairs made or components replaced), it can be readjusted with little or no effect on other sections of the instrument. However, if the Power Supply section has undergone repairs or adjustments that change the absolute value of any of the supply voltages, a complete readjustment of the instrument is required.

At the beginning of each subsection is a list of the initial front–panel control settings required to prepare the instrument for Step 1 in that subsection. Each succeeding step within a subsection should then be done completely and in the sequence presented to ensure that control settings will be correct for steps that follow.

INTERNAL ADJUSTMENTS AND ADJUSTMENT INTERACTION

Do not preset any internal controls, since that may make it necessary to recheck or readjust a major portion of the instrument when only a partial check or adjustment might otherwise have been required. To avoid unnecessary recheck and readjustment, change an internal control setting only when a Performance Characteristic cannot be met with the original setting. When independently changing the setting of any internal control, always check Table 5–1 for possible interacting adjustments that might be required.

Table 5-1
Adjustment Interactions

| ADJUSTMENTS OR REPLACEMENTS MADE | ADJUSTMENTS AFFECTED | | |

Specific interactions are called out within certain adjustment steps to indicate that the adjustments must be repeated until no further improvement is noted.

PREPARATION FOR ADJUSTMENT

It is necessary to remove the cabinet to do the Adjustment Procedure. See the cabinet removal instructions in the Maintenance section of this manual.

All test equipment items required to do the complete Adjustment Procedure are described in Table 4-1 at the beginning of Section 4, Performance Check Procedure. The specific items of equipment needed to do each subsection in this procedure are listed at the beginning of that subsection.

Connect the test equipment and the 2246 1Y or 2246 Mod A to an appropriate ac-power source and allow 20 minutes warmup before making any adjustments.

INDEX TO ADJUSTMENT PROCEDURE

POWER SUPPLY, DISPLAY, AND Z-AXIS

1. Power Supply DC Levels (R2252) 5-4
2. Grid Bias (R2719) 5-5
3. Astigmatism (R2788) 5-5
4. Trace Rotation (Front Panel) 5-5
5. Geometry (R2784) 5-5
6. Z-axis Response (C2704) 5-5
7. Readout Jitter (R724) 5-6

VERTICAL

1. Vertical Output Gain (R703) And Readout Vertical Centering (R260) 5-7
2. CH 1 Step Balance (R12) 5-7
3. CH 2 Step Balance (R22) 5-8
4. CH 3 Step Balance (R141) 5-8
5. CH 4 Step Balance (R161) 5-8
6. CH 1 MF/LF Gain (R13) And Compensation (C1) 5-8
7. CH 1 Input Capacitance (C114) 5-8
8. CH 1 Input Compensation X10 (C11) 5-8
9. CH 1 Input Compensation X100 (C10) ... 5-8
10. CH 1 Gain (R211) 5-8
11. CH 2 MF/LF Gain (R23) And Compensation (C2) 5-8
12. CH 2 Input Capacitance (C124) 5-9
13. CH 2 Input Compensation X10 (C21) 5-9
14. CH 2 Input Compensation X100 (C20) ... 5-9
15. CH 2 Gain (R221) 5-9
16. CH 3 MF/LF Compensation (C134) 5-9
17. CH 3 Gain (R231) 5-9
18. CH 4 MF/LF Compensation (C154) 5-9
19. CH 4 Gain (R241) 5-9
20. Delay-line HF Compensation (R272, R273, R275, C274, C273) 5-10
21. CH 3 HF Compensation (C138) 5-10
22. CH 4 HF Compensation (C158) 5-10
23. CH 1 And CH 2 Bandwidth Check 5-10
24. CH 3 And CH 4 Bandwidth Check 5-11

HORIZONTAL

1. Horizontal X1 Gain (Timing) (R826) 5-12
2. Horizontal X10 Gain (Timing) (R825) 5-12
3. Readout Horizontal Gain (R823) And MAG Registration (R809) 5-12
4. A 0.5 µs Timing (C314) 5-13
5. B 0.5 µs Timing (C329) 5-13
6. 2-5 ns Timing (C807, C814) 5-13
7. X Gain (R827) 5-13

MEASUREMENT BANDWIDTH AND SELF CHARACTERIZATION

1. Volts Cal (R920) 5-14
2. B Trigger Bandwidth (R455) 5-14
3. Self Characterization 5-14

POWER SUPPLY, DISPLAY, AND Z-AXIS

Equipment Required (See Table 4-1):

Digital Multimeter (DMM)
Leveled Sine—Wave Generator
Test Oscilloscope w/10X Probe
50 Ω Coaxial Cable
50 Ω Termination

See the **ADJUSTMENT LOCATIONS** *section*

at the back of this manual for locations of test points and adjustments.

INITIAL CONTROL SETTINGS

1. Set:

Vertical MODE	CH 1
CH 1 COUPLING	DC
VOLTS/DIV	0.1 V
Vertical POSITION Controls	12 o'clock
Horizontal MODE	A
A/B SELECT	A
SEC/DIV	0.1 ms
Trigger LEVEL	12 o'clock
HOLDOFF	min (CCW)
SLOPE	⎍
Trigger MODE	AUTO LEVEL
Trigger SOURCE	CH 1
Trigger COUPLING	DC
MEASUREMENTS	OFF
MENU Displays	OFF
A INTEN	10 o'clock
READOUT	12 o'clock
FOCUS	for well defined display
SCALE ILLUM	fully CCW

PROCEDURE

1. Power Supply DC Levels (R2252)

a. Connect a Digital Multimeter (DMM) negative lead to chassis ground. Connect positive lead to first test point listed in Table 5-2 (all test points on J1204, Main board).

b. CHECK—Voltage reading is within the range given in Table 5-2.

c. Move DMM positive lead to each of the other supply voltages in Table 5-2 and check that voltage ranges are within limits.

NOTE

If all supply voltages are within the limits given in Table 5-2, it is not necessary to adjust the power supply. If voltages are not within limits, you will have to adjust the +7.5 V supply, recheck the other voltages, and continue with a complete readjustment of the instrument.

d. Connect a Digital Multimeter (DMM) negative lead to chassis ground and positive lead to +7.5 V test point (J2104-8).

e. ADJUST—+7.5 V ADJ (R2252) for +7.5 V and check that all supply voltages in Table 5-2 are within limits. The +7.5 V Adjustment is accessible through the right side frame.

f. Disconnect Digital Multimeter.

Table 5-2

Power Supply Voltage Limits

Nominal Supply Voltage	Test Point (+ lead)	Limits (0°C to 58°C) Min	Max
+7.5 V	J1204-8	+7.42 to	+7.57
+130 V	J1204-11	+127.17 to	+135.03
+59 V	J1204-10	+55.74 to	+59.18
+15 V	J1204-7	+14.65 to	+15.55
+5.0 V	J1204-1,2	+5.05 to	+5.25
-5.0 V	J1204-5	-5.14 to	-5.35
-7.5 V	J1204-9	-7.48 to	-7.78
-15 V	J1204-6	-15.57 to	-16.53

2. Grid Bias (R2719)

a. SET:

HORIZ MODE	X-Y
CH 1 VOLTS/DIV	5 V
CH 1 COUPLING	GND
BW LIMIT	On
A INTEN	Fully CCW (off)
B INTEN	Fully CCW (off)
READOUT (Intensity)	Fully CCW (off)
SCALE ILLUM	Fully CCW (off)

b. ADJUST—GRID BIAS (R2719) for a visible dot.

c. Position dot just off center screen with vertical or horizontal POSITION controls.

d. Set FOCUS control for a well defined dot.

e. ADJUST—GRID BIAS (R2719) so that dot is no longer visible.

3. Astigmatism (R2788)

a. Set:

HORIZ MODE	A
A INTEN	10 o'clock
READOUT (Intensity)	12 o'clock
SEC/DIV	5 μs
VAR SEC/DIV	Detent (fully CW)
CH 1 VOLTS/DIV	10 mV
CH 1 COUPLING	DC

b. Connect Leveled Sine-Wave Generator output to the CH 1 input connector via a 50 Ω BNC coaxial cable and a 50 Ω BNC termination. Set for a 5-division display at 50 kHz.

c. ADJUST—ASTIG (R2788) together with front-panel FOCUS control for best overall resolution of the sine-wave display.

DISCONNECT: Leveled Sine-Wave Generator.

4. Trace Rotation (Front Panel)

a. Set CH 1 COUPLING to GND.

b. Position trace to center horizontal graticule line and beginning of trace to first vertical graticule line.

c. ADJUST—TRACE ROTATION (front panel) to align trace parallel with center horizontal graticule line.

5. Geometry (R2784)

a. Set:

CH 1 VOLTS/DIV	0.1 V
CH 1 COUPLING	DC
SEC/DIV	50 μs
READOUT (intensity)	Fully ccw (off)

b. Connect Time Mark Generator to CH 1 via 50 Ω cable and 50 Ω termination. Display 10 μs time marks.

c. Position base trace below bottom graticule line.

d. ADJUST—GEOM (R2784) for minimum bowing of time marks across the full graticule area. Vertical bowing of time mark across screen should be no more than 0.1 division.

e. Disconnect Time Mark Generator.

6. Z-Axis Response (C2704) on instruments with serial numbers of below B110100 for the 2246 MOD A or below B710100 for the 2246 1Y

a. Set:

READOUT (Intensity)	12 o'clock
SEC/DIV	5 μs
READOUT (Intensity)	Fully CCW (off)

b. Connect test oscilloscope with 10X probe to R2718 (either side).

c. ADJUST—Z AXIS RESP (C2704) for flattest response possible of the signal displayed by the test scope.

d. Disconnect test oscilloscope.

7. Readout Jitter (R724)

a. Set:

READOUT (intensity)	12 o'clock
SEC/DIV	10 ms
CH 1 COUPLING	DC
A INTEN	Fully CCW (off)

b. Connect calibration generator (PG 506) STD AMPL output to CH 1 input via 50 Ω Precision coaxial cable. Set generator for STD AMPL and 1 volt.

c. ADJUST—Readout Jitter (R724) for the least amount of jitter or sway in the readout.

d. Disconnect calibration generator.

VERTICAL

Equipment Required (See Table 4-1):

Calibration Generator (PG506)
Leveled Sine-Wave Generator
50 Ω Coaxial Cable
50 Ω Termination
Precision Normalizer (20 pF)

See the **ADJUSTMENT LOCATIONS** *section*

at the back of this manual for locations of test points and adjustments.

INITIAL CONTROL SETTINGS

1. Set:

Vertical MODE	CH 1 and CH 2
INPUT COUPLING	DC
VOLTS/DIV	0.1 V
Vertical POSITION Controls	12 o'clock
Horizontal MODE	A
A/B SELECT	A
SEC/DIV	0.1 ms
Trigger LEVEL	12 o'clock
HOLDOFF	min (CCW)
SLOPE	⌐
Trigger MODE	AUTO LEVEL
Trigger SOURCE	VERT
Trigger COUPLING	DC
MEASUREMENTS	OFF
MENU Displays	OFF
A INTEN	10 o'clock
READOUT	12 o'clock
FOCUS	for well defined display
SCALE ILLUM	fully CCW

PROCEDURE

1. Vertical Output Gain (R703) and Readout Vertical Centering (R260)

a. Run ADJUST Vertical OUTPUT routine.

Select SERVICE MENU. Simultaneously press the top and bottom menu-item select buttons. Select INTERNAL SETTINGS MENU. Press down-arrow button to underline selection, then press SELECT button. Run ADJUST Vertical OUTPUT routine. Press down-arrow button three times to underline selection, then press RUN button.

NOTE

For this adjustment, the 2246 1Y or 2246 Mod A must be placed in the "normal" operating position to avoid incorrect alignment due to effects of the earth's magnetic field.

b. ADJUST—VO GAIN (R703) and RO VERT CENTERING (R260) alternately until dashed lines produced by the diagnostics are aligned with dotted lines on the graticule.

c. Press END button to end the ADJUST Vertical OUTPUT routine. Then press QUIT button to quit the Service Menu and return to the normal oscilloscope display.

2. CH 1 Step Balance (R12)

a. Set:

Vertical MODE	CH 1 (CH 2 off)
CH 1 COUPLING	GND
BW LIMIT	On

b. Position trace to center of screen.

c. ADJUST—R12 (CH 1 STEP BALANCE) so the trace does not move vertically while switching CH 1 VOLTS/DIV switch from 10 mV to 50 mV.

3. CH 2 Step Balance (R22)

a. Set:

Vertical MODE	CH 2 (CH 1 off)
CH 2 COUPLING	GND

b. Position trace to center of graticule.

c. ADJUST – R22 (CH 2 STEP BALANCE) so that trace does not move vertically while switching CH 2 VOLTS/DIV switch from 10 mV to 50 mV.

4. CH 3 Step Balance (R141)

a. Set Vertical MODE to CH 3 (CH 2 off).

b. Position trace to center of graticule.

c. ADJUST – R141 (CH 3 STEP BALANCE) so that trace does not move vertically while switching CH 3 VOLTS/DIV switch from 0.1 V to 0.5 V.

5. CH 4 Step Balance (R161)

a. Set Vertical MODE to CH 4 (CH 3 off).

b. Position trace to center of graticule.

c. ADJUST – R161 (CH 4 STEP BALANCE) so that trace does not move vertically while switching CH 4 VOLTS/DIV switch from 0.1 V to 0.5 V.

6. CH 1 MF/LF Gain (R13) and Compensation (C1)

a. Set:

Vertical MODE	CH 1 (CH 4 off)
CH 1 VOLTS/DIV	50 mV
CH 1 COUPLING	DC
SEC/DIV	50 μs

b. Connect calibration generator to CH 1 input via 50 Ω BNC coaxial cable and 50 Ω BNC termination. Set generator for HIGH AMPL. Set Period to 10 kHz and adjust Pulse Amplitude for a 5-division display.

c. ADJUST – R13 (CH 1 MF/LF GAIN) and C1 (CH 1 MF/LF COMP) for the flattest response (within 0.25 division).

7. CH 1 Input Capacitance (C114)

a. Set:

CH 1 VOLTS/DIV	10 mV
SEC/DIV	0.2 ms

b. Add precision normalizer between termination and CH 1 input connector. Set calibration generator Period to 1 kHz and adjust Pulse Amplitude for 5-division display.

c. ADJUST – C114 (CH 1 INPUT CAPACITANCE) for best flat top.

d. Remove precision normalizer from the input cable.

8. CH 1 Input Compensation X10 (C11)

a. Set:

CH 1 VOLTS/DIV	0.1 V
SEC/DIV	50 μs

b. Set calibration generator Period to 10 kHz and adjust Pulse Amplitude for a 5-division display.

c. ADJUST – C11 (CH 1 INPUT COMP X10) for flattest response (within 0.25 division).

9. CH 1 Input Compensation X100 (C10)

a. Set CH 1 VOLTS/DIV to 1 V.

b. Set calibration generator amplitude for a 5-division display.

c. ADJUST – C10 (CH 1 INPUT COMP X100) for flattest response (within 0.25 division).

10. CH 1 Gain (R211)

a. Set calibration generator to STD AMPL and Amplitude to 50 mV. Remove 50 Ω termination from input cable.

b. Set:

CH 1 VOLTS/DIV	10 mV
SEC/DIV	0.2 ms

c. ADJUST – CH 1 GAIN (R211) for exactly a 5-division display amplitude.

11. CH 2 MF/LF Gain (R23) and Compensation (C2)

a. Set:

Vertical MODE	CH 2 (CH 1 off)
CH 2 VOLTS/DIV	50 mV
CH 2 COUPLING	DC
SEC/DIV	50 μs

b. Move calibration generator signal to CH 2 input. Add 50 Ω termination.

c. Set calibration generator for HIGH AMPL. Set Period to 10 kHz and adjust Pulse Amplitude for 5-division display.

d. ADJUST—R23 (CH 2 MF/LF GAIN) and C2 (CH 2 MF/LF COMP) for flattest response (within 0.25 division).

12. CH 2 Input Capacitance (C124)

a. Set:

CH 2 VOLTS/DIV	10 mV
SEC/DIV	0.2 ms

b. Add precision normalizer between termination and CH 2 input connector. Set calibration generator Period to 1 kHz and adjust Pulse Amplitude for 5-division display.

c. ADJUST—C124 (CH 1 INPUT CAPACITANCE) for best flat top.

d. Remove precision normalizer from the input cable.

13. CH 2 Input Compensation X10 (C21)

a. Set:

CH 2 VOLTS/DIV	0.1 V
SEC/DIV	50 μs

b. Set calibration generator Period to 10 kHz and adjust Pulse amplitude for a 5-division display.

c. ADJUST—C21 (CH 2 INPUT COMP X10) for flattest response (within 0.25 division).

14. CH 2 Input Compensation X100 (C20)

a. Set CH 2 VOLTS/DIV to 1 V.

b. ADJUST—C20 (CH 2 INPUT COMP X100) for flattest response (within 0.25 division).

15. CH 2 Gain (R221)

a. Set calibration generator to STD AMPL and Amplitude to 50 mV. Remove 50 Ω termination from the input cable.

b. Set:

CH 2 VOLTS/DIV	10 mV
SEC/DIV	0.2 ms

c. ADJUST—CH 2 GAIN (R221) for exactly a 5-division display amplitude.

16. CH 3 MF/LF Compensation (C134)

a. Set:

Vertical MODE	CH 3
CH 3 VOLTS/DIV	0.1 V
SEC/DIV	50 μs

b. Move calibration generator signal to CH 3 input. Add 50 Ω termination.

c. Set calibration generator for HIGH AMPL. Set Period to 10 kHz and adjust Pulse Amplitude for a 5-division display.

d. ADJUST—C134 (CH 3 MF/LF COMP) for flattest response.

17. CH 3 Gain (R231)

a. Set:

CH 3 VOLTS/DIV	0.5 V
SEC/DIV	2 ms

b. Set calibration generator for STD AMPL. Set amplitude to 2 V. Remove 50 Ω termination.

c. ADJUST—CH 3 GAIN (R231) for exactly 4-division display amplitude.

18. CH 4 MF/LF Compensation (C154)

a. SET:

Vertical MODE	CH 4 (CH 3 off)
CH 4 VOLTS/DIV	0.1 V
SEC/DIV	50 μs

b. Move calibration generator signal to CH 4 input. Add 50 Ω termination.

c. Set calibration generator for HIGH AMPL. Set Period to 10 kHz and adjust Pulse Amplitude for a 5-division display.

d. ADJUST—C154 (CH 4 MF/LF COMP) for flattest response.

19. CH 4 Gain (R241)

a. Set:

CH 4 VOLTS/DIV	0.5 V
SEC/DIV	0.2 ms

b. Set calibration generator for STD AMPL. Set amplitude to 2 V. Remove 50 Ω termination.

c. ADJUST—CH 4 GAIN (R241) for exactly a 4-division display amplitude.

d. Disconnect calibration generator from CH 4.

e. CHECK—MEASUREMENT BANDWIDTH and SELF CHARACTERIZATION procedure and adjust as necessary.

20. Delay-line HF Compensation (R272, R273, R275, C274, C273)

a. Set:

Vertical MODE	CH 1 (CH 4 off)
CH 1 VOLTS/DIV	50 mV
SEC/DIV	20 ns
BW LIMIT	Off

b. Connect calibration generator positive-going FAST RISE OUTPUT to the CH 1 input via a 50 Ω precision coaxial cable and a 50 Ω termination.

c. Set calibration generator for FAST RISE at 1 MHz and adjust Pulse Amplitude for a 5-division display.

d. Position the top of display to the center horizontal graticule line.

e. ADJUST—DLY LINE COMP adjustments (R272, R273, R275) for flattest response and (C274, C273) for sharpest front corner with minimum overshoot. Figure 5-1 shows areas of the waveform affected by each adjustment.

NOTE

It may be necessary to adjust for a small amount of overshoot on the front corner of the pulse in order to meet the bandwidth check (step 23). Total overshoot and aberrations must be less than 0.25 division, peak-to-peak.

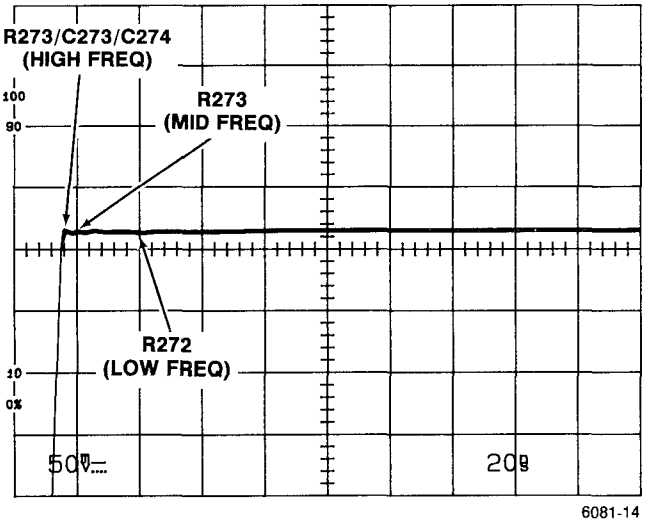

Figure 5-1. Areas of waveform affected by HF compensation.

21. CH 3 HF Compensation (C138)

a. Set:

Vertical MODE	CH 3 (CH 1 off)
CH 3 VOLTS/DIV	0.5 V

b. Move calibration generator signal to CH 3. Set Pulse Amplitude to maximum to obtain about 2.5 division display.

c. ADJUST—C138 (CH 3 HF COMP) for flattest response.

22. CH 4 HF Compensation (C158)

a. Set:

Vertical MODE	CH 4 (CH 3 off)
CH 4 VOLTS/DIV	0.5 V

b. Move calibration generator signal to CH 4.

c. ADJUST—C158 (CH 4 HF COMP) for flattest response.

d. Disconnect calibration generator.

23. CH 1 and CH 2 Bandwidth Check

a. Set:

Vertical MODE	CH 1 (CH 4 off)
CH 1 VOLTS/DIV	5 mV
SEC/DIV	0.1 ms

b. Connect leveled sine-wave generator output to the CH 1 input via a 50 Ω precision coaxial cable and a 50 Ω BNC termination.

c. Set leveled sine-wave generator output for a six-division signal amplitude at 50 kHz.

d. CHECK—the displayed signal amplitude is at least 4.2 divisions as the generator frequency is increased to 100 MHz.

NOTE

If the displayed signal amplitude drops below 4.2 divisions at any frequency below 100 MHz, readjust Delay-Line HF Compensation (step 20) with increased front-corner overshoot.

e. Repeat the frequency setup and CHECK procedure for VOLTS/DIV settings of 50 mV and 0.1 V.

f. Move the test signal to the CH 2 input.

g. Set:

Vertical MODE	CH 2 (CH 1 off)
CH 2 VOLTS/DIV	10 mV

h. Repeat the complete bandwidth check procedure for Channel 2.

24. CH 3 and CH 4 Bandwidth Check

a. Set:

Vertical MODE	CH 3 (CH 2 off)
CH 3 VOLTS/DIV	0.1 V

b. Move the leveled sine-wave generator signal to the CH 3 input.

c. Set the generator output for a six-division signal display at 50 kHz.

d. CHECK—the displayed signal amplitude is at least 4.2 divisions as the generator frequency is increased to 100 MHz.

e. Move the test signal to the CH 4 input.

f. Set:

Vertical MODE	CH 4 (CH 3 off)
CH 4 VOLTS/DIV	0.1 V

g. Repeat the procedure for CH 4.

h. Disconnect leveled sine-wave generator.

HORIZONTAL

Equipment Required (See Table 4-1):

Time-Mark Generator	50 Ω Coaxial Cable
Calibration Generator	50 Ω Termination

See the **ADJUSTMENT LOCATIONS** *section*

at the back of this manual for locations of test points and adjustments.

INITIAL CONTROL SETTINGS

1. Set:

Vertical MODE	CH 1 and CH 2
INPUT COUPLING	DC
VOLTS/DIV	0.1 V
Vertical POSITION Controls	12 o'clock
Horizontal MODE	A
A/B SELECT	A
SEC/DIV	0.1 ms
Trigger LEVEL	12 o'clock
HOLDOFF	min (CCW)
SLOPE	⌐
Trigger MODE	AUTO LEVEL
Trigger SOURCE	VERT
Trigger COUPLING	DC
MEASUREMENTS	OFF
MENU Displays	OFF
A INTEN	10 o'clock
READOUT	12 o'clock
FOCUS	for well defined display
SCALE ILLUM	fully CCW

PROCEDURE

1. Horizontal X1 Gain (Timing) (R826)

a. Set:

Vertical MODE	CH 1 (CH 2 off)
CH 1 VOLTS/DIV	0.5 V

b. Connect time mark generator to CH 1 input via 50 Ω BNC coaxial cable and 50 Ω BNC termination. Set generator for 0.1 ms time marks.

c. Position peaks of the time markers to the center horizontal graticule line.

d. ADJUST—HORIZONTAL 1X GAIN (R826) for one time mark per division over the center 8 divisions.

2. Horizontal X10 Gain (Timing) (R825)

a. Set X10 MAG to ON.

b. Set time mark generator for 10 μs time marks.

c. Position display about center screen.

d. ADJUST—HORIZONTAL X10 GAIN (R825) for one time mark per division over the center 8 divisions.

3. Readout Horizontal Gain (R823) and MAG Registration (R809)

a. Set the time mark generator for 0.5 ms time marks.

b. Position the middle time marker to the center vertical graticule line using the Horizontal POSITION control.

c. Set X10 MAG to Off.

d. ADJUST—MAG REG (R809) to position the middle time marker to the center vertical graticule line.

e. Set X10 MAG to On.

f. CHECK—for no horizontal shift in the time marker.

g. Repeat parts b through f until no shift is noted.

h. Set:

X10 MAG	Off
SEC/DIV	50 μs
A INTEN	CCW (off)

i. Select Time CURSORS. Press the TIME MEASUREMENT button and select ⇤ SEC ⇥ from the menu.

j. Rotate the ⇤ OR DELAY control to align the cursor to the second graticule line.

k. Rotate the ⇥ control so that the reading is 400.0 μs.

l. ADJUST—Both the ⇤ OR DELAY control and R823 so that the cursors are aligned exactly on the second and tenth graticule line.

m. Set A INTEN to 10 o'clock.

4. A 0.5 μs Timing (C314)

a. Set:

X10 MAG	Off
SEC/DIV	0.5 μs
B Trigger MODE	RUNS AFTER
B INTEN	10 o'clock

b. Set time mark generator for 0.5 μs time marks.

c. ADJUST—A 0.5 μS TIMING (C314) for one time mark per division over the center 8 divisions.

5. B 0.5 μs Timing (C329)

a. Set:

Horizontal MODE	B
SEC/DIV (B)	0.5 μs

b. Set time mark generator for 0.5 μs time marks.

c. Rotate the ⇤ OR DELAY control counterclockwise until the readout displays "?0.000 μs".

d. ADJUST—B 0.5 μS TIMING (C329) for one time mark per division over the center 8 divisions.

6. 2-5 ns Timing (C807, C814)

a. Set:

Horizontal MODE	A
SEC/DIV	20 ns
X10 MAG	On
CH 1	50 mV
CH 1 COUPLING	AC

b. Set time mark generator for 5 ns time marks.

c. ADJUST—2 NS TIMING (C807, C814) for 1 cycle per each 2.5 divisions over the center 8 divisions. See Figure 5-2. Use the vertical transition of the sine wave instead of the peaks for better accuracy.

d. INTERACTION—between C807 and C814. Readjust as necessary to make the timing at 2.5, 5, and 7.5 divisions within ±0.2 division (1 minor division).

e. Disconnect time mark generator.

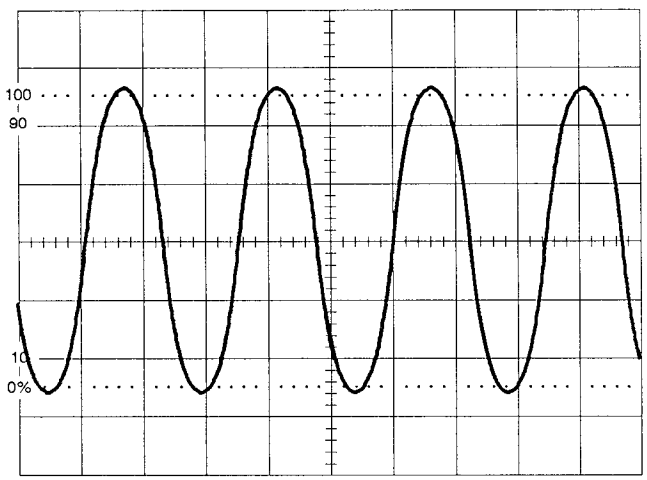

Figure 5-2. 2-5 ns Timing.

7. X Gain (R827)

a. Set:

X10 MAG	Off
Horizontal MODE	X-Y
Vertical MODE	CH 2
CH 1 VOLTS/DIV	10 mV

b. Connect calibration generator STD AMPL output to CH 1 input via 50 Ω coaxial cable. Set generator for STD AMPL. Set Amplitude to 50 mV.

c. ADJUST—X GAIN (R827) for 5 divisions of horizontal signal.

d. Disconnect calibration generator.

MEASUREMENT BANDWIDTH AND SELF CHARACTERIZATION

Equipment Required (See Table 4-1):

Digital Multimeter (DMM)
Leveled Sine—Wave Generator
50 Ω Coaxial Cable

See the ADJUSTMENT LOCATIONS *section*

at the back of this manual for locations of test points and adjustments.

INITIAL CONTROL SETTINGS

1. Set:

Vertical MODE	CH 1 and CH 2
INPUT COUPLING	DC
VOLTS/DIV	0.1 V
Vertical POSITION Controls	12 o'clock
SCOPE BW	Off
Horizontal MODE	A
A/B SELECT	A
SEC/DIV	0.1 ms
Trigger LEVEL	12 o'clock
HOLDOFF	min (CCW)
SLOPE	⎍
Trigger MODE	AUTO LEVEL
Trigger SOURCE	VERT
Trigger COUPLING	DC
MEASUREMENTS	OFF
MENU Displays	OFF
A INTEN	10 o'clock
READOUT	12 o'clock
FOCUS	for well defined display
SCALE ILLUM	fully CCW

PROCEDURE

1. Volts Cal (R920)

a. Connect digital multimeter (DMM) LO lead to chassis ground and the high lead to R921 pin 6.

b. ADJUST—VOLTS CAL (R920) so the DMM reads 0.250 V.

2. B Trigger Bandwidth (R455)

a. Set:

Vertical MODE	CH 2 (CH 1 off)
CH 2 VOLTS/DIV	20 mV
SEC/DIV	50 µs

b. Preset potentiometer R455 to midrange.

c. Run the SELF CAL routine. Press CH1/CH2 VOLTMETER button and select SELF CAL.

d. Connect leveled sine-wave generator output to the CH 2 input connector via a 50 Ω BNC precision coaxial cable and a 50 Ω BNC termination. Set generator for a 5-division display at 50 kHz.

e. Set CH1/CH2 VOLTMETER for PK-PK voltage measurement. Set output of Leveled Sine-Wave Generator for a peak-to-peak readout display of 100 mV ±0.5 mV. Adjust generator to 115 MHz.

f. ADJUST—B TRIG BANDWIDTH (R455) for a peak-to-peak readout of 75 mV ±0.5 mV.

3. Self Characterization

a. Run the SELF CAL MEASUREMENTS routine. Press both top and bottom menu-item select buttons. Select INTERNAL SETTINGS MENU, then

SELF CAL MEASUREMENTS. Press RUN to start the routine. When the routine is done, continue with part b. or press QUIT to return to normal oscilloscope mode.

b. Run MAKE FACTORY SETTINGS routine. Press the down-arrow button to select the INTERNAL SETTINGS MENU. Press SELECT, then press the down-arrow button to select MAKE FACTORY SETTINGS. Press RUN to start the routine. When done, press QUIT to return to normal oscilloscope mode.

MAINTENANCE

This section of the manual contains information for conducting preventive maintenance, troubleshooting, and corrective maintenance on the 2246 1Y and 2246 Mod A Oscilloscope. General information regarding the care and handling of the semiconductor devices that can be damaged by static discharges is provided in "Static-Sensitive Components." Routine cleaning instructions and visual inspection checking for defects are covered in "Preventive Maintenance." Internal testing capabilities and diagnostic test routines are included in the "Troubleshooting" part of this section. Circuit board removal procedures are included in the "Corrective Maintenance" part of this section.

STATIC-SENSITIVE COMPONENTS

The following precautions are applicable when performing any maintenance involving internal access to the instrument.

CAUTION

Static discharge can damage any semiconductor component in this instrument.

This instrument contains electrical components that are susceptible to damage from static discharge. Table 6-1 lists the relative susceptibility of various classes of semiconductors. Static voltages of 1 kV to 30 kV are common in unprotected environments.

When performing maintenance, observe the following precautions to avoid component damage:

1. Minimize handling of static-sensitive components.

2. Transport and store static-sensitive components or assemblies in their original containers or on a metal rail. Label any package that contains static-sensitive components or assemblies.

3. Discharge the static voltage from your body by wearing a grounded antistatic wrist strap while handling these components. Servicing static-sensitive components or assemblies should be performed only at a static-free work station by qualified service personnel.

Table 6-1
Relative Susceptibility to Static-Discharge Damage

Semiconductor Classes	Relative Susceptibility Levels [a]
MOS or CMOS microcircuits or discretes, or linear microcircuits with MOS inputs (Most Sensitive)	1
ECL	2
Schottky signal diodes	3
Schottky TTL	4
High-frequency bipolar transistors	5
JFET	6
Linear microcircuits	7
Low-power Schottky TTL	8
TTL (Least Sensitive)	9

[a]Voltage equivalent for levels (voltage discharged from a 100-pF capacitor through a resistance of 100 Ω):

1 = 100 to 500 V
2 = 200 to 500 V
3 = 250 V
4 = 500 V
5 = 400 to 600 V
6 = 600 to 800 V
7 = 400 to 1000 V (est)
8 = 900 V
9 = 1200 V

4. Keep anything capable of generating or holding a static charge off the work station surface.

5. Keep the component leads shorted together whenever possible.

6. Pick up components by their bodies, never by their leads.

7. Do not slide the components over any surface.

8. Avoid handling components in areas that have a floor or work-surface covering capable of generating a static charge.

9. Use a soldering iron that is connected to earth ground.

10. Use only approved antistatic, vacuum-type desoldering tools for component removal.

PREVENTIVE MAINTENANCE

INTRODUCTION

Preventive maintenance consists of cleaning, visual inspection, and checking instrument performance. Preventive maintenance on a regular basis may prevent instrument malfunction and improve instrument reliability. The required frequency of maintenance depends on the severity of the environment in which the instrument is used. An appropriate time to do preventive maintenance is just before instrument adjustment.

INSPECTION AND CLEANING

Visually inspect and clean the 2246 1Y or 2246 Mod A as often as operating conditions require. Accumulation of dirt in the instrument can cause overheating and component breakdown. Dirt on components acts as an insulating blanket, preventing efficient heat dissipation. It also provides an electrical conduction path that could result in instrument failure, especially under high-humidity conditions.

CAUTION

Do not use chemical cleaning agents which might damage the plastics used in this instrument. Use a nonresidue-type cleaner, preferably isopropyl alcohol or a solution of 1% mild detergent with 99% water. Before using any other type of cleaner, consult your Tektronix Service Center or representative.

Exterior

INSPECTION. Inspect the external portions of the instrument for damage, wear, and missing parts; use Table 6-2 as a guide. Instruments that appear to have been dropped or otherwise abused should be checked thoroughly to verify correct operation and performance. Deficiencies that could cause personal injury or could lead to further instrument damage should be repaired immediately.

CAUTION

Do not allow moisture to get inside the instrument during external cleaning. Use only enough liquid to dampen the cloth or applicator.

CLEANING. Loose dust on the outside of the instrument can be removed with a soft cloth or small soft-bristle brush. The brush is particularly useful on and around the controls and connectors. Remove remaining dirt with a soft cloth dampened in a mild detergent-and-water solution. Do not use abrasive cleaners.

Clean the light filters and the crt face with a soft lint-free cloth dampened with either isopropyl alcohol or a mild detergent-and-water solution.

Interior

To access internal portions of the instrument for inspection and cleaning, refer to the Removal and Replacement Instructions in the Corrective Maintenance part of this section.

Table 6-2
External Inspection Checklist

Item	Inspect For	Repair Action
Cabinet, Front Panel, and Cover	Cracks, scratches, deformations, damaged hardware or gaskets.	Touch up paint scratches and replace defective components.
Front-panel controls	Missing, damaged, or loose knobs, buttons, and controls.	Repair or replace missing or defective items.
Connectors	Broken shells, cracked insulation, and deformed contacts. Dirt in connectors.	Replace defective parts. Clean or wash out dirt.
Carrying Handle	Correct operation.	Replace defective parts.
Accessories	Missing items or parts of items, bent pins, broken or frayed cables, and damaged connectors.	Replace damaged or missing items, frayed cables, and defective parts.

Table 6-3
Internal Inspection Checklist

Item	Inspect For	Repair Action
Circuit Boards	Loose, broken, or corroded solder connections. Burned circuit boards. Burned, broken, or cracked circuit-run plating.	Clean solder corrosion with an eraser and flush with isopropyl alcohol. Resolder defective connections. Determine cause of burned items and repair. Repair defective circuit runs.
Resistors	Burned, cracked, broken, or blistered.	Replace defective resistors. Check for cause of burned component and repair as necessary.
Solder Connections	Cold solder or rosin joints.	Resolder joint and clean with isopropyl alcohol.
Capacitors	Damaged or leaking cases. Corroded solder on leads or terminals.	Replace defective capacitors. Clean solder connections and flush with isopropyl alcohol.
Semiconductor	Loosely inserted in sockets. Distorted pins.	Firmly seat loose semiconductors. Remove devices having distorted pins. Carefully straighten pins (as required to fit the socket), using long-nose pliers, and reinsert firmly. Ensure that straightening action does not crack the pins, causing them to break.
Wiring and Cables	Loose plugs or connectors. Burned, broken, or frayed wiring.	Firmly seat connectors. Repair or replace defective wires or cables.
Chassis	Dents, deformations, and damaged hardware.	Straighten, repair, or replace defective hardware.

INSPECTION. Inspect the internal portions of the 2246 1Y or 2246 Mod A for damage and wear, using Table 6–3 as a guide. Repair deficiencies immediately. The corrective procedure for most visible defects is obvious; however, particular care must be taken if heat-damaged components are found. Since overheating usually indicates other trouble in the instrument, it is important that the cause of overheating be corrected to prevent further damage.

If any electrical component is replaced, conduct a Performance Check for the affected circuit and for other closely related circuits (see Section 4 for the Performance Check). If repair or replacement work is done on any of the power supplies, conduct a complete Performance Check and, if so indicated, an instrument readjustment (see Section 5 for Adjustment Procedure).

CAUTION

To prevent damage from electrical arcing, ensure that circuit boards and components are dry before applying power to the instrument.

CLEANING. To clean the interior, blow off dust with dry, low-pressure air (approximately 9 psi). Remove any remaining dust with a soft brush or a cloth dampened with a solution of mild detergent and water. A cotton-tipped applicator is useful for cleaning in narrow spaces and on circuit boards. If these methods do not remove all the dust or dirt, the instrument may be spray washed using a solution of 1% mild detergent and 99% water as follows:

1. Remove covers and shields to reach parts to be cleaned (see Removal and Replacement Instructions).
2. Spray wash dirty parts with the detergent-and-water solution; then use clean water to thoroughly rinse them.
3. Dry all parts with low-pressure air.
4. Dry all components and assemblies in an oven or drying compartment using low-temperature (125°F to 150°F) circulating air.

SWITCH CONTACTS. Switch contacts are permanently treated when assembled. Neither cleaning nor other preventive maintenance is necessary, unless the switch board is replaced or the switch assembly has remained disassembled for a long period of time.

LUBRICATION

A regular periodic lubrication program for the instrument is not necessary. Most of the potentiometers used in this instrument are permanently sealed and generally do not require periodic lubrication. The backs of the front-panel knob guides have been lubricated when assembled and will require lubrication again only when the front panel assembly is replaced. Rotary switches are installed with proper lubrication when assembled and will require lubrication only when the rotor is replaced.

SEMICONDUCTOR CHECKS

Periodic checks of the transistors and other semiconductors in the oscilloscope are not recommended. The best check of semiconductor performance is actual operation in the instrument.

PERIODIC READJUSTMENT

To ensure accurate measurements, check the performance of this instrument every 2000 hours of operation, or if used infrequently, once each year. If you replace any components, it may be necessary to readjust the affected circuits. The silver-oxide battery used in the 2246 1Y MUST be replaced annually. Refer to Corrective Maintenance in this section for more information on battery replacement.

Complete Performance Check instructions are given in Section 4 of this manual; adjustment instructions are given in Section 5. The Performance Check Procedure can be helpful in localizing certain troubles in the instrument. In some cases, minor problems may be revealed or corrected by readjustment. If only a partial adjustment is performed, see Table 5–1 (the interaction chart) for possible adjustment interaction with other circuits.

TROUBLESHOOTING

INTRODUCTION

Preventive maintenance performed on a regular basis should reveal most potential problems before an instrument malfunctions. However, should troubleshooting be required, the following information is provided to aid in locating a fault. In addition, the material presented in the Theory of Operation and Diagrams sections of this manual may be helpful while troubleshooting.

TROUBLESHOOTING AIDS

Diagnostic Firmware

This instrument contains built-in diagnostic routines that can aid in localizing failures. An automatic power-up self test checks the system RAM and ROM and readout interface circuitry. If a failure is detected, this information is presented in either of two ways: a flashing code display on the Trigger LEDs or, if the instrument is capable of presenting a readout, error messages in the crt display. In addition to the power-on testing, various diagnostic routines can be run from the service mode using the SERVICE MENU. (See Internal Testing Capabilities in this subsection for the details.)

Schematic Diagrams

Complete schematic diagrams are located on tabbed foldout pages in the Diagrams section. Portions of circuitry mounted on each circuit board are enclosed by heavy black lines. The assembly number and name(s) of the circuit(s) are shown near the top or the bottom edge of each diagram.

Functional blocks on schematic diagrams are outlined with a wide gray line. Components within the outlined area perform the function designated by the block label. The Theory of Operation uses these functional block names when describing circuit operation as an aid in cross-referencing between the circuit description and the schematic diagrams.

Component numbers and electrical values of components in this instrument are shown on the schematic diagrams. Refer to the first page of the Diagrams section for the reference designators and symbols used to identify components. Important voltages and waveform reference numbers (enclosed in hexagonal-shaped boxes) are also shown on each diagram. Waveform illustrations are located adjacent to their respective schematic diagram.

Circuit Board Illustrations

Circuit board illustrations showing the physical location of each component are provided for use in conjunction with each schematic diagram. Each board illustration is found in the Diagrams section on the back of a foldout page, preceding the first related schematic diagram(s).

The locations of waveform test points are marked on the circuit board illustrations with hexagonal outlined numbers corresponding to the waveform numbers on both the schematic diagram and the waveform illustrations.

Circuit Board Locations

The location of a circuit board within the instrument is shown on each foldout page along with the circuit board illustration.

Circuit Board Interconnections

A circuit board interconnection diagram (schematic Diagram 16) is provided in the Diagrams section to aid in tracing a signal path or power source between boards. All wire, plug, and jack numbers are shown along with their associated wire or pin numbers and signal names.

Power Distribution

Two Power Distribution diagrams (schematic Diagrams 14 and 15) are provided to aid in troubleshooting power supply problems. These diagrams show the components that the various voltages are applied to and the jumper connections and decoupling components used to apply the power to those circuits. Excessive loading on a power supply by a circuit fault may be isolated by disconnecting the appropriate jumpers.

Grid Coordinate System

Each schematic diagram and circuit board illustration has a grid border along its left and top edges. A table located next to each schematic diagram lists the grid coordinates of each component shown in that diagram. To aid in physically locating

components on the circuit board, the table also lists the grid coordinates of each component in the circuit board illustration.

Near each circuit board illustration is an alpha-numeric listing of all components mounted on that board. The second column in each listing identifies the schematic diagram in which each component can be found. These component-locator tables are especially useful when more than one schematic diagram is associated with a particular circuit board.

Component Color Coding

Information regarding color codes and markings of resistors and capacitors is located in the color-coding illustration (Figure 9-1) at the beginning of the Diagrams section.

RESISTOR COLOR CODE. Resistors used in this instrument are carbon-film, composition, or precision metal-film types. They are usually color coded with the EIA color code; however, some metal-film type resistors may have the value printed on the body. The color code is interpreted starting with the stripe nearest to one end of the resistor. Composition resistors have four stripes; these represent two significant digits, a multiplier, and a tolerance value. Metal-film resistors have five stripes representing three significant digits, a multiplier, and a tolerance value.

CAPACITOR MARKINGS. Capacitance values of common disc capacitors and small electrolytics are marked on the side of the capacitor body. White ceramic capacitors are color coded in picofarads, using a modified EIA code.

Dipped tantalum capacitors are color coded in microfarads. The color dot indicates both the positive lead and the voltage rating. Since these capacitors are easily destroyed by reversed or excessive voltage, be careful to observe the polarity and voltage rating when replacing them.

DIODE COLOR CODE. The cathode end of each glass-encased diode is indicated by either a stripe, a series of stripes or a dot. For most diodes marked with a series of stripes, the color combination of the stripes identifies three digits of the Tektronix Part Number, using the resistor color-code system. The cathode and anode ends of a metal-encased diode may be identified by the diode symbol marked on its body.

Semiconductor Lead Configurations

Figure 9-2 in the Diagrams section shows the lead configurations for semiconductor devices used in the instrument. These lead configurations and case styles are typical of those used at completion of the instrument design. Vendor changes and performance improvement changes may result in changes of case styles or lead configurations. If the device in question does not appear to match the configuration shown in Figure 9-2, examine the associated circuitry or consult a manufacturer's data sheet.

Multipin Connections

This instrument uses two types of cable connectors. The main type is an etched-circuit ribbon cable with pin connectors crimped directly to the end of the cable. The number one pin is indicated by a mark on the ribbon cable. The other type of connector is a plastic holder containing connectors crimped to the ends of individual wires. Orientation, where important, is indicated by a triangle (arrow).

TROUBLESHOOTING EQUIPMENT

The equipment listed in Table 4-1 of this manual, or equivalent equipment, may be useful when troubleshooting this instrument.

TROUBLESHOOTING TECHNIQUES

The following procedure is arranged in an order that enables checking simple trouble possibilities before requiring more extensive troubleshooting. The first two steps use diagnostic routines built into the operating system of the instrument.

The next four procedures are check steps that ensure proper control settings, connections, operation, and adjustment. If the trouble is not located by these checks, the remaining steps will aid in locating the defective component. When the defective component is located, replace it using the appropriate replacement procedure given under Corrective Maintenance in this section.

CAUTION

Before using any test equipment to make measurements on static-sensitive, current-sensitive, or voltage-sensitive components or assemblies, ensure that any voltage or current supplied by the test equipment does not exceed the limits of the component to be tested.

1. Power-up Tests

When the instrument power is applied, self tests are automatically run to verify proper operation of the system RAM and ROM and readout interface circuitry. If the power-up test fails, failure codes appear in the Trigger Mode LEDs to identify the general location of the fault. (See Power-Up Testing later in this section for failure-code information.)

2. Diagnostic Routines

Various diagnostic routines can be run from the service mode. The routines can be run at any time by displaying the SERVICE MENU and selecting the desired item from the menu using front panel pushbuttons.

Entry into the SERVICE MENU and its uses are explained in the Diagnostic Routines discussion later in this section.

3. Check Control Settings

Incorrect control settings can give a false indication of instrument malfunction. If there is any question about the correct function or operation of any control, refer to the Operating Information in the 2246 1Y and 2246 Mod A Operators Manual.

4. Check Associated Equipment

Before proceeding, ensure that any equipment used with the 2246 1Y or 2246 Mod A is operating correctly. Verify that input signals are properly connected and that the interconnecting cables are not defective. Check that the ac-power-source voltage to all equipment is correct.

5. Visual Check

WARNING

To avoid electrical shock, disconnect the instrument from the ac power source before making a visual inspection of the internal circuitry.

Perform a visual inspection. This check may reveal broken connections or wires, damaged components, semiconductors not firmly mounted, damaged circuit boards, or other clues to the cause of an instrument malfunction.

6. Check Instrument Performance and Adjustment

Check the performance of either those circuits where trouble appears to exist or the entire instrument. An apparent trouble may be the result of misadjustment. The complete performance check is given in Section 4 of this manual and adjustment instructions are given in Section 5.

7. Isolate Trouble to a Circuit

To isolate problems, use any symptoms noticed when checking the instrument's operation to help localize the trouble to a particular circuit. For example, if the vertical deflection is incorrect on all channels, the problem is most likely from the delay line driver to the vertical output; if deflection is bad only on one channel, the problem is from the attenuator of that channel to the input of the delay line driver. The detailed block diagram shown in the foldout section may be used as an aid in determining signal flow and control line dependency for correct circuit operation. Refer to the troubleshooting hints given in Table 6-6 for diagnostic routine failures. Troubleshooting hints by diagram are given immediately following Table 6-6, and Table 6-9 may be used to aid in locating a problem in the measurement system.

8. Check Power Supplies

WARNING

For safety reasons, an isolation transformer must be used between the ac power main and the instrument's ac power input whenever troubleshooting is done with the cabinet removed. This is especially important when working in the Preregulator and Inverter Power Supply sections of the instrument.

When trouble symptoms appear in more than one circuit, first check the power supplies; then check the affected circuits by taking voltage and waveform readings. Check first for the correct output voltage of each individual supply. These voltages are measured between J1204 (interface connector between power supply and main board) and ground (J1204 pin 4 or 8). See the associated circuit board illustration and Table 6-4.

Voltages levels may be measured either with a DMM or with an oscilloscope. Voltage ripple amplitudes must be measured using an oscilloscope. Use a 1X probe with as short a ground lead as possible to minimize stray pickup.

NOTE

Use 20 MHz bandwidth limiting on the test oscilloscope. A higher bandwidth may produce higher observed ripple levels.

If the power-supply voltages and ripple are within the listed ranges in Table 6-4, the supply can be assumed to be working correctly. If they are outside the range, the supply may be either misadjusted, operating incorrectly, or excessively loaded. The power supply adjustment procedure is given in the Power Supply, Display, and Z-Axis subsection of Section 5 (the Adjustment Procedure).

A defective component elsewhere in the instrument can create the appearance of a power-supply problem and may also affect the operation of other circuits. Use the power distribution diagrams (schematic Diagrams 14 and 15 in the foldouts) to aid in localizing a loading problem to a particular circuit.

9. Check Circuit Board Interconnections

After the trouble has been isolated to a particular circuit, again check for loose or broken connections, improperly seated semiconductors, and heat-damaged components.

10. Check Voltages and Waveforms

Often the defective component can be located by checking circuit voltages or waveforms. Typical voltages are listed on the schematic diagrams. Waveforms indicated on the schematic diagrams by hexagonal-outlined numbers are shown adjacent to the diagrams. Waveform test points are shown in the circuit board illustrations.

NOTE

Voltages and waveforms indicated on the schematic diagrams are not absolute and may vary slightly between instruments. To establish operating conditions similar to those used to obtain these readings, see the Voltage and Waveform Setup Conditions preceding the waveform illustrations in the Diagrams section.

Note the recommended test equipment, front-panel control settings, voltage and waveform conditions, and cable-connection instructions. Any special control settings required to obtain a given waveform are noted under the waveform illustration. Volts/Div and Sec/Div settings of the test oscilloscope for a waveform are indicated in the waveform illustration.

Table 6-4

Power Supply Voltage and Ripple Limits

Nominal Supply Voltage	Test Point (+ lead) Test Point (+ lead)	Limits (-10°C to 55°C)		P-P Ripple[a]	
		Min	Max	60-150 Hz	20-40 kHz
+130	J1204-11	+127	+135	70 mV	70 mV
+58	J1204-10	+55	+59	40 mV	120 mV
+15	J1204-7	+14.6	+15.6	8 mV	4 mV
+7.5	J1204-8	+7.4	+7.6	8 mV	4 mV
+5.0	J1204-1,2	+5.0	+5.3	30 mV	20 mV
-5.0	J1204-5	-5.2	-5.4	4 mV	4 mV
-7.5	J1204-9	-7.5	-7.8	4 mV	4 mV
-15 unreg	J1204-6	-15.5	-16.6	10 mV	100 mV

[a]At rated load.

11. Check Individual Components

WARNING

To avoid electric shock, always disconnect the instrument from the ac power source before removing or replacing components.

The following procedures describe methods of checking individual components. Two-lead components that are soldered in place are most accurately checked by first disconnecting one end from the circuit board. This isolates the measurement from the effects of the surrounding circuitry. See Figure 9-1 for component value identification and Figure 9-2 for semiconductor lead configurations.

CAUTION

When checking semiconductors, observe the static-sensitivity precautions given at the beginning of this section.

TRANSISTORS. A good check of a transistor is actual performance under operating conditions. A transistor can most effectively be checked by substituting a known-good component. However, be sure that circuit conditions are not such that a replacement transistor might also be damaged. If substitute transistors are not available, use a dynamic-type transistor checker for testing. Static-type transistor checkers are not recommended, since they do not check operation under simulated operating conditions.

When troubleshooting transistors in the circuit with a voltmeter, measure both the emitter-to-base and emitter-to-collector voltages to determine whether they are consistent with normal circuit voltages. Voltages across a transistor may vary with the type of device and its circuit function.

Some of these voltages are predictable. The emitter-to-base voltage for a conducting silicon transistor will normally range from 0.6 V to 0.8 V. The emitter-to-collector voltage for a saturated transistor is about 0.2 V. Because these values are small, the best way to check them is by connecting a sensitive voltmeter across the junction rather than comparing two voltages taken with respect to ground. If the former method is used, both leads of the voltmeter must be isolated from ground.

If voltage values measured are less that those just given, either the device is shorted or no current is flowing in the external circuit. If values exceed the emitter-to-base values given, either the junction is reverse biased or the device is defective. Voltages exceeding those given for typical emitter-to-collector values could indicate either a nonsaturated device operating normally or a defective (open-circuited) transistor. If the device is conducting, voltage will be developed across the resistors in series with it; if open, no voltage will be developed across the resistors unless current is being supplied by a parallel path.

CAUTION

When checking emitter-to-base junctions, do not use an ohmmeter range that has a high internal current. High current may damage the transistor. Reverse biasing the emitter-to-base junction with a high current may degrade the current-transfer ratio (Beta) of the transistor.

A transistor emitter-to-base junction also can be checked for an open or shorted condition by measuring the resistance between terminals with an ohmmeter set to a range having a low internal source current, such as the R X 1 kΩ range. The junction resistance should be very high in one direction and much lower when the meter leads are reversed.

When troubleshooting a field-effect transistor (FET), the voltage across its elements can be checked in the same manner as previously described for other transistors. However, remember that in the normal depletion mode of operation, the gate-to-source junction is reverse biased; in the enhanced mode, the junction is forward biased.

INTEGRATED CIRCUITS. An integrated circuit (IC) can be checked with a voltmeter, test oscilloscope, or by direct substitution. A good understanding of circuit operation is essential when troubleshooting a circuit having IC components. Use care when checking voltages and waveforms around the IC so that adjacent leads are not shorted together. An IC test clip provides a convenient means of clipping a test probe to an IC.

CAUTION

When checking a diode, do not use an ohmmeter scale that has a high internal current. High current may damage a diode. Checks on diodes can be performed in much the same manner as those on transistor emitter-to-base junctions.

DIODES. A diode can be checked for either an open or a shorted condition by measuring the resistance between terminals with an ohmmeter set to a range having a low internal source current, such as the R X 1 kΩ range. The diode resistance should be very high in one direction and much lower when the meter leads are reversed.

Silicon diodes should have 0.6 V to 0.8 V across their junctions when conducting; Schottky diodes about 0.2 V to 0.4 V. Higher readings indicate that they are either reverse biased or defective, depending on polarity.

RESISTORS. Check resistors with an ohmmeter. Refer to the Replaceable Electrical Parts list for the tolerances of resistors used in this instrument. A resistor normally does not require replacement unless its measured value varies widely from its specified value and tolerance.

INDUCTORS. Check for open inductors by checking continuity with an ohmmeter. Shorted or partially shorted inductors can usually be found by checking the waveform response when high-frequency signals are passed through the circuit.

CAPACITORS. A leaky or shorted capacitor can best be detected by checking resistance with an ohmmeter set to one of the highest ranges. Do not exceed the voltage rating of the capacitor. The resistance reading should be high after the capacitor is charged to the output voltage of the ohmmeter. An open capacitor can be detected with a capacitance meter or by checking whether the capacitor passes ac signals.

12. Repair and Adjust the Circuit

If any defective parts are located, follow the replacement procedures given under Corrective Maintenance in this section. After any electrical component has been replaced, the performance of that circuit and any other closely related circuit should be checked. Since the power supplies affect all circuits, performance of the entire instrument should be checked if work has been done on the power supplies. Readjustment of the affected circuitry may be necessary. Refer to the Performance Check Procedure and the Adjustment Procedure, (sections 4 and 5) and to Table 5-1 (Adjustment Interactions).

INTERNAL TESTING CAPABILITIES

The diagnostics built into the 2246 1Y and 2246 Mod A permit the technician to test much of the digital circuitry and the digital-to-analog interface. The following text describes the testing capabilities of the Measurement Processor and the firmware controlled circuitry.

Power-Up Testing

The systems shown in Figure 6-1 are tested at power-on. Failure codes appear in the Trigger MODE LEDs, with ON being shown as "x" and OFF as "o" in the figure. In the event of a display failure where error message cannot be displayed on the crt, the codes indicate a failure area to begin troubleshooting.

Tests Run	Failure Code (seen on the Trigger LEDS)					
	AUTO LEVEL	AUTO	NORM	TV LINE	TV FIELD	SGL SEQ
System RAM	X	0	0	0	0	0
System ROM	0	X	0	0	0	0
Readout Interface	0	0	X	0	0	0

6557-95

Figure 6-1. Power-on test failure codes.

Power-up tests performed are:

1. RAM diagnostics—failures indicated by flashing AUTO LEVEL lamp. Three diagnostics are run on all locations in the RAM:
   a. Store and read 00.
   b. Store and read FF.
   c. Store and read pseudo-random pattern.

2. ROM diagnostics—failures indicated by flashing AUTO lamp. Tests all of ROM, except for ROM header. Runs proprietary version of CRCC test.

3. Readout interface diagnostics—failures indicated by flashing NORM lamp. Performs a marching-one test around the loop from D7-D0 to R7-R0 and back.

SERVICE MODE

The service mode driver menu is accessed by pressing the top and the bottom menu-item buttons at the same time. The initial SERVICE MENU will be displayed as shown in Figure 6-2. Each service menu display has two parts; the part to the left is the service menu, and the part to the right is the modifier menu.

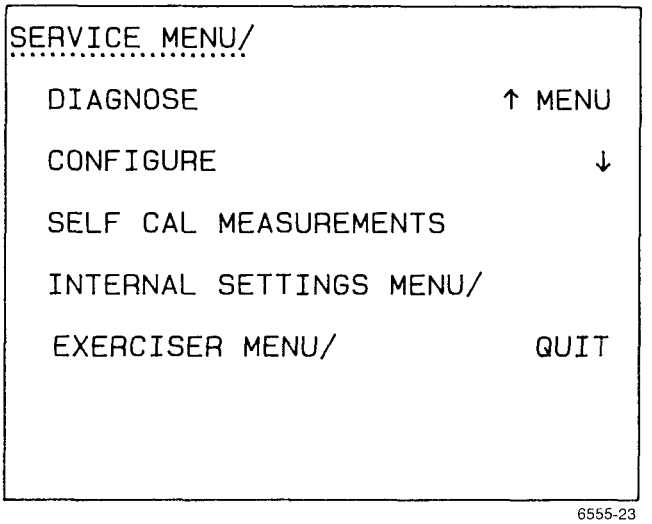

Figure 6-2. Initial SERVICE MENU.

Each service menu has a title and a number of selectable items in the menu. The title appears in the top line of the crt display, and the selectable items appear under the title, indented (see Figure 6-2). Menu choices that are names of sub-menus have a following slash (/), and when one is underlined, the word "SELECT" appears in the modifier menu list. When a choice with sub-menus is selected, the sub-menu choices are displayed on the left side of the screen with the name of the selected sub-menu displayed in the top line.

A menu choice that has no following slash is an executable service routine. The routine may be run by underlining it and pressing the menu button next to the RUN label that appears in the modifier menu list. Executable servicing selections are: diagnostics that return either a pass message or a fail message along with service data; one-shot exercisers that carry out some service and immediately return to the menu; or regular exercisers that carry out a service while continuously displaying service data.

An underlined service-menu choice is available for selection. To select a menu item, use the buttons next to the up-arrow and down-arrow symbols to move the underline up or down in the SERVICE MENU. When the underline is below the sub-menu title, pressing the menu button next to up-arrow MENU label returns to the preceding menu containing that sub-menu (an up-menu operation).

Pressing the QUIT selection or CLEAR Display button at any time the choice is displayed will cause the scope to return to normal oscilloscope mode. If a service routine is operating that has an END menu selection displayed, pressing the button next to END exits the routine and returns to the selection menu (where QUIT is displayed). Routines that run once, return to the selection menu when finished.

The diagnostic tests in the SERVICE MENU may be run with a conditional setting that determines how many times the routine is done. The conditional MODE setting menu choice appears in the modifier menu when the DIAGNOSE choice in the SERVICE MENU is underlined (see Figure 6-3). One of the following mode types will be displayed:

ONCE, CONTINUOUS, UNTIL PASS, or UNTIL FAIL

Change the mode type displayed in the bottom line by pressing the MODE button. When ONCE is the mode, the diagnostic is run once, and the result is displayed. When CONTINUOUS is the mode, the diagnostics are run continuously. When UNTIL PASS is the mode, the diagnostics are run until they pass. When UNTIL FAIL is the mode, the diagnostics are run until they fail. In order to stop a diagnostic that is looping in the CONTINUOUS, UNTIL PASS, or UNTIL FAIL mode, press the HALT button. The diagnostic will stop and display the current status. When the status is displayed, press END to return to the SERVICE MENU choices.

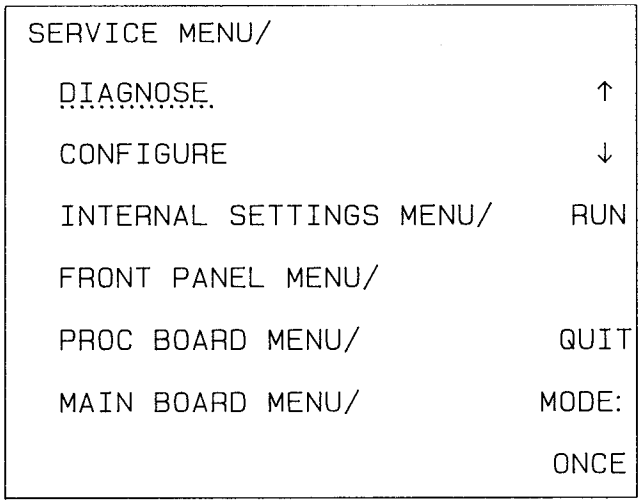

Figure 6-3. SERVICE MENU with DIAGNOSE choice selected.

Service Routines

Descriptions of the available service routines are given in Table 6-5. The complete SERVICE MENU has this structure:

SERVICE MENU/
- DIAGNOSE
- CONFIGURE
- SELF CAL MEASUREMENTS
- INTERNAL SETTINGS MENU/
  - MAKE FACTORY SETTINGS
  - LOAD STORE/RECALL SETUPS
  - ADJUST VERTICAL OUTPUT
- EXERCISER MENU/
  - FRONT PANEL MENU/
    - EXERCISE POTS
    - EXERCISE LEDS
    - EXERCISE SWITCHES
  - PROC BOARD MENU/
    - A TO D MENU/
      - EXERCISE DACS
      - EXERCISE PORTS
    - READOUT MENU/
      - SHOW READOUT ROM HEADER
      - EXERCISE RO INTERFACE
    - EXERCISE TIME REF
    - SHOW SYSTEM ROM HEADER
    - SHOW AUTO RESTARTS
  - MAIN BOARD MENU/
    - SHIFT REGISTER MENU/
      - EXERCISE SR 0
      - EXERCISE SR 1
      - EXERCISE SR 2
    - EXERCISE VOLT REF

Table 6-5
SERVICE MENU Selections

Menu Item	Action
DIAGNOSE	Runs all diagnostics in sequence, stopping at the first failed diagnostic. (See Table 6-6 for a diagnostic test failure troubleshooting guide.) Diagnostics are: RO (readout) INTERFACE ROM RAM SLIC CONTROL REG SHIFT REGISTERS (in SR2, SR0, SR1, SR3 order) DAC Triggers
CONFIGURE	Configures the scope-mode operation of the instrument according to the users' wishes. Configuration is done by answering yes/no questions. The questions are: KEEP MENU ON WHEN MEAS SELECTED? The menu remains displayed after a measurement function has been selected from one of the Measurements menus.

Table 6-5 (cont)
SERVICE MENU Selections

Menu Item	Action
CONFIGURE (cont)	RECALL ONLY (IN STORE/RECALL)? This feature is not available on the 2246 1Y and 2246 Mod A. However, a selection *must* be made when stepping through the CONFIGURE menu. KEEP MENU ON WHEN S/R SELECTED. This feature is not available on the 2246 1Y and 2246 Mod A. However, a selection *must* be made when stepping through the CONFIGURE menu. KEEP READOUT ON IN SGL SEQ? Selecting YES causes the readout to be on constantly when in SGL SEQ trigger mode. Selecting NO causes the readout to flash on for a brief period after the signal display sequence has finished.
SELF CAL MEASUREMENTS	Self characterizes the gain and offset errors in the vertical system and time base so that they may be compensated for in the measurements. This should be run only after instrument is warmed up properly, although if desired, it can be used to compensate for an unusual operating temperature.
MAKE FACTORY SETTINGS	Resets the front panel settings to those shipped with the instrument. Used to produce a known setup condition. The following is a partial list of settings: Vertical MODE — CH 1 AND CH 2 CH 1/CH 2 COUPLING — DC CH 1, 2, 3, 4 VOLTS/DIV — .1 V CH 2 INVERT — OFF SCOPE BW — OFF HORIZONTAL MODE — A A SEC/DIV — .1 ms B SEC/DIV — 1 µs A/B Trigger SLOPE — ⎍ A/B Trigger SELECT — A A Trigger MODE — AUTO LEVEL B Trigger MODE — RUNS AFTER A/B Trigger SOURCE — CH 1 A/B Trigger COUPLING — DC MEASUREMENTS — OFF
LOAD STORE/RECALL SETUPS	Not available on the 2246 1Y or 2246 Mod A. Pressing this selection has no effect on instrument operation.
ADJUST VERTICAL OUTPUT	Used to adjust the vertical output gain and centering (see Adjustment Procedure in Section 5).
EXERCISE POTS	Shows the name of the latest digitized potentiometer moved, along with its hexadecimal value (from FF to OO). Starts by showing the HORIZ POSITION and its value until another pot is adjusted. The FOCUS and SCALE ILLUM controls are not digitized and therefore are not checked with this exerciser. Pressing END exits the exerciser.

Table 6-5 (cont)
SERVICE MENU Selections

<table>
<tr><th>Menu Item</th><th>Action</th></tr>
<tr><td>EXERCISE LEDS</td><td>Uses the delay control to check for adjacent-row or adjacent-column shorts in the front panel board and for inoperative LEDs.The exerciser displays the circuit number and illuminates each LED as the control is rotated. Circuit numbers DS2016, DS2017, DS2018, DS2019, DS2024, DS2040, and DS2049 do not correspond to any LEDs on the front panel. Pressing END exits the excerciser.</td></tr>
<tr><td>EXERCISE SWITCHES</td><td>Shows the circuit number of the latest momentary-contact button pressed, or the name and position of the latest rotary switch turned. Pressing END exits the exerciser; pressing CLEAR MEAS'MT terminates the Service Program.</td></tr>
<tr><td>EXERCISE DACS</td><td>Attaches the DAC (U2302, Diagram 11) to a single sample-and-hold channel (through U2303), and outputs a sawtooth waveform to that channel. Select the channel by pressing STEP. This excerciser may be used to trace a sample-hold value through the system, with the DAC system operating in a non-multiplexed mode. Pressing END exits the exerciser.</td></tr>
<tr><td>EXERCISE PORTS</td><td>Continuously does analog-to-digital conversion on a single A-to-D port. Select the port by pressing STEP. The exerciser may be used to trace a single potentiometer wiper value or probe code value through the system by operating the A-to-D converter in a non-multiplexed mode. Pressing END exits the exerciser.</td></tr>
<tr><td>SHOW READOUT ROM HEADER</td><td>Shows the Readout ROM part number (U2408, Diagram 9) and its expected and actual checksum.</td></tr>
<tr><td>EXERCISE RO INTERFACE</td><td>Continuously echos a marching-bit value across the readout interface. This exerciser may be used to check the integrity of the Measurement-Processor-to-Readout-Processor communication system. Pressing END exits the exerciser.</td></tr>
<tr><td>SHOW SYSTEM ROM HEADER</td><td>Shows the system ROM part numbers (U2519, Diagram 8) and checksums of the installed firmware version.</td></tr>
<tr><td>EXERCISE TIME REF</td><td>Steps through the timing frequencies used to characterize the horizontal timing accuracy. Calibration periods are shown in the following table.
<table>
<tr><th>Time</th><th>Test Period</th></tr>
<tr><td>5 µs</td><td>32 µs</td></tr>
<tr><td>10 µs</td><td>64 µs</td></tr>
<tr><td>20 µs</td><td>128 µs</td></tr>
<tr><td>50 µs</td><td>256 µs</td></tr>
<tr><td>.1 ms</td><td>512 µs</td></tr>
<tr><td>.2 ms</td><td>1.024 ms</td></tr>
<tr><td>.5 ms</td><td>2.048 ms</td></tr>
<tr><td>1 ms</td><td>4.096 ms</td></tr>
<tr><td>2 ms</td><td>8.192 ms</td></tr>
<tr><td>5 ms</td><td>32.768 ms</td></tr>
</table></td></tr>
</table>

Table 6-5 (cont)
SERVICE MENU Selections

<table>
<tr><th>Menu Item</th><th>Action</th></tr>
<tr><td>SHOW AUTO RESTARTS</td><td>Shows the address being executed if a software error occurs that causes execution out of normal memory space. This is for factory use only and is of no use in field servicing of the instrument. If an AUTO RESTART is ever seen, record the address displayed and report it to a service center; the error address is cleared from memory when SHOW AUTO RESTARTS is exited.</td></tr>
<tr><td>EXERCISE SR 0</td><td>Shifts alternate zeros and ones through Shift Register 0 (U171, U172, and U173, Diagram 1). This shift register sets Attenuator and Input Coupling relay positions and Vertical Preamplifier gain settings.</td></tr>
<tr><td>EXERCISE SR 1</td><td>Shifts alternate zeros and ones through Shift Register 1 (U302 and U303, Diagram 5; U1103, Diagram 3). This shift register sets sweep speeds and auxiliary trigger settings (TV Trigger, Scope Bandwidth, X10 magnification, and X-Y Mode).</td></tr>
<tr><td>EXERCISE SR 2</td><td>Shift alternate zeros and ones through Shift Register 2 (U502, Diagram 4).</td></tr>
<tr><td>EXERCISE VOLT REF</td><td>Steps through all settings of the Voltage Reference Generator (U931, Diagram 7) that are used to calibrate the Volts Measurement system. For each setting, Channels 1 and 2 are placed into the gain configuration (2 mV through 50 mV) that uses that setting. The voltage select lines (VOLTS CAL 2-0) may be checked for activity, and the generated VOLTS CAL SIGNAL may be measured to check its values.
<table>
<tr><th>VOLTS/DIV</th><th>Cal voltage</th></tr>
<tr><td>2 mv</td><td>10 mv</td></tr>
<tr><td>5 mv</td><td>25 mv</td></tr>
<tr><td>10 mv</td><td>50 mv</td></tr>
<tr><td>20 mv</td><td>100 mv</td></tr>
<tr><td>50 mv</td><td>250 mv</td></tr>
</table></td></tr>
</table>

DIAGNOSE Tests

The complete DIAGNOSE routine may be called up by the service technician as needed to aid in troubleshooting the instrument. Testing routines and troubleshooting information for use in the event of a failed test are given in Table 6-6.

Table 6-6
DIAGNOSE ROUTINES

Error Label	Path, devices tested, and troubleshooting actions
INTERFACE ERROR	Measurement Processor to Readout Processor Communications. WROTE (hex number that was written, 2 characters). READ (hex number that was read, 2 characters). This test rotates a 1 through the byte on the bus lines. The difference between WROTE and READ indicates which bit is stuck.
	Devices to troubleshoot: U2401, U2402, U2417C and D, and bus lines between Measurement Processor and Readout Processor. Check U2501 pin 29 for enabling signal to U2402, and U2400 pin 22 for clock.
RAM ERROR	Writes and reads test bytes from the Readout RAM (U2406). ADDRESS (hex address of error location, 3 characters). WROTE (hex data written, 2 characters). READ (hex data read, 2 characters). The difference between WROTE and READ data indicates a stuck bit.
(RO RAM)	PART NUM (Tektronix Part Number without dashes). EXPECTED CHECKSUM (hex number, 2 characters). ACTUAL CHECKSUM (hex number, 2 characters). NOTE *Readout ROM is internal to the Readout Processor, U2400; a failure of this test may mean a bad Readout Processor.*

Table 6-6 (cont)
DIAGNOSE ROUTINES

Error Label	Path, devices tested, and troubleshooting actions
REG SR 2	Front Panel Potentiometer Multiplexer data path check. WROTE (hex data written, 1 character). READ (hex data read, 1 character). Device Tested: U502, Diagram 4.
	Troubleshooting checks: Check pin 11 for correct clock. Check pin 2 for data. Check pin 12 for multiplexer output.
REG SR 0	Attenuator and Preamplifier data path check. WROTE (hex data written, 6 characters). READ (hex data read,, 6 characters). Devices Tested: U171, U172, and U173 on Diagram 1. NOTE *U171 and U172 have +15 V clocks and data; U173 has +5 V clocks and data.*
	Troubleshooting checks: Check pin 3 of each device for correct clock. Check pin 9 of each device for marching bit pattern. Attenuator relay latches are driven and a clacking sound is heard.
REG SR 1	Sweeps and Auxiliary Trigger data path check. WROTE (hex data written, 6 characters). READ (hex data read, 6 characters). Devices Tested: U302 and U303 on Diagram 3; U1103 on Diagram 3. Clock and data levels for U302 and U303 are +15 V; they are +5 V for U1103.
	Troubleshooting checks: Check pin 3 of each device for correct clock. Check pin 9 of each device for marching bit pattern.

Table 6-6 (cont)
DIAGNOSE ROUTINES

Error Label	Path, devices tested, and troubleshooting actions
REG SR 3	Switch board data path check. WROTE (hex data written, 4 characters). READ (hex data read, 4 characters). NOTE *There is no exerciser for SR 3, but it is included in "DIAGNOSE."* Devices Tested: U2001 and U2002, Diagram 10.
	Troubleshooting Checks: Check pin 10 for serial data in. Check pin 9 for serial data out. Check pin 2 for clock.
DAC ERROR 0	The A-to-D system, Diagram 11, is not working correctly. Ground level was digitized out of the specified error limits.
	Devices to troubleshoot: U2515 and U2517, Diagram 8; U2306, U2302, U2300, U2313, and U2314, Diagram 11; U506, Diagram 7
(Triggers)	The trigger diagnostic partially checks the Trigger SOURCE, Trigger CPLG, and Trigger SLOPE circuitry.
	Error Messages: TIME SIGNAL TOO SMALL AT A Trigger — A Trigger circuitry failed amplitude test. TIME SIGNAL TOO SMALL AT B Trigger — B Trigger circuitry failed amplitude test. NO A Trigger FOR TIME CAL SIGNAL — (2 digit code, see table) Trigger never occurred.

Table 6-6 (cont)
DIAGNOSE ROUTINES

Error Label	Path, devices tested, and troubleshooting actions
	Time Base Cal Signal / Code 128 µs 0 8.192 ms 1 256 µs 2 4.096 ms 3 2.048 ms 4 512 µs 5 32.768 ms 6 1.024 ms 7 64 µs 13 32 µs 14 Check U421, U431, U1106A, and associated circuitry, Diagram 3. SLIC (Display Logic IC, U600) and FLIC (Trigger Logic IC, U602) gate outputs and level shifters, Diagram 4.

TROUBLESHOOTING HINTS BY DIAGRAM

Vertical SELF CAL—Checks Cursor and Preamplifier Outputs

The circuitry listed below must be operational for Vertical SELF CAL to work. Troubleshoot these circuits if voltage measurements or tracking cursors are not correct.

1. DAC system (U2303, U2304, and U2305, Diagram 11).
2. Trigger Level Comparators (U431 and U421, Diagram 3).
3. VERT COMP feedback (U702, Diagram 2).
4. ECL-to-CMOS translators (Q604, Q605, Q606, Q607, Q602, and Q603) between U600 and U602 (Diagram 4).
5. Data to Measurement Processor (data bus and bus transceivers, Diagram 8).
6. VOLTS CAL signal (U931, Diagram 7).
7. Vertical Preamps (U210, U220, U230, and U240), Delay Line Drivers (Q250, Q251, Q252, and Q253), and Vertical Position Switching circuitry (U203, U801B, U201, U202, U280, Q284 and Q285, Diagram 2).

HORIZONTAL SELF CAL—Checks Sweep Timing

1. Put the oscilloscope into Self Cal and check at U421A pin 4 (Diagram 3) for changing width calibration signals.
2. Run the "EXERCISE TIME REF" exerciser and check for correct TB CAL signal at U421A pin 4, Diagram 3 (see Table 6-5).

Schematic Diagram 1—Vertical INPUTS

1. Run DIAGNOSE to check for shift register failure.
2. Run the shift register exerciser for Shift Register 0. Check for clock, data, and strobe signals. Check the shift register outputs.

NOTE

The outputs of U171 and U172 are at 15 V; the outputs from U173 are at 5 V.

3. Check the outputs of the relay driver transistor arrays (U174 and U175). When a transistor is blown in one of the arrays, the usual symptom is 8 V on its output.

4. Go to a known setup and check the outputs for correct levels (see Circuit Description in Section 3). The MAKE FACTORY SETTINGS selection under INTERNAL SETTINGS of the SERVICE MENU provides known control states.

5. Check relay contacts.

6. Follow the signal path and check for correct signal and gains. Put in a known signal for each attenuator setting and check at the Vertical Preamplifier inputs to determine if the signal path is ok. The front panel boards and the attenuator shield have to be removed to gain access to the solder side of the Main Board.

7. Check the channel input buffer amplifier (U112 or U122) output if the vertical deflection of either channel 1 or channel 2 is defective. If the buffer amplifier output is held at −6 V or a strange sawtooth signal is present, replace that buffer amplifier.

8. Check gains and offsets of the CH 3 or CH 4 input buffers (Q131 or Q151).

Schematic Diagram 2—Vertical PREAMPLIFIERS, DELAY LINE DRIVERS and OUTPUT

Perform the following troubleshooting checks with no signal input.

1. Check both inputs of the delay line. If offset on either side, troubleshoot the offsetting side. Inputs to the bases of Q250 and Q251 should be at +7.5 V.

2. Differential voltage across the delay line should be 0 V ±0.5 V.

3. Check signal gain through the Preamplifier ICs (U210, U220, U230, and U240). Gain is 10 mV/division of input signal.

4. Check INVERT operation.

5. Check the operation of U260 if the inputs to delay line driver are not at 7.5 V. This operational amplifier is the bias stabilization circuit that compares the average dc level to +7.5 and moves the emitters (and therefore the bases) of Q250 and Q251 to return the inputs to 7.5 V.

WARNING

Vertical output transistors Q701 and Q702 run extremely hot (in excess of 100°C). Use care when probing in those areas to not touch the heat sinks or cases with bare fingers.

WARNING

The vertical output amplifier runs hot. DO NOT touch it with bare fingers.

CAUTION

The metal tab on top of the vertical output amplifier IC (U701) is NOT ground. Do not connect a ground lead to it. Doing so may cause the IC to fail and usually causes R733 from pin 14 of U701 to the −5 V supply to open.

6. Avoid moving the package or flexing the leads of R708. If the resistor pack is moved excessively, its leads may break. The resistor pack will then have to be replaced.

NOTE

The heat sinks on Q701 and Q702 may be removed for short periods of time to permit access for a test probe around the close-in circuitry. DO NOT leave them off for extended periods. Check that they are on all the way when replaced.

7. If the heat sinks on the output transistors shake loose, the plastic grommet inserted in the top of the heat sink prevents the sink from touching the metal cabinet. If the grommet is left out, then the metal cabinet may come in contact with the heat sink; and the transistor, the vertical output amplifier IC, and R733 will usually fail. If the heat sinks are removed during maintenance, they must fit tightly when replaced and the grommet must be checked.

NOTE

The cases of Q701 and Q702 are the base leads of the transistors, not the collector as is usual for a TO5 case. Also, the tab marks the collector lead, not the emitter.

8. The vertical outputs to the crt may be momentarily shorted together to check for offsets in the crt. (This should center the vertical trace.)

9. The output at pins 6 and 7 of U701 may be shorted together to check for offsets in the Vertical Preamplifier. (This should bring the trace to within +/-0.5 division of center.)

10. Pins 18 and 19 of U701 may be shorted together to check for offsets from the delay line. (This should bring the trace to within +/-1.5 divisions of center.)

11. Shorting the bases of Q701 and Q702 together usually causes the vertical output circuit to oscillate.

12. Check the center lead of R708 for a voltage of about +60 V, and a common-mode voltage difference (between the two deflection plates) of about 0 V (when pins 6 and 7 of U701 are shorted together).

13. Check the operation of Vertical Comparator U702 by noting if the TRACK MEASUREMENT cursors are off screen when called up. (The Vertical Comparator circuit is enabled only during a vertical Self Cal.)

Schematic Diagram 4—DISPLAY AND TRIGGER LOGIC AND PROCESSOR INTERFACE

1. Put the oscilloscope into A Horizontal Display mode with CH 1 and CH 2 Vertical modes on.

2. Check U600 vertical enables (CH 1 EN, pin 39; CH 2 EN, pin 38)

3. Probe U600 A TRIG selects (ATS 0, pin 31; ATS 1, pin 32; ATS 2, pin 33; A SLOPE, pin 30) and B TRIG selects (BTS 0, pin 27; BTS 1, pin 28; BTS 2, pin 29; B SLOPE, pin 26) while making trigger source and slope changes on the front panel. (Probe the A select lines for A trigger changes and the B select lines for B trigger changes.)

4. Check the 10 MHz clock at U600 pin 1 and U600 power sources. Check the 1 kHz clock at pin 2.

5. Check communication lines ($\overline{\text{SLIC RD}}$, pin 8; $\overline{\text{SLIC WR}}$, pin 3; ADDR0 through ADDR3, pins 4 through 7, respectively; and MB DATA, pin 9) for activity while making front panel trigger-mode changes.

6. Check TH0 line, pin 17. Signal should go to a logic high then low again for every new front-panel setup condition, such as changing trigger mode, vertical mode, etc.

7. Check TDI, U600, pin 10, for a CMOS-level switching signal.

8. Check TDO, U602, pin 30, for an ECL-level switching signal.

9. Check the A TRIG signal at U602 pin 7.

10. Check the A GATE signal at U602 pin 14. Vary the Holdoff control to see if the spacing between each A GATE pulse changes.

11. Check the Holdoff oscillator output at U600 pin 15. Vary the HOLDOFF control to see if the width of the oscillator pulses varies.

Schematic Diagram 5—A AND B SWEEPS AND DELAY COMPARATORS

1. Check that the baseline voltage (level that is present during holdoff after retrace) of the A and B ramp signals is -2 V. (The baseline level is referenced to the output of U309B and controlled by Q302, Q303, and Q304 for the A sweep and Q315, Q316, and Q317 for the B sweep).

2. Check the Sweep End Comparators, U316, for correct output. The sweep should end at a maximum of 2.5 V. Check the outputs (pin 15 for the A Sweep and pin 2 for the B Sweep) for about 3.8 V (the middle of ECL transitions).

3. Place the oscilloscope in delay and delta delay and check the Delay Time Comparators for correct outputs (DLY END 1 and DLY END 0).

4. Check U301 for correct switching and delay level transfer. Vary the Delay Time and the Delta Delay time and check for smooth signal change at pins 12 and 13 of U301C. If not correct, troubleshoot DAC system or front panel controls.

5. Run diagnostics to check for Shift Register 1 (U302 and U303) failure.

6. Exercise SR 1 and check switching of U307, U308, U310, and U311.

Schematic Diagram 6—HORIZONTAL OUTPUT AMPLIFIER

1. Turn off the READOUT and check the ramps for equal (but opposite) waveforms on each plate. (Run MAKE FACTORY SETTINGS under the INTERNAL SETTINGS MENU in the SERVICE MENU.)

CAUTION

DO NOT short the horizontal output leads together or to ground. This will cause the output amplifier FETs to fail.

2. The MOSFET output transistors (Q801 and Q802, left plate; Q805 and Q806, right plate) run hot. If either side is cold, it is defective.

3. If output is railed to one side or the other, check U801A and the common-mode feedback. This circuit is supposed to keep the outputs at about 70 V average to ground.

NOTE

Pins 12 and 13 of U802 may be shorted together to determine if the unbalance is before or after the horizontal preamplifier (U802). DO NOT short to ground.

4. Check the A RAMP and B RAMP input signals (A Horizontal mode for A RAMP and B Horizontal mode for B RAMP). They start at −2 V and ramp up to about +2.5 V.

5. Check the RO HORIZ input for correct waveform.

6. Check for the X AXIS input signal on pin 7 of U802 in X-Y mode (a signal must be applied to the CH 1 input).

7. Check at the junction of R855 and R854 (the common-mode bias point of Q810 and Q809) for 9.5 V.

8. Check at the junction of R846 and R852 (the common-mode source voltage of Q802 and Q805) for 15 V.

9. Check at the junction of R845 and R847 (the common-mode collector voltage of emitter followers Q803 and Q807) for 24 V.

10. Check the HD0 and HD1 signals to U802 (see Table 6-7 for display states).

11. The horizontal preamplifier, U802, runs warm to the touch, but not hot.

Table 6-7

Horizontal Display State Logic

HD0	HD1	Display
0	0	Readout
0	1	A Sweep
1	0	B Sweep
1	1	X-Y

Schematic Diagram 7—Z-AXIS, CRT, PROBE ADJUST, AND CONTROL MUX

1. Turn off the Readout (READOUT control fully CCW) and test the node between CR2703 and C2711 for correct Z-Axis waveform. Vary INTEN to check operation. (Readout signals add confusion to the waveforms.)
2. Check for correct auto-focus operation at the junction of CR2715 and the collector of Q2712. Circuit action is exactly opposite of the Z-Axis to obtain focus tracking.
3. Parts replaced in the CRT High Voltage circuit and Z-Axis are safety controlled parts. Replacements need to be exact. The power supply is capable of delivering more than 15 watts at high voltages.

Schematic Diagram 8—MEASUREMENT PROCESSOR

1. Check U2501, pin 57 for a RESET condition. Processor will be in permanent reset condition if RESET is high. Check that RESET goes high then low again at power on.
2. Check $\overline{\text{SYS RESET}}$ at U2506C pin 8.
3. Check that U2502 pin 5 is low when RESET is high. (This signal prevents random RAM writes on power up and power down when the processor is being reset.)
4. Check the 8 MHz clock (CLK 8M) at U2501 pin 56.
8. Check address decoding. Using a data analyzer or word recognizer probe, set up to recognize the address that produces a selected enabling strobe from the address decoding circuitry. Observe that the strobe is produced when the correct address is output by the Measurement Processor. The easiest way to generate most addresses during normal operation is to change a front-panel setting. See Table 6-8 for the addresses.

Table 6-8
Measurement Processor I/O Memory Map

Address range (A19 - A0) ←— Binary —→					Signal name and description	Signal source
0110	0000	0000	0XXX	XXXX	$\overline{\text{LED CATH CLK}}$ —Latches cathode data to Front-Panel LEDs.	U2501 pin 25 (Diagram 8)
0110	0000	0000	1XXX	XXXX	$\overline{\text{LED ANODE CLK}}$—Latches anode data to Front-Panel LEDs.	U2501 pin 27 (Diagram 8)
0110	0000	0001	0XXX	XXXX	$\overline{\text{RO BUF WR}}$ —Latches Readout Processor control datas.	U2501 pin 28 (Diagram 8)
0110	0000	0001	1XXX	XXXX	$\overline{\text{RO BUF RD}}$—Enables Readout RAM data onto bus D0-D7 (used for diagnostics only).	U2501 pin 29 (Diagram 8)
0110	0000	0010	0XXX	X000	$\overline{\text{DAC LSB CLK}}$ —Latches the least significant byte of data to the D-to-A Converter.	U2517 pin 14 (Diagram 8)
0110	0000	0010	0XXX	X001	$\overline{\text{DAC MSB CLK}}$ —Latches the most significant byte of data to the D-to-A Converter.	U2517 pin 14 (Diagram 8)
0110	0000	0010	0XXX	X010	$\overline{\text{POT MUX CLK}}$ —Latches channel selection code for pot multiplexer.	U2517 pin 13 (Diagram 8)
100X	XXXX	XXXX	XXXX	X000	$\overline{\text{MB CNTL WR}}$ —Write enables Processor Interface circuitry (Diagram 4).	U2518 pin 15 (Diagram 8)
100X	0000	XXXX	XXXX	X000	Sets BEAM FIND (U503 pin 7) high ON.	U503 pin 7 (Diagram 4)
100X	XXXX	XXXX	XXXX	X001	$\overline{\text{SW BD SR LOAD}}$ —Loads column data into switch board registers.	U2518 pin 14 (Diagram 8)
100X	XXXX	XXXX	XXXX	X010	$\overline{\text{SW BD SR SHIFT}}$ —Shifts data in switch board registers to the SW BD DATA signal line.	U2518 pin 13 (Diagram 8)
100X	XXXX	XXXX	XXXX	X011	$\overline{\text{SLIC WR}}$ —Write to SLIC, U600 Diagram 4.	U2518 pin 12 (Diagram 8)

Table 6-8 (cont)
Measurement Processor I/O Memory Map

Address range (A19 - A0) ←— Binary —→	Signal name and description	Signal source
100X XXXX XXXX XXXX X100	$\overline{\text{FLIC WR}}$ —Write to FLIC, U602 Diagram 4.	U2518 pin 11 (Diagram 8)
100X 0001 XXXX XXXX X000	SR 0 CLK—Clock Shift Register 0.	U606F pin 12 (Diagram 4)
100X 0010 XXXX XXXX X000	SR 1 CLK—Clock Shift Register 1.	U606B pin 4 (Diagram 4)
100X 0011 XXXX XXXX X000	Sets BEAM FIND (503 pin 7) low (OFF).	U503 pin 7 (Diagram 4)
100X 0011 XXXX XXXX X000	Sets MSEL (U602 pin 29) low (delta or long delay).	U503 pin 13 (Diagram 4)
100X 0100 XXXX XXXX X000	Sets MSEL (U602 pin 29) high reference or short delay).	U503 pin 13 (Diagram 4)
100X 0101 XXXX XXXX X000	Sets SR DATA signal line low.	U606C pin 6 (Diagram 4)
100X 0110 XXXX XXXX X000	Sets SR DATA signal line high.	U606C pin 6 (Diagram 4)
100X 0111 XXXX XXXX X000	Places SR 2 in shift mode (U502 pin 10, Diagram 4).	U2512 pin 5 (Diagram 8)
100X 1XXX XXXX XXXX X000	A places SR 2 in load mode (U502 pin 10, Diagram 4).	U2512 pin 5 (Diagram 8)
100X 1111 XXXX XXXX X011	$\overline{\text{TRIG CLK}}$ —Loads coupling data to triggers.	U600 pin 19 (Diagram 4)
1010 XXXX XXXX XXXX XXXX	Chip enable for Measurement Processor RAM (U2521 pin 20).	U2501 pin 36 (Diagram 8)

Schematic Diagram 9—READOUT SYSTEM

1. Run EXERCISE POTS (under the EXERCISER and FRONT PANEL menus) and check the digitized front panel pots for proper operation. The name of the exercised pot is displayed in the readout along with its current hexadecimal value. The value range from 00 to FF and the displayed value should change smoothly as the pot is rotated. EXERCISE POTS always displays the HORIZ POSITION pot when first called.The FOCUS and SCALE ILLUM controls are not digitized and therefore are not checked with this exerciser. Pressing END exits the exerciser.

2. Check Readout Request pulse ($\overline{\text{RO REQ}}$, U2410 pin 14).

3. Check Readout Blanking signal ($\overline{\text{RO BLANK}}$, U2410 pin 16).

4. Check activity of Readout Processor (U2400).

5. Check outputs of Vertical and Horizontal Readout DACs (U2412 and U2413, respectively).

6. Check outputs of Vertical and Horizontal Readout Mixers (U2416A and U2416B, respectively) and multiplexers (U2414 and U2415, respectively).

Schematic Diagram 10—SWITCH BOARD AND INTERFACE

1. Run the EXERCISE SWITCHES exerciser and check each of the front panel switches for correct operation. The circuit number of the latest switch pressed is displayed in the readout. Pressing END exits the exerciser; pressing CLEAR MEAS'MT terminates the Service Program.

2. Run the EXERCISE LEDS exerciser and check that each of the front panel LEDS may be turned on. The circuit number of the lighted LED is displayed in the readout. Circuit numbers DS2016, DS2017, DS2018, DS2019, DS2024, DS2040, and DS2049 do not correspond to any LEDs on the front panel. Pressing END exits the excerciser.

Schematic Diagram 11—ADC, DAC SYSTEM

1. Run EXERCISE DACS (under EXERCISER, PROC BOARD, and A TO D menus) and probe the demultiplexed outputs of U2303 (Diagram 11) and each of the sample-and-hold circuits for proper operation.

2. Run EXERCISE PORTS (under EXERCISER, PROC BOARD, and A TO D menus) and trace the signal path of any problems with the A-to-D Converter.

Schematic Diagram 12—POWER SUPPLY

WARNING

For safety reasons, an isolation transformer must be connected whenever troubleshooting is done in the Preregulator and Inverter Power Supply sections of the instrument.

1. If the fuse blows, check that Q2201 is not shorted. (If a variac is available, slowly increase the line voltage from 0 V until the voltage across C2202 is about 40 V. If the same voltage is across C2203, Q2201 is probably shorted.)

2. If the Preregulator fails to come up (44 V not present across C2203):

   a. Check +DC at the output of the line rectifier bridge (across C2202) for approximately (Vac_{RMS} X 1.414).

   b. Check the Start-up circuit. The voltage across C2204 should ramp up to about 20 V, at which point Q2204 and Q2211 turn on to supply voltage to pin 10 of U2201.

   c. Check the Preregulator circuit. Voltage pulses with a repetition rate of about 25 µs should be present on pin 8 of U2201 whenever supply voltage is present on pin 10.

3. If the power supply is in the chirp mode (continually restarting and shutting down), excessive loading of the +44 V supply is probable.

TROUBLESHOOTING MEASUREMENT ERRORS

When certain measurement malfunctions occur, the symptoms usually indicate the circuit components that may be causing the problems. Read the following text to become familiar with the terms used in describing a measurement failure problem and the setup conditions needed to determine the symptoms. Then use Table 6-9 to check for measurement malfunction symptoms and probable causes.

1. Verify all the following conditions and read the definitions before attempting to use Table 6-9 for locating the source of measurement-error problems.

Conditions:

All vertical channels can be successfully displayed and positioned independently.

The A and B sweeps both free-run and trigger successfully.

Both A and B Trigger COUPLING and SOURCE operate properly.

Normal-appearing readout text and cursors can be displayed.

Definition of terms:

Type 1 volts measurements are:

|← VOLTS→| and /|\ VOLTS→|

Type 2 volts measurements are:

DC

Type 3 volts measurements are:

+PEAK, -PEAK, PK-PK

Type 4 volts measurements are:

GATED +PEAK, GATED -PEAK, and GATED PK-PK

Measurement value accuracy is the accuracy of number displayed in top line of readout on the crt.

Measurement cursor accuracy is the accuracy of the match between cursor position and the measurement value.

Trigger value accuracy is the accuracy of the number displayed on the trigger level cursor.

Trigger cursor accuracy is the accuracy of the match between cursor position the value displayed on the cursor.

A TL is the A trigger level measurement system.

B TL is the B trigger level measurement system.

Table 6-9
Measurement Error Troubleshooting Hints

Circuit Problem	Symptoms
	VERTICAL INPUTS (schematic Diagram 1)
Ground relay stuck in signal position	Gross value problems for Types 1-4 volts measurements. Gross value problems A TL and B TL.
	Test: Use "EXERCISE VOLT REF." Check that the ground relay is in ground position.
Defective X10, X100, X1, X2, X5 Relays and Attenuators	Gross value problems for affected channel for Types 1-4 volts measurements. Gross value problems in A TL and B TL.
	Test: Check channel accuracy at all VOLTS/DIV settings.
ZERO HYST line stuck low (U173-13)	In Type 4 measurements, minor value problems for +PK cursors when gating interval is at negative end of waveform, and for -PK cursors when gating interval is at positive end of waveform.
	Test: Turn off all measurements; use the A Horizontal Mode. U431 pin 28 should be -3.0 volts. Switch to ALT Horizontal Mode. U431 pin 28 should be -0.7 volts.

Table 6-9, (cont)
Measurement Error Troubleshooting Hints

Circuit Problem	Symptoms
$\overline{\text{RO FREEZE}}$ line stuck high (U173-11)	Gross cursor problems for Types 2, 3, and 4 measurements. Gross cursor problems for A TL and B TL. Gross valve problems with Type 1 measurements.
	Test: Monitor during CH 1/CH 2 VOLTMETER menu SELF CAL. Signal line should reach TTL low.
VERTICAL PREAMP AND OUTPUT AMPLIFIER (schematic Diagram 2)	
Preamp Trig Outputs Bad	Gross value problems for Types 2, 3, and 4 measurements for affected channel.
	Test: Check B triggering on the affected channel.
Preamp Vert Outputs or Enable Bad	Gross cursor problems for Types 2, 3, and 4 measurement for affected channel. Gross value accuracy problems for Type 1 measurements for affected channel.
	Test: With only the affected channel selected for display, check that channel is shown and check gain accuracy.
VERT COMP output (U702-7)	Gross value problems with Type 1 measurements. Gross cursor problems with Types 2, 3, and 4 measurements. Gross cursor problems with A TL and B TL.
	Test: Lift W1101 and ground the base of Q703. VERT COMP should be toggling between TTL high and TTL low either with readout on or with two channels on (one at screen top, one at screen bottom).
A AND B TRIGGER SYSTEM (schematic Diagram 3)	
A Trig Source Multiplexer (U421A)	"SEARCH FAILED AT 5 μs" for "SELF CAL" on time measurements unless stuck in LINE. Minor to gross value problems (depending on which source is stuck) with the A TL measurement.
	Test: Set A Trigger SOURCE to VERT. For each channel, display only that channel and check that the signal applied to the displayed channel appears at pin 25 of U421.

Table 6-9, (cont)
Measurement Error Troubleshooting Hints

Circuit Problem	Symptoms
A Trig Cplg Multiplexer (U421B)	May get "SEARCH FAILED at . . ." for "SELF CAL" on time measurements if coupling is stuck in HF REF coupling. Minor to gross value problems with the A TL if coupling is stuck in any position except DC.
	Test: Switch between all A Trigger COUPLING settings with a 10 kHz square wave connected to CH 1 input; use CH 1 for the A Trigger SOURCE and set A Trigger SLOPE to ⌝⌞ . Check signal at U421 pin 25 (square edge for DC or NOISE REJ; rounded corner for HF REJ; spiked corner for LF REJ; signal center shifts to ground for AC).
A Trig line stuck high or low (U421C-10)	"SEARCH FAILED AT 5 μs for SELF CAL" on time measurements. Gross value problems with A TL.
	Test: Set the A Trigger mode to NORM. Check that the sweep can be triggered on the Channel 1 signal.
B Trig Source Multiplexer (U431A)	Minor to gross value problems (depending on which bit is stuck) with types 2, 3, and 4 measurements. Minor to gross value problems with B TL. "SEARCH RETURNED BAD VALUE AT . . . " on time measurements (unless stuck in LINE SOURCE).
	Test: Set B Trigger Source to VERT. For each channel, display only that channel and check that the signal applied to the displayed channel appears at U431 pin 25.
B Trig Cplg Multiplexer (U431B)	Minor to gross value problems with Types 3 and 4 measurements (depending on which coupling bit is stuck). Gross value problems with Type 2 measurements (unless stuck in measurement mode input). Minor to gross value problems with B TL.
B Trig BW Limit circuitry	Minor value problems with Type 3 and 4 measurements if stuck in limited BW position. Minor value problems with Type 2 measurements if stuck in full BW position.
BW FULL B line (U1103-14)	See notes on "B Trig BW limiter."
	Test: Should be CMOS low when SCOPE BW button is lit. Should be CMOS high when SCOPE BW button is not lit; use ALT Horizontal Mode with B CPLG set to DC.

Table 6-9, (cont)

Measurement Error Troubleshooting Hints

Circuit Problem	Symptoms
B Trig (U431C)	Gross value problems with Types 2, 3, and 4 measurements. Gross value problems with B TL. "SEARCH RETURNED BAD VALUE AT . . ." on time measurements.
B TV TRIG EN line stuck high (U1103-4)	Gross value problems with Type 2 measurements.
	Test: Run CH 1/CH 2 VOLTMETER DC measurement and check that the B TV TRIG EN signal is at TTL low.
$\overline{\text{VERT COMP EN}}$ line stuck high (U1103-7)	See notes on "VERT COMP" (schematic Diagram 2).
	Test: $\overline{\text{VERT COMP EN}}$ should be at CMOS high in normal use. Run "SELF CAL" from the CH 1/CH 2 VOLTMETER menu and check that $\overline{\text{VERT COMP EN}}$ goes to a CMOS low.
LINE/TIME BASE CAL signal Mux stuck in LINE position (U1106A)	"RETURNED BAD SEARCH VALUE AT . . ." from "SELF CAL" for time measurements.
	Test: Run "EXERCISE TIME REF" diagnostic and check the output of U1106A (pin 1) for changing signal.
DC Average circuit (U1101B	Gross value problems for Type 2 measurements (minor value problems with low frequencies if RC values in the filter are incorrect).
	Test: Display only CH 1, run DC measurement. Apply to 50 Hz sine-wave signal with a DC offset to the CH 1 input. Check that only the dc value appears at output of the DC Average circuit.
DISPLAY AND TRIGGER LOGIC AND PROCESSOR INTERFACE (schematic Diagram 4)	
MB RETURN line (U502-12)	See notes on VERT COMP (schematic Diagram 2).
MP DLY SEL line (U503-13 or MP DLY SEL Interface (U602)	"SEARCH RETURNED BAD VALUE AT 5 µs" on time measurements.
	Test: Turn all measurements off. Use the A Horizontal mode. The MP DLY SEL signal should be at a TTL high.
SR DATA line (U606C-6)	Effects are the same as those caused by malfunctions in SR 0 and SR 1.
	Test: The A Sweep rate changes when SEC/DIV knob is rotated in the A Horizontal Display Mode.
SR 0 CLK line (U606F-12)	Effects are the same as those caused by malfunctions in SR 0.
	Test: Channel 1 sensitivity changes when CH 1 VOLTS/DIV knob is rotated.

Table 6-9, (cont)
Measurement Error Troubleshooting Hints

Circuit Problem	Symptoms
SR 1 CLK line (U606B-4)	Effects same as those caused by malfunctions in SR 1.
	Test: Check that the A Sweep rate changes when SEC/DIV knob is rotated in the A Horizontal Display Mode.
SR 1 CLK TTL line (U501-13)	Effects same as those caused by malfunctions in auxiliary section of SR 1 (U1103, Diagram 3).
	Test: HF noise in trace reduces when SCOPE BW button is lit and increases when not lit.
Processor-to-Display-Sequencer Interface (U600)	Gross effects on all voltage and time measurements.
	Test: Run DIAGNOSE and note results of SLIC CONTROL REG test; Set the A Trigger Mode to NORM; check that the ATS 0-2 signal lines (pins 31-33) change when the A Trigger SOURCE is changed. Check that no "LOW REP RATE" warning occurs with Type 4 measurements.
TDO Level Shifter (U603, Q603, Q602)	Same as Processor-to-Display-Sequencer Interface problem.
	Test: Using NORM mode for both triggers, VERT source for both triggers, and CH 1 only displayed; apply a four-division, square-wave signal to the CH 1 input. In the A Horizontal mode, check that the Trig'd LED light goes off and the sweep stops running with the Trigger LEVEL control at full CW rotation. Change to AUTO mode for A trigger; check that sweep free runs with the Trigger LEVEL control at full CW rotation. Check that the Trig'd LED can be lit and the sweep can be triggered when the Trigger Level is set to within the signal limits. Keep the A Sweep triggered for the next check. In B Horizontal mode, check that the Trig'd LED goes off, and the sweep stops running with the Trigger LEVEL control set at full CW rotation. Check that the Trig'd LED can be lit and the sweep made to trigger when Trigger Level is set to within the signal limits. Change to RUNS AFTER Mode for the B Trigger. Check that the B Sweep free runs.

Table 6-9, (cont)

Measurement Error Troubleshooting Hints

Circuit Problem	Symptoms
DLY SEL line stuck low (U602-32)	"SEARCH RETURNED BAD VALUE AT 5 μs" for "SELF CAL" on time measurements. Test: Use settings given in previous test. Set the first delay zone to the start of the sweep with ⊢ control. Check that the second delay zone can be positioned over the entire sweep length with the →⊣ control.
DLY SEL line stuck high (U602-32)	"SEARCH RETURNED BAD VALUE AT 0.1 ms" for "SELF CAL" on time measurements.
	Test: Use settings given in previous test. Set the first delay zone to the start of the sweep with ⊢ control. Check that the second delay zone can be positioned over the entire sweep length with the →⊣ control.
ATS 0-2 (U600, pins 31-33) A Trig Source Multiplexer	See notes on "A Trig Source Multiplexer" (schematic Diagram 4).
BTS 0-2 (U600, pins 27-29) B Trig Source Multiplexer	See notes on "B Trig Source Multiplexer" (schematic Diagram 3).
B SLOPE line stuck high (U600-26)	Gross problems with +PEAK value, Types 2, 3, and 4 measurements. Gross value problems with the B TL measurement.
$\overline{\text{TRIG CLK}}$ line (U600-19)	See notes on "A Trig Cplg Multiplexer" and "B Trig Cplg Multiplexer" (U421 and U431, Diagram 3).
A AND B SWEEP AND DELAY COMPARATORS (schematic Diagram 5)	
DLY END 0 line stuck low or high (U315-15)	"SEARCH RETURNED BAD VALUE AT 5 μs" for "SELF CAL" on time measurements.
	Test: Run the ⊢TIME→⊣ measurement in ALT Horizontal Mode with the A SEC/DIV at 1 ms/div and the B SEC/DIV at 0.1 ms/div. Check that the first delay zone can be positioned over the length of sweep using the ⊢ control.
Ref/Delta Delay Muxes stuck (U301A & C)	See notes on DLY SEL (schematic Diagram 4).
A Sweep Control circuit (U302 & U303)	"SEARCH RETURNED BAD VALUE AT (affected SEC/DIV setting)" for "SELF CAL" on time measurements.
	Test: Use "EXERCISE VOLT REF" diagnostic.

Table 6-9, (cont)

Measurement Error Troubleshooting Hints

Circuit Problem	Symptoms
VOLT CAL 0-2 (U302 & U303)	Gross value problems with Types 1, 2, 3, and 4 measurements. Gross value and cursor problems with A TL and B TL.
	Test: Use "EXERCISE VOLT REF" diagnostic.
Z-AXIS, CRT, PROBE ADJUST, AND CONTROL MUX (schematic Diagram 7)	
VOLT CAL line (U931-3)	Gross value problems with types 1, 2, 3, and 4 measurements. Gross value and cursor problems with A TL and B TL.
	Test: Use "EXERCISE VOLT REF" diagnostic.
MEASUREMENT PROCESSOR (schematic Diagram 8)	
TB CAL line (U2501-22)	"SEARCH FAILED AT SWEEP SPEED . . ." in "SELF CAL" on time measurements.
	Test: Use "EXERCISE TIME REF" diagnostic. Check that TB CAL signal is correct and signal path is intact to U421A pin 4 (Diagram 3) through U1106A.
$\overline{\text{SLIC WR}}$ (U2518-12)	See notes on "Processor-to-Display-Sequencer Interface" (schematic Diagram 4).
$\overline{\text{SLIC RD}}$ (U2503C-8)	See notes on "Processor-to-Display-Sequencer Interface" (schematic Diagram 4).
$\overline{\text{FLIC WR}}$ (U2518-11)	See notes and tests on "TDO Level Shifter" (schematic Diagram 4).
MB DATA (U2515-11)	See notes on "Processor-to-SLIC Interface" (schematic Diagram 4).
Field & Mixer Control Latch or Readout Position Mixer stuck (U2411, U2414, U2415)	Gross cursor problems with Types 1, 2, 3, and 4 measurements. Gross cursor problems with A TL and B TL.
	Test: Run ⇤ VOLTS⇥ CURSOR Measurement mode with only CH 1 displayed. Check that cursors move the CH 1 position control. Check that ⇤ cursor moves with ⇤ control and ⇥ cursor moves with ⇥ control. Check that top and bottom line of readout do not move with any position control.

Table 6-9, (cont)

Measurement Error Troubleshooting Hints

Circuit Problem	Symptoms
	ADC, DAC SYSTEM (schematic Diagram 11)
A TRIG LVL (U2304C-8)	See notes for "A TRIG" (schematic Diagram 3).
	Test: Select A trigger, set A Trig mode to NORM. Check that A TRIG LVL can be set to any value from -2.5 to +2.5 volts using the Trigger LEVEL control.
B REF TRIG LVL (U2304B-7)	See notes for "B TRIG" (hints for schematic Diagram 3).
	Test: Select B trigger, set B Trig mode to NORM, and select B Horizontal mode. Check that B REF TRIG LVL can be set to any value from -2.5 to +2.5 volts with Trigger LEVEL pot.
REF DLY (U2305C-8)	"RETURNED BAD SEARCH VALUE AT . . ." for "SELF CAL" on time measurements.
	Test: Run ⊢TIME⊣ measurement in ALT Horizontal mode; A at 1 ms/div, B at 0.1 ms/div. Check that first delay zone can be positioned over length of sweep with the ⊢ control.
DELTA DELAY (U2305B-7)	"RETURNED BAD SEARCH VALUE AT . . ." for "SELF CAL" on on time measurements.
	Test: Use the preceding REF DELAY settings, and set first delay zone to start of sweep with ⊢ control. Check that second delay zone can be positioned over length of sweep with ⊣ control.
REF CURSOR (U2304D-14)	Gross value problems with Type 1 measurements. Gross cursor problems with Types 2, 3, and 4 measurements. Gross cursor problems with A TL and B TL.
	Test: Run ⊢ VOLTS⊣ CURSOR Measurement Mode. Check that ⊢ cursor can be positioned ±15 divisions around the trace ground.
DELTA CURSOR (U2304A-1)	Gross value problems with Type 1 measurements. Gross cursor problems with Types 2, 3, and 4 measurements. Gross cursor problems with A TL and B TL.
	Test: Run ⊢ VOLTS⊣ CURSOR Measurement Mode. Check that ⊣ cursor can be positioned ±15 divisions around the trace ground level.

CORRECTIVE MAINTENANCE

INTRODUCTION

Corrective maintenance consists of component replacement and instrument repair. This part of the manual describes special techniques and procedures that are needed to replace components in this instrument. If it is necessary to ship your instrument to a Tektronix Service Center for repair or service, refer to the Repackaging for Shipment information in this section.

MAINTENANCE PRECAUTIONS

To reduce the possibility of personal injury or instrument damage, observe the following precautions.

1. Disconnect the instrument from the ac-power source before removing or installing components.

2. Verify that the line-rectifier filter capacitors are discharged prior to performing any servicing.

3. Use care not to interconnect instrument grounds which may be at different potentials (cross grounding).

4. When soldering on circuit boards or small insulated wires, use only a 15-watt, pencil-type soldering iron.

CAUTION

Do not exceed 9 in-lb of torque when tightening the 6-32 screws.

5. Use care not to overtighten screws into chassis. Threads that have been formed directly into aluminum components can be stripped out. If this occurs, use a 6-32 nut to secure the screw.

WARNING

Portions of the power supply are floating at the ac line voltage level and pose a shock hazard if not isolated from ground.

6. Use an isolation transformer to supply power to the 2246 1Y or 2246 Mod A if you troubleshoot in power supply with power applied to the instrument.

OBTAINING REPLACEMENT PARTS

Electrical and mechanical replacement parts can be obtained through your local Tektronix Field Office or representative. However, many of the standard electronic components may usually be obtained from a local commercial source. Before purchasing or ordering a part from a source other than Tektronix, Inc., please check the Replaceable Electrical Parts list for the proper value, rating, tolerance, and description.

NOTE

The physical size and shape of a component may affect instrument performance, particularly at high frequencies. Always use direct-replacement components, unless it is known that a substitute will not degrade instrument performance. Parts in the crt high-voltage and Z-Axis circuits are safety-controlled—USE EXACT REPLACEMENTS in these circuits.

Special Parts

In addition to the standard electronic components, some special parts are used in the 2246 1Y and 2246 Mod A. These components are manufactured or selected by Tektronix, Inc. to meet specific performance requirements, or are manufactured for Tektronix, Inc. in accordance with our specifications. The various manufacturers can be identified by referring to the Cross Index-Manufacturer's Code number to Manufacturer at the beginning of the Replaceable Electrical Parts list (Section 8). Most of the mechanical parts for in this instrument are

manufactured by Tektronix, Inc. Order all special parts directly from your local Tektronix Field Office or representative.

Ordering Parts

When ordering replacement parts from Tektronix, Inc., be sure to include all of the following information:

1. Instrument type (include modification or option numbers).
2. Instrument serial number.
3. A description of the part (if electrical, include its full circuit component number).
4. Tektronix part number.

REPACKAGING FOR SHIPMENT

It is recommended that the original carton and packing material be saved in the event it is necessary for the instrument to be reshipped using a commercial transport carrier. If the original materials are unfit or not available, then repackage the instrument using the following procedure.

1. Use a corrugated cardboard shipping carton having a test strength of at least 275 pounds and with an inside dimension at least six inches greater than the instrument dimensions.
2. If instrument is being shipped to a Tektronix Service Center, enclose the following information: show the owner's address, name and phone number of a contact person, type and serial number of the instrument, reason for returning, and a complete description of the service required.
3. Completely wrap the instrument with polyethylene sheeting or equivalent to protect the outside finish and prevent entry of foreign materials into the instrument.
4. Cushion the instrument on all sides using three inches of padding material or urethane foam, tightly packed between the carton and the instrument.
5. Seal the shipping carton with an industrial stapler or strapping tape.
6. If the instrument was NOT purchased under Air Force Contract No. F41608-88-D-008, address the shipping carton to the nearest Tektronix Service Center. Please include your own return address on the shipping carton.

NOTE

Special instructions for instruments purchased under Air Force Contract No. F41608-88-D-008:

If the instrument **IS under warranty**, contact your local Tektronix Service Center for shipping instructions.

If the instrument **IS NOT under warranty**, address the shipping carton to the nearest Tektronix Service Center. Please include your own return address on the shipping carton.

MAINTENANCE AIDS

The maintenance aids listed in Table 6-10 include items required for performing most of the maintenance procedures in this instrument. Equivalent products may be substituted for the examples given, provided their characteristics are similar.

INTERCONNECTIONS

Several types of mating connectors are used for the interconnecting cable pins. The following information provides the replacement procedures for the various type connectors.

End-Lead Pin Connectors

Pin connectors used to connect the wires to the interconnect pins are factory assembled. They consist of machine-inserted pin connectors mounted in plastic holders. If the connectors are faulty, the entire wire assembly should be replaced.

Ribbon-Cable Connectors

The etch-ribbon cables have the connector pins crimped onto the wire runs. If the connectors are defective, the entire ribbon cable assembly must be replaced.

Table 6-10
Maintenance Aids

Description	Specification	Usage	Example
Soldering Iron	15 to 25 W.	General soldering and unsoldering.	Antex Precision Model C.
Torx Screwdriver Tips and Handle	Torx tips: #T7, #T9, #T10, #T15, and #T20. Handle: 1/4 inch hex drive.	Assembly and disassembly.	Tektronix Part Numbers: #T7 003-1293-00 #T9 003-0965-00 #T10 003-0814-00 #T15 003-0966-00 #T20 003-0866-00 Handles: 8 1/2 in. 003-0293-00 3 1/2 in. 003-0445-00
Nutdrivers	1/4 inch, 5/16 inch, 1/2 inch, and 9/16 inch.	Assembly and disassembly.	Xcelite #8, #10, #16 and #18.
Open-end Wrench	9/16 inch and 1/2 inch.	Channel Input and Ext Trig BNC Connectors	Tektronix Part Numbers: 9/16) 003-0502-00. 1/2) 003-0822-00
Hex Wrenches	0.050 inch, 1/16 inch.	Assembly and disassembly.	Allen wrenches.
Long-nose Pliers		Component removal and replacement.	Diamalloy Model LN55-3.
Diagonal Cutters		Component removal and replacement.	Diamalloy Model M554-3.
Vacuum Solder Extractor.	No Static Charge Retention.	Unsoldering static sensitive devices and components on multi-layer boards.	Pace Model PC-10.
Contact Cleaner	No-Noise.®	Switch and pot cleaning.	Tektronix Part Number 006-0442-02.
Pin-Replacement Kit		Replace circuit board connector pins.	Tektronix Part Number 040-0542-01.
IC-removal Tool		Removing DIP IC packages.	Augat T114-1.
Isopropyl Alcohol	Reagent grade.	Cleaning attenuator and front-panel assemblies.	2-Isopropanol.
Isolation Transformer		Isolate the instrument from the ac power source for safety.	Tektronix Part Number 006-5953-00.
1X Probe		Power supply ripple check.	TEKTRONIX P6101A

BATTERY

The 2246 1Y instruments serial numbered B714999 and below use a pair of silver-oxide cells with an life expectancy of 1 year. Above this serial number, the 2246 1Y uses a lithium battery. The 2246 Mod A uses a lithium battery.

The battery is used to supply backup power to the System RAM and should last for at least 5 years. When it becomes necessary to replace the battery, be sure to observe the following general warning about disposal of lithium batteries.

WARNING

To avoid personal injury, observe proper procedures for handling and disposal of lithium batteries. Improper handling may cause fire, explosion, or severe burns. Do not recharge, crush, disassemble, heat the battery above 212°F (100°C), incinerate, or expose contents of the battery to water. Dispose of battery in accordance with local, state, and national regulations.

Typically, small quantities (less than 20) can be safely disposed of with ordinary garbage in a sanitary landfill. Larger quantities must be sent by surface transport to a hazardous waste disposal facility. The batteries should be individually packaged to prevent shorting and packed in a sturdy container that is clearly labeled "Lithium Batteries—DO NOT OPEN."

TRANSISTORS AND INTEGRATED CIRCUITS

Transistors and integrated circuits should not be replaced unless they are actually defective. If one is removed from its socket or unsoldered from the circuit board during routine maintenance, return it to its original board location. Unnecessary replacement or transposing of semiconductor devices may affect the adjustment of the instrument. When a semiconductor is replaced, check the performance of any circuit that may be affected.

Any replacement component should be of the original type or a direct replacement. Bend component leads to fit their circuit board holes, and cut the leads to the same length as the original component. See Figure 9-2 in the Diagrams section for the semiconductor lead-configurations.

CAUTION

After replacing a power transistor, check that the collector is not shorted to the chassis before applying power to the instrument.

To remove socketed dual-in-line packaged (DIP) integrated circuits, pull slowly and evenly on both ends of the device. Avoid disengaging one end of the integrated circuit from the socket before the other, since this may damage the pins.

To remove a soldered DIP IC when it is going to be replaced, clip all the leads of the device and remove the leads from the circuit board one at a time. If the device must be removed intact for possible reinstallation, do not heat adjacent conductors consecutively. Apply heat to pins at alternate sides and ends of the IC as solder is removed. Allow a moment for the circuit board to cool before proceeding to the next pin.

SOLDERING TECHNIQUES

The reliability and accuracy of this instrument can be maintained only if proper soldering techniques are used to remove or replace parts. General soldering techniques that apply to maintenance of any precision electronic equipment should be used when working on this instrument.

WARNING

To avoid an electric-shock hazard, observe the following precautions before attempting any soldering: turn the instrument off, disconnect it from the ac power source, and wait at least three minutes for the line-rectifier filter capacitors to discharge.

Use rosin-core wire solder containing 63% tin and 37% lead. Contact your local Tektronix Field Office or representative to obtain the names of approved solder types.

When soldering on circuits boards or small insulated wires, use only a 15-watt, pencil-type soldering iron. A higher wattage soldering iron may cause etched circuit conductors to separate from the board base material and melt the insulation on small wires. Always keep the soldering-iron tip properly tinned to ensure the best heat transfer from the tip to the solder joint. Apply only enough solder to make a firm joint. After soldering, clean the area around

the solder connection with an approved flux-removing solvent (such as isopropyl alcohol) and allow it to air dry.

CAUTION

Only an experienced maintenance person, proficient in the use of vacuum-type desoldering equipment should attempt repair of any circuit board in this instrument. Many integrated circuits are static sensitive and may be damaged by solder extractors that generate static charges. Perform work involving static-sensitive devices only at a static-free work station while wearing a grounded antistatic wrist strap. Use only an antistatic vacuum-type solder extractor approved by a Tektronix Service Center.

CAUTION

Attempts to unsolder, remove, and resolder leads from the component side of a circuit board may cause damage to the reverse side of the circuit board. The following techniques should be used to replace a component on a circuit board:

1. Touch the vacuum desoldering tool tip to the lead at the solder connection. Never place the tip directly on the board; doing so may damage the board.

NOTE

Some components are difficult to remove from the circuit board due to a bend placed in the component leads during machine insertion. To make removal of machine-inserted components easier, straighten the component leads on the reverse side of the circuit board.

2. When removing a multipin component, especially an IC, do not heat adjacent pins consecutively. Apply heat to the pins at alternate sides and ends of the IC as solder is removed. Allow a moment for the circuit board to cool before proceeding to the next pin.

CAUTION

Excessive heat can cause the etched circuit conductors to separate from the circuit board. Never allow the solder extractor tip to remain at one place on the board for more than three seconds. Solder wick, spring-actuated or squeeze-bulb solder suckers, and heat blocks (for desoldering multipin components) must not be used. Damage caused by poor soldering techniques can void the instrument warranty.

3. Bend the leads of the replacement component to fit the holes in the circuit board. If the component is replaced while the board is installed in the instrument, cut the leads so they protrude only a small amount through the reverse side of the circuit board. Excess lead length may cause shorting to other conductive parts.

4. Insert the leads into the holes of the board so that the replacement component is positioned the same as the original component. Most components should be firmly seated against the circuit board.

5. Touch the soldering iron tip to the connection and apply enough solder to make a firm solder joint. Do not move the component while the solder hardens.

6. Cut off any excess lead protruding through the circuit board (if not clipped to the correct length in step 3).

7. Clean the area around the solder connection with an approved flux-removing solvent. Be careful not to remove any of the printed information from the circuit board.

REMOVAL AND REPLACEMENT INSTRUCTIONS

WARNING

To avoid electric shock, disconnect the instrument from the power input source before removing or replacing any component or assembly.

The exploded view drawings in Replaceable Mechanical Parts list may be helpful during removal

and reinstallation of individual components or sub-assemblies. Circuit board and component locations are shown in Diagrams section.

Read these instructions before attempting to remove or install any components.

Cabinet

To remove the cabinet:

1. Unplug the power cord from its rear-panel connector.
2. Place the instrument face down on a clean, flat surface.
3. Remove the Torx-head screw from the right side near the rear of the cabinet.
4. Remove the plastic rear cover, held with four Torx-head screws.
5. Slide the cabinet housing up and off the instrument.

WARNING

Potentially dangerous voltages exist at several points throughout this instrument. If it is operated with the cabinet removed, do not touch exposed connections or components. Before replacing parts or cleaning, disconnect the ac-power source from the instrument and check that the line-rectifier filter capacitors have discharged. Also, check the low voltages at the Power-Supply/Main-Board interface connector (J1204). If any of the supply-voltage or line-voltage filter capacitors remain charged for more that 20 seconds, discharge them to ground through a 1 kΩ, 5- or 6-watt resistor.

To install the cabinet:

6. Carefully slide the cabinet housing over the rear of the instrument. Be careful not to snag any of the folded ribbon cables. Make sure the cabinet housing slides between the plastic front-panel housing and the instrument chassis.
7. Install the rear-panel. Secure it with four #15 Torx-head screws.
8. Install a Torx-head screw in the right side of the cabinet.

Crt Removal and Replacement

WARNING

Use care when handling a crt. Breaking the crt can cause high-velocity scattering of glass fragments. Protective clothing and safety glasses or safety face shield should be worn. Avoid striking the crt on any object which might cause it to crack or implode. When storing a crt, either place it in a protective carton or set it face down on a smooth surface in a protected location with a soft mat under faceplate.

To remove the crt:

WARNING

To avoid electrical shock, carefully discharge the crt anode lead directly to the metal chassis. To avoid static-discharge damage to electronic components, do not allow the anode lead to discharge into the adjacent circuitry.

1. Disconnect the high-voltage anode lead. Pull the anode-lead coupler apart slowly and carefully. DO NOT touch the exposed connector pin as it is withdrawn from coupler socket. Discharge the exposed anode pin to the metal chassis only. A hole is provided in the left side of the power supply chassis for the purpose of holding the end of the lead to prevent a recharge while it is disconnected.
2. Unplug the trace rotation cable (P27) from the Main board.
3. Unplug the two vertical and the two horizontal deflection leads from the crt neck. Grasp each lead connector with long-nosed pliers and pull it straight away from the crt neck pins. Be careful not to bend the neck pins.
4. Remove the crt implosion shield and bezel frame (held with two screws at the lower side).

5. Remove rear crt shield (held in place by 3 self-tapping screws).

6. Place your left hand on crt neck shield and your right hand over crt face. Move the crt and neck shield assembly forward to unplug the crt from its socket and carefully withdraw it from the instrument, feeding the trace rotation cable and anode lead through their respective access holes in the crt front shield. Do not hold the crt assembly by the neck shield only.

7. If it is necessary remove the metal neck shield from crt. Carefully slide the shield to rear of the crt. Be careful not to damage the neck pins.

To install the crt:

8. Install the metal shield over the neck of the crt. Make sure that the plastic grommet is in place over the front of the shield. Align the neck pins with the shield holes.

9. Check that the graticule scale-illumination light pipe is in place at bottom front of crt opening. Also make sure that the four crt corner cushions are in place in the crt opening of the subpanel.

10. Carefully guide the crt, anode lead, and trace rotation cable into the instrument and through the access holes in the crt shield. Line up the crt base pins with base socket. Make sure that the ground clip above the rear of the crt shield goes outside of the shield. Hold in on the rear of the base socket with one hand and push on the face of the crt with the other hand to completely seat the crt base pins. If the crt will not go in all the way, check for bent pins. DO NOT FORCE this connection!

11. Connect the trace rotation cable (P27) to the Main board.

12. Connect the vertical and horizontal deflection leads to the crt neck pins. The horizontal deflection leads (going to bottom pins) should be crossed.

13. Connect the high-voltage anode lead.

14. Install the crt implosion shield and frame using two 7/8 in. Torx-head screws.

15. Check that the graticule illumination light bulbs are in place in the light pipe at the bottom of the crt.

16. Reinstall rear crt shield.

BNC Connectors (Vertical Inputs)

To replace BNC Connectors:

1. Remove the Main board (see Main board removal procedure).

NOTE

Do not disconnect the ends of the delay line from board as indicated in the Main board removal procedure. It is not necessary for replacing the input BNC connectors.

2. Unsolder the input lead of the defective BNC connector(s).

3. Using a 9/16 open-end wrench, remove and replace the defective BNC connector(s).

4. Resolder the input lead(s).

5. Replace the Main board (see Main board installation procedure).

A16 Processor Board

To remove the Processor board:

1. Unplug ribbon cables P2501, P2502, P2302, and P2304 from the the processor board. To aid the release of the ribbon-cable pins from connector, slide a thin-shafted, flat-bladed screwdriver between the ribbon cable (near the connector) and the etched-circuit board and pry gently upward.

2. Remove the six Torx-head attaching screws (one at each corner and two in the middle).

3. Unplug P2105 (17-pin) from the Potentiometer board and lift the Processor board out of the instrument.

To install the Processor board:

CAUTION

Do not exceed 9 in-lb of torque when tightening the 6-32 screws that hold the circuit board to the chassis. Damage to the circuit board and/or screw threads may result if the screws are overtightened.

4. Position the board to align the screw holes and install the six Torx-head attaching screws (two, 5/8 in. screws in the center and one, 7/16 in. screw at each corner).

5. Plug P2105 into the Potentiometer board.

6. Plug in ribbon cables P2501, P2502, P2302, P2304, and P2105. Press the ribbon cable pins firmly into the connector holes.

A18 Power Supply Board

To remove the Power Supply board:

1. Remove the Processor board (see Processor board removal procedure).

WARNING

To avoid electrical shock, carefully discharge the crt anode lead directly to the metal chassis. To avoid static-discharge damage to electronic components, do not allow the anode lead to discharge into the adjacent circuitry.

2. Disconnect the high-voltage anode lead. Pull the anode-lead coupler apart slowly and carefully. DO NOT touch the exposed connector pin as it is withdrawn from coupler socket. Discharge the exposed anode pin to the metal chassis only. A hole is provided in the left side of the power supply chassis for the purpose of holding the end of the lead to prevent a recharge while it is disconnected.

3. Remove the eight screws holding the power supply housing shield and remove the shield.

4. Disconnect the connectors from J2208 and J2225 and the two wires from ac-line filter. (Note the color stripes on the wires to the line filter for reinstallation.)

5. Pull the HV connector through the grommet in the power supply housing and remove the HV lead and P2208 cable from the retaining clip.

6. Set the POWER switch in the OFF (out) position.

CAUTION

The POWER switch must be in the OFF position to safely remove the shaft from the shaft of the switch in the following step. Pulling the shaft off with the POWER switch on may damage the switch shaft and spring assembly.

7. Remove the power-switch-extension shaft. Snap the extension shaft off the transitional pivot assembly, then remove the shaft by prying from the switch actuator.

8. Remove the six screws that hold down the Power Supply board.

9. Unplug the Power Supply board from the Main board interface connector. Grasp the two heat sinks near the center of the board, one with each hand, and pull up to disconnect the interface connection.

10. Lift the front of Power Supply board and withdraw the board from the power-supply housing.

To install the Power Supply board:

11. Place the Power Supply board into power-supply housing. First, guide the fuse holder into the rear panel, then lower the front end of the board until the board interface pins touch the interface connector.

12. Plug the interface pins into the interface connector. With the Power Supply board against the rear panel, pull up on the large electrolytic capacitor (near the center of the board) with one hand and push down on HV multiplier module (at front of board) with the other hand. This action tends to align the pins with the connector. At the same time you will have to move the board around slightly so that the pins will easily slide into the connector holes. DO NOT FORCE this connection, otherwise you may bend the pins.

CAUTION

Do not exceed 9 in-lb of torque when tightening the 6-32 screws that hold the circuit board to the chassis. Damage to the circuit board or screw threads may result if the screws are overtightened.

13. Secure the circuit board with six screws.

14. Install the power-switch-extension shaft. Snap the shaft onto the switch, then onto the transitional pivot assembly.

15. Insert the high-voltage lead through the power-supply-housing grommet and snap the connector shell into the clamp at the front of the power-supply housing.

16. Connect the leads to J2208, J2225, and the ac-line filter (observe the color coding noted when the filter leads were disconnected).

17. Route the HV lead and P2208 cable through the retaining clip.

18. Install the power-supply-housing shield with eight screws.

19. Connect the crt anode lead to the HV connector.

20. Install the Processor board (see Processor board installation instructions).

Potentiometer/Switch board Assembly

To remove the Potentiometer/Switch board assembly:

1. Unplug ribbon-cable connector P2501 from the Processor board and unplug ribbon-cable connector P2105 from the Potentiometer board.

2. Remove the CH 1 and CH 2 VOLTS/DIV VAR knobs and the SEC/DIV VAR knob. (A 1/16 in. hexagonal wrench is needed for the set screws).

3. Pull out all the remaining front-panel knobs to the right of the crt. Grasp the knobs firmly and pull straight out from the front panel.

4. Pull out on the four captive plastic snap fasteners on the back of the switch board that hold the Switch board assembly to the front panel (not those that hold the Potentiometer board to the Switch board). Use long-nose pliers as necessary to reach the fasteners.

5. Unclip the high-voltage connector from the front of the power-supply housing. Remove the plastic retaining clip from the housing (it is pressed in). Move the high-voltage connector to the top of the power-supply housing to make room for removing the Potentiometer/Switch board.

6. Move the Potentiometer/Switch board assembly back away from the front panel and lift it out of the instrument.

To separate the A12 Potentiometer board from the Switch board:

7. Pull out on the three snap fasteners that hold the Potentiometer board to the Switch board.

8. Separate the Potentiometer board from the Switch board.

9. If necessary, unplug the VAR control shafts from their potentiometers.

To install the Potentiometer board:

10. Set the three snap fasteners on the board in the released (out) position.

11. Plug the three VAR control shafts onto the VAR potentiometers.

12. Set the Potentiometer board in place over the Switch board and press in on the snap fasteners.

To install the Potentiometer/Switch board assembly:

13. Set the four snap fasteners (on the Switch board) in the released (out) position.

14. Guide the Potentiometer/Switch board assembly into place behind the front panel and press in on the snap fasteners.

15. Install the control knobs. Push knobs in while rotating slightly until they align with the shaft and snap in place. The two knobs without a position-indicator rib go on the ⇤ and ⇥ control shafts.

16. Install the three VAR control knobs, using 1/16 in. allen wrench. Make sure that VAR controls are in the detent (fully CW) position, then rotate the knobs so that the VAR label is horizontal before tightening the set screws.

17. Install the high-voltage connector clip to the front side of the power-supply housing and snap the connector shell into it.

18. Connect ribbon cable J2105 to the Potentiometer board and P2501 to the Processor board. Position the connector pins in the socket holes and push them fully into place.

A10 Main Board

NOTE

This procedure is intended for the complete replacement of the Main board. All repairs and component replacements (except BNC connectors) can be done without completely removing the Main board. When replacing BNC connectors, use the BNC Connector replacement procedure previously given in this section.

To remove the Main board:

1. Remove the crt (see crt removal procedure).
2. Pull out and remove the five crt-display control knobs.
3. Remove the Processor board (see Processor board removal procedure).
4. Remove the shield from the power-supply housing (held with eight screws).
5. Unplug the three-wire cable from J2208 on the Power Supply board. Pull the cable and connector through the plastic grommet.
6. Release the crt socket from its holder on the rear panel. Push the socket out the rear enough to turn it sideways and push it through to the inside of the instrument.
7. Remove the Potentiometer/Switch board assembly (see Potentiometer/Switch board assembly removal procedure).
8. Remove the top and bottom attenuator shields. The bottom shield is held with 5 screws and the top shield is held with one remaining screw. See Figure 6-4.

NOTE

If the Main board is being removed to replace or repair a component (such as a BNC connector), it is not necessary to disconnect the delay line from the board as indicated in the following step.

9. Unsolder the main delay-line wires from both sides of board (see Figures 6-4 and 6-5).
10. Unclip the delay line from both sides of the board and from the two clips at the lower side of the rear panel. Remove the two clips from the rear panel.
11. Remove the ten screws that hold the Main board to the chassis. Back out the three screws going through the rear panel enough to allow removal of Main board. See Figure 6-4.
12. Pull the three ribbon cables through to the bottom of the instrument.
13. Lift the back of main board enough to disconnect interface connection between Main board and Power Supply board.
14. Slide the Main board back away from front panel to completely remove the board from the instrument.

To install the Main board:

15. Guide the BNC connectors at front of the Main board into the holes in the front panel. Make sure that you guide the PROBE ADJUST jack into the front panel as well as the BNC connectors.
16. Lower the rear of Main board while guiding the interface connector onto the power supply interface pins. DO NOT FORCE this connection; the pins may bend. Make sure that the grommet holding the crt and power supply wires is in place between the board and the rear panel.

CAUTION

Do not exceed 9 in-lb of torque when tightening the 6-32 screws that hold the circuit board to the chassis. Damage to the circuit board or screw threads may result if the screws are overtightened.

17. Secure the Main board with ten screws. See Figure 6-4.
18. Solder both ends of delay line to Main board. Be sure to observe the polarity of the leads. See Figures 6-4 and 6-5. Press the ends of delay line into the clips on board.
19. Snap the two plastic clips into the lower edge of the rear panel and snap the delay line into them.

20. Connect the three-wire cable from the crt-socket cable assembly to J2208 on the Power Supply board, making sure it is routed through the clip in the power-supply housing.

21. Install the shield on the power-supply housing (eight screws).

22. Install the inside attenuator shield (secure with one screw). Then install the outside attenuator shield (secure with five screws).

23. Install the Potentiometer/Switch board assembly (see Potentiometer/Switch board assembly installation procedure).

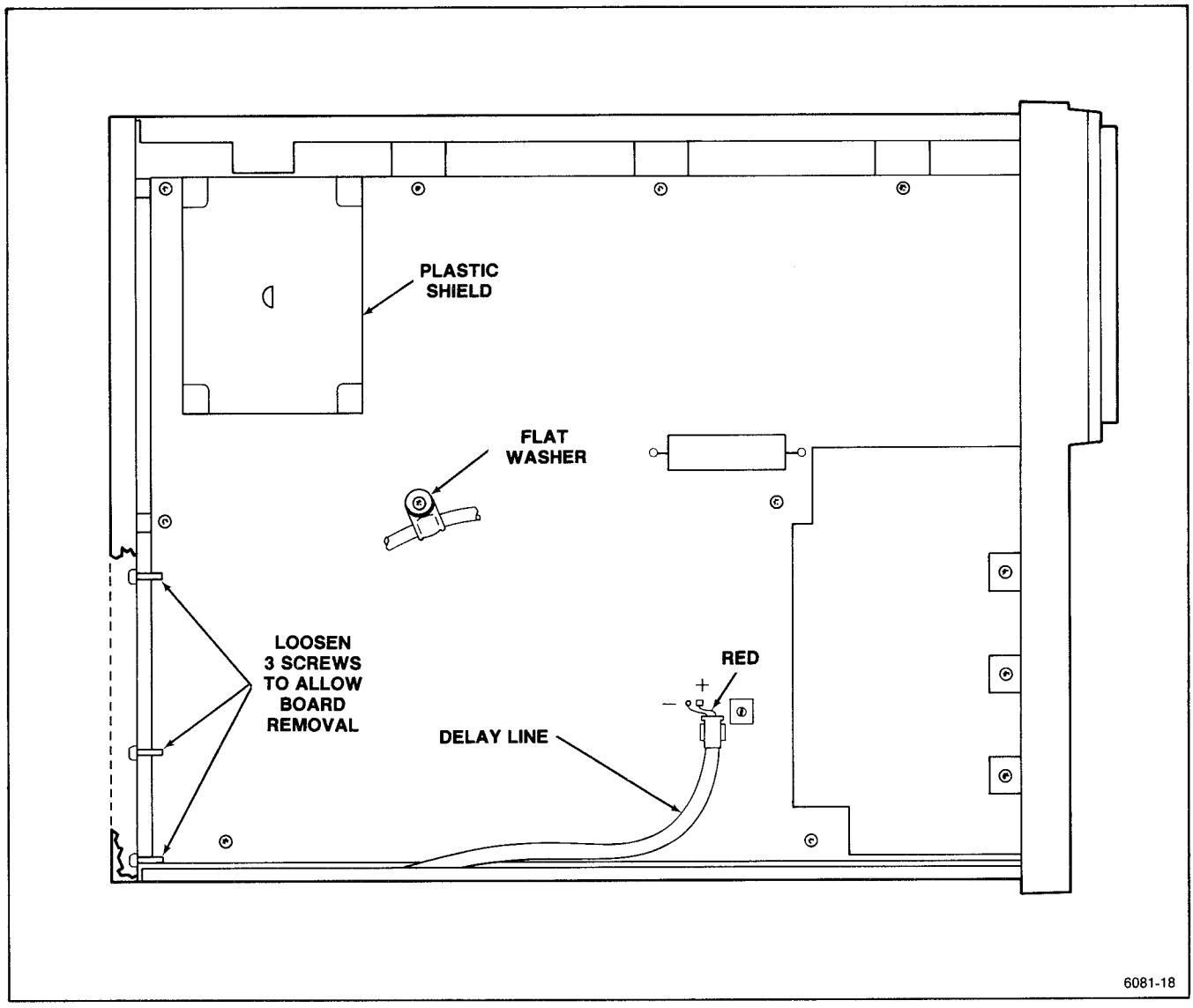

Figure 6-4. Main board removal.

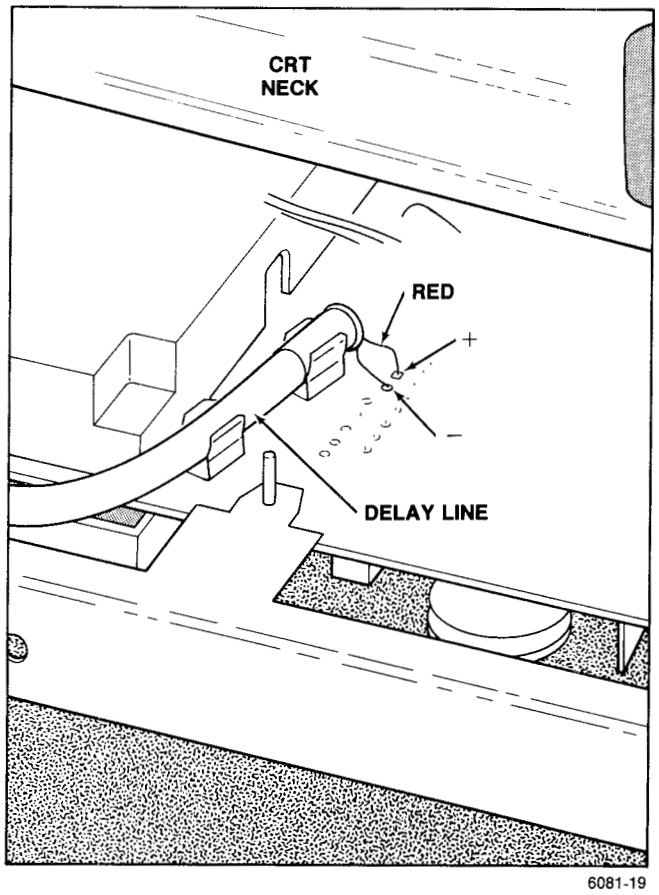

Figure 6-5. Delay-line connections to top of Main board.

24. Install the Processor board.

25. Dress the two ribbon cables to the top of the instrument. Connect them to the Processor and Potentiometer boards.

26. Install the crt socket. Turn the socket sideways and push it through the crt-socket holder in the rear panel.

27. Install the crt (see crt installation procedure).

OPTIONS

INTRODUCTION

This section contains a general description of the instrument options and accessories available at the time of publication of this manual. Additional information about instrument options and other accessories can be obtained either by consulting the current Tektronix Product Catalog or by contacting your local Tektronix Field Office or representative.

INTERNATIONAL POWER CORDS

Instruments are shipped with the detachable power-cord option ordered by the customer. Descriptive information about the international power-cord options is provided in Section 2 "Preparation for Use." The following list describes the power cords available for the 2246 1Y and 2246 Mod A.

Standard	U. S. 120 V, 60 Hz, 74 in.
Option A1	Universal Euro 220 V, 50 Hz, 2.5 m
Option A2	UK 240 V, 50 Hz, 2.5 m
Option A3	Australian 240 V, 50 Hz, 2.5 m
Option A4	North American 240 V, 60 Hz, 2.5 m
Option A5	Switzerland 220 V, 50 Hz, 2.5 m

OPTION 1R RACKMOUNTED INSTRUMENT

When the 2246 1Y or 2246 Mod A Portable Oscilloscope is ordered with Option 1R, it is shipped in a configuration that permits easy installation into a 19-inch-wide equipment rack. Also, an optional rackmounting kit may be ordered to convert the standard 2246 1Y or 2246 Mod A to a rackmounted instrument. Installation instructions for rackmounting are provided in the documentation supplied with the rackmounting kit and the 1R Option.

REPLACEABLE ELECTRICAL PARTS

PARTS ORDERING INFORMATION

Replacement parts are available from or through your local Tektronix, Inc. Field Office or representative.

Changes to Tektronix instruments are sometimes made to accommodate improved components as they become available, and to give you the benefit of the latest circuit improvements developed in our engineering department. It is therefore important, when ordering parts, to include the following information in your order: Part number, instrument type or number, serial number, and modification number if applicable.

If a part you have ordered has been replaced with a new or improved part, your local Tektronix, Inc. Field Office or representative will contact you concerning any change in part number.

Change information, if any, is located at the rear of this manual.

LIST OF ASSEMBLIES

A list of assemblies can be found at the beginning of the Electrical Parts List. The assemblies are listed in numerical order. When the complete component number of a part is known, this list will identify the assembly in which the part is located.

CROSS INDEX-MFR. CODE NUMBER TO MANUFACTURER

The Mfr. Code Number to Manufacturer index for the Electrical Parts List is located immediately after this page. The Cross Index provides codes, names and addresses of manufacturers of components listed in the Electrical Parts List.

ABBREVIATIONS

Abbreviations conform to American National Standard Y1.1.

COMPONENT NUMBER (column one of the Electrical Parts List)

A numbering method has been used to identify assemblies, subassemblies and parts. Examples of this numbering method and typical expansions are illustrated by the following:

Example a.

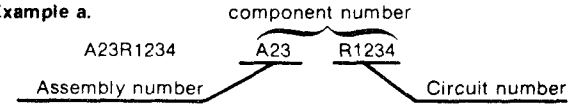

Read: Resistor 1234 of Assembly 23

Example b.

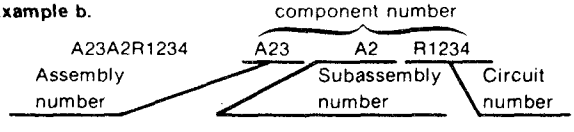

Read: Resistor 1234 of Subassembly 2 of Assembly 23

Only the circuit number will appear on the diagrams and circuit board illustrations. Each diagram and circuit board illustration is clearly marked with the assembly number. Assembly numbers are also marked on the mechanical exploded views located in the Mechanical Parts List. The component number is obtained by adding the assembly number prefix to the circuit number.

The Electrical Parts List is divided and arranged by assemblies in numerical sequence (e.g., assembly A1 with its subassemblies and parts, precedes assembly A2 with its subassemblies and parts).

Chassis-mounted parts have no assembly number prefix and are located at the end of the Electrical Parts List.

TEKTRONIX PART NO. (column two of the Electrical Parts List)

Indicates part number to be used when ordering replacement part from Tektronix.

SERIAL/MODEL NO. (columns three and four of the Electrical Parts List)

Column three (3) indicates the serial number at which the part was first used. Column four (4) indicates the serial number at which the part was removed. No serial number entered indicates part is good for all serial numbers.

NAME & DESCRIPTION (column five of the Electrical Parts List)

In the Parts List, an Item Name is separated from the description by a colon (:). Because of space limitations, an Item Name may sometimes appear as incomplete. For further Item Name identification, the U.S. Federal Cataloging Handbook H6-1 can be utilized where possible.

MFR. CODE (column six of the Electrical Parts List)

Indicates the code number of the actual manufacturer of the part. (Code to name and address cross reference can be found immediately after this page.)

MFR. PART NUMBER (column seven of the Electrical Parts List)

Indicates actual manufacturers part number.

CROSS INDEX – MFR. CODE NUMBER TO MANUFACTURER

Mfr. Code	Manufacturer	Address	City, State, Zip Code
D5243	ROEDERSTEIN E SPEZIALFABRIK FUER KONDENSATOREN GMBN	LUDMILLASTRASSE 23-25	8300 LANDSHUT GERMANY
S0482	SONY CONSUMER ELECTRONICS		TOKYO JAPAN
S3774	OSHINO ELECTRIC LAMP WORKS LTD	5 2 MINAMI SHINAGAWA 2 CHORE SHINAGAWA KU	TOKYO JAPAN
S4307	SCHAFFNER ELECTRONIK AG		LUTERBACH SWITZERLAND
TK0IH	SUNONWEALTH ELECTRIC MACHINE IND CO LTD #149, YI YUNG RD, LING TA DISTRICT,	KAOHSIUNG, TAIWAN, R.O.C. P O BOX 1436	KAOHSIUNG, TAIWAN, R.O.C.
TK0032	POWELL ELECTRONICS	411 FAIRCHILD DR	MT VIEW CA 94040
TK0161	WYLE LABORATORIES ELECTRONICS MARKETING GROUP LOS ANGELES DIV	124 MARYLAND ST	EL SEGUNDO CA 90245-4115
TK0213	TOPTRON CORP		TOKYO JAPAN
TK0515	EVOX-RIFA INC	100 TRI-STATE INTERNATIONAL SUITE 290	LINCOLNSHIRE IL 60015
TK1441	GFS MANUFACTURING INC	6 PROGRESS DR PO BOX 1409	DOVER NH 03820
TK1689	AROMAT CORP	10400 N TANTAU AVE	CUPERTINO CA 95014-0708
TK1727	PHILIPS NEDERLAND BV AFD ELONCO	POSTBUS 90050	5600 PB EINDHOVEN THE NETHERLANDS
TK1743	UNITRODE (UK) LTD	6 CRESSWELL PARK BLACKHEATH	LONDON SE 3 9RD ENGLAND
TK1913	WIMA THE INTER-TECHNICAL GROUP IND	ONE BRIDGE ST PO BOX 23	IRVINGTON NY 10533
TK1935	ACCRA FAB INC	11007 NE 37TH CIRCLE	VANCOUVER WA 98682
TK2058	TDK CORPORATION OF AMERICA	2254 N FIRST ST	SAN JOSE CA 95131
TK2073	TOCOS AMERICA INC	565 W GULF ROAD	ARLINGTON HEIGHTS IL 60005
TK2172	WYLE LABORATORIES (DIST)	5250 NE ELAM YOUNG PARKWAY SUITE 600	HILLSBORO OR 97124
TK2190	VARTA BATTERIES INC	300 EXECUTIVE BLVD	ELMSFORD NY 10523-1202
0DWW6	MICRO POWER ELECTRONICS	7973 SW CIRRUS DRIVE BLDG. #22	BEAVERTON OR 97005
0JR03	ZMAN AND ASSOCIATES	7633 S 180th	KENT WA 98032
0JR04	TOSHIBA AMERICA INC ELECTRONICS COMPONENTS DIV BUSINESS SECTOR	2692 DOW AVE	TUSTIN CA 92680
0J7N9	MCX INC	30608 SAN ANTONIO ST	HAYWARD CA 94544
00779	AMP INC	2800 FULLING MILL PO BOX 3608	HARRISBURG PA 17105
01121	ALLEN-BRADLEY CO	1201 S 2ND ST	MILWAUKEE WI 53204-2410
01295	TEXAS INSTRUMENTS INC SEMICONDUCTOR GROUP	13500 N CENTRAL EXPY PO BOX 655012	DALLAS TX 75265
01884	SPRAGUE ELECTRIC CO DEARBORN ELECTRONICS DIV	PO BOX 1076	LONGWOOD FL 32750-1076
04222	AVX CERAMICS DIV OF AVX CORP	19TH AVE SOUTH P O BOX 867	MYRTLE BEACH SC 29577

CROSS INDEX – MFR. CODE NUMBER TO MANUFACTURER

Mfr. Code	Manufacturer	Address	City, State, Zip Code
04713	MOTOROLA INC SEMICONDUCTOR PRODUCTS SECTOR	5005 E MCDOWELL RD	PHOENIX AZ 85008-4229
05828	GENERAL INSTRUMENT CORP GOVERNMENT SYSTEMS DIV	600 W JOHN ST	HICKSVILLE NY 11802
09922	BURNDY CORP	RICHARDS AVE	NORWALK CT 06852
1W344	UNITED CHEMI-CON INC	9801 W HIGGINS SUITE 430	ROSEMONT IL 60018-4704
11236	CTS CORP BERNE DIV THICK FILM PRODUCTS GROUP	406 PARR ROAD	BERNE IN 46711-9506
12697	CLAROSTAT MFG CO INC	LOWER WASHINGTON ST	DOVER NH 03820
12969	UNITRODE CORP	5 FORBES RD	LEXINGTON MA 02173-7305
14193	CAL-R INC	1601 OLYMPIC BLVD PO BOX 1397	SANTA MONICA CA 90406
14552	MICROSEMI CORP	2830 S FAIRVIEW ST	SANTA ANA CA 92704-5948
14604	ELMWOOD SENSORS INC SUB OF FASCO INDUSTRIES INC	500 NARRAGANSETT PARK DR PO BOX 2325	PAWTUCKET RI 02861-4325
14936	GENERAL INSTRUMENT CORP DISCRETE SEMI CONDUCTOR DIV	600 W JOHN ST	HICKSVILLE NY 11802
15454	KETEMA RODAN DIVISION	2900 BLUE STAR STREET	ANAHEIM CA 92806-2591
16299	AVX CORPORATION	3900 ELECTRONICS DR	RALEIGH NC 27604-1620
18324	SIGNETICS CORP MILITARY PRODUCTS DIV	4130 S MARKET COURT	SACRAMENTO CA 95834-1222
19701	PHILIPS COMPONENTS DISCRETE PRODUCTS DIV RESISTIVE PRODUCTS FACILITY AIRPORT ROAD	PO BOX 760	MINERAL WELLS TX 76067-0760
2D532	ALLEGRO MICROSYSTEMS INC SEMICONDUCTOR DIVISION	70 PEMBROKE ROAD	CONCORD NH 03301
24165	SPRAGUE ELECTRIC CO	267 LOWELL ROAD	HUDSON NH 03051
24355	ANALOG DEVICES INC	RT 1 INDUSTRIAL PK PO BOX 9106	NORWOOD MA 02062
24546	CORNING GLASS WORKS	550 HIGH ST	BRADFORD PA 16701-3737
24931	SPECIALTY CONNECTOR CO INC	2100 EARLYWOOD DR PO BOX 547	FRANKLIN IN 46131
27014	NATIONAL SEMICONDUCTOR CORP	2900 SEMICONDUCTOR DR	SANTA CLARA CA 95051-0606
27264	MOLEX INC	2222 WELLINGTON COURT	LISLE IL 60532-1613
31433	KEMET ELECTRONICS CORP NATIONAL SALES HEADQUARTERS	PO BOX 5928	GREENVILLE SC 29606
31918	ITT SCHADOW INC	8081 WALLACE RD	EDEN PRAIRIE MN 55344-2224
32997	BOURNS INC TRIMPOT DIV	1200 COLUMBIA AVE	RIVERSIDE CA 92507-2114
34335	ADVANCED MICRO DEVICES	901 THOMPSON PL	SUNNYVALE CA 94086-4518
34371	HARRIS CORP HARRIS SEMICONDUCTOR PRODUCTS GROUP	200 PALM BAY BLVD PO BOX 883	MELBOURNE FL 32919
50088	SGS-THOMSON MICROELECTRONICS INC	1310 ELECTRONICS DR	CARROLLTON TX 75006-6905

CROSS INDEX – MFR. CODE NUMBER TO MANUFACTURER

Mfr. Code	Manufacturer	Address	City, State, Zip Code
50101	FREQUENCY SOURCES INC SEMICONDUCTOR DIV SUB OF LORAL CORP	16 MAPLE RD	CHELMSFORD MA 01824-3737
50434	HEWLETT-PACKARD CO OPTOELECTRONICS DIV	370 W TRIMBLE RD	SAN JOSE CA 95131
51406	MURATA ERIE NORTH AMERICA INC HEADQUARTERS AND GEORGIA OPERATIONS	2200 LAKE PARK DR	SMYRNA GA 30080
51642	CENTRE ENGINEERING INC	2820 E COLLEGE AVE	STATE COLLEGE PA 16801-7515
52763	STETCO INC	3344 SCHIERHORN	FRANKLIN PARK IL 60131
52769	SPRAGUE-GOODMAN ELECTRONICS INC	134 FULTON AVE	GARDEN CITY PARK NY 11040-5352
53387	MINNESOTA MINING MFG CO	PO BOX 2963	AUSTIN TX 78769-2963
54583	TDK ELECTRONICS CORP	12 HARBOR PARK DR	PORT WASHINGTON NY 11550
54937	DEYOUNG MANUFACTURING INC	12920 NE 125TH WAY	KIRKLAND WA 98034-7716
55680	NICHICON /AMERICA/ CORP	927 E STATE PKY	SCHAUMBURG IL 60195-4526
56845	DALE ELECTRONICS INC	2300 RIVERSIDE BLVD PO BOX 74	NORFOLK NE 68701-2242
57668	ROHM CORP	8 WHATNEY PO BOX 19515	IRVINE CA 92713
59640	SUPERTEX INC	1225 BORDER BY DESCOX 19515	SUNNYVALE CA 94086
61058	MATSUSHITA ELECTRIC CORP OF AMERICA PANASONIC INDUSTRIAL CO DIV	ONE PANASONIC WAY PO BOX 1502	SECAUCUS NJ 07094-2917
61529	AROMAT CORP	250 SHEFFIELD ST	MOUNTAINSIDE NJ 07092-2303
65786	CYPRESS SEMICONDUCTOR CORP	3901 N 1ST ST	SAN JOSE CA 95134-1506
66302	VLSI TECHNOLOGY INC	1109 MCKAY DR	SAN JOSE CA 95131-1706
71400	BUSSMANN DIV OF COOPER INDUSTRIES INC	114 OLD STATE RD PO BOX 14460	ST LOUIS MO 63178
71590	CRL COMPONENTS INC	HWY 20 W PO BOX 858	FORT DODGE IA 50501
75042	IRC ELECTRONIC COMPONENTS PHILADELPHIA DIV TRW FIXED RESISTORS	401 N BROAD ST	PHILADELPHIA PA 19108-1001
75498	MULTICOMP INC	3005 SW 154TH TERRACE #3	BEAVERTON OR 97006
80009	TEKTRONIX INC	14150 SW KARL BRAUN DR PO BOX 500	BEAVERTON OR 97077-0001
84411	AMERICAN SHIZUKI CORP OGALLALA OPERATIONS	301 WEST O ST	OGALLALA NE 69153-1844
91637	DALE ELECTRONICS INC	2064 12TH AVE PO BOX 609	COLUMBUS NE 68601-3632

Component Number	Tektronix Part No.	Serial No. Effective	Dscont	Name & Description	Mfr. Code	Mfr. Part No.
A8	670-9783-01			CIRCUIT BD ASSY:CRT CONTROL	80009	670978301
A9	671-0978-00	B700100	B710099	CIRCUIT BD ASSY:2 MILLIVOLT BANDWIDTH (2246 1Y)	80009	671097800
A9	671-0978-00	B100100	B110099	CIRCUIT BD ASSY:2 MILLIVOLT BANDWIDTH (2246 MOD A,2Y)	80009	671097800
A10	671-0875-00	B700100	B710099	CIRCUIT BD ASSY:MAIN (2246 1Y)	80009	671087500
A10	671-0875-01	B710100	B710629	CIRCUIT BD ASSY:MAIN (2246 1Y)	80009	671087501
A10	671-0875-02	B710630	B714999	CIRCUIT BD ASSY:A10 MAIN (2246 1Y)	80009	671087502
A10	671-0875-03	B715000		CIRCUIT BD ASSY:A10 MAIN (2246 1Y)	80009	671087503
A10	671-0875-00	B100100	B110099	CIRCUIT BD ASSY:MAIN (2246 MOD A,2Y)	80009	671087500
A10	671-0875-01	B110100	B111185	CIRCUIT BD ASSY:MAIN (2246 MOD A,2Y)	80009	671087501
A10	671-0875-02	B111186	B119999	CIRCUIT BD ASSY:A10 MAIN (2246 MOD A,2Y)	80009	671087502
A10	671-0875-03	B120000		CIRCUIT BD ASSY:A10 MAIN (2246 MOD A,2Y)	80009	671087503
A12	670-9402-01			CIRCUIT BD ASSY:POTENTIOMETER	80009	670940201
A14	670-9399-01			CIRCUIT BD ASSY:SWITCH	80009	670939901
A16	672-1306-00	B700100	B711092	CIRCUIT BD ASSY:PROCESSOR (2246 1Y) (WITH U2519 FIRMWARE)	80009	672130600
A16	672-1306-01	B711093		CIRCUIT BD ASSY:PROCESSOR,671-1086-XX WIRED (2246 1Y) (WITH U2519 FIRMWARE)	80009	672130601
A16	672-0254-00	B100100	B113797	CIRCUIT BD ASSY: PROCESSOR (2246 MOD A,2Y) (WITH U2519 FIRMWARE)	80009	672025400
A16	672-0254-01	B113798		CIRCUIT BD ASSY:PROCESSOR,671-1239-XX WIRED (2246 MOD A,2Y) (WITH U2519 FIRMWARE)	80009	672025401
A16A1	671-1086-00	B700100	B711092	CIRCUIT BD ASSY:PROCESSOR (2246 1Y) (WITHOUT U2519 FIRMWARE)	80009	671108600
A16A1	671-1086-01	B711093		CIRCUIT BD ASSY:A16 PROCESSOR (2246 1Y) (WITHOUT U2519 FIRMWARE)	80009	671108601
A16A1	671-0947-00	B100100	B101981	CIRCUIT BD ASSY:PROCESSOR (2246 MOD A,2Y) (WITHOUT U2519 FIRMWARE)	80009	671094700
A16A1	671-1239-00	B101982	B113797	CIRCUIT BD ASSY:PROCESSOR (2246 MOD A,2Y) (WITHOUT U2519 FIRMWARE)	80009	671123900
A16A1	671-1239-01	B113798		CIRCUIT BD ASSY PROCESSOR (2246 MOD A,2Y) (WITHOUT U2519 FIRMWARE)	80009	671123901
A18	670-9398-04			CIRCUIT BD ASSY:LV POWER SUPPLY	80009	670939804

Component Number	Tektronix Part No.	Serial No. Effective	Dscont	Name & Description	Mfr. Code	Mfr. Part No.
A8	670-9783-01			CIRCUIT BD ASSY:CRT CONTROL	80009	670978301
A8R901	311-2344-00			RES,VAR,NONWW:CKT BD,4.7K OHM,20%,1.25WLINE AR	71590	BA17140001
A8R902	311-2344-00			RES,VAR,NONWW:CKT BD,4.7K OHM,20%,1.25WLINE AR	71590	BA17140001
A8R903	311-2344-00			RES,VAR,NONWW:CKT BD,4.7K OHM,20%,1.25WLINE AR	71590	BA17140001
A8R905	311-2344-00			RES,VAR,NONWW:CKT BD,4.7K OHM,20%,1.25WLINE AR	71590	BA17140001
A8W900	131-4038-00			CONN,HDR::PCB,:MALE,RTANG,1 X 8,0.1 CTR,0.295 MLG X 0.140 TAIL,TIN	00779	640453-8

Component Number	Tektronix Part No.	Serial No. Effective	Serial No. Dscont	Name & Description	Mfr. Code	Mfr. Part No.
A9	671-0978-00	B700100	B710099	CIRCUIT BD ASSY:2 MILLIVOLT BANDWIDTH (2246 1Y)	80009	671097800
A9	671-0978-00	B100100	B110099	CIRCUIT BD ASSY:2 MILLIVOLT BANDWIDTH (2246 MOD A,2Y)	80009	671097800
A9C185	281-0810-00	B100100	B110099	CAP,FXD,CER DI:5.6PF,+/-0.5PF,100VTUBULAR,MI (2246 MOD A,2Y)	04222	SA102A5R6DAA
A9C185	281-0810-00	B700100	B710099	CAP,FXD,CER DI:5.6PF,+/-0.5PF,100VTUBULAR,MI (2246 1Y)	04222	SA102A5R6DAA
A9C186	281-0810-00	B100100	B110099	CAP,FXD,CER DI:5.6PF,+/-0.5PF,100VTUBULAR,MI (2246 MOD A,2Y)	04222	SA102A5R6DAA
A9C186	281-0810-00	B700100	B710099	CAP,FXD,CER DI:5.6PF,+/-0.5PF,100VTUBULAR,MI (2246 1Y)	04222	SA102A5R6DAA
A9C188	281-0909-00	B100100	B110099	CAP,FXD,CER DI:0.022UF,20%,50V (2246 MOD A,2Y)	04222	SA105C223MAA
A9C188	281-0909-00	B700100	B710099	CAP,FXD,CER DI:0.022UF,20%,50V (2246 1Y)	04222	SA105C223MAA
A9Q181	151-0712-00	B100100	B110099	TRANSISTOR,SIG:BIPOLAR,PNP;20V,50MA,600MHZ AMPLIFIER (2246 MOD A,2Y)	04713	MPSH81
A9Q181	151-0712-00	B700100	B710099	TRANSISTOR,SIG:BIPOLAR,PNP;20V,50MA,600MHZ AMPLIFIER (2246 1Y)	04713	MPSH81
A9Q182	151-0712-00	B100100	B110099	TRANSISTOR,SIG:BIPOLAR,PNP;20V,50MA,600MHZ AMPLIFIER (2246 MOD A,2Y)	04713	MPSH81
A9Q182	151-0712-00	B700100	B710099	TRANSISTOR,SIG:BIPOLAR,PNP;20V,50MA,600MHZ AMPLIFIER (2246 1Y)	04713	MPSH81
A9R185	313-1512-00	B100100	B110099	RES,FXD,FILM:5.1K OHM,5%,0.2W (2246 MOD A,2Y)	91637	CCF50-2-51000J
A9R185	313-1512-00	B700100	B710099	RES,FXD,FILM:5.1K OHM,5%,0.2W (2246 1Y)	91637	CCF50-2-51000J
A9R188	313-1512-00	B100100	B110099	RES,FXD,FILM:5.1K OHM,5%,0.2W (2246 MOD A,2Y)	91637	CCF50-2-51000J
A9R188	313-1512-00	B700100	B710099	RES,FXD,FILM:5.1K OHM,5%,0.2W (2246 1Y)	91637	CCF50-2-51000J
A9R189	313-1271-00	B100100	B110099	RES,FXD,FILM:270 OHM,5%,0.2W (2246 MOD A,2Y)	91637	CCF50-2-270R0J
A9R189	313-1271-00	B700100	B710099	RES,FXD,FILM:270 OHM,5%,0.2W (2246 1Y)	91637	CCF50-2-270R0J
A9VR101	152-0278-00	B100100	B110099	DIODE,ZENER:,;3V,5%,0.4W (2246 MOD A,2Y)	04713	1N4372ARL
A9VR101	152-0278-00	B700100	B710099	DIODE,ZENER:,;3V,5%,0.4W (2246 1Y)	04713	1N4372ARL
A9W105	131-0566-00	B100100	B110099	BUS,CONDUCTOR:DUMMY RES,0.094 OD X 0.225L (2246 MOD A,2Y)	24546	OMA 07
A9W105	131-0566-00	B700100	B110099	BUS,CONDUCTOR:DUMMY RES,0.094 OD X 0.225L (2246 1Y)	24546	OMA 07
A9W106	131-0566-00	B100100	B110099	BUS,CONDUCTOR:DUMMY RES,0.094 OD X 0.225L (2246 MOD A,2Y)	24546	OMA 07
A9W106	131-0566-00	B700100	B710099	BUS,CONDUCTOR:DUMMY RES,0.094 OD X 0.225L (2246 1Y)	24546	OMA 07
A9W107	131-0566-00	B100100	B110099	BUS,CONDUCTOR:DUMMY RES,0.094 OD X 0.225L (2246 MOD A,2Y)	24546	OMA 07

Component Number	Tektronix Part No.	Serial No. Effective	Dscont	Name & Description	Mfr. Code	Mfr. Part No.
A9W107	131-0566-00	B700100	B710099	BUS,CONDUCTOR:DUMMY RES,0.094 OD X 0.225L (2246 1Y)	24546	OMA 07
A9W108	131-0566-00	B100100	B110099	BUS,CONDUCTOR:DUMMY RES,0.094 OD X 0.225L (2246 MOD A,2Y)	24546	OMA 07
A9W108	131-0566-00	B700100	B710099	BUS,CONDUCTOR:DUMMY RES,0.094 OD X 0.225L (2246 1Y)	24546	OMA 07
A9W212	195-0970-00	B100100	B110099	LEAD,ELECTRICAL:26 AWG,3.0 L,0-N (2246 MOD A,2Y)	80009	195097000
A9W212	195-0970-00	B700100	B710099	LEAD,ELECTRICAL:26 AWG,3.0 L,0-N (2246 1Y)	80009	195097000
A9W222	195-0970-00	B100100	B110099	LEAD,ELECTRICAL:26 AWG,3.0 L,0-N (2246 MOD A,2Y)	80009	195097000
A9W222	195-0970-00	B700100	B710099	LEAD,ELECTRICAL:26 AWG,3.0 L,0-N (2246 1Y)	80009	195097000

This scan is not authorized to be sold on eBay by other than it's creator. If you bought this scanned manual on eBay from any other than aa4df, then the vendor you bought it from is a thief who sold you stolen property. Please file a complaint with eBay and demand a refund.

Component Number	Tektronix Part No.	Serial No. Effective	Serial No. Dscont	Name & Description	Mfr. Code	Mfr. Part No.
A10	671-0875-00	B700100	B710099	CIRCUIT BD ASSY:MAIN (2246 1Y)	80009	671087500
A10	671-0875-01	B710100	B710629	CIRCUIT BD ASSY:MAIN (2246 1Y)	80009	671087501
A10	671-0875-02	B710630	B714999	CIRCUIT BD ASSY:A10 MAIN (2246 1Y)	80009	671087502
A10	671-0875-03	B715000		CIRCUIT BD ASSY:A10 MAIN (2246 1Y)	80009	671087503
A10	671-0875-00	B100100	B110099	CIRCUIT BD ASSY:MAIN (2246 MOD A,2Y)	80009	671087500
A10	671-0875-01	B110100	B111185	CIRCUIT BD ASSY:MAIN (2246 MOD A,2Y)	80009	671087501
A10	671-0875-02	B111186	B119999	CIRCUIT BD ASSY:A10 MAIN (2246 MOD A,2Y)	80009	671087502
A10	671-0875-03	B120000		CIRCUIT BD ASSY:A10 MAIN (2246 MOD A,2Y)	80009	671087503
A10AT117	307-2135-00	B100100	B101582	RES NTWK,FXD,FI:ATTENUATOR DIP PKG (2246 MOD A,2Y)	80009	307213500
A10AT117	307-2135-01	B101583	B113045	ATTENUATOR:1M OHM ATTENUATOR NETWORK (2246 MOD A, 2Y)	80009	307213501
A10AT117	307-2135-02	B113046	B114266	ATTENUATOR:1M OHM ATTENUATOR NETWORK (2246 MOD A,2Y)	80009	307213502
A10AT117	307-2135-03	B114267		ATTENUATOR:1M OHM ATTENUATOR NETWORK (2246 MOD A,2Y)	80009	307213503
A10AT117	307-2135-00	B700100	B700493	RES NTWK,FXD,FI:ATTENUATOR DIP PKG (2246 1Y)	80009	307213500
A10AT117	307-2135-01	B700494	B711016	ATTENUATOR:1M OHM ATTENUATOR NETWORK (2246 1Y)	80009	307213501
A10AT117	307-2135-02	B711017	B711094	ATTENUATOR:1M OHM ATTENUATOR NETWORK (2246 1Y)	80009	307213502
A10AT117	307-2135-03	B711095		ATTENUATOR:1M OHM ATTENUATOR NETWORK (2246 1Y)	80009	307213503
A10AT127	307-2135-00	B100100	B101582	RES NTWK,FXD,FI:ATTENUATOR DIP PKG (2246 MOD A,2Y)	80009	307213500
A10AT127	307-2135-01	B101583	B113045	ATTENUATOR:1M OHM ATTENUATOR NETWORK (2246 MOD A,2Y)	80009	307213501
A10AT127	307-2135-02	B113046	B114266	ATTENUATOR:1M OHM ATTENUATOR NETWORK (2246 MOD A,2Y)	80009	307213502
A10AT127	307-2135-03	B114267		ATTENUATOR:1M OHM ATTENUATOR NETWORK (2246 MOD A,2Y)	80009	307213503
A10AT127	307-2135-00	B700100	B700493	RES NTWK,FXD,FI:ATTENUATOR DIP PKG (2246 1Y)	80009	307213500
A10AT127	307-2135-01	B700494	B711016	ATTENUATOR:1M OHM ATTENUATOR NETWORK (2246 1Y)	80009	307213501
A10AT127	307-2135-02	B711017	B711094	ATTENUATOR:1M OHM ATTENUATOR NETWORK (2246 1Y)	80009	307213502
A10AT127	307-2135-03	B711095		ATTENUATOR:1M OHM ATTENUATOR NETWORK (2246 1Y)	80009	307213503
A10C101	281-0909-00			CAP,FXD,CER DI:0.022UF,20%,50V	04222	SA105C223MAA
A10C102	281-0909-00			CAP,FXD,CER DI:0.022UF,20%,50V	04222	SA105C223MAA
A10C103	281-0909-00			CAP,FXD,CER DI:0.022UF,20%,50V	04222	SA105C223MAA
A10C104	281-0909-00			CAP,FXD,CER DI:0.022UF,20%,50V	04222	SA105C223MAA
A10C105	281-0909-00			CAP,FXD,CER DI:0.022UF,20%,50V	04222	SA105C223MAA
A10C106	281-0909-00			CAP,FXD,CER DI:0.022UF,20%,50V	04222	SA105C223MAA

Component Number	Tektronix Part No.	Serial No. Effective	Dscont	Name & Description	Mfr. Code	Mfr. Part No.
A10C107	281-0909-00			CAP,FXD,CER DI:0.022UF,20%,50V	04222	SA105C223MAA
A10C108	281-0909-00			CAP,FXD,CER DI:0.022UF,20%,50V	04222	SA105C223MAA
A10C111	281-0909-00			CAP,FXD,CER DI:0.022UF,20%,50V	04222	SA105C223MAA
A10C112	283-0414-01			CAP,FXD,CER DI:0.022UF,20%,500V	04222	SR217C223MAATR
A10C113	281-0909-00			CAP,FXD,CER DI:0.022UF,20%,50V	04222	SA105C223MAA
A10C114	281-0214-00			CAP,VAR,CER DI:0.6-3PF,400V	52763	313613-140
A10C121	281-0909-00			CAP,FXD,CER DI:0.022UF,20%,50V	04222	SA105C223MAA
A10C122	283-0414-01			CAP,FXD,CER DI:0.022UF,20%,500V	04222	SR217C223MAATR
A10C123	281-0909-00			CAP,FXD,CER DI:0.022UF,20%,50V	04222	SA105C223MAA
A10C124	281-0214-00			CAP,VAR,CER DI:0.6-3PF,400V	52763	313613-140
A10C125	281-0770-00			CAP,FXD,CER DI:1000PF,20%,100V	04222	SA101C102MAA
A10C126	281-0770-00			CAP,FXD,CER DI:1000PF,20%,100V	04222	SA101C102MAA
A10C131	281-0909-00			CAP,FXD,CER DI:0.022UF,20%,50V	04222	SA105C223MAA
A10C132	281-0938-00			CAP,FXD,CER DI:20PF,2%,500V	04222	MA107A200GAA
A10C133	281-0799-00			CAP,FXD,CER DI:62PF,2%,100V	04222	SA101A620GAA
A10C134	281-0306-00			CAP,VAR,CER DI:3.3-20PF	52769	GKU 18000
A10C135	281-0909-00			CAP,FXD,CER DI:0.022UF,20%,50V	04222	SA105C223MAA
A10C136	281-0909-00			CAP,FXD,CER DI:0.022UF,20%,50V	04222	SA105C223MAA
A10C137	281-0797-00			CAP,FXD,CER DI:15PF,10%,100V,,TUBULAR,MI	04222	SA106A150KAA
A10C138	281-0315-00			CAP,VAR,CER DI:2.8-10PF	52769	GKU 10000
A10C139	281-0797-00			CAP,FXD,CER DI:15PF,10%,100V,,TUBULAR,MI	04222	SA106A150KAA
A10C140	290-0974-01			CAP,FXD,ELCTLT:10UF,20%,50V	1W344	KMC5OVB1ORM5X11
A10C151	281-0909-00			CAP,FXD,CER DI:0.022UF,20%,50V	04222	SA105C223MAA
A10C152	281-0938-00			CAP,FXD,CER DI:20PF,2%,500V	04222	MA107A200GAA
A10C153	281-0799-00			CAP,FXD,CER DI:62PF,2%,100V	04222	SA101A620GAA
A10C154	281-0306-00			CAP,VAR,CER DI:3.3-20PF	52769	GKU 18000
A10C155	281-0909-00			CAP,FXD,CER DI:0.022UF,20%,50V	04222	SA105C223MAA
A10C156	281-0909-00			CAP,FXD,CER DI:0.022UF,20%,50V	04222	SA105C223MAA
A10C157	281-0797-00			CAP,FXD,CER DI:15PF,10%,100V,,TUBULAR,MI	04222	SA106A150KAA
A10C158	281-0315-00			CAP,VAR,CER DI:2.8-10PF	52769	GKU 10000
A10C159	281-0797-00			CAP,FXD,CER DI:15PF,10%,100V,,TUBULAR,MI	04222	SA106A150KAA
A10C171	290-0974-01			CAP,FXD,ELCTLT:10UF,20%,50V	1W344	KMC5OVB1ORM5X11
A10C172	281-0909-00			CAP,FXD,CER DI:0.022UF,20%,50V	04222	SA105C223MAA
A10C173	281-0772-00			CAP,FXD,CER DI:4700PF,10%,100V	04222	SA101C472KAA
A10C180	290-0944-01			CAP,FXD,ELCTLT:220UF,20%,10V	1W344	UMC10VB221M8X11
A10C181	290-0944-01			CAP,FXD,ELCTLT:220UF,20%,10V	1W344	UMC10VB221M8X11
A10C185	281-0810-00	B110100		CAP,FXD,CER DI:5.6PF,+/-0.5PF,100VTUBULAR,MI (2246 MOD A,2Y)	04222	SA102A5R6DAA
A10C185	281-0810-00	B710100		CAP,FXD,CER DI:5.6PF,+/-0.5PF,100VTUBULAR,MI (2246 1Y)	04222	SA102A5R6DAA
A10C186	281-0810-00	B110100		CAP,FXD,CER DI:5.6PF,+/-0.5PF,100VTUBULAR,MI (2246 MOD A,2Y)	04222	SA102A5R6DAA
A10C186	281-0810-00	B710100		CAP,FXD,CER DI:5.6PF,+/-0.5PF,100VTUBULAR,MI (2246 1Y)	04222	SA102A5R6DAA

Component Number	Tektronix Part No.	Serial No. Effective	Dscont	Name & Description	Mfr. Code	Mfr. Part No.
A10C188	281-0909-00	B110100		CAP,FXD,CER DI:0.022UF,20%,50V (2246 MOD A,2Y)	04222	SA105C223MAA
A10C188	281-0909-00	B710100		CAP,FXD,CER DI:0.022UF,20%,50V (2246 1Y)	04222	SA105C223MAA
A10C190	281-0797-00			CAP,FXD,CER DI:15PF,10%,100V,,TUBULAR,MI	04222	SA106A150KAA
A10C191	281-0797-00			CAP,FXD,CER DI:15PF,10%,100V,,TUBULAR,MI	04222	SA106A150KAA
A10C201	290-0974-01			CAP,FXD,ELCTLT:10UF,20%,50V	1W344	KMC5OVB1ORM5X11
A10C202	290-0974-01			CAP,FXD,ELCTLT:10UF,20%,50V	1W344	KMC5OVB1ORM5X11
A10C203	290-0974-01			CAP,FXD,ELCTLT:10UF,20%,50V	1W344	KMC5OVB1ORM5X11
A10C204	290-0974-01			CAP,FXD,ELCTLT:10UF,20%,50V	1W344	KMC5OVB1ORM5X11
A10C205	281-0909-00			CAP,FXD,CER DI:0.022UF,20%,50V	04222	SA105C223MAA
A10C206	281-0909-00			CAP,FXD,CER DI:0.022UF,20%,50V	04222	SA105C223MAA
A10C210	281-0909-00			CAP,FXD,CER DI:0.022UF,20%,50V	04222	SA105C223MAA
A10C211	281-0759-00			CAP,FXD,CER DI:22PF,10%,100V	04222	SA101A220KAA
A10C212	281-0909-00			CAP,FXD,CER DI:0.022UF,20%,50V	04222	SA105C223MAA
A10C213	281-0909-00			CAP,FXD,CER DI:0.022UF,20%,50V	04222	SA105C223MAA
A10C214	281-0909-00			CAP,FXD,CER DI:0.022UF,20%,50V	04222	SA105C223MAA
A10C215	290-0974-01			CAP,FXD,ELCTLT:10UF,20%,50V	1W344	KMC5OVB1ORM5X11
A10C216	281-0909-00	B100100	B113468	CAP,FXD,CER DI:0.022UF,20%,50V (2246 MOD A,2Y)	04222	SA105C223MAA
A10C216	281-0775-01	B113469		CAP,FXD,CER DI:0.1UF,20%,50V (2246 MOD A,2Y)	04222	SA105E104MAA
A10C216	281-0909-00	B700100	B711092	CAP,FXD,CER DI:0.022UF,20%,50V (2246 1Y)	04222	SA105C223MAA
A10C216	281-0775-01	B711093		CAP,FXD,CER DI:0.1UF,20%,50V (2246 1Y)	04222	SA105E104MAA
A10C217	281-0909-00	B100100	B113468	CAP,FXD,CER DI:0.022UF,20%,50V (2246 MOD A,2Y)	04222	SA105C223MAA
A10C217	281-0775-01	B113469		CAP,FXD,CER DI:0.1UF,20%,50V (2246 MOD A,2Y)	04222	SA105E104MAA
A10C217	281-0909-00	B700100	B711092	CAP,FXD,CER DI:0.022UF,20%,50V (2246 1Y)	04222	SA105C223MAA
A10C217	281-0775-01	B711093		CAP,FXD,CER DI:0.1UF,20%,50V (2246 1Y)	04222	SA105E104MAA
A10C218	281-0775-01			CAP,FXD,CER DI:0.1UF,20%,50V	04222	SA105E104MAA
A10C219	281-0909-00			CAP,FXD,CER DI:0.022UF,20%,50V	04222	SA105C223MAA
A10C220	281-0909-00			CAP,FXD,CER DI:0.022UF,20%,50V	04222	SA105C223MAA
A10C221	281-0759-00			CAP,FXD,CER DI:22PF,10%,100V	04222	SA101A220KAA
A10C222	281-0909-00			CAP,FXD,CER DI:0.022UF,20%,50V	04222	SA105C223MAA
A10C223	281-0909-00			CAP,FXD,CER DI:0.022UF,20%,50V	04222	SA105C223MAA
A10C224	281-0909-00			CAP,FXD,CER DI:0.022UF,20%,50V	04222	SA105C223MAA
A10C225	290-0974-01			CAP,FXD,ELCTLT:10UF,20%,50V	1W344	KMC5OVB1ORM5X11
A10C228	281-0775-01			CAP,FXD,CER DI:0.1UF,20%,50V	04222	SA105E104MAA
A10C229	281-0909-00			CAP,FXD,CER DI:0.022UF,20%,50V	04222	SA105C223MAA
A10C232	281-0909-00			CAP,FXD,CER DI:0.022UF,20%,50V	04222	SA105C223MAA

Component Number	Tektronix Part No.	Serial No. Effective	Serial No. Dscont	Name & Description	Mfr. Code	Mfr. Part No.
A10C233	281-0909-00			CAP,FXD,CER DI:0.022UF,20%,50V	04222	SA105C223MAA
A10C234	281-0909-00			CAP,FXD,CER DI:0.022UF,20%,50V	04222	SA105C223MAA
A10C235	290-0974-01			CAP,FXD,ELCTLT:10UF,20%,50V	1W344	KMC5OVB1ORM5X11
A10C238	281-0775-01			CAP,FXD,CER DI:0.1UF,20%,50V	04222	SA105E104MAA
A10C239	281-0909-00			CAP,FXD,CER DI:0.022UF,20%,50V	04222	SA105C223MAA
A10C242	281-0909-00			CAP,FXD,CER DI:0.022UF,20%,50V	04222	SA105C223MAA
A10C243	281-0909-00			CAP,FXD,CER DI:0.022UF,20%,50V	04222	SA105C223MAA
A10C244	281-0909-00			CAP,FXD,CER DI:0.022UF,20%,50V	04222	SA105C223MAA
A10C245	290-0974-01			CAP,FXD,ELCTLT:10UF,20%,50V	1W344	KMC5OVB1ORM5X11
A10C248	281-0775-01			CAP,FXD,CER DI:0.1UF,20%,50V	04222	SA105E104MAA
A10C249	281-0909-00			CAP,FXD,CER DI:0.022UF,20%,50V	04222	SA105C223MAA
A10C258	290-0974-01			CAP,FXD,ELCTLT:10UF,20%,50V	1W344	KMC5OVB1ORM5X11
A10C265	281-0909-00			CAP,FXD,CER DI:0.022UF,20%,50V	04222	SA105C223MAA
A10C268	281-0770-00			CAP,FXD,CER DI:1000PF,20%,100V	04222	SA101C102MAA
A10C271	281-0798-00			CAP,FXD,CER DI:51PF,1%,100V	TK1743	CGB510GEN
A10C272	281-0819-00			CAP,FXD,CER DI:33 PF,5%,50V	04222	SA102A330JAA
A10C273	281-0307-00			CAP,VAR,CER DI:3-8-25PF	52769	GKU 25000
A10C274	281-0305-00	B100100	B101874	CAP,VAR,CER DI:1.5-4.0PF (2246 MOD A,2Y)	52769	GKU 4R000
A10C274	281-0305-00	B700100	B700723	CAP,VAR,CER DI:1.5-4.0PF (2246 1Y)	52769	GKU 4R000
A10C275	281-0872-00	B100100	B101874	CAP,FXD,CER DI:91PF,5%,100V (2246 MOD A,2Y)	04222	MC101A910J
A10C275	281-0776-00	B101875		CAP,FXD,CER DI:120PF,5%,100V (2246 MOD A,2Y)	04222	SA102A121JAA
A10C275	281-0872-00	B700100	B700723	CAP,FXD,CER DI:91PF,5%,100V (2246 1Y)	04222	MC101A910J
A10C275	281-0776-00	B700724		CAP,FXD,CER DI:120PF,5%,100V (2246 1Y)	04222	SA102A121JAA
A10C282	281-0909-00			CAP,FXD,CER DI:0.022UF,20%,50V	04222	SA105C223MAA
A10C283	281-0909-00			CAP,FXD,CER DI:0.022UF,20%,50V	04222	SA105C223MAA
A10C297	281-0909-00			CAP,FXD,CER DI:0.022UF,20%,50V	04222	SA105C223MAA
A10C298	281-0909-00			CAP,FXD,CER DI:0.022UF,20%,50V	04222	SA105C223MAA
A10C301	281-0909-00			CAP,FXD,CER DI:0.022UF,20%,50V	04222	SA105C223MAA
A10C302	281-0770-00			CAP,FXD,CER DI:1000PF,20%,100V	04222	SA101C102MAA
A10C303	290-0183-00			CAP,FXD,ELCTLT:1UF,10%,35V	31433	T322B105K035AS
A10C304	281-0909-00			CAP,FXD,CER DI:0.022UF,20%,50V	04222	SA105C223MAA
A10C305	290-0183-00			CAP,FXD,ELCTLT:1UF,10%,35V	31433	T322B105K035AS
A10C306	290-0183-00			CAP,FXD,ELCTLT:1UF,10%,35V	31433	T322B105K035AS
A10C307	295-0198-00			CAP SET,MATCHED:(1),10.0UF,1.5%,25V/(1)0.1UF,1.5%,35V/(1)0.0099UF,1.5%,50V (LOCATIONS A,B,C)	75498	ORDER BY DESC
A10C308	281-0909-00			CAP,FXD,CER DI:0.022UF,20%,50V	04222	SA105C223MAA
A10C309	281-0909-00			CAP,FXD,CER DI:0.022UF,20%,50V	04222	SA105C223MAA
A10C310	281-0909-00			CAP,FXD,CER DI:0.022UF,20%,50V	04222	SA105C223MAA
A10C311	281-0798-00			CAP,FXD,CER DI:51PF,1%,100V	TK1743	CGB510GEN
A10C312	281-0909-00			CAP,FXD,CER DI:0.022UF,20%,50V	04222	SA105C223MAA

Component Number	Tektronix Part No.	Serial No. Effective	Serial No. Dscont	Name & Description	Mfr. Code	Mfr. Part No.
A10C313	281-0909-00			CAP,FXD,CER DI:0.022UF,20%,50V	04222	SA105C223MAA
A10C314	281-0307-00			CAP,VAR,CER DI:3-8-25PF	52769	GKU 25000
A10C315	281-0798-00			CAP,FXD,CER DI:51PF,1%,100V	TK1743	CGB510GEN
A10C316	281-0909-00			CAP,FXD,CER DI:0.022UF,20%,50V	04222	SA105C223MAA
A10C317	281-0909-00			CAP,FXD,CER DI:0.022UF,20%,50V	04222	SA105C223MAA
A10C318	281-0909-00			CAP,FXD,CER DI:0.022UF,20%,50V	04222	SA105C223MAA
A10C319	281-0909-00			CAP,FXD,CER DI:0.022UF,20%,50V	04222	SA105C223MAA
A10C320	281-0909-00			CAP,FXD,CER DI:0.022UF,20%,50V	04222	SA105C223MAA
A10C321	281-0798-00			CAP,FXD,CER DI:51PF,1%,100V	TK1743	CGB510GEN
A10C322	281-0909-00	B110100		CAP,FXD,CER DI:0.022UF,20%,50V (2246 MOD A,2Y)	04222	SA105C223MAA
A10C322	281-0909-00	B710100		CAP,FXD,CER DI:0.022UF,20%,50V (2246 1Y)	04222	SA105C223MAA
A10C326	281-0909-00			CAP,FXD,CER DI:0.022UF,20%,50V	04222	SA105C223MAA
A10C329	281-0307-00			CAP,VAR,CER DI:3-8-25PF	52769	GKU 25000
A10C330	281-0799-00			CAP,FXD,CER DI:62PF,2%,100V	04222	SA101A620GAA
A10C337	281-0909-00			CAP,FXD,CER DI:0.022UF,20%,50V	04222	SA105C223MAA
A10C338	281-0909-00			CAP,FXD,CER DI:0.022UF,20%,50V	04222	SA105C223MAA
A10C339	281-0909-00			CAP,FXD,CER DI:0.022UF,20%,50V	04222	SA105C223MAA
A10C351	281-0909-00			CAP,FXD,CER DI:0.022UF,20%,50V	04222	SA105C223MAA
A10C421	281-0775-01			CAP,FXD,CER DI:0.1UF,20%,50V	04222	SA105E104MAA
A10C422	281-0861-00			CAP,FXD,CER DI:270PF,5%,50V	04222	SA101A271JAA
A10C423	281-0864-00			CAP,FXD,CER DI:430PF,5%,100V	04222	SA101A431JAA
A10C424	290-0183-00			CAP,FXD,ELCTLT:1UF,10%,35V	31433	T322B105K035AS
A10C425	281-0820-00	B700100	B710290	CAP,FXD,CER DI:680 PF,10%,50V (2246 1Y)	04222	SA101C681KAA
A10C425	281-0861-00	B710291	B714999	CAP,FXD,CER DI:270PF,5%,50V (2246 1Y)	04222	SA101A271JAA
A10C425	283-0196-00	B715000		CAP,FXD,CER DI:270PF,10%,50V (2246 1Y)	16299	SR155C271KAA
A10C425	281-0820-00	B100100	B110637	CAP,FXD,CER DI:680 PF,10%,50V (2246 MOD A,2Y)	04222	SA101C681KAA
A10C425	281-0861-00	B110638	B119999	CAP,FXD,CER DI:270PF,5%,50V (2246 MOD A,2Y)	04222	SA101A271JAA
A10C425	283-0196-00	B120000		CAP,FXD,CER DI:270PF,10%,50V (2246 MOD A,2Y)	16299	SR155C271KAA
A10C426	281-0864-00			CAP,FXD,CER DI:430PF,5%,100V	04222	SA101A431JAA
A10C432	281-0767-00			CAP,FXD,CER DI:330PF,20%,100V	04222	SA102C331MAA
A10C442	281-0909-00	B110100		CAP,FXD,CER DI:0.022UF,20%,50V (2246 MOD A,2Y)	04222	SA105C223MAA
A10C442	281-0909-00	B710100		CAP,FXD,CER DI:0.022UF,20%,50V (2246 1Y)	04222	SA105C223MAA
A10C444	281-0765-00			CAP,FXD,CER DI:100PF,5%,100V	04222	SA102A101JAA
A10C445	290-0183-00			CAP,FXD,ELCTLT:1UF,10%,35V	31433	T322B105K035AS
A10C447	281-0765-00			CAP,FXD,CER DI:100PF,5%,100V	04222	SA102A101JAA

Component Number	Tektronix Part No.	Serial No. Effective	Serial No. Dscont	Name & Description	Mfr. Code	Mfr. Part No.
A10C451	281-0775-01			CAP,FXD,CER DI:0.1UF,20%,50V	04222	SA105E104MAA
A10C452	281-0861-00			CAP,FXD,CER DI:270PF,5%,50V	04222	SA101A271JAA
A10C453	281-0864-00			CAP,FXD,CER DI:430PF,5%,100V	04222	SA101A431JAA
A10C454	290-0183-00			CAP,FXD,ELCTLT:1UF,10%,35V	31433	T322B105K035AS
A10C455	281-0820-00	B700100	B710290	CAP,FXD,CER DI:680 PF,10%,50V (2246 1Y)	04222	SA101C681KAA
A10C455	281-0861-00	B710291		CAP,FXD,CER DI:270PF,5%,50V (2246 1Y)	04222	SA101A271JAA
A10C455	281-0820-00	B100100	B110637	CAP,FXD,CER DI:680 PF,10%,50V (2246 MOD A,2Y)	04222	SA101C681KAA
A10C455	281-0861-00	B110638		CAP,FXD,CER DI:270PF,5%,50V (2246 MOD A,2Y)	04222	SA101A271JAA
A10C462	281-0864-00			CAP,FXD,CER DI:430PF,5%,100V	04222	SA101A431JAA
A10C463	281-0813-00			CAP,FXD,CER DI:0.047UF,20%,50V	04222	SA105E473MAA
A10C474	281-0776-00			CAP,FXD,CER DI:120PF,5%,100V	04222	SA102A121JAA
A10C475	290-0183-00			CAP,FXD,ELCTLT:1UF,10%,35V	31433	T322B105K035AS
A10C476	281-0819-00	B110100		CAP,FXD,CER DI:33 PF,5%,50V (2246 MOD A,2Y)	04222	SA102A330JAA
A10C476	281-0819-00	B710100		CAP,FXD,CER DI:33 PF,5%,50V (2246 1Y)	04222	SA102A330JAA
A10C477	281-0765-00	B100100	B110099	CAP,FXD,CER DI:100PF,5%,100V (2246 MOD A,2Y)	04222	SA102A101JAA
A10C477	281-0872-00	B110100		CAP,FXD,CER DI:91PF,5%,100V (2246 MOD A,2Y)	04222	MC101A910J
A10C477	281-0765-00	B700100	B710099	CAP,FXD,CER DI:100PF,5%,100V (2246 1Y)	04222	SA102A101JAA
A10C477	281-0872-00	B710100		CAP,FXD,CER DI:91PF,5%,100V (2246 1Y)	04222	MC101A910J
A10C478	281-0864-00	B110100		CAP,FXD,CER DI:430PF,5%,100V (2246 MOD A,2Y)	04222	SA101A431JAA
A10C478	281-0864-00	B710100		CAP,FXD,CER DI:430PF,5%,100V (2246 1Y)	04222	SA101A431JAA
A10C480	281-0909-00	B110100		CAP,FXD,CER DI:0.022UF,20%,50V (2246 MOD A,2Y)	04222	SA105C223MAA
A10C480	281-0909-00	B710100		CAP,FXD,CER DI:0.022UF,20%,50V (2246 1Y)	04222	SA105C223MAA
A10C481	281-0909-00			CAP,FXD,CER DI:0.022UF,20%,50V	04222	SA105C223MAA
A10C482	281-0909-00			CAP,FXD,CER DI:0.022UF,20%,50V	04222	SA105C223MAA
A10C483	281-0820-00			CAP,FXD,CER DI:680 PF,10%,50V	04222	SA101C681KAA
A10C484	281-0765-00	B100100	B110099	CAP,FXD,CER DI:100PF,5%,100V (2246 MOD A,2Y)	04222	SA102A101JAA
A10C484	281-0861-00	B110100		CAP,FXD,CER DI:270PF,5%,50V (2246 MOD A,2Y)	04222	SA101A271JAA
A10C484	281-0765-00	B700100	B710099	CAP,FXD,CER DI:100PF,5%,100V (2246 1Y)	04222	SA102A101JAA
A10C484	281-0861-00	B710100		CAP,FXD,CER DI:270PF,5%,50V (2246 1Y)	04222	SA101A271JAA
A10C485	281-0765-00	B100100	B110099	CAP,FXD,CER DI:100PF,5%,100V (2246 MOD A,2Y)	04222	SA102A101JAA

Component Number	Tektronix Part No.	Serial No. Effective	Serial No. Dscont	Name & Description	Mfr. Code	Mfr. Part No.
A10C485	281-0861-00	B110100	B119999	CAP,FXD,CER DI:270PF,5%,50V (2246 MOD A,2Y)	04222	SA101A271JAA
A10C485	283-0196-00	B120000		CAP,FXD,CER DI:270PF,10%,50V (2246 MOD A,2Y)	16299	SR155C271KAA
A10C485	281-0765-00	B700100	B710099	CAP,FXD,CER DI:100PF,5%,100V (2246 1Y)	04222	SA102A101JAA
A10C485	281-0861-00	B710100	B714999	CAP,FXD,CER DI:270PF,5%,50V (2246 1Y)	04222	SA101A271JAA
A10C485	283-0196-00	B715000		CAP,FXD,CER DI:270PF,10%,50V (2246 1Y)	16299	SR155C271KAA
A10C486	281-0765-00	B100100	B110099	CAP,FXD,CER DI:100PF,5%,100V (2246 MOD A,2Y)	04222	SA102A101JAA
A10C486	281-0765-00	B700100	B710099	CAP,FXD,CER DI:100PF,5%,100V (2246 1Y)	04222	SA102A101JAA
A10C487	281-0765-00			CAP,FXD,CER DI:100PF,5%,100V	04222	SA102A101JAA
A10C488	281-0765-00	B100100	B110099	CAP,FXD,CER DI:100PF,5%,100V (2246 MOD A,2Y)	04222	SA102A101JAA
A10C488	283-0196-00	B120000		CAP,FXD,CER DI:270PF,10%,50V (2246 MOD A,2Y)	16299	SR155C271KAA
A10C488	281-0765-00	B700100	B710099	CAP,FXD,CER DI:100PF,5%,100V (2246 1Y)	04222	SA102A101JAA
A10C488	283-0196-00	B715000		CAP,FXD,CER DI:270PF,10%,50V (2246 1Y)	16299	SR155C271KAA
A10C489	281-0765-00			CAP,FXD,CER DI:100PF,5%,100V	04222	SA102A101JAA
A10C491	281-0819-00			CAP,FXD,CER DI:33 PF,5%,50V	04222	SA102A330JAA
A10C492	281-0819-00			CAP,FXD,CER DI:33 PF,5%,50V	04222	SA102A330JAA
A10C493	281-0819-00			CAP,FXD,CER DI:33 PF,5%,50V	04222	SA102A330JAA
A10C494	281-0819-00			CAP,FXD,CER DI:33 PF,5%,50V	04222	SA102A330JAA
A10C496	281-0864-00	B110254	B119999	CAP,FXD,CER DI:430PF,5%,100V (2246 MOD A,2Y)	04222	SA101A431JAA
A10C496	283-0196-00	B120000		CAP,FXD,CER DI:270PF,10%,50V (2246 MOD A,2Y)	16299	SR155C271KAA
A10C496	281-0864-00	B710152	B714999	CAP,FXD,CER DI:430PF,5%,100V (2246 1Y)	04222	SA101A431JAA
A10C496	283-0196-00	B715000		CAP,FXD,CER DI:270PF,10%,50V (2246 1Y)	16299	SR155C271KAA
A10C501	281-0909-00			CAP,FXD,CER DI:0.022UF,20%,50V	04222	SA105C223MAA
A10C502	281-0909-00			CAP,FXD,CER DI:0.022UF,20%,50V	04222	SA105C223MAA
A10C503	281-0909-00			CAP,FXD,CER DI:0.022UF,20%,50V	04222	SA105C223MAA
A10C505	281-0909-00			CAP,FXD,CER DI:0.022UF,20%,50V	04222	SA105C223MAA
A10C600	281-0861-00			CAP,FXD,CER DI:270PF,5%,50V	04222	SA101A271JAA
A10C601	281-0861-00			CAP,FXD,CER DI:270PF,5%,50V	04222	SA101A271JAA
A10C602	281-0819-00			CAP,FXD,CER DI:33 PF,5%,50V	04222	SA102A330JAA
A10C603	281-0819-00			CAP,FXD,CER DI:33 PF,5%,50V	04222	SA102A330JAA
A10C604	281-0909-00			CAP,FXD,CER DI:0.022UF,20%,50V	04222	SA105C223MAA
A10C605	281-0909-00			CAP,FXD,CER DI:0.022UF,20%,50V	04222	SA105C223MAA
A10C606	281-0909-00			CAP,FXD,CER DI:0.022UF,20%,50V	04222	SA105C223MAA
A10C607	281-0765-00			CAP,FXD,CER DI:100PF,5%,100V	04222	SA102A101JAA
A10C608	281-0765-00			CAP,FXD,CER DI:100PF,5%,100V	04222	SA102A101JAA
A10C609	281-0909-00			CAP,FXD,CER DI:0.022UF,20%,50V	04222	SA105C223MAA

Component Number	Tektronix Part No.	Serial No. Effective	Serial No. Dscont	Name & Description	Mfr. Code	Mfr. Part No.
A10C610	281-0909-00			CAP,FXD,CER DI:0.022UF,20%,50V	04222	SA105C223MAA
A10C611	281-0810-00			CAP,FXD,CER DI:5.6PF,+/-0.5PF,100VTUBULAR,MI	04222	SA102A5R6DAA
A10C612	281-0810-00			CAP,FXD,CER DI:5.6PF,+/-0.5PF,100VTUBULAR,MI	04222	SA102A5R6DAA
A10C613	281-0909-00			CAP,FXD,CER DI:0.022UF,20%,50V	04222	SA105C223MAA
A10C614	281-0776-00	B110100		CAP,FXD,CER DI:120PF,5%,100V (2246 MOD A)	04222	SA102A121JAA
A10C614	281-0776-00	B710100		CAP,FXD,CER DI:120PF,5%,100V (2246 1Y)	04222	SA102A121JAA
A10C636	281-0909-00	B120000		CAP,FXD,CER DI:0.022UF,20%,50V (2246 MOD A,2Y)	04222	SA105C223MAA
A10C636	281-0909-00	B715000		CAP,FXD,CER DI:0.022UF,20%,50V (2246 1Y)	04222	SA105C223MAA
A10C666	281-0819-00	B110994		CAP,FXD,CER DI:33 PF,5%,50V (2246 MOD A,2Y)	04222	SA102A330JAA
A10C666	281-0819-00	B710442		CAP,FXD,CER DI:33 PF,5%,50V (2246 1Y)	04222	SA102A330JAA
A10C701	281-0909-00			CAP,FXD,CER DI:0.022UF,20%,50V	04222	SA105C223MAA
A10C702	281-0909-00			CAP,FXD,CER DI:0.022UF,20%,50V	04222	SA105C223MAA
A10C703	281-0909-00			CAP,FXD,CER DI:0.022UF,20%,50V	04222	SA105C223MAA
A10C704	281-0909-00			CAP,FXD,CER DI:0.022UF,20%,50V	04222	SA105C223MAA
A10C705	283-0057-00	B100100	B119999	CAP,FXD,CER DI:0.1UF,+80-20%,200V (2246 MOD A,2Y)	04222	SR302E105ZAA
A10C705	285-1460-00	B120000		CAP,FXD,MTLZD:0.1UF,20%,250V,5MM LEAD SPACING (2246 MOD A,2Y)	TK1913	MKS 2 0.1/250/2
A10C705	283-0057-00	B700100	B714999	CAP,FXD,CER DI:0.1UF,+80-20%,200V (2246 1Y)	04222	SR302E105ZAA
A10C705	285-1460-00	B715000		CAP,FXD,MTLZD:0.1UF,20%,250V,5MM LEAD SPACING (2246 1Y)	TK1913	MKS 2 0.1/250/2
A10C706	281-0893-00			CAP,FXD,CER DI:4.7PF,+/-0.5PF,100VTUBULAR,MI	04222	SA102A4R7DAA
A10C707	281-0798-00			CAP,FXD,CER DI:51PF,1%,100V	TK1743	CGB510GEN
A10C708	281-0909-00			CAP,FXD,CER DI:0.022UF,20%,50V	04222	SA105C223MAA
A10C711	283-0201-01			CAP,FXD,CER DI:27PF,10%,50V	04222	SR155A270KAATR
A10C712	283-0201-01			CAP,FXD,CER DI:27PF,10%,50V	04222	SR155A270KAATR
A10C801	283-0057-00	B100100	B119999	CAP,FXD,CER DI:0.1UF,+80-20%,200V (2246 MOD A,2Y)	04222	SR302E105ZAA
A10C801	285-1460-00	B120000		CAP,FXD,MTLZD:0.1UF,20%,250V,5MM LEAD SPACING (2246 MOD A,2Y)	TK1913	MKS 2 0.1/250/2
A10C801	283-0057-00	B700100	B714999	CAP,FXD,CER DI:0.1UF,+80-20%,200V (2246 1Y)	04222	SR302E105ZAA
A10C801	285-1460-00	B715000		CAP,FXD,MTLZD:0.1UF,20%,250V,5MM LEAD SPACING (2246 1Y)	TK1913	MKS 2 0.1/250/2
A10C802	283-0057-00	B100100	B119999	CAP,FXD,CER DI:0.1UF,+80-20%,200V (2246 MOD A,2Y)	04222	SR302E105ZAA
A10C802	285-1460-00	B120000		CAP,FXD,MTLZD:0.1UF,20%,250V,5MM LEAD SPACING (2246 MOD A,2Y)	TK1913	MKS 2 0.1/250/2
A10C802	283-0057-00	B700100	B714999	CAP,FXD,CER DI:0.1UF,+80-20%,200V (2246 1Y)	04222	SR302E105ZAA

Component Number	Tektronix Part No.	Serial No. Effective	Dscont	Name & Description	Mfr. Code	Mfr. Part No.
A10C802	285-1460-00	B715000		CAP,FXD,MTLZD:0.1UF,20%,250V,5MM LEAD SPACING (2246 1Y)	TK1913	MKS 2 0.1/250/2
A10C803	281-0707-00	B100100	B110099	CAP,FXD,CER DI:15000PF,10%,200V (2246 MOD A,2Y)	04222	MA302C153KAA
A10C803	281-0909-00	B110100		CAP,FXD,CER DI:0.022UF,20%,50V (2246 MOD A,2Y)	04222	SA105C223MAA
A10C803	281-0707-00	B700100	B710099	CAP,FXD,CER DI:15000PF,10%,200V (2246 1Y)	04222	MA302C153KAA
A10C803	281-0909-00	B710100		CAP,FXD,CER DI:0.022UF,20%,50V (2246 1Y)	04222	SA105C223MAA
A10C804	281-0909-00	B100100	B110099	CAP,FXD,CER DI:0.022UF,20%,50V (2246 MOD A,2Y)	04222	SA105C223MAA
A10C804	283-0057-00	B110100	B119999	CAP,FXD,CER DI:0.1UF,+80-20%,200V (2246 MOD A,2Y)	04222	SR302E105ZAA
A10C804	285-1460-00	B120000		CAP,FXD,MTLZD:0.1UF,20%,250V,5MM LEAD SPACING (2246 MOD A,2Y)	TK1913	MKS 2 0.1/250/2
A10C804	281-0909-00	B700100	B710099	CAP,FXD,CER DI:0.022UF,20%,50V (2246 1Y)	04222	SA105C223MAA
A10C804	283-0057-00	B710100	B714999	CAP,FXD,CER DI:0.1UF,+80-20%,200V (2246 1Y)	04222	SR302E105ZAA
A10C804	285-1460-00	B715000		CAP,FXD,MTLZD:0.1UF,20%,250V,5MM LEAD SPACING (2246 1Y)	TK1913	MKS 2 0.1/250/2
A10C805	281-0909-00			CAP,FXD,CER DI:0.022UF,20%,50V	04222	SA105C223MAA
A10C806	281-0909-00			CAP,FXD,CER DI:0.022UF,20%,50V	04222	SA105C223MAA
A10C807	281-0064-00	B100100	B110099	CAP,VAR,PLASTIC:0.25-1.5PF,600V (2246 MOD A,2Y)	52769	ER-530-013
A10C807	281-0214-00	B110100		CAP,VAR,CER DI:0.6-3PF,400V (2246 MOD A,2Y)	52763	313613-140
A10C807	281-0064-00	B700100	B710099	CAP,VAR,PLASTIC:0.25-1.5PF,600V (2246 1Y)	52769	ER-530-013
A10C807	281-0214-00	B710100		CAP,VAR,CER DI:0.6-3PF,400V (2246 1Y)	52763	313613-140
A10C808	281-0765-00			CAP,FXD,CER DI:100PF,5%,100V	04222	SA102A101JAA
A10C809	283-0057-00	B100100	B119999	CAP,FXD,CER DI:0.1UF,+80-20%,200V (2246 MOD A,2Y)	04222	SR302E105ZAA
A10C809	285-1460-00	B120000		CAP,FXD,MTLZD:0.1UF,20%,250V,5MM LEAD SPACING (2246 MOD A,2Y)	TK1913	MKS 2 0.1/250/2
A10C809	283-0057-00	B700100	B714999	CAP,FXD,CER DI:0.1UF,+80-20%,200V (2246 1Y)	04222	SR302E105ZAA
A10C809	285-1460-00	B715000		CAP,FXD,MTLZD:0.1UF,20%,250V,5MM LEAD SPACING (2246 1Y)	TK1913	MKS 2 0.1/250/2
A10C810	281-0707-00	B100100	B110099	CAP,FXD,CER DI:15000PF,10%,200V (2246 MOD A,2Y)	04222	MA302C153KAA
A10C810	281-0707-00	B700100	B710099	CAP,FXD,CER DI:15000PF,10%,200V (2246 1Y)	04222	MA302C153KAA

Component Number	Tektronix Part No.	Serial No. Effective	Serial No. Dscont	Name & Description	Mfr. Code	Mfr. Part No.
A10C811	281-0909-00			CAP,FXD,CER DI:0.022UF,20%,50V	04222	SA105C223MAA
A10C814	281-0064-00	B100100	B110099	CAP,VAR,PLASTIC:0.25-1.5PF,600V (2246 MOD A,2Y)	52769	ER-530-013
A10C814	281-0214-00	B110100		CAP,VAR,CER DI:0.6-3PF,400V (2246 MOD A,2Y)	52763	313613-140
A10C814	281-0064-00	B700100	B710099	CAP,VAR,PLASTIC:0.25-1.5PF,600V (2246 1Y)	52769	ER-530-013
A10C814	281-0214-00	B710100		CAP,VAR,CER DI:0.6-3PF,400V (2246 1Y)	52763	313613-140
A10C815	281-0909-00			CAP,FXD,CER DI:0.022UF,20%,50V	04222	SA105C223MAA
A10C816	281-0909-00			CAP,FXD,CER DI:0.022UF,20%,50V	04222	SA105C223MAA
A10C817	290-1198-00			CAP,FXD,ELCTLT:100UF,20%,10VAC	80009	290119800
A10C818	283-0057-00	B100100	B119999	CAP,FXD,CER DI:0.1UF,+80-20%,200V (2246 MOD A,2Y)	04222	SR302E105ZAA
A10C818	285-1460-00	B120000		CAP,FXD,MTLZD:0.1UF,20%,250V,5MM LEAD SPACING (2246 MOD A,2Y)	TK1913	MKS 2 0.1/250/2
A10C818	283-0057-00	B700100	B714999	CAP,FXD,CER DI:0.1UF,+80-20%,200V (2246 1Y)	04222	SR302E105ZAA
A10C818	285-1460-00	B715000		CAP,FXD,MTLZD:0.1UF,20%,250V,5MM LEAD SPACING (2246 1Y)	TK1913	MKS 2 0.1/250/2
A10C819	281-0765-00			CAP,FXD,CER DI:100PF,5%,100V	04222	SA102A101JAA
A10C820	281-0909-00	B110100		CAP,FXD,CER DI:0.022UF,20%,50V (2246 MOD A,2Y)	04222	SA105C223MAA
A10C820	281-0909-00	B710100		CAP,FXD,CER DI:0.022UF,20%,50V (2246 1Y)	04222	SA105C223MAA
A10C821	281-0909-00	B110100		CAP,FXD,CER DI:0.022UF,20%,50V (2246 MOD A,2Y)	04222	SA105C223MAA
A10C821	281-0909-00	B710100		CAP,FXD,CER DI:0.022UF,20%,50V (2246 1Y)	04222	SA105C223MAA
A10C822	281-0909-00	B110100		CAP,FXD,CER DI:0.022UF,20%,50V (2246 MOD A,2Y)	04222	SA105C223MAA
A10C822	281-0909-00	B710100		CAP,FXD,CER DI:0.022UF,20%,50V (2246 1Y)	04222	SA105C223MAA
A10C860	281-0765-00	B110100		CAP,FXD,CER DI:100PF,5%,100V (2246 MOD A,2Y)	04222	SA102A101JAA
A10C860	281-0765-00	B710100		CAP,FXD,CER DI:100PF,5%,100V (2246 1Y)	04222	SA102A101JAA
A10C870	281-0816-00	B110100		CAP,FXD,CER DI:82 PF,5%,100V (2246 MOD A,2Y)	04222	SA106A820JAA
A10C870	281-0816-00	B710100		CAP,FXD,CER DI:82 PF,5%,100V (2246 1Y)	04222	SA106A820JAA
A10C880	281-0909-00	B110100		CAP,FXD,CER DI:0.022UF,20%,50V (2246 MOD A,2Y)	04222	SA105C223MAA
A10C880	281-0909-00	B710100		CAP,FXD,CER DI:0.022UF,20%,50V (2246 1Y)	04222	SA105C223MAA
A10C901	281-0909-00			CAP,FXD,CER DI:0.022UF,20%,50V	04222	SA105C223MAA
A10C902	281-0909-00			CAP,FXD,CER DI:0.022UF,20%,50V	04222	SA105C223MAA
A10C903	290-0974-01			CAP,FXD,ELCTLT:10UF,20%,50V	1W344	KMC5OVB1ORM5X11
A10C904	290-0974-01			CAP,FXD,ELCTLT:10UF,20%,50V	1W344	KMC5OVB1ORM5X11

Component Number	Tektronix Part No.	Serial No. Effective	Dscont	Name & Description	Mfr. Code	Mfr. Part No.
A10C910	281-0909-00			CAP,FXD,CER DI:0.022UF,20%,50V	04222	SA105C223MAA
A10C935	285-1339-00			CAP,FXD,MTLZD:0.022UF,10%,63V	TK1913	MKS 2 0.022/63/
A10C1001	290-0974-01			CAP,FXD,ELCTLT:10UF,20%,50V	1W344	KMC5OVB1ORM5X11
A10C1002	290-0974-01	B700100	B710172	CAP,FXD,ELCTLT:10UF,20%,50V (2246 1Y)	1W344	KMC5OVB1ORM5X11
A10C1002	290-0974-00	B710173		CAP,FXD,ELCTLT:10UF,20%,50VDC (2246 1Y)	55680	UVX1H100MAA
A10C1002	290-0974-01	B100100	B110288	CAP,FXD,ELCTLT:10UF,20%,50V (2246 MOD A,2Y)	1W344	KMC5OVB1ORM5X11
A10C1002	290-0974-00	B110289		CAP,FXD,ELCTLT:10UF,20%,50VDC (2246 MOD A,2Y)	55680	UVX1H100MAA
A10C1003	290-0974-01	B700100	B710172	CAP,FXD,ELCTLT:10UF,20%,50V (2246 1Y)	1W344	KMC5OVB1ORM5X11
A10C1003	290-0974-00	B710173		CAP,FXD,ELCTLT:10UF,20%,50VDC (2246 1Y)	55680	UVX1H100MAA
A10C1003	290-0974-01	B100100	B110288	CAP,FXD,ELCTLT:10UF,20%,50V (2246 MOD A,2Y)	1W344	KMC5OVB1ORM5X11
A10C1003	290-0974-00	B110289		CAP,FXD,ELCTLT:10UF,20%,50VDC (2246 MOD A,2Y)	55680	UVX1H100MAA
A10C1004	281-0909-00			CAP,FXD,CER DI:0.022UF,20%,50V	04222	SA105C223MAA
A10C1005	281-0909-00			CAP,FXD,CER DI:0.022UF,20%,50V	04222	SA105C223MAA
A10C1006	281-0909-00			CAP,FXD,CER DI:0.022UF,20%,50V	04222	SA105C223MAA
A10C1101	281-0909-00	B700100	B710290	CAP,FXD,CER DI:0.022UF,20%,50V (2246 1Y)	04222	SA105C223MAA
A10C1101	290-0183-00	B710291		CAP,FXD,ELCTLT:1UF,10%,35V (2246 1Y)	31433	T322B105K035AS
A10C1101	281-0909-00	B100100	B110637	CAP,FXD,CER DI:0.022UF,20%,50V (2246 MOD A,2Y)	04222	SA105C223MAA
A10C1101	290-0183-00	B110638		CAP,FXD,ELCTLT:1UF,10%,35V (2246 MOD A,2Y)	31433	T322B105K035AS
A10C1102	290-0183-00	B100100	B110099	CAP,FXD,ELCTLT:1UF,10%,35V (2246 MOD A,2Y)	31433	T322B105K035AS
A10C1102	281-0909-00	B110100	B110637	CAP,FXD,CER DI:0.022UF,20%,50V (2246 MOD A,2Y)	04222	SA105C223MAA
A10C1102	290-0183-00	B110638		CAP,FXD,ELCTLT:1UF,10%,35V (2246 MOD A,2Y)	31433	T322B105K035AS
A10C1102	290-0183-00	B700100	B710099	CAP,FXD,ELCTLT:1UF,10%,35V (2246 1Y)	31433	T322B105K035AS
A10C1102	281-0909-00	B710100	B710290	CAP,FXD,CER DI:0.022UF,20%,50V (2246 1Y)	04222	SA105C223MAA
A10C1102	290-0183-00	B710291		CAP,FXD,ELCTLT:1UF,10%,35V (2246 1Y)	31433	T322B105K035AS
A10C1103	290-0183-00			CAP,FXD,ELCTLT:1UF,10%,35V	31433	T322B105K035AS
A10C1104	281-0909-00	B110100		CAP,FXD,CER DI:0.022UF,20%,50V (2246 MOD A,2Y)	04222	SA105C223MAA
A10C1104	281-0909-00	B710100		CAP,FXD,CER DI:0.022UF,20%,50V (2246 1Y)	04222	SA105C223MAA
A10C1105	290-0974-01			CAP,FXD,ELCTLT:10UF,20%,50V	1W344	KMC5OVB1ORM5X11
A10C1106	281-0820-00			CAP,FXD,CER DI:680 PF,10%,50V	04222	SA101C681KAA
A10C1107	281-0765-00			CAP,FXD,CER DI:100PF,5%,100V	04222	SA102A101JAA

Component Number	Tektronix Part No.	Serial No. Effective	Serial No. Dscont	Name & Description	Mfr. Code	Mfr. Part No.
A10C1108	290-0183-00	B710630		CAP,FXD,ELCTLT:1UF,10%,35V (2246 1Y)	31433	T322B105K035AS
A10C1108	290-0183-00	B111186		CAP,FXD,ELCTLT:1UF,10%,35V (2246 MOD A,2Y)	31433	T322B105K035AS
A10C1110	281-0799-00			CAP,FXD,CER DI:62PF,2%,100V	04222	SA101A620GAA
A10C1111	281-0799-00			CAP,FXD,CER DI:62PF,2%,100V	04222	SA101A620GAA
A10C1114	290-0974-01			CAP,FXD,ELCTLT:10UF,20%,50V	1W344	KMC5OVB1ORM5X11
A10C1130	281-0909-00			CAP,FXD,CER DI:0.022UF,20%,50V	04222	SA105C223MAA
A10C1143	281-0770-00	B710630		CAP,FXD,CER DI:1000PF,20%,100V (2246 1Y)	04222	SA101C102MAA
A10C1143	281-0770-00	B111186		CAP,FXD,CER DI:1000PF,20%,100V (2246 MOD A,2Y)	04222	SA101C102MAA
A10C1154	281-0909-00			CAP,FXD,CER DI:0.022UF,20%,50V	04222	SA105C223MAA
A10C1155	281-0909-00			CAP,FXD,CER DI:0.022UF,20%,50V	04222	SA105C223MAA
A10C1158	281-0909-00			CAP,FXD,CER DI:0.022UF,20%,50V	04222	SA105C223MAA
A10C1159	281-0909-00			CAP,FXD,CER DI:0.022UF,20%,50V	04222	SA105C223MAA
A10C1160	281-0909-00	B110100		CAP,FXD,CER DI:0.022UF,20%,50V (2246 MOD A)	04222	SA105C223MAA
A10C1160	281-0909-00	B710100		CAP,FXD,CER DI:0.022UF,20%,50V (2246 1Y)	04222	SA105C223MAA
A10C1250	283-0853-00	B120000		CAP,FXD,CER DI:2.2PF,200V (2246 MOD A,2Y)	04222	SR212A2R2DAATR
A10C1250	283-0853-00	B715000		CAP,FXD,CER DI:2.2PF,200V (2246 1Y)	04222	SR212A2R2DAATR
A10C1251	283-0853-00	B120000		CAP,FXD,CER DI:2.2PF,200V (2246 MOD A,2Y)	04222	SR212A2R2DAATR
A10C1251	283-0853-00	B715000		CAP,FXD,CER DI:2.2PF,200V (2246 1Y)	04222	SR212A2R2DAATR
A10C2701	281-0909-00			CAP,FXD,CER DI:0.022UF,20%,50V	04222	SA105C223MAA
A10C2702	281-0909-00			CAP,FXD,CER DI:0.022UF,20%,50V	04222	SA105C223MAA
A10C2703	281-0909-00			CAP,FXD,CER DI:0.022UF,20%,50V	04222	SA105C223MAA
A10C2704	281-0064-00	B100100	B110099	CAP,VAR,PLASTIC:0.25-1.5PF,600V (2246 MOD A,2Y)	52769	ER-530-013
A10C2704	283-0348-00	B110100		CAP,FXD,CER DI:0.5PF,+/-0.1PF,100V (2246 MOD A,2Y)	51642	W150-100-NP0-50
A10C2704	281-0064-00	B700100	B710099	CAP,VAR,PLASTIC:0.25-1.5PF,600V (2246 1Y)	52769	ER-530-013
A10C2704	283-0348-00	B710100		CAP,FXD,CER DI:0.5PF,+/-0.1PF,100V (2246 1Y)	51642	W150-100-NP0-50
A10C2705	281-0771-00			CAP,FXD,CER DI:2200PF,20%,200V	04222	SA106E222MAA
A10C2706	281-0893-00			CAP,FXD,CER DI:4.7PF,+/-0.5PF,100VTUBULAR,MI	04222	SA102A4R7DAA
A10C2707	281-0893-00			CAP,FXD,CER DI:4.7PF,+/-0.5PF,100VTUBULAR,MI	04222	SA102A4R7DAA
A10C2708	283-0057-00	B100100	B119999	CAP,FXD,CER DI:0.1UF,+80-20%,200V (2246 MOD A,2Y)	04222	SR302E105ZAA

Component Number	Tektronix Part No.	Serial No. Effective	Serial No. Dscont	Name & Description	Mfr. Code	Mfr. Part No.
A10C2708	285-1460-00	B120000		CAP,FXD,MTLZD:0.1UF,20%,250V,5MM LEAD SPACING (2246 MOD A,2Y)	TK1913	MKS 2 0.1/250/2
A10C2708	283-0057-00	B700100	B714999	CAP,FXD,CER DI:0.1UF,+80-20%,200V (2246 1Y)	04222	SR302E105ZAA
A10C2708	285-1460-00	B715000		CAP,FXD,MTLZD:0.1UF,20%,250V,5MM LEAD SPACING (2246 1Y)	TK1913	MKS 2 0.1/250/2
A10C2709	283-0057-00	B100100	B119999	CAP,FXD,CER DI:0.1UF,+80-20%,200V (2246 MOD A,2Y)	04222	SR302E105ZAA
A10C2709	285-1460-00	B120000		CAP,FXD,MTLZD:0.1UF,20%,250V,5MM LEAD SPACING (2246 MOD A,2Y)	TK1913	MKS 2 0.1/250/2
A10C2709	283-0057-00	B700100	B714999	CAP,FXD,CER DI:0.1UF,+80-20%,200V (2246 1Y)	04222	SR302E105ZAA
A10C2709	285-1460-00	B715000		CAP,FXD,MTLZD:0.1UF,20%,250V,5MM LEAD SPACING (2246 1Y)	TK1913	MKS 2 0.1/250/2
A10C2710	283-0057-00	B100100	B119999	CAP,FXD,CER DI:0.1UF,+80-20%,200V (2246 MOD A,2Y)	04222	SR302E105ZAA
A10C2710	285-1460-00	B120000		CAP,FXD,MTLZD:0.1UF,20%,250V,5MM LEAD SPACING (2246 MOD A,2Y)	TK1913	MKS 2 0.1/250/2
A10C2710	283-0057-00	B700100	B714999	CAP,FXD,CER DI:0.1UF,+80-20%,200V (2246 1Y)	04222	SR302E105ZAA
A10C2710	285-1460-00	B715000		CAP,FXD,MTLZD:0.1UF,20%,250V,5MM LEAD SPACING (2246 1Y)	TK1913	MKS 2 0.1/250/2
A10C2711	285-1184-01			CAP,FXD,MTLZD:0.01UF,20%,4KV	84411	TEK183 .01 20 4
A10C2712	285-1040-00			CAP,FXD,PLASTIC:1200PF,10%,4000V	84411	TEK-134-122940
A10C2713	281-0771-00			CAP,FXD,CER DI:2200PF,20%,200V	04222	SA106E222MAA
A10C2715	281-0909-00			CAP,FXD,CER DI:0.022UF,20%,50V	04222	SA105C223MAA
A10C2716	281-0771-00			CAP,FXD,CER DI:2200PF,20%,200V	04222	SA106E222MAA
A10C2717	283-0057-00	B100100	B119999	CAP,FXD,CER DI:0.1UF,+80-20%,200V (2246 MOD A,2Y)	04222	SR302E105ZAA
A10C2717	285-1460-00	B120000		CAP,FXD,MTLZD:0.1UF,20%,250V,5MM LEAD SPACING (2246 MOD A,2Y)	TK1913	MKS 2 0.1/250/2
A10C2718	283-0057-00	B700100	B714999	CAP,FXD,CER DI:0.1UF,+80-20%,200V (2246 1Y)	04222	SR302E105ZAA
A10C2718	285-1460-00	B715000		CAP,FXD,MTLZD:0.1UF,20%,250V,5MM LEAD SPACING (2246 1Y)	TK1913	MKS 2 0.1/250/2
A10C2719	285-1184-01			CAP,FXD,MTLZD:0.01UF,20%,4KV	84411	TEK183 .01 20 4
A10C2720	285-1040-00			CAP,FXD,PLASTIC:1200PF,10%,4000V	84411	TEK-134-122940
A10C2721	281-0771-00			CAP,FXD,CER DI:2200PF,20%,200V	04222	SA106E222MAA
A10C2723	281-0909-00			CAP,FXD,CER DI:0.022UF,20%,50V	04222	SA105C223MAA
A10C2724	285-1184-01			CAP,FXD,MTLZD:0.01UF,20%,4KV	84411	TEK183 .01 20 4
A10C2758	285-1184-01	B100100	B110099	CAP,FXD,MTLZD:0.01UF,20%,4KV (2246 MOD A,2Y)	84411	TEK183 .01 20 4
A10C2758	285-1184-01	B700100	B710099	CAP,FXD,MTLZD:0.01UF,20%,4KV (2246 1Y)	84411	TEK183 .01 20 4
A10C2759	281-0759-00			CAP,FXD,CER DI:22PF,10%,100V	04222	SA101A220KAA
A10C2783	283-0057-00	B100100	B119999	CAP,FXD,CER DI:0.1UF,+80-20%,200V (2246 MOD A,2Y)	04222	SR302E105ZAA

Component Number	Tektronix Part No.	Serial No. Effective	Dscont	Name & Description	Mfr. Code	Mfr. Part No.
A10C2783	285-1460-00	B120000		CAP,FXD,MTLZD:0.1UF,20%,250V,5MM LEAD SPACING (2246 MOD A,2Y)	TK1913	MKS 2 0.1/250/2
A10C2783	283-0057-00	B700100	B714999	CAP,FXD,CER DI:0.1UF,+80-20%,200V (2246 1Y)	04222	SR302E105ZAA
A10C2783	285-1460-00	B715000		CAP,FXD,MTLZD:0.1UF,20%,250V,5MM LEAD SPACING (2246 1Y)	TK1913	MKS 2 0.1/250/2
A10C2784	281-0909-00			CAP,FXD,CER DI:0.022UF,20%,50V	04222	SA105C223MAA
A10C2785	283-0057-00	B100100	B119999	CAP,FXD,CER DI:0.1UF,+80-20%,200V (2246 MOD A,2Y)	04222	SR302E105ZAA
A10C2785	285-1460-00	B120000		CAP,FXD,MTLZD:0.1UF,20%,250V,5MM LEAD SPACING (2246 MOD A,2Y)	TK1913	MKS 2 0.1/250/2
A10C2785	283-0057-00	B700100	B714999	CAP,FXD,CER DI:0.1UF,+80-20%,200V (2246 1Y)	04222	SR302E105ZAA
A10C2785	285-1460-00	B715000		CAP,FXD,MTLZD:0.1UF,20%,250V,5MM LEAD SPACING (2246 1Y)	TK1913	MKS 2 0.1/250/2
A10CR131	152-0246-00			SEMICOND DVC,DI:SW,SI,40V,200MA,DO-7	27014	FDH5227.03
A10CR151	152-0246-00			SEMICOND DVC,DI:SW,SI,40V,200MA,DO-7	27014	FDH5227.03
A10CR171	152-0141-02			DIODE,SIG:,ULTRA FAST;40V,150MA,4NS,2PF	27014	FDH9427
A10CR201	152-0141-02	B100100	B119999	DIODE,SIG:,ULTRA FAST;40V,150MA,4NS,2PF (2246 MOD A,2Y)	27014	FDH9427
A10CR201	152-1107-00	B120000		DIODE,SIG:SCHTKY,;40V,350MA,12PF (2246 MOD A,2Y)	50088	BAT48
A10CR201	152-0141-02	B700100	B714999	DIODE,SIG:,ULTRA FAST;40V,150MA,4NS,2PF (2246 1Y)	27014	FDH9427
A10CR201	152-1107-00	B715000		DIODE,SIG:SCHTKY,;40V,350MA,12PF (2246 1Y)	50088	BAT48
A10CR202	152-0141-02	B100100	B119999	DIODE,SIG:,ULTRA FAST;40V,150MA,4NS,2PF (2246 MOD A,2Y)	27014	FDH9427
A10CR202	152-1107-00	B120000		DIODE,SIG:SCHTKY,;40V,350MA,12PF (2246 MOD A,2Y)	50088	BAT48
A10CR202	152-0141-02	B700100	B714999	DIODE,SIG:,ULTRA FAST;40V,150MA,4NS,2PF (2246 1Y)	27014	FDH9427
A10CR202	152-1107-00	B715000		DIODE,SIG:SCHTKY,;40V,350MA,12PF (2246 1Y)	50088	BAT48
A10CR260	152-0066-00			DIODE,RECT:,;400V,1A,30A IFSM	05828	GP10G-020
A10CR261	152-0066-00			DIODE,RECT:,;400V,1A,30A IFSM	05828	GP10G-020
A10CR262	152-0650-00			DIODE,SIG:,VVC;30V,2.3PF@C25,C3/25=5.25	50101	U11-4101
A10CR263	152-0650-00			DIODE,SIG:,VVC;30V,2.3PF@C25,C3/25=5.25	50101	U11-4101
A10CR301	152-0141-02			DIODE,SIG:,ULTRA FAST;40V,150MA,4NS,2PF	27014	FDH9427
A10CR432	152-0246-00			SEMICOND DVC,DI:SW,SI,40V,200MA,DO-7	27014	FDH5227.03
A10CR462	152-0246-00			SEMICOND DVC,DI:SW,SI,40V,200MA,DO-7	27014	FDH5227.03
A10CR603	152-0141-02			DIODE,SIG:,ULTRA FAST;40V,150MA,4NS,2PF	27014	FDH9427
A10CR801	152-0141-02			DIODE,SIG:,ULTRA FAST;40V,150MA,4NS,2PF	27014	FDH9427
A10CR802	152-0061-00	B100100	B110099	SEMICOND DVC,DI:SW,SI,175V,0.1A,DO-35CD8393 (2246 MOD A,2Y)	12969	PV122
A10CR802	152-0141-02	B110100		DIODE,SIG:,ULTRA FAST;40V,150MA,4NS,2PF (2246 MOD A,2Y)	27014	FDH9427

Component Number	Tektronix Part No.	Serial No. Effective	Serial No. Dscont	Name & Description	Mfr. Code	Mfr. Part No.
A10CR802	152-0061-00	B700100	B710099	SEMICOND DVC,DI:SW,SI,175V,0.1A,DO-35CD8393 (2246 1Y)	12969	PV122
A10CR802	152-0141-02	B710100		DIODE,SIG:,ULTRA FAST;40V,150MA,4NS,2PF (2246 1Y)	27014	FDH9427
A10CR803	152-0141-02	B113047		DIODE,SIG:,ULTRA FAST;40V,150MA,4NS,2PF (2246 MOD A,2Y)	27014	FDH9427
A10CR803	152-0141-02	B711085		DIODE,SIG:,ULTRA FAST;40V,150MA,4NS,2PF (2246 1Y)	27014	FDH9427
A10CR807	152-0141-02	B113047		DIODE,SIG:,ULTRA FAST;40V,150MA,4NS,2PF (2246 MOD A,2Y)	27014	FDH9427
A10CR807	152-0141-02	B711085		DIODE,SIG:,ULTRA FAST;40V,150MA,4NS,2PF (2246 1Y)	27014	FDH9427
A10CR819	152-0061-00	B100100	B110099	SEMICOND DVC,DI:SW,SI,175V,0.1A,DO-35CD8393 (2246 MOD A,2Y)	12969	PV122
A10CR819	152-0061-00	B700100	B710099	SEMICOND DVC,DI:SW,SI,175V,0.1A,DO-35CD8393 (2246 1Y)	12969	PV122
A10CR935	152-0141-02			DIODE,SIG:,ULTRA FAST;40V,150MA,4NS,2PF	27014	FDH9427
A10CR936	152-0141-02			DIODE,SIG:,ULTRA FAST;40V,150MA,4NS,2PF	27014	FDH9427
A10CR1001	152-0141-02			DIODE,SIG:,ULTRA FAST;40V,150MA,4NS,2PF	27014	FDH9427
A10CR1002	152-0141-02			DIODE,SIG:,ULTRA FAST;40V,150MA,4NS,2PF	27014	FDH9427
A10CR1003	152-0141-02			DIODE,SIG:,ULTRA FAST;40V,150MA,4NS,2PF	27014	FDH9427
A10CR1004	152-0141-02			DIODE,SIG:,ULTRA FAST;40V,150MA,4NS,2PF	27014	FDH9427
A10CR1005	152-0141-02			DIODE,SIG:,ULTRA FAST;40V,150MA,4NS,2PF	27014	FDH9427
A10CR2701	152-0400-00			DIODE,RECT:,FAST RCVRY;400V,1A,200NS	14552	MB2501
A10CR2702	152-0400-00			DIODE,RECT:,FAST RCVRY;400V,1A,200NS	14552	MB2501
A10CR2703	152-0400-00			DIODE,RECT:,FAST RCVRY;400V,1A,200NS	14552	MB2501
A10CR2704	152-0400-00			DIODE,RECT:,FAST RCVRY;400V,1A,200NS	14552	MB2501
A10CR2705	152-0141-02			DIODE,SIG:,ULTRA FAST;40V,150MA,4NS,2PF	27014	FDH9427
A10CR2707	152-0141-02			DIODE,SIG:,ULTRA FAST;40V,150MA,4NS,2PF	27014	FDH9427
A10CR2713	152-0141-02			DIODE,SIG:,ULTRA FAST;40V,150MA,4NS,2PF	27014	FDH9427
A10CR2714	152-0400-00			DIODE,RECT:,FAST RCVRY;400V,1A,200NS	14552	MB2501
A10CR2715	152-0400-00			DIODE,RECT:,FAST RCVRY;400V,1A,200NS	14552	MB2501
A10CR2716	152-0400-00			DIODE,RECT:,FAST RCVRY;400V,1A,200NS	14552	MB2501
A10CR2717	152-0400-00			DIODE,RECT:,FAST RCVRY;400V,1A,200NS	14552	MB2501
A10CR2718	152-0400-00			DIODE,RECT:,FAST RCVRY;400V,1A,200NS	14552	MB2501
A10DL22	119-2119-01			DELAY LINE,ELEC: W/STRAINRELIEF	80009	119211901
A10DS901	150-0146-00			LAMP,INCAND:14V,80MA,73E,WEDGE BASE	S3774	OL-2182-01
A10DS902	150-0146-00			LAMP,INCAND:14V,80MA,73E,WEDGE BASE	S3774	OL-2182-01
A10DS903	150-0146-00			LAMP,INCAND:14V,80MA,73E,WEDGE BASE	S3774	OL-2182-01
A10DS2701	150-0035-00			LAMP,GLOW:90V MAX,0.3MA,AID-T,WIRE LD	TK0213	JH005/3011JA
A10DS2702	150-0035-00			LAMP,GLOW:90V MAX,0.3MA,AID-T,WIRE LD	TK0213	JH005/3011JA
A10DS2703	150-0035-00			LAMP,GLOW:90V MAX,0.3MA,AID-T,WIRE LD	TK0213	JH005/3011JA
A10DS2704	150-0035-00			LAMP,GLOW:90V MAX,0.3MA,AID-T,WIRE LD	TK0213	JH005/3011JA

Component Number	Tektronix Part No.	Serial No. Effective	Serial No. Dscont	Name & Description	Mfr. Code	Mfr. Part No.
A10J11	131-3731-00			CONN,RF JACK:BNC,;50 OHM,FEMALE,STR,SLDR CUP/FRONT PNL,0.5-28 W/D FLAT,1.062 L X 0.188	24931	28JR377-1
A10J12	131-3731-00			CONN,RF JACK:BNC,;50 OHM,FEMALE,STR,SLDR CUP/FRONT PNL,0.5-28 W/D FLAT,1.062 L X 0.188	24931	28JR377-1
A10J13	131-3731-00			CONN,RF JACK:BNC,;50 OHM,FEMALE,STR,SLDR CUP/FRONT PNL,0.5-28 W/D FLAT,1.062 L X 0.188	24931	28JR377-1
A10J14	131-3731-00			CONN,RF JACK:BNC,;50 OHM,FEMALE,STR,SLDR CUP/FRONT PNL,0.5-28 W/D FLAT,1.062 L X 0.188	24931	28JR377-1
A10J15	131-3464-00			CONTACT,ELEC:BRASS	TK1935	ORDER BY DESC
A10J927	131-2921-00	B100100	B110099	CONN,HDR:PCB,;MALE,RTANG,2 X 1,0.1 CTR, 0.318 MLG X 0.110 TAIL,0.238 H,30 GOLD (2246 MOD A,2Y)	00779	1-86479-3
A10J927	131-4546-00	B110100		CONN,HDR:PCB,;MALE,STR,1 X 2,0.1 CTR,0.230 MLG X 0.120 TAIL,30 GOLD (2246 MOD A,2Y)	00779	103239-2
A10J927	131-2921-00	B700100	B710099	CONN,HDR:PCB,;MALE,RTANG,2 X 1,0.1 CTR, 0.318 MLG X 0.110 TAIL,0.238 H,30 GOLD (2246 1Y)	00779	1-86479-3
A10J927	131-4546-00	B710100		CONN,HDR:PCB,;MALE,STR,1 X 2,0.1 CTR,0.230 MLG X 0.120 TAIL,30 GOLD (2246 1Y)	00779	103239-2
A10J1204	131-3638-00			CONN,BOX PWR:PCB,;FEMALE,STR,1 X 13,0.156 CTR,0.450 H X 0.160 TAIL,BOTTOM ENTRY,20 GOLD,0.156 X 0.125 CTR PCB	27264	09-62-3132
A10K100	148-0174-00			RELAY,ARMATURE:1 FORM C,12VDC	TK1689	DS1EMDC12V-H166
A10K101	148-0174-00			RELAY,ARMATURE:1 FORM C,12VDC	TK1689	DS1EMDC12V-H166
A10K102	148-0173-01			RELAY,ARMATURE:1 FORM C,INSERT LOSS 0.3 DB@900MHZ,VSWR 1.5@900MHZ,COIL 12VDC 720 OHM,CONTACT 30VDC 0.5A 10W,PKG .795 X .441	TK1689	RK1EDC12V
A10K103	148-0173-01			RELAY,ARMATURE:1 FORM C,INSERT LOSS 0.3 DB@900MHZ,VSWR 1.5@900MHZ,COIL 12VDC 720 OHM,CONTACT 30VDC 0.5A 10W,PKG .795 X .441	TK1689	RK1EDC12V
A10K104	148-0174-00			RELAY,ARMATURE:1 FORM C,12VDC	TK1689	DS1EMDC12V-H166
A10K105	148-0174-00			RELAY,ARMATURE:1 FORM C,12VDC	TK1689	DS1EMDC12V-H166
A10K107	148-0174-00			RELAY,ARMATURE:1 FORM C,12VDC	TK1689	DS1EMDC12V-H166
A10K108	148-0174-00			RELAY,ARMATURE:1 FORM C,12VDC	TK1689	DS1EMDC12V-H166
A10K109	148-0173-01			RELAY,ARMATURE:1 FORM C,INSERT LOSS 0.3 DB@900MHZ,VSWR 1.5@900MHZ,COIL 12VDC 720 OHM,CONTACT 30VDC 0.5A 10W,PKG .795 X .441	TK1689	RK1EDC12V
A10K110	148-0173-01			RELAY,ARMATURE:1 FORM C,INSERT LOSS 0.3 DB@900MHZ,VSWR 1.5@900MHZ,COIL 12VDC 720 OHM,CONTACT 30VDC 0.5A 10W,PKG .795 X .441	TK1689	RK1EDC12V
A10K111	148-0174-00			RELAY,ARMATURE:1 FORM C,12VDC	TK1689	DS1EMDC12V-H166
A10K112	148-0174-00			RELAY,ARMATURE:1 FORM C,12VDC	TK1689	DS1EMDC12V-H166
A10L101	108-1319-00			INDUCTOR,FIXED:33UH,10%,1.8A	54583	TSL1110-330K 1R
A10L102	108-1319-00			INDUCTOR,FIXED:33UH,10%,1.8A	54583	TSL1110-330K 1R
A10L130	108-0682-00			COIL,RF:FIXED,61NH	0JR03	108-0682-00
A10L140	108-0682-00			COIL,RF:FIXED,61NH	0JR03	108-0682-00
A10L201	108-1319-00			INDUCTOR,FIXED:33UH,10%,1.8A	54583	TSL1110-330K 1R
A10L216	108-1339-00			COIL,RF:FXD,330NH	91637	IR-2.330 MICRO
A10L217	108-1339-00			COIL,RF:FXD,330NH	91637	IR-2.330 MICRO
A10L426	108-1281-00			COIL,RF:FXD,2.2UH,10%	54583	SPTO3O5-2R2K

Component Number	Tektronix Part No.	Serial No. Effective	Dscont	Name & Description	Mfr. Code	Mfr. Part No.
A10L432	108-1341-00			COIL,RF:FXD,180NH,10%,0.1 OHM,1100MA MI AXIAL LEADS	91637	IR-2 0.180 MICR
A10L445	108-1339-00			COIL,RF:FXD,330NH	91637	IR-2.330 MICRO
A10L446	108-1339-00	B100100	B110099	COIL,RF:FXD,330NH (2246 MOD A,2Y)	91637	IR-2.330 MICRO
A10L446	108-1339-00	B700100	B710099	COIL,RF:FXD,330NH (2246 1Y)	91637	IR-2.330 MICRO
A10L462	108-1341-00			COIL,RF:FXD,180NH,10%,0.1 OHM,1100MA MI AXIAL LEADS	91637	IR-2 0.180 MICR
A10L475	108-1339-00			COIL,RF:FXD,330NH	91637	IR-2.330 MICRO
A10L476	108-1339-00	B100100	B110099	COIL,RF:FXD,330NH (2246 MOD A,2Y)	91637	IR-2.330 MICRO
A10L476	108-1339-00	B700100	B710099	COIL,RF:FXD,330NH (2246 1Y)	91637	IR-2.330 MICRO
A10L701	108-1339-00			COIL,RF:FXD,330NH	91637	IR-2.330 MICRO
A10L702	108-1339-00			COIL,RF:FXD,330NH	91637	IR-2.330 MICRO
A10L703	120-1688-00			TRANSFORMER,RF:TAPPED INDUCTOR	0JR03	120-1688-00
A10L704	120-1688-00			TRANSFORMER,RF:TAPPED INDUCTOR	0JR03	120-1688-00
A10Q131	151-1042-00			TRANSISTOR,SIG:JFET,N-CH;6V,15MA,4.5MS,IDSS (1-2) < 0.5MA (LOCATIONS A AND B)	04713	SPF627M2
A10Q151	151-1042-00			TRANSISTOR,SIG:JFET,N-CH;6V,15MA,4.5MS,IDSS (1-2) < 0.5MA (LOCATIONS A AND B)	04713	SPF627M2
A10Q171	151-0164-00			TRANSISTOR,SIG:BIPOLAR,PNP;60V,600MA200MHZ AMPLIFIER	04713	MPS2907A
A10Q181	151-0712-00	B110100		TRANSISTOR,SIG:BIPOLAR,PNP;20V,50MA,600MHZ AMPLIFIER (2246 MOD A)	04713	MPSH81
A10Q181	151-0712-00	B710100		TRANSISTOR,SIG:BIPOLAR,PNP;20V,50MA,600MHZ AMPLIFIER (2246 1Y)	04713	MPSH81
A10Q182	151-0712-00	B110100		TRANSISTOR,SIG:BIPOLAR,PNP;20V,50MA,600MHZ AMPLIFIER (2246 MOD A)	04713	MPSH81
A10Q182	151-0712-00	B710100		TRANSISTOR,SIG:BIPOLAR,PNP;20V,50MA,600MHZ AMPLIFIER (2246 1Y)	04713	MPSH81
A10Q250	151-0712-00			TRANSISTOR,SIG:BIPOLAR,PNP;20V,50MA,600MHZ AMPLIFIER	04713	MPSH81
A10Q251	151-0712-00			TRANSISTOR,SIG:BIPOLAR,PNP;20V,50MA,600MHZ AMPLIFIER	04713	MPSH81
A10Q252	151-0271-05			TRANSISTOR,SIG:BIPOLAR,PNP;15V,30MA,2.0GHZ, AMPLIFIER	04713	MPSH69RLRP
A10Q253	151-0271-05			TRANSISTOR,SIG:BIPOLAR,PNP;15V,30MA,2.0GHZ, AMPLIFIER	04713	MPSH69RLRP
A10Q284	151-0192-05			TRANSISTOR:NPN,SI,TO-92	04713	SPS8801RLRP
A10Q285	151-0192-05			TRANSISTOR:NPN,SI,TO-92	04713	SPS8801RLRP

Component Number	Tektronix Part No.	Serial No. Effective	Serial No. Dscont	Name & Description	Mfr. Code	Mfr. Part No.
A10Q301	151-0254-03			TRANSISTOR,SIG:BIPOLAR,NPN;30V,500MA, 125MHZ,AMPLIFIER,DARLINGTON	0JR04	MPSA14, TPE2
A10Q302	151-0188-00			TRANSISTOR,SIG:BIPOLAR,PNP;40V,200MA, 250MHZ,AMPLIFIER	04713	2N3906
A10Q303	151-0188-00			TRANSISTOR,SIG:BIPOLAR,PNP;40V,200MA, 250MHZ,AMPLIFIER	04713	2N3906
A10Q304	151-0830-00			TRANSISTOR:NPN,SI,AMPLIFIER,625,TO-92 MPS918	80009	151083000
A10Q305	151-0830-00			TRANSISTOR:NPN,SI,AMPLIFIER,625,TO-92 MPS918	80009	151083000
A10Q306	151-0830-00			TRANSISTOR:NPN,SI,AMPLIFIER,625,TO-92 MPS918	80009	151083000
A10Q307	151-0829-00			TRANSISTOR:PNP,SI,TO-92	04713	2N5087RLRP
A10Q308	151-0830-00			TRANSISTOR:NPN,SI,AMPLIFIER,625,TO-92 MPS918	80009	151083000
A10Q309	151-0830-00			TRANSISTOR:NPN,SI,AMPLIFIER,625,TO-92 MPS918	80009	151083000
A10Q310	151-1042-00			TRANSISTOR,SIG:JFET,N-CH;6V,15MA,4.5MS,IDSS (1-2) < 0.5MA (LOCATIONS A AND B)	04713	SPF627M2
A10Q311	151-0188-00			TRANSISTOR,SIG:BIPOLAR,PNP;40V,200MA, 250MHZ,AMPLIFIER	04713	2N3906
A10Q312	151-0188-00			TRANSISTOR,SIG:BIPOLAR,PNP;40V,200MA, 250MHZ,AMPLIFIER	04713	2N3906
A10Q313	151-0736-00			TRANSISTOR:NPN,SI,TO-92	0JR04	2N4401
A10Q315	151-0188-00			TRANSISTOR,SIG:BIPOLAR,PNP;40V,200MA, 250MHZ,AMPLIFIER	04713	2N3906
A10Q316	151-0188-00			TRANSISTOR,SIG:BIPOLAR,PNP;40V,200MA, 250MHZ,AMPLIFIER	04713	2N3906
A10Q317	151-0830-00			TRANSISTOR:NPN,SI,AMPLIFIER,625,TO-92 MPS918	80009	151083000
A10Q318	151-0830-00			TRANSISTOR:NPN,SI,AMPLIFIER,625,TO-92 MPS918	80009	151083000
A10Q320	151-0829-00			TRANSISTOR:PNP,SI,TO-92	04713	2N5087RLRP
A10Q321	151-0830-00			TRANSISTOR:NPN,SI,AMPLIFIER,625,TO-92 MPS918	80009	151083000
A10Q322	151-0830-00			TRANSISTOR:NPN,SI,AMPLIFIER,625,TO-92 MPS918	80009	151083000
A10Q323	151-1042-00			TRANSISTOR,SIG:JFET,N-CH;6V,15MA,4.5MS,IDSS (1-2) < 0.5MA (LOCATION A AND B)	04713	SPF627M2
A10Q325	151-0188-00			TRANSISTOR,SIG:BIPOLAR,PNP;40V,200MA, 250MHZ,AMPLIFIER	04713	2N3906
A10Q326	151-0736-00			TRANSISTOR:NPN,SI,TO-92	0JR04	2N4401
A10Q328	151-0829-00			TRANSISTOR:PNP,SI,TO-92	04713	2N5087RLRP
A10Q329	151-0829-00			TRANSISTOR:PNP,SI,TO-92	04713	2N5087RLRP
A10Q330	151-0829-00			TRANSISTOR:PNP,SI,TO-92	04713	2N5087RLRP
A10Q331	151-0829-00			TRANSISTOR:PNP,SI,TO-92	04713	2N5087RLRP
A10Q332	151-0736-00			TRANSISTOR:NPN,SI,TO-92	0JR04	2N4401
A10Q333	151-0736-00			TRANSISTOR:NPN,SI,TO-92	0JR04	2N4401
A10Q440	151-0188-00			TRANSISTOR,SIG:BIPOLAR,PNP;40V,200MA, 250MHZ,AMPLIFIER	04713	2N3906

Component Number	Tektronix Part No.	Serial No. Effective	Dscont	Name & Description	Mfr. Code	Mfr. Part No.
A10Q444	151-0190-00			TRANSISTOR,SIG:BIPOLAR,NPN;40V,200MA, 300MHZ,AMPLIFIER	04713	2N3904
A10Q470	151-0188-00			TRANSISTOR,SIG:BIPOLAR,PNP;40V,200MA, 250MHZ,AMPLIFIER	04713	2N3906
A10Q474	151-0190-00			TRANSISTOR,SIG:BIPOLAR,NPN;40V,200MA, 300MHZ,AMPLIFIER	04713	2N3904
A10Q480	151-0188-00			TRANSISTOR,SIG:BIPOLAR,PNP;40V,200MA, 250MHZ,AMPLIFIER	04713	2N3906
A10Q600	151-0188-00			TRANSISTOR,SIG:BIPOLAR,PNP;40V,200MA, 250MHZ,AMPLIFIER	04713	2N3906
A10Q601	151-0424-00			TRANSISTOR:NPN,SI,TO-92	04713	MPS2369A
A10Q602	151-0188-00			TRANSISTOR,SIG:BIPOLAR,PNP;40V,200MA, 250MHZ,AMPLIFIER	04713	2N3906
A10Q603	151-0188-00			TRANSISTOR,SIG:BIPOLAR,PNP;40V,200MA, 250MHZ,AMPLIFIER	04713	2N3906
A10Q604	151-0188-00			TRANSISTOR,SIG:BIPOLAR,PNP;40V,200MA, 250MHZ,AMPLIFIER	04713	2N3906
A10Q605	151-0188-00			TRANSISTOR,SIG:BIPOLAR,PNP;40V,200MA, 250MHZ,AMPLIFIER	04713	2N3906
A10Q606	151-0188-00			TRANSISTOR,SIG:BIPOLAR,PNP;40V,200MA, 250MHZ,AMPLIFIER	04713	2N3906
A10Q607	151-0188-00			TRANSISTOR,SIG:BIPOLAR,PNP;40V,200MA, 250MHZ,AMPLIFIER	04713	2N3906
A10Q608	151-0190-00			TRANSISTOR,SIG:BIPOLAR,NPN;40V,200MA, 300MHZ,AMPLIFIER	04713	2N3904
A10Q701	151-0846-00			TRANSISTOR,SIG:BIPOLAR,NPN;30V,400MA, 800MHZ,AMPLIFIER,COMMON BASE PKG	04713	SRF5286
A10Q702	151-0846-00			TRANSISTOR,SIG:BIPOLAR,NPN;30V,400MA, 800MHZ,AMPLIFIER,COMMON BASE PKG	04713	SRF5286
A10Q703	151-0190-00			TRANSISTOR,SIG:BIPOLAR,NPN;40V,200MA, 300MHZ,AMPLIFIER	04713	2N3904
A10Q704	151-0190-00			TRANSISTOR,SIG:BIPOLAR,NPN;40V,200MA, 300MHZ,AMPLIFIER	04713	2N3904
A10Q801	151-1212-00	B100100	B110099	TRANSISTOR,PWR:MOS,P-CH;160V,0.25A,25 OHM (2246 MOD A,2Y)	59640	VP0116N2
A10Q801	151-0270-00	B110100		TRANSISTOR:PNP,SI,TO-39 (2246 MOD A,2Y)	04713	ST919
A10Q801	151-1212-00	B700100	B710099	TRANSISTOR,PWR:MOS,P-CH;160V,0.25A,25 OHM (2246 1Y)	59640	VP0116N2
A10Q801	151-0270-00	B710100		TRANSISTOR:PNP,SI,TO-39 (2246 1Y)	04713	ST919
A10Q802	151-1211-00	B100100	B110099	TRANSISTOR,PWR:MOS,N-CH;160V,0.25A,40 OHM (2246 MOD A,2Y)	59640	VN1316N2
A10Q802	151-0274-00	B110100		TRANSISTOR:NPN,SI,TO-5 (2246 MOD A,2Y)	04713	2N3501
A10Q802	151-1211-00	B700100	B710099	TRANSISTOR,PWR:MOS,N-CH;160V,0.25A,40 OHM (2246 1Y)	59640	VN1316N2
A10Q802	151-0274-00	B710100		TRANSISTOR:NPN,SI,TO-5 (2246 1Y)	04713	2N3501

Component Number	Tektronix Part No.	Serial No. Effective	Serial No. Dscont	Name & Description	Mfr. Code	Mfr. Part No.
A10Q803	151-0736-00	B100100	B110099	TRANSISTOR:NPN,SI,TO-92 (2246 MOD A,2Y)	0JR04	2N4401
A10Q803	151-0190-00	B110100		TRANSISTOR,SIG:BIPOLAR,NPN;40V,200MA, 300MHZ,AMPLIFIER (2246 MOD A,2Y)	04713	2N3904
A10Q803	151-0736-00	B700100	B710099	TRANSISTOR:NPN,SI,TO-92 (2246 1Y)	0JR04	2N4401
A10Q803	151-0190-00	B710100		TRANSISTOR,SIG:BIPOLAR,NPN;40V,200MA, 300MHZ,AMPLIFIER (2246 1Y)	04713	2N3904
A10Q804	151-0712-00	B100100	B110099	TRANSISTOR,SIG:BIPOLAR,PNP;20V,50MA,600MHZ AMPLIFIER (2246 MOD A,2Y)	04713	MPSH81
A10Q804	151-0190-00	B110100		TRANSISTOR,SIG:BIPOLAR,NPN;40V,200MA, 300MHZ,AMPLIFIER (2246 MOD A,2Y)	04713	2N3904
A10Q804	151-0712-00	B700100	B710099	TRANSISTOR,SIG:BIPOLAR,PNP;20V,50MA,600MHZ AMPLIFIER (2246 1Y)	04713	MPSH81
A10Q804	151-0190-00	B710100		TRANSISTOR,SIG:BIPOLAR,NPN;40V,200MA, 300MHZ,AMPLIFIER (2246 1Y)	04713	2N3904
A10Q805	151-1211-00	B100100	B110099	TRANSISTOR,PWR:MOS,N-CH;160V,0.25A,40 OHM (2246 MOD A,2Y)	59640	VN1316N2
A10Q805	151-0270-00	B110100		TRANSISTOR:PNP,SI,TO-39 (2246 MOD A,2Y)	04713	ST919
A10Q805	151-1211-00	B700100	B710099	TRANSISTOR,PWR:MOS,N-CH;160V,0.25A,40 OHM (2246 1Y)	59640	VN1316N2
A10Q805	151-0270-00	B710100		TRANSISTOR:PNP,SI,TO-39 (2246 1Y)	04713	ST919
A10Q806	151-1212-00	B100100	B110099	TRANSISTOR,PWR:MOS,P-CH;160V,0.25A,25 OHM (2246 MOD A,2Y)	59640	VP0116N2
A10Q806	151-0274-00	B110100		TRANSISTOR:NPN,SI,TO-5 (2246 MOD A,2Y)	04713	2N3501
A10Q806	151-1212-00	B700100	B710099	TRANSISTOR,PWR:MOS,P-CH;160V,0.25A,25 OHM (2246 1Y)	59640	VP0116N2
A10Q806	151-0274-00	B710100		TRANSISTOR:NPN,SI,TO-5 (2246 1Y)	04713	2N3501
A10Q807	151-0164-00			TRANSISTOR,SIG:BIPOLAR,PNP;60V,600MA, 200MHZ,AMPLIFIER	04713	MPS2907A
A10Q808	151-0711-00	B100100	B110099	TRANSISTOR,SIG:BIPOLAR,NPN;25V,50MA,650MHZ AMPLIFIER (2246 MOD A,2Y)	04713	MPSH10
A10Q808	151-0711-00	B700100	B710099	TRANSISTOR,SIG:BIPOLAR,NPN;25V,50MA,650MHZ AMPLIFIER (2246 1Y)	04713	MPSH10
A10Q809	151-0711-00			TRANSISTOR,SIG:BIPOLAR,NPN;25V,50MA,650MHZ AMPLIFIER	04713	MPSH10

Component Number	Tektronix Part No.	Serial No. Effective	Dscont	Name & Description	Mfr. Code	Mfr. Part No.
A10Q810	151-0711-00			TRANSISTOR,SIG:BIPOLAR,NPN;25V,50MA,650MHZ AMPLIFIER	04713	MPSH10
A10Q811	151-0190-00	B110100		TRANSISTOR,SIG:BIPOLAR,NPN;40V,200MA, 300MHZ,AMPLIFIER (2246 MOD A,2Y)	04713	2N3904
A10Q811	151-0190-00	B710100		TRANSISTOR,SIG:BIPOLAR,NPN;40V,200MA, 300MHZ,AMPLIFIER (2246 1Y)	04713	2N3904
A10Q812	151-0220-00	B110100		TRANSISTOR,SIG:BIPOLAR,PNP;40V,200MA, 400MHZ,AMPLIFIER (2246 MOD A,2Y)	2D532	PTBTC105BK
A10Q812	151-0220-00	B710100		TRANSISTOR,SIG:BIPOLAR,PNP;40V,200MA, 400MHZ,AMPLIFIER (2246 1Y)	2D532	PTBTC105BK
A10Q905	151-0622-00			TRANSISTOR:PNP,SI,40V,1A,TO-226AE/237 2N6727	04713	MPS6727
A10Q907	151-0622-00			TRANSISTOR:PNP,SI,40V,1A,TO-226AE/237 2N6727	04713	MPS6727
A10Q908	151-0622-00			TRANSISTOR:PNP,SI,40V,1A,TO-226AE/237 2N6727	04713	MPS6727
A10Q1001	151-0424-00			TRANSISTOR:NPN,SI,TO-92	04713	MPS2369A
A10Q1002	151-0424-00			TRANSISTOR:NPN,SI,TO-92	04713	MPS2369A
A10Q1003	151-0424-00			TRANSISTOR:NPN,SI,TO-92	04713	MPS2369A
A10Q1004	151-0424-00			TRANSISTOR:NPN,SI,TO-92	04713	MPS2369A
A10Q1005	151-0216-04			TRANSISTOR,SIG:BIPOLAR,PNP;25V,100MA, 170MHZ,AMPLIFIER	04713	MPS6523RLRP
A10Q1101	151-0216-04			TRANSISTOR,SIG:BIPOLAR,PNP;25V,100MA, 170MHZ,AMPLIFIER	04713	MPS6523RLRP
A10Q1102	151-0192-05			TRANSISTOR:NPN,SI,TO-92	04713	SPS8801RLRP
A10Q1103	151-0216-04			TRANSISTOR,SIG:BIPOLAR,PNP;25V,100MA, 170MHZ,AMPLIFIER	04713	MPS6523RLRP
A10Q1104	151-0192-05			TRANSISTOR:NPN,SI,TO-92	04713	SPS8801RLRP
A10Q1105	151-0216-04			TRANSISTOR,SIG:BIPOLAR,PNP;25V,100MA, 170MHZ,AMPLIFIER	04713	MPS6523RLRP
A10Q1106	151-0192-05			TRANSISTOR:NPN,SI,TO-92	04713	SPS8801RLRP
A10Q2701	151-0164-00			TRANSISTOR,SIG:BIPOLAR,PNP;60V,600MA, 200MHZ,AMPLIFIER	04713	MPS2907A
A10Q2702	151-0164-00			TRANSISTOR,SIG:BIPOLAR,PNP;60V,600MA, 200MHZ,AMPLIFIER	04713	MPS2907A
A10Q2703	151-0736-00			TRANSISTOR:NPN,SI,TO-92	0JR04	2N4401
A10Q2704	151-0736-00			TRANSISTOR:NPN,SI,TO-92	0JR04	2N4401
A10Q2705	151-0192-05			TRANSISTOR:NPN,SI,TO-92	04713	SPS8801RLRP
A10Q2706	151-0190-00			TRANSISTOR,SIG:BIPOLAR,NPN;40V,200MA, 300MHZ,AMPLIFIER	04713	2N3904
A10Q2707	151-0190-00			TRANSISTOR,SIG:BIPOLAR,NPN;40V,200MA, 300MHZ,AMPLIFIER	04713	2N3904
A10Q2708	151-0188-00			TRANSISTOR,SIG:BIPOLAR,PNP;40V,200MA, 250MHZ,AMPLIFIER	04713	2N3906
A10Q2709	151-0188-00			TRANSISTOR,SIG:BIPOLAR,PNP;40V,200MA, 250MHZ,AMPLIFIER	04713	2N3906
A10Q2711	151-0199-00			TRANSISTOR,SIG:BIPOLAR,PNP;12V,80MA, SWITCHING	04713	MPS3640
A10Q2712	151-0347-02			TRANSISTOR,SIG:BIPOLAR,NPN;160V,600MA, 100MHZ,AMPLIFIER	04713	2N5551 RLRP (AM
A10Q2713	151-0350-00			TRANSISTOR,SIG:BIPOLAR,PNP;150V,600MA, 100MHZ,AMPLIFIER	0JR04	TO BE ASSIGNED

Component Number	Tektronix Part No.	Serial No. Effective	Serial No. Dscont	Name & Description	Mfr. Code	Mfr. Part No.
A10Q2715	151-0190-00			TRANSISTOR,SIG:BIPOLAR,NPN;40V,200MA, 300MHZ,AMPLIFIER	04713	2N3904
A10R101	313-1822-00			RES,FXD,FILM:8.2K,OHM,5%,0.2W	91637	CCF50-2-82000J
A10R102	313-1822-00			RES,FXD,FILM:8.2K,OHM,5%,0.2W	91637	CCF50-2-82000J
A10R103	313-1822-00			RES,FXD,FILM:8.2K,OHM,5%,0.2W	91637	CCF50-2-82000J
A10R104	313-1822-00			RES,FXD,FILM:8.2K,OHM,5%,0.2W	91637	CCF50-2-82000J
A10R105	313-1103-00			RES,FXD,FILM:10K OHM,5%,0.2W	91637	CCF50-2-10001J
A10R106	313-1103-00			RES,FXD,FILM:10K OHM,5%,0.2W	91637	CCF50-2-10001J
A10R107	313-1103-00			RES,FXD,FILM:10K OHM,5%,0.2W	91637	CCF50-2-10001J
A10R108	313-1103-00			RES,FXD,FILM:10K OHM,5%,0.2W	91637	CCF50-2-10001J
A10R111	315-0620-00			RES,FXD,FILM:62 OHM,5%,0.25W	TK1727	SFR25 2322-181-
A10R113	313-1200-00			RES,FXD,FILM:20 OHM,5%,0.2W	91637	CCF50-2-20R00J
A10R114	313-1100-00			RES,FXD,FILM:10 OHM,5%,0.2W	91637	CCF50-2-10R00J
A10R115	322-3085-00			RES,FXD,FILM:75 OHM,1%,0.2W,TC=T0	91637	CCF501G75R00F
A10R121	315-0620-00			RES,FXD,FILM:62 OHM,5%,0.25W	TK1727	SFR25 2322-181-
A10R123	313-1200-00			RES,FXD,FILM:20 OHM,5%,0.2W	91637	CCF50-2-20R00J
A10R124	313-1100-00			RES,FXD,FILM:10 OHM,5%,0.2W	91637	CCF50-2-10R00J
A10R125	322-3085-00			RES,FXD,FILM:75 OHM,1%,0.2W,TC=T0	91637	CCF501G75R00F
A10R131	315-0390-00	B100100	B119999	RES,FXD,FILM:39 OHM,5%,0.25W (2246 MOD A,2Y)	TK1727	SFR25 2322-181-
A10R131	315-0620-00	B120000		RES,FXD,FILM:62 OHM,5%,0.25W (2246 MOD A,2Y)	TK1727	SFR25 2322-181-
A10R131	315-0390-00	B700100	B714999	RES,FXD,FILM:39 OHM,5%,0.25W (2246 1Y)	TK1727	SFR25 2322-181-
A10R131	315-0620-00	B715000		RES,FXD,FILM:62 OHM,5%,0.25W (2246 1Y)	TK1727	SFR25 2322-181-
A10R132	322-3443-00			RES,FXD,FILM:402K OHM,1%,0.2W,TC=T0MI	91637	CCF501G40202F
A10R133	322-3443-00			RES,FXD,FILM:402K OHM,1%,0.2W,TC=T0MI	91637	CCF501G40202F
A10R134	322-3414-00			RES,FXD,FILM:200K OHM,1%,0.2W,TC=T0MI	91637	CCF501G20002F
A10R135	313-1100-00			RES,FXD,FILM:10 OHM,5%,0.2W	91637	CCF50-2-10R00J
A10R136	322-3284-00			RES,FXD,FILM:8.87K OHM,1%,0.2W,TC=T0MI	91637	CCF501G88700F
A10R137	322-3217-00			RES,FXD,FILM:1.78K OHM,1%,0.2W,TC=T0	91637	CCF501G17800F
A10R138	322-3210-00			RES,FXD,FILM:1.5K OHM,1%,0.2W,TC=T0	91637	CCF501G15000F
A10R139	322-3085-00			RES,FXD,FILM:75 OHM,1%,0.2W,TC=T0	91637	CCF501G75R00F
A10R140	322-3085-00			RES,FXD,FILM:75 OHM,1%,0.2W,TC=T0	91637	CCF501G75R00F
A10R141	311-2224-00			RES,VAR,NONWW:TRMR,20 OHM,20%,0.5W LINEAR	TK2073	GF06UT2 200 M L
A10R142	322-3056-00			RES,FXD,FILM:37.4 OHM,1%,0.2W,TC=T0MI	91637	CCF50-2F37R40F
A10R151	315-0390-00	B100100	B119999	RES,FXD,FILM:39 OHM,5%,0.25W (2246 MOD A,2Y)	TK1727	SFR25 2322-181-
A10R151	315-0620-00	B120000		RES,FXD,FILM:62 OHM,5%,0.25W (2246 MOD A,2Y)	TK1727	SFR25 2322-181-
A10R151	315-0390-00	B700100	B714999	RES,FXD,FILM:39 OHM,5%,0.25W (2246 1Y)	TK1727	SFR25 2322-181-

Component Number	Tektronix Part No.	Serial No. Effective	Dscont	Name & Description	Mfr. Code	Mfr. Part No.
A10R151	315-0620-00	B715000		RES,FXD,FILM:62 OHM,5%,0.25W (2246 1Y)	TK1727	SFR25 2322-181-
A10R152	322-3443-00			RES,FXD,FILM:402K OHM,1%,0.2W,TC=T0MI	91637	CCF501G40202F
A10R153	322-3443-00			RES,FXD,FILM:402K OHM,1%,0.2W,TC=T0MI	91637	CCF501G40202F
A10R154	322-3414-00			RES,FXD,FILM:200K OHM,1%,0.2W,TC=T0MI	91637	CCF501G20002F
A10R155	313-1100-00			RES,FXD,FILM:10 OHM,5%,0.2W	91637	CCF50-2-10R00J
A10R156	322-3284-00			RES,FXD,FILM:8.87K OHM,1%,0.2W,TC=T0MI	91637	CCF501G88700F
A10R157	322-3217-00			RES,FXD,FILM:1.78K OHM,1%,0.2W,TC=T0	91637	CCF501G17800F
A10R158	322-3210-00			RES,FXD,FILM:1.5K OHM,1%,0.2W,TC=T0	91637	CCF501G15000F
A10R159	322-3085-00			RES,FXD,FILM:75 OHM,1%,0.2W,TC=T0	91637	CCF501G75R00F
A10R160	322-3085-00			RES,FXD,FILM:75 OHM,1%,0.2W,TC=T0	91637	CCF501G75R00F
A10R161	311-2224-00			RES,VAR,NONWW:TRMR,20 OHM,20%,0.5W LINEAR	TK2073	GF06UT2 200 M L
A10R162	322-3056-00			RES,FXD,FILM:37.4 OHM,1%,0.2W,TC=T0MI	91637	CCF50-2F37R40F
A10R171	313-1471-00			RES,FXD,FILM:470 OHM,5%,0.2W	91637	CCF50-2-470R0J
A10R175	313-1204-00			RES,FXD,FILM:200K,5%,0.2W	91637	CCF50-2-20002J
A10R176	313-1103-00			RES,FXD,FILM:10K OHM,5%,0.2W	91637	CCF50-2-10001J
A10R177	313-1472-00			RES,FXD,FILM:4.7K OHM,5%,0.2W	91637	CCF50-2-47000J
A10R178	313-1472-00			RES,FXD,FILM:4.7K OHM,5%,0.2W	91637	CCF50-2-47000J
A10R179	313-1103-00			RES,FXD,FILM:10K OHM,5%,0.2W	91637	CCF50-2-10001J
A10R180	313-1101-00			RES,FXD,FILM:100 OHM,5%,0.2W	91637	CCF50-2-100R0J
A10R181	313-1101-00			RES,FXD,FILM:100 OHM,5%,0.2W	91637	CCF50-2-100R0J
A10R182	308-0058-00			RES,FXD,WW:1.5 OHM,10%,1W	75042	SP-20-1R500K
A10R185	313-1512-00	B110100		RES,FXD,FILM:5.1K OHM,5%,0.2W (2246 MOD A,2Y)	91637	CCF50-2-51000J
A10R185	313-1512-00	B710100		RES,FXD,FILM:5.1K OHM,5%,0.2W (2246 1Y)	91637	CCF50-2-51000J
A10R188	313-1512-00	B110100		RES,FXD,FILM:5.1K OHM,5%,0.2W (2246 MOD A,2Y)	91637	CCF50-2-51000J
A10R188	313-1512-00	B710100		RES,FXD,FILM:5.1K OHM,5%,0.2W (2246 1Y)	91637	CCF50-2-51000J
A10R201	322-3193-00			RES,FXD,FILM:1K OHM,1%,0.2W,TC=T0	91637	CCF501G10000F
A10R202	322-3193-00			RES,FXD,FILM:1K OHM,1%,0.2W,TC=T0	91637	CCF501G10000F
A10R203	322-3193-00			RES,FXD,FILM:1K OHM,1%,0.2W,TC=T0	91637	CCF501G10000F
A10R204	322-3193-00			RES,FXD,FILM:1K OHM,1%,0.2W,TC=T0	91637	CCF501G10000F
A10R205	322-3150-00			RES,FXD,FILM:357 OHM,1%,0.2W,TC=T0MI	91637	CCF501G357R0F
A10R206	322-3236-00			RES,FXD,FILM:2.8K OHM,1%,0.2W,TC=T0MI	91637	CCF501G28000F
A10R207	322-3150-00			RES,FXD,FILM:357 OHM,1%,0.2W,TC=T0MI	91637	CCF501G357R0F
A10R208	313-1100-00			RES,FXD,FILM:10 OHM,5%,0.2W	91637	CCF50-2-10R00J
A10R209	313-1511-00			RES,FXD,FILM:510 OHM,5%,0.2W	91637	CCF50-2-510ROJ
A10R210	313-1331-00			RES,FXD,FILM:330 OHM,5%,0.2W	91637	CCF50-2-330ROJ
A10R211	311-2329-00	B100100	B110099	RES,VAR,NONWW:TRIMMER,5K OHM,10% (2246 MOD A,2Y)	32997	3386R-EA5-502
A10R211	311-2454-00	B110100	B119999	RES,VAR,NONWW:TRMR,5K OHM,20%,0.5W,LOG (2246 MOD A,2Y)	32997	3362U-EP6-502R
A10R211	311-2232-00	B120000		RES,VAR,NONWW:TRMR,2K OHM,20%,0.5W LINEAR (2246 MOD A,2Y)	TK2073	GF06UT2 202 M L

Component Number	Tektronix Part No.	Serial No. Effective	Serial No. Dscont	Name & Description	Mfr. Code	Mfr. Part No.
A10R211	311-2329-00	B700100	B710099	RES,VAR,NONWW:TRIMMER,5K OHM,10% (2246 1Y)	32997	3386R-EA5-502
A10R211	311-2454-00	B710100	B714999	RES,VAR,NONWW:TRMR,5K OHM,20%,0.5W,LOG (2246 1Y)	32997	3362U-EP6-502R
A10R211	311-2232-00	B715000		RES,VAR,NONWW:TRMR,2K OHM,20%,0.5W LINEAR (2246 1Y)	TK2073	GF06UT2 202 M L
A10R212	313-1511-00			RES,FXD,FILM:510 OHM,5%,0.2W	91637	CCF50-2-510ROJ
A10R213	313-1243-00			RES,FXD,FILM:24K OHM,5%,0.2W	57668	CCF50-1-G2402J
A10R214	322-3285-00			RES,FXD,FILM:9.09K OHM,1%,0.2W,TC=T0MI	91637	CCF501G90900F
A10R215	313-1821-00			RES,FXD,FILM:820 OHM,5%,0.2W	91637	CCF50-2-820R0J
A10R216	313-1103-00	B120000		RES,FXD,FILM:10K OHM,5%,0.2W (2246 MOD A,2Y)	91637	CCF50-2-10001J
A10R216	313-1103-00	B715000		RES,FXD,FILM:10K OHM,5%,0.2W (2246 1Y)	91637	CCF50-2-10001J
A10R217	313-1472-00	B120000		RES,FXD,FILM:4.7K OHM,5%,0.2W (2246 MOD A,2Y)	91637	CCF50-2-47000J
A10R217	313-1472-00	B715000		RES,FXD,FILM:4.7K OHM,5%,0.2W (2246 1Y)	91637	CCF50-2-47000J
A10R218	322-3237-00			RES,FXD,FILM:2.87K OHM,1%,0.2W,TC=T0MI	91637	CCF501G28700F
A10R219	313-1103-00			RES,FXD,FILM:10K OHM,5%,0.2W	91637	CCF50-2-10001J
A10R220	313-1331-00			RES,FXD,FILM:330 OHM,5%,0.2W	91637	CCF50-2-330ROJ
A10R221	311-2329-00	B100100	B110099	RES,VAR,NONWW:TRIMMER,5K OHM,10% (2246 MOD A,2Y)	32997	3386R-EA5-502
A10R221	311-2454-00	B110100	B119999	RES,VAR,NONWW:TRMR,5K OHM,20%,0.5W,LOG (2246 MOD A,2Y)	32997	3362U-EP6-502R
A10R221	311-2232-00	B120000		RES,VAR,NONWW:TRMR,2K OHM,20%,0.5W LINEAR (2246 MOD A,2Y)	TK2073	GF06UT2 202 M L
A10R221	311-2329-00	B700100	B710099	RES,VAR,NONWW:TRIMMER,5K OHM,10% (2246 1Y)	32997	3386R-EA5-502
A10R221	311-2454-00	B710100	B714999	RES,VAR,NONWW:TRMR,5K OHM,20%,0.5W,LOG (2246 1Y)	32997	3362U-EP6-502R
A10R221	311-2232-00	B715000		RES,VAR,NONWW:TRMR,2K OHM,20%,0.5W LINEAR (2246 1Y)	TK2073	GF06UT2 202 M L
A10R222	313-1511-00			RES,FXD,FILM:510 OHM,5%,0.2W	91637	CCF50-2-510ROJ
A10R223	313-1243-00			RES,FXD,FILM:24K OHM,5%,0.2W	57668	CCF50-1-G2402J
A10R224	322-3285-00			RES,FXD,FILM:9.09K OHM,1%,0.2W,TC=T0MI	91637	CCF501G90900F
A10R225	313-1472-00			RES,FXD,FILM:4.7K OHM,5%,0.2W	91637	CCF50-2-47000J
A10R226	313-1027-00			RES,FXD,FILM:2.7 OHM,5%,0.2W	57668	TR20JE 02E7
A10R227	313-1472-00			RES,FXD,FILM:4.7K OHM,5%,0.2W	91637	CCF50-2-47000J
A10R228	322-3237-00			RES,FXD,FILM:2.87K OHM,1%,0.2W,TC=T0MI	91637	CCF501G28700F
A10R229	313-1104-00			RES,FXD,FILM:100K OHM,5%,0.2W	91637	CCF50-2-10002J
A10R230	313-1331-00			RES,FXD,FILM:330 OHM,5%,0.2W	91637	CCF50-2-330ROJ
A10R231	311-2329-00	B100100	B110099	RES,VAR,NONWW:TRIMMER,5K OHM,10% (2246 MOD A,2Y)	32997	3386R-EA5-502

Component Number	Tektronix Part No.	Serial No. Effective	Serial No. Dscont	Name & Description	Mfr. Code	Mfr. Part No.
A10R231	311-2454-00	B110100	B119999	RES,VAR,NONWW:TRMR,5K OHM,20%,0.5W,LOG (2246 MOD A,2Y)	32997	3362U-EP6-502R
A10R231	311-2232-00	B120000		RES,VAR,NONWW:TRMR,2K OHM,20%,0.5W LINEAR (2246 MOD A,2Y)	TK2073	GF06UT2 202 M L
A10R231	311-2329-00	B700100	B710099	RES,VAR,NONWW:TRIMMER,5K OHM,10% (2246 1Y)	32997	3386R-EA5-502
A10R231	311-2454-00	B710100	B714999	RES,VAR,NONWW:TRMR,5K OHM,20%,0.5W,LOG (2246 1Y)	32997	3362U-EP6-502R
A10R231	311-2232-00	B715000		RES,VAR,NONWW:TRMR,2K OHM,20%,0.5W LINEAR (2246 1Y)	TK2073	GF06UT2 202 M L
A10R232	313-1511-00			RES,FXD,FILM:510 OHM,5%,0.2W	91637	CCF50-2-510ROJ
A10R233	313-1243-00			RES,FXD,FILM:24K OHM,5%,0.2W	57668	CCF50-1-G2402J
A10R234	322-3285-00			RES,FXD,FILM:9.09K OHM,1%,0.2W,TC=T0MI	91637	CCF501G90900F
A10R235	322-3237-00			RES,FXD,FILM:2.87K OHM,1%,0.2W,TC=T0MI	91637	CCF501G28700F
A10R238	313-1100-00			RES,FXD,FILM:10 OHM,5%,0.2W	91637	CCF50-2-10R00J
A10R240	313-1331-00			RES,FXD,FILM:330 OHM,5%,0.2W	91637	CCF50-2-330ROJ
A10R241	311-2329-00	B100100	B110099	RES,VAR,NONWW:TRIMMER,5K OHM,10% (2246 MOD A,2Y)	32997	3386R-EA5-502
A10R241	311-2454-00	B110100	B119999	RES,VAR,NONWW:TRMR,5K OHM,20%,0.5W,LOG (2246 MOD A,2Y)	32997	3362U-EP6-502R
A10R241	311-2232-00	B120000		RES,VAR,NONWW:TRMR,2K OHM,20%,0.5W LINEAR (2246 MOD A,2Y)	TK2073	GF06UT2 202 M L
A10R241	311-2329-00	B700100	B710099	RES,VAR,NONWW:TRIMMER,5K OHM,10% (2246 1Y)	32997	3386R-EA5-502
A10R241	311-2454-00	B710100	B714999	RES,VAR,NONWW:TRMR,5K OHM,20%,0.5W,LOG (2246 1Y)	32997	3362U-EP6-502R
A10R241	311-2232-00	B715000		RES,VAR,NONWW:TRMR,2K OHM,20%,0.5W LINEAR (2246 1Y)	TK2073	GF06UT2 202 M L
A10R242	313-1511-00			RES,FXD,FILM:510 OHM,5%,0.2W	91637	CCF50-2-510ROJ
A10R243	313-1243-00			RES,FXD,FILM:24K OHM,5%,0.2W	57668	CCF50-1-G2402J
A10R244	322-3285-00			RES,FXD,FILM:9.09K OHM,1%,0.2W,TC=T0MI	91637	CCF501G90900F
A10R245	313-1027-00			RES,FXD,FILM:2.7 OHM,5%,0.2W	57668	TR20JE 02E7
A10R248	322-3237-00			RES,FXD,FILM:2.87K OHM,1%,0.2W,TC=T0MI	91637	CCF501G28700F
A10R249	313-1027-00	B120000		RES,FXD,FILM:2.7 OHM,5%,0.2W (2246 MOD A,2Y)	57668	TR20JE 02E7
A10R249	313-1027-00	B715000		RES,FXD,FILM:2.7 OHM,5%,0.2W (2246 1Y)	57668	TR20JE 02E7
A10R250	307-0792-00	B100100	B119999	RES NTWK,FXD,FI:7,82 OHM,2%,0.15W EACH (2246 MOD A,2Y)	91637	MSP08A01820G OR
A10R250	307-0792-00	B700100	B714999	RES NTWK,FXD,FI:7,82 OHM,2%,0.15W EACH (2246 1Y)	91637	MSP08A01820G OR
A10R251	307-0792-00	B100100	B119999	RES NTWK,FXD,FI:7,82 OHM,2%,0.15W EACH (2246 MOD A,2Y)	91637	MSP08A01820G OR
A10R251	307-0792-00	B700100	B714999	RES NTWK,FXD,FI:7,82 OHM,2%,0.15W EACH (2246 1Y)	91637	MSP08A01820G OR
A10R254	322-3318-00			RES,FXD,FILM:20K OHM,1%,0.2W,TC=T0	91637	CCF501G20001F
A10R255	322-3318-00			RES,FXD,FILM:20K OHM,1%,0.2W,TC=T0	91637	CCF501G20001F

Component Number	Tektronix Part No.	Serial No. Effective	Serial No. Dscont	Name & Description	Mfr. Code	Mfr. Part No.
A10R256	313-1103-00			RES,FXD,FILM:10K OHM,5%,0.2W	91637	CCF50-2-10001J
A10R260	311-2234-00			RES,VAR,NONWW:TRMR,5K OHM,20%,0.5W LINEAR	TK2073	GF06UT2 502 M L
A10R261	313-1243-00	B100100	B119999	RES,FXD,FILM:24K OHM,5%,0.2W (2246 MOD A,2Y)	57668	CCF50-1-G2402J
A10R261	313-1473-00	B120000		RES,FXD,FILM:47K OHM,5%,0.2W (2246 MOD A,2Y)	91637	CCF50-2-47001J
A10R261	313-1243-00	B700100	B714999	RES,FXD,FILM:24K OHM,5%,0.2W (2246 1Y)	57668	CCF50-1-G2402J
A10R261	313-1473-00	B715000		RES,FXD,FILM:47K OHM,5%,0.2W (2246 1Y)	91637	CCF50-2-47001J
A10R262	322-3083-00			RES,FXD,FILM:71.5 OHM,1%,0.2W,TC=T0MI	91637	CCF501G71R50F
A10R263	322-3083-00			RES,FXD,FILM:71.5 OHM,1%,0.2W,TC=T0MI	91637	CCF501G71R50F
A10R264	322-3083-00			RES,FXD,FILM:71.5 OHM,1%,0.2W,TC=T0MI	91637	CCF501G71R50F
A10R265	322-3083-00			RES,FXD,FILM:71.5 OHM,1%,0.2W,TC=T0MI	91637	CCF501G71R50F
A10R266	313-1302-00			RES,FXD,FILM:3K OHM,5%,0.2W	91637	CCF50-2-30000J
A10R267	322-3164-00			RES,FXD,FILM:499 OHM,1%,0.2W,TC=T0MI	91637	CCF501G499ROF
A10R268	322-3158-00			RES,FXD,FILM:432 OHM,1%,0.2W,TC=T0MI	91637	CCF 501 G432 Q0
A10R269	322-3158-00			RES,FXD,FILM:432 OHM,1%,0.2W,TC=T0MI	91637	CCF 501 G432 Q0
A10R270	313-1751-00			RES,FXD,FILM:750 OHM,5%,0.2W	91637	CCF50-2-750R0J
A10R271	313-1912-00			RES,FXD,FILM:9.1K OHM,5%,0.2W	91637	CCF501G9100ROF
A10R272	311-2232-00			RES,VAR,NONWW:TRMR,2K OHM,20%,0.5W LINEAR	TK2073	GF06UT2 202 M L
A10R273	311-2230-00			RES,VAR,NONWW:TRMR,500 OHM,20%,0.50 LINEAR	TK2073	GF06UT2 501 M L
A10R274	313-1100-00			RES,FXD,FILM:10 OHM,5%,0.2W	91637	CCF50-2-10R00J
A10R275	311-2227-00			RES,VAR,NONWW:TRMR,100 OHM,20%,0.5W LINEAR	TK2073	GF06UT2 101 M L
A10R276	322-3213-00			RES,FXD,FILM:1.62K OHM,1%,0.2W,TC=T0	91637	CCF501G16200F
A10R277	322-3213-00			RES,FXD,FILM:1.62K OHM,1%,0.2W,TC=T0	91637	CCF501G16200F
A10R278	322-3141-00			RES,FXD,FILM:287 OHM,1%,0.2W,TC=T0MI	91637	CCF501G287ROF
A10R279	322-3141-00			RES,FXD,FILM:287 OHM,1%,0.2W,TC=T0MI	91637	CCF501G287ROF
A10R280	322-3098-00			RES,FXD,FILM:102 OHM,1%,0.2W,TC=T0MI	91637	CCF501G102ROF
A10R281	322-3098-00			RES,FXD,FILM:102 OHM,1%,0.2W,TC=T0MI	91637	CCF501G102ROF
A10R282	313-1100-00			RES,FXD,FILM:10 OHM,5%,0.2W	91637	CCF50-2-10R00J
A10R283	313-1100-00			RES,FXD,FILM:10 OHM,5%,0.2W	91637	CCF50-2-10R00J
A10R284	313-1393-00			RES,FXD,FILM:39K OHM,5%,0.2W	91637	CCF50-2-39001J
A10R285	313-1393-00			RES,FXD,FILM:39K OHM,5%,0.2W	91637	CCF50-2-39001J
A10R286	322-3097-00			RES,FXD,FILM:100 OHM,1%,0.2W,TC=T0MI	91637	CCF501G100R0F
A10R287	322-3097-00			RES,FXD,FILM:100 OHM,1%,0.2W,TC=T0MI	91637	CCF501G100R0F
A10R288	322-3193-00			RES,FXD,FILM:1K OHM,1%,0.2W,TC=T0	91637	CCF501G10000F
A10R289	322-3193-00			RES,FXD,FILM:1K OHM,1%,0.2W,TC=T0	91637	CCF501G10000F
A10R290	322-3123-00			RES,FXD,FILM:187 OHM,1%,0.2W,TC=T0MI	91637	CCF501G187R0F
A10R291	322-3123-00			RES,FXD,FILM:187 OHM,1%,0.2W,TC=T0MI	91637	CCF501G187R0F
A10R292	313-1752-00			RES,FXD,FILM:7.5K OHM,5%,0.2W	91637	CCF50-2-75000J
A10R293	313-1752-00			RES,FXD,FILM:7.5K OHM,5%,0.2W	91637	CCF50-2-75000J
A10R294	313-1202-00			RES,FXD,FILM:2K OHM,5%,0.2W	91637	CCF50-2-20000J
A10R295	313-1302-00			RES,FXD,FILM:3K OHM,5%,0.2W	91637	CCF50-2-30000J

Component Number	Tektronix Part No.	Serial No. Effective	Dscont	Name & Description	Mfr. Code	Mfr. Part No.
A10R296	322-3117-00			RES,FXD,FILM:162 OHM,1%,0.2W,TC=T0MI	91637	CCF501G162R0F
A10R297	313-1100-00			RES,FXD,FILM:10 OHM,5%,0.2W	91637	CCF50-2-10R00J
A10R298	313-1027-00			RES,FXD,FILM:2.7 OHM,5%,0.2W	57668	TR20JE 02E7
A10R299	313-1204-00			RES,FXD,FILM:200K,5%,0.2W	91637	CCF50-2-20002J
A10R301	313-1102-00			RES,FXD,FILM:1K OHM,5%,0.2W	91637	CCF50-2-10000J
A10R302	313-1027-00			RES,FXD,FILM:2.7 OHM,5%,0.2W	57668	TR20JE 02E7
A10R303	313-1102-00			RES,FXD,FILM:1K OHM,5%,0.2W	91637	CCF50-2-10000J
A10R304	313-1470-00			RES,FXD,FILM:47 OHM,5%,0.2W	91637	CCF50-2-47R00J
A10R305	313-1511-00			RES,FXD,FILM:510 OHM,5%,0.2W	91637	CCF50-2-510ROJ
A10R306	313-1051-00			RES,FXD,FILM:5.1 OHM,5%,0.2W	91637	CT3-5R100J
A10R307	322-3328-02			RES,FXD,FILM:25.5K OHM,0.5%,0.2W,TC=T2	91637	CCF501D25501D
A10R308	322-3319-02			RES,FXD,FILM:20.5K OHM,0.5%,0.2W,TC=T2	91637	CCF501D20501D
A10R309	322-3289-00			RES,FXD,FILM:10K OHM,1%,0.2W,TC=T0	91637	CCF50G10001F
A10R310	313-1473-00			RES,FXD,FILM:47K OHM,5%,0.2W	91637	CCF50-2-47001J
A10R311	322-3269-02			RES,FXD,FILM:6.19K OHM,0.2W,5%	91637	CCF501D61900D
A10R312	313-1100-00			RES,FXD,FILM:10 OHM,5%,0.2W	91637	CCF50-2-10R00J
A10R313	307-2132-00			RES NTWK,FXD,FI:REF VOLTAGE DIVIDER	80009	307213200
A10R314	322-3333-02			RES,FXD,FILM:28.7K OHM,0.2W,.5%	91637	CCF501D28701D
A10R315	313-1470-00			RES,FXD,FILM:47 OHM,5%,0.2W	91637	CCF50-2-47R00J
A10R316	313-1270-00			RES,FXD,FILM:27 OHM 5%,0.2W	91637	CCF50-2-27R00J
A10R317	313-1101-00			RES,FXD,FILM:100 OHM,5%,0.2W	91637	CCF50-2-100R0J
A10R318	313-1681-00			RES,FXD,FILM:680 OHM,5%,0.2W	91637	CCF50-2-680ROJ
A10R319	313-1562-00			RES,FXD,FILM:5.6K OHM,5%,0.2W	91637	CCF50-2-56000J
A10R320	313-1470-00			RES,FXD,FILM:47 OHM,5%,0.2W	91637	CCF50-2-47R00J
A10R321	307-2133-00			RES NTWK,FXD,FI:RESISTOR NETWORK	80009	307213300
A10R322	313-1512-00			RES,FXD,FILM:5.1K OHM,5%,0.2W	91637	CCF50-2-51000J
A10R323	313-1512-00			RES,FXD,FILM:5.1K OHM,5%,0.2W	91637	CCF50-2-51000J
A10R325	313-1132-00			RES,FXD,FILM:1.3K OHM,5%,0.2W	91637	CCF50-2-13000J
A10R326	313-1132-00			RES,FXD,FILM:1.3K OHM,5%,0.2W	91637	CCF50-2-13000J
A10R327	313-1470-00			RES,FXD,FILM:47 OHM,5%,0.2W	91637	CCF50-2-47R00J
A10R328	313-1101-00			RES,FXD,FILM:100 OHM,5%,0.2W	91637	CCF50-2-100R0J
A10R329	313-1101-00			RES,FXD,FILM:100 OHM,5%,0.2W	91637	CCF50-2-100R0J
A10R330	313-1101-00			RES,FXD,FILM:100 OHM,5%,0.2W	91637	CCF50-2-100R0J
A10R331	313-1392-00			RES,FXD,FILM:3.9K OHM,5%,0.2W	91637	CCF50-2-39000J
A10R332	313-1820-00			RES,FXD,FILM:82 OHM,5%,0.2W	91637	CCF50-2-82R00J
A10R333	313-1120-00			RES,FXD,FILM:12 OHM,5%,0.2W	91637	CCF50-2-12R00J
A10R334	313-1151-00			RES,FXD,FILM:150 OHM,5%,0.2W	91637	CCF50-2-150R0J
A10R335	313-1162-00			RES,FXD,FILM:1.6K OHM,5%,0.2W	91637	CCF50-2-16000J
A10R336	313-1162-00			RES,FXD,FILM:1.6K OHM,5%,0.2W	91637	CCF50-2-16000J
A10R337	313-1151-00			RES,FXD,FILM:150 OHM,5%,0.2W	91637	CCF50-2-150R0J
A10R338	313-1132-00			RES,FXD,FILM:1.3K OHM,5%,0.2W	91637	CCF50-2-13000J
A10R339	313-1100-00			RES,FXD,FILM:10 OHM,5%,0.2W	91637	CCF50-2-10R00J
A10R340	313-1820-00			RES,FXD,FILM:82 OHM,5%,0.2W	91637	CCF50-2-82R00J
A10R341	313-1162-00			RES,FXD,FILM:1.6K OHM,5%,0.2W	91637	CCF50-2-16000J
A10R342	313-1132-00			RES,FXD,FILM:1.3K OHM,5%,0.2W	91637	CCF50-2-13000J

Component Number	Tektronix Part No.	Serial No. Effective	Serial No. Dscont	Name & Description	Mfr. Code	Mfr. Part No.
A10R343	313-1162-00			RES,FXD,FILM:1.6K OHM,5%,0.2W	91637	CCF50-2-16000J
A10R344	313-1332-00			RES,FXD,FILM:3.3K OHM,5%,0.2W	91637	CCF50-2-33000J
A10R345	313-1100-00			RES,FXD,FILM:10 OHM,5%,0.2W	91637	CCF50-2-10R00J
A10R346	313-1101-00			RES,FXD,FILM:100 OHM,5%,0.2W	91637	CCF50-2-100R0J
A10R347	313-1202-00			RES,FXD,FILM:2K OHM,5%,0.2W	91637	CCF50-2-20000J
A10R348	322-3193-00			RES,FXD,FILM:1K OHM,1%,0.2W,TC=T0	91637	CCF501G10000F
A10R349	322-3193-00			RES,FXD,FILM:1K OHM,1%,0.2W,TC=T0	91637	CCF501G10000F
A10R350	307-0540-00			RES NTWK,FXD,FI:(5)1K OHM,2%,0.7W	11236	770-61-R1K OR 7
A10R351	315-0155-00	B100100	B100823	RES,FXD,FILM:1.5M OHM,5%,0.25W (2246 MOD A,2Y)	TK1727	SFR25 2322-181-
A10R352	322-3193-00			RES,FXD,FILM:1K OHM,1%,0.2W,TC=T0	91637	CCF501G10000F
A10R353	313-1152-00			RES,FXD,FILM:1.5K OHM,5%,0.2W	91637	CCF50-2-15000J
A10R354	313-1101-00			RES,FXD,FILM:100 OHM,5%,0.2W	91637	CCF50-2-100R0J
A10R355	313-1681-00			RES,FXD,FILM:680 OHM,5%,0.2W	91637	CCF50-2-680ROJ
A10R356	313-1562-00			RES,FXD,FILM:5.6K OHM,5%,0.2W	91637	CCF50-2-56000J
A10R357	307-0540-00			RES NTWK,FXD,FI:(5)1K OHM,2%,0.7W	11236	770-61-R1K OR 7
A10R358	313-1561-00			RES,FXD,FILM:560 OHM,5%,0.2W	91637	CCF50-2-56OROJ
A10R359	313-1162-00			RES,FXD,FILM:1.6K OHM,5%,0.2W	91637	CCF50-2-16000J
A10R360	313-1162-00			RES,FXD,FILM:1.6K OHM,5%,0.2W	91637	CCF50-2-16000J
A10R361	313-1200-00			RES,FXD,FILM:20 OHM,5%,0.2W	91637	CCF50-2-20R00J
A10R362	313-1392-00			RES,FXD,FILM:3.9K OHM,5%,0.2W	91637	CCF50-2-39000J
A10R363	313-1332-00			RES,FXD,FILM:3.3K OHM,5%,0.2W	91637	CCF50-2-33000J
A10R364	313-1511-00			RES,FXD,FILM:510 OHM,5%,0.2W	91637	CCF50-2-510ROJ
A10R365	313-1132-00			RES,FXD,FILM:1.3K OHM,5%,0.2W	91637	CCF50-2-13000J
A10R366	313-1102-00			RES,FXD,FILM:1K OHM,5%,0.2W	91637	CCF50-2-10000J
A10R367	313-1102-00			RES,FXD,FILM:1K OHM,5%,0.2W	91637	CCF50-2-10000J
A10R369	313-1331-00			RES,FXD,FILM:330 OHM,5%,0.2W	91637	CCF50-2-330ROJ
A10R370	313-1820-00			RES,FXD,FILM:82 OHM,5%,0.2W	91637	CCF50-2-82R00J
A10R371	313-1120-00			RES,FXD,FILM:12 OHM,5%,0.2W	91637	CCF50-2-12R00J
A10R372	313-1200-00			RES,FXD,FILM:20 OHM,5%,0.2W	91637	CCF50-2-20R00J
A10R373	313-1820-00			RES,FXD,FILM:82 OHM,5%,0.2W	91637	CCF50-2-82R00J
A10R374	313-1100-00			RES,FXD,FILM:10 OHM,5%,0.2W	91637	CCF50-2-10R00J
A10R375	313-1101-00			RES,FXD,FILM:100 OHM,5%,0.2W	91637	CCF50-2-100R0J
A10R376	313-1332-00			RES,FXD,FILM:3.3K OHM,5%,0.2W	91637	CCF50-2-33000J
A10R377	322-3193-00			RES,FXD,FILM:1K OHM,1%,0.2W,TC=T0	91637	CCF501G10000F
A10R378	313-1820-00			RES,FXD,FILM:82 OHM,5%,0.2W	91637	CCF50-2-82R00J
A10R379	322-3193-00			RES,FXD,FILM:1K OHM,1%,0.2W,TC=T0	91637	CCF501G10000F
A10R380	313-1820-00			RES,FXD,FILM:82 OHM,5%,0.2W	91637	CCF50-2-82R00J
A10R381	313-1270-00			RES,FXD,FILM:27 OHM 5%,0.2W	91637	CCF50-2-27R00J
A10R382	322-3193-00			RES,FXD,FILM:1K OHM,1%,0.2W,TC=T0	91637	CCF501G10000F
A10R383	313-1151-00			RES,FXD,FILM:150 OHM,5%,0.2W	91637	CCF50-2-150R0J

Component Number	Tektronix Part No.	Serial No. Effective	Dscont	Name & Description	Mfr. Code	Mfr. Part No.
A10R384	313-1512-00			RES,FXD,FILM:5.1K OHM,5%,0.2W	91637	CCF50-2-51000J
A10R385	313-1162-00			RES,FXD,FILM:1.6K OHM,5%,0.2W	91637	CCF50-2-16000J
A10R386	313-1162-00			RES,FXD,FILM:1.6K OHM,5%,0.2W	91637	CCF50-2-16000J
A10R387	313-1820-00			RES,FXD,FILM:82 OHM,5%,0.2W	91637	CCF50-2-82R00J
A10R388	313-1820-00			RES,FXD,FILM:82 OHM,5%,0.2W	91637	CCF50-2-82R00J
A10R390	313-1100-00			RES,FXD,FILM:10 OHM,5%,0.2W	91637	CCF50-2-10R00J
A10R391	313-1514-00	B100100	B100823	RES,FXD,FILM:510K OHM,5%,0.2W (2246 MOD A,2Y)	91637	CCF5051002J
A10R392	313-1100-00			RES,FXD,FILM:10 OHM,5%,0.2W	91637	CCF50-2-10R00J
A10R393	313-1471-00			RES,FXD,FILM:470 OHM,5%,0.2W	91637	CCF50-2-470R0J
A10R394	313-1471-00			RES,FXD,FILM:470 OHM,5%,0.2W	91637	CCF50-2-470R0J
A10R395	313-1102-00			RES,FXD,FILM:1K OHM,5%,0.2W	91637	CCF50-2-10000J
A10R396	313-1102-00			RES,FXD,FILM:1K OHM,5%,0.2W	91637	CCF50-2-10000J
A10R401	313-1101-00			RES,FXD,FILM:100 OHM,5%,0.2W	91637	CCF50-2-100R0J
A10R402	313-1101-00	B100100	B110099	RES,FXD,FILM:100 OHM,5%,0.2W (2246 MOD A,2Y)	91637	CCF50-2-100R0J
A10R402	313-1101-00	B700100	B710099	RES,FXD,FILM:100 OHM,5%,0.2W (2246 1Y)	91637	CCF50-2-100R0J
A10R403	313-1511-00	B110100		RES,FXD,FILM:510 OHM,5%,0.2W (2246 MOD A,2Y)	91637	CCF50-2-510ROJ
A10R403	313-1511-00	B710100		RES,FXD,FILM:510 OHM,5%,0.2W (2246 1Y)	91637	CCF50-2-510ROJ
A10R410	313-1511-00	B100100	B110099	RES,FXD,FILM:510 OHM,5%,0.2W (2246 MOD A,2Y)	91637	CCF50-2-510ROJ
A10R410	313-1331-00	B110100		RES,FXD,FILM:330 OHM,5%,0.2W (2246 MOD A,2Y)	91637	CCF50-2-330ROJ
A10R410	313-1511-00	B700100	B710099	RES,FXD,FILM:510 OHM,5%,0.2W (2246 1Y)	91637	CCF50-2-510ROJ
A10R410	313-1331-00	B710100		RES,FXD,FILM:330 OHM,5%,0.2W (2246 1Y)	91637	CCF50-2-330ROJ
A10R411	313-1101-00	B100100	B110099	RES,FXD,FILM:100 OHM,5%,0.2W (2246 MOD A,2Y)	91637	CCF50-2-100R0J
A10R411	313-1151-00	B110100		RES,FXD,FILM:150 OHM,5%,0.2W (2246 MOD A,2Y)	91637	CCF50-2-150R0J
A10R411	313-1101-00	B700100	B710099	RES,FXD,FILM:100 OHM,5%,0.2W (2246 1Y)	91637	CCF50-2-100R0J
A10R411	313-1151-00	B710100		RES,FXD,FILM:150 OHM,5%,0.2W (2246 1Y)	91637	CCF50-2-150R0J
A10R412	313-1101-00	B100100	B110099	RES,FXD,FILM:100 OHM,5%,0.2W (2246 MOD A,2Y)	91637	CCF50-2-100R0J
A10R412	313-1151-00	B110100		RES,FXD,FILM:150 OHM,5%,0.2W (2246 MOD A,2Y)	91637	CCF50-2-150R0J
A10R412	313-1101-00	B700100	B710099	RES,FXD,FILM:100 OHM,5%,0.2W (2246 1Y)	91637	CCF50-2-100R0J
A10R412	313-1151-00	B710100		RES,FXD,FILM:150 OHM,5%,0.2W (2246 1Y)	91637	CCF50-2-150R0J
A10R413	313-1511-00	B100100	B110099	RES,FXD,FILM:510 OHM,5%,0.2W (2246 MOD A,2Y)	91637	CCF50-2-510ROJ

Component Number	Tektronix Part No.	Serial No. Effective	Dscont	Name & Description	Mfr. Code	Mfr. Part No.
A10R413	313-1331-00	B110100		RES,FXD,FILM:330 OHM,5%,0.2W (2246 MOD A,2Y)	91637	CCF50-2-330ROJ
A10R413	313-1511-00	B700100	B710099	RES,FXD,FILM:510 OHM,5%,0.2W (2246 1Y)	91637	CCF50-2-510ROJ
A10R413	313-1331-00	B710100		RES,FXD,FILM:330 OHM,5%,0.2W (2246 1Y)	91637	CCF50-2-330ROJ
A10R414	313-1511-00	B100100	B110099	RES,FXD,FILM:510 OHM,5%,0.2W (2246 MOD A,2Y)	91637	CCF50-2-510ROJ
A10R414	313-1331-00	B110100		RES,FXD,FILM:330 OHM,5%,0.2W (2246 MOD A,2Y)	91637	CCF50-2-330ROJ
A10R414	313-1511-00	B700100	B710099	RES,FXD,FILM:510 OHM,5%,0.2W (2246 1Y)	91637	CCF50-2-510ROJ
A10R414	313-1331-00	B710100		RES,FXD,FILM:330 OHM,5%,0.2W (2246 1Y)	91637	CCF50-2-330ROJ
A10R415	313-1101-00	B100100	B110099	RES,FXD,FILM:100 OHM,5%,0.2W (2246 MOD A,1Y)	91637	CCF50-2-100R0J
A10R415	313-1151-00	B110100		RES,FXD,FILM:150 OHM,5%,0.2W (2246 MOD A,2Y)	91637	CCF50-2-150R0J
A10R415	313-1101-00	B700100	B710099	RES,FXD,FILM:100 OHM,5%,0.2W (2246 1Y)	91637	CCF50-2-100R0J
A10R415	313-1151-00	B710100		RES,FXD,FILM:150 OHM,5%,0.2W (2246 1Y)	91637	CCF50-2-150R0J
A10R416	313-1101-00	B100100	B110099	RES,FXD,FILM:100 OHM,5%,0.2W (2246 MOD A,2Y)	91637	CCF50-2-100R0J
A10R416	313-1151-00	B110100		RES,FXD,FILM:150 OHM,5%,0.2W (2246 MOD A,2Y)	91637	CCF50-2-150R0J
A10R416	313-1101-00	B700100	B710099	RES,FXD,FILM:100 OHM,5%,0.2W (2246 1Y)	91637	CCF50-2-100R0J
A10R416	313-1151-00	B710100		RES,FXD,FILM:150 OHM,5%,0.2W (2246 1Y)	91637	CCF50-2-150R0J
A10R417	313-1511-00	B100100	B110099	RES,FXD,FILM:510 OHM,5%,0.2W (2246 MOD A,2Y)	91637	CCF50-2-510ROJ
A10R417	313-1331-00	B110100		RES,FXD,FILM:330 OHM,5%,0.2W (2246 MOD A,2Y)	91637	CCF50-2-330ROJ
A10R417	313-1511-00	B700100	B710099	RES,FXD,FILM:510 OHM,5%,0.2W (2246 1Y)	91637	CCF50-2-510ROJ
A10R417	313-1331-00	B710100		RES,FXD,FILM:330 OHM,5%,0.2W (2246 1Y)	91637	CCF50-2-330ROJ
A10R420	313-1271-00			RES,FXD,FILM:270 OHM,5%,0.2W	91637	CCF50-2-270R0J
A10R421	322-3279-00			RES,FXD,FILM:7.87K OHM,1%,0.2W,TC=T0	91637	CCF501G787OOF
A10R422	322-3279-00			RES,FXD,FILM:7.87K OHM,1%,0.2W,TC=T0	91637	CCF501G787OOF
A10R423	322-3279-00			RES,FXD,FILM:7.87K OHM,1%,0.2W,TC=T0	91637	CCF501G787OOF
A10R424	322-3279-00			RES,FXD,FILM:7.87K OHM,1%,0.2W,TC=T0	91637	CCF501G787OOF
A10R425	313-1750-00			RES,FXD,FILM:75 OHM,5%,0.2W	91637	CCF50-2-75R00J
A10R426	313-1101-00			RES,FXD,FILM:100 OHM,5%,0.2W	91637	CCF50-2-100R0J
A10R430	313-1271-00			RES,FXD,FILM:270 OHM,5%,0.2W	91637	CCF50-2-270R0J
A10R431	313-1750-00			RES,FXD,FILM:75 OHM,5%,0.2W	91637	CCF50-2-75R00J
A10R432	322-3074-00			RES,FXD,FILM:57.6 OHM,1%,0.2W,TC=T0MI	91637	CCF501G57R60F
A10R440	313-1104-00			RES,FXD,FILM:100K OHM,5%,0.2W	91637	CCF50-2-10002J

Component Number	Tektronix Part No.	Serial No. Effective	Dscont	Name & Description	Mfr. Code	Mfr. Part No.
A10R441	313-1621-00			RES,FXD,FILM:620 OHM,5%,0.2W	91637	CCF50-2-620ROJ
A10R442	313-1562-00			RES,FXD,FILM:5.6K OHM,5%,0.2W	91637	CCF50-2-56000J
A10R443	313-1562-00			RES,FXD,FILM:5.6K OHM,5%,0.2W	91637	CCF50-2-56000J
A10R444	313-1561-00			RES,FXD,FILM:560 OHM,5%,0.2W	91637	CCF50-2-560ROJ
A10R445	322-3143-00			RES,FXD,FILM:301 OHM,1%,0.2W,TC=T0MI	91637	CCF501G301ROF
A10R446	313-1331-00			RES,FXD,FILM:330 OHM,5%,0.2W	91637	CCF50-2-330ROJ
A10R447	322-3285-00	B110100		RES,FXD,FILM:9.09K OHM,1%,0.2W,TC=T0MI (2246 MOD A,2Y)	91637	CCF501G90900F
A10R447	322-3285-00	B710100		RES,FXD,FILM:9.09K OHM,1%,0.2W,TC=T0MI (2246 1Y)	91637	CCF501G90900F
A10R448	322-3333-02	B110100		RES,FXD,FILM:28.7K OHM,0.2W,.5% (2246 MOD A,2Y)	91637	CCF501D28701D
A10R448	322-3333-02	B710100		RES,FXD,FILM:28.7K OHM,0.2W,.5% (2246 1Y)	91637	CCF501D28701D
A10R449	313-1392-00			RES,FXD,FILM:3.9K OHM,5%,0.2W	91637	CCF50-2-39000J
A10R450	313-1271-00			RES,FXD,FILM:270 OHM,5%,0.2W	91637	CCF50-2-270R0J
A10R451	322-3279-00			RES,FXD,FILM:7.87K OHM,1%,0.2W,TC=T0	91637	CCF501G787OOF
A10R452	322-3279-00			RES,FXD,FILM:7.87K OHM,1%,0.2W,TC=T0	91637	CCF501G787OOF
A10R453	322-3279-00			RES,FXD,FILM:7.87K OHM,1%,0.2W,TC=T0	91637	CCF501G787OOF
A10R454	322-3279-00			RES,FXD,FILM:7.87K OHM,1%,0.2W,TC=T0	91637	CCF501G787OOF
A10R455	311-2230-00			RES,VAR,NONWW:TRMR,500 OHM,20%,0.50 LINEAR	TK2073	GF06UT2 501 M L
A10R456	313-1103-00			RES,FXD,FILM:10K OHM,5%,0.2W	91637	CCF50-2-10001J
A10R460	313-1271-00	B100100	B113237	RES,FXD,FILM:270 OHM,5%,0.2W (2246 MOD A,2Y)	91637	CCF50-2-270R0J
A10R460	313-1681-00	B113238		RES,FXD,FILM:680 OHM,5%,0.2W (2246 MOD A,2Y)	91637	CCF50-2-680ROJ
A10R460	313-1271-00	B700100	B711093	RES,FXD,FILM:270 OHM,5%,0.2W (2246 1Y)	91637	CCF50-2-270R0J
A10R460	313-1681-00	B711094		RES,FXD,FILM:680 OHM,5%,0.2W (2246 1Y)	91637	CCF50-2-680ROJ
A10R461	313-1101-00	B100100	B120199	RES,FXD,FILM:100 OHM,5%,0.2W (2246 MOD A,2Y)	91637	CCF50-2-100R0J
A10R461	322-3143-00	B120200		RES,FXD,FILM:301 OHM,1%,0.2W,TC=T0MI (2246 MOD A,2Y)	91637	CCF501G301ROF
A10R461	313-1101-00	B700100	B714999	RES,FXD,FILM:100 OHM,5%,0.2W (2246 1Y)	91637	CCF50-2-100R0J
A10R461	322-3143-00	B715000		RES,FXD,FILM:301 OHM,1%,0.2W,TC=T0MI (2246 1Y)	91637	CCF501G301ROF
A10R462	322-3074-00			RES,FXD,FILM:57.6 OHM,1%,0.2W,TC=T0MI	91637	CCF501G57R60F
A10R463	313-1120-00			RES,FXD,FILM:12 OHM,5%,0.2W	91637	CCF50-2-12R00J
A10R470	313-1104-00			RES,FXD,FILM:100K OHM,5%,0.2W	91637	CCF50-2-10002J
A10R471	313-1621-00			RES,FXD,FILM:620 OHM,5%,0.2W	91637	CCF50-2-620ROJ
A10R472	313-1562-00			RES,FXD,FILM:5.6K OHM,5%,0.2W	91637	CCF50-2-56000J
A10R473	313-1562-00			RES,FXD,FILM:5.6K OHM,5%,0.2W	91637	CCF50-2-56000J
A10R474	313-1561-00			RES,FXD,FILM:560 OHM,5%,0.2W	91637	CCF50-2-560ROJ
A10R475	322-3328-02	B110100		RES,FXD,FILM:25.5K OHM,0.5%,0.2W,TC=T2 (2246 MOD A,2Y)	91637	CCF501D25501D
A10R475	322-3328-02	B710100		RES,FXD,FILM:25.5K OHM,0.5%,0.2W,TC=T2 (2246 1Y)	91637	CCF501D25501D

Component Number	Tektronix Part No.	Serial No. Effective	Serial No. Dscont	Name & Description	Mfr. Code	Mfr. Part No.
A10R476	313-1392-00			RES,FXD,FILM:3.9K OHM,5%,0.2W	91637	CCF50-2-39000J
A10R477	322-3285-00	B100100	B110099	RES,FXD,FILM:9.09K OHM,1%,0.2W,TC=T0MI (2246 MOD A,2Y)	91637	CCF501G90900F
A10R477	322-3284-00	B110100		RES,FXD,FILM:8.87K OHM,1%,0.2W,TC=T0MI (2246 MOD A,2Y)	91637	CCF501G88700F
A10R477	322-3285-00	B700100	B710099	RES,FXD,FILM:9.09K OHM,1%,0.2W,TC=T0MI (2246 1Y)	91637	CCF501G90900F
A10R477	322-3284-00	B710100		RES,FXD,FILM:8.87K OHM,1%,0.2W,TC=T0MI (2246 1Y)	91637	CCF501G88700F
A10R478	322-3333-02	B100100	B110099	RES,FXD,FILM:28.7K OHM,0.2W,.5% (2246 MOD A,2Y)	91637	CCF501D28701D
A10R478	322-3232-00	B110100		RES,FXD,FILM:2.55K OHM,1%,0.2W,TC=T0MI (2246 MOD A,2Y)	91637	CCF501G25500F
A10R478	322-3333-02	B700100	B710099	RES,FXD,FILM:28.7K OHM,0.2W,.5% (2246 1Y)	91637	CCF501D28701D
A10R478	322-3232-00	B710100		RES,FXD,FILM:2.55K OHM,1%,0.2W,TC=T0MI (2246 1Y)	91637	CCF501G25500F
A10R479	322-3143-00			RES,FXD,FILM:301 OHM,1%,0.2W,TC=T0MI	91637	CCF501G301ROF
A10R480	313-1051-00	B110100		RES,FXD,FILM:5.1 OHM,5%,0.2W (2246 MOD A,2Y)	91637	CT3-5R100J
A10R480	313-1051-00	B710100		RES,FXD,FILM:5.1 OHM,5%,0.2W (2246 1Y)	91637	CT3-5R100J
A10R481	313-1051-00			RES,FXD,FILM:5.1 OHM,5%,0.2W	91637	CT3-5R100J
A10R483	313-1151-00			RES,FXD,FILM:150 OHM,5%,0.2W	91637	CCF50-2-150R0J
A10R484	313-1202-00			RES,FXD,FILM:2K OHM,5%,0.2W	91637	CCF50-2-20000J
A10R485	313-1392-00			RES,FXD,FILM:3.9K OHM,5%,0.2W	91637	CCF50-2-39000J
A10R486	313-1512-00			RES,FXD,FILM:5.1K OHM,5%,0.2W	91637	CCF50-2-51000J
A10R487	313-1331-00			RES,FXD,FILM:330 OHM,5%,0.2W	91637	CCF50-2-330ROJ
A10R490	313-1511-00			RES,FXD,FILM:510 OHM,5%,0.2W	91637	CCF50-2-510ROJ
A10R491	313-1511-00			RES,FXD,FILM:510 OHM,5%,0.2W	91637	CCF50-2-510ROJ
A10R492	313-1511-00			RES,FXD,FILM:510 OHM,5%,0.2W	91637	CCF50-2-510ROJ
A10R493	313-1511-00			RES,FXD,FILM:510 OHM,5%,0.2W	91637	CCF50-2-510ROJ
A10R494	313-1511-00			RES,FXD,FILM:510 OHM,5%,0.2W	91637	CCF50-2-510ROJ
A10R495	313-1511-00			RES,FXD,FILM:510 OHM,5%,0.2W	91637	CCF50-2-510ROJ
A10R496	313-1511-00			RES,FXD,FILM:510 OHM,5%,0.2W	91637	CCF50-2-510ROJ
A10R497	313-1511-00			RES,FXD,FILM:510 OHM,5%,0.2W	91637	CCF50-2-510ROJ
A10R498	313-1511-00			RES,FXD,FILM:510 OHM,5%,0.2W	91637	CCF50-2-510ROJ
A10R501	307-0446-00			RES NTWK,FXD,FI:10K OHM,20%,(9)RES	11236	750-101-R10K
A10R502	313-1103-00			RES,FXD,FILM:10K OHM,5%,0.2W	91637	CCF50-2-10001J
A10R503	313-1103-00			RES,FXD,FILM:10K OHM,5%,0.2W	91637	CCF50-2-10001J
A10R504	313-1101-00			RES,FXD,FILM:100 OHM,5%,0.2W	91637	CCF50-2-100R0J
A10R505	313-1103-00			RES,FXD,FILM:10K OHM,5%,0.2W	91637	CCF50-2-10001J
A10R506	313-1103-00			RES,FXD,FILM:10K OHM,5%,0.2W	91637	CCF50-2-10001J
A10R507	313-1103-00			RES,FXD,FILM:10K OHM,5%,0.2W	91637	CCF50-2-10001J
A10R508	313-1103-00			RES,FXD,FILM:10K OHM,5%,0.2W	91637	CCF50-2-10001J

Component Number	Tektronix Part No.	Serial No. Effective	Serial No. Dscont	Name & Description	Mfr. Code	Mfr. Part No.
A10R510	313-1103-00			RES,FXD,FILM:10K OHM,5%,0.2W	91637	CCF50-2-10001J
A10R512	313-1103-00			RES,FXD,FILM:10K OHM,5%,0.2W	91637	CCF50-2-10001J
A10R601	313-1102-00			RES,FXD,FILM:1K OHM,5%,0.2W	91637	CCF50-2-10000J
A10R602	322-3193-00			RES,FXD,FILM:1K OHM,1%,0.2W,TC=T0	91637	CCF501G10000F
A10R603	322-3193-00			RES,FXD,FILM:1K OHM,1%,0.2W,TC=T0	91637	CCF501G10000F
A10R604	322-3231-00			RES,FXD,FILM:2.49K OHM,1%,0.2W,TC=T0MI	91637	CCF50-1G24900F
A10R605	322-3193-00			RES,FXD,FILM:1K OHM,1%,0.2W,TC=T0	91637	CCF501G10000F
A10R606	313-1102-00			RES,FXD,FILM:1K OHM,5%,0.2W	91637	CCF50-2-10000J
A10R607	313-1510-00	B100100	B110099	RES,FXD,FILM:51 OHM,5%,0.2W (2246 MOD A,2Y)	91637	CCF501G51R00J
A10R607	313-1510-00	B700100	B710099	RES,FXD,FILM:51 OHM,5%,0.2W (2246 1Y)	91637	CCF501G51R00J
A10R609	313-1101-00			RES,FXD,FILM:100 OHM,5%,0.2W	91637	CCF50-2-100R0J
A10R610	313-1391-00			RES,FXD,FILM:390 OHM,5%,0.2W	91637	CCF50-2-390R0J
A10R611	313-1101-00			RES,FXD,FILM:100 OHM,5%,0.2W	91637	CCF50-2-100R0J
A10R612	313-1391-00			RES,FXD,FILM:390 OHM,5%,0.2W	91637	CCF50-2-390R0J
A10R613	313-1101-00			RES,FXD,FILM:100 OHM,5%,0.2W	91637	CCF50-2-100R0J
A10R614	313-1391-00			RES,FXD,FILM:390 OHM,5%,0.2W	91637	CCF50-2-390R0J
A10R615	313-1471-00			RES,FXD,FILM:470 OHM,5%,0.2W	91637	CCF50-2-470R0J
A10R616	313-1471-00			RES,FXD,FILM:470 OHM,5%,0.2W	91637	CCF50-2-470R0J
A10R617	313-1471-00			RES,FXD,FILM:470 OHM,5%,0.2W	91637	CCF50-2-470R0J
A10R618	313-1821-00			RES,FXD,FILM:820 OHM,5%,0.2W	91637	CCF50-2-820R0J
A10R619	313-1821-00			RES,FXD,FILM:820 OHM,5%,0.2W	91637	CCF50-2-820R0J
A10R620	313-1821-00			RES,FXD,FILM:820 OHM,5%,0.2W	91637	CCF50-2-820R0J
A10R621	313-1302-00			RES,FXD,FILM:3K OHM,5%,0.2W	91637	CCF50-2-30000J
A10R622	313-1302-00			RES,FXD,FILM:3K OHM,5%,0.2W	91637	CCF50-2-30000J
A10R623	313-1302-00			RES,FXD,FILM:3K OHM,5%,0.2W	91637	CCF50-2-30000J
A10R624	313-1102-00			RES,FXD,FILM:1K OHM,5%,0.2W	91637	CCF50-2-10000J
A10R625	313-1201-00			RES,FXD,FILM:200 OHM,5%,0.2W	91637	CCF50-2-200R0J
A10R626	313-1390-00			RES,FXD,FILM:39 OHM,5%,0.2W	91637	CCF50-2-39R00J
A10R627	313-1390-00			RES,FXD,FILM:39 OHM,5%,0.2W	91637	CCF50-2-39R00J
A10R628	307-0503-00			RES NTWK,FXD,FI:(9) 510 OHM,20%,0.125WTC=50 PPM/DEG C	11236	750-101-R510 OR
A10R630	313-1103-00			RES,FXD,FILM:10K OHM,5%,0.2W	91637	CCF50-2-10001J
A10R631	313-1102-00			RES,FXD,FILM:1K OHM,5%,0.2W	91637	CCF50-2-10000J
A10R636	313-1303-00			RES,FXD,FILM:30K OHM,5%,0.2W	91637	CCF50-2-30001J
A10R637	313-1822-00			RES,FXD,FILM:8.2K,OHM,5%,0.2W	91637	CCF50-2-82000J
A10R638	313-1753-00			RES,FXD,FILM:75K OHM,5%,0.2W	91637	CCF50-2-75001J
A10R639	313-1512-00			RES,FXD,FILM:5.1K OHM,5%,0.2W	91637	CCF50-2-51000J
A10R640	313-1512-00			RES,FXD,FILM:5.1K OHM,5%,0.2W	91637	CCF50-2-51000J
A10R641	313-1821-00			RES,FXD,FILM:820 OHM,5%,0.2W	91637	CCF50-2-820R0J
A10R642	313-1821-00			RES,FXD,FILM:820 OHM,5%,0.2W	91637	CCF50-2-820R0J
A10R643	313-1562-00			RES,FXD,FILM:5.6K OHM,5%,0.2W	91637	CCF50-2-56000J
A10R644	313-1562-00			RES,FXD,FILM:5.6K OHM,5%,0.2W	91637	CCF50-2-56000J
A10R645	313-1562-00			RES,FXD,FILM:5.6K OHM,5%,0.2W	91637	CCF50-2-56000J

Component Number	Tektronix Part No.	Serial No. Effective	Dscont	Name & Description	Mfr. Code	Mfr. Part No.
A10R646	313-1562-00			RES,FXD,FILM:5.6K OHM,5%,0.2W	91637	CCF50-2-56000J
A10R647	313-1821-00			RES,FXD,FILM:820 OHM,5%,0.2W	91637	CCF50-2-820R0J
A10R648	313-1471-00			RES,FXD,FILM:470 OHM,5%,0.2W	91637	CCF50-2-470R0J
A10R649	313-1302-00			RES,FXD,FILM:3K OHM,5%,0.2W	91637	CCF50-2-30000J
A10R650	313-1751-00			RES,FXD,FILM:750 OHM,5%,0.2W	91637	CCF50-2-750R0J
A10R651	313-1331-00			RES,FXD,FILM:330 OHM,5%,0.2W	91637	CCF50-2-330ROJ
A10R652	313-1331-00			RES,FXD,FILM:330 OHM,5%,0.2W	91637	CCF50-2-330ROJ
A10R653	313-1471-00			RES,FXD,FILM:470 OHM,5%,0.2W	91637	CCF50-2-470R0J
A10R654	313-1302-00			RES,FXD,FILM:3K OHM,5%,0.2W	91637	CCF50-2-30000J
A10R655	313-1821-00			RES,FXD,FILM:820 OHM,5%,0.2W	91637	CCF50-2-820R0J
A10R656	313-1201-00			RES,FXD,FILM:200 OHM,5%,0.2W	91637	CCF50-2-200R0J
A10R657	313-1201-00			RES,FXD,FILM:200 OHM,5%,0.2W	91637	CCF50-2-200R0J
A10R658	313-1821-00			RES,FXD,FILM:820 OHM,5%,0.2W	91637	CCF50-2-820R0J
A10R659	313-1821-00			RES,FXD,FILM:820 OHM,5%,0.2W	91637	CCF50-2-820R0J
A10R662	313-1393-00			RES,FXD,FILM:39K OHM,5%,0.2W	91637	CCF50-2-39001J
A10R663	313-1393-00			RES,FXD,FILM:39K OHM,5%,0.2W	91637	CCF50-2-39001J
A10R664	313-1393-00			RES,FXD,FILM:39K OHM,5%,0.2W	91637	CCF50-2-39001J
A10R665	313-1393-00			RES,FXD,FILM:39K OHM,5%,0.2W	91637	CCF50-2-39001J
A10R666	313-1393-00			RES,FXD,FILM:39K OHM,5%,0.2W	91637	CCF50-2-39001J
A10R669	313-1511-00			RES,FXD,FILM:510 OHM,5%,0.2W	91637	CCF50-2-510ROJ
A10R670	313-1511-00			RES,FXD,FILM:510 OHM,5%,0.2W	91637	CCF50-2-510ROJ
A10R671	313-1200-00			RES,FXD,FILM:20 OHM,5%,0.2W	91637	CCF50-2-20R00J
A10R672	313-1333-00			RES,FXD,FILM:33K OHM,5%,0.2W	91637	CCF50-2-33001J
A10R673	313-1331-00	B110100		RES,FXD,FILM:330 OHM,5%,0.2W (2246 MOD A,2Y)	91637	CCF50-2-330ROJ
A10R673	313-1331-00	B710100		RES,FXD,FILM:330 OHM,5%,0.2W (2246 1Y)	91637	CCF50-2-330ROJ
A10R674	313-1201-00	B110100		RES,FXD,FILM:200 OHM,5%,0.2W (2246 MOD A,2Y)	91637	CCF50-2-200R0J
A10R674	313-1201-00	B710100		RES,FXD,FILM:200 OHM,5%,0.2W (2246 1Y)	91637	CCF50-2-200R0J
A10R686	313-1511-00	B110100		RES,FXD,FILM:510 OHM,5%,0.2W (2246 MOD A,2Y)	91637	CCF50-2-510ROJ
A10R686	313-1511-00	B710100		RES,FXD,FILM:510 OHM,5%,0.2W (2246 1Y)	91637	CCF50-2-510ROJ
A10R687	313-1511-00	B110100		RES,FXD,FILM:510 OHM,5%,0.2W (2246 MOD A,2Y)	91637	CCF50-2-510ROJ
A10R687	313-1511-00	B710100		RES,FXD,FILM:510 OHM,5%,0.2W (2246 1Y)	91637	CCF50-2-510ROJ
A10R688	313-1511-00	B110100		RES,FXD,FILM:510 OHM,5%,0.2W (2246 MOD A,2Y)	91637	CCF50-2-510ROJ
A10R688	313-1511-00	B710100		RES,FXD,FILM:510 OHM,5%,0.2W (2246 1Y)	91637	CCF50-2-510ROJ
A10R689	313-1750-00	B110100		RES,FXD,FILM:75 OHM,5%,0.2W (2246 MOD A,2Y)	91637	CCF50-2-75R00J
A10R689	313-1750-00	B710100		RES,FXD,FILM:75 OHM,5%,0.2W (2246 1Y)	91637	CCF50-2-75R00J

Component Number	Tektronix Part No.	Serial No. Effective	Dscont	Name & Description	Mfr. Code	Mfr. Part No.
A10R690	313-1750-00	B110100		RES,FXD,FILM:75 OHM,5%,0.2W (2246 MOD A,2Y)	91637	CCF50-2-75R00J
A10R690	313-1750-00	B710100		RES,FXD,FILM:75 OHM,5%,0.2W (2246 1Y)	91637	CCF50-2-75R00J
A10R691	313-1750-00	B110100		RES,FXD,FILM:75 OHM,5%,0.2W (2246 MOD A,2Y)	91637	CCF50-2-75R00J
A10R691	313-1750-00	B710100		RES,FXD,FILM:75 OHM,5%,0.2W (2246 1Y)	91637	CCF50-2-75R00J
A10R692	313-1750-00	B110100		RES,FXD,FILM:75 OHM,5%,0.2W (2246 MOD A,2Y)	91637	CCF50-2-75R00J
A10R692	313-1750-00	B710100		RES,FXD,FILM:75 OHM,5%,0.2W (2246 1Y)	91637	CCF50-2-75R00J
A10R693	313-1750-00	B110100		RES,FXD,FILM:75 OHM,5%,0.2W (2246 MOD A,2Y)	91637	CCF50-2-75R00J
A10R693	313-1750-00	B710100		RES,FXD,FILM:75 OHM,5%,0.2W (2246 1Y)	91637	CCF50-2-75R00J
A10R694	313-1750-00	B110100		RES,FXD,FILM:75 OHM,5%,0.2W (2246 MOD A,2Y)	91637	CCF50-2-75R00J
A10R694	313-1750-00	B710100		RES,FXD,FILM:75 OHM,5%,0.2W (2246 1Y)	91637	CCF50-2-75R00J
A10R701	322-3226-00			RES,FXD,FILM:2.21K OHM,1%,0.2W,TC=T0	91637	CCF501G22100F
A10R702	322-3226-00			RES,FXD,FILM:2.21K OHM,1%,0.2W,TC=T0	91637	CCF501G22100F
A10R703	311-2230-00			RES,VAR,NONWW:TRMR,500 OHM,20%,0.50 LINEAR	TK2073	GF06UT2 501 M L
A10R706	322-3085-00			RES,FXD,FILM:75 OHM,1%,0.2W,TC=T0	91637	CCF501G75R00F
A10R707	322-3085-00			RES,FXD,FILM:75 OHM,1%,0.2W,TC=T0	91637	CCF501G75R00F
A10R708	307-2130-00			RES NTWK,FXD,FI:DUAL LOAD RESISTOR	80009	307213000
A10R709	313-1027-00			RES,FXD,FILM:2.7 OHM,5%,0.2W	57668	TR20JE 02E7
A10R710	313-1134-00			RES,FXD,FILM:130K OHM 5%,0.2W	91637	CCF50-2-13002J
A10R711	313-1100-00			RES,FXD,FILM:10 OHM,5%,0.2W	91637	CCF50-2-10R00J
A10R712	313-1100-00			RES,FXD,FILM:10 OHM,5%,0.2W	91637	CCF50-2-10R00J
A10R715	313-1103-00			RES,FXD,FILM:10K OHM,5%,0.2W	91637	CCF50-2-10001J
A10R716	313-1103-00			RES,FXD,FILM:10K OHM,5%,0.2W	91637	CCF50-2-10001J
A10R717	313-1102-00			RES,FXD,FILM:1K OHM,5%,0.2W	91637	CCF50-2-10000J
A10R718	313-1102-00			RES,FXD,FILM:1K OHM,5%,0.2W	91637	CCF50-2-10000J
A10R719	313-1200-00			RES,FXD,FILM:20 OHM,5%,0.2W	91637	CCF50-2-20R00J
A10R720	313-1200-00			RES,FXD,FILM:20 OHM,5%,0.2W	91637	CCF50-2-20R00J
A10R721	313-1134-00			RES,FXD,FILM:130K OHM 5%,0.2W	91637	CCF50-2-13002J
A10R722	313-1134-00			RES,FXD,FILM:130K OHM 5%,0.2W	91637	CCF50-2-13002J
A10R723	313-1027-00			RES,FXD,FILM:2.7 OHM,5%,0.2W	57668	TR20JE 02E7
A10R724	311-2234-00			RES,VAR,NONWW:TRMR,5K OHM,20%,0.5W LINEAR	TK2073	GF06UT2 502 M L
A10R725	313-1102-00	B100100	B119999	RES,FXD,FILM:1K OHM,5%,0.2W (2246 MOD A,2Y)	91637	CCF50-2-10000J
A10R725	313-1751-00	B120000		RES,FXD,FILM:750 OHM,5%,0.2W (2246 MOD A,2Y)	91637	CCF50-2-750R0J
A10R725	313-1102-00	B700100	B714999	RES,FXD,FILM:1K OHM,5%,0.2W (2246 1Y)	91637	CCF50-2-10000J
A10R725	313-1751-00	B715000		RES,FXD,FILM:750 OHM,5%,0.2W (2246 1Y)	91637	CCF50-2-750R0J
A10R726	313-1103-00			RES,FXD,FILM:10K OHM,5%,0.2W	91637	CCF50-2-10001J

Component Number	Tektronix Part No.	Serial No. Effective	Serial No. Dscont	Name & Description	Mfr. Code	Mfr. Part No.
A10R727	313-1104-00			RES,FXD,FILM:100K OHM,5%,0.2W	91637	CCF50-2-10002J
A10R728	313-1824-00			RES,FXD,FILM:820K OHM,0.2W,5%	91637	CCF50-2-82002J
A10R729	313-1202-00			RES,FXD,FILM:2K OHM,5%,0.2W	91637	CCF50-2-20000J
A10R730	313-1102-00			RES,FXD,FILM:1K OHM,5%,0.2W	91637	CCF50-2-10000J
A10R731	313-1750-00			RES,FXD,FILM:75 OHM,5%,0.2W	91637	CCF50-2-75R00J
A10R732	313-1750-00			RES,FXD,FILM:75 OHM,5%,0.2W	91637	CCF50-2-75R00J
A10R733	313-1027-00			RES,FXD,FILM:2.7 OHM,5%,0.2W	57668	TR20JE 02E7
A10R734	313-1120-00			RES,FXD,FILM:12 OHM,5%,0.2W	91637	CCF50-2-12R00J
A10R801	313-1431-00	B100100	B110099	RES,FXD,FILM:430 OHM,5%,0.2W (2246 MOD A,2Y)	91637	CCF50-2-430ROJ
A10R801	313-1681-00	B110100		RES,FXD,FILM:680 OHM,5%,0.2W (2246 MOD A,2Y)	91637	CCF50-2-680ROJ
A10R801	313-1431-00	B700100	B710099	RES,FXD,FILM:430 OHM,5%,0.2W (2246 1Y)	91637	CCF50-2-430ROJ
A10R801	313-1681-00	B710100		RES,FXD,FILM:680 OHM,5%,0.2W (2246 1Y)	91637	CCF50-2-680ROJ
A10R802	313-1750-00			RES,FXD,FILM:75 OHM,5%,0.2W	91637	CCF50-2-75R00J
A10R803	313-1562-00	B100100	B110099	RES,FXD,FILM:5.6K OHM,5%,0.2W (2246 MOD A,2Y)	91637	CCF50-2-56000J
A10R803	313-1272-00	B110100		RES,FXD,FILM:2.7K OHM,5%,0.2W (2246 MOD A,2Y)	91637	CCF50-2-27000J
A10R803	313-1562-00	B700100	B710099	RES,FXD,FILM:5.6K OHM,5%,0.2W (2246 1Y)	91637	CCF50-2-56000J
A10R803	313-1272-00	B710100		RES,FXD,FILM:2.7K OHM,5%,0.2W (2246 1Y)	91637	CCF50-2-27000J
A10R804	313-1104-00	B100100	B110099	RES,FXD,FILM:100K OHM,5%,0.2W (2246 MOD A,2Y)	91637	CCF50-2-10002J
A10R804	313-1273-00	B110100		RES,FXD,FILM:27K OHM,5%,0.2W (2246 MOD A,2Y)	91637	CCF50-2-27001J
A10R804	313-1104-00	B700100	B710099	RES,FXD,FILM:100K OHM,5%,0.2W (2246 1Y)	91637	CCF50-2-10002J
A10R804	313-1273-00	B710100		RES,FXD,FILM:27K OHM,5%,0.2W (2246 1Y)	91637	CCF50-2-27001J
A10R805	313-1162-00	B100100	B110099	RES,FXD,FILM:1.6K OHM,5%,0.2W (2246 MOD A,2Y)	91637	CCF50-2-16000J
A10R805	313-1273-00	B110100		RES,FXD,FILM:27K OHM,5%,0.2W (2246 MOD A,2Y)	91637	CCF50-2-27001J
A10R805	313-1162-00	B700100	B710099	RES,FXD,FILM:1.6K OHM,5%,0.2W (2246 1Y)	91637	CCF50-2-16000J
A10R805	313-1273-00	B710100		RES,FXD,FILM:27K OHM,5%,0.2W (2246 1Y)	91637	CCF50-2-27001J
A10R806	323-0310-00			RES,FXD,FILM:16.5K OHM,1%,0.5W,TC=T0	91637	CMF65116G16501F
A10R807	313-1750-00			RES,FXD,FILM:75 OHM,5%,0.2W	91637	CCF50-2-75R00J
A10R808	313-1272-00			RES,FXD,FILM:2.7K OHM,5%,0.2W	91637	CCF50-2-27000J
A10R809	311-2234-00			RES,VAR,NONWW:TRMR,5K OHM,20%,0.5W LINEAR	TK2073	GF06UT2 502 M L
A10R810	313-1272-00			RES,FXD,FILM:2.7K OHM,5%,0.2W	91637	CCF50-2-27000J

Component Number	Tektronix Part No.	Serial No. Effective	Dscont	Name & Description	Mfr. Code	Mfr. Part No.
A10R811	322-3266-00	B100100	B110099	RES,FXD,FILM:5.76K OHM,1%,0.2W,TC=T0MI (2246 MOD A,2Y)	91637	CCF501G57600F
A10R811	322-3265-00	B110100		RES,FXD,FILM:5.62K OHM,1%,0.2W,TC=T0MI (2246 MOD A,2Y)	91637	CCF501G56200F
A10R811	322-3266-00	B700100	B710099	RES,FXD,FILM:5.76K OHM,1%,0.2W,TC=T0MI (2246 1Y)	91637	CCF501G57600F
A10R811	322-3265-00	B710100		RES,FXD,FILM:5.62K OHM,1%,0.2W,TC=T0MI (2246 1Y)	91637	CCF501G56200F
A10R812	322-3266-00	B100100	B110099	RES,FXD,FILM:5.76K OHM,1%,0.2W,TC=T0MI (2246 MOD A,2Y)	91637	CCF501G57600F
A10R812	322-3265-00	B110100		RES,FXD,FILM:5.62K OHM,1%,0.2W,TC=T0MI (2246 MOD A,2Y)	91637	CCF501G56200F
A10R812	322-3266-00	B700100	B710099	RES,FXD,FILM:5.76K OHM,1%,0.2W,TC=T0MI (2246 1Y)	91637	CCF501G57600F
A10R812	322-3265-00	B710100		RES,FXD,FILM:5.62K OHM,1%,0.2W,TC=T0MI (2246 1Y)	91637	CCF501G56200F
A10R813	313-1431-00	B100100	B110099	RES,FXD,FILM:430 OHM,5%,0.2W (2246 MOD A,2Y)	91637	CCF50-2-430ROJ
A10R813	313-1272-00	B110100		RES,FXD,FILM:2.7K OHM,5%,0.2W (2246 MOD A,2Y)	91637	CCF50-2-27000J
A10R813	313-1431-00	B700100	B710099	RES,FXD,FILM:430 OHM,5%,0.2W (2246 1Y)	91637	CCF50-2-430ROJ
A10R813	313-1272-00	B710100		RES,FXD,FILM:2.7K OHM,5%,0.2W (2246 1Y)	91637	CCF50-2-27000J
A10R814	313-1562-00	B100100	B110099	RES,FXD,FILM:5.6K OHM,5%,0.2W (2246 MOD A,2Y)	91637	CCF50-2-56000J
A10R814	313-1272-00	B110100		RES,FXD,FILM:2.7K OHM,5%,0.2W (2246 MOD A,2Y)	91637	CCF50-2-27000J
A10R814	313-1562-00	B700100	B710099	RES,FXD,FILM:5.6K OHM,5%,0.2W (2246 1Y)	91637	CCF50-2-56000J
A10R814	313-1272-00	B710100		RES,FXD,FILM:2.7K OHM,5%,0.2W (2246 1Y)	91637	CCF50-2-27000J
A10R815	313-1104-00	B100100	B110099	RES,FXD,FILM:100K OHM,5%,0.2W (2246 MOD A,2Y)	91637	CCF50-2-10002J
A10R815	313-1104-00	B700100	B710099	RES,FXD,FILM:100K OHM,5%,0.2W (2246 1Y)	91637	CCF50-2-10002J
A10R816	323-0310-00	B100100	B110099	RES,FXD,FILM:16.5K OHM,1%,0.5W,TC=T0 (2246 MOD A,2Y)	91637	CMF65116G16501F
A10R816	323-0310-00	B700100	B710099	RES,FXD,FILM:16.5K OHM,1%,0.5W,TC=T0 (2246 1Y)	91637	CMF65116G16501F
A10R819	313-1750-00	B100100	B110099	RES,FXD,FILM:75 OHM,5%,0.2W (2246 MOD A,2Y)	91637	CCF50-2-75R00J
A10R819	313-1750-00	B700100	B710099	RES,FXD,FILM:75 OHM,5%,0.2W (2246 1Y)	91637	CCF50-2-75R00J
A10R820	322-3402-00	B100100	B119999	RES,FXD,FILM:150K OHM,1%,0.2W,TC=T0MI (2246 MOD A,2Y)	91637	CCF50G15002F
A10R820	322-0402-00	B120000		RES,FXD,FILM:150K OHM,1%,0.25W,TC=T0 (2246 MOD A,2Y)	91637	CMF6042G15002F
A10R820	322-3402-00	B700100	B714999	RES,FXD,FILM:150K OHM,1%,0.2W,TC=T0MI (2246 1Y)	91637	CCF50G15002F

Component Number	Tektronix Part No.	Serial No. Effective	Dscont	Name & Description	Mfr. Code	Mfr. Part No.
A10R820	322-0402-00	B715000		RES,FXD,FILM:150K OHM,1%,0.25W,TC=T0 (2246 1Y)	91637	CMF6042G15002F
A10R821	322-3402-00	B100100	B119999	RES,FXD,FILM:150K OHM,1%,0.2W,TC=T0MI (2246 MOD A,2Y)	91637	CCF50G15002F
A10R821	322-0402-00	B120000		RES,FXD,FILM:150K OHM,1%,0.25W,TC=T0 (2246 MOD A,2Y)	91637	CMF6042G15002F
A10R821	322-3402-00	B700100	B714999	RES,FXD,FILM:150K OHM,1%,0.2W,TC=T0MI (2246 1Y)	91637	CCF50G15002F
A10R821	322-0402-00	B715000		RES,FXD,FILM:150K OHM,1%,0.25W,TC=T0 (2246 1Y)	91637	CMF6042G15002F
A10R822	322-3265-00			RES,FXD,FILM:5.62K OHM,1%,0.2W,TC=T0MI	91637	CCF501G56200F
A10R823	311-2230-00			RES,VAR,NONWW:TRMR,500 OHM,20%,0.50 LINEAR	TK2073	GF06UT2 501 M L
A10R825	311-2234-00			RES,VAR,NONWW:TRMR,5K OHM,20%,0.5W LINEAR	TK2073	GF06UT2 502 M L
A10R826	311-2234-00			RES,VAR,NONWW:TRMR,5K OHM,20%,0.5W LINEAR	TK2073	GF06UT2 502 M L
A10R827	311-2229-00			RES,VAR,NONWW:TRMR,250 OHM,20%,0.5W LINEAR	TK2073	GF06UT2 251 M L
A10R828	301-0203-00	B100100	B110099	RES,FXD,FILM:20K OHM,5%,0.5W (2246 MOD A,2Y)	TK1727	SFR30 2322-182-
A10R828	313-1133-00	B110100		RES,FXD,FILM:13K,5%,0.2W (2246 MOD A,2Y)	91637	CCF50-2-13001J,
A10R828	301-0203-00	B700100	B710099	RES,FXD,FILM:20K OHM,5%,0.5W (2246 1Y)	TK1727	SFR30 2322-182-
A10R828	313-1133-00	B710100		RES,FXD,FILM:13K,5%,0.2W (2246 1Y)	91637	CCF50-2-13001J,
A10R829	301-0203-00	B100100	B110099	RES,FXD,FILM:20K OHM,5%,0.5W (2246 MOD A,2Y)	TK1727	SFR30 2322-182-
A10R829	313-1133-00	B110100		RES,FXD,FILM:13K,5%,0.2W (2246 MOD A,2Y)	91637	CCF50-2-13001J,
A10R829	301-0203-00	B700100	B710099	RES,FXD,FILM:20K OHM,5%,0.5W (2246 1Y)	TK1727	SFR30 2322-182-
A10R829	313-1133-00	B710100		RES,FXD,FILM:13K,5%,0.2W (2246 1Y)	91637	CCF50-2-13001J,
A10R830	313-1133-00	B110100		RES,FXD,FILM:13K,5%,0.2W (2246 MOD A,2Y)	91637	CCF50-2-13001J,
A10R830	313-1133-00	B710100		RES,FXD,FILM:13K,5%,0.2W (2246 1Y)	91637	CCF50-2-13001J,
A10R831	313-1133-00	B110100		RES,FXD,FILM:13K,5%,0.2W (2246 MOD A,2Y)	91637	CCF50-2-13001J,
A10R831	313-1133-00	B710100		RES,FXD,FILM:13K,5%,0.2W (2246 1Y)	91637	CCF50-2-13001J,
A10R836	322-3152-00			RES,FXD,FILM:374 OHM,1%,0.2W,TC=T0MI	91637	CCF501G374ROF
A10R837	313-1100-00			RES,FXD,FILM:10 OHM,5%,0.2W	91637	CCF50-2-10R00J
A10R840	313-1470-00	B100100	B110099	RES,FXD,FILM:47 OHM,5%,0.2W (2246 MOD A,2Y)	91637	CCF50-2-47R00J

Component Number	Tektronix Part No.	Serial No. Effective	Serial No. Dscont	Name & Description	Mfr. Code	Mfr. Part No.
A10R840	313-1470-00	B700100	B710099	RES,FXD,FILM:47 OHM,5%,0.2W (2246 1Y)	91637	CCF50-2-47R00J
A10R841	313-1100-00	B100100	B110099	RES,FXD,FILM:10 OHM,5%,0.2W (2246 MOD A,2Y)	91637	CCF50-2-10R00J
A10R841	313-1100-00	B700100	B710099	RES,FXD,FILM:10 OHM,5%,0.2W (2246 1Y)	91637	CCF50-2-10R00J
A10R842	313-1103-00	B100100	B110099	RES,FXD,FILM:10K OHM,5%,0.2W (2246 MOD A,2Y)	91637	CCF50-2-10001J
A10R842	313-1103-00	B700100	B710099	RES,FXD,FILM:10K OHM,5%,0.2W (2246 1Y)	91637	CCF50-2-10001J
A10R843	313-1751-00	B100100	B110099	RES,FXD,FILM:750 OHM,5%,0.2W (2246 MOD A,2Y)	91637	CCF50-2-750R0J
A10R843	313-1751-00	B700100	B710099	RES,FXD,FILM:750 OHM,5%,0.2W (2246 1Y)	91637	CCF50-2-750R0J
A10R844	313-1751-00	B100100	B110099	RES,FXD,FILM:750 OHM,5%,0.2W (2246 MOD A,2Y)	91637	CCF50-2-750R0J
A10R844	313-1751-00	B700100	B710099	RES,FXD,FILM:750 OHM,5%,0.2W (2246 1Y)	91637	CCF50-2-750R0J
A10R845	313-1100-00	B100100	B110099	RES,FXD,FILM:10 OHM,5%,0.2W (2246 MOD A,2Y)	91637	CCF50-2-10R00J
A10R845	313-1100-00	B700100	B710099	RES,FXD,FILM:10 OHM,5%,0.2W (2246 1Y)	91637	CCF50-2-10R00J
A10R846	322-3058-00	B100100	B110099	RES,FXD,FILM:39.2 OHM,1%,0.2W,TC=T0MI (2246 MOD A,2Y)	91637	CCF50-1G39R20F
A10R846	322-3058-00	B700100	B710099	RES,FXD,FILM:39.2 OHM,1%,0.2W,TC=T0MI (2246 1Y)	91637	CCF50-1G39R20F
A10R847	313-1100-00	B100100	B110099	RES,FXD,FILM:10 OHM,5%,0.2W (2246 MOD A,2Y)	91637	CCF50-2-10R00J
A10R847	313-1100-00	B700100	B710099	RES,FXD,FILM:10 OHM,5%,0.2W (2246 1Y)	91637	CCF50-2-10R00J
A10R848	301-0222-00	B100100	B110099	RES,FXD,FILM:2.2K OHM,5%,0.5W (2246 MOD A,2Y)	TK1727	SFR30 2322-182-
A10R848	301-0222-00	B700100	B710099	RES,FXD,FILM:2.2K OHM,5%,0.5W (2246 1Y)	TK1727	SFR30 2322-182-
A10R849	301-0222-00	B100100	B110099	RES,FXD,FILM:2.2K OHM,5%,0.5W (2246 MOD A,2Y)	TK1727	SFR30 2322-182-
A10R849	301-0222-00	B700100	B710099	RES,FXD,FILM:2.2K OHM,5%,0.5W (2246 1Y)	TK1727	SFR30 2322-182-
A10R850	313-1392-00	B100100	B110099	RES,FXD,FILM:3.9K OHM,5%,0.2W (2246 MOD A,2Y)	91637	CCF50-2-39000J
A10R850	313-1392-00	B700100	B710099	RES,FXD,FILM:3.9K OHM,5%,0.2W (2246 1Y)	91637	CCF50-2-39000J
A10R851	313-1100-00	B100100	B110099	RES,FXD,FILM:10 OHM,5%,0.2W (2246 MOD A,2Y)	91637	CCF50-2-10R00J
A10R851	313-1100-00	B700100	B710099	RES,FXD,FILM:10 OHM,5%,0.2W (2246 1Y)	91637	CCF50-2-10R00J
A10R852	322-3074-00	B100100	B110099	RES,FXD,FILM:57.6 OHM,1%,0.2W,TC=T0MI (2246 MOD A,2Y)	91637	CCF501G57R60F
A10R852	322-3074-00	B700100	B710099	RES,FXD,FILM:57.6 OHM,1%,0.2W,TC=T0MI (2246 1Y)	91637	CCF501G57R60F

Component Number	Tektronix Part No.	Serial No. Effective	Serial No. Dscont	Name & Description	Mfr. Code	Mfr. Part No.
A10R853	313-1470-00	B100100	B110099	RES,FXD,FILM:47 OHM,5%,0.2W (2246 MOD A,2Y)	91637	CCF50-2-47R00J
A10R853	313-1470-00	B700100	B710099	RES,FXD,FILM:47 OHM,5%,0.2W (2246 1Y)	91637	CCF50-2-47R00J
A10R854	313-1201-00			RES,FXD,FILM:200 OHM,5%,0.2W	91637	CCF50-2-200R0J
A10R855	313-1201-00			RES,FXD,FILM:200 OHM,5%,0.2W	91637	CCF50-2-200R0J
A10R856	322-3289-00			RES,FXD,FILM:10K OHM,1%,0.2W,TC=T0	91637	CCF50G10001F
A10R857	322-3265-00			RES,FXD,FILM:5.62K OHM,1%,0.2W,TC=T0MI	91637	CCF501G56200F
A10R858	322-3143-00	B100100	B110099	RES,FXD,FILM:301 OHM,1%,0.2W,TC=T0MI (2246 MOD A,2Y)	91637	CCF501G301ROF
A10R858	322-3143-00	B700100	B710099	RES,FXD,FILM:301 OHM,1%,0.2W,TC=T0MI (2246 1Y)	91637	CCF501G301ROF
A10R860	313-1103-00	B110100		RES,FXD,FILM:10K OHM,5%,0.2W (2246 MOD A,2Y)	91637	CCF50-2-10001J
A10R860	313-1103-00	B710100		RES,FXD,FILM:10K OHM,5%,0.2W (2246 1Y)	91637	CCF50-2-10001J
A10R861	313-1272-00	B110100		RES,FXD,FILM:2.7K OHM,5%,0.2W (2246 MOD A,2Y)	91637	CCF50-2-27000J
A10R861	313-1272-00	B710100		RES,FXD,FILM:2.7K OHM,5%,0.2W (2246 1Y)	91637	CCF50-2-27000J
A10R862	322-3077-00	B110100		RES,FXD,FILM:61.9 OHM,1%,0.2W,TC=T0MI (2246 MOD A,2Y)	91637	CCF501G61R9OF
A10R862	322-3077-00	B710100		RES,FXD,FILM:61.9 OHM,1%,0.2W,TC=T0MI (2246 1Y)	91637	CCF501G61R9OF
A10R863	313-1271-00	B110100		RES,FXD,FILM:270 OHM,5%,0.2W (2246 MOD A,2Y)	91637	CCF50-2-270R0J
A10R863	313-1271-00	B710100		RES,FXD,FILM:270 OHM,5%,0.2W (2246 1Y)	91637	CCF50-2-270R0J
A10R871	313-1103-00	B110100		RES,FXD,FILM:10K OHM,5%,0.2W (2246 MOD A,2Y)	91637	CCF50-2-10001J
A10R871	313-1103-00	B710100		RES,FXD,FILM:10K OHM,5%,0.2W (2246 1Y)	91637	CCF50-2-10001J
A10R872	313-1510-00	B110100		RES,FXD,FILM:51 OHM,5%,0.2W (2246 MOD A,2Y)	91637	CCF501G51R00J
A10R872	313-1510-00	B710100		RES,FXD,FILM:51 OHM,5%,0.2W (2246 1Y)	91637	CCF501G51R00J
A10R873	313-1271-00	B110100		RES,FXD,FILM:270 OHM,5%,0.2W (2246 MOD A,2Y)	91637	CCF50-2-270R0J
A10R873	313-1271-00	B710100		RES,FXD,FILM:270 OHM,5%,0.2W (2246 1Y)	91637	CCF50-2-270R0J
A10R891	313-1681-00	B110100		RES,FXD,FILM:680 OHM,5%,0.2W (2246 MOD A,2Y)	91637	CCF50-2-680ROJ
A10R891	313-1681-00	B710100		RES,FXD,FILM:680 OHM,5%,0.2W (2246 1Y)	91637	CCF50-2-680ROJ
A10R892	313-1750-00	B110100		RES,FXD,FILM:75 OHM,5%,0.2W (2246 MOD A,2Y)	91637	CCF50-2-75R00J

Component Number	Tektronix Part No.	Serial No. Effective	Dscont	Name & Description	Mfr. Code	Mfr. Part No.
A10R892	313-1750-00	B710100		RES,FXD,FILM:75 OHM,5%,0.2W (2246 1Y)	91637	CCF50-2-75R00J
A10R893	313-1391-00	B110100		RES,FXD,FILM:390 OHM,5%,0.2W (2246 MOD A,2Y)	91637	CCF50-2-390R0J
A10R893	313-1391-00	B710100		RES,FXD,FILM:390 OHM,5%,0.2W (2246 1Y)	91637	CCF50-2-390R0J
A10R894	313-1100-00	B110100		RES,FXD,FILM:10 OHM,5%,0.2W (2246 MOD A,2Y)	91637	CCF50-2-10R00J
A10R894	313-1100-00	B710100		RES,FXD,FILM:10 OHM,5%,0.2W (2246 1Y)	91637	CCF50-2-10R00J
A10R896	323-0310-00	B110100		RES,FXD,FILM:16.5K OHM,1%,0.5W,TC=T0 (2246 MOD A,2Y)	91637	CMF65116G16501F
A10R896	323-0310-00	B710100		RES,FXD,FILM:16.5K OHM,1%,0.5W,TC=T0 (2246 1Y)	91637	CMF65116G16501F
A10R897	313-1100-00	B110100		RES,FXD,FILM:10 OHM,5%,0.2W (2246 MOD A,2Y)	91637	CCF50-2-10R00J
A10R897	313-1100-00	B710100		RES,FXD,FILM:10 OHM,5%,0.2W (2246 1Y)	91637	CCF50-2-10R00J
A10R898	313-1100-00	B110100		RES,FXD,FILM:10 OHM,5%,0.2W (2246 MOD A,2Y)	91637	CCF50-2-10R00J
A10R898	313-1100-00	B710100		RES,FXD,FILM:10 OHM,5%,0.2W (2246 1Y)	91637	CCF50-2-10R00J
A10R906	313-1120-00			RES,FXD,FILM:12 OHM,5%,0.2W	91637	CCF50-2-12R00J
A10R907	313-1120-00			RES,FXD,FILM:12 OHM,5%,0.2W	91637	CCF50-2-12R00J
A10R908	313-1120-00			RES,FXD,FILM:12 OHM,5%,0.2W	91637	CCF50-2-12R00J
A10R909	313-1101-00			RES,FXD,FILM:100 OHM,5%,0.2W	91637	CCF50-2-100R0J
A10R910	313-1101-00			RES,FXD,FILM:100 OHM,5%,0.2W	91637	CCF50-2-100R0J
A10R911	311-1239-00			RES,VAR,NONWW:TRMR,2.5K OHM,0.5W	32997	3386X-1-252
A10R915	322-3289-00			RES,FXD,FILM:10K OHM,1%,0.2W,TC=T0	91637	CCF50G10001F
A10R916	322-3289-00			RES,FXD,FILM:10K OHM,1%,0.2W,TC=T0	91637	CCF50G10001F
A10R920	311-2228-00			RES,VAR,NONWW:TRMR,200 OHM,20%,0.5W LINEAR	TK2073	GF06UT2 201 M L
A10R921	307-2131-00			RES NTWK,FXD,FI:PRECESION VOLTAGE DIVIDER H2131	80009	307213100
A10R922	313-1103-00			RES,FXD,FILM:10K OHM,5%,0.2W	91637	CCF50-2-10001J
A10R923	313-1103-00			RES,FXD,FILM:10K OHM,5%,0.2W	91637	CCF50-2-10001J
A10R924	313-1103-00			RES,FXD,FILM:10K OHM,5%,0.2W	91637	CCF50-2-10001J
A10R925	313-1472-00	B120000		RES,FXD,FILM:4.7K OHM,5%,0.2W (2246 MOD A,2Y)	91637	CCF50-2-47000J
A10R925	313-1472-00	B715000		RES,FXD,FILM:4.7K OHM,5%,0.2W (2246 1Y)	91637	CCF50-2-47000J
A10R930	313-1751-00			RES,FXD,FILM:750 OHM,5%,0.2W	91637	CCF50-2-750R0J
A10R931	322-3193-02			RES,FXD,FILM:1K OHM,0.5%,0.2W,TC=T2	91637	CCF501D10000D
A10R932	322-3237-00			RES,FXD,FILM:2.87K OHM,1%,0.2W,TC=T0MI	91637	CCF501G28700F
A10R933	313-1272-00			RES,FXD,FILM:2.7K OHM,5%,0.2W	91637	CCF50-2-27000J
A10R934	313-1122-00			RES,FXD,FILM:1.2K OHM,5%,0.2W	91637	CCF50-2-12000J
A10R935	313-1243-00			RES,FXD,FILM:24K OHM,5%,0.2W	57668	CCF50-1-G2402J
A10R936	322-3489-02			RES,FXD,FILM:3.52K OHM,0.2W,5%	91637	CCF501D35200D
A10R937	322-3126-02			RES,FXD,FILM:200 OHM,0.5%,0.2W,TC=T2	91637	CCF501D200R0D
A10R938	313-1752-00			RES,FXD,FILM:7.5K OHM,5%,0.2W	91637	CCF50-2-75000J

Component Number	Tektronix Part No.	Serial No. Effective	Serial No. Dscont	Name & Description	Mfr. Code	Mfr. Part No.
A10R939	313-1152-00			RES,FXD,FILM:1.5K OHM,5%,0.2W	91637	CCF50-2-15000J
A10R940	313-1122-00			RES,FXD,FILM:1.2K OHM,5%,0.2W	91637	CCF50-2-12000J
A10R941	311-2229-00			RES,VAR,NONWW:TRMR,250 OHM,20%,0.5W LINEAR	TK2073	GF06UT2 251 M L
A10R1001	322-3232-00			RES,FXD,FILM:2.55K OHM,1%,0.2W,TC=T0MI	91637	CCF501G25500F
A10R1002	322-3232-00			RES,FXD,FILM:2.55K OHM,1%,0.2W,TC=T0MI	91637	CCF501G25500F
A10R1003	313-1512-00			RES,FXD,FILM:5.1K OHM,5%,0.2W	91637	CCF50-2-51000J
A10R1004	322-3232-00			RES,FXD,FILM:2.55K OHM,1%,0.2W,TC=T0MI	91637	CCF501G25500F
A10R1005	322-3251-00			RES,FXD,FILM:4.02K OHM,1%,0.2W,TC=T0	91637	CCF501G40200F
A10R1006	322-3184-00			RES,FXD,FILM:806 OHM,1%,0.2W,TC=T0	91637	CCF501G806FOR
A10R1007	322-3251-00			RES,FXD,FILM:4.02K OHM,1%,0.2W,TC=T0	91637	CCF501G40200F
A10R1008	322-3184-00			RES,FXD,FILM:806 OHM,1%,0.2W,TC=T0	91637	CCF501G806FOR
A10R1009	313-1103-00			RES,FXD,FILM:10K OHM,5%,0.2W	91637	CCF50-2-10001J
A10R1010	313-1103-00			RES,FXD,FILM:10K OHM,5%,0.2W	91637	CCF50-2-10001J
A10R1020	313-1272-00			RES,FXD,FILM:2.7K OHM,5%,0.2W	91637	CCF50-2-27000J
A10R1021	313-1512-00			RES,FXD,FILM:5.1K OHM,5%,0.2W	91637	CCF50-2-51000J
A10R1022	313-1272-00			RES,FXD,FILM:2.7K OHM,5%,0.2W	91637	CCF50-2-27000J
A10R1023	313-1512-00			RES,FXD,FILM:5.1K OHM,5%,0.2W	91637	CCF50-2-51000J
A10R1024	313-1272-00			RES,FXD,FILM:2.7K OHM,5%,0.2W	91637	CCF50-2-27000J
A10R1025	313-1512-00			RES,FXD,FILM:5.1K OHM,5%,0.2W	91637	CCF50-2-51000J
A10R1026	313-1100-00			RES,FXD,FILM:10 OHM,5%,0.2W	91637	CCF50-2-10R00J
A10R1027	313-1100-00			RES,FXD,FILM:10 OHM,5%,0.2W	91637	CCF50-2-10R00J
A10R1028	313-1102-00			RES,FXD,FILM:1K OHM,5%,0.2W	91637	CCF50-2-10000J
A10R1101	313-1100-00	B100100	B111186	RES,FXD,FILM:10 OHM,5%,0.2W (2246 MOD A,2Y)	91637	CCF50-2-10R00J
A10R1101	313-1100-00	B700100	B710630	RES,FXD,FILM:10 OHM,5%,0.2W (2246 1Y)	91637	CCF50-2-10R00J
A10R1102	313-1100-00	B100100	B111186	RES,FXD,FILM:10 OHM,5%,0.2W (2246 MOD A,2Y)	91637	CCF50-2-10R00J
A10R1102	313-1100-00	B700100	B710630	RES,FXD,FILM:10 OHM,5%,0.2W (2246 1Y)	91637	CCF50-2-10R00J
A10R1103	313-1102-00			RES,FXD,FILM:1K OHM,5%,0.2W	91637	CCF50-2-10000J
A10R1104	313-1682-00			RES,FXD,FILM:6.8K OHM,5%,0.2W	91637	CCF50-2-68000J
A10R1105	313-1511-00	B110100		RES,FXD,FILM:510 OHM,5%,0.2W (2246 MOD A,2Y)	91637	CCF50-2-510ROJ
A10R1105	313-1511-00	B710100		RES,FXD,FILM:510 OHM,5%,0.2W (2246 1Y)	91637	CCF50-2-510ROJ
A10R1106	313-1511-00	B110100		RES,FXD,FILM:510 OHM,5%,0.2W (2246 MOD A,2Y)	91637	CCF50-2-510ROJ
A10R1106	313-1511-00	B710100		RES,FXD,FILM:510 OHM,5%,0.2W (2246 1Y)	91637	CCF50-2-510ROJ
A10R1108	313-1100-00	B710630		RES,FXD,FILM:10 OHM,5%,0.2W (2246 1Y)	91637	CCF50-2-10R00J
A10R1108	313-1100-00	B111186		RES,FXD,FILM:10 OHM,5%,0.2W (2246 MOD A,2Y)	91637	CCF50-2-10R00J
A10R1110	313-1682-00			RES,FXD,FILM:6.8K OHM,5%,0.2W	91637	CCF50-2-68000J

Component Number	Tektronix Part No.	Serial No. Effective	Dscont	Name & Description	Mfr. Code	Mfr. Part No.
A10R1111	313-1303-00			RES,FXD,FILM:30K OHM,5%,0.2W	91637	CCF50-2-30001J
A10R1112	313-1302-00			RES,FXD,FILM:3K OHM,5%,0.2W	91637	CCF50-2-30000J
A10R1113	313-1101-00			RES,FXD,FILM:100 OHM,5%,0.2W	91637	CCF50-2-100R0J
A10R1114	313-1103-00			RES,FXD,FILM:10K OHM,5%,0.2W	91637	CCF50-2-10001J
A10R1115	313-1682-00			RES,FXD,FILM:6.8K OHM,5%,0.2W	91637	CCF50-2-68000J
A10R1116	313-1102-00			RES,FXD,FILM:1K OHM,5%,0.2W	91637	CCF50-2-10000J
A10R1117	313-1162-00			RES,FXD,FILM:1.6K OHM,5%,0.2W	91637	CCF50-2-16000J
A10R1118	313-1751-00			RES,FXD,FILM:750 OHM,5%,0.2W	91637	CCF50-2-750R0J
A10R1120	313-1682-00			RES,FXD,FILM:6.8K OHM,5%,0.2W	91637	CCF50-2-68000J
A10R1121	313-1303-00			RES,FXD,FILM:30K OHM,5%,0.2W	91637	CCF50-2-30001J
A10R1122	313-1302-00			RES,FXD,FILM:3K OHM,5%,0.2W	91637	CCF50-2-30000J
A10R1123	313-1101-00			RES,FXD,FILM:100 OHM,5%,0.2W	91637	CCF50-2-100R0J
A10R1124	313-1103-00			RES,FXD,FILM:10K OHM,5%,0.2W	91637	CCF50-2-10001J
A10R1125	313-1682-00			RES,FXD,FILM:6.8K OHM,5%,0.2W	91637	CCF50-2-68000J
A10R1126	313-1102-00			RES,FXD,FILM:1K OHM,5%,0.2W	91637	CCF50-2-10000J
A10R1127	313-1162-00			RES,FXD,FILM:1.6K OHM,5%,0.2W	91637	CCF50-2-16000J
A10R1128	313-1751-00			RES,FXD,FILM:750 OHM,5%,0.2W	91637	CCF50-2-750R0J
A10R1131	313-1472-00			RES,FXD,FILM:4.7K OHM,5%,0.2W	91637	CCF50-2-47000J
A10R1132	313-1223-00			RES,FXD,FILM:22K OHM,5%,0.2W	91637	CCF50-2-22001J
A10R1133	313-1104-00			RES,FXD,FILM:100K OHM,5%,0.2W	91637	CCF50-2-10002J
A10R1134	313-1472-00			RES,FXD,FILM:4.7K OHM,5%,0.2W	91637	CCF50-2-47000J
A10R1135	313-1204-00			RES,FXD,FILM:200K,5%,0.2W	91637	CCF50-2-20002J
A10R1136	313-1204-00			RES,FXD,FILM:200K,5%,0.2W	91637	CCF50-2-20002J
A10R1142	313-1223-00			RES,FXD,FILM:22K,OHM,5%,0.2W	91637	CCF50-2-22001J
A10R1143	313-1102-00			RES,FXD,FILM:1K OHM,5%,0.2W	91637	CCF50-2-10000J
A10R1144	313-1753-00			RES,FXD,FILM:75K OHM,5%,0.2W	91637	CCF50-2-75001J
A10R1145	313-1102-00			RES,FXD,FILM:1K OHM,5%,0.2W	91637	CCF50-2-10000J
A10R1150	313-1102-00			RES,FXD,FILM:1K OHM,5%,0.2W	91637	CCF50-2-10000J
A10R1154	315-0205-00			RES,FXD,FILM:2M OHM,5%,0.25W	TK1727	SFR25 2322-181-
A10R1155	315-0205-00			RES,FXD,FILM:2M OHM,5%,0.25W	TK1727	SFR25 2322-181-
A10R1158	313-1100-00			RES,FXD,FILM:10 OHM,5%,0.2W	91637	CCF50-2-10R00J
A10R1159	313-1100-00			RES,FXD,FILM:10 OHM,5%,0.2W	91637	CCF50-2-10R00J
A10R1160	313-1100-00	B110100		RES,FXD,FILM:10 OHM,5%,0.2W (2246 MOD A,2Y)	91637	CCF50-2-10R00J
A10R1160	313-1100-00	B710100		RES,FXD,FILM:10 OHM,5%,0.2W (2246 1Y)	91637	CCF50-2-10R00J
A10R1162	313-1302-00			RES,FXD,FILM:3K OHM,5%,0.2W	91637	CCF50-2-30000J
A10R1163	313-1152-00			RES,FXD,FILM:1.5K OHM,5%,0.2W	91637	CCF50-2-15000J
A10R1170	313-1152-00			RES,FXD,FILM:1.5K OHM,5%,0.2W	91637	CCF50-2-15000J
A10R1210	313-1101-00	B120000		RES,FXD,FILM:100 OHM,5%,0.2W (2246 MOD A,2Y)	91637	CCF50-2-100R0J
A10R1210	313-1101-00	B715000		RES,FXD,FILM:100 OHM,5%,0.2W (2246 1Y)	91637	CCF50-2-100R0J
A10R1211	313-1101-00	B120000		RES,FXD,FILM:100 OHM,5%,0.2W (2246 MOD A,2Y)	91637	CCF50-2-100R0J

Component Number	Tektronix Part No.	Serial No. Effective	Dscont	Name & Description	Mfr. Code	Mfr. Part No.
A10R1211	313-1101-00	B715000		RES,FXD,FILM:100 OHM,5%,0.2W (2246 1Y)	91637	CCF50-2-100R0J
A10R1220	313-1101-00	B120000		RES,FXD,FILM:100 OHM,5%,0.2W (2246 MOD A,2Y)	91637	CCF50-2-100R0J
A10R1220	313-1101-00	B715000		RES,FXD,FILM:100 OHM,5%,0.2W (2246 1Y)	91637	CCF50-2-100R0J
A10R1221	313-1101-00	B120000		RES,FXD,FILM:100 OHM,5%,0.2W (2246 MOD A,2Y)	91637	CCF50-2-100R0J
A10R1221	313-1101-00	B715000		RES,FXD,FILM:100 OHM,5%,0.2W (2246 1Y)	91637	CCF50-2-100R0J
A10R1230	313-1101-00	B120000		RES,FXD,FILM:100 OHM,5%,0.2W (2246 MOD A,2Y)	91637	CCF50-2-100R0J
A10R1230	313-1101-00	B715000		RES,FXD,FILM:100 OHM,5%,0.2W (2246 1Y)	91637	CCF50-2-100R0J
A10R1231	313-1101-00	B120000		RES,FXD,FILM:100 OHM,5%,0.2W (2246 MOD A,2Y)	91637	CCF50-2-100R0J
A10R1231	313-1101-00	B715000		RES,FXD,FILM:100 OHM,5%,0.2W (2246 1Y)	91637	CCF50-2-100R0J
A10R1240	313-1101-00	B120000		RES,FXD,FILM:100 OHM,5%,0.2W (2246 MOD A,2Y)	91637	CCF50-2-100R0J
A10R1240	313-1101-00	B715000		RES,FXD,FILM:100 OHM,5%,0.2W (2246 1Y)	91637	CCF50-2-100R0J
A10R1241	313-1101-00	B120000		RES,FXD,FILM:100 OHM,5%,0.2W (2246 MOD A,2Y)	91637	CCF50-2-100R0J
A10R1241	313-1101-00	B715000		RES,FXD,FILM:100 OHM,5%,0.2W (2246 1Y)	91637	CCF50-2-100R0J
A10R1250	322-3059-00	B120000		RES,FXD,FILM:40.2 OHM,1%,0.2W,TC=T0MI (2246 MOD A,2Y)	91637	CCF50-2G40R20FT
A10R1250	322-3059-00	B715000		RES,FXD,FILM:40.2 OHM,1%,0.2W,TC=T0MI (2246 1Y)	91637	CCF50-2G40R20FT
A10R1251	322-3059-00	B120000		RES,FXD,FILM:40.2 OHM,1%,0.2W,TC=T0MI (2246 MOD A,2Y)	91637	CCF50-2G40R20FT
A10R1251	322-3059-00	B715000		RES,FXD,FILM:40.2 OHM,1%,0.2W,TC=T0MI (2246 1Y)	91637	CCF50-2G40R20FT
A10R1260	313-1102-00	B120000		RES,FXD,FILM:1K OHM,5%,0.2W (2246 MOD A,2Y)	91637	CCF50-2-10000J
A10R1260	313-1102-00	B715000		RES,FXD,FILM:1K OHM,5%,0.2W (2246 1Y)	91637	CCF50-2-10000J
A10R1284	313-1820-00	B120000		RES,FXD,FILM:82 OHM,5%,0.2W (2246 MOD A,2Y)	91637	CCF50-2-82R00J
A10R1284	313-1820-00	B715000		RES,FXD,FILM:82 OHM,5%,0.2W (2246 1Y)	91637	CCF50-2-82R00J
A10R1285	313-1820-00	B120000		RES,FXD,FILM:82 OHM,5%,0.2W (2246 MOD A,2Y)	91637	CCF50-2-82R00J
A10R1285	313-1820-00	B715000		RES,FXD,FILM:82 OHM,5%,0.2W (2246 1Y)	91637	CCF50-2-82R00J
A10R2116	311-2329-00	B700100	B710099	RES,VAR,NONWW:TRIMMER,5K OHM,10% (2246 1Y)	32997	3386R-EA5-502
A10R2116	311-2329-00	B100100	B110099	RES,VAR,NONWW:TRIMMER,5K OHM,10% (2246 MOD A,2Y)	32997	3386R-EA5-502

Component Number	Tektronix Part No.	Serial No. Effective	Dscont	Name & Description	Mfr. Code	Mfr. Part No.
A10R2701	322-3112-00			RES,FXD,FILM:143 OHM,1%,0.2W,TC=T0MI	91637	CCF501G143R0F
A10R2702	313-1393-00			RES,FXD,FILM:39K OHM,5%,0.2W	91637	CCF50-2-39001J
A10R2703	322-3282-00			RES,FXD,FILM:8.45K OHM,1%,0.2W,TC=T0MI	91637	CCF501G84500F
A10R2704	322-3164-00			RES,FXD,FILM:499 OHM,1%,0.2W,TC=T0MI	91637	CCF501G499R0F
A10R2705	313-1102-00			RES,FXD,FILM:1K OHM,5%,0.2W	91637	CCF50-2-10000J
A10R2706	313-1103-00			RES,FXD,FILM:10K OHM,5%,0.2W	91637	CCF50-2-10001J
A10R2708	322-3289-00			RES,FXD,FILM:10K OHM,1%,0.2W,TC=T0	91637	CCF50G10001F
A10R2709	322-3289-00			RES,FXD,FILM:10K OHM,1%,0.2W,TC=T0	91637	CCF50G10001F
A10R2710	313-1331-00			RES,FXD,FILM:330 OHM,5%,0.2W	91637	CCF50-2-330R0J
A10R2711	313-1333-00			RES,FXD,FILM:33K OHM,5%,0.2W	91637	CCF50-2-33001J
A10R2712	313-1333-00			RES,FXD,FILM:33K OHM,5%,0.2W	91637	CCF50-2-33001J
A10R2713	313-1333-00			RES,FXD,FILM:33K OHM,5%,0.2W	91637	CCF50-2-33001J
A10R2714	313-1333-00			RES,FXD,FILM:33K OHM,5%,0.2W	91637	CCF50-2-33001J
A10R2715	313-1104-00			RES,FXD,FILM:100K OHM,5%,0.2W	91637	CCF50-2-10002J
A10R2716	313-1333-00			RES,FXD,FILM:33K OHM,5%,0.2W	91637	CCF50-2-33001J
A10R2717	313-1562-00			RES,FXD,FILM:5.6K OHM,5%,0.2W	91637	CCF50-2-56000J
A10R2718	313-0750-00			RES,FXD,CMPSN:75 OHM,5%,0.17W	56845	CCF50-2-G68R0J
A10R2719	311-2236-00			RES,VAR,NONWW:TRMR,20K OHM,20%,0.5W LINEAR	TK2073	GF06UT2 203 M L
A10R2720	315-0203-00			RES,FXD,FILM:20K OHM,5%,0.25W	TK1727	SFR25 2322-181-
A10R2721	315-0472-00			RES,FXD,FILM:4.7K OHM,5%,0.25W	TK1727	SFR25 2322-181-
A10R2722	315-0244-00			RES,FXD,FILM:240K OHM,5%,0.25W	TK1727	SFR25 2322-181-
A10R2723	315-0511-00			RES,FXD,FILM:510 OHM,5%,0.25W	TK1727	SFR25 2322-181-
A10R2724	315-0625-00			RES,FXD,FILM:6.2M OHM,5%,0.25W	TK1727	SFR25 2322-181-
A10R2726	313-1101-00			RES,FXD,FILM:100 OHM,5%,0.2W	91637	CCF50-2-100R0J
A10R2727	322-3213-00			RES,FXD,FILM:1.62K OHM,1%,0.2W,TC=T0	91637	CCF501G16200F
A10R2728	313-1200-00			RES,FXD,FILM:20 OHM,5%,0.2W	91637	CCF50-2-20R00J
A10R2729	322-3210-00			RES,FXD,FILM:1.5K OHM,1%,0.2W,TC=T0	91637	CCF501G15000F
A10R2733	313-1102-00			RES,FXD,FILM:1K OHM,5%,0.2W	91637	CCF50-2-10000J
A10R2734	313-1101-00			RES,FXD,FILM:100 OHM,5%,0.2W	91637	CCF50-2-100R0J
A10R2735	315-0122-00			RES,FXD,FILM:1.2K OHM,5%,0.25W	TK1727	SFR25 2322-181-
A10R2736	301-0203-00			RES,FXD,FILM:20K OHM,5%,0.5W	TK1727	SFR30 2322-182-
A10R2737	313-1104-00			RES,FXD,FILM:100K OHM,5%,0.2W	91637	CCF50-2-10002J
A10R2738	313-1333-00			RES,FXD,FILM:33K OHM,5%,0.2W	91637	CCF50-2-33001J
A10R2739	313-1752-00			RES,FXD,FILM:7.5K OHM,5%,0.2W	91637	CCF50-2-75000J
A10R2740	315-0750-00			RES,FXD,FILM:75 OHM,5%,0.25W	TK1727	SFR25 2322-181-
A10R2741	315-0472-00			RES,FXD,FILM:4.7K OHM,5%,0.25W	TK1727	SFR25 2322-181-
A10R2742	315-0244-00			RES,FXD,FILM:240K OHM,5%,0.25W	TK1727	SFR25 2322-181-
A10R2743	315-0122-00			RES,FXD,FILM:1.2K OHM,5%,0.25W	TK1727	SFR25 2322-181-
A10R2745	315-0122-00			RES,FXD,FILM:1.2K OHM,5%,0.25W	TK1727	SFR25 2322-181-
A10R2750	315-0511-00			RES,FXD,FILM:510 OHM,5%,0.25W	TK1727	SFR25 2322-181-

Component Number	Tektronix Part No.	Serial No. Effective	Serial No. Dscont	Name & Description	Mfr. Code	Mfr. Part No.
A10R2751	315-0625-00			RES,FXD,FILM:6.2M OHM,5%,0.25W	TK1727	SFR25 2322-181-
A10R2758	311-1933-00			RES,VAR,NONWW:PNL,5M OHM,10%,0.5W	12697	23M909
A10R2760	307-2173-00			RES NTWK,FXD,FI:HIGH VOLTAGE,FINISHEDH2173	80009	307217300
A10R2765	322-3188-00			RES,FXD,FILM:887 OHM,1%,0.2W,TC=T0MI	91637	CCF501G887R0F
A10R2783	313-1101-00			RES,FXD,FILM:100 OHM,5%,0.2W	91637	CCF50-2-100R0J
A10R2784	311-2239-00			RES,VAR,NONWW:TRMR,100K OHM,20%,0.5W LINEAR	TK2073	GF06UT2 104 M L
A10R2785	313-1102-00			RES,FXD,FILM:1K OHM,5%,0.2W	91637	CCF50-2-10000J
A10R2786	313-1753-00			RES,FXD,FILM:75K OHM,5%,0.2W	91637	CCF50-2-75001J
A10R2787	313-1333-00			RES,FXD,FILM:33K OHM,5%,0.2W	91637	CCF50-2-33001J
A10R2788	311-2239-00			RES,VAR,NONWW:TRMR,100K OHM,20%,0.5W LINEAR	TK2073	GF06UT2 104 M L
A10R2789	313-1102-00			RES,FXD,FILM:1K OHM,5%,0.2W	91637	CCF50-2-10000J
A10R2795	322-3268-00			RES,FXD,FILM:6.04K OHM,1%,0.2W,TC=T0MI	91637	CCF501G60400F
A10R2796	313-1100-00			RES,FXD,FILM:10 OHM,5%,0.2W	91637	CCF50-2-10R00J
A10RT201	307-0181-00			RES,THERMAL:100K OHM,10%,NTC	14193	K10-10002K
A10U112	165-2232-00	B100100	B101582	MICROCKT,LINEAR:BUFFER AMPLIFIER (2246 MOD A,2Y)	80009	165223200
A10U112	165-2232-01	B101583		MICROCKT,LINEAR:BUFFER AMPLIFIER W/3 GAIN SETTINGS (2246 MOD A,2Y)	80009	165223201
A10U112	165-2232-00	B700100	B700493	MICROCKT,LINEAR:BUFFER AMPLIFIER (2246 1Y)	80009	165223200
A10U112	165-2232-01	B700494		MICROCKT,LINEAR:BUFFER AMPLIFIER W/3 GAIN SETTINGS (2246 1Y)	80009	165223201
A10U122	165-2232-00	B100100	B101582	MICROCKT,LINEAR:BUFFER AMPLIFIER (2246 MOD A,2Y)	80009	165223200
A10U122	165-2232-01	B101583		MICROCKT,LINEAR:BUFFER AMPLIFIER W/3 GAIN SETTINGS (2246 MOD A,2Y)	80009	165223201
A10U122	165-2232-00	B700100	B700493	MICROCKT,LINEAR:BUFFER AMPLIFIER (2246 1Y)	80009	165223200
A10U122	165-2232-01	B700494		MICROCKT,LINEAR:BUFFER AMPLIFIER W/3 GAIN SETTINGS (2246 1Y)	80009	165223201
A10U171	156-0796-00			IC,DIGITAL:CMOS,SHIFT REGISTER;8-STAGE SHIFT/STORE, 3-STATE	04713	MC14094BCP
A10U172	156-0796-00			IC,DIGITAL:CMOS,SHIFT REGISTER;8-STAGE SHIFT/STORE, 3-STATE	04713	MC14094BCP
A10U173	156-0796-00	B100100	B119999	IC,DIGITAL:CMOS,SHIFT REGISTER;8-STAGE SHIFT/STORE, 3-STATE (2246 MOD A,2Y)	04713	MC14094BCP

Component Number	Tektronix Part No.	Serial No. Effective	Serial No. Dscont	Name & Description	Mfr. Code	Mfr. Part No.
A10U173	156-3944-00	B120000		IC,DIGITAL:HCTCMOS,REGISTER;8-STAGE SHIFT AND STORE BUS REGISTER (2246 MOD A,2Y)	18324	74HCT4094N
A10U173	156-0796-00	B700100	B714999	IC,DIGITAL:CMOS,SHIFT REGISTER;8-STAGE SHIFT/STORE, 3-STATE (2246 1Y)	04713	MC14094BCP
A10U173	156-3944-00	B715000		IC,DIGITAL:HCTCMOS,REGISTER;8-STAGE SHIFT AND STORE BUS REGISTER (2246 1Y)	18324	74HCT4094N
A10U174	156-1190-00			IC,LINEAR:BIPOLAR,TRANSISTOR ARRAY;SEVEN,NPN,COMMON COLLECTOR,OPEN EMITTER	34371	CA3082-98
A10U175	156-1190-00			IC,LINEAR:BIPOLAR,TRANSISTOR ARRAY;SEVEN,NPN,COMMON COLLECTOR,OPEN EMITTER	34371	CA3082-98
A10U201	156-2571-00			IC,MISC:HCMOS,ANALOG MUX;TRIPLE SPDT	04713	MC74HC4053N/J
A10U202	156-2571-00			IC,MISC:HCMOS,ANALOG MUX;TRIPLE SPDT	04713	MC74HC4053N/J
A10U203	156-2667-00			MICROCKT,LINEAR:QUAD LOW PWR, OPERATIONAL AMPLIFIERS MC3403,14 DIP,MI	01295	MC3403N
A10U210	234-0238-20			QUICK CHIP:VERTICAL PREAMP,PACKAGE IC	80009	234023820
A10U220	234-0238-20			QUICK CHIP:VERTICAL PREAMP,PACKAGE IC	80009	234023820
A10U230	234-0238-20			QUICK CHIP:VERTICAL PREAMP,PACKAGE IC	80009	234023820
A10U240	234-0238-20			QUICK CHIP:VERTICAL PREAMP,PACKAGE IC	80009	234023820
A10U260	156-0067-00			IC,LINEAR:BIPOLAR,OP-AMP	04713	MC1741CP1
A10U280	156-1349-00			IC,LINEAR:BIPOLAR,AMPLIFIER;DUAL INDEPENDENT DIFFERENTIAL AMPLIFIER	34371	CA3054-98
A10U301	156-2571-00			IC,MISC:HCMOS,ANALOG MUX;TRIPLE SPDT	04713	MC74HC4053N/J
A10U302	156-0796-00			IC,DIGITAL:CMOS,SHIFT REGISTER;8-STAGE SHIFT/STORE, 3-STATE	04713	MC14094BCP
A10U303	156-0796-00			IC,DIGITAL:CMOS,SHIFT REGISTER;8-STAGE SHIFT/STORE, 3-STATE	04713	MC14094BCP
A10U304	156-2873-00			MICROCKT,LINEAR:DUAL BIFET,OPERATIONAL AMPLIFIER	04713	MC34082AP (D/C
A10U307	156-0514-00			IC,MISC:CMOS,ANALOG MUX;DUAL 4 CHANNEL	04713	MC14052BCP
A10U308	156-0514-00			IC,MISC:CMOS,ANALOG MUX;DUAL 4 CHANNEL	04713	MC14052BCP
A10U309	156-0158-07	B100100	B119999	IC,LINEAR:BIPOLAR,OP-AMP (2246 MOD A,2Y)	01295	MC1458P
A10U309	156-0158-00	B120000		IC,LINEAR:BIPOLAR,OP-AMP;DUAL (2246 MOD A,2Y)	04713	MC1458P1
A10U309	156-0158-07	B700100	B714999	IC,LINEAR:BIPOLAR,OP-AMP (2246 1Y)	01295	MC1458P
A10U309	156-0158-00	B715000		IC,LINEAR:BIPOLAR,OP-AMP;DUAL (2246 1Y)	04713	MC1458P1
A10U310	156-0514-00			IC,MISC:CMOS,ANALOG MUX;DUAL 4 CHANNEL	04713	MC14052BCP
A10U311	156-0514-00			IC,MISC:CMOS,ANALOG MUX;DUAL 4 CHANNEL	04713	MC14052BCP
A10U313	156-1349-00			IC,LINEAR:BIPOLAR,AMPLIFIER;DUAL INDEPENDENT DIFFERENTIAL AMPLIFIER	34371	CA3054-98
A10U315	156-1640-00			IC,DIGITAL:ECL,RECEIVER;TRIPLE LINE	04713	MC10H116(L OR P
A10U316	156-0308-00			IC,DIGITAL:ECL,RECEIVER;QUAD DIFFERENTIAL LINE	04713	MC10115L OR P
A10U421	234-0239-20	B700100	B710099	QUICK CHIP:TRIGGER,IC PACKAGE (2246 1Y)	80009	234023920

Component Number	Tektronix Part No.	Serial No. Effective	Serial No. Dscont	Name & Description	Mfr. Code	Mfr. Part No.
A10U421	234-0239-30	B710100	B710999	QUICK CHIP:TRIGGER IC PACKAGE (2246 1Y)	80009	234023930
A10U421	234-0239-31	B711000		QUICK CHIP:TRIGGER CIRCUIT,28PLCC W/AU LEAD (2246 1Y)	80009	234023931
A10U421	234-0239-20	B100100	B110099	QUICK CHIP:TRIGGER,IC PACKAGE (2246 MOD A,2Y)	80009	234023920
A10U421	234-0239-30	B110100	B112868	QUICK CHIP:TRIGGER IC PACKAGE (2246 MOD A,2Y)	80009	234023930
A10U421	234-0239-31	B112869		QUICK CHIP:TRIGGER CIRCUIT,28PLCC W/AU LEAD (2246 MOD A,2Y)	80009	234023931
A10U431	234-0239-20	B700100	B710099	QUICK CHIP:TRIGGER,IC PACKAGE (2246 1Y)	80009	234023920
A10U431	234-0239-30	B710100	B710999	QUICK CHIP:TRIGGER IC PACKAGE (2246 1Y)	80009	234023930
A10U431	234-0239-31	B711000		QUICK CHIP:TRIGGER CIRCUIT,28PLCC W/AU LEAD (2246 1Y)	80009	234023931
A10U431	234-0239-20	B100100	B110099	QUICK CHIP:TRIGGER,IC PACKAGE (2246 MOD A,2Y)	80009	234023920
A10U431	234-0239-30	B110100	B112868	QUICK CHIP:TRIGGER IC PACKAGE (2246 MOD A,2Y)	80009	234023930
A10U431	234-0239-31	B112869		QUICK CHIP:TRIGGER CIRCUIT,28PLCC W/AU LEAD (2246 MOD A,2Y)	80009	234023931
A10U441	156-2027-00			IC,DIGITAL:HCMOS,GATE;HEX INV	27014	MM74HC04N
A10U442	156-1640-00	B110100		IC,DIGITAL:ECL,RECEIVER;TRIPLE LINE (2246 MOD A,2Y)	04713	MC10H116(L OR P
A10U442	156-1640-00	B710100		IC,DIGITAL:ECL,RECEIVER;TRIPLE LINE (2246 1Y)	04713	MC10H116(L OR P
A10U501	156-0469-00			IC,DIGITAL:LSTTL,DEMUX/DECODER;3-TO-8 DECODER	01295	SN74LS138 (N OR
A10U502	156-0768-00			IC,DIGITAL:LSTTL,SHIFT REGISTER;8-BIT BIDIRECTIONAL UNIVERSAL	01295	SN74LS194AN
A10U503	156-0804-00			IC,DIGITAL:LSTTL,LATCH;QUADRUPLE S-R	01295	SN74LS279AN
A10U506	156-0513-00			IC,MISC:CMOS,ANALOG MUX;8 CHANNEL	04713	MC14051B (CP OR
A10U600	156-2655-00			MICROCKT,DGTL:CMOS,SEMI CUSTOM,STD CELL,SLOW LOGIC	66302	VF4247PC CC0001
A10U601	156-1126-00			IC,LINEAR:BIPOLAR,COMPARATOR;OPEN COLLECTOR,200NS	01295	LM311P
A10U602	156-2654-00			MICROCKT,DGTL:ECL,SEMI CUSTOM,FAST LOGIC SCX32205LB04,40 DIPCERAMIC ONLY	04713	SC32205LB04
A10U603	156-0631-00			IC,DIGITAL:ECL,GATE;QUAD 2-INPUT OR/NOR	04713	MC10101(L OR P)
A10U604	156-0860-00			IC,DIGITAL:ECL,RECEIVER;TRIPLE LINE	04713	MC10116P
A10U606	156-0140-00			IC,DIGITAL:TTL,BUFFER/DRIVER;HEX BUFFER, OC	01295	SN7417N
A10U701	155-0322-00			MICROCKT,LINEAR:VERTICAL OUTPUT AMPLIFIERM429	80009	155032200

Component Number	Tektronix Part No.	Serial No. Effective	Serial No. Dscont	Name & Description	Mfr. Code	Mfr. Part No.
A10U702	156-1126-00			IC,LINEAR:BIPOLAR,COMPARATOR;OPEN COLLECTOR,200NS	01295	LM311P
A10U801	156-0158-07	B100100	B119999	IC,LINEAR:BIPOLAR,OP-AMP (2246 MOD A,2Y)	01295	MC1458P
A10U801	156-0158-00	B120000		IC,LINEAR:BIPOLAR,OP-AMP;DUAL (2246 MOD A,2Y)	04713	MC1458P1
A10U801	156-0158-07	B700100	B714999	IC,LINEAR:BIPOLAR,OP-AMP (2246 1Y)	01295	MC1458P
A10U801	156-0158-00	B715000		IC,LINEAR:BIPOLAR,OP-AMP;DUAL (2246 1Y)	04713	MC1458P1
A10U802	234-0401-21			QUICK CHIP:GPS HORIZ PREAMP	80009	234040121
A10U901	156-2702-00			IC,LINEAR:BIPOLAR,OP-AMP;DUAL,HIGH OUTPUT CURRENT	57668	BA4560
A10U930	156-0158-07	B100100	B119999	IC,LINEAR:BIPOLAR,OP-AMP (2246 MOD A,2Y)	01295	MC1458P
A10U930	156-0158-00	B120000		IC,LINEAR:BIPOLAR,OP-AMP;DUAL (2246 MOD A,2Y)	04713	MC1458P1
A10U930	156-0158-07	B700100	B714999	IC,LINEAR:BIPOLAR,OP-AMP (2246 1Y)	01295	MC1458P
A10U930	156-0158-00	B715000		IC,LINEAR:BIPOLAR,OP-AMP;DUAL (2246 1Y)	04713	MC1458P1
A10U931	156-2605-00			IC,MISC:HCMOS,ANALOG MUX;8 CHANNEL	04713	MC74HC4051N/J
A10U932	156-1173-00			IC,LINEAR:BIPOLAR,VOLTAGE REFERENCE;POSITIVE,2.5V,1.0%,40PPM,SERIES	04713	MC1403U
A10U1001	156-0495-00			IC,LINEAR:BIPOLAR,OP-AMP;QUAD,SINGLE SUPPLY	01295	LM324N
A10U1101	156-2873-00			MICROCKT,LINEAR:DUAL BIFET,OPERATIONAL AMPLIFIER	04713	MC34082AP (D/C
A10U1102	156-1225-00			IC,LINEAR:BIPOLAR,COMPARATOR;DUAL,OPEN COLLECTOR,300NS	01295	LM393P
A10U1103	156-0796-00			IC,DIGITAL:CMOS,SHIFT REGISTER;8-STAGE SHIFT/STORE, 3-STATE	04713	MC14094BCP
A10U1104	156-0515-00			IC,MISC:CMOS,ANALOG MUX;TRIPLE SPDT	04713	MC14053BCP
A10U1106	156-0515-00			IC,MISC:CMOS,ANALOG MUX;TRIPLE SPDT	04713	MC14053BCP
A10VR301	152-0437-00			DIODE,ZENER:,;8.2V,2%,0.4W	04713	1N959CRL
A10VR302	152-0437-00			DIODE,ZENER:,;8.2V,2%,0.4W	04713	1N959CRL
A10VR303	152-0437-00			DIODE,ZENER:,;8.2V,2%,0.4W	04713	1N959CRL
A10VR304	152-0437-00			DIODE,ZENER:,;8.2V,2%,0.4W	04713	1N959CRL
A10VR308	152-0437-00			DIODE,ZENER:,;8.2V,2%,0.4W	04713	1N959CRL
A10VR309	152-0166-00			DIODE,ZENER:,;6.2V,5%,0.4W	04713	SZ11738RL
A10VR310	152-0166-00			DIODE,ZENER:,;6.2V,5%,0.4W	04713	SZ11738RL
A10VR311	152-0168-00			DIODE,ZENER:,;12V,5%,0.4W	04713	1N963BRL
A10VR312	152-0168-00			DIODE,ZENER:,;12V,5%,0.4W	04713	1N963BRL
A10VR801	152-0243-00	B100100	B110099	DIODE,ZENER:,;15V,5%,0.4W (2246 MOD A,2Y)	04713	SZ13203 (1N965B
A10VR801	152-0055-00	B110100		DIODE,ZENER:,;11V,5%,0.4W (2246 MOD A,2Y)	04713	SZG35009K1 1N96
A10VR801	152-0243-00	B700100	B710099	DIODE,ZENER:,;15V,5%,0.4W (2246 1Y)	04713	SZ13203 (1N965B
A10VR801	152-0055-00	B710100		DIODE,ZENER:,;11V,5%,0.4W (2246 1Y)	04713	SZG35009K1 1N96

Component Number	Tektronix Part No.	Serial No. Effective	Serial No. Dscont	Name & Description	Mfr. Code	Mfr. Part No.
A10VR802	152-0265-00	B100100	B110099	DIODE,ZENER:,;24V,5%,0.4W (2246 MOD A,2Y)	04713	1N970BRL
A10VR802	152-0265-00	B700100	B710099	DIODE,ZENER:,;24V,5%,0.4W (2246 1Y)	04713	1N970BRL
A10VR2701	152-0306-00			SEMICOND DVC,DI:ZEN,SI,9.1V,5%,0.4W,DO-71N9 60B,MI	04713	1N960BRL
A10W9	198-5523-00			WIRE SET,ELEC:SOCKET ASSY CRT,	0J7N9	PER TEK DRAWING
A10W17	196-3069-00			LEAD,ELECTRICAL:22 AWG,5.0 L,9-N	0J7N9	PER TEK DRAWING
A10W18	196-3069-00			LEAD,ELECTRICAL:22 AWG,5.0 L,9-N	0J7N9	PER TEK DRAWING
A10W19	196-3069-00			LEAD,ELECTRICAL:22 AWG,5.0 L,9-N	0J7N9	PER TEK DRAWING
A10W20	196-3069-00			LEAD,ELECTRICAL:22 AWG,5.0 L,9-N	0J7N9	PER TEK DRAWING
A10W100	131-0566-00			BUS,CONDUCTOR:DUMMY RES,0.094 OD X 0.225L	24546	OMA 07
A10W101	131-0566-00	B110100		BUS,CONDUCTOR:DUMMY RES,0.094 OD X 0.225L (2246 MOD A,2Y)	24546	OMA 07
A10W101	131-0566-00	B710100		BUS,CONDUCTOR:DUMMY RES,0.094 OD X 0.225L (2246 1Y)	24546	OMA 07
A10W102	131-0566-00			BUS,CONDUCTOR:DUMMY RES,0.094 OD X 0.225L	24546	OMA 07
A10W103	131-0566-00			BUS,CONDUCTOR:DUMMY RES,0.094 OD X 0.225L	24546	OMA 07
A10W200	131-0566-00			BUS,CONDUCTOR:DUMMY RES,0.094 OD X 0.225L	24546	OMA 07
A10W201	131-0566-00			BUS,CONDUCTOR:DUMMY RES,0.094 OD X 0.225L	24546	OMA 07
A10W202	131-0566-00	B100100	B119999	BUS,CONDUCTOR:DUMMY RES,0.094 OD X 0.225L (2246 MOD A,2Y)	24546	OMA 07
A10W202	131-0566-00	B700100	B714999	BUS,CONDUCTOR:DUMMY RES,0.094 OD X 0.225L (2246 1Y)	24546	OMA 07
A10W203	131-0566-00			BUS,CONDUCTOR:DUMMY RES,0.094 OD X 0.225L	24546	OMA 07
A10W204	131-0566-00	B120000		BUS,CONDUCTOR:DUMMY RES,0.094 OD X 0.225L (2246 MOD A,2Y)	24546	OMA 07
A10W204	131-0566-00	B715000		BUS,CONDUCTOR:DUMMY RES,0.094 OD X 0.225L (2246 1Y)	24546	OMA 07
A10W205	131-0566-00			BUS,CONDUCTOR:DUMMY RES,0.094 OD X 0.225L	24546	OMA 07
A10W206	131-0566-00			BUS,CONDUCTOR:DUMMY RES,0.094 OD X 0.225L	24546	OMA 07
A10W207	131-0566-00			BUS,CONDUCTOR:DUMMY RES,0.094 OD X 0.225L	24546	OMA 07
A10W208	131-0566-00			BUS,CONDUCTOR:DUMMY RES,0.094 OD X 0.225L	24546	OMA 07
A10W209	131-0566-00			BUS,CONDUCTOR:DUMMY RES,0.094 OD X 0.225L	24546	OMA 07
A10W210	131-0566-00			BUS,CONDUCTOR:DUMMY RES,0.094 OD X 0.225L	24546	OMA 07
A10W211	195-0970-00			LEAD,ELECTRICAL:26 AWG,3.0 L,0-N	80009	195097000
A10W223	131-0566-00			BUS,CONDUCTOR:DUMMY RES,0.094 OD X 0.225L	24546	OMA 07
A10W231	131-0566-00			BUS,CONDUCTOR:DUMMY RES,0.094 OD X 0.225L	24546	OMA 07
A10W232	131-0566-00			BUS,CONDUCTOR:DUMMY RES,0.094 OD X 0.225L	24546	OMA 07
A10W235	131-0566-00	B100100	B119999	BUS,CONDUCTOR:DUMMY RES,0.094 OD X 0.225L (2246 MOD A,2Y)	24546	OMA 07
A10W235	131-0566-00	B700100	B714999	BUS,CONDUCTOR:DUMMY RES,0.094 OD X 0.225L (2246 1Y)	24546	OMA 07
A10W304	131-0566-00			BUS,CONDUCTOR:DUMMY RES,0.094 OD X 0.225L	24546	OMA 07
A10W305	131-0566-00			BUS,CONDUCTOR:DUMMY RES,0.094 OD X 0.225L	24546	OMA 07

Component Number	Tektronix Part No.	Serial No. Effective	Serial No. Dscont	Name & Description	Mfr. Code	Mfr. Part No.
A10W401	131-0566-00			BUS,CONDUCTOR:DUMMY RES,0.094 OD X 0.225L	24546	OMA 07
A10W403	131-0566-00	B100100	B110099	BUS,CONDUCTOR:DUMMY RES,0.094 OD X 0.225L (2246 MOD A,2Y)	24546	OMA 07
A10W403	131-0566-00	B700100	B710099	BUS,CONDUCTOR:DUMMY RES,0.094 OD X 0.225L (2246 1Y)	24546	OMA 07
A10W404	131-0566-00	B100100	B110099	BUS,CONDUCTOR:DUMMY RES,0.094 OD X 0.225L (2246 MOD A,2Y)	24546	OMA 07
A10W404	131-0566-00	B700100	B710099	BUS,CONDUCTOR:DUMMY RES,0.094 OD X 0.225L (2246 1Y)	24546	OMA 07
A10W405	131-0566-00	B100100	B110099	BUS,CONDUCTOR:DUMMY RES,0.094 OD X 0.225L (2246 MOD A,2Y)	24546	OMA 07
A10W405	131-0566-00	B700100	B710099	BUS,CONDUCTOR:DUMMY RES,0.094 OD X 0.225L (2246 1Y)	24546	OMA 07
A10W406	131-0566-00			BUS,CONDUCTOR:DUMMY RES,0.094 OD X 0.225L	24546	OMA 07
A10W407	131-0566-00	B100100	B110099	BUS,CONDUCTOR:DUMMY RES,0.094 OD X 0.225L (2246 MOD A,2Y)	24546	OMA 07
A10W407	131-0566-00	B700100	B710099	BUS,CONDUCTOR:DUMMY RES,0.094 OD X 0.225L (2246 1Y)	24546	OMA 07
A10W408	131-0566-00	B100100	B110099	BUS,CONDUCTOR:DUMMY RES,0.094 OD X 0.225L (2246 MOD A,2Y)	24546	OMA 07
A10W408	131-0566-00	B700100	B710099	BUS,CONDUCTOR:DUMMY RES,0.094 OD X 0.225L (2246 1Y)	24546	OMA 07
A10W410	131-0566-00	B100100	B110099	BUS,CONDUCTOR:DUMMY RES,0.094 OD X 0.225L (2246 MOD A,2Y)	24546	OMA 07
A10W410	131-0566-00	B700100	B710099	BUS,CONDUCTOR:DUMMY RES,0.094 OD X 0.225L (2246 1Y)	24546	OMA 07
A10W411	131-0566-00	B100100	B110099	BUS,CONDUCTOR:DUMMY RES,0.094 OD X 0.225L (2246 MOD A,2Y)	24546	OMA 07
A10W411	131-0566-00	B700100	B710099	BUS,CONDUCTOR:DUMMY RES,0.094 OD X 0.225L (2246 1Y)	24546	OMA 07
A10W412	131-0566-00	B100100	B110099	BUS,CONDUCTOR:DUMMY RES,0.094 OD X 0.225L (2246 MOD A,2Y)	24546	OMA 07
A10W412	131-0566-00	B700100	B710099	BUS,CONDUCTOR:DUMMY RES,0.094 OD X 0.225L (2246 1Y)	24546	OMA 07
A10W413	131-0566-00			BUS,CONDUCTOR:DUMMY RES,0.094 OD X 0.225L	24546	OMA 07
A10W414	131-0566-00			BUS,CONDUCTOR:DUMMY RES,0.094 OD X 0.225L	24546	OMA 07
A10W415	174-0733-01			CA ASSY,SP,ELEC:4,26 AWG,4.5 L,RIBBON	0J7N9	ORDER BY DESC
A10W416	174-0732-01			CA ASSY,SP,ELEC:4,26 AWG,3.0 L,RIBBON	0J7N9	ORDER BY DESC
A10W501	131-0566-00	B110100		BUS,CONDUCTOR:DUMMY RES,0.094 OD X 0.225L (2246 MOD A,2Y)	24546	OMA 07
A10W501	131-0566-00	B710100		BUS,CONDUCTOR:DUMMY RES,0.094 OD X 0.225L (2246 1Y)	24546	OMA 07
A10W502	131-0566-00	B110100		BUS,CONDUCTOR:DUMMY RES,0.094 OD X 0.225L (2246 MOD A,2Y)	24546	OMA 07
A10W502	131-0566-00	B710100		BUS,CONDUCTOR:DUMMY RES,0.094 OD X 0.225L (2246 1Y)	24546	OMA 07
A10W503	131-0566-00	B110100		BUS,CONDUCTOR:DUMMY RES,0.094 OD X 0.225L (2246 MOD A,2Y)	24546	OMA 07
A10W503	131-0566-00	B710100		BUS,CONDUCTOR:DUMMY RES,0.094 OD X 0.225L (2246 1Y)	24546	OMA 07
A10W504	131-0566-00	B110100		BUS,CONDUCTOR:DUMMY RES,0.094 OD X 0.225L (2246 MOD A,2Y)	24546	OMA 07
A10W504	131-0566-00	B710100		BUS,CONDUCTOR:DUMMY RES,0.094 OD X 0.225L (2246 1Y)	24546	OMA 07

Component Number	Tektronix Part No.	Serial No. Effective	Dscont	Name & Description	Mfr. Code	Mfr. Part No.
A10W505	131-0566-00			BUS,CONDUCTOR:DUMMY RES,0.094 OD X 0.225L	24546	OMA 07
A10W506	131-0566-00	B110100		BUS,CONDUCTOR:DUMMY RES,0.094 OD X 0.225L (2246 MOD A,2Y)	24546	OMA 07
A10W506	131-0566-00	B710100		BUS,CONDUCTOR:DUMMY RES,0.094 OD X 0.225L (2246 1Y)	24546	OMA 07
A10W507	131-0566-00	B110100		BUS,CONDUCTOR:DUMMY RES,0.094 OD X 0.225L (2246 MOD A,2Y)	24546	OMA 07
A10W507	131-0566-00	B710100		BUS,CONDUCTOR:DUMMY RES,0.094 OD X 0.225L (2246 1Y)	24546	OMA 07
A10W510	131-0566-00			BUS,CONDUCTOR:DUMMY RES,0.094 OD X 0.225L	24546	OMA 07
A10W603	131-0566-00			BUS,CONDUCTOR:DUMMY RES,0.094 OD X 0.225L	24546	OMA 07
A10W604	131-0566-00			BUS,CONDUCTOR:DUMMY RES,0.094 OD X 0.225L	24546	OMA 07
A10W605	131-0566-00			BUS,CONDUCTOR:DUMMY RES,0.094 OD X 0.225L	24546	OMA 07
A10W606	131-0566-00	B110100		BUS,CONDUCTOR:DUMMY RES,0.094 OD X 0.225L (2246 MOD A,2Y)	24546	OMA 07
A10W606	131-0566-00	B710100		BUS,CONDUCTOR:DUMMY RES,0.094 OD X 0.225L (2246 1Y)	24546	OMA 07
A10W607	131-0566-00	B110100		BUS,CONDUCTOR:DUMMY RES,0.094 OD X 0.225L (2246 MOD A,2Y)	24546	OMA 07
A10W607	131-0566-00	B710100		BUS,CONDUCTOR:DUMMY RES,0.094 OD X 0.225L (2246 1Y)	24546	OMA 07
A10W610	131-0566-00			BUS,CONDUCTOR:DUMMY RES,0.094 OD X 0.225L	24546	OMA 07
A10W611	131-0566-00			BUS,CONDUCTOR:DUMMY RES,0.094 OD X 0.225L	24546	OMA 07
A10W612	131-0566-00	B100100	B119999	BUS,CONDUCTOR:DUMMY RES,0.094 OD X 0.225L (2246 MOD A,2Y)	24546	OMA 07
A10W612	131-0566-00	B700100	B714999	BUS,CONDUCTOR:DUMMY RES,0.094 OD X 0.225L (2246 1Y)	24546	OMA 07
A10W802	131-0566-00			BUS,CONDUCTOR:DUMMY RES,0.094 OD X 0.225L	24546	OMA 07
A10W805	131-0566-00			BUS,CONDUCTOR:DUMMY RES,0.094 OD X 0.225L	24546	OMA 07
A10W806	131-0566-00			BUS,CONDUCTOR:DUMMY RES,0.094 OD X 0.225L	24546	OMA 07
A10W807	131-0566-00			BUS,CONDUCTOR:DUMMY RES,0.094 OD X 0.225L	24546	OMA 07
A10W808	131-0566-00			BUS,CONDUCTOR:DUMMY RES,0.094 OD X 0.225L	24546	OMA 07
A10W810	131-0566-00			BUS,CONDUCTOR:DUMMY RES,0.094 OD X 0.225L	24546	OMA 07
A10W811	131-0566-00			BUS,CONDUCTOR:DUMMY RES,0.094 OD X 0.225L	24546	OMA 07
A10W815	131-0566-00			BUS,CONDUCTOR:DUMMY RES,0.094 OD X 0.225L	24546	OMA 07
A10W820	131-0566-00	B110100	B119999	BUS,CONDUCTOR:DUMMY RES,0.094 OD X 0.225L (2246 MOD A,2Y)	24546	OMA 07
A10W820	131-0566-00	B710100	B714999	BUS,CONDUCTOR:DUMMY RES,0.094 OD X 0.225L (2246 1Y)	24546	OMA 07
A10W821	131-0566-00	B110100	B119999	BUS,CONDUCTOR:DUMMY RES,0.094 OD X 0.225L (2246 MOD A,2Y)	24546	OMA 07
A10W821	131-0566-00	B710100	B714999	BUS,CONDUCTOR:DUMMY RES,0.094 OD X 0.225L (2246 1Y)	24546	OMA 07
A10W1000	131-0566-00			BUS,CONDUCTOR:DUMMY RES,0.094 OD X 0.225L	24546	OMA 07
A10W1010	131-0566-00	B100100	B110099	BUS,CONDUCTOR:DUMMY RES,0.094 OD X 0.225L (2246 MOD A,2Y)	24546	OMA 07
A10W1010	131-0566-00	B700100	B710099	BUS,CONDUCTOR:DUMMY RES,0.094 OD X 0.225L (2246 1Y)	24546	OMA 07
A10W1101	131-0566-00			BUS,CONDUCTOR:DUMMY RES,0.094 OD X 0.225L	24546	OMA 07
A10W1102	131-0566-00			BUS,CONDUCTOR:DUMMY RES,0.094 OD X 0.225L	24546	OMA 07
A10W1103	131-0566-00			BUS,CONDUCTOR:DUMMY RES,0.094 OD X 0.225L	24546	OMA 07

Component Number	Tektronix Part No.	Serial No. Effective	Dscont	Name & Description	Mfr. Code	Mfr. Part No.
A10W1104	131-0566-00	B710630		BUS,CONDUCTOR:DUMMY RES,0.094 OD X 0.225L (2246 1Y)	24546	OMA 07
A10W1104	131-0566-00	B111186		BUS,CONDUCTOR:DUMMY RES,0.094 OD X 0.225L (2246 MOD A,2Y)	24546	OMA 07
A10W1105	131-0566-00	B710630		BUS,CONDUCTOR:DUMMY RES,0.094 OD X 0.225L (2246 1Y)	24546	OMA 07
A10W1105	131-0566-00	B111186		BUS,CONDUCTOR:DUMMY RES,0.094 OD X 0.225L (2246 MOD A,2Y)	24546	OMA 07
A10W1106	131-0566-00			BUS,CONDUCTOR:DUMMY RES,0.094 OD X 0.225L	24546	OMA 07
A10W1107	131-0566-00	B100100	B110099	BUS,CONDUCTOR:DUMMY RES,0.094 OD X 0.225L (2246 MOD A,2Y)	24546	OMA 07
A10W1107	131-0566-00	B700100	B710099	BUS,CONDUCTOR:DUMMY RES,0.094 OD X 0.225L (2246 1Y)	24546	OMA 07
A10W1108	131-0566-00	B110100		BUS,CONDUCTOR:DUMMY RES,0.094 OD X 0.225L (2246 MOD A,2Y)	24546	OMA 07
A10W1108	131-0566-00	B710100		BUS,CONDUCTOR:DUMMY RES,0.094 OD X 0.225L (2246 1Y)	24546	OMA 07
A10W1120	131-0566-00	B100100	B110099	BUS,CONDUCTOR:DUMMY RES,0.094 OD X 0.225L (2246 MOD A,2Y)	24546	OMA 07
A10W1120	131-0566-00	B700100	B710099	BUS,CONDUCTOR:DUMMY RES,0.094 OD X 0.225L (2246 1Y)	24546	OMA 07
A10W1200	131-0566-00			BUS,CONDUCTOR:DUMMY RES,0.094 OD X 0.225L	24546	OMA 07
A10W1201	131-0566-00			BUS,CONDUCTOR:DUMMY RES,0.094 OD X 0.225L	24546	OMA 07
A10W1202	131-0566-00			BUS,CONDUCTOR:DUMMY RES,0.094 OD X 0.225L	24546	OMA 07
A10W1203	131-0566-00	B110100		BUS,CONDUCTOR:DUMMY RES,0.094 OD X 0.225L (2246 MOD A,2Y)	24546	OMA 07
A10W1203	131-0566-00	B710100		BUS,CONDUCTOR:DUMMY RES,0.094 OD X 0.225L (2246 1Y)	24546	OMA 07
A10W1204	131-0566-00			BUS,CONDUCTOR:DUMMY RES,0.094 OD X 0.225L	24546	OMA 07
A10W1205	131-0566-00			BUS,CONDUCTOR:DUMMY RES,0.094 OD X 0.225L	24546	OMA 07
A10W1209	131-0566-00			BUS,CONDUCTOR:DUMMY RES,0.094 OD X 0.225L	24546	OMA 07
A10W1210	131-0566-00			BUS,CONDUCTOR:DUMMY RES,0.094 OD X 0.225L	24546	OMA 07
A10W1216	131-0566-00			BUS,CONDUCTOR:DUMMY RES,0.094 OD X 0.225L	24546	OMA 07
A10W1217	131-0566-00			BUS,CONDUCTOR:DUMMY RES,0.094 OD X 0.225L	24546	OMA 07
A10W1218	131-0566-00			BUS,CONDUCTOR:DUMMY RES,0.094 OD X 0.225L	24546	OMA 07
A10W1221	131-0566-00			BUS,CONDUCTOR:DUMMY RES,0.094 OD X 0.225L	24546	OMA 07
A10W1222	131-0566-00			BUS,CONDUCTOR:DUMMY RES,0.094 OD X 0.225L	24546	OMA 07
A10W1223	131-0566-00			BUS,CONDUCTOR:DUMMY RES,0.094 OD X 0.225L	24546	OMA 07
A10W1231	131-0566-00			BUS,CONDUCTOR:DUMMY RES,0.094 OD X 0.225L	24546	OMA 07
A10W1237	131-0566-00			BUS,CONDUCTOR:DUMMY RES,0.094 OD X 0.225L	24546	OMA 07
A10W1247	131-0566-00			BUS,CONDUCTOR:DUMMY RES,0.094 OD X 0.225L	24546	OMA 07
A10W1248	131-0566-00			BUS,CONDUCTOR:DUMMY RES,0.094 OD X 0.225L	24546	OMA 07
A10W1249	131-0566-00			BUS,CONDUCTOR:DUMMY RES,0.094 OD X 0.225L	24546	OMA 07
A10W1250	131-0566-00			BUS,CONDUCTOR:DUMMY RES,0.094 OD X 0.225L	24546	OMA 07
A10W1251	131-0566-00			BUS,CONDUCTOR:DUMMY RES,0.094 OD X 0.225L	24546	OMA 07
A10W1252	131-0566-00			BUS,CONDUCTOR:DUMMY RES,0.094 OD X 0.225L	24546	OMA 07
A10W1255	131-0566-00			BUS,CONDUCTOR:DUMMY RES,0.094 OD X 0.225L	24546	OMA 07

Component Number	Tektronix Part No.	Serial No. Effective	Dscont	Name & Description	Mfr. Code	Mfr. Part No.
A10W1277	131-0566-00			BUS,CONDUCTOR:DUMMY RES,0.094 OD X 0.225L	24546	OMA 07
A10W1288	131-0566-00			BUS,CONDUCTOR:DUMMY RES,0.094 OD X 0.225L	24546	OMA 07
A10W2302	174-1041-00			CA ASSY,SP,ELEC:18 COND,8.5 L,RIBBON	00779	487755-2
A10W2304	174-1039-00			CA ASSY,SP,ELEC:12 COND,11.3 L,RIBBON	00779	487755-3
A10W2502	175-9903-00			CA ASSY,SP,ELEC:25,27 AWG,6.0 L	00779	ORDER BY DESC
A10W2701	131-0566-00			BUS,CONDUCTOR:DUMMY RES,0.094 OD X 0.225L	24546	OMA 07
A10X421	136-1005-00	B100100	B112868	SKT,PL-IN ELEK:PLCC,PCB,28 POS,0.05 CTR, 0.360 H X 0.125 TAIL,TIN,0.55-0.75 IC SHOULDER; TUBE/18 EA, (2246 MOD A,2Y)	00779	3-821581-1
A10X421	136-1065-00	B112869		SKT,PL-IN ELEK:MICROCKT,28 PIN,LOW PROFILE (2246 MOD A,2Y)	00779	641746-2
A10X421	136-1005-00	B700100	B710999	SKT,PL-IN ELEK:PLCC,PCB,28 POS,0.05 CTR, 0.360 H X 0.125 TAIL,TIN,0.55-0.75 IC SHOULDER; TUBE/18 EA, (2246 1Y)	00779	3-821581-1
A10X421	136-1065-00	B711000		SKT,PL-IN ELEK:MICROCKT,28 PIN,LOW PROFILE (2246 1Y)	00779	641746-2
A10X431	136-1005-00	B100100	B112868	SKT,PL-IN ELEK:PLCC,PCB,28 POS,0.05 CTR, 0.360 H X 0.125 TAIL,TIN,0.55-0.75 IC SHOULDER; TUBE/18 EA, (2246 MOD A,2Y)	00779	3-821581-1
A10X431	136-1065-00	B112869		SKT,PL-IN ELEK:MICROCKT,28 PIN,LOW PROFILE (2246 MOD A)	00779	641746-2
A10X431	136-1005-00	B700100	B710999	SKT,PL-IN ELEK:PLCC,PCB,28 POS,0.05 CTR, 0.360 H X 0.125 TAIL,TIN,0.55-0.75 IC SHOULDER; TUBE/18 EA, (2246 1Y)	00779	3-821581-1
A10X431	136-1065-00	B711000		SKT,PL-IN ELEK:MICROCKT,28 PIN,LOW PROFILE (2246 1Y)	00779	641746-2
A10Y600	119-2051-00			RESONATOR,CER:10MHZ	51406	CSA 10:00 MX11

Component Number	Tektronix Part No.	Serial No. Effective	Dscont	Name & Description	Mfr. Code	Mfr. Part No.
A12	670-9402-01			CIRCUIT BD ASSY:POTENTIOMETER	80009	670940201
A12J2105	131-3626-00			CONN,BOX::PCB,SIP;FEMALE,STR,1 X 17,0.1 CTR,0.21 H X 0.120 TAIL,TIN,BECU,BD RETENTION	00779	2-643649-3
A12R2101	311-2343-00			RES,VAR,NONWW:CKT BD,5K OHM,20%,0.5W LINEAR	32997	91Z1AZ45EA0119
A12R2102	311-2345-00			RES,VAR,NONWW:CKT BD 5K OHM,20%,0.5W LINEAR	32997	91Z1AZ45EAO117
A12R2103	311-2343-00			RES,VAR,NONWW:CKT BD,5K OHM,20%,0.5W LINEAR	32997	91Z1AZ45EA0119
A12R2104	311-2345-00			RES,VAR,NONWW:CKT BD 5K OHM,20%,0.5W LINEAR	32997	91Z1AZ45EAO117
A12R2105	311-2345-00			RES,VAR,NONWW:CKT BD 5K OHM,20%,0.5W LINEAR	32997	91Z1AZ45EAO117
A12R2106	311-2345-00			RES,VAR,NONWW:CKT BD 5K OHM,20%,0.5W LINEAR	32997	91Z1AZ45EAO117
A12R2107	311-2343-00			RES,VAR,NONWW:CKT BD,5K OHM,20%,0.5W LINEAR	32997	91Z1AZ45EA0119
A12R2108	311-2345-00			RES,VAR,NONWW:CKT BD 5K OHM,20%,0.5W LINEAR	32997	91Z1AZ45EAO117
A12R2109	311-2345-00			RES,VAR,NONWW:CKT BD 5K OHM,20%,0.5W LINEAR	32997	91Z1AZ45EAO117
A12R2110	311-2345-00			RES,VAR,NONWW:CKT BD 5K OHM,20%,0.5W LINEAR	32997	91Z1AZ45EAO117
A12R2111	311-2181-00			RES,VAR,NONWW:LINEAR,5K OHM,30%,0.25W	32997	91Z2D-Z45-EA002
A12R2112	311-2345-00			RES,VAR,NONWW:CKT BD 5K OHM,20%,0.5W LINEAR	32997	91Z1AZ45EAO117
A12R2113	311-2181-00			RES,VAR,NONWW:LINEAR,5K OHM,30%,0.25W	32997	91Z2D-Z45-EA002

Component Number	Tektronix Part No.	Serial No. Effective	Dscont	Name & Description	Mfr. Code	Mfr. Part No.
A14	670-9399-01			CIRCUIT BD ASSY:SWITCH	80009	670939901
A14CR2001	152-0141-02			DIODE,SIG:,ULTRA FAST;40V,150MA,4NS,2PF	27014	FDH9427
A14CR2002	152-0141-02			DIODE,SIG:,ULTRA FAST;40V,150MA,4NS,2PF	27014	FDH9427
A14CR2003	152-0141-02			DIODE,SIG:,ULTRA FAST;40V,150MA,4NS,2PF	27014	FDH9427
A14CR2004	152-0141-02			DIODE,SIG:,ULTRA FAST;40V,150MA,4NS,2PF	27014	FDH9427
A14CR2005	152-0141-02			DIODE,SIG:,ULTRA FAST;40V,150MA,4NS,2PF	27014	FDH9427
A14CR2006	152-0141-02			DIODE,SIG:,ULTRA FAST;40V,150MA,4NS,2PF	27014	FDH9427
A14DS2001	150-1160-00			LT EMITTING DIO:GREEN	50434	QLMP 1587
A14DS2002	150-1160-00			LT EMITTING DIO:GREEN	50434	QLMP 1587
A14DS2003	150-1160-00			LT EMITTING DIO:GREEN	50434	QLMP 1587
A14DS2004	150-1160-00			LT EMITTING DIO:GREEN	50434	QLMP 1587
A14DS2005	150-1160-00			LT EMITTING DIO:GREEN	50434	QLMP 1587
A14DS2006	150-1160-00			LT EMITTING DIO:GREEN	50434	QLMP 1587
A14DS2007	150-1160-00			LT EMITTING DIO:GREEN	50434	QLMP 1587
A14DS2008	150-1160-00			LT EMITTING DIO:GREEN	50434	QLMP 1587
A14DS2009	150-1160-00			LT EMITTING DIO:GREEN	50434	QLMP 1587
A14DS2010	150-1160-00			LT EMITTING DIO:GREEN	50434	QLMP 1587
A14DS2011	150-1160-00			LT EMITTING DIO:GREEN	50434	QLMP 1587
A14DS2012	150-1161-00			LT EMITTING DIO:YELLOW	50434	QLMP-1487
A14DS2013	150-1160-00			LT EMITTING DIO:GREEN	50434	QLMP 1587
A14DS2014	150-1160-00			LT EMITTING DIO:GREEN	50434	QLMP 1587
A14DS2015	150-1160-00			LT EMITTING DIO:GREEN	50434	QLMP 1587
A14DS2020	150-1160-00			LT EMITTING DIO:GREEN	50434	QLMP 1587
A14DS2021	150-1160-00			LT EMITTING DIO:GREEN	50434	QLMP 1587
A14DS2022	150-1161-00			LT EMITTING DIO:YELLOW	50434	QLMP-1487
A14DS2023	150-1161-00			LT EMITTING DIO:YELLOW	50434	QLMP-1487
A14DS2025	150-1160-00			LT EMITTING DIO:GREEN	50434	QLMP 1587
A14DS2026	150-1160-00			LT EMITTING DIO:GREEN	50434	QLMP 1587
A14DS2027	150-1160-00			LT EMITTING DIO:GREEN	50434	QLMP 1587
A14DS2028	150-1160-00			LT EMITTING DIO:GREEN	50434	QLMP 1587
A14DS2029	150-1160-00			LT EMITTING DIO:GREEN	50434	QLMP 1587
A14DS2030	150-1160-00			LT EMITTING DIO:GREEN	50434	QLMP 1587
A14DS2031	150-1160-00			LT EMITTING DIO:GREEN	50434	QLMP 1587
A14DS2032	150-1160-00			LT EMITTING DIO:GREEN	50434	QLMP 1587
A14DS2033	150-1160-00			LT EMITTING DIO:GREEN	50434	QLMP 1587
A14DS2034	150-1161-00			LT EMITTING DIO:YELLOW	50434	QLMP-1487
A14DS2035	150-1160-00			LT EMITTING DIO:GREEN	50434	QLMP 1587
A14DS2036	150-1160-00			LT EMITTING DIO:GREEN	50434	QLMP 1587
A14DS2037	150-1160-00			LT EMITTING DIO:GREEN	50434	QLMP 1587
A14DS2038	150-1160-00			LT EMITTING DIO:GREEN	50434	QLMP 1587
A14DS2039	150-1161-00			LT EMITTING DIO:YELLOW	50434	QLMP-1487
A14DS2041	150-1160-00			LT EMITTING DIO:GREEN	50434	QLMP 1587
A14DS2042	150-1160-00			LT EMITTING DIO:GREEN	50434	QLMP 1587
A14DS2043	150-1161-00			LT EMITTING DIO:YELLOW	50434	QLMP-1487
A14DS2044	150-1161-00			LT EMITTING DIO:YELLOW	50434	QLMP-1487

Component Number	Tektronix Part No.	Serial No. Effective	Dscont	Name & Description	Mfr. Code	Mfr. Part No.
A14DS2045	150-1161-00			LT EMITTING DIO:YELLOW	50434	QLMP-1487
A14DS2046	150-1161-00			LT EMITTING DIO:YELLOW	50434	QLMP-1487
A14DS2047	150-1160-00			LT EMITTING DIO:GREEN	50434	QLMP 1587
A14DS2048	150-1160-00			LT EMITTING DIO:GREEN	50434	QLMP 1587
A14R2001	307-0675-00			RES NTWK,FXD,FI:(9),1K OHM,2%,1.25W	91637	CSC10A01-102G
A14R2002	307-0675-00			RES NTWK,FXD,FI:(9),1K OHM,2%,1.25W	91637	CSC10A01-102G
A14U2001	156-0789-00			IC,DIGITAL:LSTTL,SHIFT REGISTER;8-BIT PISO	01295	SN74LS165N
A14U2002	156-0789-00			IC,DIGITAL:LSTTL,SHIFT REGISTER;8-BIT PISO	01295	SN74LS165N
A14W2501	175-9902-00			CA ASSY,SP,ELEC:20,27 AWG,8.05 L	0J7N9	PER TEK DRAWING

Component Number	Tektronix Part No.	Serial No. Effective	Serial No. Dscont	Name & Description	Mfr. Code	Mfr. Part No.
A16	672-1306-00	B700100	B711092	CIRCUIT BD ASSY:PROCESSOR (2246 1Y) (WITH U2519 FIRMWARE)	80009	672130600
A16	672-1306-01	B711093		CIRCUIT BD ASSY:PROCESSOR,671-1086-XX WIRED (2246 1Y) (WITH U2519 FIRMWARE)	80009	672130601
A16	672-0254-00	B100100	B113797	CIRCUIT BD ASSY: PROCESSOR (2246 MOD A,2Y) (WITH U2519 FIRMWARE)	80009	672025400
A16	672-0254-01	B113798		CIRCUIT BD ASSY:PROCESSOR,671-1239-XX WIRED (2246 MOD A,2Y) (WITH U2519 FIRMWARE)	80009	672025401
A16U2519	160-5063-07	B100100	B101548	MICROCKT,DGTL:NMOS,131072 X 8 EPROM,PRGM 27010,DIP32.6 (2246 MOD A,2Y)	TK2172	160-5063-07
A16U2519	160-5063-08	B101549	B101769	MICROCKT,DGTL:NMOS,131072 X 8 EPROM,PRGM 27010,DIP32.6 (2246 MOD A,2Y)	TK2172	160-5063-08
A16U2519	160-5063-09	B101770	B110314	MICROCKT,DGTL:NMOS,131072 X 8 EPROM,PRGM (2246 MOD A,2Y)	TK0161	160-5063-09
A16U2519	160-5063-10	B110315	B113200	MICROCKT,DGTL:NMOS,131072 X 8 EPROM,PRGM 21010,DIP32.6 (2246 MOD A,2Y)	TK0161	160-5063-10
A16U2519	160-5063-11	B113201		MICROCKT,DGTL:NMOS,131072 X 8 EPROM,PEGM 21010,DIP32.6 (2246 MOD A,2Y)	TK0161	93369300
A16U2519	160-5063-08	B700100	B700632	MICROCKT,DGTL:NMOS,131072 X 8 EPROM,PRGM 27010,DIP32.6 (2246 1Y)	TK2172	160-5063-08
A16U2519	160-5063-09	B700633	B710184	MICROCKT,DGTL:NMOS,131072 X 8 EPROM,PRGM (2246 1Y)	TK0161	160-5063-09
A16U2519	160-5063-10	B710185	B711085	MICROCKT,DGTL:NMOS,131072 X 8 EPROM,PRGM 21010,DIP32.6 (2246 1Y)	TK0161	160-5063-10
A16U2519	160-5063-11	B711086		MICROCKT,DGTL:NMOS,131072 X 8 EPROM,PEGM 21010,DIP32.6 (2246 1Y)	TK0161	93369300
A16A1	671-1086-00	B700100	B711092	CIRCUIT BD ASSY:PROCESSOR (2246 1Y) (WITHOUT U2519 FIRMWARE)	80009	671108600
A16A1	671-1086-01	B711093		CIRCUIT BD ASSY:A16 PROCESSOR (2246 1Y) (WITHOUT U2519 FIRMWARE)	80009	671108601
A16A1	671-0947-00	B100100	B101981	CIRCUIT BD ASSY:PROCESSOR (2246 MOD A,2Y) (WITHOUT U2519 FIRMWARE)	80009	671094700
A16A1	671-1239-00	B101982	B113797	CIRCUIT BD ASSY:PROCESSOR (2246 MOD A,2Y) (WITHOUT U2519 FIRMWARE)	80009	671123900
A16A1	671-1239-01	B113798		CIRCUIT BD ASSY:A16 PROCESSOR (2246 MOD A,2Y) (WITHOUT U2519 FIRMWARE)	80009	671123901
A16A1BT2501	146-0055-00			BATTERY,DRY:3.0V,1200 MAH,LITHIUM, (2246 MOD A,2Y)	61058	BR-2/3A-E2P
A16A1BT2501	146-0067-00	B700100	B715000	BATTERY,DRY:SILVER OXIDE,MODEL #391 (2246 1Y)	TK2190	V391
A16A1BT2501	146-0086-00	B715001		BATTERY,DRY:3.0V,LITHIUM (2246 1Y)	0DWW6	BR2/3AA

Component Number	Tektronix Part No.	Serial No. Effective	Dscont	Name & Description	Mfr. Code	Mfr. Part No.
A16A1BT2502	146-0067-00	B700100	B715000	BATTERY,DRY:SILVER OXIDE,MODEL #391 (2246 1Y)	TK2190	V391
A16A1C2300	281-0759-00			CAP,FXD,CER DI:22PF,10%,100V	04222	SA101A220KAA
A16A1C2301	285-1300-01			CAP,FXD,MTLZD:0.1UF,10%,63V	TK1913	MKS2 0.1/63/10
A16A1C2302	285-1300-01			CAP,FXD,MTLZD:0.1UF,10%,63V	TK1913	MKS2 0.1/63/10
A16A1C2303	285-1300-01			CAP,FXD,MTLZD:0.1UF,10%,63V	TK1913	MKS2 0.1/63/10
A16A1C2304	281-0909-00			CAP,FXD,CER DI:0.022UF,20%,50V	04222	SA105C223MAA
A16A1C2305	285-1300-01			CAP,FXD,MTLZD:0.1UF,10%,63V	TK1913	MKS2 0.1/63/10
A16A1C2306	285-1300-01			CAP,FXD,MTLZD:0.1UF,10%,63V	TK1913	MKS2 0.1/63/10
A16A1C2307	285-1301-01			CAP,FXD,MTLZD:0.47UF,10%,50V	TK1913	MKS 2 .47/50 OR
A16A1C2308	285-1348-00			CAP,FXD,MTLZD:0.22UF,10%,63V	TK1913	MKS2 0.22 MFD 1
A16A1C2309	285-1301-01			CAP,FXD,MTLZD:0.47UF,10%,50V	TK1913	MKS 2 .47/50 OR
A16A1C2310	285-1348-00			CAP,FXD,MTLZD:0.22UF,10%,63V	TK1913	MKS2 0.22 MFD 1
A16A1C2311	281-0909-00			CAP,FXD,CER DI:0.022UF,20%,50V	04222	SA105C223MAA
A16A1C2312	281-0909-00			CAP,FXD,CER DI:0.022UF,20%,50V	04222	SA105C223MAA
A16A1C2313	281-0909-00			CAP,FXD,CER DI:0.022UF,20%,50V	04222	SA105C223MAA
A16A1C2314	281-0775-01			CAP,FXD,CER DI:0.1UF,20%,50V	04222	SA105E104MAA
A16A1C2315	281-0775-01			CAP,FXD,CER DI:0.1UF,20%,50V	04222	SA105E104MAA
A16A1C2316	281-0909-00			CAP,FXD,CER DI:0.022UF,20%,50V	04222	SA105C223MAA
A16A1C2317	281-0909-00			CAP,FXD,CER DI:0.022UF,20%,50V	04222	SA105C223MAA
A16A1C2318	281-0809-00			CAP,FXD,CER DI:200 PF,5%,100V	04222	SA101A201JAA
A16A1C2319	281-0909-00			CAP,FXD,CER DI:0.022UF,20%,50V	04222	SA105C223MAA
A16A1C2320	281-0798-00	B700100	B710099	CAP,FXD,CER DI:51PF,1%,100V (2246 1Y)	TK1743	CGB510GEN
A16A1C2320	281-0763-00	B710100		CAP,FXD,CER DI:47PF,10%,100V (2246 1Y)	04222	SA102A470KAA
A16A1C2320	281-0798-00	B100100	B110099	CAP,FXD,CER DI:51PF,1%,100V (2246 MOD A,2Y)	TK1743	CGB510GEN
A16A1C2320	281-0763-00	B110100		CAP,FXD,CER DI:47PF,10%,100V (2246 MOD A,2Y)	04222	SA102A470KAA
A16A1C2321	281-0909-00			CAP,FXD,CER DI:0.022UF,20%,50V	04222	SA105C223MAA
A16A1C2322	281-0798-00	B700100	B710099	CAP,FXD,CER DI:51PF,1%,100V (2246 1Y)	TK1743	CGB510GEN
A16A1C2322	281-0763-00	B710100		CAP,FXD,CER DI:47PF,10%,100V (2246 1Y)	04222	SA102A470KAA
A16A1C2322	281-0798-00	B100100	B110099	CAP,FXD,CER DI:51PF,1%,100V (2246 MOD A,2Y)	TK1743	CGB510GEN
A16A1C2322	281-0763-00	B110100		CAP,FXD,CER DI:47PF,10%,100V (2246 MOD A,2Y)	04222	SA102A470KAA
A16A1C2323	281-0798-00	B700100	B710099	CAP,FXD,CER DI:51PF,1%,100V (2246 1Y)	TK1743	CGB510GEN
A16A1C2323	281-0763-00	B710100		CAP,FXD,CER DI:47PF,10%,100V (2246 1Y)	04222	SA102A470KAA
A16A1C2323	281-0798-00	B100100	B110099	CAP,FXD,CER DI:51PF,1%,100V (2246 MOD A,2Y)	TK1743	CGB510GEN
A16A1C2323	281-0763-00	B110100		CAP,FXD,CER DI:47PF,10%,100V (2246 MOD A,2Y)	04222	SA102A470KAA
A16A1C2324	285-1300-01			CAP,FXD,MTLZD:0.1UF,10%,63V	TK1913	MKS2 0.1/63/10

Component Number	Tektronix Part No.	Serial No. Effective	Dscont	Name & Description	Mfr. Code	Mfr. Part No.
A16A1C2401	281-0909-00			CAP,FXD,CER DI:0.022UF,20%,50V	04222	SA105C223MAA
A16A1C2402	281-0909-00			CAP,FXD,CER DI:0.022UF,20%,50V	04222	SA105C223MAA
A16A1C2403	281-0909-00			CAP,FXD,CER DI:0.022UF,20%,50V	04222	SA105C223MAA
A16A1C2404	281-0909-00			CAP,FXD,CER DI:0.022UF,20%,50V	04222	SA105C223MAA
A16A1C2405	281-0909-00			CAP,FXD,CER DI:0.022UF,20%,50V	04222	SA105C223MAA
A16A1C2406	281-0909-00			CAP,FXD,CER DI:0.022UF,20%,50V	04222	SA105C223MAA
A16A1C2407	281-0909-00			CAP,FXD,CER DI:0.022UF,20%,50V	04222	SA105C223MAA
A16A1C2408	281-0909-00			CAP,FXD,CER DI:0.022UF,20%,50V	04222	SA105C223MAA
A16A1C2409	281-0909-00			CAP,FXD,CER DI:0.022UF,20%,50V	04222	SA105C223MAA
A16A1C2410	281-0909-00			CAP,FXD,CER DI:0.022UF,20%,50V	04222	SA105C223MAA
A16A1C2411	281-0809-00			CAP,FXD,CER DI:200 PF,5%,100V	04222	SA101A201JAA
A16A1C2412	281-0809-00			CAP,FXD,CER DI:200 PF,5%,100V	04222	SA101A201JAA
A16A1C2415	281-0775-01			CAP,FXD,CER DI:0.1UF,20%,50V	04222	SA105E104MAA
A16A1C2416	281-0798-00	B700100	B710099	CAP,FXD,CER DI:51PF,1%,100V (2246 1Y)	TK1743	CGB510GEN
A16A1C2416	281-0763-00	B710100		CAP,FXD,CER DI:47PF,10%,100V (2246 1Y)	04222	SA102A470KAA
A16A1C2416	281-0798-00	B100100	B110099	CAP,FXD,CER DI:51PF,1%,100V (2246 MOD A,2Y)	TK1743	CGB510GEN
A16A1C2416	281-0763-00	B110100		CAP,FXD,CER DI:47PF,10%,100V (2246 MOD A,2Y)	04222	SA102A470KAA
A16A1C2417	281-0798-00	B700100	B710099	CAP,FXD,CER DI:51PF,1%,100V (2246 1Y)	TK1743	CGB510GEN
A16A1C2417	281-0763-00	B710100		CAP,FXD,CER DI:47PF,10%,100V (2246 1Y)	04222	SA102A470KAA
A16A1C2417	281-0798-00	B100100	B110099	CAP,FXD,CER DI:51PF,1%,100V (2246 MOD A,2Y)	TK1743	CGB510GEN
A16A1C2417	281-0763-00	B110100		CAP,FXD,CER DI:47PF,10%,100V (2246 MOD A,2Y)	04222	SA102A470KAA
A16A1C2418	281-0798-00	B700100	B710099	CAP,FXD,CER DI:51PF,1%,100V (2246 1Y)	TK1743	CGB510GEN
A16A1C2418	281-0763-00	B710100		CAP,FXD,CER DI:47PF,10%,100V (2246 1Y)	04222	SA102A470KAA
A16A1C2418	281-0798-00	B100100	B110099	CAP,FXD,CER DI:51PF,1%,100V (2246 MOD A,2Y)	TK1743	CGB510GEN
A16A1C2418	281-0763-00	B110100		CAP,FXD,CER DI:47PF,10%,100V (2246 MOD A,2Y)	04222	SA102A470KAA
A16A1C2419	281-0798-00	B700100	B710099	CAP,FXD,CER DI:51PF,1%,100V (2246 1Y)	TK1743	CGB510GEN
A16A1C2419	281-0763-00	B710100		CAP,FXD,CER DI:47PF,10%,100V (2246 1Y)	04222	SA102A470KAA
A16A1C2419	281-0798-00	B100100	B110099	CAP,FXD,CER DI:51PF,1%,100V (2246 MOD A,2Y)	TK1743	CGB510GEN
A16A1C2419	281-0763-00	B110100		CAP,FXD,CER DI:47PF,10%,100V (2246 MOD A,2Y)	04222	SA102A470KAA
A16A1C2420	281-0798-00	B700100	B710099	CAP,FXD,CER DI:51PF,1%,100V (2246 1Y)	TK1743	CGB510GEN

Component Number	Tektronix Part No.	Serial No. Effective	Dscont	Name & Description	Mfr. Code	Mfr. Part No.
A16A1C2420	281-0763-00	B710100		CAP,FXD,CER DI:47PF,10%,100V (2246 1Y)	04222	SA102A470KAA
A16A1C2420	281-0798-00	B100100	B110099	CAP,FXD,CER DI:51PF,1%,100V (2246 MOD A,2Y)	TK1743	CGB510GEN
A16A1C2420	281-0763-00	B110100		CAP,FXD,CER DI:47PF,10%,100V (2246 MOD A,2Y)	04222	SA102A470KAA
A16A1C2501	281-0909-00			CAP,FXD,CER DI:0.022UF,20%,50V	04222	SA105C223MAA
A16A1C2502	281-0909-00			CAP,FXD,CER DI:0.022UF,20%,50V	04222	SA105C223MAA
A16A1C2503	281-0909-00			CAP,FXD,CER DI:0.022UF,20%,50V	04222	SA105C223MAA
A16A1C2504	281-0909-00			CAP,FXD,CER DI:0.022UF,20%,50V	04222	SA105C223MAA
A16A1C2505	281-0909-00			CAP,FXD,CER DI:0.022UF,20%,50V	04222	SA105C223MAA
A16A1C2506	281-0909-00			CAP,FXD,CER DI:0.022UF,20%,50V	04222	SA105C223MAA
A16A1C2507	281-0909-00			CAP,FXD,CER DI:0.022UF,20%,50V	04222	SA105C223MAA
A16A1C2508	281-0909-00			CAP,FXD,CER DI:0.022UF,20%,50V	04222	SA105C223MAA
A16A1C2509	281-0909-00			CAP,FXD,CER DI:0.022UF,20%,50V	04222	SA105C223MAA
A16A1C2510	281-0909-00			CAP,FXD,CER DI:0.022UF,20%,50V	04222	SA105C223MAA
A16A1C2511	281-0909-00			CAP,FXD,CER DI:0.022UF,20%,50V	04222	SA105C223MAA
A16A1C2514	281-0759-00			CAP,FXD,CER DI:22PF,10%,100V	04222	SA101A220KAA
A16A1C2515	281-0759-00			CAP,FXD,CER DI:22PF,10%,100V	04222	SA101A220KAA
A16A1C2516	285-1301-01			CAP,FXD,MTLZD:0.47UF,10%,50V	TK1913	MKS 2 .47/50 OR
A16A1C2517	281-0775-01			CAP,FXD,CER DI:0.1UF,20%,50V	04222	SA105E104MAA
A16A1C2518	285-1301-01			CAP,FXD,MTLZD:0.47UF,10%,50V	TK1913	MKS 2 .47/50 OR
A16A1C2521	281-0772-00			CAP,FXD,CER DI:4700PF,10%,100V	04222	SA101C472KAA
A16A1C2522	281-0772-00			CAP,FXD,CER DI:4700PF,10%,100V	04222	SA101C472KAA
A16A1C2523	281-0772-00			CAP,FXD,CER DI:4700PF,10%,100V	04222	SA101C472KAA
A16A1C2524	281-0772-00			CAP,FXD,CER DI:4700PF,10%,100V	04222	SA101C472KAA
A16A1C2525	281-0772-00			CAP,FXD,CER DI:4700PF,10%,100V	04222	SA101C472KAA
A16A1C2526	281-0772-00			CAP,FXD,CER DI:4700PF,10%,100V	04222	SA101C472KAA
A16A1C2530	281-0909-00			CAP,FXD,CER DI:0.022UF,20%,50V	04222	SA105C223MAA
A16A1C2531	281-0909-00			CAP,FXD,CER DI:0.022UF,20%,50V	04222	SA105C223MAA
A16A1C2532	281-0909-00			CAP,FXD,CER DI:0.022UF,20%,50V	04222	SA105C223MAA
A16A1C2541	290-0748-00			CAP,FXD,ELCTLT:10UF,+50-20%,25WVDC	1W344	SME25T10RM5X12F
A16A1C2543	281-0772-00			CAP,FXD,CER DI:4700PF,10%,100V	04222	SA101C472KAA
A16A1C2544	281-0772-00			CAP,FXD,CER DI:4700PF,10%,100V	04222	SA101C472KAA
A16A1C2545	281-0772-00			CAP,FXD,CER DI:4700PF,10%,100V	04222	SA101C472KAA
A16A1C2546	281-0772-00			CAP,FXD,CER DI:4700PF,10%,100V	04222	SA101C472KAA
A16A1C2547	281-0772-00			CAP,FXD,CER DI:4700PF,10%,100V	04222	SA101C472KAA
A16A1C2548	281-0772-00			CAP,FXD,CER DI:4700PF,10%,100V	04222	SA101C472KAA
A16A1C2549	281-0772-00			CAP,FXD,CER DI:4700PF,10%,100V	04222	SA101C472KAA
A16A1C2550	281-0772-00			CAP,FXD,CER DI:4700PF,10%,100V	04222	SA101C472KAA
A16A1C2551	281-0798-00	B700100	B710099	CAP,FXD,CER DI:51PF,1%,100V (2246 1Y)	TK1743	CGB510GEN
A16A1C2551	281-0763-00	B710100		CAP,FXD,CER DI:47PF,10%,100V (2246 1Y)	04222	SA102A470KAA
A16A1C2551	281-0798-00	B100100	B110099	CAP,FXD,CER DI:51PF,1%,100V (2246 MOD A,2Y)	TK1743	CGB510GEN

Component Number	Tektronix Part No.	Serial No. Effective	Dscont	Name & Description	Mfr. Code	Mfr. Part No.
A16A1C2551	281-0763-00	B110100		CAP,FXD,CER DI:47PF,10%,100V (2246 MOD A,2Y)	04222	SA102A470KAA
A16A1C2552	281-0798-00	B700100	B710099	CAP,FXD,CER DI:51PF,1%,100V (2246 1Y)	TK1743	CGB510GEN
A16A1C2552	281-0763-00	B710100		CAP,FXD,CER DI:47PF,10%,100V (2246 1Y)	04222	SA102A470KAA
A16A1C2552	281-0798-00	B100100	B110099	CAP,FXD,CER DI:51PF,1%,100V (2246 MOD A,2Y)	TK1743	CGB510GEN
A16A1C2552	281-0763-00	B110100		CAP,FXD,CER DI:47PF,10%,100V (2246 MOD A,2Y)	04222	SA102A470KAA
A16A1C2553	281-0798-00	B700100	B710099	CAP,FXD,CER DI:51PF,1%,100V (2246 1Y)	TK1743	CGB510GEN
A16A1C2553	281-0763-00	B710100		CAP,FXD,CER DI:47PF,10%,100V (2246 1Y)	04222	SA102A470KAA
A16A1C2553	281-0798-00	B100100	B110099	CAP,FXD,CER DI:51PF,1%,100V (2246 MOD A,2Y)	TK1743	CGB510GEN
A16A1C2553	281-0763-00	B110100		CAP,FXD,CER DI:47PF,10%,100V (2246 MOD A,2Y)	04222	SA102A470KAA
A16A1C2554	281-0798-00	B700100	B710099	CAP,FXD,CER DI:51PF,1%,100V (2246 1Y)	TK1743	CGB510GEN
A16A1C2554	281-0763-00	B710100		CAP,FXD,CER DI:47PF,10%,100V (2246 1Y)	04222	SA102A470KAA
A16A1C2554	281-0798-00	B100100	B110099	CAP,FXD,CER DI:51PF,1%,100V (2246 MOD A,2Y)	TK1743	CGB510GEN
A16A1C2554	281-0763-00	B110100		CAP,FXD,CER DI:47PF,10%,100V (2246 MOD A,2Y)	04222	SA102A470KAA
A16A1C2555	281-0798-00	B700100	B710099	CAP,FXD,CER DI:51PF,1%,100V (2246 1Y)	TK1743	CGB510GEN
A16A1C2555	281-0763-00	B710100		CAP,FXD,CER DI:47PF,10%,100V (2246 1Y)	04222	SA102A470KAA
A16A1C2555	281-0798-00	B100100	B110099	CAP,FXD,CER DI:51PF,1%,100V (2246 MOD A,2Y)	TK1743	CGB510GEN
A16A1C2555	281-0763-00	B110100		CAP,FXD,CER DI:47PF,10%,100V (2246 MOD A,2Y)	04222	SA102A470KAA
A16A1CR2501	152-0141-02			DIODE,SIG:,ULTRA FAST;40V,150MA,4NS,2PF	27014	FDH9427
A16A1CR2502	152-0951-00			DIODE,SIG:SCHTKY,;60V,2.25PF	50088	1N6263
A16A1CR2504	152-0141-02			DIODE,SIG:,ULTRA FAST;40V,150MA,4NS,2PF	27014	FDH9427
A16A1CR2505	152-0951-00			DIODE,SIG:SCHTKY,;60V,2.25PF	50088	1N6263
A16A1DS2501	150-1161-00			LT EMITTING DIO:YELLOW	50434	QLMP-1487
A16A1J2302	136-0949-00			SOCKET,SIP::PCB,;STR,1 X 18,0.1 CTR,0.210 H	00779	2-643650-3
A16A1J2304	136-0948-00			SOCKET,SIP::PCB,;STR,1 X 12,0.1 CTR,0.210 H	00779	2-643644-3
A16A1J2501	131-3624-00			CONN,BOX::PCB,SIP;FEMALE,STR,1 X 20,0.1 CTR, 0.210 H X 0.12 TAIL,TIN,BECU,BD RETENTION	00779	2-643652-3
A16A1J2502	131-3623-00			CONN,BOX::PCB,SIP;FEMALE,STR,1 X 25,0.1 CTR, 0.21 H X 0.120 TAIL,TIN,BECU,BD RETENTION	00779	2-643657-3
A16A1J2503	131-4529-00			CONN,HDR::PCB,;MALE,STR,2 X 5,0.1 CTR,0.365	53387	3654-6002
A16A1J2601	131-3623-00			CONN,BOX::PCB,SIP;FEMALE,STR,1 X 25,0.1 CTR, 0.21 H X 0.120 TAIL,TIN,BECU,BD RETENTION	00779	2-643657-3
A16A1Q2501	151-0716-01			TRANSISTOR:NPN,SI,PWR DARLINGTON,1W,TO-92 PLUS	04713	MPS6725RLRP
A16A1Q2502	151-0716-01			TRANSISTOR:NPN,SI,PWR DARLINGTON,1W,TO-92 PLUS	04713	MPS6725RLRP

Component Number	Tektronix Part No.	Serial No. Effective	Dscont	Name & Description	Mfr. Code	Mfr. Part No.
A16A1Q2503	151-0716-01			TRANSISTOR:NPN,SI,PWR DARLINGTON,1W,TO-92 PLUS	04713	MPS6725RLRP
A16A1Q2504	151-0716-01			TRANSISTOR:NPN,SI,PWR DARLINGTON,1W,TO-92 PLUS	04713	MPS6725RLRP
A16A1Q2505	151-0716-01			TRANSISTOR:NPN,SI,PWR DARLINGTON,1W,TO-92 PLUS	04713	MPS6725RLRP
A16A1Q2506	151-0716-01			TRANSISTOR:NPN,SI,PWR DARLINGTON,1W,TO-92 PLUS	04713	MPS6725RLRP
A16A1Q2507	151-0190-00			TRANSISTOR,SIG:BIPOLAR,NPN;40V,200MA, 300MHZ,AMPLIFIER	04713	2N3904
A16A1R2301	322-3260-00			RES,FXD,FILM:4.99K OHM,1%,0.2W,TC=T0	91637	CCF501G49900F
A16A1R2302	313-1472-00			RES,FXD,FILM:4.7K OHM,5%,0.2W	91637	CCF50-2-47000J
A16A1R2303	322-3231-00			RES,FXD,FILM:2.49K OHM,1%,0.2W,TC=T0MI	91637	CCF50-1G24900F
A16A1R2304	313-1203-00			RES,FXD,FILM:20K OHM,5%,0.2W	91637	CCF50-2-20001J
A16A1R2305	313-1203-00			RES,FXD,FILM:20K OHM,5%,0.2W	91637	CCF50-2-20001J
A16A1R2306	313-1472-00			RES,FXD,FILM:4.7K OHM,5%,0.2W	91637	CCF50-2-47000J
A16A1R2307	313-1472-00			RES,FXD,FILM:4.7K OHM,5%,0.2W	91637	CCF50-2-47000J
A16A1R2308	313-1621-00			RES,FXD,FILM:620 OHM,5%,0.2W	91637	CCF50-2-620ROJ
A16A1R2309	313-1101-00			RES,FXD,FILM:100 OHM,5%,0.2W	91637	CCF50-2-100R0J
A16A1R2310	313-1472-00			RES,FXD,FILM:4.7K OHM,5%,0.2W	91637	CCF50-2-47000J
A16A1R2311	322-3231-00			RES,FXD,FILM:2.49K OHM,1%,0.2W,TC=T0MI	91637	CCF50-1G24900F
A16A1R2312	322-3252-00			RES,FXD,FILM:4.12K OHM,1%,0.2W,TC=T0	91637	CCF501G41200F
A16A1R2313	322-3252-00			RES,FXD,FILM:4.12K OHM,1%,0.2W,TC=T0	91637	CCF501G41200F
A16A1R2314	322-3231-00			RES,FXD,FILM:2.49K OHM,1%,0.2W, TC=T0MI	91637	CCF50-1G24900F
A16A1R2315	322-3238-00			RES,FXD,FILM:2.94K OHM,1%,0.2W,TC=T0	91637	CCF501G29400F
A16A1R2316	322-3231-00			RES,FXD,FILM:2.49K OHM,1%,0.2W,TC=T0MI	91637	CCF50-1G24900F
A16A1R2317	322-3231-00			RES,FXD,FILM:2.49K OHM,1%,0.2W,TC=T0MI	91637	CCF50-1G24900F
A16A1R2318	322-3238-00			RES,FXD,FILM:2.94K OHM,1%,0.2W,TC=T0	91637	CCF501G29400F
A16A1R2319	313-1472-00			RES,FXD,FILM:4.7K OHM,5%,0.2W	91637	CCF50-2-47000J
A16A1R2320	313-1472-00			RES,FXD,FILM:4.7K OHM,5%,0.2W	91637	CCF50-2-47000J
A16A1R2321	313-1472-00			RES,FXD,FILM:4.7K OHM,5%,0.2W	91637	CCF50-2-47000J
A16A1R2322	313-1472-00			RES,FXD,FILM:4.7K OHM,5%,0.2W	91637	CCF50-2-47000J
A16A1R2324	313-1472-00			RES,FXD,FILM:4.7K OHM,5%,0.2W	91637	CCF50-2-47000J
A16A1R2325	307-0499-00			RES,FXD,FILM:9,100K OHM,5%,0.125WTC=200 PPM/DEG C	11236	750-101-R100K O
A16A1R2328	313-1472-00			RES,FXD,FILM:4.7K OHM,5%,0.2W	91637	CCF50-2-47000J
A16A1R2329	313-1472-00			RES,FXD,FILM:4.7K OHM,5%,0.2W	91637	CCF50-2-47000J
A16A1R2330	313-1472-00			RES,FXD,FILM:4.7K OHM,5%,0.2W	91637	CCF50-2-47000J
A16A1R2331	313-1472-00			RES,FXD,FILM:4.7K OHM,5%,0.2W	91637	CCF50-2-47000J
A16A1R2332	313-1220-00			RES,FXD,FILM:22 OHM,5%,0.2W	91637	CCF50-2-22R00J
A16A1R2333	313-1220-00			RES,FXD,FILM:22 OHM,5%,0.2W	91637	CCF50-2-22R00J
A16A1R2334	313-1220-00			RES,FXD,FILM:22 OHM,5%,0.2W	91637	CCF50-2-22R00J
A16A1R2335	313-1220-00			RES,FXD,FILM:22 OHM,5%,0.2W	91637	CCF50-2-22R00J
A16A1R2336	313-1220-00			RES,FXD,FILM:22 OHM,5%,0.2W	91637	CCF50-2-22R00J
A16A1R2337	313-1472-00			RES,FXD,FILM:4.7K OHM,5%,0.2W	91637	CCF50-2-47000J
A16A1R2338	313-1472-00			RES,FXD,FILM:4.7K OHM,5%,0.2W	91637	CCF50-2-47000J

Component Number	Tektronix Part No.	Serial No. Effective	Dscont	Name & Description	Mfr. Code	Mfr. Part No.
A16A1R2339	313-1472-00			RES,FXD,FILM:4.7K OHM,5%,0.2W	91637	CCF50-2-47000J
A16A1R2340	313-1472-00			RES,FXD,FILM:4.7K OHM,5%,0.2W	91637	CCF50-2-47000J
A16A1R2341	313-1472-00			RES,FXD,FILM:4.7K OHM,5%,0.2W	91637	CCF50-2-47000J
A16A1R2342	313-1472-00			RES,FXD,FILM:4.7K OHM,5%,0.2W	91637	CCF50-2-47000J
A16A1R2343	313-1472-00			RES,FXD,FILM:4.7K OHM,5%,0.2W	91637	CCF50-2-47000J
A16A1R2344	313-1472-00			RES,FXD,FILM:4.7K OHM,5%,0.2W	91637	CCF50-2-47000J
A16A1R2345	313-1472-00			RES,FXD,FILM:4.7K OHM,5%,0.2W	91637	CCF50-2-47000J
A16A1R2346	313-1472-00			RES,FXD,FILM:4.7K OHM,5%,0.2W	91637	CCF50-2-47000J
A16A1R2347	313-1472-00			RES,FXD,FILM:4.7K OHM,5%,0.2W	91637	CCF50-2-47000J
A16A1R2348	313-1472-00			RES,FXD,FILM:4.7K OHM,5%,0.2W	91637	CCF50-2-47000J
A16A1R2349	313-1472-00			RES,FXD,FILM:4.7K OHM,5%,0.2W	91637	CCF50-2-47000J
A16A1R2350	313-1472-00			RES,FXD,FILM:4.7K OHM,5%,0.2W	91637	CCF50-2-47000J
A16A1R2351	313-1472-00			RES,FXD,FILM:4.7K OHM,5%,0.2W	91637	CCF50-2-47000J
A16A1R2352	313-1472-00			RES,FXD,FILM:4.7K OHM,5%,0.2W	91637	CCF50-2-47000J
A16A1R2355	313-1102-00			RES,FXD,FILM:1K OHM,5%,0.2W	91637	CCF50-2-10000J
A16A1R2356	313-1102-00			RES,FXD,FILM:1K OHM,5%,0.2W	91637	CCF50-2-10000J
A16A1R2357	313-1102-00			RES,FXD,FILM:1K OHM,5%,0.2W	91637	CCF50-2-10000J
A16A1R2361	313-1472-00			RES,FXD,FILM:4.7K OHM,5%,0.2W	91637	CCF50-2-47000J
A16A1R2362	313-1472-00			RES,FXD,FILM:4.7K OHM,5%,0.2W	91637	CCF50-2-47000J
A16A1R2363	313-1472-00			RES,FXD,FILM:4.7K OHM,5%,0.2W	91637	CCF50-2-47000J
A16A1R2364	313-1472-00			RES,FXD,FILM:4.7K OHM,5%,0.2W	91637	CCF50-2-47000J
A16A1R2365	313-1472-00			RES,FXD,FILM:4.7K OHM,5%,0.2W	91637	CCF50-2-47000J
A16A1R2400	313-1472-00			RES,FXD,FILM:4.7K OHM,5%,0.2W	91637	CCF50-2-47000J
A16A1R2401	313-1472-00			RES,FXD,FILM:4.7K OHM,5%,0.2W	91637	CCF50-2-47000J
A16A1R2402	313-1472-00			RES,FXD,FILM:4.7K OHM,5%,0.2W	91637	CCF50-2-47000J
A16A1R2404	313-1472-00			RES,FXD,FILM:4.7K OHM,5%,0.2W	91637	CCF50-2-47000J
A16A1R2405	313-1621-00			RES,FXD,FILM:620 OHM,5%,0.2W	91637	CCF50-2-620ROJ
A16A1R2406	322-3220-00			RES,FXD,FILM:1.91K OHM,1%,0.2W,TC=T0MI	91637	CCF501G19100F
A16A1R2407	322-3176-00			RES,FXD,FILM:665 OHM,1%,0.2W,TC=T0MI	91637	CCF50-2
A16A1R2408	322-3172-00			RES,FXD,FILM:604 OHM,1%,0.2W,TC=T0MI	91637	CCF501G604ROF
A16A1R2409	322-3220-00			RES,FXD,FILM:1.91K OHM,1%,0.2W,TC=T0MI	91637	CCF501G19100F
A16A1R2410	322-3172-00			RES,FXD,FILM:604 OHM,1%,0.2W,TC=T0MI	91637	CCF501G604ROF
A16A1R2411	322-3220-00			RES,FXD,FILM:1.91K OHM,1%,0.2W,TC=T0MI	91637	CCF501G19100F
A16A1R2412	313-1102-00			RES,FXD,FILM:1K OHM,5%,0.2W	91637	CCF50-2-10000J
A16A1R2413	322-3202-00			RES,FXD,FILM:1.24K OHM,1%,0.2W,TC=T0MI	91637	CCF50-1G12400F
A16A1R2414	313-1102-00			RES,FXD,FILM:1K OHM,5%,0.2W	91637	CCF50-2-10000J
A16A1R2415	322-3202-00			RES,FXD,FILM:1.24K OHM,1%,0.2W,TC=T0MI	91637	CCF50-1G12400F
A16A1R2416	313-1102-00			RES,FXD,FILM:1K OHM,5%,0.2W	91637	CCF50-2-10000J
A16A1R2417	322-3202-00			RES,FXD,FILM:1.24K OHM,1%,0.2W,TC=T0MI	91637	CCF50-1G12400F
A16A1R2418	322-3077-00			RES,FXD,FILM:61.9 OHM,1%,0.2W,TC=T0MI	91637	CCF501G61R9OF
A16A1R2419	313-1101-00			RES,FXD,FILM:100 OHM,5%,0.2W	91637	CCF50-2-100R0J
A16A1R2420	313-1101-00			RES,FXD,FILM:100 OHM,5%,0.2W	91637	CCF50-2-100R0J
A16A1R2421	313-1621-00			RES,FXD,FILM:620 OHM,5%,0.2W	91637	CCF50-2-620ROJ
A16A1R2501	313-1621-00			RES,FXD,FILM:620 OHM,5%,0.2W	91637	CCF50-2-620ROJ
A16A1R2502	313-1472-00			RES,FXD,FILM:4.7K OHM,5%,0.2W	91637	CCF50-2-47000J

Component Number	Tektronix Part No.	Serial No. Effective	Dscont	Name & Description	Mfr. Code	Mfr. Part No.
A16A1R2503	313-1621-00			RES,FXD,FILM:620 OHM,5%,0.2W	91637	CCF50-2-620ROJ
A16A1R2504	313-1472-00			RES,FXD,FILM:4.7K OHM,5%,0.2W	91637	CCF50-2-47000J
A16A1R2505	313-1621-00			RES,FXD,FILM:620 OHM,5%,0.2W	91637	CCF50-2-620ROJ
A16A1R2506	313-1621-00			RES,FXD,FILM:620 OHM,5%,0.2W	91637	CCF50-2-620ROJ
A16A1R2507	313-1101-00			RES,FXD,FILM:100 OHM,5%,0.2W	91637	CCF50-2-100R0J
A16A1R2508	313-1102-00			RES,FXD,FILM:1K OHM,5%,0.2W	91637	CCF50-2-10000J
A16A1R2509	313-1102-00			RES,FXD,FILM:1K OHM,5%,0.2W	91637	CCF50-2-10000J
A16A1R2510	313-1511-00			RES,FXD,FILM:510 OHM,5%,0.2W	91637	CCF50-2-510ROJ
A16A1R2511	313-1102-00			RES,FXD,FILM:1K OHM,5%,0.2W	91637	CCF50-2-10000J
A16A1R2512	313-1472-00			RES,FXD,FILM:4.7K OHM,5%,0.2W	91637	CCF50-2-47000J
A16A1R2513	313-1472-00			RES,FXD,FILM:4.7K OHM,5%,0.2W	91637	CCF50-2-47000J
A16A1R2514	313-1621-00			RES,FXD,FILM:620 OHM,5%,0.2W	91637	CCF50-2-620ROJ
A16A1R2515	313-1621-00			RES,FXD,FILM:620 OHM,5%,0.2W	91637	CCF50-2-620ROJ
A16A1R2516	313-1621-00			RES,FXD,FILM:620 OHM,5%,0.2W	91637	CCF50-2-620ROJ
A16A1R2517	313-1621-00			RES,FXD,FILM:620 OHM,5%,0.2W	91637	CCF50-2-620ROJ
A16A1R2518	313-1102-00			RES,FXD,FILM:1K OHM,5%,0.2W	91637	CCF50-2-10000J
A16A1R2519	313-1621-00			RES,FXD,FILM:620 OHM,5%,0.2W	91637	CCF50-2-620ROJ
A16A1R2520	307-0499-00			RES,FXD,FILM:9,100K OHM,5%,0.125WTC=200 PPM/DEG C	11236	750-101-R100K O
A16A1R2521	307-0499-00			RES,FXD,FILM:9,100K OHM,5%,0.125WTC=200 PPM/DEG C	11236	750-101-R100K O
A16A1R2522	307-0499-00			RES,FXD,FILM:9,100K OHM,5%,0.125WTC=200 PPM/DEG C	11236	750-101-R100K O
A16A1R2523	313-1102-00			RES,FXD,FILM:1K OHM,5%,0.2W	91637	CCF50-2-10000J
A16A1R2524	313-1102-00			RES,FXD,FILM:1K OHM,5%,0.2W	91637	CCF50-2-10000J
A16A1R2525	313-1621-00			RES,FXD,FILM:620 OHM,5%,0.2W	91637	CCF50-2-620ROJ
A16A1R2526	313-1621-00			RES,FXD,FILM:620 OHM,5%,0.2W	91637	CCF50-2-620ROJ
A16A1R2527	313-1621-00			RES,FXD,FILM:620 OHM,5%,0.2W	91637	CCF50-2-620ROJ
A16A1R2528	313-1621-00			RES,FXD,FILM:620 OHM,5%,0.2W	91637	CCF50-2-620ROJ
A16A1R2529	313-1621-00			RES,FXD,FILM:620 OHM,5%,0.2W	91637	CCF50-2-620ROJ
A16A1R2532	313-1102-00			RES,FXD,FILM:1K OHM,5%,0.2W	91637	CCF50-2-10000J
A16A1R2534	313-1102-00			RES,FXD,FILM:1K OHM,5%,0.2W	91637	CCF50-2-10000J
A16A1R2536	313-1102-00			RES,FXD,FILM:1K OHM,5%,0.2W	91637	CCF50-2-10000J
A16A1R2538	313-1102-00			RES,FXD,FILM:1K OHM,5%,0.2W	91637	CCF50-2-10000J
A16A1R2540	313-1102-00			RES,FXD,FILM:1K OHM,5%,0.2W	91637	CCF50-2-10000J
A16A1R2542	313-1102-00			RES,FXD,FILM:1K OHM,5%,0.2W	91637	CCF50-2-10000J
A16A1R2545	313-1220-00	B113798		RES,FXD,FILM:22 OHM,5%,0.2W (2246 MOD A,2Y)	91637	CCF50-2-22R00J
A16A1R2545	313-1220-00	B711093		RES,FXD,FILM:22 OHM,5%,0.2W (2246 1Y)	91637	CCF50-2-22R00J
A16A1R2546	313-1220-00			RES,FXD,FILM:22 OHM,5%,0.2W	91637	CCF50-2-22R00J
A16A1R2547	313-1220-00			RES,FXD,FILM:22 OHM,5%,0.2W	91637	CCF50-2-22R00J
A16A1R2548	313-1220-00			RES,FXD,FILM:22 OHM,5%,0.2W	91637	CCF50-2-22R00J
A16A1R2549	313-1220-00			RES,FXD,FILM:22 OHM,5%,0.2W	91637	CCF50-2-22R00J
A16A1R2550	313-1220-00			RES,FXD,FILM:22 OHM,5%,0.2W	91637	CCF50-2-22R00J

Component Number	Tektronix Part No.	Serial No. Effective	Serial No. Dscont	Name & Description	Mfr. Code	Mfr. Part No.
A16A1R2551	313-1220-00			RES,FXD,FILM:22 OHM,5%,0.2W	91637	CCF50-2-22R00J
A16A1R2552	313-1220-00			RES,FXD,FILM:22 OHM,5%,0.2W	91637	CCF50-2-22R00J
A16A1R2553	313-1220-00			RES,FXD,FILM:22 OHM,5%,0.2W	91637	CCF50-2-22R00J
A16A1R2554	313-1102-00			RES,FXD,FILM:1K OHM,5%,0.2W	91637	CCF50-2-10000J
A16A1R2555	313-1101-00			RES,FXD,FILM:100 OHM,5%,0.2W	91637	CCF50-2-100R0J
A16A1R2560	313-1101-00			RES,FXD,FILM:100 OHM,5%,0.2W	91637	CCF50-2-100R0J
A16A1R2561	313-1101-00			RES,FXD,FILM:100 OHM,5%,0.2W	91637	CCF50-2-100R0J
A16A1R2562	313-1101-00			RES,FXD,FILM:100 OHM,5%,0.2W	91637	CCF50-2-100R0J
A16A1R2563	313-1101-00			RES,FXD,FILM:100 OHM,5%,0.2W	91637	CCF50-2-100R0J
A16A1R2564	313-1101-00			RES,FXD,FILM:100 OHM,5%,0.2W	91637	CCF50-2-100R0J
A16A1R2565	313-1621-00	B113798		RES,FXD,FILM:620 OHM,5%,0.2W (2246 MOD A,2Y)	91637	CCF50-2-620ROJ
A16A1R2565	313-1621-00	B711093		RES,FXD,FILM:620 OHM,5%,0.2W (2246 1Y)	91637	CCF50-2-620ROJ
A16A1U2300	156-1646-00			IC,DIGITAL:HCTCMOS,FLIP FLOP;OCTAL D-TYPE,3-STATE	18324	74HCT374N
A16A1U2301	156-1646-00			IC,DIGITAL:HCTCMOS,FLIP FLOP;OCTAL D-TYPE,3-STATE	18324	74HCT374N
A16A1U2302	156-1589-00			IC,CONVERTER:BIPOLAR,D/A;12 BIT,CURRENT OUT,MULTIPLYING	24355	DAC312-040P (ST
A16A1U2303	156-0513-00			IC,MISC:CMOS,ANALOG MUX;8 CHANNEL	04713	MC14051B (CP OR
A16A1U2304	156-1200-00			IC,LINEAR:BIFET,OP-AMP;QUAD	01295	TL074CN
A16A1U2305	156-1200-00			IC,LINEAR:BIFET,OP-AMP;QUAD	01295	TL074CN
A16A1U2306	156-1126-00			IC,LINEAR:BIPOLAR,COMPARATOR;OPEN COLLECTOR,200NS	01295	LM311P
A16A1U2308	156-0513-00			IC,MISC:CMOS,ANALOG MUX;8 CHANNEL	04713	MC14051B (CP OR
A16A1U2309	156-0513-00			IC,MISC:CMOS,ANALOG MUX;8 CHANNEL	04713	MC14051B (CP OR
A16A1U2313	156-1646-00			IC,DIGITAL:HCTCMOS,FLIP FLOP;OCTAL D-TYPE,3-STATE	18324	74HCT374N
A16A1U2314	156-1149-00			IC,LINEAR:BIFET,OP-AMP;	27014	LF351N/GLEA134
A16A1U2400	160-3493-00			MICROCKT,DGTL:8 BIT MICROCOMPUTER, MASKED FOR READOUT SYSTEM	04713	SC84477P
A16A1U2401	156-1646-00			IC,DIGITAL:HCTCMOS,FLIP FLOP;OCTAL D-TYPE,3-STATE	18324	74HCT374N
A16A1U2402	156-1646-00			IC,DIGITAL:HCTCMOS,FLIP FLOP;OCTAL D-TYPE,3-STATE	18324	74HCT374N
A16A1U2403	156-1646-00			IC,DIGITAL:HCTCMOS,FLIP FLOP;OCTAL D-TYPE,3-STATE	18324	74HCT374N
A16A1U2404	156-0412-00			IC,DIGITAL:LSTTL,COUNTER;SYNCH 4-BIT UP/DOWN BINARY	01295	SN74LS193N
A16A1U2405	156-0412-00			IC,DIGITAL:LSTTL,COUNTER;SYNCH 4-BIT UP/DOWN BINARY	01295	SN74LS193N
A16A1U2406	156-1594-00	B100100	B102625	IC,MEMORY:NMOS,SRAM;2K X 8,150NS (2246 MOD A,2Y)	S0482	CXK5816PN-12

Component Number	Tektronix Part No.	Serial No. Effective	Dscont	Name & Description	Mfr. Code	Mfr. Part No.
A16A1U2406	156-2016-00	B102626		IC,MEMORY:NMOS,SRAM;2K X 8,100NS,OE (2246 MOD A,2Y)	65786	CY6116-55PC
A16A1U2406	156-1594-00	B700100	B710186	IC,MEMORY:NMOS,SRAM;2K X 8,150NS (2246 1Y)	S0482	CXK5816PN-12
A16A1U2406	156-2016-00	B710187		IC,MEMORY:NMOS,SRAM;2K X 8,100NS,OE (2246 1Y)	65786	CY6116-55PC
A16A1U2407	156-1172-00			IC,DIGITAL:LSTTL,COUNTER;DUAL 4-BIT BINARY	01295	SN74LS393N
A16A1U2408	160-5391-00			MICROCKT,DGTL:NMOS,4096 X 8 EPROM,PRGM2732A,DIP24.6	TK2172	160-5391-00
A16A1U2409	156-1172-00			IC,DIGITAL:LSTTL,COUNTER;DUAL 4-BIT BINARY	01295	SN74LS393N
A16A1U2410	160-4085-00			MICROCKT,DGTL:TTL,OCTAL 16 INPUT REGISTERED	34335	PAL16R8A4CN H07
A16A1U2411	156-1646-00			IC,DIGITAL:HCTCMOS,FLIP FLOP;OCTAL D-TYPE,3-STATE	18324	74HCT374N
A16A1U2412	156-1255-00			IC,CONVERTER:BIPOLAR,D/A;8 BIT,85NS, CURRENT	24355	DAC08-415P (STD
A16A1U2413	156-1255-00			IC,CONVERTER:BIPOLAR,D/A;8 BIT,85NS, CURRENT	24355	DAC08-415P (STD
A16A1U2414	156-0514-00			IC,MISC:CMOS,ANALOG MUX;DUAL 4 CHANNEL	04713	MC14052BCP
A16A1U2415	156-0514-00			IC,MISC:CMOS,ANALOG MUX;DUAL 4 CHANNEL	04713	MC14052BCP
A16A1U2416	156-1200-00			IC,LINEAR:BIFET,OP-AMP;QUAD	01295	TL074CN
A16A1U2417	156-0382-00			IC,DIGITAL:LSTTL,GATES;QUAD 2-INPUT NAND	01295	SN74LS00N
A16A1U2501	156-2003-01			MICROCKT,DGTL:MOS,8 BIT MICROPRC,8 MHZ80188,LCC68	34335	R80188
A16A1U2502	156-2396-00			IC,MISC:BIPOLAR,PWR SUPPLY SUPERVISOR;MPU RESET GENERATOR,5V SUPPLY SENSING	01295	TL7705 ACP
A16A1U2503	156-0479-00			IC,DIGITAL:LSTTL,GATES;QUAD 2-INPUT OR	01295	SN74LS32N
A16A1U2506	156-0382-00			IC,DIGITAL:LSTTL,GATES;QUAD 2-INPUT NAND	01295	SN74LS00N
A16A1U2512	156-1065-00			IC,DIGITAL:LSTTL,LATCH;OCTAL D TRANSPARENT	01295	SN74LS373N
A16A1U2513	156-1065-00			IC,DIGITAL:LSTTL,LATCH;OCTAL D TRANSPARENT	01295	SN74LS373N
A16A1U2514	156-1111-00			IC,DIGITAL:LSTTL,TRANSCEIVER;OCTAL NONINV, 3-STATE	01295	SN74LS245N
A16A1U2515	156-1111-00			IC,DIGITAL:LSTTL,TRANSCEIVER;OCTAL NONINV, 3-STATE	01295	SN74LS245N
A16A1U2517	156-0469-00			IC,DIGITAL:LSTTL,DEMUX/DECODER;3-TO-8 DECODER	01295	SN74LS138 (N OR
A16A1U2518	156-0469-00			IC,DIGITAL:LSTTL,DEMUX/DECODER;3-TO-8 DECODER	01295	SN74LS138 (N OR
A16A1U2521	156-2473-00			IC,MEMORY:CMOS,SRAM;8K X 8,200NS,10UA,OE	0JR04	TC5564PL-20
A16A1U2523	156-1646-00			IC,DIGITAL:HCTCMOS,FLIP FLOP;OCTAL D-TYPE,3-STATE	18324	74HCT374N
A16A1U2524	156-1646-00			IC,DIGITAL:HCTCMOS,FLIP FLOP;OCTAL D-TYPE,3-STATE	18324	74HCT374N
A16A1U2525	156-1058-00			IC,DIGITAL:STTL,BUFFER/DRIVER;OCTAL INV, 3-STATE	01295	SN74S240N
A16A1W2105	174-1040-00			CA ASSY,SP,ELEC:17 COND,5.1 L,RIBBON	00779	487839-1
A16A1XU2400	136-0755-00			SOCKET,DIP::PCB,;28 POS,2 X 14,0.1 X 0.6 CTR,0.175 H X 0.13 TAIL,BECU,TIN	09922	DILB28P-108
A16A1XU2501	136-0813-00			SKT,PL-IN ELEK:CHIP CARRIER,68 CONTACTS	53387	268-5400-00-110

Component Number	Tektronix Part No.	Serial No. Effective	Dscont	Name & Description	Mfr. Code	Mfr. Part No.
A16A1XU2519	136-0963-00			SOCKET,DIP:PCB,;STR,2 X 16,32 POS,0.1 X 0.6 M 0.008-0.014 THK IC LEAD	00779	2-644018-3
A16A1Y2501	119-2936-00	B100100	B113058	RESONATOR:16MHZ,CER (2246 MOD A,2Y)	51406	CSA 16.00MX11
A16A1Y2501	119-2936-01	B113059		RESONATOR:16MHZ,CER (2246 MOD A,2Y)	TK2058	82501009
A16A1Y2501	119-2936-00	B700100	B711085	RESONATOR:16MHZ,CER (2246 1Y)	51406	CSA 16.00MX11
A16A1Y2501	119-2936-01	B711086		RESONATOR:16MHZ,CER (2246 1Y)	TK2058	82501009

Component Number	Tektronix Part No.	Serial No. Effective	Dscont	Name & Description	Mfr. Code	Mfr. Part No.
A18	670-9398-04			CIRCUIT BD ASSY:LV POWER SUPPLY (2246 1Y)	80009	670939804
A18	670-9398-04			CIRCUIT BD ASSY:LV POWER SUPPLY (2246 MOD A,2Y)	80009	670939804
A18C2201	285-1177-01			CAP,FXD,PLASTIC:1UF,10%,450V	84411	TEK326 1.0 10 4
A18C2202	290-1206-00			CAP,FXD,ELCTLT:270UF,20%,450V,	1W344	SMG450VR271M35 X
A18C2203	290-0922-01			CAP,FXD,ELCTLT:1000UF,4100% -10%,50V	01884	ORDER BY DESC
A18C2204	290-1151-00			CAP,FXD,ELCTLT:100UF,20%,63V	55680	UEB1J101MRAICA
A18C2206	281-0775-01			CAP,FXD,CER DI:0.1UF,20%,50V	04222	SA105E104MAA
A18C2207	281-0775-01			CAP,FXD,CER DI:0.1UF,20%,50V	04222	SA105E104MAA
A18C2208	290-1144-00			CAP,FXD,ELCTLT:4.7UF,20%,100V	1W344	SM100VB4R7M6X11
A18C2209	281-0773-00			CAP,FXD,CER DI:0.01UF,10%,100V,,TUBULAR,MI	04222	SA201C103KAA
A18C2210	290-1144-00			CAP,FXD,ELCTLT:4.7UF,20%,100V	1W344	SM100VB4R7M6X11
A18C2211	281-0773-00			CAP,FXD,CER DI:0.01UF,10%,100V,,TUBULAR,MI	04222	SA201C103KAA
A18C2212	281-0761-00			CAP,FXD,CER DI:27PF,5%,100V	04222	SA101A270JAA
A18C2213	285-1381-00			CAP,FXD,MTLZD:1500PF,10%,250V	TK0515	PME271Y415
A18C2214	285-1381-00			CAP,FXD,MTLZD:1500PF,10%,250V	TK0515	PME271Y415
A18C2215	285-1252-00			CAP,FXD,PLASTIC:0.15UF,10%,250VAC,	D5243	F1772-415-2000
A18C2216	285-1252-00			CAP,FXD,PLASTIC:0.15UF,10%,250VAC,	D5243	F1772-415-2000
A18C2217	285-1381-00			CAP,FXD,MTLZD:1500PF,10%,250V	TK0515	PME271Y415
A18C2218	281-0813-00			CAP,FXD,CER DI:0.047UF,20%,50V	04222	SA105E473MAA
A18C2219	281-0773-00			CAP,FXD,CER DI:0.01UF,10%,100V,,TUBULAR,MI	04222	SA201C103KAA
A18C2221	290-1129-00			CAP,FXD,ELCTLT:1000UF,+100%-10%,12V	24165	672D108H012DS2A
A18C2222	290-1129-00			CAP,FXD,ELCTLT:1000UF,+100%-10%,12V	24165	672D108H012DS2A
A18C2223	290-1129-00			CAP,FXD,ELCTLT:1000UF,+100%-10%,12V	24165	672D108H012DS2A
A18C2224	290-1129-00			CAP,FXD,ELCTLT:1000UF,+100%-10%,12V	24165	672D108H012DS2A
A18C2225	290-1129-00			CAP,FXD,ELCTLT:1000UF,+100%-10%,12V	24165	672D108H012DS2A
A18C2226	290-1129-00			CAP,FXD,ELCTLT:1000UF,+100%-10%,12V	24165	672D108H012DS2A
A18C2227	290-1129-00			CAP,FXD,ELCTLT:1000UF,+100%-10%,12V	24165	672D108H012DS2A
A18C2228	290-1129-00			CAP,FXD,ELCTLT:1000UF,+100%-10%,12V	24165	672D108H012DS2A
A18C2229	290-1128-00			CAP,FXD,ELCTLT:470UF,+100%,25V	24165	672D477H025DS2A
A18C2230	290-1128-00			CAP,FXD,ELCTLT:470UF,+100%,25V	24165	672D477H025DS2A
A18C2232	290-1130-00			CAP,FXD,ELCTLT:39UF,+100%-10%,150V	24165	672D396H150ET2A
A18C2233	290-1130-00			CAP,FXD,ELCTLT:39UF,+100%-10%,150V	24165	672D396H150ET2A
A18C2234	290-1128-00			CAP,FXD,ELCTLT:470UF,+100%,25V	24165	672D477H025DS2A
A18C2236	290-1128-00			CAP,FXD,ELCTLT:470UF,+100%,25V	24165	672D477H025DS2A
A18C2238	290-1144-00			CAP,FXD,ELCTLT:4.7UF,20%,100V	1W344	SM100VB4R7M6X11
A18C2239	281-0775-01			CAP,FXD,CER DI:0.1UF,20%,50V	04222	SA105E104MAA
A18C2243	281-0770-00			CAP,FXD,CER DI:1000PF,20%,100V	04222	SA101C102MAA
A18C2244	285-1184-01			CAP,FXD,MTLZD:0.01UF,20%,4KV	84411	TEK183 .01 20 4
A18C2245	285-1184-01			CAP,FXD,MTLZD:0.01UF,20%,4KV	84411	TEK183 .01 20 4
A18C2248	290-1151-00			CAP,FXD,ELCTLT:100UF,20%,63V	55680	UEB1J101MRAICA

Component Number	Tektronix Part No.	Serial No. Effective	Dscont	Name & Description	Mfr. Code	Mfr. Part No.
A18C2249	281-0773-00			CAP,FXD,CER DI:0.01UF,10%,100V,,TUBULAR,MI	04222	SA201C103KAA
A18CR2201	152-0661-01			SEMICOND DVC,DI:RECT,SI,600V,3A	04713	MUR460RL
A18CR2202	152-0400-00			DIODE,RECT:,FAST RCVRY;400V,1A,200NS	14552	MB2501
A18CR2204	152-0400-00			DIODE,RECT:,FAST RCVRY;400V,1A,200NS	14552	MB2501
A18CR2205	152-0400-00			DIODE,RECT:,FAST RCVRY;400V,1A,200NS	14552	MB2501
A18CR2206	152-0582-00			DIODE,RECT:SCHTKY,;20V,3A,.475VF,80A IFSM	04713	1N5820
A18CR2207	152-0582-00			DIODE,RECT:SCHTKY,;20V,3A,.475VF,80A IFSM	04713	1N5820
A18CR2208	152-0400-00			DIODE,RECT:,FAST RCVRY;400V,1A,200NS	14552	MB2501
A18CR2209	152-0400-00			DIODE,RECT:,FAST RCVRY;400V,1A,200NS	14552	MB2501
A18CR2210	152-0400-00			DIODE,RECT:,FAST RCVRY;400V,1A,200NS	14552	MB2501
A18CR2211	152-0400-00			DIODE,RECT:,FAST RCVRY;400V,1A,200NS	14552	MB2501
A18CR2212	152-0400-00			DIODE,RECT:,FAST RCVRY;400V,1A,200NS	14552	MB2501
A18CR2213	152-0400-00			DIODE,RECT:,FAST RCVRY;400V,1A,200NS	14552	MB2501
A18CR2214	152-0400-00			DIODE,RECT:,FAST RCVRY;400V,1A,200NS	14552	MB2501
A18CR2215	152-0400-00			DIODE,RECT:,FAST RCVRY;400V,1A,200NS	14552	MB2501
A18CR2216	152-0400-00			DIODE,RECT:,FAST RCVRY;400V,1A,200NS	14552	MB2501
A18CR2218	152-0400-00			DIODE,RECT:,FAST RCVRY;400V,1A,200NS	14552	MB2501
A18CR2219	152-0581-00			DIODE,RECT:SCHTKY,;20V,1A,.450VF,25A IFSM	04713	1N5817
A18CR2220	152-0581-00			DIODE,RECT:SCHTKY,;20V,1A,.450VF,25A IFSM	04713	1N5817
A18CR2227	152-0400-00			DIODE,RECT:,FAST RCVRY;400V,1A,200NS	14552	MB2501
A18CR2228	152-0400-00			DIODE,RECT:,FAST RCVRY;400V,1A,200NS	14552	MB2501
A18CR2231	152-0040-00			DIODE,RECT:,;600V,1A,50A IFSM	14936	GP15J-069
A18CR2232	152-0040-00			DIODE,RECT:,;600V,1A,50A IFSM	14936	GP15J-069
A18CR2233	152-0040-00			DIODE,RECT:,;600V,1A,50A IFSM	14936	GP15J-069
A18CR2234	152-0040-00			DIODE,RECT:,;600V,1A,50A IFSM	14936	GP15J-069
A18CR2235	152-0400-00			DIODE,RECT:,FAST RCVRY;400V,1A,200NS	14552	MB2501
A18CR2236	152-0400-00			DIODE,RECT:,FAST RCVRY;400V,1A,200NS	14552	MB2501
A18CR2237	152-0141-02			DIODE,SIG:,ULTRA FAST;40V,150MA,4NS,2PF	27014	FDH9427
A18DS2201	150-0035-00			LAMP,GLOW:90V MAX,0.3MA,AID-T,WIRE LD	TK0213	JH005/3011JA
A18J2208	131-3645-00			CONN,HDR:PCB,;MALE,STR,1 X 3,0.1 CTR,0.295 MLG X 0.140 TAIL,TIN	00779	644292-3
A18J2225	131-3486-00			CONN,HDR:PCB,;MALE,STR,1 X 2,0.1 CTR,0.295 MLG X 0.140 TAIL,TIN	00779	644292-2
A18L2201	108-1324-00			COIL,RF:FXD,33UH,POWER	54583	0L1338-330K5R0
A18L2202	108-1319-00			INDUCTOR,FIXED:33UH,10%,1.8A	54583	TSL1110-330K 1R
A18L2203	108-1319-00			INDUCTOR,FIXED:33UH,10%,1.8A	54583	TSL1110-330K 1R
A18L2204	108-1319-00			INDUCTOR,FIXED:33UH,10%,1.8A	54583	TSL1110-330K 1R
A18L2205	108-1319-00			INDUCTOR,FIXED:33UH,10%,1.8A	54583	TSL1110-330K 1R
A18L2206	108-1396-00	B700100	B711084	INDUCTOR,FIXED:150UH,10%,0.82 A, RADIAL LEAD (2246 1Y)	TK2058	TSL1110-151KR82
A18L2206	108-1319-00	B711085		INDUCTOR,FIXED:33UH,10%,1.8A (2246 1Y)	54583	TSL1110-330K 1R
A18L2206	108-1396-00	B100100	B113046	INDUCTOR,FIXED:150UH,10%,0.82 A, RADIAL LEAD (2246 MOD A,2Y)	TK2058	TSL1110-151KR82

Component Number	Tektronix Part No.	Serial No. Effective	Dscont	Name & Description	Mfr. Code	Mfr. Part No.
A18L2206	108-1319-00	B113047		INDUCTOR,FIXED:33UH,10%,1.8A (2246 MOD A,2Y)	54583	TSL1110-330K 1R
A18L2207	108-1357-00			COIL,RF:FXD,POWER	TK1441	86-343-2
A18L2208	108-1357-00			COIL,RF:FXD,POWER	TK1441	86-343-2
A18P2204	131-3637-00			CONN,HDR PWR::PCB,;MALE,STR,1 X 13,0.156 CTR,0.953 MLG X 0.120 TAIL	27264	A-41661-A-13E50
A18Q2201	151-1214-00			TRANSISTOR,PWR:MOS,N-CH;500V,4.5A,1.5 OHM	04713	STP4063
A18Q2202	151-0190-00			TRANSISTOR,SIG:BIPOLAR,NPN;40V,200MA, 300MHZ,AMPLIFIER	04713	2N3904
A18Q2203	151-0188-00			TRANSISTOR,SIG:BIPOLAR,PNP;40V,200MA, 250MHZ,AMPLIFIER	04713	2N3906
A18Q2204	151-0190-00			TRANSISTOR,SIG:BIPOLAR,NPN;40V,200MA, 300MHZ,AMPLIFIER	04713	2N3904
A18Q2206	151-0565-00			THYRISTOR,SCR:8A,200V,SENS GATE,TO-220 W/LEADFORM	04713	SCR2117
A18Q2208	151-0190-00			TRANSISTOR,SIG:BIPOLAR,NPN;40V,200MA, 300MHZ,AMPLIFIER	04713	2N3904
A18Q2209	151-0476-03			TRANSISTOR:POWER,W/LEAD FORM,TO-220SELECTED,TIP31C	04713	SJE389-001
A18Q2210	151-0476-03			TRANSISTOR:POWER,W/LEAD FORM,TO-220SELECTED,TIP31C	04713	SJE389-001
A18Q2211	151-0188-00			TRANSISTOR,SIG:BIPOLAR,PNP;40V,200MA, 250MHZ,AMPLIFIER	04713	2N3906
A18Q2212	151-0276-01			TRANSISTOR,SIG:BIPOLAR,PNP;50V,50MA,40MHZ, AMPLIFIER	0JR04	S1423-TPE2 (AMM
A18Q2213	151-0276-01			TRANSISTOR,SIG:BIPOLAR,PNP;50V,50MA,40MHZ, AMPLIFIER	0JR04	S1423-TPE2 (AMM
A18Q2214	151-1197-00			TRANSISTOR,PWR:MOS,N-CH;60V,12A,0.25 OHM	04713	IRF533 W/LEADFO
A18R2201	308-0678-00			RES,FXD,WW:0.1 OHM,5%,2W	91637	CPF-2-R10J-T/R
A18R2203	301-0184-00			RES,FXD,FILM:180K OHM,5%,0.5W	57668	TR50J-E180K
A18R2204	301-0184-00			RES,FXD,FILM:180K OHM,5%,0.5W	57668	TR50J-E180K
A18R2205	313-1104-00			RES,FXD,FILM:100K OHM,5%,0.2W	91637	CCF50-2-10002J
A18R2206	313-1104-00			RES,FXD,FILM:100K OHM,5%,0.2W	91637	CCF50-2-10002J
A18R2207	322-3164-00			RES,FXD,FILM:499 OHM,1%,0.2W,TC=T0MI	91637	CCF501G499ROF
A18R2208	313-1102-00			RES,FXD,FILM:1K OHM,5%,0.2W	91637	CCF50-2-10000J
A18R2209	313-1104-00			RES,FXD,FILM:100K OHM,5%,0.2W	91637	CCF50-2-10002J
A18R2210	313-1513-00			RES,FXD,CMPSN:51K OHM,5%,0.2W	91637	CCF50-2-51001J
A18R2211	313-1332-00			RES,FXD,FILM:3.3K OHM,5%,0.2W	91637	CCF50-2-33000J
A18R2212	313-1822-00			RES,FXD,FILM:8.2K,OHM,5%,0.2W	91637	CCF50-2-82000J
A18R2215	313-1272-00	B100100	B110219	RES,FXD,FILM:2.7K OHM,5%,0.2W (2246 MOD A,2Y)	91637	CCF50-2-27000J
A18R2215	313-1222-00	B110220		RES,FXD,FILM:2.2K OHM,5%,0.2W (2246 MOD A,2Y)	91637	CCF50-2-22000J
A18R2215	313-1272-00	B700100	B710142	RES,FXD,FILM:2.7K OHM,5%,0.2W (2246 1Y)	91637	CCF50-2-27000J
A18R2215	313-1222-00	B710143		RES,FXD,FILM:2.2K OHM,5%,0.2W (2246 1Y)	91637	CCF50-2-22000J
A18R2216	313-1102-00			RES,FXD,FILM:1K OHM,5%,0.2W	91637	CCF50-2-10000J
A18R2218	313-1101-00			RES,FXD,FILM:100 OHM,5%,0.2W	91637	CCF50-2-100R0J
A18R2219	313-1105-00			RES,FXD,FILM:1M OHM,5%,0.2W	91637	CCF50-2-10003J
A18R2220	313-1105-00			RES,FXD,FILM:1M OHM,5%,0.2W	91637	CCF50-2-10003J

Component Number	Tektronix Part No.	Serial No. Effective	Dscont	Name & Description	Mfr. Code	Mfr. Part No.
A18R2221	313-1203-00			RES,FXD,FILM:20K OHM,5%,0.2W	91637	CCF50-2-20001J
A18R2222	313-1103-00			RES,FXD,FILM:10K OHM,5%,0.2W	91637	CCF50-2-10001J
A18R2223	313-1105-00			RES,FXD,FILM:1M OHM,5%,0.2W	91637	CCF50-2-10003J
A18R2224	313-1101-00			RES,FXD,FILM:100 OHM,5%,0.2W	91637	CCF50-2-100R0J
A18R2225	313-1101-00			RES,FXD,FILM:100 OHM,5%,0.2W	91637	CCF50-2-100R0J
A18R2226	301-0274-00			RES,FXD,FILM:270K OHM,5%,0.5W	19701	5053CX270K0J
A18R2227	313-1102-00			RES,FXD,FILM:1K OHM,5%,0.2W	91637	CCF50-2-10000J
A18R2228	313-1102-00			RES,FXD,FILM:1K OHM,5%,0.2W	91637	CCF50-2-10000J
A18R2229	301-0823-00			RES,FXD,FILM:82K OHM,5%,0.5W	TK1727	SFR30 2322-182-
A18R2230	301-0823-00			RES,FXD,FILM:82K OHM,5%,0.5W	TK1727	SFR30 2322-182-
A18R2231	315-0101-03			RES,FXD,CMPSN:100 OHM,5%,0.25W	01121	CB1015
A18R2232	313-1102-00			RES,FXD,FILM:1K OHM,5%,0.2W	91637	CCF50-2-10000J
A18R2233	313-1103-00			RES,FXD,FILM:10K OHM,5%,0.2W	91637	CCF50-2-10001J
A18R2236	313-1104-00			RES,FXD,FILM:100K OHM,5%,0.2W	91637	CCF50-2-10002J
A18R2237	313-1105-00			RES,FXD,FILM:1M OHM,5%,0.2W	91637	CCF50-2-10003J
A18R2238	313-1753-00			RES,FXD,FILM:75K OHM,5%,0.2W	91637	CCF50-2-75001J
A18R2239	313-1103-00			RES,FXD,FILM:10K OHM,5%,0.2W	91637	CCF50-2-10001J
A18R2240	313-1204-00			RES,FXD,FILM:200K,5%,0.2W	91637	CCF50-2-20002J
A18R2241	313-1103-00			RES,FXD,FILM:10K OHM,5%,0.2W	91637	CCF50-2-10001J
A18R2242	313-1027-00			RES,FXD,FILM:2.7 OHM,5%,0.2W	57668	TR20JE 02E7
A18R2243	313-1027-00			RES,FXD,FILM:2.7 OHM,5%,0.2W	57668	TR20JE 02E7
A18R2245	313-1103-00			RES,FXD,FILM:10K OHM,5%,0.2W	91637	CCF50-2-10001J
A18R2246	313-1513-00			RES,FXD,CMPSN:51K OHM,5%,0.2W	91637	CCF50-2-51001J
A18R2247	322-3289-00			RES,FXD,FILM:10K OHM,1%,0.2W,TC=T0	91637	CCF50G10001F
A18R2248	313-1513-00			RES,FXD,CMPSN:51K OHM,5%,0.2W	91637	CCF50-2-51001J
A18R2250	301-0106-00			RES,FXD,FILM:10M OHM,5%,0.50W	01121	EB1065
A18R2252	311-2270-00			RES,VAR,NONWW:TRMR,10K OHM,20%,0.5WLINEAR,MI	32997	ADVISE
A18R2253	313-1101-00			RES,FXD,FILM:100 OHM,5%,0.2W	91637	CCF50-2-100R0J
A18R2254	313-1051-00			RES,FXD,FILM:5.1 OHM,5%,0.2W	91637	CT3-5R100J
A18R2255	313-1051-00			RES,FXD,FILM:5.1 OHM,5%,0.2W	91637	CT3-5R100J
A18R2256	301-0274-00			RES,FXD,FILM:270K OHM,5%,0.5W	19701	5053CX270K0J
A18R2257	301-0200-00			RES,FXD,FILM:20 OHM,5%,0.5W	19701	5053CX20R00J
A18R2259	315-0472-03			RES,FXD,CMPSN:4.7K OHM,5%,0.25W	01121	CB4725
A18R2260	301-0560-00			RES,FXD,FILM:56 OHM,5%,0.5W	01121	EB5605
A18R2265	313-1101-00			RES,FXD,FILM:100 OHM,5%,0.2W	91637	CCF50-2-100R0J
A18R2266	315-0472-03			RES,FXD,CMPSN:4.7K OHM,5%,0.25W	01121	CB4725
A18R2267	307-0113-00			RES,FXD,CMPSN:5.1 OHM,5%,0.25W	01121	CB51G5
A18R2268	313-1103-00			RES,FXD,FILM:10K OHM,5%,0.2W	91637	CCF50-2-10001J
A18R2270	313-1103-00			RES,FXD,FILM:10K OHM,5%,0.2W	91637	CCF50-2-10001J
A18R2271	313-1512-00			RES,FXD,FILM:5.1K OHM,5%,0.2W	91637	CCF50-2-51000J

Component Number	Tektronix Part No.	Serial No. Effective	Dscont	Name & Description	Mfr. Code	Mfr. Part No.
A18R2272	313-1051-00			RES,FXD,FILM:5.1 OHM,5%,0.2W	91637	CT3-5R100J
A18R2273	313-1051-00			RES,FXD,FILM:5.1 OHM,5%,0.2W	91637	CT3-5R100J
A18R2274	313-1103-00			RES,FXD,FILM:10K OHM,5%,0.2W	91637	CCF50-2-10001J
A18R2275	301-0432-00			RES,FXD,FILM:4.3K OHM,5%,0.5W	TK1727	SFR30 2322-182-
A18R2276	313-1102-00			RES,FXD,FILM:1K OHM,5%,0.2W	91637	CCF50-2-10000J
A18RT2201	307-0863-00	B100100	B113898	RES,THERMAL:10 OHM,10%,NTC (2246 MOD A,2Y)	15454	SG-13S
A18RT2201	307-1551-00	B113899		RES,THERMAL:20 OHM,10%,NTC, (2246 MOD A,2Y)	91637	TECHNO COMPONEN
A18RT2201	307-0863-00	B700100	B711093	RES,THERMAL:10 OHM,10%,NTC (2246 1Y)	15454	SG-13S
A18RT2201	307-1551-00	B711094		RES,THERMAL:20 OHM,10%,NTC, (2246 1Y)	91637	TECHNO COMPONEN
A18S2201	260-2443-00			SWITCH,PUSH:POWER,DPST,6A,250VAC,	31918	130238
A18S2202	260-2318-00			SWITCH,THRMSTC:NC,105 DEG C OPEN,80 DEG C CLOSED,10A,240VAC	14604	2455R-161-101
A18T2203	120-1686-00			TRANSFORMER,RF:COUPLED INDUCTOR,	75498	ORDER BY DESC
A18T2204	120-1685-01			XFMR,PWR,STU:HIGH VOLTAGE,	75498	ORDER BY DESC
A18T2205	120-1347-00			TRANSFORMER,RF:DRIVER SATURATING	54583	BDT-001
A18T2206	120-1401-00			XFMR,TRIGGER:LINE,1:1 TURNS RATIO,	54937	DMI 500-2044
A18U2201	156-2395-00			MICROCKT,LINEAR:BIPOLAR,PWM POWER SUPPLY,CONTROLLER	04713	MC34060AP
A18U2230	152-0926-00			SEMICOND DVC,DI:HIGH VOLTAGE MULTIPLIER,INPUT VOLTAGE 5.7KVAC PEAK TOPEAK,OUTPUT VOLTAGE 13750VDC	51406	MSL8523
A18VR2201	152-0255-00			DIODE,ZENER:,;51V,5%,0.4W	04713	1N978BRL
A18VR2202	152-0166-00			DIODE,ZENER:,;6.2V,5%,0.4W	04713	SZ11738RL
A18VR2203	152-0304-00			DIODE,ZENER:,;20V,5%,0.4W	04713	1N968BRL
A18VR2204	307-0456-00			RES,V SENSITIVE:250VAC,20W,METAL OXIDE	34371	MOV-V250LA20A
A18VR2205	152-0166-00			DIODE,ZENER:,;6.2V,5%,0.4W	04713	SZ11738RL
A18VR2206	152-0282-00			DIODE,ZENER:,;30V,2%,0.4W	04713	1N972CRL
A18VR2207	152-0304-00			DIODE,ZENER:,;20V,5%,0.4W	04713	1N968BRL
A18W28	196-3093-00			LEAD,ELECTRICAL:18 AWG,3.3 L,8-9,	0J7N9	PER TEK DRAWING
A18W29	196-3092-00			LEAD,ELECTRICAL:18 AWG,3.3 L,8-0,	0J7N9	PER TEK DRAWING
A18W31	196-3094-00			LEAD,ELECTRICAL:26 AWG,2.6 L,9-N	0J7N9	PER TEK DRAWING
A18W32	196-3094-00			LEAD,ELECTRICAL:26 AWG,2.6 L,9-N	0J7N9	PER TEK DRAWING
A18W2201	131-0566-00			BUS,CONDUCTOR:DUMMY RES,0.094 OD X 0.225L	24546	OMA 07

Replaceable Electrical Parts
2246 1Y and 2246 MOD A Service

Component Number	Tektronix Part No.	Serial No. Effective	Dscont	Name & Description	Mfr. Code	Mfr. Part No.
B25	119-2063-00	B700100	B710985	FAN,TUBEAXIAL:12V,130MA,19.4 CFM (2246 1Y)	61529	A1F891003
B25	119-3564-00	B710986		FAN,TUBEAXIAL:12VDC,2.6W,3200RPM,36CFM (2246 1Y)	TK0IH	MD1208PTS1
B25	119-2063-00	B100100	B111718	FAN,TUBEAXIAL:12V,130MA,19.4 CFM (2246 MOD A,2Y)	61529	A1F891003
B25	119-3564-00	B111719		FAN,TUBEAXIAL:12VDC,2.6W,3200RPM,36CFM (2246 MOD A,2Y)	TK0IH	MD1208PTS1
DL21	119-2118-01			DELAY LINE,ELEC:2246,W/STRAIN RELIEF	80009	119211801
F2201	159-0023-00			FUSE,CARTRIDGE:3AG,2A,250V,SLOW BLOW,	71400	MDX2
FL2201	119-2055-00			FILTER,RFI:3A,115-230V,48-440HZ	S4307	FN322-3/05
J16	131-0955-00			CONN,RF JACK:BNC,:50 OHM,FEMALE,STR,SLDR CUP/FRONT PNL,GOLD,0.520 MLG X 0.490 TAIL, 0.092 L SLDR CUP,0.375-32/D/1 FLAT	24931	28JR200-1
V1	154-0905-00			ELECTRON TUBE:CRT	80009	154090500
W30	195-3990-00			LEAD,ELECTRICAL:18 AWG,4.5 L,5-4	TK0032	ORDER BY DESC

DIAGRAMS AND CIRCUIT BOARD ILLUSTRATIONS

Symbols

Graphic symbols and class designation letters are based on ANSI Standard Y32.2-1975.

Logic symbology is based on ANSI/IEEE 91-1984. Logic symbols depict the logic function performed and may differ from the manufacturer's data.

The overline on a signal name indicates that the signal performs its intended function when it is in the LO state.

Abbreviations are based on ANSI Y1.1-1972.

Other ANSI standards that are used in the preparation of diagrams by Tektronix, Inc., are:

Y14.15-1966	Drafting Practices.
Y14.2M-1979	Line Conventions and Lettering.
ANSI/IEEE 280-1985	Letter Symbols for Quantities Used in Electrical Science and Electrical Engineering.

American National Standards Institute
1430 Broadway
New York, New York 10018

Component Values

Electrical components shown on the diagrams are in the following units unless noted otherwise:

Capacitors	Values one or greater are in picofarads (pF). Values less than one are in microfarads (μF).
Resistors	Ohms (Ω).

The information and special symbols below may appear in this manual.

Assembly Numbers and Grid Coordinates

Each assembly in the instrument is assigned an assembly number (e.g., A20). The assembly number appears on the circuit board outline on the diagram, in the title for the circuit board component location illustration, and in the lookup table for the schematic diagram and corresponding component locator illustration. The Replaceable Electrical Parts list is arranged by assemblies in numerical sequence; the components are listed by component number *(see following illustration for constructing a component number).

The schematic diagram and circuit board component location illustration have grids. A lookup table with the grid coordinates is provided for ease of locating the component. Only the components illustrated on the facing diagram are listed in the lookup table. When more than one schematic diagram is used to illustrate the circuitry on a circuit board, the circuit board illustration may only appear opposite the first diagram on which it was illustrated; the lookup table will list the diagram number of other diagrams that the circuitry of the circuit board appears on.

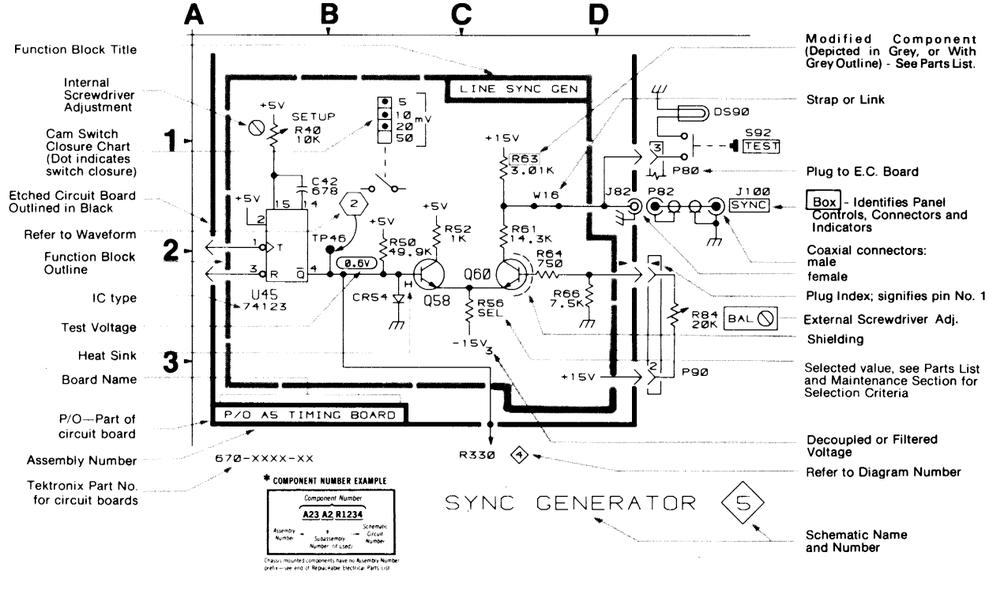

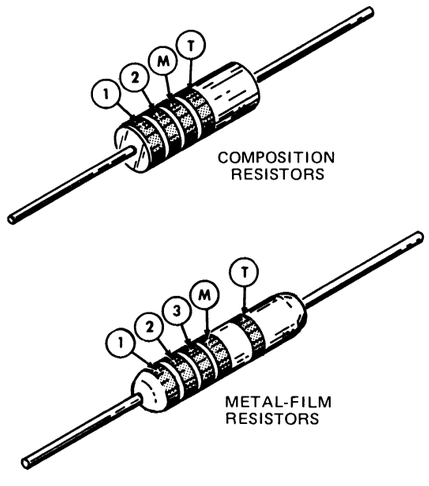

(1) (2) and (3) — 1st, 2nd, and 3rd significant figures
(M) —multiplier (T) —tolerance
(TC) —temperature coefficient
(P) —polarity and voltage rating

COLOR	SIGNIFICANT FIGURES	RESISTORS	
		MULTIPLIER	TOLERANCE
BLACK	0	1	---
BROWN	1	10	±1%
RED	2	10^2 or 100	±2%
ORANGE	3	10^3 or 1 K	±3%
YELLOW	4	10^4 or 10 K	±4%
GREEN	5	10^5 or 100 K	±½%
BLUE	6	10^6 or 1 M	±¼%
VIOLET	7	---	±1/10%
GRAY	8	---	---
WHITE	9	---	---
GOLD	—	10^{-1} or 0.1	±5%
SILVER	—	10^{-2} or 0.01	±10%
NONE	—	---	±20%

(1861-20A)6081-95

Figure 9-1. Color codes for resistors.

46 Mod A Service

TIONS

s.
and Lettering.
or Quantities
l Science
gineering.

s Institute

0018

he diagrams are in
ise:

in picofarads (pF).
in microfarads (μF).

anual.

t board component
okup table with the
ase of locating the
trated on the facing
e. When more than
trate the circuitry on
ustration may only
on which it was il-
diagram number of
f the circuit board

d Component
in Grey, or With
ne) · See Parts List.

ink

C Board

entifies Panel
, Connectors and

onnectors:

x, signifies pin No. 1
crewdriver Adj.

alue, see Parts List
enance Section for
Criteria

d or Filtered

Diagram Number

c Name
ber

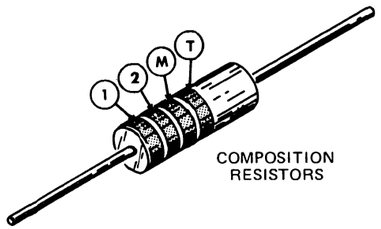

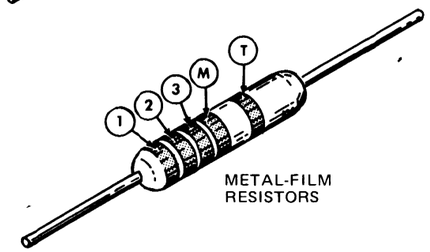

(1) (2) and (3) – 1st, 2nd, and 3rd significant figures
(M) –multiplier (T) –tolerance
(TC) –temperature coefficient
(P) –polarity and voltage rating

COLOR	SIGNIFICANT FIGURES	RESISTORS	
		MULTIPLIER	TOLERANCE
BLACK	0	1	---
BROWN	1	10	±1%
RED	2	10^2 or 100	±2%
ORANGE	3	10^3 or 1 K	±3%
YELLOW	4	10^4 or 10 K	±4%
GREEN	5	10^5 or 100 K	±½%
BLUE	6	10^6 or 1 M	±¼%
VIOLET	7	---	±1/10%
GRAY	8	---	---
WHITE	9	---	---
GOLD	–	10^{-1} or 0.1	±5%
SILVER	–	10^{-2} or 0.01	±10%
NONE	–	---	±20%

(1861-20A)6081-95

Figure 9-1. Color codes for resistors.

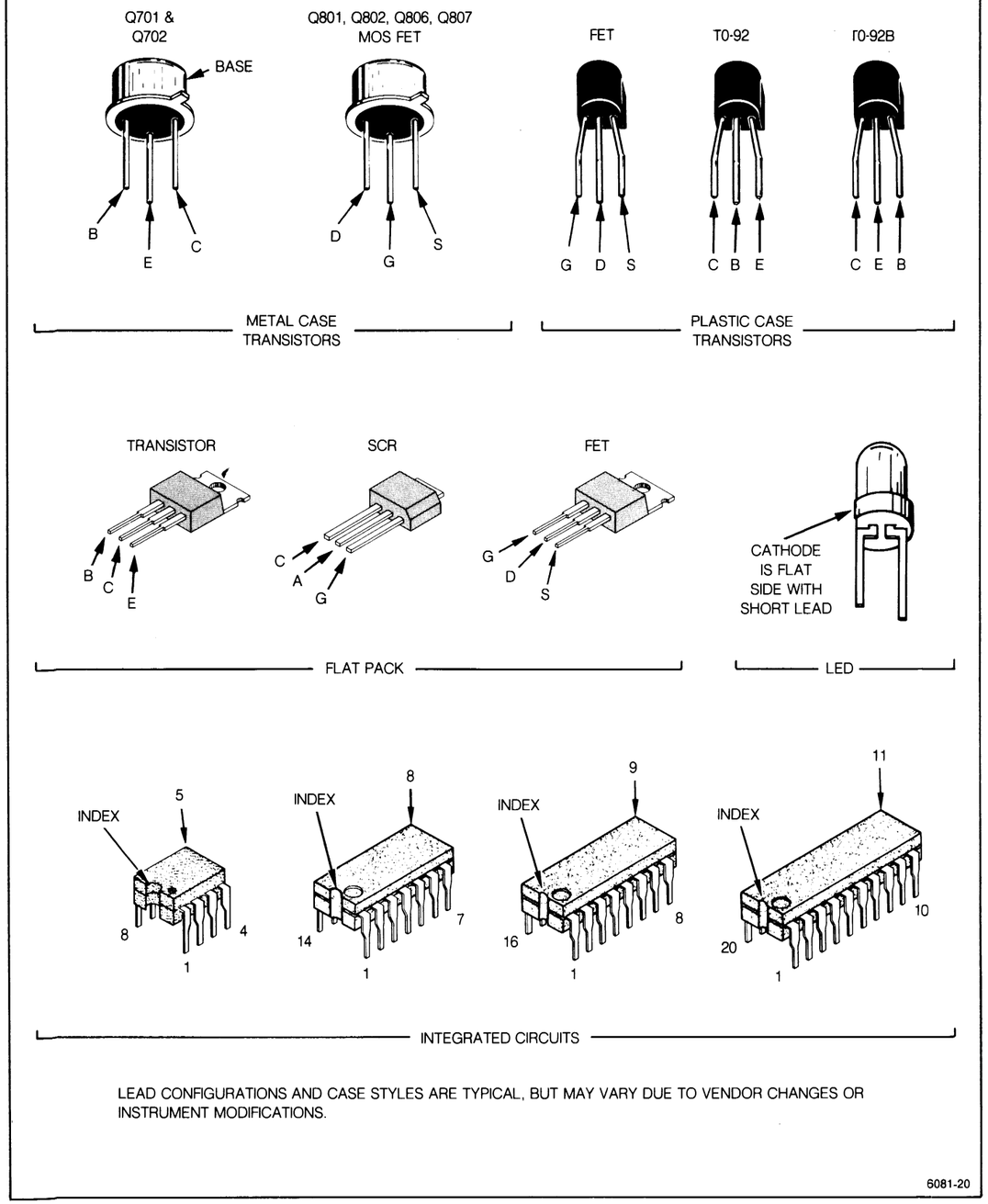

LEAD CONFIGURATIONS AND CASE STYLES ARE TYPICAL, BUT MAY VARY DUE TO VENDOR CHANGES OR INSTRUMENT MODIFICATIONS.

6081-20

Figure 9-2. Semiconductor lead configurations.

2246 1Y and 2246 Mod A Service

To identify any component mounted on a circuit board and to locate that component in the schematic diagram.

1. Locate the Circuit Board Illustration.

   a. Identify the Assembly Number of the circuit board that the component is on by using the Circuit Board location illustration in this section or the mechanical parts exploded views at the rear of this manual.

   b. In the manual, locate the tabbed foldout page that corresponds with the Assembly Number of the circuit board. The circuit board assembly numbers and names are printed on the back side of the tabs (facing the rear of the manual).

2. Determine the Circuit Number and Schematic Diagram.

   a. Compare the circuit board with its illustration. Locate the component you are looking for by area and shape on the illustration to determine its Circuit Number.

   b. Scan the lookup table next to the Circuit Board illustration to find the Circuit Number of the component.

   c. Read the SCHEM NUMBER column next to the component's circuit number to find the Schematic Diagram number.

3. Locate the Component on the Schematic Diagram.

   a. Locate the tabbed page that corresponds to the Schematic Diagram number. Schematic diagram numbers and names are printed on the front side of the tabs (facing the front of the manual).

   b. Locate the Assembly Number in the Component Location lookup table next to the schematic diagram. Scan the CIRCUIT NUMBER column of that table to find the Circuit Number of the component you are looking for in the schematic.

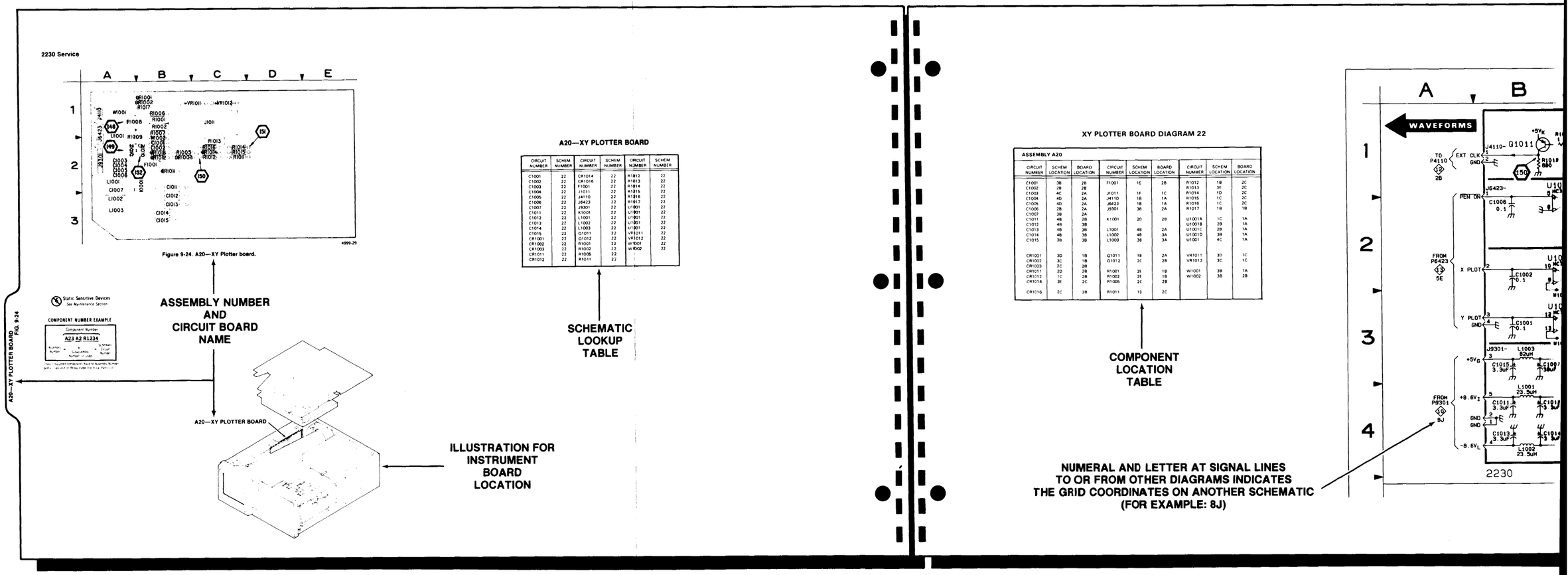

To identify any component in a schematic diagram and to locate that component on its respective circuit board.

1. Determine the Circuit Board Illustration and Component Location.

   a. From the schematic diagram, determine the Assembly Number of the circuit board that the component is on. The Assembly Number and Name is boxed and located in a corner of the heavy line marking the circuit board outline in the schematic diagram.

   b. Find the Component Location table for the Assembly Number found on the schematic. Scan the CIRCUIT NUMBER column to find the Circuit Number of the component.

   c. Look in the BOARD LOCATION column next to the component number and read its circuit board grid coordinates.

2. Locate the Component on the Circuit Board.

   a. In the manual, locate the tabbed page that corresponds to Assembly Number the component is on. Assembly numbers and names for circuit boards are on the back side of the tabs.

   b. Using the Circuit Number of the component and its given grid location, find the component in the Circuit Board illustration.

   c. From the small circuit board location illustration shown next to the circuit board, find the circuit board's location in the instrument.

   d. Find the circuit board in the instrument. Compare it with the circuit board illustration in the manual to locate the component on the circuit board itself.

Figure 9-3. Locating components on schematic diagrams and circuit board illustrations.

2. Determine the Circuit Number and Schematic Diagram.

   a. Compare the circuit board with its illustration. Locate the component you are looking for by area and shape on the illustration to determine its Circuit Number.

   b. Scan the lookup table next to the Circuit Board illustration to find the Circuit Number of the component.

   c. Read the SCHEM NUMBER column next to the component's circuit number to find the Schematic Diagram number.

3. Locate the Component on the Schematic Diagram.

   a. Locate the tabbed page that corresponds to the Schematic Diagram number. Schematic diagram numbers and names are printed on the front side of the tabs (facing the front of the manual).

   b. Locate the Assembly Number in the Component Location lookup table next to the schematic diagram. Scan the CIRCUIT NUMBER column of that table to find the Circuit Number of the component you are looking for in the schematic.

   c. In the SCHEM LOCATION column next to the component, read the grid coordinates of the component in the schematic.

   d. Using the grid coordinates given, find the component in the schematic diagram.

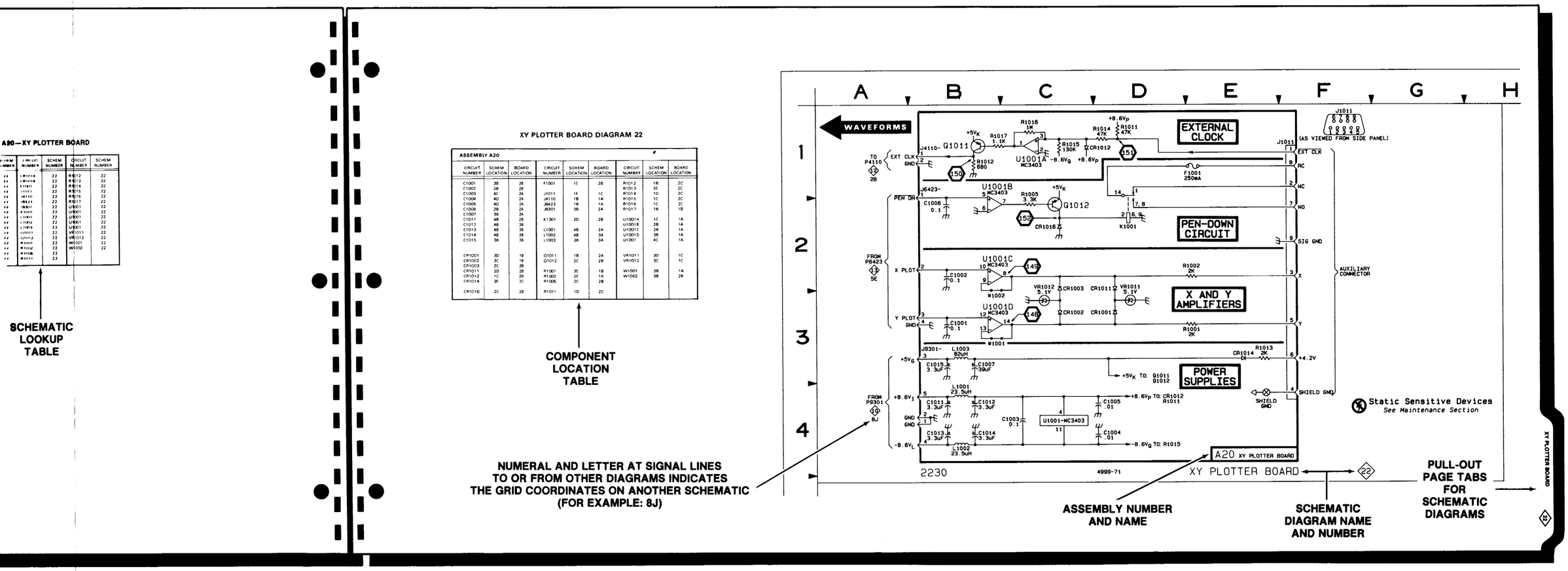

2. Locate the Component on the Circuit Board.

   a. In the manual, locate the tabbed page that corresponds to Assembly Number the component is on. Assembly numbers and names for circuit boards are on the back side of the tabs.

   b. Using the Circuit Number of the component and its given grid location, find the component in the Circuit Board illustration.

   c. From the small circuit board location illustration shown next to the circuit board, find the circuit board's location in the instrument.

   d. Find the circuit board in the instrument. Compare it with the circuit board illustration in the manual to locate the component on the circuit board itself.

Figure 9-3. Locating components on schematic diagrams and circuit board illustrations.

ZERO HYST TO 3
CH 1 OR X
CH 2
CH 3
CH 4
VOLT CAL FROM 7
VERTICAL INPUTS 1
CH 1 PREAMP IN +
CH 2 PREAMP IN +
CH 3 PREAMP IN +
CH 4 PREAMP IN +
CH 1-CH 4 GAIN CONTROL 6
CH 2 INVERT
SR DATA
SRO CLOCK
RO FREEZE
4 CH 1-CH 4 PROBE CODES TO 7
VERTICAL PREAMPS AND OUTPUT AMPLIFIER 2
+VERTICAL OUTPUT
-VERTICAL OUTPUT
PROCESSOR READABLE FRONT PANEL SWITCHES
SWITCH BOARD AND INTERFACE 10
FRONT PANEL SWITCH LEDS
LED CATH CLK
LED ANODE CLK
SW BD SR LOAD
SW BD SR SHIFT
SW BD DATA
DISPLAY AND TRIGGER LOGIC AND PROCESSOR INTERFACE 4
HD0-HD1 (HORIZ DISP CONT) 2
BEAM FIND
BW LIMIT
VERT COMP
RO VERT EN
CHANNEL & TRACE SEP ENABLES 5
RO VERT
RO POS ENABLES 5
TRACE SEP
CH1-CH2 VAR 2
CH1-4 POS 4
BW LIMIT
CH1-4 TR+ 4
VERT COMPEN
X-AXIS
HORIZONTAL OUTPUT AMPLIFIER 6
V1
HORIZ -
HORIZ +
L R
A TRIG CONTROL SIGNALS 4
B TRIG CONTROL SIGNALS 4
A TRIG
B TRIG/B TRIG 2
DLY SEL
SR1 CLOCK TTL
TRIG CLOCK
A AND B TRIGGER SYSTEM 3
MAG
X-Y
LINE TRIG FROM 12
AUX DATA
BEAM FIND
EXT Z-AXIS INPUT
BOTTOM
TOP
PROBE ADJUST
ZERO HYST FROM 1
TB CAL FROM 8
INTEN GATES 4
CLK 1K
SR1 CLOCK
A GATES 2
B GATES 2
DLY END 0
DLY END 1
A SWP END
B SWP END
SR DATA
A GATET
RO REQ
RO BLANK
A AND B SWEEPS, AND DELAY COMPARATORS 5
A RAMP
B RAMP
VOLT CAL0-2
TB CAL TO 3
ADDR0-ADDR3 BUS
MB RETURN
MB CNTL WR
MB DATA
FLIC WR
SLIC WR
SLIC RD
MEASUREMENT PROCESSOR 8
RO INTR
RO BUF WR
CLK 8M
RO BUF RD
SYS RESET
READOUT SYSTEM 9
RO VERT
REF & DELTA DLYS 2
RO HORIZ
REF & DELTA CURSORS 2
POT MUX CLK
DAC MSB CLK
DAC LSB CLK
AD COMP
ADC, DAC SYSTEM 11
HORIZ POS
TRACE SEP
CH1-CH2 VAR 2
CH1-4 POS 4
TIME VAR
TRIG LEVELS
POT5 - POT7 3
PROBE MUX
A INTEN, B INTEN, RO INTEN 3
Z-AXIS, CRT, PROBE ADJUST, AND CONTROL MUX 7
ASTIG
AUTO FOCUS
ANODE
INTENSITY
-2750 V
6.2 VAC AT -2750 V
POST-DEFLECTION ANODE +13.7 KV
130 VDC
130 VAC
AC INPUT
POWER SUPPLY 12
LINE TRIG TO 3
DC VOLTAGE TO ALL BLOCKS
CH1-CH4 PROBE CODES FROM 1
VOLT CAL TO 1
D0-D7 BUS
HOLDOFF
FRONT-PANEL POTS (EXCEPT A INTEN, B INTEN, READOUT)

7062-05

Figure 9-4. Simplified 2246 1Y or 2246 Mod A block diagram.

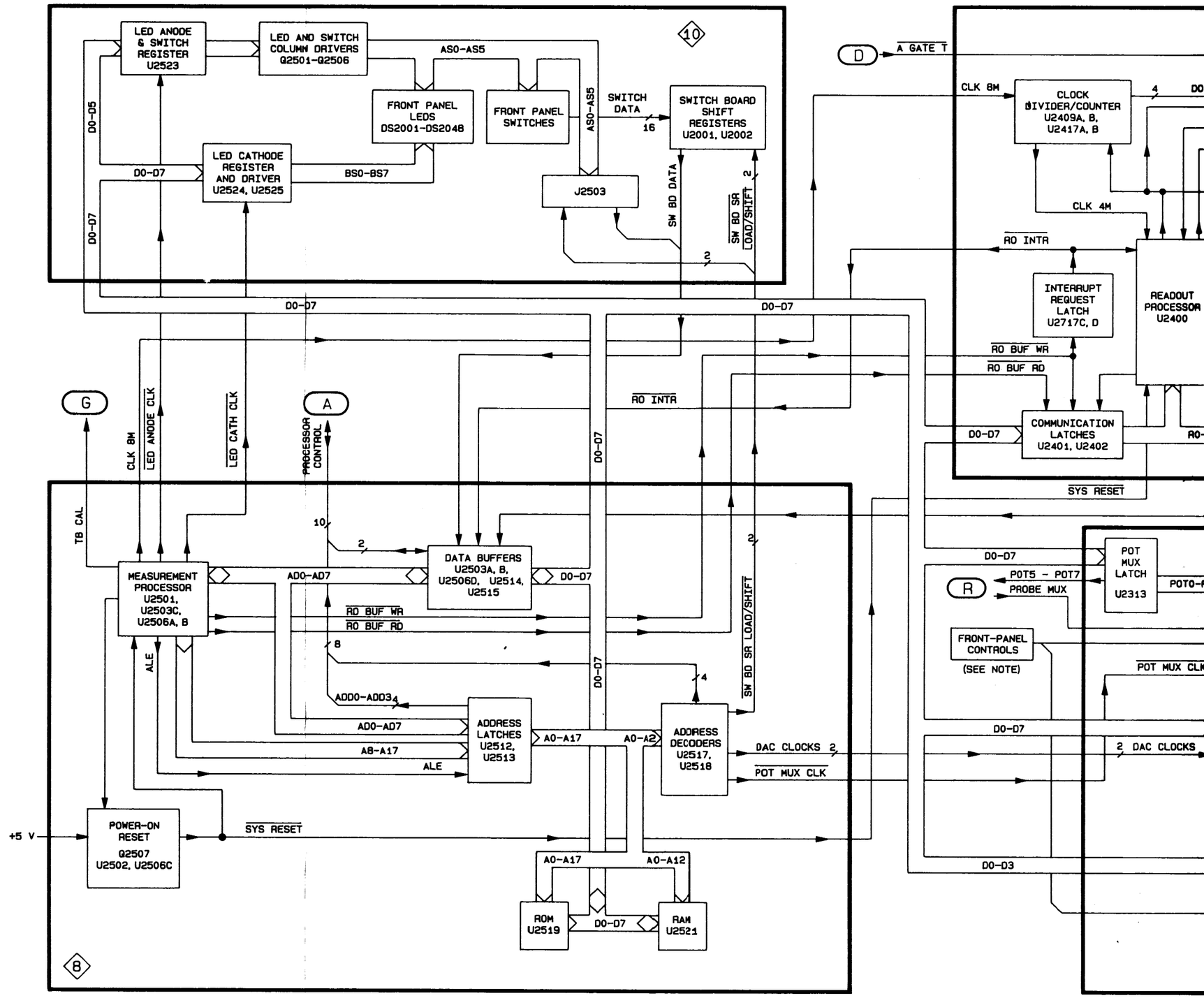

Figure 9-5b. Detailed 2246 1Y or 2246 Mod A block diagram—part 2.

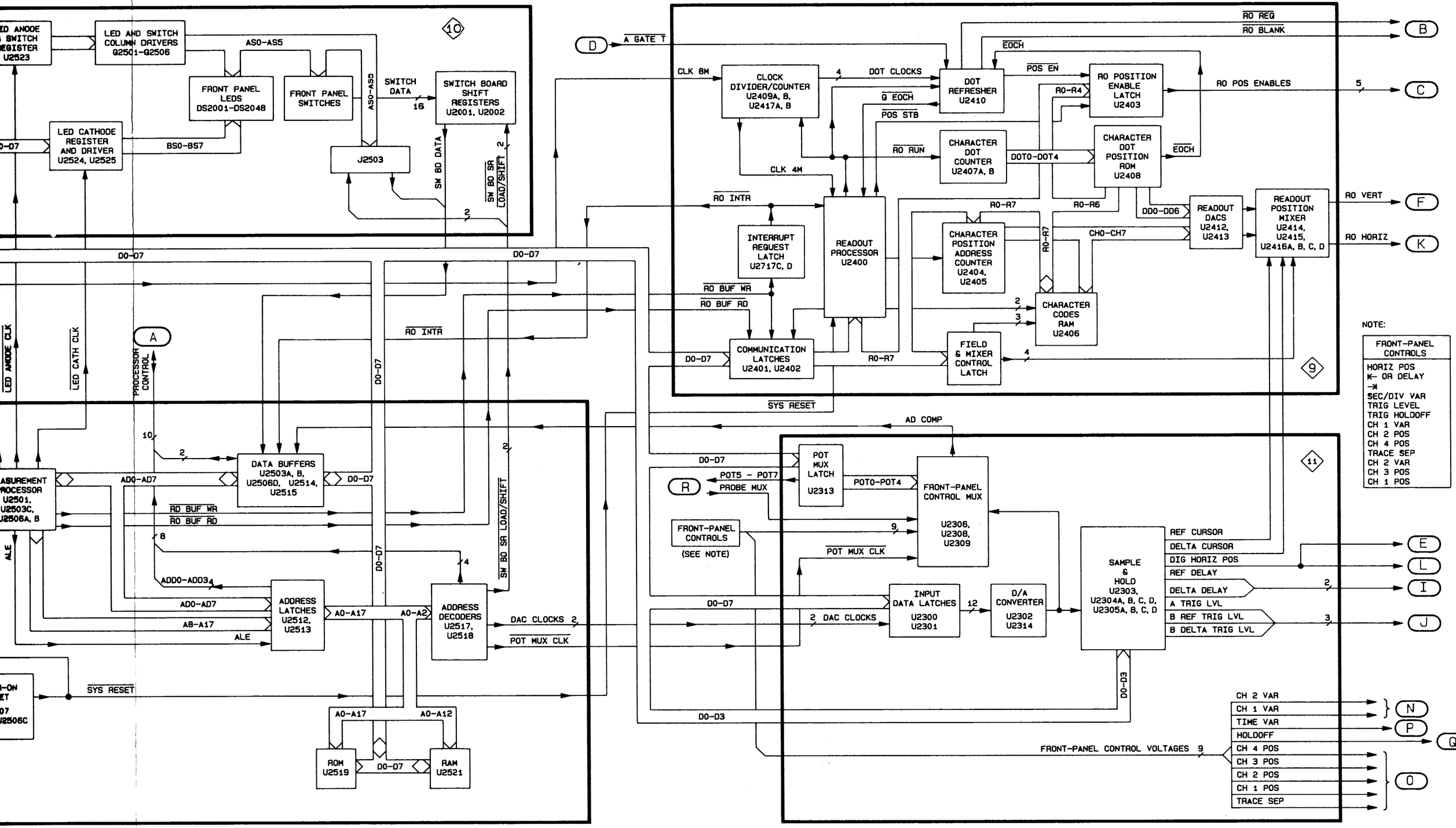

Figure 9-5b. Detailed 2246 1Y or 2246 Mod A block diagram—part 2.

7062-07

Table 9-1
SIGNAL LINE LOCATIONS

SIGNAL NAME	ORIGINATES[a] DIAG/CIR#(VIA)	GOES TO DIAG/CIR#(VIA)
A GATE	4/U603-11	5/VR302
$\overline{\text{A GATE}}$	4/U603-14	5/VR301
$\overline{\text{A GATE T}}$	4/Q604	9/U2410-9
A INTEN	11/U2312-14(R2357)	7/U1001-12
$\overline{\text{A INTEN GATE}}$	4/U602-17	7/Q1001
A RAMP	5/Q312,Q328	6/U802-3
A SLOPE	4/U600-30	3/U421-8(R493)
A SWP END	5/U316-15(R378)	4/U602-8
A TRIG	3/U421-10(R411)	4/U602-7
A TRIG LVL	11/U2304-8	3/U421-24(R448)
AD COMP	11/U2306-7	8/U2515-12(R2511)
ADDR0	8/U2512-15(R2560)	4/U501-1,U602-38(R619),U600-4
ADDR1	8/U2512-6(R2561)	4/U501-2,U602-39(R618),U600-5
ADDR2	8/U2512-16(R2562)	4/U501-3,U600-6
ADDR3	8/U2512-5(R2563)	4/U502-10,U600-7
ATS 0	4/U600-31	3/U421-13(R490)
ATS 1	4/U600-32	3/U421-12(R491)
ATS 2	4/U600-33	3/U421-9(R492)
AUX DATA	5/U303-9	3/U1103-2(R1162)
B DELTA TRIG LVL	11/U2305-1	3/U1106-5
B GATE	4/U603-9	5/VR304
$\overline{\text{B GATE}}$	4/U603-15	5/VR303
B INTEN	11/U2312-4(R2356)	7/U1001-5
$\overline{\text{B INTEN GATE}}$	4/U602-18	7/Q1004
B RAMP	5/Q325,Q329	6/U802-5
B REF TRIG LVL	11/U2304-7	3/U1106-3
B SLOPE	4/U600-26	3/U431-8(R497)
B SWP END	5/U316-2(R380)	4/U602-37
B TRIG	3/U431-10(R415)	4/U602-34(DL22+)
$\overline{\text{B TRIG}}$	3/U431-11(R416)	4/DL22-
BEAM FIND	4/U503-7	7/Q2706(R2705);2/U701-21;6/U802-14
BTS 0	4/U600-27	3/U431-13 (R494)
BTS 1	4/U600-28	3/U431-12(R495)
BTS 2	4/U600-29	3/U431-9(R496)
$\overline{\text{BW LIMIT}}$	3/U1103-11	4/U502-4;2/U701-22
CH 1 EN	4/U600-39	2/U210-11(R213)
CH 1 POS	11/U2310-14(R2354)	2/U203-3
CH 1 PRB	1/R105;C111	7/U506-15
CH 1 PREAMP 0	1/U172-4	2/U210-1(CR201)
CH 1 PREAMP 1	1/U171-11	2/U210-2(CR202)
CH 1 PREAMP IN +	1/U112-8	2/U210-7
CH 1 TR +	2/U210-20	3/U421-7,U431-7
CH 1 VAR	11/U2309-13(R2350)	2/U210-10(R225)
CH 2 EN	4/U600-38	2/U220-11 (R223)
CH 2 INVERT	1/U173-6	2/U220-12
CH 2 POS	11/U2310-4(R2353)	2/U203-5
CH 2 PRB	1/R106,C121	7/U506-12
CH 2 PREAMP 0	1/U173-5	2/U220-1

Table 9-1 (cont)

SIGNAL NAME	ORIGINATES[a] DIAG/CIR#(VIA)	GOES TO DIAG/CIR#(VIA)
CH 2 PREAMP 1	1/U173-4	2/U220-2
CH 2 PREAMP IN +	1/U122-8	2/U220-7
CH 2 TR +	2/U220-20	3/U421-5,U431-5
CH 2 VAR	11/U2309-5(R2351)	2/U220-10(R227)
CH 3 EN	4/U600-37	2/U230-11(R233)
CH 3 POS	11/U2311-4(R2327)	2/U203-10
CH 3 PRB	1/R107,C131	7/U506-1
CH 3 PREAMP 1	1/U173-7	2/U230-2
CH 3 PREAMP IN +	1/Q131A(R139),Q131B(R139)	2/U230-7
CH 3 TR +	2/U230-20	3/U421-3,U431-3
CH 4 EN	4/U600-36	2/U240-11(R243)
CH 4 POS	11/U2310-15(R2326)	2/U203-12
CH 4 PRB	1/R108,C151	7/U506-5
CH 4 PREAMP 1	1/U173-14	2/U240-2
CH 4 PREAMP IN +	1/Q151A(R159),Q151B(R159)	2/U240-7
CH 4 TR +	2/U240-20	3/U421-1,U431-1
CLK 1K	7/U930-7(R933,R934)	4/U600-2
CLK 4M	9/U2417-3	11/J2601-16
CLK 8M	8/U2501-56	9/U2409-1
$\overline{\text{DAC INTR}}$	11/R2310	8/U2515-16(R2554)
$\overline{\text{DAC LSB CLK}}$	8/U2517-15	11/U2301-11
$\overline{\text{DAC MSB CLK}}$	8/U2517-14	11/U2300-11
DATA BUS	8/U2514	9/U2401,U2402;10/U2523,U2524; 11/U2300,U2301,U2307,U2313
DELTA CURSOR	11/U2304-1	9/U2414-2,U2415-2
DELTA DELAY	11/U2305-7	5/U301-12(R330),U313-6(R330)
DIG HORIZ POS	11/U2305-14	6/U301-3(R369);2/U702-3(R722)
DLY END 0	5/U315-15(R388)	4/U602-36
DLY END 1	5/U315-2(R387)	4/U602-35
DLY SEL	4/U600-25	5/U301-11;3/U1106-9
$\overline{\text{FLIC WR}}$	8/U2518-11	4/U602-40(R647)
HD0	4/U600-24	6/U802-8
HD1	4/U600-23	6/U802-11
HOLDOFF	11/U2308-5(R2343)	4/Q600(R636)
+ HORIZONTAL OUTPUT	6/Q805(R819),Q806(R819)	7/V1-R
- HORIZONTAL OUTPUT	6/Q801(R802),Q802(R802)	7/V1-L
$\overline{\text{IZ INTEN GATE}}$	4/U602-19	7/Q1003
$\overline{\text{LED ANODE CLK}}$	8/U2501-27	10/U2523-11(R2528)
$\overline{\text{LED CATH CLK}}$	8/U2501-25	10/U2524-11(R2529)
LINE TRIG	12/T2206	3/U1106-2
MAG	3/U1103-6	6/U802-6
MAIN BD MUX	7/U506-3(R503)	11/U2309-12(R2352)
$\overline{\text{MB CNTL WR}}$	8/U2518-15(R2564)	4/U501-4
MB DATA	8/U2515-11(R2555)	4/U600-9,U602-12(R620),U502-2
MB RETURN	4/U502-12	8/U2515-14(R2509)
POT5	11/U2313-5	7/U506-11(R508)
POT6	11/U2313-19	7/U506-10(R510)
POT7	11/U2313-2	7/U506-9(R512)

SIGNAL NAME
$\overline{\text{POT MUX CLK}}$
REF CURSOR
REF DELAY
$\overline{\text{RO BLANK}}$
$\overline{\text{RO BUF RD}}$
$\overline{\text{RO BUF WR}}$
RO CH 1 POS E
RO CH 2 POS E
RO CH 3 POS E
RO CH 4 POS E
$\overline{\text{RO FREEZE}}$
RO HORIZ
RO INTEN
$\overline{\text{RO INTEN GATE}}$
$\overline{\text{RO INTR}}$
$\overline{\text{RO REQ}}$
RO TR SEP EN
RO VERT
RO VERT EN
$\overline{\text{SLIC RD}}$
$\overline{\text{SLIC WR}}$
$\overline{\text{SR0 CLK}}$
$\overline{\text{SR1 CLK}}$
SR1 CLK TTL
SR DATA
SW BD DATA
$\overline{\text{SW BD SR LOA}}$
$\overline{\text{SW BD SR SHIF}}$
$\overline{\text{SYS RESET}}$
TB CAL
TIME VAR
TRACE SEP
TRACE SEP EN
$\overline{\text{TRIG CLK}}$
VERT COMP
$\overline{\text{VERT COMP EN}}$
+ VERTICAL OU
- VERTICAL OU
VOLT CAL
VOLT CAL 0
VOLT CAL 1
VOLT CAL 2
$\overline{\text{X Y}}$
X AXIS
ZERO HYST

[a] Signals that be

TABLE 9-1

MORE

Table 9-1 (cont)

SIGNAL NAME	ORIGINATES[a] DIAG/CIR#(VIA)	GOES TO DIAG/CIR#(VIA)
CH 2 PREAMP 1	1/U173-4	2/U220-2
CH 2 PREAMP IN +	1/U122-8	2/U220-7
CH 2 TR +	2/U220-20	3/U421-5,U431-5
CH 2 VAR	11/U2309-5(R2351)	2/U220-10(R227)
CH 3 EN	4/U600-37	2/U230-11(R233)
CH 3 POS	11/U2311-4(R2327)	2/U203-10
CH 3 PRB	1/R107,C131	7/U506-1
CH 3 PREAMP 1	1/U173-7	2/U230-2
CH 3 PREAMP IN +	1/Q131A(R139),Q131B(R139)	2/U230-7
CH 3 TR +	2/U230-20	3/U421-3,U431-3
CH 4 EN	4/U600-36	2/U240-11(R243)
CH 4 POS	11/U2310-15(R2326)	2/U203-12
CH 4 PRB	1/R108,C151	7/U506-5
CH 4 PREAMP 1	1/U173-14	2/U240-2
CH 4 PREAMP IN +	1/Q151A(R159),Q151B(R159)	2/U240-7
CH 4 TR +	2/U240-20	3/U421-1,U431-1
CLK 1K	7/U930-7(R933,R934)	4/U600-2
CLK 4M	9/U2417-3	11/J2601-16
CLK 8M	8/U2501-56	9/U2409-1
DAC INTR	11/R2310	8/U2515-16(R2554)
DAC LSB CLK	8/U2517-15	11/U2301-11
DAC MSB CLK	8/U2517-14	11/U2300-11
DATA BUS	8/U2514	9/U2401,U2402;10/U2523,U2524; 11/U2300,U2301,U2307,U2313
DELTA CURSOR	11/U2304-1	9/U2414-2,U2415-2
DELTA DELAY	11/U2305-7	5/U301-12(R330),U313-6(R330)
DIG HORIZ POS	11/U2305-14	6/U301-3(R369);2/U702-3(R722)
DLY END 0	5/U315-15(R388)	4/U602-36
DLY END 1	5/U315-2(R387)	4/U602-35
DLY SEL	4/U600-25	5/U301-11;3/U1106-9
FLIC WR	8/U2518-11	4/U602-40(R647)
HD0	4/U600-24	6/U802-8
HD1	4/U600-23	6/U802-11
HOLDOFF	11/U2308-5(R2343)	4/Q600(R636)
+ HORIZONTAL OUTPUT	6/Q805(R819),Q806(R819)	7/V1-R
- HORIZONTAL OUTPUT	6/Q801(R802),Q802(R802)	7/V1-L
IZ INTEN GATE	4/U602-19	7/Q1003
LED ANODE CLK	8/U2501-27	10/U2523-11(R2528)
LED CATH CLK	8/U2501-25	10/U2524-11(R2529)
LINE TRIG	12/T2206	3/U1106-2
MAG	3/U1103-6	6/U802-6
MAIN BD MUX	7/U506-3(R503)	11/U2309-12(R2352)
MB CNTL WR	8/U2518-15(R2564)	4/U501-4
MB DATA	8/U2515-11(R2555)	4/U600-9,U602-12(R620),U502-2
MB RETURN	4/U502-12	8/U2515-14(R2509)
POT5	11/U2313-5	7/U506-11(R508)
POT6	11/U2313-19	7/U506-10(R510)
POT7	11/U2313-2	7/U506-9(R512)

Table 9-1 (cont)

SIGNAL NAME	ORIGINATES[a] DIAG/CIR#(VIA)	GOES TO DIAG/CIR#(VIA)
POT MUX CLK	8/U2517-13	11/U2313-11
REF CURSOR	11/U2304-14	9/U2414-5,U2415-5
REF DELAY	11/U2305-8	5/U301-13(R329)
RO BLANK	9/U2410-16(R2419)	4/U600-12
RO BUF RD	8/U2501-29(R2515)	9/U2402-1
RO BUF WR	8/U2501-28(R2516)	9/U2417-9,U2401-11
RO CH 1 POS EN	9/U2403-19	2/U202-10
RO CH 2 POS EN	9/U2403-2	2/U202-11
RO CH 3 POS EN	9/U2403-5	2/U201-9
RO CH 4 POS EN	9/U2403-6	2/U201-10
RO FREEZE	1/U173-11	4/U502-5,U503-3
RO HORIZ	9/U2416-8	6/U802-1 (R807,R823)
RO INTEN	11/U2312-15(R2355)	7/U1001-10
RO INTEN GATE	4/U602-20	7/Q1002
RO INTR	9/U2417-11	8/U2515-15(R2508)
RO REQ	9/U2410-14(R2420)	4/U503-2,U600-11
RO TR SEP EN	9/U2403-9	2/U201-11
RO VERT	9/U2416-14	2/U202-4(R207,R205)
RO VERT EN	4/U503-4	2/U202-9(R215)
SLIC RD	8/U2503-8	4/U600-8
SLIC WR	8/U2518-12	4/U600-3
SR0 CLK	4/U606-12	1/U171-3,U172-3,Q171,U173-3(R176)
SR1 CLK	4/U606-4	5/U302-3,U303-3
SR1 CLK TTL	4/U501-13	3/U1103-3
SR DATA	4/U606-6	U171-2;5/U302-2
SW BD DATA	10/U2002-9	8/U2515-13(R2510)
SW BD SR LOAD	8/U2518-14	10/U2001-1,U2002-1
SW BD SR SHIFT	8/U2518-13	10/U2001-2,U2002-2
SYS RESET	8/U2506-8	9/U2400-28
TB CAL	8/U2501-22	3/U1106-1(R1170)
TIME VAR	11/U2308-12(R2344)	5/U309-5(R309,CR301)
TRACE SEP	11/U2311-15(R2323)	2/U801-5
TRACE SEP EN	4/U600-22	2/U201-11(R209)
TRIG CLK	4/U600-19	3/U421-2(R498)
VERT COMP	2/U702-7	4/U502-6
VERT COMP EN	3/U1103-7	2/Q703
+ VERTICAL OUTPUT	2/Q701(R731,L703)	7/V1-TOP
- VERTICAL OUTPUT	2/Q702(R732,L704)	7/V1-BOT
VOLT CAL	7/U931-3	1/R114,R124
VOLT CAL 0	5/U303-11	7/U931-11(R924)
VOLT CAL 1	5/U303-12	7/U931-10(R923)
VOLT CAL 2	5/U303-13	7/U931-9(R922)
X Y	3/U1103-12	6/U301-9
X AXIS	3/U421-19(R426,L426)	6/U802-7(R836,R827)
ZERO HYST	1/U173-13	3/Q480(R484)

[a] Signals that begin and end on the same diagram are not listed in this table.

MORE

CH 1 OR X
CH 2
ZERO HYST
CH 3
CH 4
CH 1 INPUT COUPLING & ATTENUATORS AT117, U112
CH 2 INPUT COUPLING & ATTENUATORS AT127, U122
ATTENUATOR & GAIN CONTROL REGISTERS-SR0 U171-U175
CH 3 INPUT AMPLIFIER Q131A, B
CH 4 INPUT AMPLIFIER Q151A, B
CH 1 PREAMP IN+
CH 2 PREAMP IN+
ATTEN & CPLG CONTROL
SR DATA
SR0 CLK
CH 3 PREAMP IN+
CH 4 PREAMP IN+
VOLT CAL
CH 1 VAR
CH 2 VAR
GAIN
GAIN INVERT
CH 1-4 EN
CH 1 PREAMP U210
CH 2 PREAMP U220
CH 3 PREAMP U230
CH 4 PREAMP U240
CH 1 TR+
CH 2 TR+
CH 3 TR+
CH 4 TR+
CH 1-4 TR+
DELAY LINE DRIVER U260, Q250, Q251, Q252, Q253
DELAY LINE DL21
VERT OUTPUT AMPLIFIER U701, Q701, Q702
+VERTICAL OUTPUT
-VERTICAL OUTPUT
RO POS ENABLES 5
TRACE SEP EN
VERTICAL POSITION SWITCHING U201, U202, U203A, B, C, D, U280, U801B, Q284, Q285
VERTICAL COMPARATOR U702, Q703
RO VERT
DIG HORIZ POS
VERT COMP EN
CH 1-4 POS
TRACE SEP
BW LIMIT
BEAM FIND
LINE TRIG
TBCAL
SR1 CLOCK TTL
VERT COMP
RO VERT EN
SR DATA
CH 1-CH 4 PROBE CODES
BEAM FIND
X-AXIS
A TRIGGER SOURCE SELECTOR U421A
SELECTED A TRIGGER
A TRIGGER COUPLING SELECTOR U421B
A TRIGGER BW LIMIT U441E, F, Q440, Q444
A TRIGGER COMPARATOR U421C
TV TRIGGER DETECTOR U1101A, U1102A, B, U1104A, B, C, Q1101-Q1106
TV TRIG
A SLOPE
TV FIELD
A AUX DATA
TRIGGER SWITCHING LOGIC U421A (A), U431A (B), U1106A, U1103
X-Y
MAG
BW FULL B
B TV TRIG EN
B TRIGGER SOURCE SELECTOR U431A
SELECTED B TRIGGER
B TRIGGER COUPLING SELECTOR U431B, U1101B, U1106C
B TRIGGER BW LIMIT U441B, C, Q470, Q474
B TRIGGER COMPARATOR AND MEASUREMENT A/D CONVERTER U431C, U1106B, Q480
A TRIG LVL
B REF TRIG LVL
B DELTA TRIG LVL
DLY SEL
ZERO HYST
A & B TRIGGERS
AUX DATA
VOLT CAL 0-2
HD0, HD1
PROCESSOR CONTROL
PROCESSOR/INTERFACE U501, U502, U503, U606B, C, F
RO FREEZE
RO REQ
RO BLANK
SR1 CLOCK
MSEL
CH & TRACE SEP ENABLES
TRIGGER LOGIC U602, DL22
A & B TRIGGERS
INTENSITY GATES
DLY END 0-1
A, B SWP END
LEVEL SHIFTERS U603A, B, C, D, U604A, U605D, E, Q602-Q607
A & B GATES
A GATE T
DISPLAY LOGIC U600, Q608, Y600
CLK 1K
TRIGGER CLK & CONTROL
HOLDOFF OSCILLATOR U601, Q600, Q601
HOLDOFF
SWEEP CONTROL SHIFT REGISTERS U302, U303
SWEEP CONTROL LOGIC LINES
A SWEEP START Q308, Q309, Q311, Q326, Q333
A SWEEP TIMING U307, U308, U304A, Q307, Q330, Q328, Q305, Q306
TIMING DIVIDER R313A, B, C, D, Q301, U309B
A SWEEP BUFFER Q310A, B, Q312
A GATES
TIME VAR
BASELINE STABALIZER U309A, Q302, Q303, Q304, Q315, Q316, Q317
+2.5 V REF
A RAMP
B RAMP
B SWEEP TIMING U304B, U310, U311, Q320, Q331, Q318, Q329
B SWEEP BUFFER Q323A, B, Q325
B SWEEP START Q313, Q321, Q322, Q332
B GATES
DELAY-TIME SWITCHING U301A, C
DELAY-TIME COMPARATOR U313, U315A, C
DLY END 0-1
REF DELAY
DELTA DELAY
SWEEP-END COMPARATORS U316A, B, C, D
A, B SWP END
POWER
AC INPUT AND PRIMARY POWER RECTIFIER FL2201, RT2201, VR2204, F2201, CR2231, CR2232, CR2233, CR2234
STARTUP CIRCUIT Q2204, Q2211
S2202
THERMAL CUTOUT
PREREGULATOR CIRCUITS Q2201, T2203, Q2202, Q2203, U2201, Q2208, Q2206, VR220
LINE
+44

Figure 9-5a. Detailed 2246 1Y or 2246 Mod A block diagram—part 1.

DELAY LINE DRIVER U260, Q250, Q251, Q252, Q253
DELAY LINE DL21
VERT OUTPUT AMPLIFIER U701, Q701, Q702
+VERTICAL OUTPUT
-VERTICAL OUTPUT
CH 1-4 TR+
DIG HORIZ POS
VERTICAL POSITION SWITCHING U201, U202, U203A, B, C, D, U280, U8018, Q284, Q285
VERTICAL COMPARATOR U702, Q703
VERT COMP EN
RO VERT
CH 1-4 POS
TRACE SEP
BW LIMIT
BEAM FIND
LINE TRIG
TBCAL
BR DATA
VERT COMP
SR1 CLOCK TTL
X-AXIS
A TRIGGER SOURCE SELECTOR U421A
SELECTED A TRIGGER
A TRIGGER COUPLING SELECTOR U421B
A TRIGGER BW LIMIT U441E, F, Q440, Q444
A TRIGGER COMPARATOR U421C
A SLOPE
TV FIELD
A AUX DATA
TV TRIGGER DETECTOR U1101A, U1102A, B, U1104A, B, C, Q1101-Q1106
TV TRIG
TRIGGER SWITCHING LOGIC U421A (A), U431A (B), U1105A, U1103
BW FULL B
B TV TRIG EN
X-Y
MAG
A TRIG LVL
B REF TRIG LVL
B DELTA TRIG LVL
B TRIGGER SOURCE SELECTOR U431A
SELECTED B TRIGGER
B TRIGGER COUPLING SELECTOR U431B, U1101B, U1106C
B TRIGGER BW LIMIT U441B, C, Q470, Q474
B TRIGGER COMPARATOR AND MEASUREMENT A/D CONVERTER U431C, U1106B, Q480
ZERO HYST
DLY SEL
A & B TRIGGERS
AUX DATA
VOLT CAL 0-2
SWEEP CONTROL SHIFT REGISTERS U302, U303
SWEEP CONTROL LOGIC LINES
A SWEEP TIMING U307, U308, U304A, Q307, Q330, Q328, Q305, Q306
DELAY-TIME SWITCHING U301A, C
DELAY-TIME COMMPARATOR U313, U315A, C
DLY END 0-1
A SWEEP START Q308, Q309, Q311, Q326, Q333
A GATES
TIME VAR
TIMING DIVIDER R313A, B, C, D, Q301, U3098
A SWEEP BUFFER Q310A, B, Q312
REF DELAY
DELTA DELAY
A RAMP
B RAMP
BASELINE STABALIZER U309A, Q302, Q303, Q304, Q315, Q316, Q317
+2.5 V REF
B SWEEP TIMING U304B, U310, U311, Q320, Q331, Q318, Q329
B SWEEP BUFFER Q323A, B, Q325
SWEEP-END COMPARATORS U316A, B, C, D
A, B SWP END
B SWEEP START Q313, Q321, Q322, Q332
B GATES
HDO, HDI
RO HORIZ
SCALE ILLUM
PROBE ADJUST
SCALE ILLUMINATION Q905, Q907, Q908
PROBE ADJUST U930A, B
CLK 1K
+2.5 V
+2.5 V
VOLT CAL
VOLTS CAL SIGNAL SOURCE U931, R921
VOLT CAL 0-2
MAIN BD MUX
POT5 - POT7
CONTROL MULTIPLEXER U506
HORIZ -
HORIZ +
A INTEN
B INTEN
READOUT
BOTTOM
TOP
BEAM FIND
XY
MAG
DIG HORIZ POS
A RAMP
B RAMP
HDO, HDI
RO HORIZ
HORIZONTAL PREAMP U301B, U802
COMMON-MODE STABILIZER U801A
HORIZONTAL OUTPUT AMPLIFIERS Q801, Q802, Q805, Q806
DRIVER AMPLIFIERS Q803, Q804, Q807, Q808, Q809, Q810
A INTEN
B INTEN
RO INTEN
Z-AXIS FOCUS DRIVER U1001B, C, D, Q1001, Q1002, Q1003, Q1004, Q1005
Z-AXIS & AUTO FOCUS AMPLIFIERS Q2701-Q2709, Q2711, Q2712, Q2713, Q2715, DS2701-4
AUTO FOCUS
ANODE
INTENSITY
-2750 V
POWER
INTENSITY GATES
EXT Z-AXIS
LINE TRIG
AC INPUT AND PRIMARY POWER RECTIFIER FL2201, RT2201, VR2204, F2201, CR2231, CR2232, CR2233, CR2234
+44 V
STARTUP CIRCUIT Q2204, Q2211
S2202
THERMAL CUTOUT
PREREGULATOR CIRCUITS Q2201, T2203, Q2202, Q2203, U2201, Q2208, Q2206, VR2201
INVERTER CONTROL CIRCUIT Q2212, Q2213
INVERTER POWER SWITCHING Q2209, Q2210, Q2214
T2204
130 VAC
130V DC
LOW VOLTAGE SECONDARY SUPPLIES
LOW VOLTAGES TO ALL CIRCUITS
HIGH VOLTAGE POWER SUPPLY U2230
+13.7 KV

Figure 9-5a. Detailed 2246 1Y or 2246 Mod A block diagram—part 1.

(6557-93)7062-06

VOLTAGE/WAVEFORM SETUP CONDITIONS

WAVEFORMS

Test waveforms are shown on a page just before the schematic diagram to which they apply. Normal control settings for the test oscilloscope are given in the readouts shown in each waveform illustration. Unless otherwise indicated near the waveform, setup conditions for the oscilloscope under test are as follows:

1. Set up the 2246 1Y or 2246 Mod A front-panel controls as follows:

VERTICAL MODE	CH 1 (other channels off)
CH 1 COUPLING	DC
CH 1 VOLTS/DIV	0.1 V
VERTICAL POSITION Controls	12 o'clock
SCOPE BW	On
HORIZONTAL MODE	A
A/B SELECT	A
SEC/DIV	0.1 ms
Trigger LEVEL	12 o'clock
HOLDOFF	min (CCW)
SLOPE	⌐
Trigger MODE	AUTO LEVEL
Trigger SOURCE	VERT
Trigger COUPLING	DC
MEASUREMENTS	OFF
MENU Displays	OFF
A INTEN	10 o'clock
READOUT	12 o'clock
FOCUS	for well defined display
SCALE ILLUM	fully CCW

2. Connect the front panel PROBE ADJUST output to the channel 1 input connector.

3. For all waveforms, except those obtained from the Low-Voltage Power Supply, connect the test oscilloscope probe ground wire to the chassis. When obtaining waveforms from the power supply, first connect the power cord of the 2246 1Y or 2246 Mod A under test through an isolation transformer, then connect probe ground wire to ground "P" (rear side of R2256). See Figure 9-12 to locate ground "P".

WARNING

To avoid electric shock and instrument damage, always connect the power cord of the instrument under test through an isolation transformer when viewing waveforms or measuring voltages in the low-voltage power supply.

DC VOLTAGES

Dc voltages shown the schematic diagrams are typical of a normally operating instrument. Voltages are referenced to chassis ground, except in the isolated portion of the Low Voltage Power Supply where they are referenced to ground "P" (at R2256 as shown in Figure 9-12). Make sure that the DMM leads are floating (isolated from chassis ground) when measuring voltages in this section.

TEST EQUIPMENT

The following test equipment is recommended for obtaining waveforms and voltages from the 2246 1Y and 2246 Mod A Oscilloscopes. Other similar equipment types can also be used.

1. Test Oscilloscope with 10X probe(s)—TEKTRONIX 2246 1Y or 2246 Mod A.

2. Digital Voltmeter—TEKTRONIX DM 501A.

3. Power-Line Isolation Transformer—Tektronix Part No. 006-5953-00.

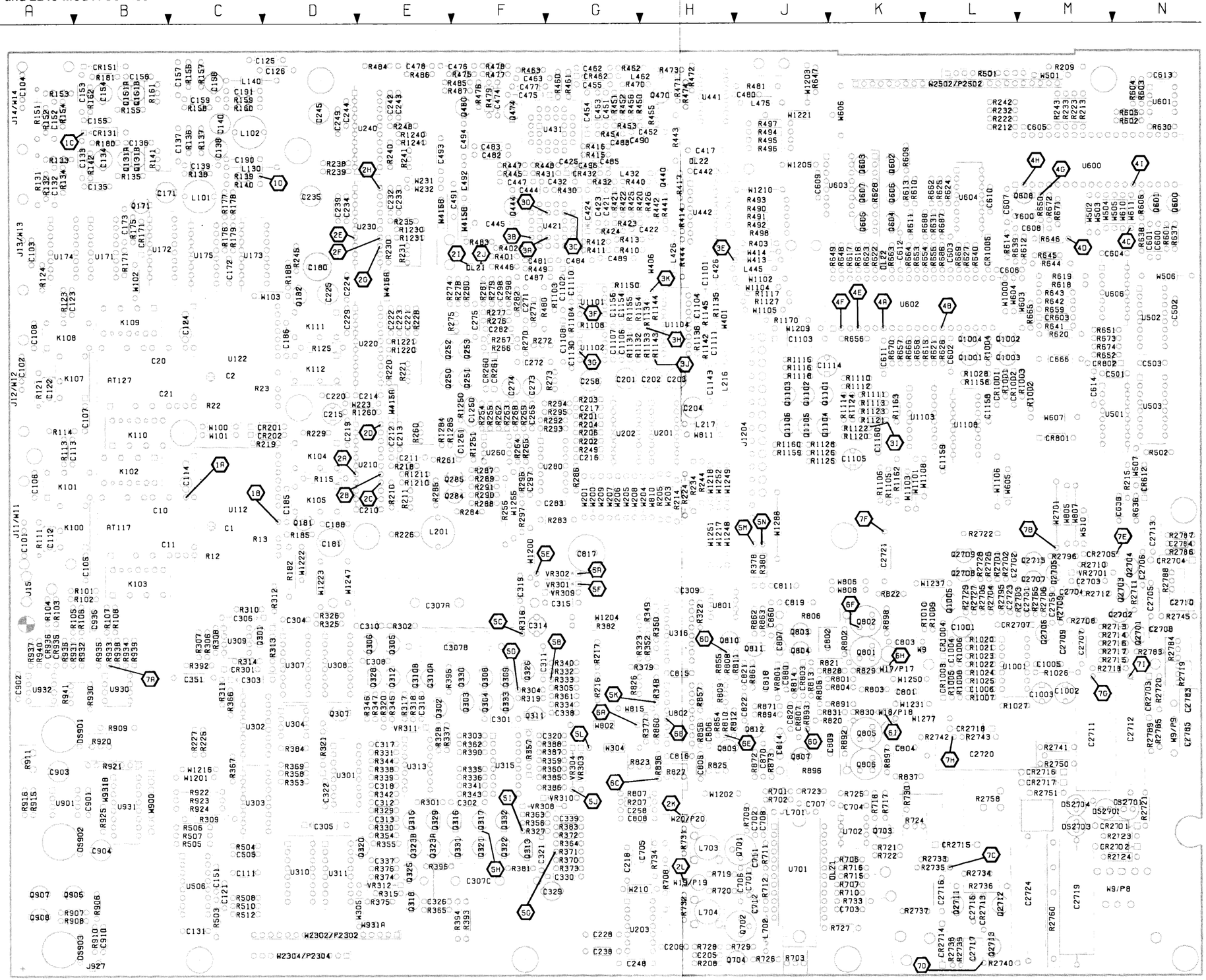

Figure 9-6a. A10—Main board for SN B715000 and above (2246 1Y), and B120000 and above (2246 MOD A).

Static Sensitive Devices
See Maintenance Section

COMPONENT NUMBER EXAMPLE

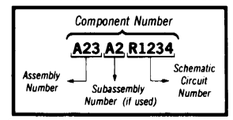

Chassis-mounted components have no Assembly Number prefix—see end of Replaceable Electrical Parts List.

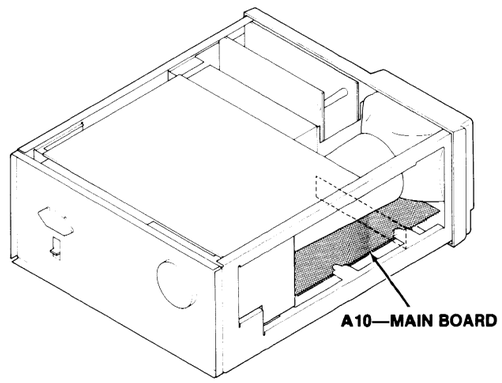

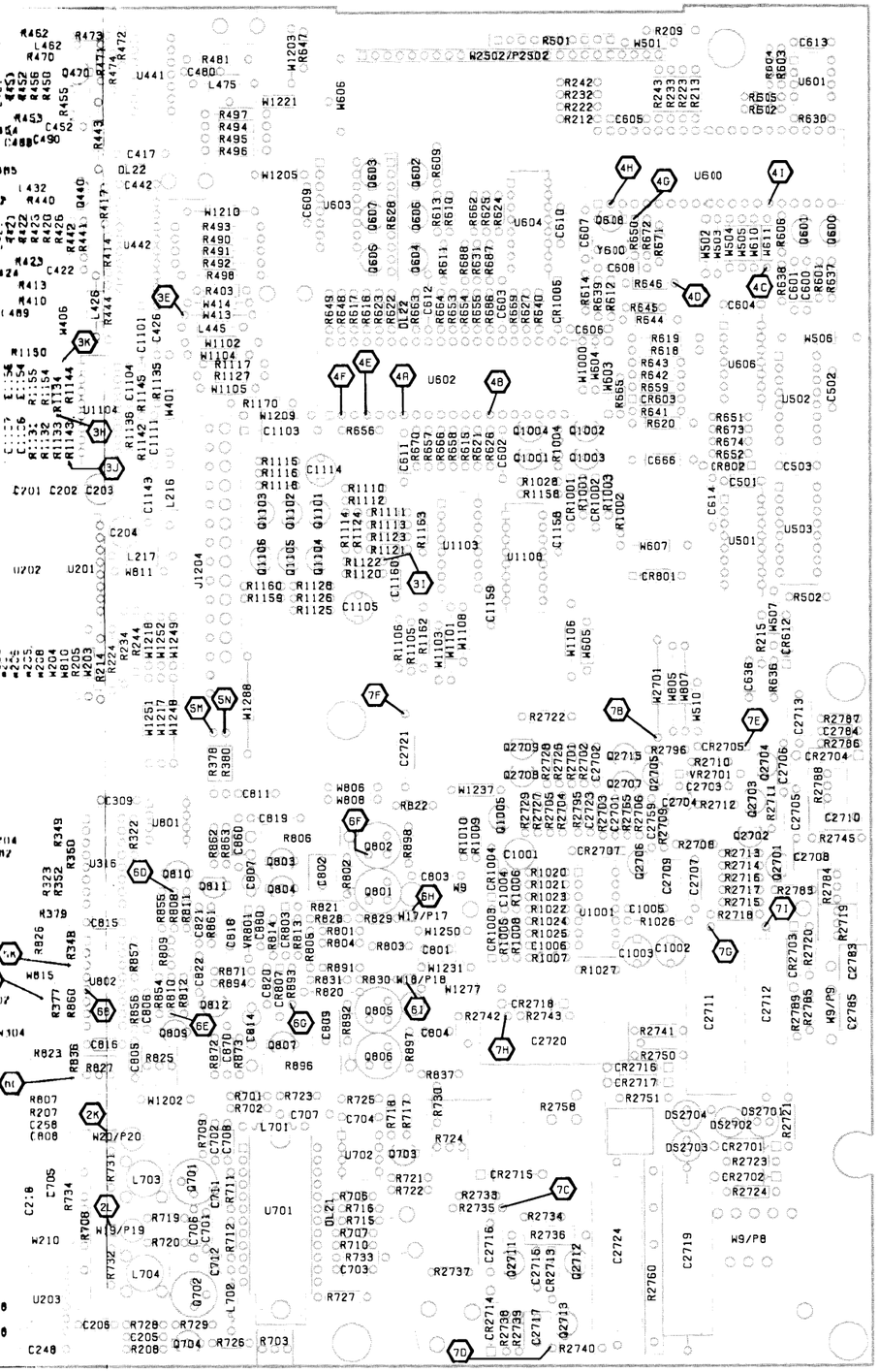

Static Sensitive Devices
See Maintenance Section

COMPONENT NUMBER EXAMPLE

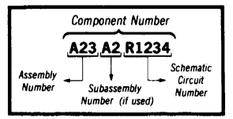

Chassis-mounted components have no Assembly Number prefix—see end of Replaceable Electrical Parts List.

OTHER PARTS

CIRCUIT NUMBER	SCHEM NUMBER	CIRCUIT NUMBER	SCHEM NUMBER	CIRCUIT NUMBER	SCHEM NUMBER
B25	12	J16	7	P26	7
		J2726	12	P27	7
FL2201	12				
		P25	12	V1	7

8 1Y), and B120000 and above (2246 MOD A).

ADD JUN 1991

A10 – MAIN BOARD
(SN B715000 AND ABOVE, 2246 1Y
SN B120000 AND ABOVE, 2246 MOD A)

CIRCUIT NUMBER	SCHEM NUMBER	BOARD LOCATION	CIRCUIT NUMBER	SCHEM NUMBER	BOARD LOCATION	CIRCUIT NUMBER	SCHEM NUMBER	BOARD LOCATION	CIRCUIT NUMBER	SCHEM NUMBER	BOARD LOCATION
AT117	1	6B	C223	2	4E	C455	3	1G	C880	6	8J
AT127	1	4B	C224	13	3D	C462	3	1G	C901	13	9B
			C225	13	3D	C463	3	1F	C902	13	8A
C1	1	6C	C228	2	10G	C474	3	1F	C903	13	9A
C2	1	4C	C229	13	4D	C475	13	1F	C904	13	9B
C10	1	6B	C232	2	2E	C476	3	1E	C910	7	10B
C11	1	6B	C233	2	2E	C477	3	1F	C935	7	7B
C20	1	4B	C234	13	3D	C478	3	1E	C1001	7	7L
C21	1	5B	C235	13	2D	C480	13	1J	C1002	7	8M
C101	1	6A	C238	2	10G	C481	13	3F	C1003	7	8M
C102	1	4A	C239	13	3D	C482	13	2F	C1004	7	7L
C103	1	3A	C242	2	1E	C483	3	2F	C1005	13	7M
C104	1	1A	C243	2	1E	C484	3	3G	C1006	13	8L
C105	1	6B	C244	13	2D	C485	3	2G	C1101	13	3H
C106	1	6A	C245	13	2D	C487	3	3F	C1102	13	3G
C107	1	5B	C248	2	11G	C488	3	2G	C1103	3	4J
C108	1	4A	C249	13	2D	C489	3	3G	C1104	13	4H
C111	1	10C	C258	2	4G	C491	2	2F	C1105	3	5K
C112	1	6A	C265	13	5F	C492	2	2F	C1106	3	4G
C113	1	5A	C268	2	9G	C493	2	2E	C1107	3	4G
C114	1	5C	C271	2	4F	C494	2	2F	C1108	13	4G
C121	1	10C	C272	2	4F	C496	3	2G	C1110	3	3G
C122	1	5A	C273	2	4F	C501	13	4M	C1111	3	4H
C123	1	4A	C274	2	4F	C502	13	4N	C1114	3	4J
C124	1	4C	C275	2	4F	C503	13	4N	C1130	3	4G
C125	1	1C	C282	13	4F	C505	13	9C	C1143	3	4H
C126	1	1D	C283	13	6F	C600	4	3N	C1154	3	4G
C131	1	10C	C297	13	6F	C601	4	3N	C1155	3	4G
C132	1	2A	C298	13	3F	C602	4	4L	C1158	13	5L
C133	1	2B	C301	5	8F	C603	4	3L	C1159	13	5L
C134	1	2B	C302	5	9F	C604	13	3M	C1160	13	5K
C135	13	2B	C303	5	8C	C605	13	2M	C1250	2	5F
C136	13	2B	C304	13	7D	C606	13	3L	C1251	2	5F
C137	1	2C	C305	5	9D	C607	4	3L	C2701	13	7M
C138	1	2C	C306	5	7C	C608	4	3M	C2702	13	6L
C139	2	2C	C307A	5	7E	C609	13	2J	C2703	7	7M
C140	13	2C	C307B	5	7E	C610	13	2L	C2704	7	7M
C151	1	10C	C307C	5	10F	C611	4	4K	C2705	7	7N
C152	1	2A	C308	5	7E	C612	4	3K	C2706	7	6N
C153	1	1B	C309	13	7H	C613	13	1N	C2707	7	7M
C154	1	1B	C310	5	7E	C614	4	5M	C2708	7	7N
C155	13	2B	C311	5	7F	C636	4	6N	C2709	13	7M
C156	13	1B	C312	5	9E	C666	4	4M	C2710	7	7N
C157	1	1C	C313	5	9E	C701	13	10J	C2711	7	8M
C158	1	1C	C314	5	7F	C702	13	9J	C2712	7	8N
C159	2	1C	C315	5	7G	C703	13	10K	C2713	7	6N
C171	13	2B	C316	13	8E	C704	13	9K	C2715	7	10L
C172	13	3C	C317	13	8E	C705	13	9H	C2716	7	10L
C173	1	3B	C318	13	9E	C706	2	10J	C2717	7	11L
C180	13	3D	C319	6	7F	C707	2	9J	C2719	7	10M
C181	13	6D	C320	13	8F	C708	13	9J	C2720	7	8L
C185	1	6D	C321	5	10F	C711	2	10J	C2721	7	6K
C186	1	4D	C322	13	9D	C712	2	10J	C2723	7	7L
C188	1	6D	C326	5	10E	C801	13	8K	C2724	7	10M
C190	1	2C	C329	5	10F	C802	6	7J	C2759	7	7M
C191	1	1C	C330	5	10G	C803	6	7K	C2783	7	8N
C201	2	4G	C337	13	10E	C804	6	8K	C2784	7	6N
C202	2	4H	C338	13	8G	C805	6	9H	C2785	7	8N
C203	2	4H	C339	13	9G	C806	13	8H			
C204	2	5H	C351	13	8C	C807	6	7J	CR131	1	2B
C205	13	11H	C421	3	3G	C808	6	9G	CR151	1	1B
C206	13	10H	C422	3	3G	C809	6	8K	CR171	1	3B
C210	2	6E	C423	3	3G	C811	2	7J	CR201	2	5C
C211	2	5E	C424	3	3G	C814	6	8J	CR202	2	5C
C212	2	5E	C425	3	2G	C815	13	7H	CR260	2	4F
C213	2	5E	C426	3	3H	C816	13	8H	CR261	2	4F
C214	13	5E	C432	3	2G	C817	6	6G	CR262	2	4F
C215	13	5D	C442	13	2H	C818	13	8J	CR263	2	4F
C216	13	5G	C444	3	2F	C819	6	7J	CR301	5	7C
C217	13	5G	C445	13	3F	C820	6	8J	CR432	3	2G
C218	2	10G	C447	3	2F	C821	13	8J	CR462	3	1G
C219	13	5D	C451	3	2G	C822	13	8J	CR603	4	4M
C220	2	5D	C452	3	2G	C860	6	7J	CR612	4	6N
C221	2	4E	C453	3	2G	C870	6	8J	CR801	6	5M
C222	2	4E	C454	3	2G						

A10 – MAIN BOARD (cont)
(SN B715000 AND ABOVE, 2246 1Y
SN B120000 AND ABOVE, 2246 MOD A)

CIRCUIT NUMBER	SCHEM NUMBER	BOARD LOCATION	CIRCUIT NUMBER	SCHEM NUMBER	BOARD LOCATION	CIRCUIT NUMBER	SCHEM NUMBER	BOARD LOCATION	CIRCUIT NUMBER	SCHEM NUMBER	BOARD LOCATION
CR802	6	4M	P9	7	8N	Q802	6	7K	R156	1	1C
CR803	6	8J	P9	7	9N	Q803	6	7J	R157	1	1C
CR807	6	8J	P17	6	7K	Q804	6	7J	R158	2	1C
CR935	7	7A	P18	6	8K	Q805	6	8K	R159	1	1C
CR936	7	7A	P19	2	10H	Q806	6	8K	R160	2	1C
CR1001	7	5L	P20	2	9H	Q807	6	8J	R161	1	1B
CR1002	7	5L	P2302	13	10D	Q809	6	8H	R162	1	1B
CR1003	7	8L	P2302	7	10D	Q810	6	7H	R171	1	3B
CR1004	7	7L	P2304	7	11D	Q811	6	7J	R175	1	3B
CR1005	7	3L	P2502	13	1L	Q812	6	8J	R176	1	3C
CR2701	7	9M	P2502	4	1L	Q905	7	10A	R177	1	3C
CR2702	7	9M				Q907	7	10A	R178	1	3C
CR2703	7	8N	Q131A	1	2B	Q908	7	10A	R179	1	3C
CR2704	7	6N	Q131B	1	2B	Q1001	7	4L	R180	1	2B
CR2705	7	6M	Q151A	1	1B	Q1002	7	4L	R181	1	1B
CR2707	7	7L	Q151B	1	1B	Q1003	7	4L	R182	13	6D
CR2713	7	10L	Q171	1	2B	Q1004	7	4L	R185	1	6D
CR2714	7	11L	Q181	1	6D	Q1005	7	7L	R188	1	3D
CR2715	7	9L	Q182	1	4D	Q1101	3	5J	R201	2	5G
CR2716	7	9M	Q250	2	4E	Q1102	3	5J	R202	2	5G
CR2717	7	9M	Q251	2	4F	Q1103	3	5J	R203	2	5G
CR2718	7	8L	Q252	2	4E	Q1104	3	5J	R204	2	5G
			Q253	2	4F	Q1105	3	5J	R205	2	6H
DL21	2	3F	Q284	2	6E	Q1106	3	5J	R206	2	5G
DL21	2	10K	Q285	2	5E	Q2701	7	7N	R207	2	9G
DL22	3	2H	Q301	5	7C	Q2702	7	7M	R208	13	11H
DL22	3	3K	Q302	5	8E	Q2703	7	7N	R209	2	1M
			Q303	5	8F	Q2704	7	6N	R210	2	6E
DS901	7	8B	Q304	5	8F	Q2705	7	7M	R211	2	6E
DS902	7	9B	Q305	5	7E	Q2706	7	7M	R212	2	2L
DS903	7	11B	Q306	5	7E	Q2707	7	6M	R213	2	2M
DS2701	7	9N	Q307	5	8D	Q2708	7	6L	R214	2	6H
DS2702	7	9M	Q308	5	8F	Q2709	7	6L	R215	2	6N
DS2703	7	9M	Q309	5	8F	Q2711	7	10L	R216	2	8G
DS2704	7	9M	Q310A	5	8E	Q2712	7	10L	R217	2	7G
			Q310B	5	8E	Q2713	7	11L	R218	2	5E
J11	1	6A	Q311	5	8F	Q2715	7	6M	R219	2	5C
J12	1	5A	Q312	5	8E				R220	2	4E
J13	1	3A	Q313	5	9F	R12	1	6C	R221	2	4E
J14	1	1A	Q315	5	9E	R13	1	6C	R222	2	2L
J15	7	7A	Q316	5	9F	R22	1	5C	R223	2	2M
J927	7	11B	Q317	5	9F	R23	1	4C	R224	2	6H
J1204	13	5J	Q318	5	10E	R101	1	7A	R225	2	8C
			Q320	5	9E	R102	1	7A	R226	13	6E
K100	1	6A	Q321	5	9F	R103	1	7A	R227	2	8C
K101	1	5A	Q322	5	9F	R104	1	7A	R228	2	4E
K102	1	5B	Q323A	5	9E	R105	1	7A	R229	2	5D
K103	1	7B	Q323B	5	9E	R106	1	7B	R230	2	3E
K104	1	5D	Q325	5	10E	R107	1	7B	R231	2	3E
K105	1	6D	Q326	5	8F	R108	1	7B	R232	2	1L
K107	1	4A	Q328	5	8E	R111	1	6A	R233	2	2M
K108	1	4A	Q329	5	9E	R113	1	5A	R234	2	6H
K109	1	4B	Q330	5	8F	R114	1	5A	R235	2	3E
K110	1	5B	Q331	5	9F	R115	2	5D	R238	2	2D
K111	1	4D	Q332	5	9F	R121	1	5A	R240	2	2E
K112	1	4D	Q333	5	8F	R123	1	4A	R241	2	2E
			Q440	3	2H	R124	1	3A	R242	2	1L
L101	13	2C	Q444	3	3F	R125	2	4D	R243	2	2M
L102	13	2C	Q470	3	1H	R131	1	2A	R244	2	6H
L130	1	2C	Q474	3	2F	R132	1	2A	R245	13	3D
L140	1	1C	Q480	3	1F	R133	1	2A	R248	2	2E
L201	13	6E	Q600	4	3N	R134	1	2A	R249	2	5G
L216	13	4H	Q601	4	3N	R135	1	2B	R254	2	5F
L217	13	5H	Q602	4	2K	R136	1	2C	R255	2	5F
L426	3	3H	Q603	4	2K	R137	1	2C	R256	2	6F
L432	3	2G	Q604	4	3K	R138	2	2C	R260	2	5E
L445	13	3J	Q605	4	3K	R139	1	2C	R261	2	5E
L462	3	1G	Q606	4	2K	R140	2	2C	R262	2	5F
L475	13	1J	Q607	4	2K	R141	1	2B	R263	2	5F
L701	2	9J	Q608	4	2L	R142	1	2B	R264	2	5F
L702	2	10J	Q701	2	9J	R151	1	2A	R265	2	5F
L703	2	9H	Q702	2	10J	R152	1	2A	R266	2	4F
L704	2	10H	Q703	2	9K	R153	1	1A	R267	2	4F
			Q704	2	11H	R154	1	2A	R268	2	5F
P8	7	10N	Q801	6	7K	R155	1	1B	R269	2	5F

SCHEM NUMBER	BOARD LOCATION
6	8J
13	9B
13	8A
13	9A
13	9B
7	10B
7	7B
7	7L
7	8M
7	8M
7	7L
13	7M
13	8L
13	3H
13	3G
3	4J
13	4H
3	5K
3	4G
3	4G
13	4G
3	3G
3	4H
3	4J
3	4G
3	4H
3	4G
3	4G
13	5L
13	5L
13	5K
2	5F
2	5F
13	7M
13	6L
7	7M
7	7M
7	7N
7	6N
7	7M
7	7N
13	7M
7	7N
7	8M
7	8N
7	6N
7	10L
7	10L
7	11L
7	10M
7	8L
7	6K
7	7L
7	10M
7	7M
7	8N
7	6N
7	8N
1	2B
1	1B
1	3B
2	5C
2	5C
2	4F
2	4F
2	4F
2	4F
5	7C
3	2G
3	1G
4	4M
4	6N
6	5M

A10—MAIN BOARD (cont)
(SN B715000 AND ABOVE, 2246 1Y
SN B120000 AND ABOVE, 2246 MOD A)

CIRCUIT NUMBER	SCHEM NUMBER	BOARD LOCATION	CIRCUIT NUMBER	SCHEM NUMBER	BOARD LOCATION	CIRCUIT NUMBER	SCHEM NUMBER	BOARD LOCATION	CIRCUIT NUMBER	SCHEM NUMBER	BOARD LOCATION
CR802	6	4M	P9	7	8N	Q802	6	7K	R156	1	1C
CR803	6	8J	P9	7	9N	Q803	6	7J	R157	1	1C
CR807	6	8J	P17	6	7K	Q804	6	7J	R158	2	1C
CR935	7	7A	P18	6	8K	Q805	6	8K	R159	1	1C
CR936	7	7A	P19	2	10H	Q806	6	8K	R160	2	1C
CR1001	7	5L	P20	2	9H	Q807	6	8J	R161	1	1B
CR1002	7	5L	P2302	13	10D	Q809	6	8H	R162	1	1B
CR1003	7	8L	P2302	7	10D	Q810	6	7H	R171	1	3B
CR1004	7	7L	P2304	7	11D	Q811	6	7J	R175	1	3B
CR1005	7	3L	P2502	13	1L	Q812	6	8J	R176	1	3C
CR2701	7	9M	P2502	4	1L	Q905	7	10A	R177	1	3C
CR2702	7	9M				Q907	7	10A	R178	1	3C
CR2703	7	8N	Q131A	1	2B	Q908	7	10A	R179	1	3C
CR2704	7	6N	Q131B	1	2B	Q1001	7	4L	R180	1	2B
CR2705	7	6M	Q151A	1	1B	Q1002	7	4L	R181	1	1B
CR2707	7	7L	Q151B	1	1B	Q1003	7	4L	R182	13	6D
CR2713	7	10L	Q171	1	2B	Q1004	7	4L	R185	1	6D
CR2714	7	11L	Q181	1	6D	Q1005	7	7L	R188	1	3D
CR2715	7	9L	Q182	1	4D	Q1101	3	5J	R201	2	5G
CR2716	7	9M	Q250	2	4E	Q1102	3	5J	R202	2	5G
CR2717	7	9M	Q251	2	4F	Q1103	3	5J	R203	2	5G
CR2718	7	8L	Q252	2	4E	Q1104	3	5J	R204	2	5G
			Q253	2	4F	Q1105	3	5J	R205	2	6H
DL21	2	3F	Q284	2	6E	Q1106	3	5J	R206	2	5G
DL21	2	10K	Q285	2	5E	Q2701	7	7N	R207	2	9G
DL22	3	2H	Q301	5	7C	Q2702	7	7M	R208	13	11H
DL22	3	3K	Q302	5	8E	Q2703	7	7N	R209	2	1M
			Q303	5	8F	Q2704	7	6N	R210	2	6E
DS901	7	8B	Q304	5	8F	Q2705	7	7M	R211	2	6E
DS902	7	9B	Q305	5	7E	Q2706	7	7M	R212	2	2L
DS903	7	11B	Q306	5	7E	Q2707	7	6M	R213	2	2M
DS2701	7	9N	Q307	5	8D	Q2708	7	6L	R214	2	6H
DS2702	7	9M	Q308	5	8F	Q2709	7	6L	R215	2	6N
DS2703	7	9M	Q309	5	8F	Q2711	7	10L	R216	2	8G
DS2704	7	9M	Q310A	5	8E	Q2712	7	10L	R217	2	7G
			Q310B	5	8E	Q2713	7	11L	R218	2	5E
J11	1	6A	Q311	5	8F	Q2715	7	6M	R219	2	5C
J12	1	5A	Q312	5	8E				R220	2	4E
J13	1	3A	Q313	5	9F	R12	1	6C	R221	2	4E
J14	1	1A	Q315	5	9E	R13	1	6C	R222	2	2L
J15	7	7A	Q316	5	9F	R22	1	5C	R223	2	2M
J927	7	11B	Q317	5	9F	R23	1	4C	R224	2	6H
J1204	13	5J	Q318	5	10E	R101	1	7A	R225	2	8C
			Q320	5	9E	R102	1	7A	R226	13	6E
K100	1	6A	Q321	5	9F	R103	1	7A	R227	2	8C
K101	1	5A	Q322	5	9F	R104	1	7A	R228	2	4E
K102	1	5B	Q323A	5	9E	R105	1	7A	R229	2	5D
K103	1	7B	Q323B	5	9E	R106	1	7B	R230	2	3E
K104	1	5D	Q325	5	10E	R107	1	7B	R231	2	3E
K105	1	6D	Q326	5	8F	R108	1	7B	R232	2	1L
K107	1	4A	Q328	5	8E	R111	1	6A	R233	2	2M
K108	1	4A	Q329	5	9E	R113	1	5A	R234	2	6H
K109	1	4B	Q330	5	8F	R114	1	5A	R235	2	3E
K110	1	5B	Q331	5	9F	R115	2	5D	R238	2	2D
K111	1	4D	Q332	5	9F	R121	1	5A	R240	2	2E
K112	1	4D	Q333	5	8F	R123	1	4A	R241	2	2E
			Q440	3	2H	R124	1	3A	R242	2	1L
L101	13	2C	Q444	3	3F	R125	2	4D	R243	2	2M
L102	13	2C	Q470	3	1H	R131	1	2A	R244	2	6H
L130	1	2C	Q474	3	2F	R132	1	2A	R245	13	3D
L140	1	1C	Q480	3	1F	R133	1	2A	R248	2	2E
L201	13	6E	Q600	4	3N	R134	1	2A	R249	2	5G
L216	13	4H	Q601	4	3N	R135	1	2B	R254	2	5F
L217	13	5H	Q602	4	2K	R136	1	2C	R255	2	5F
L426	3	3H	Q603	4	2K	R137	1	2C	R256	2	6F
L432	3	2G	Q604	4	3K	R138	2	2C	R260	2	5E
L445	13	3J	Q605	4	3K	R139	1	2C	R261	2	5E
L462	3	1G	Q606	4	2K	R140	2	2C	R262	2	5F
L475	13	1J	Q607	4	2K	R141	1	2B	R263	2	5F
L701	2	9J	Q608	4	2L	R142	1	2B	R264	2	5F
L702	2	10J	Q701	2	9J	R151	1	2A	R265	2	5F
L703	2	9H	Q702	2	10J	R152	1	2A	R266	2	4F
L704	2	10H	Q703	2	9K	R153	1	1A	R267	2	4F
			Q704	2	11H	R154	1	2A	R268	2	5F
P8	7	10N	Q801	6	7K	R155	1	1B	R269	2	5F

A10—MAIN BOARD (cont)
(SN B715000 AND ABOVE, 2246 1Y
SN B120000 AND ABOVE, 2246 MOD A)

CIRCUIT NUMBER	SCHEM NUMBER	BOARD LOCATION	CIRCUIT NUMBER	SCHEM NUMBER	BOARD LOCATION	CIRCUIT NUMBER	SCHEM NUMBER	BOARD LOCATION	CIRCUIT NUMBER	SCHEM NUMBER	BOARD LOCATION
R270	2	4F	R347	5	8E	R448	3	2F	R628	4	2K
R271	2	4F	R348	5	8H	R449	3	3F	R630	4	2N
R272	2	4F	R349	5	7H	R450	3	1H	R631	4	3L
R273	2	4G	R350	5	7H	R451	3	1G	R636	4	6N
R274	2	3E	R352	5	7H	R452	3	1G	R637	4	3N
R275	2	4F	R353	5	9D	R453	3	2G	R638	4	3N
R276	2	4F	R354	5	9E	R454	3	2G	R639	4	3L
R277	2	4F	R355	5	9E	R455	3	2H	R640	4	3L
R278	2	3F	R356	5	9F	R456	3	1G	R641	4	4M
R279	2	3F	R357	5	8F	R460	3	1G	R642	4	4M
R280	2	3F	R358	6	9D	R461	3	1G	R643	4	3M
R281	2	3F	R359	5	8F	R462	3	1G	R644	4	3M
R282	13	4F	R360	5	9F	R463	3	1F	R645	4	3M
R283	13	6G	R361	5	8G	R470	3	1G	R646	4	3M
R284	2	6F	R362	5	8F	R471	3	1H	R647	4	1J
R285	2	6E	R363	5	9F	R472	3	1H	R648	4	3K
R286	2	5G	R364	5	9G	R473	3	1H	R649	4	3K
R287	2	5F	R365	5	10E	R474	3	1H	R650	4	3M
R288	2	6F	R366	5	8C	R475	3	1F	R651	4	4M
R289	2	5F	R367	5	9C	R476	3	1F	R652	4	4M
R290	2	6F	R369	6	8D	R477	3	1F	R653	4	3K
R291	2	5F	R370	5	9G	R478	3	1F	R654	4	3L
R292	2	5F	R371	5	9G	R479	3	1F	R655	4	3L
R293	2	5F	R372	5	9G	R480	13	4F	R656	4	4K
R294	2	5G	R373	5	10G	R481	13	1J	R657	4	4K
R295	2	5G	R374	13	10E	R483	3	3F	R658	4	4K
R296	2	6F	R375	5	10E	R484	3	1E	R659	4	4M
R297	13	6F	R376	5	10E	R485	3	1E	R662	4	2L
R298	13	3F	R377	5	8H	R486	3	1E	R663	4	3K
R299	2	4F	R378	5	6J	R487	3	1E	R664	4	3K
R301	5	9E	R379	5	7G	R490	3	3J	R665	4	4M
R302	5	7E	R380	5	6J	R491	3	3J	R666	4	4K
R303	5	8F	R381	5	10F	R492	3	3J	R669	4	3L
R304	5	8F	R382	5	7G	R493	3	2J	R670	4	4K
R305	5	8G	R383	5	9G	R494	3	2J	R671	4	3M
R306	5	7C	R384	5	8D	R495	3	2J	R672	4	3M
R307	5	7C	R385	5	9F	R496	3	2J	R673	4	4M
R308	5	7C	R386	5	9F	R497	3	2J	R674	4	4M
R309	5	9C	R387	5	8F	R498	3	3J	R701	13	9J
R310	5	7C	R388	5	8F	R501	4	1L	R702	2	9J
R311	5	8C	R390	13	8F	R502	4	5N	R703	2	11J
R312	13	7D	R392	13	7C	R503	7	10C	R706	2	9K
R313	5	7D	R393	5	10F	R504	13	9C	R707	2	10K
R314	5	7C	R394	5	10F	R505	7	9C	R708	2	10H
R315	5	10E	R395	5	8E	R506	7	9C	R709	13	9J
R316	5	7F	R396	5	10E	R507	7	9C	R710	2	10K
R317	5	8E	R401	3	3F	R508	7	10C	R711	2	10J
R318	5	8E	R402	3	3F	R510	7	10C	R712	2	10J
R319	5	8F	R403	3	3J	R512	7	10C	R715	2	10K
R320	5	8E	R410	3	3G	R601	4	3N	R716	2	10K
R321	5	8D	R411	3	3G	R602	4	2N	R717	2	9K
R322	5	7H	R412	3	3G	R603	4	1N	R718	2	9K
R323	5	7G	R413	3	3G	R604	4	1N	R719	2	10H
R325	5	7D	R414	3	3H	R605	4	1N	R720	2	10H
R326	5	7D	R415	3	2G	R606	4	3N	R721	2	9K
R327	5	9F	R416	3	2G	R609	4	2K	R722	2	9K
R328	5	8E	R417	3	2H	R610	4	2K	R723	13	9J
R329	5	9E	R420	3	3H	R611	4	3K	R724	2	9K
R330	5	9E	R421	3	3G	R612	4	3M	R725	2	9K
R331	5	8E	R422	3	3G	R613	4	2K	R726	2	11J
R332	5	7G	R423	3	3G	R614	4	3L	R727	2	10K
R333	5	8G	R424	3	3G	R615	4	4L	R728	2	10H
R334	5	8G	R425	3	3G	R616	4	3K	R729	2	10H
R335	5	9F	R426	3	3H	R617	4	3K	R730	2	9K
R336	5	9F	R430	3	2G	R618	4	3M	R731	2	9H
R337	5	8E	R431	3	2F	R619	4	3M	R732	2	10H
R338	5	9E	R432	3	2G	R620	4	4M	R733	13	10K
R339	13	9E	R440	3	2G	R621	4	4L	R734	13	10H
R340	5	7G	R441	3	3H	R622	4	3K	R801	6	8K
R341	5	9F	R442	3	3H	R623	4	3K	R802	6	7K
R342	5	9E	R443	3	2H	R624	4	2L	R803	6	8K
R343	5	9F	R444	3	3H	R625	4	2L	R804	6	8K
R344	5	8E	R445	3	2F	R626	4	4L	R805	6	8J
R345	13	8E	R446	3	3F	R627	4	3L	R806	6	7J
R346	5	8E	R447	3	2F						

A10—MAIN BOARD (cont)
(SN B715000 AND ABOVE, 2246 1Y
SN B120000 AND ABOVE, 2246 MOD A)

CIRCUIT NUMBER	SCHEM NUMBER	BOARD LOCATION	CIRCUIT NUMBER	SCHEM NUMBER	BOARD LOCATION	CIRCUIT NUMBER	SCHEM NUMBER	BOARD LOCATION	CIRCUIT NUMBER	SCHEM NUMBER	BOARD LOCATION
R807	6	9G	R1010	7	7L	R2711	7	7N	U260	13	5F
R808	6	7H	R1020	7	7L	R2712	7	7M	U280	2	5F
R809	6	8H	R1021	7	7L	R2713	7	7M	U301	5	9D
R810	6	8H	R1022	7	7L	R2714	7	7M	U301	6	9D
R811	6	7J	R1023	7	7L	R2715	7	7M	U302	5	8C
R812	6	8H	R1024	7	7L	R2716	7	7M	U302	13	8C
R813	6	8J	R1025	7	8L	R2717	7	7M	U303	5	9C
R814	6	8J	R1026	13	8M	R2718	7	7M	U303	13	9C
R820	6	8J	R1027	13	8L	R2719	7	8N	U304	5	8D
R821	6	7J	R1028	7	4L	R2720	7	8N	U304	13	8D
R822	6	7K	R1103	3	4G	R2721	7	9N	U307	5	7D
R823	6	8G	R1104	3	4G	R2722	7	6L	U307	13	7D
R825	6	8H	R1105	3	6K	R2723	7	9M	U308	5	7D
R826	6	8G	R1106	3	6K	R2724	7	9M	U308	13	7D
R827	6	9H	R1108	13	4G	R2726	7	6L	U309	5	7C
R828	6	7J	R1110	3	4K	R2727	7	7L	U309	13	7C
R829	6	7K	R1111	3	5K	R2728	7	6L	U310	5	10D
R830	6	8K	R1112	3	4K	R2729	7	7L	U310	13	10D
R831	6	8J	R1113	3	5K	R2733	7	9K	U311	5	10D
R836	6	9H	R1114	3	5K	R2734	7	10L	U311	13	10D
R837	13	9K	R1115	3	4J	R2735	7	10K	U313	5	8E
R854	6	8H	R1116	3	4J	R2736	7	10L	U315	5	8F
R855	6	7H	R1117	3	3J	R2737	7	10K	U315	13	8F
R856	6	8H	R1118	3	4J	R2738	7	11L	U316	5	7H
R857	6	8H	R1120	3	5K	R2739	7	11L	U316	13	7H
R860	6	8H	R1121	3	5K	R2740	7	11L	U421	3	3F
R861	6	8J	R1122	3	5K	R2741	7	8M	U421	13	3F
R862	6	7J	R1123	3	5K	R2742	7	8L	U431	3	2F
R863	6	7J	R1124	3	5K	R2743	7	8L	U431	13	2F
R871	6	8J	R1125	3	5J	R2745	7	7N	U441	3	1H
R872	6	9J	R1126	3	5J	R2750	7	8M	U441	13	1H
R873	6	9J	R1127	3	4J	R2751	7	9M	U442	3	3H
R891	6	8K	R1128	3	5J	R2758	7	9L	U442	13	3H
R892	6	8K	R1131	3	4G	R2760	7	10M	U501	4	5M
R893	6	8J	R1132	3	4G	R2765	7	7M	U501	13	5M
R894	6	8J	R1133	3	4H	R2783	13	7N	U502	4	4N
R896	6	9J	R1134	3	4H	R2784	7	7N	U502	13	4N
R897	6	8K	R1135	3	4H	R2785	7	8N	U503	4	5N
R898	6	7K	R1136	3	4H	R2786	7	6N	U503	13	5N
R906	7	10B	R1142	3	4H	R2787	7	6N	U506	7	10C
R907	7	10A	R1143	3	4H	R2788	7	7N	U506	13	10C
R908	7	10A	R1144	3	4H	R2789	7	8N	U600	4	2M
R909	7	8B	R1145	3	4H	R2795	7	7L	U600	13	2M
R910	7	10B	R1150	3	3G	R2796	7	6M	U601	4	1N
R911	7	8A	R1154	3	4G				U601	13	1N
R915	13	9A	R1155	3	4G	RT201	2	4F	U602	4	4K
R916	13	9A	R1158	13	4L				U602	13	4K
R920	7	8B	R1159	13	5J	U112	1	6C	U603	4	2K
R921	7	8B	R1160	13	5J	U112	13	6C	U603	13	2K
R922	7	9C	R1162	3	6K	U122	1	4C	U604	4	2L
R923	7	9C	R1163	3	5K	U122	13	4C	U604	13	2L
R924	7	9C	R1170	3	4J	U171	1	3B	U606	4	3M
R925	7	9B	R1210	2	5E	U171	13	3B	U606	13	3M
R930	7	8B	R1211	2	5E	U172	1	3B	U701	2	10J
R931	7	7A	R1220	2	4E	U172	13	3B	U701	13	10J
R932	7	7B	R1221	2	4E	U173	1	3C	U702	2	9K
R933	7	7B	R1230	2	3E	U173	13	3C	U702	13	9K
R934	7	7B	R1231	2	3E	U174	1	3A	U801	2	7H
R935	7	7B	R1240	2	2E	U175	1	3C	U801	6	7H
R936	7	7A	R1241	2	2E	U201	2	5H	U801	13	7H
R937	7	7A	R1250	2	5F	U201	13	5H	U802	6	8H
R938	7	7B	R1251	2	5F	U202	2	5G	U802	13	8H
R939	7	7B	R1260	13	5D	U202	13	5G	U901	13	9A
R940	7	7A	R1284	2	5E	U203	2	10G	U930	7	8B
R941	7	8A	R1285	2	5E	U203	13	10G	U930	13	8B
R1001	7	4L	R2701	7	6L	U210	2	5E	U931	7	9B
R1002	7	5M	R2702	7	6L	U210	13	5E	U931	13	9B
R1003	7	4M	R2703	7	7M	U220	2	4E	U932	13	8A
R1004	7	4L	R2704	7	7L	U220	13	4E	U1001	7	7L
R1005	7	8L	R2705	7	7L	U230	2	3E	U1001	13	7L
R1006	7	7L	R2706	7	7M	U230	13	3E	U1101	3	4G
R1007	7	8L	R2708	7	7M	U240	2	2E	U1101	7	4G
R1008	7	8L	R2709	7	7M	U240	13	2E	U1101	13	4G
R1009	7	7L	R2710	7	6M	U260	2	5F	U1102	3	4G

A10—MAIN BOARD (cont)
(SN B715000 AND ABOVE, 2246 1Y
SN B120000 AND ABOVE, 2246 MOD A)

CIRCUIT NUMBER	SCHEM NUMBER	BOARD LOCATION	CIRCUIT NUMBER	SCHEM NUMBER	BOARD LOCATION	CIRCUIT NUMBER	SCHEM NUMBER	BOARD LOCATION	CIRCUIT NUMBER	SCHEM NUMBER	BOARD LOCATION
U1102	13	4G	W100	1	5C	W505	4	3N	W1203	13	1J
U1103	3	5K	W101	1	5C	W506	4	3N	W1204	13	7G
U1103	13	5K	W102	1	3B	W507	4	5N	W1205	13	2J
U1104	3	4H	W103	13	3C	W510	4	6M	W1209	13	4J
U1104	13	4H	W200	2	6G	W603	4	4M	W1210	13	2J
U1106	3	5L	W201	2	6G	W604	4	4L	W1216	13	9C
U1106	13	5L	W203	2	6H	W605	4	6L	W1217	13	6H
			W204	2	6H	W606	13	2K	W1218	13	6H
VR301	5	7F	W205	2	6G	W607	13	5M	W1221	13	2J
VR302	5	6F	W206	2	6G	W610	4	3N	W1222	13	6D
VR303	5	9G	W207	2	6G	W611	4	3N	W1223	13	7D
VR304	5	9G	W208	2	6G	W802	5	8G	W1231	13	8K
VR308	5	9F	W209	2	6G	W805	6	6M	W1237	13	7K
VR309	5	7G	W210	2	10G	W806	6	7K	W1247	13	7D
VR310	5	9G	W223	2	5D	W807	6	6M	W1248	13	6H
VR311	5	8E	W231	2	2E	W808	6	7K	W1249	13	6H
VR312	5	10E	W232	2	2E	W810	6	6H	W1250	13	8K
VR801	6	8J	W304	5	8G	W811	6	5H	W1251	13	6H
VR2701	7	6M	W305	6	10E	W815	2	8G	W1252	13	6H
			W401	3	4H	W900	7	9B	W1255	13	6F
W9	7	8N	W406	3	3H	W1000	7	4L	W1277	13	8K
W9	7	10M	W413	3	3J	W1101	3	5K	W1288	7	6J
W11	1	6A	W414	3	3J	W1102	3	3J	W2302	7	10D
W12	1	5A	W415A	2	5E	W1103	3	6K	W2302	13	10D
W13	1	3A	W415B	2	3F	W1104	13	3J	W2304	7	11D
W14	1	2A	W416A	2	3E	W1105	13	4J	W2502	4	1L
W16	7	7K	W416B	2	3E	W1106	3	6L	W2502	13	1L
W17	6	7K	W501	13	1M	W1108	3	5L	W2701	7	6M
W18	6	8K	W502	4	3M	W1200	13	6F			
W19	2	10H	W503	4	3M	W1201	13	9C			
W20	2	9H	W504	4	3M	W1202	13	9H	Y600	4	3L

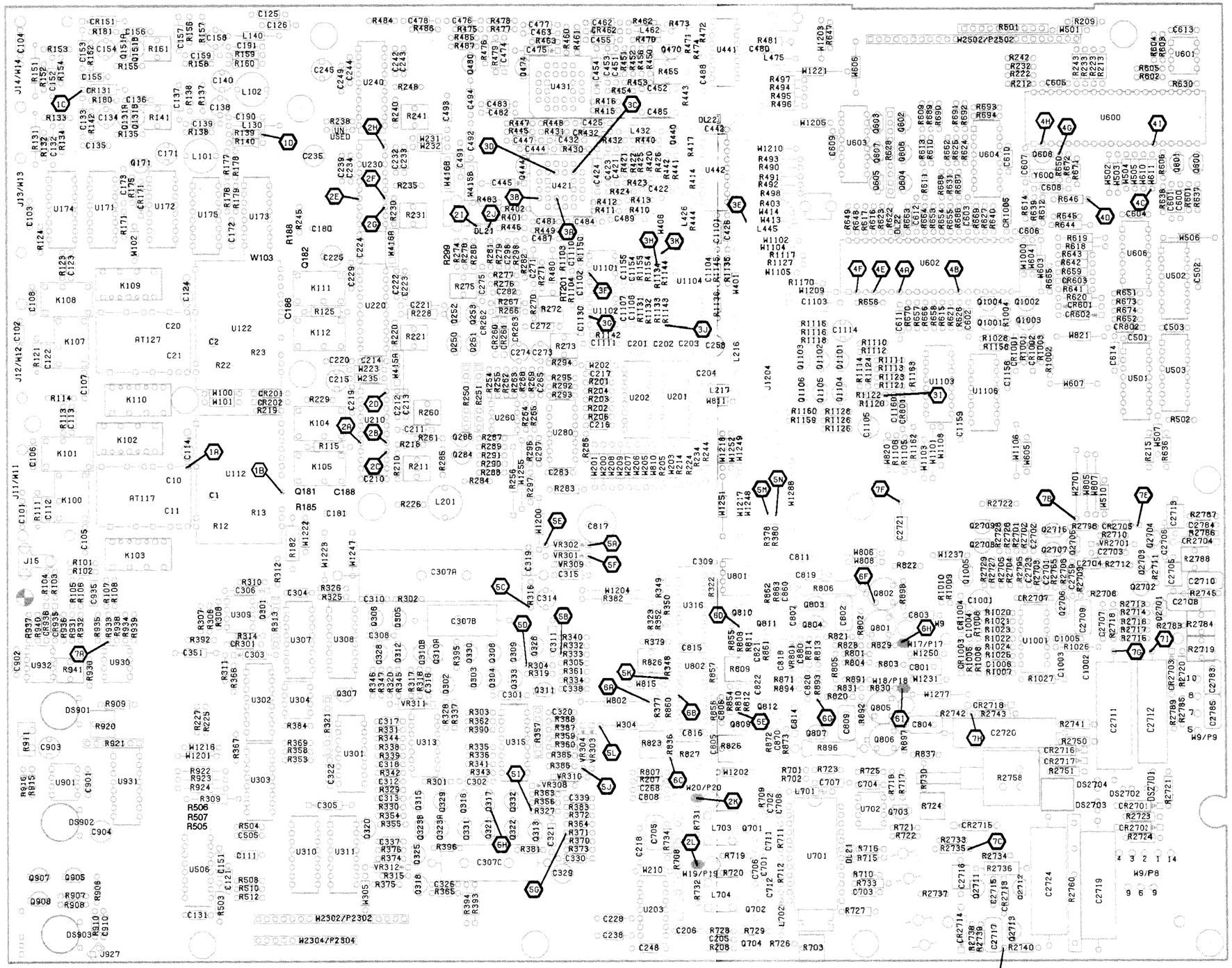

Figure 9-6b. A10—Main board for SN B710100 to B714999 (2246 1Y), and SN B110100 to B119999 (2246 MOD A).

CIRCUIT NUMBER	SCHEM NUMBER
AT117	1
AT127	1
C1	1
C2	1
C10	1
C11	1
C20	1
C21	1
C101	1
C102	1
C103	1
C104	1
C105	1
C106	1
C107	1
C108	1
C111	1
C112	1
C113	1
C114	1
C121	1
C122	1
C123	1
C124	1
C125	1
C126	1
C131	1
C132	1
C133	1
C134	1
C135	13
C136	13
C137	1
C138	1
C139	2
C140	13
C151	1
C152	1
C153	1
C154	1
C155	13
C156	13
C157	1
C158	1
C159	2
C171	13
C172	13
C173	1
C180	13
C181	13
C185	1
C186	1
C188	1
C190	1
C191	1
C201	2
C202	2
C203	2
C204	2
C205	13
C206	13
C210	2
C211	2
C212	2
C213	2
C214	13
C215	13
C216	13
C217	13
C218	2
C219	13
C220	2
C221	2
C222	2
C223	2

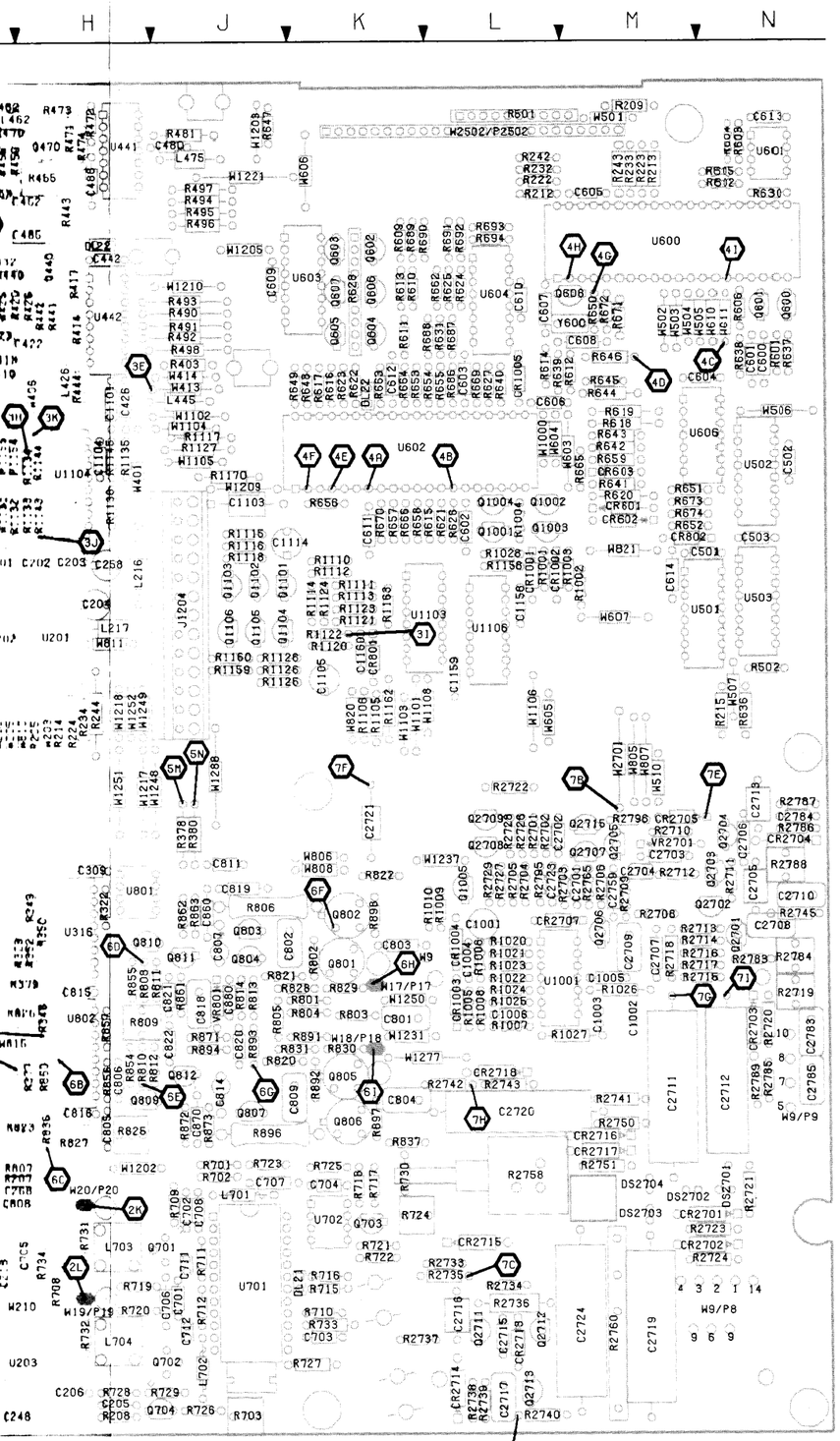
H
J
K
L
M
N
W2502/P2502
W501
R501
R209
C613
U601
U600
U604
U603
U602
U606
U502
U503
U501
U1103
U1106
U801
U802
U1001
U1104
U201
U203
U701
U702
U703
U704
W20/P20
W19/P19
W17/P17
W18/P18
W9/P9
W9/P8
Y600
Q1001
Q1002
Q1003
Q1004
Q2709
Q2708
Q2707
Q2716
Q2715
Q2705
Q2704
Q2703
Q2702
Q2701
Q1005
Q801
Q802
Q803
Q804
Q805
Q806
Q807
Q808
Q809
Q810
Q811
Q812
Q1006
Q602
Q603
Q604
Q605
Q606
Q607
Q608
Q609
Q610
Q601
Q702
Q703
Q704
Q1103
Q1104
Q1105
Q1106
Q2707
Q2708
Q2709
Q2710
Q2711
Q2712
Q2713
Q2714
Q2715
Q2716
Q2717
Q2718
Q2719
Q2720
Q2721
Q2722
Q2723
Q2724
Q2725
Q2726
Q2727
Q2728
Q2729
Q2730
Q2731
Q2732
Q2733
Q2734
Q2735
Q2736
Q2737
Q2738
Q2739
Q2740
Q2741
Q2742
Q2743
Q2744
Q2745
Q2746

A10—MAIN BOARD (cont)
(SN B710100 to B714999, 2246 1Y
SN B110100 to B119999, 2246 MOD A)

CIRCUIT NUMBER	SCHEM NUMBER	BOARD LOCATION	CIRCUIT NUMBER	SCHEM NUMBER	BOARD LOCATION	CIRCUIT NUMBER	SCHEM NUMBER	BOARD LOCATION	CIRCUIT NUMBER	SCHEM NUMBER	BOARD LOCATION
CR2713	7	10L	Q151B	1	1B	Q1004	7	4L	R188	1	3D
CR2714	7	10L	Q171	1	2B	Q1005	7	7L	R201	2	5G
CR2715	7	9L	Q181	1	6D	Q1101	3	5J	R202	2	5G
CR2716	7	9M	Q182	1	3D	Q1102	3	5J	R203	2	5G
CR2717	7	9M	Q250	2	4E	Q1103	3	5J	R204	2	5G
CR2718	7	8L	Q251	2	4F	Q1104	3	5J	R205	2	6H
			Q252	2	4E	Q1105	3	5J	R206	2	5G
DL21	2	3F	Q253	2	4F	Q1106	3	5J	R207	2	9G
DL21	2	10K	Q284	2	6F	Q2701	7	7N	R208	13	10H
DL22	3	3K	Q285	2	5F	Q2702	7	7N	R209	2	1M
DL22	3	2H	Q301	5	7C	Q2703	7	7N	R210	2	6E
			Q302	5	8E	Q2704	7	6N	R211	2	6E
DS901	7	8A	Q303	5	8F	Q2705	7	6M	R212	2	2L
DS902	7	9A	Q304	5	8F	Q2706	7	7M	R213	2	1M
DS903	7	10A	Q305	5	7E	Q2707	7	6M	R214	2	6H
DS2701	7	9N	Q306	5	7E	Q2708	7	6L	R215	2	5N
DS2702	7	9M	Q307	5	8D	Q2709	7	6L	R218	2	5E
DS2703	7	9M	Q308	5	8F	Q2711	7	10L	R219	2	5D
DS2704	7	9M	Q309	5	8F	Q2712	7	10L	R220	2	4E
			Q310A	5	8E	Q2713	7	10L	R221	2	4E
J11	1	6A	Q310B	5	8E	Q2715	7	6M	R222	2	2L
J12	1	4A	Q311	5	8F				R223	2	1M
J13	1	3A	Q312	5	8E	R12	1	6C	R224	2	6H
J14	1	1A	Q313	5	9F	R13	1	6C	R225	2	8C
J15	7	7A	Q315	5	9E	R22	1	5C	R226	13	6E
J601	4	2K	Q316	5	9F	R23	1	4C	R227	2	8C
J927	7	10B	Q317	5	9F	R101	1	7B	R228	2	4E
J1204	13	5J	Q318	5	10E	R102	1	7B	R229	2	5D
			Q320	5	9E	R103	1	7A	R230	2	3E
K100	1	6A	Q321	5	9F	R104	1	7A	R231	2	3E
K101	1	5A	Q322	5	9F	R105	1	7A	R232	2	1L
K102	1	5B	Q323A	5	9E	R106	1	7B	R233	2	1M
K103	1	6B	Q323B	5	9E	R107	1	7B	R234	2	5H
K104	1	5D	Q325	5	10E	R108	1	7B	R235	2	3E
K105	1	6D	Q326	5	7F	R111	1	6A	R238	2	2D
K107	1	4A	Q328	5	8E	R113	1	5A	R240	2	2E
K108	1	4A	Q329	5	9E	R114	1	5A	R241	2	2E
K109	1	4B	Q330	5	8F	R115	2	5D	R242	2	1L
K110	1	5B	Q331	5	9F	R121	1	4A	R243	2	1M
K111	1	4D	Q332	5	9F	R123	1	4A	R244	2	5H
K112	1	4D	Q333	5	8F	R124	1	3A	R245	13	3D
			Q440	3	2H	R125	2	4D	R248	2	2E
L101	13	2C	Q444	3	2F	R131	1	2A	R250A	2	5F
L102	13	2C	Q470	3	1H	R132	1	2A	R250B	2	5F
L130	1	2C	Q474	3	1F	R133	1	2A	R250C	2	5F
L140	1	1C	Q480	3	1F	R134	1	2A	R250D	2	5F
L201	13	6E	Q600	4	2N	R135	1	2B	R250E	2	5F
L216	13	4H	Q601	4	2N	R136	1	2C	R250F	2	5F
L217	13	5H	Q602	4	2K	R137	1	2C	R250G	2	5F
L445	13	3J	Q603	4	2K	R138	2	2C	R251A	2	5F
L475	13	1J	Q604	4	3K	R139	1	2C	R251B	2	5F
L426	3	3H	Q605	4	3K	R140	2	2C	R251C	2	5F
L432	3	2G	Q606	4	2K	R141	1	2B	R251D	2	5F
L462	3	1G	Q607	4	2K	R142	1	2B	R251E	2	5F
L701	2	9J	Q608	4	2M	R151	1	1A	R251F	2	5F
L702	2	10J	Q701	2	9J	R152	1	2A	R251G	2	5F
L703	2	9H	Q702	2	10J	R153	1	1A	R254	2	5F
L704	2	10H	Q703	2	9K	R154	1	1A	R255	2	5F
			Q704	2	10J	R155	1	1B	R256	2	6F
P8	7	10N	Q801	6	7K	R156	1	1C	R260	2	5E
P9	7	8N	Q802	6	7K	R157	1	1C	R261	2	5E
P9	7	10N	Q803	6	7J	R158	2	1C	R262	2	5F
P17	6	7K	Q804	6	7J	R159	1	1C	R263	2	5F
P18	6	8K	Q805	6	8K	R160	2	1C	R264	2	5F
P19	2	10H	Q806	6	8K	R161	1	1B	R265	2	5F
P20	2	9H	Q807	6	8J	R162	1	1B	R266	2	4F
P2302	13	10D	Q809	6	8H	R171	1	3B	R267	2	4F
P2302	7	10D	Q810	6	7H	R175	1	3B	R268	2	5F
P2304	7	10D	Q811	6	7J	R176	1	3C	R269	2	5F
P2502	13	1L	Q812	6	8J	R177	1	2C	R270	2	4F
P2502	4	1L	Q905	7	10A	R178	1	2C	R271	2	4F
P2502	4	1L	Q907	7	10A	R179	1	3C	R272	2	4F
			Q908	7	10A	R180	1	2B	R273	2	4G
Q131A	1	2B	Q1001	7	4L	R181	1	1B	R274	2	3E
Q131B	1	2B	Q1002	7	4L	R182	13	6D	R275	2	4F
Q151A	1	1B	Q1003	7	4L	R185	1	6D	R276	2	4F

A10—MAIN BOARD (cont)
(SN B710100 to B714999, 2246 1Y
SN B110100 to B119999, 2246 MOD A)

CIRCUIT NUMBER	SCHEM NUMBER	BOARD LOCATION	CIRCUIT NUMBER	SCHEM NUMBER	BOARD LOCATION	CIRCUIT NUMBER	SCHEM NUMBER	BOARD LOCATION	CIRCUIT NUMBER	SCHEM NUMBER	BOARD LOCATION
R277	2	4F	R347	5	8E	R443	3	2H	R628	4	2K
R278	2	3F	R348	5	8H	R444	3	3H	R630	4	2N
R279	2	3F	R349	5	7H	R445	3	2F	R631	4	3L
R280	2	3F	R350A	5	7H	R446	3	3F	R636	4	5N
R281	2	3F	R350B	5	7H	R447	3	2F	R637	4	3N
R282	13	3F	R350C	5	7H	R448	3	2F	R638	4	3N
R283	13	6G	R350E	5	7H	R449	3	3F	R639	4	3L
R284	2	6F	R352	5	7H	R450	3	1G	R640	4	3L
R285	2	6E	R353	6	9D	R451	3	1G	R641	4	4M
R286	2	5G	R354	5	9E	R452	3	1G	R642	4	3M
R287	2	5F	R355	5	9E	R453	3	2G	R643	4	3M
R288	2	6F	R356	5	9F	R454	3	2G	R644	4	3M
R289	2	5F	R357B	5	8F	R455	3	1H	R645	4	3M
R290	2	6F	R357C	5	8F	R456	3	1G	R646	4	3M
R291	2	5F	R357D	5	8F	R460	3	1G	R647	4	1J
R292	2	5G	R357E	5	8F	R461	3	1G	R648	4	3K
R293	2	5G	R358	6	9D	R462	3	1G	R649	4	3K
R294	2	5G	R359	5	8G	R463	3	1F	R650	4	2M
R295	2	5G	R360	5	9G	R470	3	1G	R651	4	4M
R296	2	5F	R361	5	8G	R471	3	1H	R652	4	4M
R297	13	6F	R362	5	8F	R472	3	1H	R653	4	3K
R298	13	3F	R363	5	9F	R473	3	1H	R654	4	3K
R299	1	3E	R364	5	9G	R474	3	1H	R655	4	3L
R301	5	9E	R365	5	10E	R475	3	1F	R656	4	4K
R302	5	7E	R366	5	8C	R476	3	1F	R657	4	4K
R303	5	8F	R367	5	8C	R477	3	1F	R658	4	4K
R304	5	8F	R369	6	8D	R478	3	1F	R659	4	4M
R305	5	8G	R370	5	9G	R479	3	1F	R662	4	2L
R306	5	7C	R371	5	9G	R480	13	4F	R663	4	3K
R307	5	7C	R372	5	9G	R481	13	1J	R664	4	3K
R308	5	7C	R373	5	10G	R483	3	3F	R665	4	4M
R309	5	9C	R374	13	10E	R484	3	1E	R666	4	4K
R310	5	7C	R375	5	10E	R485	3	1F	R669	4	3L
R311	5	8C	R376	5	10E	R486	3	1E	R670	4	4K
R312	13	7D	R377	5	8H	R487	3	1F	R671	4	3M
R313A	5	7D	R378	5	6J	R490	3	2J	R672	4	2M
R313B	5	7D	R379	5	7H	R491	3	3J	R673	4	4M
R313C	5	7D	R380	5	6J	R492	3	3J	R674	4	4M
R313D	5	7D	R381	5	10F	R493	3	2J	R686	4	3L
R314	5	7C	R382	5	7G	R494	3	2J	R687	4	3L
R315	5	10E	R383	5	9G	R495	3	2J	R688	4	3K
R316	5	7F	R384	5	8D	R496	3	2J	R689	4	2K
R317	5	8E	R385	5	9G	R497	3	2J	R690	4	2K
R318	5	8E	R386	5	9G	R498	3	3J	R691	4	2L
R319	5	8F	R387	5	8G	R501	4	1L	R692	4	2L
R320	5	8E	R388	5	8G	R502	4	5N	R693	4	2L
R321A	5	8D	R390	13	8F	R503	7	10C	R694	4	2L
R321B	5	8D	R392	13	7C	R504	13	9C	R701	13	9J
R321C	5	8D	R393	5	10F	R508	7	10C	R702	2	9J
R321D	5	8D	R394	5	10F	R510	7	10C	R703	2	10J
R321E	5	8D	R395	5	8E	R512	7	10C	R706	2	9K
R321F	5	8D	R396	5	10E	R601	4	3N	R707	2	10K
R322	5	7H	R401	3	3F	R602	4	2N	R708	2	10H
R323	5	7G	R402	3	3F	R603	4	1N	R709	13	9J
R325	5	7D	R403	3	3J	R604	4	1N	R710	2	10K
R326	5	7D	R410	3	3G	R605	4	1N	R711	2	9J
R327	5	9F	R411	3	3G	R606	4	2N	R712	2	10J
R328	5	8E	R412	3	3G	R609	4	2K	R715	2	10K
R329	5	9E	R413	3	3G	R610	4	2K	R716	2	10K
R330	5	9E	R414	3	3H	R611	4	3K	R717	2	9K
R331	5	8E	R415	3	2G	R612	4	3M	R718	2	9K
R332	5	7G	R416	3	2G	R613	4	2K	R719	2	10H
R333	5	8G	R417	3	2H	R614	4	3L	R720	2	10H
R334	5	8G	R420	3	2G	R615	4	4K	R721	2	9K
R335	5	9F	R421	3	2G	R616	4	3K	R722	2	9K
R336	5	9F	R422	3	2G	R617	4	3K	R723	13	9J
R337	5	8F	R423	3	3G	R618	4	3M	R724	2	9K
R338	5	8E	R424	3	3G	R619	4	3M	R725	2	9K
R339	13	9E	R425	3	2G	R620	4	4M	R726	2	10J
R340	5	7G	R426	3	2H	R621	4	4L	R727	2	10K
R341	5	9F	R430	3	2G	R622	4	3K	R728	2	10H
R342	5	9E	R431	3	2F	R623	4	3K	R729	2	10H
R343	5	9F	R432	3	2G	R624	4	2L	R730	2	9K
R344	5	8E	R440	3	2G	R625	4	2L	R731	2	9H
R345	13	8E	R441	3	2H	R626	4	4L	R732	2	10H
R346	5	8E	R442	3	2H	R627	4	3L	R733	13	10K

CIRCUIT NUMBER
R734
R801
R802
R803
R804
R805
R806
R807
R808
R809
R810
R811
R812
R813
R814
R820
R821
R822
R823
R825
R826
R827
R828
R829
R830
R831
R836
R837
R854
R855
R856
R857
R860
R861
R862
R863
R871
R872
R873
R891
R892
R893
R894
R896
R897
R898
R906
R907
R908
R909
R910
R911
R915
R916
R920
R921
R922
R923
R924
R930
R931
R932
R933
R934
R935
R936
R937
R938
R939
R940
R941
R1001
R1002
R1003
R1004
R1006
R1007

SCHEM NUMBER	BOARD LOCATION
1	3D
2	5G
2	5G
2	5G
2	5G
2	6H
2	5G
2	9G
13	10H
2	1M
2	6E
2	6E
2	2L
2	1M
2	6H
2	5N
2	5E
2	5D
2	4E
2	4E
2	2L
2	1M
2	6H
2	8C
13	6E
2	8C
2	4E
2	5D
2	3E
2	3E
2	1L
2	1M
2	5H
2	3E
2	2D
2	2E
2	2E
2	1L
2	1M
2	5H
13	3D
2	2E
2	5F
2	5F
2	5F
2	5F
2	5F
2	5F
2	5F
2	5F
2	5F
2	5F
2	5F
2	5F
2	5F
2	5F
2	5F
2	5F
2	5F
2	6F
2	5E
2	5E
2	5F
2	5F
2	5F
2	5F
2	4F
2	4F
2	5F
2	5F
2	4F
2	4F
2	4F
2	4G
2	3E
2	4F
2	4F

A10—MAIN BOARD (cont)
(SN B710100 to B714999, 2246 1Y
SN B110100 to B119999, 2246 MOD A)

CIRCUIT NUMBER	SCHEM NUMBER	BOARD LOCATION	CIRCUIT NUMBER	SCHEM NUMBER	BOARD LOCATION	CIRCUIT NUMBER	SCHEM NUMBER	BOARD LOCATION	CIRCUIT NUMBER	SCHEM NUMBER	BOARD LOCATION
R277	2	4F	R347	5	8E	R443	3	2H	R628	4	2K
R278	2	3F	R348	5	8H	R444	3	3H	R630	4	2N
R279	2	3F	R349	5	7H	R445	3	2F	R631	4	3L
R280	2	3F	R350A	5	7H	R446	3	3F	R636	4	5N
R281	2	3F	R350B	5	7H	R447	3	2F	R637	4	3N
R282	13	3F	R350C	5	7H	R448	3	2F	R638	4	3N
R283	13	6G	R350E	5	7H	R449	3	3F	R639	4	3L
R284	2	6F	R352	5	7H	R450	3	1G	R640	4	3L
R285	2	6E	R353	6	9D	R451	3	1G	R641	4	4M
R286	2	5G	R354	5	9E	R452	3	1G	R642	4	3M
R287	2	5F	R355	5	9E	R453	3	2G	R643	4	3M
R288	2	6F	R356	5	9F	R454	3	2G	R644	4	3M
R289	2	5F	R357B	5	8F	R455	3	1H	R645	4	3M
R290	2	6F	R357C	5	8F	R456	3	1G	R646	4	3M
R291	2	5F	R357D	5	8F	R460	3	1G	R647	4	1J
R292	2	5G	R357E	5	8F	R461	3	1G	R648	4	3K
R293	2	5G	R358	6	9D	R462	3	1G	R649	4	3K
R294	2	5G	R359	5	8G	R463	3	1F	R650	4	2M
R295	2	5G	R360	5	9G	R470	3	1G	R651	4	4M
R296	2	5F	R361	5	8G	R471	3	1H	R652	4	4M
R297	13	6F	R362	5	8F	R472	3	1H	R653	4	3K
R298	13	3F	R363	5	9F	R473	3	1H	R654	4	3K
R299	1	3E	R364	5	9G	R474	3	1H	R655	4	3L
R301	5	9E	R365	5	10E	R475	3	1F	R656	4	4K
R302	5	7E	R366	5	8C	R476	3	1F	R657	4	4K
R303	5	8F	R367	5	8C	R477	3	1F	R658	4	4K
R304	5	8F	R369	6	8D	R478	3	1F	R659	4	4M
R305	5	8G	R370	5	9G	R479	3	1F	R662	4	2L
R306	5	7C	R371	5	9G	R480	13	4F	R663	4	3K
R307	5	7C	R372	5	9G	R481	13	1J	R664	4	3K
R308	5	7C	R373	5	10G	R483	3	3F	R665	4	4M
R309	5	9C	R374	13	10E	R484	3	1E	R666	4	4K
R310	5	7C	R375	5	10E	R485	3	1F	R669	4	3L
R311	5	8C	R376	5	10E	R486	3	1E	R670	4	4K
R312	13	7D	R377	5	8H	R487	3	1F	R671	4	3M
R313A	5	7D	R378	5	6J	R490	3	2J	R672	4	2M
R313B	5	7D	R379	5	7H	R491	3	3J	R673	4	4M
R313C	5	7D	R380	5	6J	R492	3	3J	R674	4	4M
R313D	5	7D	R381	5	10F	R493	3	2J	R686	4	3L
R314	5	7C	R382	5	7G	R494	3	2J	R687	4	3L
R315	5	10E	R383	5	9G	R495	3	2J	R688	4	3K
R316	5	7F	R384	5	8D	R496	3	2J	R689	4	2K
R317	5	8E	R385	5	9G	R497	3	2J	R690	4	2K
R318	5	8E	R386	5	9G	R498	3	3J	R691	4	2L
R319	5	8F	R387	5	8G	R501	4	1L	R692	4	2L
R320	5	8E	R388	5	8G	R502	4	5N	R693	4	2L
R321A	5	8D	R390	13	8F	R503	7	10C	R694	4	2L
R321B	5	8D	R392	13	7C	R504	13	9C	R701	13	9J
R321C	5	8D	R393	5	10F	R508	7	10C	R702	2	9J
R321D	5	8D	R394	5	10F	R510	7	10C	R703	2	10J
R321E	5	8D	R395	5	8E	R512	7	10C	R706	2	9K
R321F	5	8D	R396	5	10E	R601	4	3N	R707	2	10K
R322	5	7H	R401	3	3F	R602	4	2N	R708	2	10H
R323	5	7G	R402	3	3F	R603	4	1N	R709	13	9J
R325	5	7D	R403	3	3J	R604	4	1N	R710	2	10K
R326	5	7D	R410	3	3G	R605	4	1N	R711	2	9J
R327	5	9F	R411	3	3G	R606	4	2N	R712	2	10J
R328	5	8E	R412	3	3G	R609	4	2K	R715	2	10K
R329	5	9E	R413	3	3G	R610	4	2K	R716	2	10K
R330	5	9E	R414	3	3H	R611	4	3K	R717	2	9K
R331	5	8E	R415	3	2G	R612	4	3M	R718	2	9K
R332	5	7G	R416	3	2G	R613	4	2K	R719	2	10H
R333	5	8G	R417	3	2H	R614	4	3L	R720	2	10H
R334	5	8G	R420	3	2G	R615	4	4K	R721	2	9K
R335	5	9F	R421	3	2G	R616	4	3K	R722	2	9K
R336	5	9F	R422	3	2G	R617	4	3K	R723	13	9J
R337	5	8F	R423	3	3G	R618	4	3M	R724	2	9K
R338	5	8E	R424	3	3G	R619	4	3M	R725	2	9K
R339	13	9E	R425	3	2G	R620	4	4M	R726	2	10J
R340	5	7G	R426	3	2H	R621	4	4L	R727	2	10K
R341	5	9F	R430	3	2G	R622	4	3K	R728	2	10H
R342	5	9E	R431	3	2F	R623	4	3K	R729	2	10H
R343	5	9F	R432	3	2G	R624	4	2L	R730	2	9K
R344	5	8E	R440	3	2G	R625	4	2L	R731	2	9H
R345	13	8E	R441	3	2H	R626	4	4L	R732	2	10H
R346	5	8E	R442	3	2H	R627	4	3L	R733	13	10K

A10—MAIN BOARD (cont)
(SN B710100 to B714999, 2246 1Y
SN B110100 to B119999, 2246 MOD A)

CIRCUIT NUMBER	SCHEM NUMBER	BOARD LOCATION	CIRCUIT NUMBER	SCHEM NUMBER	BOARD LOCATION	CIRCUIT NUMBER	SCHEM NUMBER	BOARD LOCATION	CIRCUIT NUMBER	SCHEM NUMBER	BOARD LOCATION
R734	13	9H	R1008	7	8L	R2724	7	7N	U304A	5	8D
R801	6	8K	R1009	7	7L	R2726	7	6L	U304B	5	8D
R802	6	7K	R1010	7	7K	R2727	7	7L	U304	13	8D
R803	6	8K	R1020	7	7L	R2728	7	6L	U307	5	7D
R804	6	8K	R1021	7	7L	R2729	7	7L	U307	13	7D
R805	6	8J	R1022	7	7L	R2733	7	9L	U308	5	7D
R806	6	7J	R1023	7	7L	R2734	7	10L	U308	13	7D
R807	6	9G	R1024	7	7L	R2735	7	10L	U309A	5	7C
R808	6	7H	R1025	7	8L	R2736	7	10L	U309B	5	7C
R809	6	8H	R1026	13	7M	R2737	7	10K	U309	13	7C
R810	6	8H	R1027	13	8L	R2738	7	10L	U310	5	10D
R811	6	7H	R1028	7	4L	R2739	7	10L	U310	13	10D
R812	6	8H	R1101	13	3J	R2740	7	10L	U311	5	10D
R813	6	8J	R1102	13	4J	R2741	7	8M	U311	13	10D
R814	6	8J	R1103	3	3G	R2742	7	8L	U313	5	8E
R820	6	8J	R1104	3	4G	R2743	7	8L	U315A	5	8F
R821	6	7J	R1105	3	5K	R2745	7	7N	U315B	5	8F
R822	6	7K	R1106	3	5K	R2750	7	8M	U315C	5	8F
R823	6	8G	R1110	3	4K	R2751	7	9M	U315	13	8F
R825	6	8H	R1111	3	5K	R2758	7	9L	U316A	5	7H
R826	6	8G	R1112	3	4K	R2760	7	10M	U316B	5	7H
R827	6	9H	R1113	3	5K	R2765	7	7M	U316C	5	7H
R828	6	7J	R1114	3	5K	R2783	13	7N	U316D	5	7H
R829	6	7K	R1115	3	4J	R2784	7	7N	U316	13	7H
R830	6	8K	R1116	3	4J	R2785	7	8N	U421A	3	3F
R831	6	8J	R1117	3	3J	R2786	7	6N	U421B	3	3F
R836	6	8H	R1118	3	4J	R2787	7	6N	U421C	3L	3F
R837	13	9K	R1120	3	5K	R2788	7	7N	U421	13	3F
R854	6	8H	R1121	3	5K	R2789	7	8N	U431A	3	2F
R855	6	7H	R1122	3	5K	R2795	7	7L	U431B	3	2F
R856	6	8H	R1123	3	5K	R2796	7	6M	U431C	3	2F
R857	6	8H	R1124	3	5K				U431	13	2F
R860	6	8H	R1125	3	5J	RT201	2	4F	U441A	3	1H
R861	6	7J	R1126	3	5J				U441B	3	1H
R862	6	7J	R1127	3	3J	U112	1	6C	U441C	3	1H
R863	6	7J	R1128	3	5J	U112	13	6C	U441D	3	1H
R871	6	8J	R1131	3	4G	U122	13	4C	U441E	3	1H
R872	6	8J	R1132	3	4G	U122	1	4C	U441F	3	1H
R873	6	8J	R1133	3	4H	U171	1	3B	U441	13	1H
R891	6	8K	R1134	3	4H	U171	13	3B	U442A	3	2H
R892	6	8K	R1135	3	4H	U172	1	3B	U442B	3	2H
R893	6	8J	R1136	3	4H	U172	13	3B	U442C	3	2H
R894	6	8J	R1142	3	4G	U173	13	3C	U442	13	2H
R896	6	9J	R1143	3	4H	U173	1	3C	U701	2	10J
R897	6	8K	R1144	3	4H	U174	1	3A	U702	2	9K
R898	6	7K	R1145	3	4H	U175	1	3C	U501	4	5M
R906	7	10B	R1150	3	3G	U201	2	5H	U501	13	5M
R907	7	10A	R1154	3	4G	U201	13	5H	U502	4	4N
R908	7	10A	R1155	3	4G	U202	2	5G	U502	13	4N
R909	7	8B	R1158	13	4L	U202	13	5G	U503	4	5N
R910	7	10B	R1159	13	5J	U203	13	10G	U503	13	5N
R911	7	8A	R1160	13	5J	U203A	2	10G	U506	7	10C
R915	13	9A	R1162	3	5K	U203B	2	10G	U506	13	10C
R916	13	9A	R1163	3	5K	U203C	2	10G	U600	4	2M
R920	7	8B	R1170	3	4J	U203D	2	10G	U600	13	2M
R921	7	8B	R2701	7	6L	U210	2	5E	U601	4	1N
R922	7	9C	R2702	7	6L	U210	13	5E	U601	13	1N
R923	7	9C	R2703	7	7L	U220	2	4E	U602	4	3K
R924	7	9C	R2704	7	7L	U220	13	4E	U602	13	3K
R930	7	8B	R2705	7	7L	U230	2	3E	U603A	4	2K
R931	7	7A	R2706	7	7M	U230	13	3E	U603B	4	2K
R932	7	7B	R2708	7	7M	U240	2	2E	U603C	4	2K
R933	7	7B	R2709	7	7M	U240	13	2E	U603D	4	2K
R934	7	7B	R2710	7	6M	U260	2	5F	U603	13	2K
R935	7	7B	R2711	7	7N	U260	13	5F	U604A	4	2L
R936	7	7A	R2712	7	7M	U280	2	5G	U604B	4	2L
R937	7	7A	R2713	7	7N	U301B	6	9D	U604C	4	2L
R938	7	7B	R2714	7	7N	U801A	6	7H	U604	13	2L
R939	7	7B	R2715	7	7N	U302	13	8C	U606A	4	3M
R940	7	7A	R2716	7	7N	U802	6	8H	U606B	4	3M
R941	7	8A	R2717	7	7N	U301	13	9D	U606C	4	3M
R1001	7	4L	R2718	7	7M	U301A	5	9D	U606D	4	6M
R1002	7	5M	R2719	7	7N	U301C	5	9D	U606E	4	6M
R1003	7	4L	R2720	7	8N	U302	5	8C	U606F	4	6M
R1004	7	4L	R2721	7	9N	U303	5	9C	U606	13	6M
R1006	7	8L	R2722	7	6L	U303	13	9C	U701	15	10J
R1007	7	8L	R2723	7	9M						

A10—MAIN BOARD (cont)
(SN B710100 to B714999, 2246 1Y
SN B110100 to B119999, 2246 MOD A)

CIRCUIT NUMBER	SCHEM NUMBER	BOARD LOCATION	CIRCUIT NUMBER	SCHEM NUMBER	BOARD LOCATION	CIRCUIT NUMBER	SCHEM NUMBER	BOARD LOCATION	CIRCUIT NUMBER	SCHEM NUMBER	BOARD LOCATION
U702	13	9K	VR308	5	9F	W305	6	10E	W1106	3	5L
U801B	2	7H	VR309	5	7G	W401	3	4H	W1108	3	5L
U801	13	7H	VR310	5	9G	W406	3	3H	W1200	13	6F
U802	13	8H	VR311	5	8E	W413	3	3J	W1201	13	9C
U901A	13	9A	VR312	5	10E	W414	3	3J	W1202	13	9H
U901B	13	9A	VR801	6	8J	W415A	2	5E	W1203	13	1J
U901	13	9A	VR2701	7	6M	W415B	2	3F	W1204	13	7G
U930A	7	8B				W416A	2	3E	W1205	13	2J
U930B	7	8B	W9	7	8N	W416B	2	3E	W1209	13	4J
U930	13	8B	W9	7	10N	W501	13	1M	W1210	13	2J
U931	13	9B	W9	7	10N	W502	4	3M	W1216	13	8C
U932	13	8A	W11	1	6A	W503	4	3M	W1217	13	6H
U931	7	9B	W12	1	5A	W504	4	3M	W1218	13	5H
U1001A	7	7L	W13	1	3A	W505	4	3N	W1221	13	1J
U1001B	7	7L	W14	1	2A	W506	4	3N	W1222	13	6D
U1001C	7	7L	W16	7	7L	W507	4	5N	W1223	13	7D
U1001D	7	7L	W17	6	7K	W510	4	6M	W1231	13	8K
U1001	13	7L	W18	6	8K	W603	4	4M	W1237	13	7L
U1101A	3	4G	W19	2	10H	W604	4	3L	W1247	13	7D
U1101B	3	4G	W20	2	9H	W605	4	5L	W1248	13	6H
U1101	13	4G	W100	1	5C	W606	13	1K	W1249	13	5H
U1102A	3	4G	W101	1	5C	W607	13	5M	W1250	13	8K
U1102B	3	4G	W102	1	3B	W610	4	3N	W1251	13	6H
U1102	13	4G	W103	13	3D	W611	4	3N	W1252	13	5H
U1103	3	5K	W200	2	6G	W802	5	8G	W1255	13	6F
U1103	13	5K	W201	2	6G	W805	6	6M	W1277	13	8K
U1104A	3	4H	W202	2	5G	W806	6	7K	W1288	7	6J
U1104B	3	4H	W203	2	6H	W807	6	6M	W2302	7	10D
U1104C	3	4H	W205	2	6G	W808	6	7K	W2302	13	10D
U1104	13	4H	W206	2	6G	W810	6	6H	W2502	13	10D
U1106A	3	5L	W207	2	6G	W811	6	5H	W2304	7	10D
U1106B	3	5L	W208	2	6G	W815	2	8G	W2502	4	1L
U1106C	3	5L	W209	2	6G	W820	6	5K	W2502	4	1L
U1106	13	5L	W210	2	10H	W821	6	4M	W2701	7	6M
			W223	2	5E	W900	13	9B			
VR301	5	6G	W231	2	2E	W1000	7	3L	Y600	4	3M
VR302	5	6G	W232	2	2E	W1101	3	5K			
VR303	5	8G	W235	13	5E	W1102	3	3J			
VR304	5	8G	W304	5	8G	W1103	3	5K			

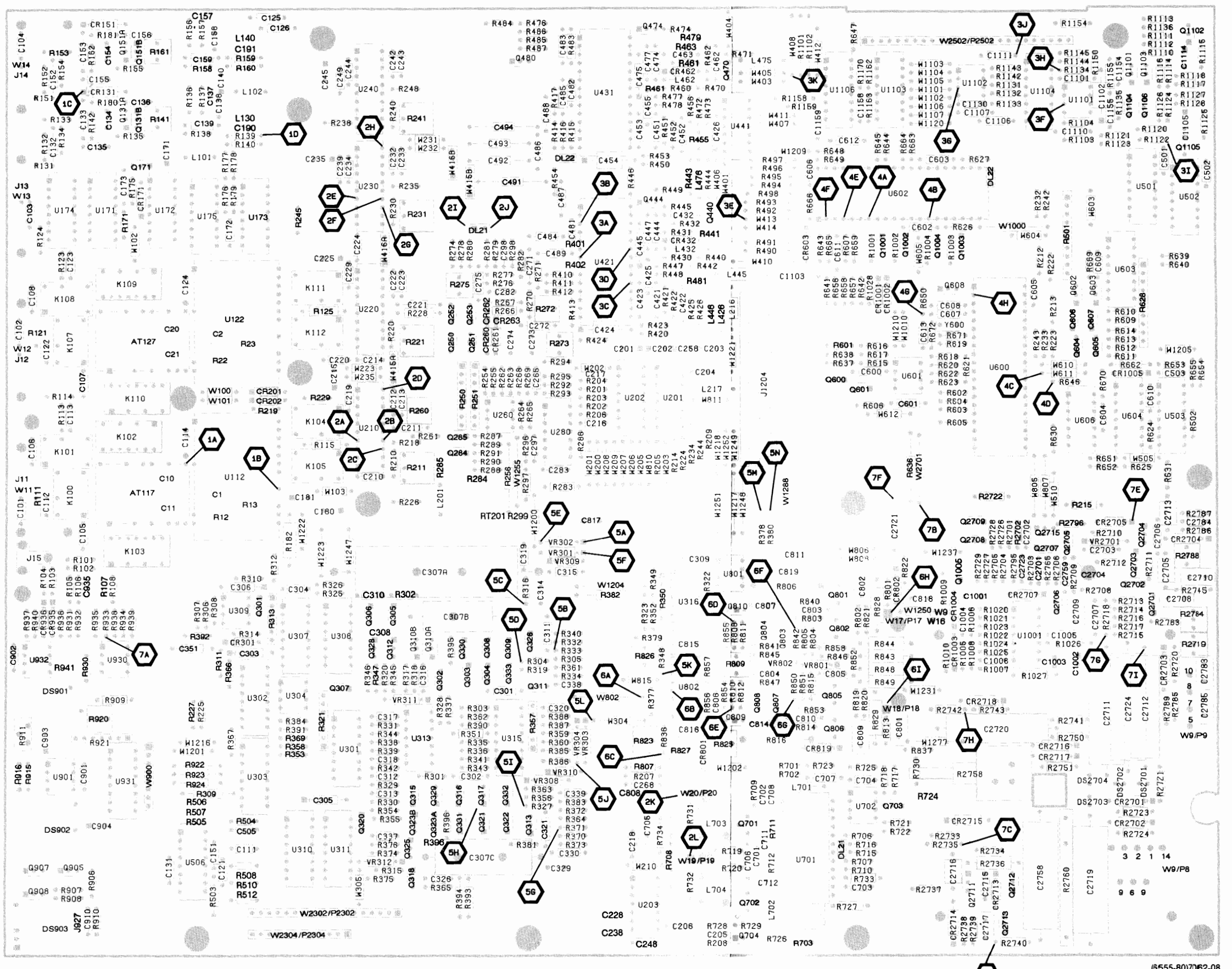

Figure 9-6c. A10—Main board for SN B710099 and below (2246 1Y), and B110099 and below (2246 MOD A).

A10—MAIN BOARD
(SN B710099 AND BELOW, 2246 1Y
SN B110099 AND BELOW, 2246 MOD A)

CIRCUIT NUMBER	SCHEM NUMBER	CIRCUIT NUMBER	SCHEM NUMBER	CIRCUIT NUMBER	SCHEM NUMBER	CIRCUIT NUMBER	SCHEM NUMBER	CIRCUIT NUMBER	SCHEM NUMBER	CIRCUIT NUMBER	SCHEM NUMBER
AT117	1	C235	13	C493	2	C2708	7	K105	1	Q600	4
AT127	1	C238	2	C494	2	C2709	13	K107	1	Q601	4
		C239	13	C501	13	C2710	7	K108	1	Q602	4
C1	1	C242	2	C502	13	C2711	7	K109	1	Q603	4
C2	1	C243	2	C503	13	C2712	7	K110	1	Q604	4
C10	1	C244	13	C505	13	C2713	7	K111	1	Q605	4
C11	1	C245	13	C600	4	C2715	7	K112	1	Q606	4
C20	1	C248	2	C601	4	C2716	7			Q607	4
C21	1	C249	13	C602	4	C2717	7	L101	13	Q608	4
C101	1	C258	2	C603	4	C2719	7	L102	13	Q701	2
C102	1	C265	13	C604	13	C2720	7	L130	1	Q702	2
C103	1	C268	2	C605	13	C2721	7	L140	1	Q703	2
C104	1	C271	2	C606	13	C2723	7	L201	13	Q704	2
C105	1	C272	2	C607	4	C2724	7	L216	13	Q801	6
C106	1	C273	2	C608	4	C2758	7	L217	13	Q802	6
C107	1	C274	2	C609	13	C2759	7	L426	3	Q803	6
C108	1	C275	2	C610	13	C2783	7	L432	3	Q804	6
C111	1	C282	13	C611	3	C2784	7	L445	13	Q805	6
C112	1	C283	13	C612	4	C2785	7	L446	13	Q806	6
C113	1	C297	13	C613	13			L462	3	Q807	6
C114	1	C298	13	C701	13	CR131	1	L475	13	Q808	6
C121	1	C301	5	C702	13	CR151	1	L476	13	Q809	6
C122	1	C302	5	C703	13	CR171	1	L701	2	Q810	6
C123	1	C303	5	C704	13	CR201	2	L702	2	Q905	7
C124	1	C304	13	C705	13	CR202	2	L703	2	Q907	7
C125	1	C305	5	C706	2	CR260	2	L704	2	Q908	7
C126	1	C306	5	C707	2	CR261	2			Q1001	7
C131	1	C307	5	C708	13	CR262	2	P8	7	Q1002	7
C132	1	C308	5	C711	2	CR263	2	P9	7	Q1003	7
C133	1	C309	13	C712	2	CR301	5	P17	6	Q1004	7
C134	1	C310	5	C801	13	CR432	3	P18	6	Q1005	7
C135	13	C311	5	C802	6	CR462	3	P19	2	Q1101	3
C136	13	C312	5	C803	6	CR603	4	P20	2	Q1102	3
C137	1	C313	5	C804	6	CR801	6	P2302	7	Q1103	3
C138	1	C314	5	C805	6	CR802	6	P2302	13	Q1104	3
C139	2	C315	5	C806	13	CR819	6	P2304	7	Q1105	3
C140	13	C316	13	C807	6	CR935	7			Q1106	3
C151	1	C317	13	C808	6	CR936	7	Q131	1	Q2701	7
C152	1	C318	13	C809	6	CR1001	7	Q151	1	Q2702	7
C153	1	C319	6	C810	6	CR1002	7	Q171	1	Q2703	7
C154	1	C320	13	C811	2	CR1003	7	Q250	2	Q2704	7
C155	13	C321	5	C814	6	CR1004	7	Q251	2	Q2705	7
C156	13	C326	5	C815	13	CR1005	7	Q252	2	Q2706	7
C157	1	C329	5	C816	13	CR2701	7	Q253	2	Q2707	7
C158	1	C330	5	C817	6	CR2702	7	Q284	2	Q2708	7
C159	2	C337	13	C818	13	CR2703	7	Q285	2	Q2709	7
C171	13	C338	13	C819	6	CR2704	7	Q301	5	Q2711	7
C172	13	C339	13	C901	13	CR2705	7	Q302	5	Q2712	7
C173	1	C351	13	C902	13	CR2707	7	Q303	5	Q2713	7
C180	13	C421	3	C903	13	CR2713	7	Q304	5	Q2715	7
C181	13	C422	3	C904	13	CR2714	7	Q305	5		
C190	1	C423	3	C910	7	CR2715	7	Q306	5	R12	1
C191	1	C424	3	C935	7	CR2716	7	Q307	5	R13	1
C201	2	C425	3	C1001	7	CR2717	7	Q308	5	R22	1
C202	2	C426	3	C1002	7	CR2718	7	Q309	5	R23	1
C203	2	C432	3	C1003	7			Q310	5	R101	1
C204	2	C444	3	C1004	7	DL21	2	Q311	5	R102	1
C205	13	C445	13	C1005	13	DL22	4	Q312	5	R103	1
C206	13	C447	3	C1006	13			Q313	5	R104	1
C210	2	C451	3	C1101	13	DS901	7	Q315	5	R105	1
C211	2	C452	3	C1102	13	DS902	7	Q316	5	R106	1
C212	2	C453	3	C1103	3	DS903	7	Q317	5	R107	1
C213	2	C454	3	C1105	3	DS2701	7	Q318	5	R108	1
C214	13	C455	3	C1106	3	DS2702	7	Q320	5	R111	1
C215	13	C462	3	C1107	3	DS2703	7	Q321	5	R113	1
C216	13	C463	3	C1110	3	DS2704	7	Q322	5	R114	1
C217	13	C474	3	C1111	3			Q323	5	R115	2
C218	2	C475	13	C1114	3	J11	1	Q325	5	R121	1
C219	13	C477	3	C1130	3	J12	1	Q326	5	R123	1
C220	2	C481	13	C1154	3	J13	1	Q328	5	R124	1
C221	2	C482	13	C1155	3	J14	1	Q329	5	R125	2
C222	2	C483	3	C1158	13	J15	7	Q330	5	R131	1
C223	2	C484	3	C1159	13	J927	7	Q331	5	R132	1
C224	13	C485	3	C2701	13	J1204	13	Q332	5	R133	1
C225	13	C486	3	C2702	13			Q333	5	R134	1
C228	2	C487	3	C2703	7	K100	1	Q440	3	R135	1
C229	13	C488	3	C2704	7	K101	1	Q444	3	R136	1
C232	2	C489	3	C2705	7	K102	1	Q470	3	R137	1
C233	2	C491	2	C2706	7	K103	1	Q474	3	R138	2
C234	13	C492	2	C2707	7	K104	1	Q480	3	R139	1

A10—MAIN BOARD (cont)
(SN B710099 AND BELOW, 2246 1Y
SN B110099 AND BELOW, 2246 MOD A)

CIRCUIT NUMBER	SCHEM NUMBER	CIRCUIT NUMBER	SCHEM NUMBER	CIRCUIT NUMBER	SCHEM NUMBER	CIRCUIT NUMBER	SCHEM NUMBER	CIRCUIT NUMBER	SCHEM NUMBER	CIRCUIT NUMBER	SCHEM NUMBER
R140	2	R270	2	R352	5	R460	3	R649	4	R842	6
R141	1	R271	2	R353	6	R461	3	R650	4	R843	6
R142	1	R272	2	R354	5	R462	3	R651	4	R844	6
R151	1	R273	2	R355	5	R463	3	R652	4	R845	6
R152	1	R274	2	R356	5	R470	3	R653	4	R846	6
R153	1	R275	2	R357	5	R471	3	R654	4	R847	6
R154	1	R276	2	R358	6	R472	3	R655	4	R848	6
R155	1	R277	2	R359	5	R473	3	R656	4	R849	6
R156	1	R278	2	R360	5	R474	3	R657	4	R850	6
R157	1	R279	2	R361	5	R476	3	R658	4	R851	6
R158	2	R280	2	R362	5	R477	3	R659	4	R852	6
R159	1	R281	2	R363	5	R478	3	R662	4	R853	6
R160	2	R282	13	R364	5	R479	3	R663	4	R854	6
R161	1	R283	13	R365	5	R481	13	R664	4	R855	6
R162	1	R284	2	R366	5	R483	3	R665	4	R856	6
R171	1	R285	2	R367	5	R484	3	R666	4	R857	6
R175	1	R286	2	R369	6	R485	3	R669	4	R858	6
R176	1	R287	2	R370	5	R486	3	R670	4	R906	7
R177	1	R288	2	R371	5	R487	3	R671	4	R907	7
R178	1	R289	2	R372	5	R490	3	R672	4	R908	7
R179	1	R290	2	R373	5	R491	3	R701	13	R909	7
R180	1	R291	2	R374	13	R492	3	R702	2	R910	7
R181	1	R292	2	R375	5	R493	3	R703	2	R911	7
R182	13	R293	2	R376	5	R494	3	R706	2	R915	13
R201	2	R294	2	R377	5	R495	3	R707	2	R916	13
R202	2	R295	2	R378	5	R496	3	R708	2	R920	7
R203	2	R296	2	R379	5	R497	3	R709	13	R921	7
R204	2	R297	13	R380	5	R498	3	R710	2	R922	7
R205	2	R298	13	R381	5	R501	4	R711	2	R923	7
R206	2	R299	2	R382	5	R502	4	R712	2	R924	7
R207	2	R301	5	R383	5	R503	7	R715	2	R930	7
R208	13	R302	5	R384	5	R504	13	R716	2	R931	7
R209	2	R303	5	R385	5	R505	7	R717	2	R932	7
R210	2	R304	5	R386	5	R506	7	R718	2	R933	7
R211	2	R305	5	R387	5	R507	7	R719	2	R934	7
R212	2	R306	5	R388	5	R508	7	R720	2	R935	7
R213	2	R307	5	R390	13	R510	7	R721	2	R936	7
R214	2	R308	5	R391	5	R512	7	R722	2	R937	7
R215	2	R309	5	R392	13	R601	4	R723	13	R938	7
R218	2	R310	5	R393	5	R602	4	R724	2	R939	7
R219	2	R311	5	R394	5	R603	4	R725	2	R940	7
R220	2	R312	13	R395	5	R604	4	R726	2	R941	7
R221	2	R313	5	R396	5	R605	4	R727	2	R1001	7
R222	2	R314	5	R401	3	R606	4	R728	2	R1002	7
R223	2	R315	5	R402	3	R607	3	R729	2	R1003	7
R224	2	R316	5	R410	3	R609	4	R730	2	R1004	7
R225	2	R317	5	R411	3	R610	4	R731	2	R1005	7
R226	13	R318	5	R412	3	R611	4	R732	2	R1006	7
R227	2	R319	5	R413	3	R612	4	R733	13	R1007	7
R228	2	R320	5	R414	3	R613	4	R734	13	R1008	7
R229	2	R321	5	R415	3	R614	4	R801	6	R1009	7
R230	2	R322	5	R416	3	R615	4	R802	6	R1010	7
R231	2	R323	5	R417	3	R616	4	R803	6	R1020	7
R232	2	R325	5	R420	3	R617	4	R804	6	R1021	7
R233	2	R326	5	R421	3	R618	4	R805	6	R1022	7
R234	2	R327	5	R422	3	R619	4	R806	6	R1023	7
R235	2	R328	5	R423	3	R620	4	R807	6	R1024	7
R238	2	R329	5	R424	3	R621	4	R808	6	R1025	7
R240	2	R330	5	R425	3	R622	4	R809	6	R1026	13
R241	2	R331	5	R426	3	R623	4	R810	6	R1027	13
R242	2	R332	5	R430	3	R624	4	R811	6	R1028	7
R243	2	R333	5	R431	3	R625	4	R812	6	R1101	13
R244	2	R334	5	R432	3	R626	4	R813	6	R1102	13
R245	13	R335	5	R440	3	R627	4	R814	6	R1103	3
R248	2	R336	5	R441	3	R628	4	R815	6	R1104	3
R250	2	R337	5	R442	3	R630	4	R816	6	R1110	3
R251	2	R338	5	R443	3	R631	4	R819	6	R1111	3
R254	2	R339	13	R444	3	R636	4	R820	6	R1112	3
R255	2	R340	5	R445	3	R637	4	R821	6	R1113	3
R256	2	R341	5	R446	3	R638	4	R822	6	R1114	3
R260	2	R342	5	R447	3	R639	4	R823	6	R1115	3
R261	2	R343	5	R448	3	R640	4	R825	6	R1116	3
R262	2	R344	5	R449	3	R641	4	R826	6	R1117	3
R263	2	R345	13	R450	3	R642	4	R827	6	R1118	3
R264	2	R346	5	R451	3	R643	4	R828	6	R1120	3
R265	2	R347	5	R452	3	R644	4	R829	6	R1121	3
R266	2	R348	5	R453	3	R645	4	R836	6	R1122	3
R267	2	R349	5	R454	3	R646	4	R837	13	R1123	3
R268	2	R350	5	R455	3	R647	4	R840	6	R1124	3
R269	2	R351	5	R456	3	R648	4	R841	6	R1125	3

MORE

CIRCUIT NUMBER	SCHEM NUMBER
0600	4
0601	4
0602	4
0603	4
0604	4
0605	4
0606	4
0607	4
0608	4
0701	2
0702	2
0703	2
0704	2
0801	6
0802	6
0803	6
0804	6
0805	6
0806	6
0807	6
0808	6
0809	6
0810	6
0905	7
0907	7
0908	7
1001	7
1002	7
1003	7
1004	7
1005	7
1101	3
1102	3
1103	3
1104	3
1105	3
1106	3
2701	7
2702	7
2703	7
2704	7
2705	7
2706	7
2707	7
2708	7
2709	7
2711	7
2712	7
2713	7
2715	7
R112	1
R113	1
R122	1
R123	1
R1101	1
R1102	1
R1103	1
R1104	1
R1105	1
R1106	1
R1107	1
R1108	1
R1111	1
R1113	1
R1114	1
R1115	2
R1121	1
R1123	1
R1124	1
R1125	2
R1131	1
R1132	1
R1133	1
R1134	1
R1135	1
R1136	1
R1137	1
R1138	2
R1139	1

A10—MAIN BOARD (cont)
(SN B710099 AND BELOW, 2246 1Y SN B110099 AND BELOW, 2246 MOD A)

CIRCUIT NUMBER	SCHEM NUMBER	CIRCUIT NUMBER	SCHEM NUMBER	CIRCUIT NUMBER	SCHEM NUMBER	CIRCUIT NUMBER	SCHEM NUMBER	CIRCUIT NUMBER	SCHEM NUMBER	CIRCUIT NUMBER	SCHEM NUMBER
R140	2	R270	2	R352	5	R460	3	R649	4	R842	6
R141	1	R271	2	R353	6	R461	3	R650	4	R843	6
R142	1	R272	2	R354	5	R462	3	R651	4	R844	6
R151	1	R273	2	R355	5	R463	3	R652	4	R845	6
R152	1	R274	2	R356	5	R470	3	R653	4	R846	6
R153	1	R275	2	R357	5	R471	3	R654	4	R847	6
R154	1	R276	2	R358	6	R472	3	R655	4	R848	6
R155	1	R277	2	R359	5	R473	3	R656	4	R849	6
R156	1	R278	2	R360	5	R474	3	R657	4	R850	6
R157	1	R279	2	R361	5	R476	3	R658	4	R851	6
R158	2	R280	2	R362	5	R477	3	R659	4	R852	6
R159	1	R281	2	R363	5	R478	3	R662	4	R853	6
R160	2	R282	13	R364	5	R479	3	R663	4	R854	6
R161	1	R283	13	R365	5	R481	13	R664	4	R855	6
R162	1	R284	2	R366	5	R483	3	R665	4	R856	6
R171	1	R285	2	R367	5	R484	3	R666	4	R857	6
R175	1	R286	2	R369	6	R485	3	R669	4	R858	6
R176	1	R287	2	R370	5	R486	3	R670	4	R906	7
R177	1	R288	2	R371	5	R487	3	R671	4	R907	7
R178	1	R289	2	R372	5	R490	3	R672	4	R908	7
R179	1	R290	2	R373	5	R491	3	R701	13	R909	7
R180	1	R291	2	R374	13	R492	3	R702	2	R910	7
R181	1	R292	2	R375	5	R493	3	R703	2	R911	7
R182	13	R293	2	R376	5	R494	3	R706	2	R915	13
R201	2	R294	2	R377	5	R495	3	R707	2	R916	13
R202	2	R295	2	R378	5	R496	3	R708	2	R920	7
R203	2	R296	2	R379	5	R497	3	R709	13	R921	7
R204	2	R297	13	R380	5	R498	3	R710	2	R922	7
R205	2	R298	13	R381	5	R501	4	R711	2	R923	7
R206	2	R299	2	R382	5	R502	4	R712	2	R924	7
R207	2	R301	5	R383	5	R503	7	R715	2	R930	7
R208	13	R302	5	R384	5	R504	13	R716	2	R931	7
R209	2	R303	5	R385	5	R505	7	R717	2	R932	7
R210	2	R304	5	R386	5	R506	7	R718	2	R933	7
R211	2	R305	5	R387	5	R507	7	R719	2	R934	7
R212	2	R306	5	R388	5	R508	7	R720	2	R935	7
R213	2	R307	5	R390	13	R510	7	R721	2	R936	7
R214	2	R308	5	R391	5	R512	7	R722	2	R937	7
R215	2	R309	5	R392	13	R601	4	R723	13	R938	7
R218	2	R310	5	R393	5	R602	4	R724	2	R939	7
R219	2	R311	5	R394	5	R603	4	R725	2	R940	7
R220	2	R312	13	R395	5	R604	4	R726	2	R941	7
R221	2	R313	5	R396	5	R605	4	R727	2	R1001	7
R222	2	R314	5	R401	3	R606	4	R728	2	R1002	7
R223	2	R315	5	R402	3	R607	3	R729	2	R1003	7
R224	2	R316	5	R410	3	R609	4	R730	2	R1004	7
R225	2	R317	5	R411	3	R610	4	R731	2	R1005	7
R226	13	R318	5	R412	3	R611	4	R732	2	R1006	7
R227	2	R319	5	R413	3	R612	4	R733	13	R1007	7
R228	2	R320	5	R414	3	R613	4	R734	13	R1008	7
R229	2	R321	5	R415	3	R614	4	R801	6	R1009	7
R230	2	R322	5	R416	3	R615	4	R802	6	R1010	7
R231	2	R323	5	R417	3	R616	4	R803	6	R1020	7
R232	2	R325	5	R420	3	R617	4	R804	6	R1021	7
R233	2	R326	5	R421	3	R618	4	R805	6	R1022	7
R234	2	R327	5	R422	3	R619	4	R806	6	R1023	7
R235	2	R328	5	R423	3	R620	4	R807	6	R1024	7
R238	2	R329	5	R424	3	R621	4	R808	6	R1025	7
R240	2	R330	5	R425	3	R622	4	R809	6	R1026	13
R241	2	R331	5	R426	3	R623	4	R810	6	R1027	13
R242	2	R332	5	R430	3	R624	4	R811	6	R1028	7
R243	2	R333	5	R431	3	R625	4	R812	6	R1101	13
R244	2	R334	5	R432	3	R626	4	R813	6	R1102	13
R245	13	R335	5	R440	3	R627	4	R814	6	R1103	3
R248	2	R336	5	R441	3	R628	4	R815	6	R1104	3
R250	2	R337	5	R442	3	R630	4	R816	6	R1110	3
R251	2	R338	5	R443	3	R631	4	R819	6	R1111	3
R254	2	R339	13	R444	3	R636	4	R820	6	R1112	3
R255	2	R340	5	R445	3	R637	4	R821	6	R1113	3
R256	2	R341	5	R446	3	R638	4	R822	6	R1114	3
R260	2	R342	5	R447	3	R639	4	R823	6	R1115	3
R261	2	R343	5	R448	3	R640	4	R825	6	R1116	3
R262	2	R344	5	R449	3	R641	4	R826	6	R1117	3
R263	2	R345	13	R450	3	R642	4	R827	6	R1118	3
R264	2	R346	5	R451	3	R643	4	R828	6	R1120	3
R265	2	R347	5	R452	3	R644	4	R829	6	R1121	3
R266	2	R348	5	R453	3	R645	4	R836	6	R1122	3
R267	2	R349	5	R454	3	R646	4	R837	13	R1123	3
R268	2	R350	5	R455	3	R647	4	R840	6	R1124	3
R269	2	R351	5	R456	3	R648	4	R841	6	R1125	3

A10—MAIN BOARD (cont)
(SN B710099 AND BELOW, 2246 1Y SN B110099 AND BELOW, 2246 MOD A)

CIRCUIT NUMBER	SCHEM NUMBER	CIRCUIT NUMBER	SCHEM NUMBER	CIRCUIT NUMBER	SCHEM NUMBER	CIRCUIT NUMBER	SCHEM NUMBER	CIRCUIT NUMBER	SCHEM NUMBER	CIRCUIT NUMBER	SCHEM NUMBER
R1126	3	R2736	7	U240	13	U604	13	W17	6	W810	6
R1127	3	R2737	7	U260	2	U606	4	W18	6	W811	6
R1128	3	R2738	7	U260	13	U606	13	W19	2	W815	2
R1131	3	R2739	7	U280	2	U701	2	W20	2	W900	13
R1132	3	R2740	7	U301	5	U701	13	W100	1	W1000	7
R1133	3	R2741	7	U301	6	U702	2	W101	1	W1010	7
R1134	3	R2742	7	U301	13	U702	13	W102	1	W1101	3
R1135	3	R2743	7	U302	5	U801	2	W103	13	W1102	3
R1136	3	R2745	7	U302	13	U801	6	W200	2	W1103	13
R1142	3	R2750	7	U303	5	U801	13	W201	2	W1104	3
R1143	3	R2751	7	U303	13	U802	6	W202	2	W1105	3
R1144	3	R2758	7	U304	5	U802	13	W203	2	W1106	3
R1145	3	R2760	7	U304	13	U901	13	W205	2	W1107	3
R1150	3	R2765	7	U307	5	U930	7	W206	2	W1120	3
R1154	3	R2783	13	U307	13	U930	13	W207	2	W1200	13
R1155	3	R2784	7	U308	5	U931	7	W208	2	W1201	13
R1158	13	R2785	7	U308	13	U931	13	W209	2	W1202	13
R1159	13	R2786	7	U309	5	U932	13	W210	2	W1204	13
R1162	3	R2787	7	U309	13	U1001	7	W223	2	W1205	13
R1163	3	R2788	7	U310	5	U1001	13	W231	2	W1209	13
R1170	3	R2789	7	U310	13	U1101	3	W232	2	W1210	13
R2701	7	R2795	7	U311	5	U1101	7	W235	13	W1216	13
R2702	7	R2796	7	U311	13	U1101	13	W304	5	W1217	13
R2703	7			U313	5	U1102	3	W305	6	W1218	13
R2704	7	RT201	2	U315	5	U1102	13	W401	3	W1221	13
R2705	7			U315	13	U1103	3	W403	3	W1222	13
R2706	7	U112	1	U316	5	U1103	13	W404	3	W1223	13
R2708	7	U112	13	U316	13	U1104	3	W405	3	W1231	13
R2709	7	U122	1	U421	3	U1104	13	W406	3	W1237	13
R2710	7	U122	13	U421	13	U1106	3	W407	3	W1247	13
R2711	7	U171	1	U431	3	U1106	13	W408	3	W1248	13
R2712	7	U171	13	U431	13			W410	3	W1249	13
R2713	7	U172	1	U441	3	VR301	5	W411	3	W1250	13
R2714	7	U172	13	U441	13	VR302	5	W412	3	W1251	13
R2715	7	U173	1	U501	4	VR303	5	W413	3	W1252	13
R2716	7	U173	13	U501	13	VR304	5	W414	3	W1255	13
R2717	7	U174	1	U502	4	VR308	5	W415	2	W1277	13
R2718	7	U175	1	U502	13	VR309	5	W416	2	W1288	7
R2719	7	U201	2	U503	4	VR310	5	W505	4	W2302	7
R2720	7	U201	13	U503	13	VR311	5	W510	4	W2302	13
R2721	7	U202	2	U506	7	VR312	5	W603	4	W2304	7
R2722	7	U202	13	U506	13	VR801	6	W604	4	W2502	4
R2723	7	U203	2	U600	4	VR802	6	W605	4	W2502	13
R2724	7	U203	13	U600	13	VR2701	7	W610	4	W2701	7
R2726	7	U210	2	U601	4			W611	4		
R2727	7	U210	13	U601	13	W9	7	W612	4	Y600	4
R2728	7	U220	2	U602	4	W11	1	W802	5		
R2729	7	U220	13	U602	13	W12	1	W805	6		
R2733	7	U230	2	U603	4	W13	1	W806	6		
R2734	7	U230	13	U603	13	W14	1	W807	6		
R2735	7	U240	2	U604	4	W16	7	W808	6		

MORE

WAVEFORMS FOR DIAGRAM 1

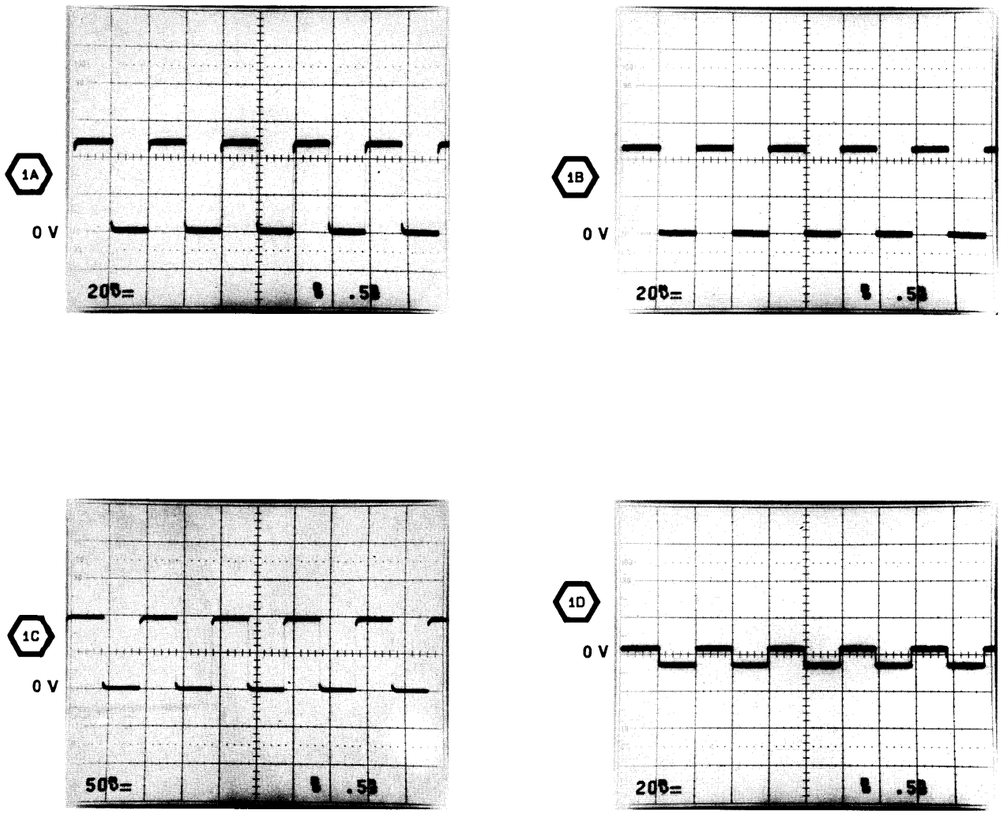

6555-39

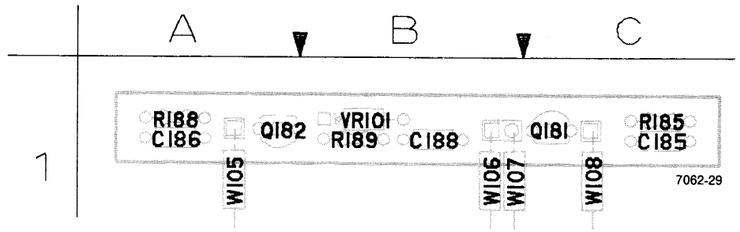

Figure 9-7. A9—2 mV Bandwidth board for SN B700100 to B714999 (2246 1Y), and SN B100100 to B119999 (2246 MOD A) .

A9—2 mV BANDWIDTH BOARD

CIRCUIT NUMBER	SCHEM NUMBER	CIRCUIT NUMBER	SCHEM NUMBER	CIRCUIT NUMBER	SCHEM NUMBER
C185	1	R185	1	W106	1
C186	1	R188	1	W107	1
C188	1	R189	1	W108	1
				W212	1
Q181	1	VR101	1	W222	1
Q182	1				
		W105	1		

Static Sensitive Devices
See Maintenance Section

COMPONENT NUMBER EXAMPLE

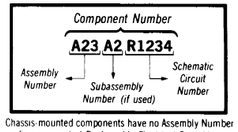

Chassis-mounted components have no Assembly Number prefix—see end of Replaceable Electrical Parts List.

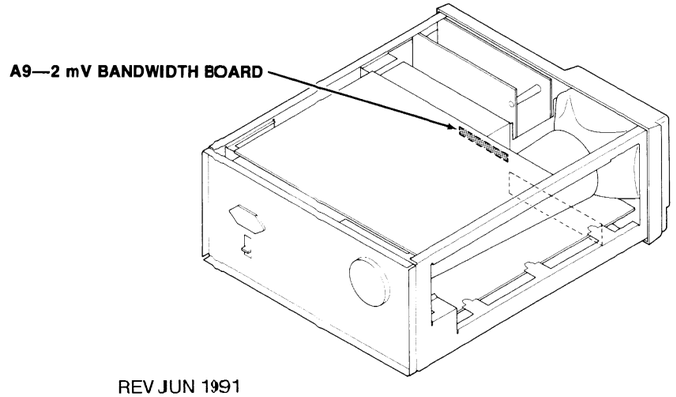

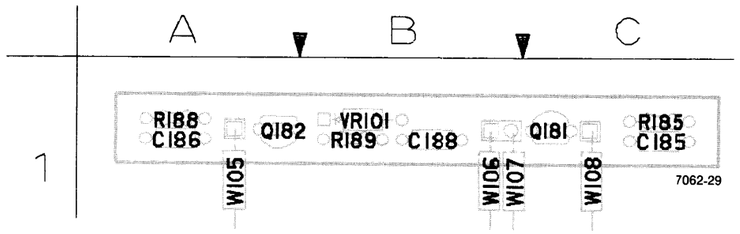

Figure 9-7. A9—2 mV Bandwidth board for SN B700100 to B714999 (2246 1Y), and SN B100100 to B119999 (2246 MOD A) .

A9—2 mV BANDWIDTH BOARD					
CIRCUIT NUMBER	SCHEM NUMBER	CIRCUIT NUMBER	SCHEM NUMBER	CIRCUIT NUMBER	SCHEM NUMBER
C185	1	R185	1	W106	1
C186	1	R188	1	W107	1
C188	1	R189	1	W108	1
				W212	1
Q181	1	VR101	1	W222	1
Q182	1				
		W105	1		

Static Sensitive Devices
See Maintenance Section

COMPONENT NUMBER EXAMPLE

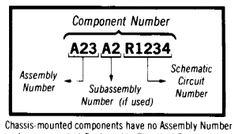

Chassis-mounted components have no Assembly Number prefix—see end of Replaceable Electrical Parts List.

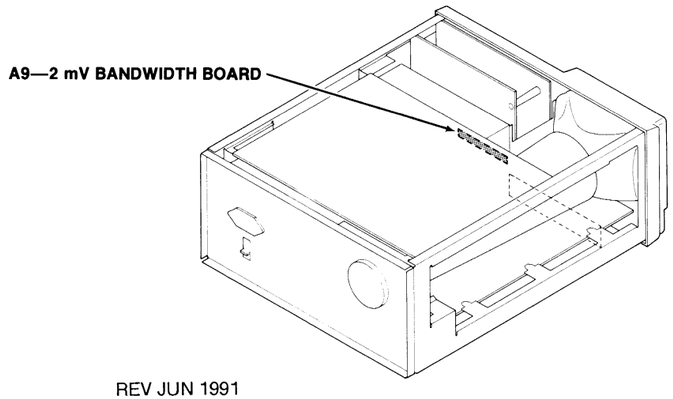

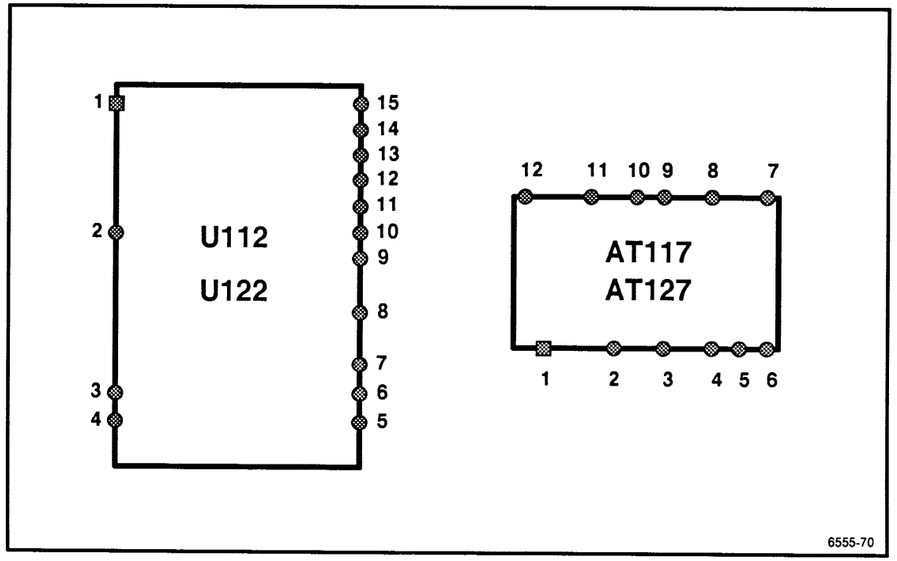

Figure 9-8. Hybrid pin identifiers.

VERTICAL INPUTS DIAGRAM 1
(SN B710100 AND ABOVE, 2246 1Y
SN B110100 AND ABOVE, 2246 MOD A)

ASSEMBLY A10

CIRCUIT NUMBER	SCHEM LOCATION	BOARD LOCATION	CIRCUIT NUMBER	SCHEM LOCATION	BOARD LOCATION	CIRCUIT NUMBER	SCHEM LOCATION	BOARD LOCATION	CIRCUIT NUMBER	SCHEM LOCATION	BOARD LOCATION
AT117	1J	6B	R151	8A	1A	Q151A	8K	1B	R156	8K	1C
AT127	3H	4B	R152	8H	2A	Q151B	8J	1B	R157	8K	1C
			C157	8L	1C	Q171	5C	2B	R159	8L	1C
C1	1K	6C	C158	8K	1C	Q181	3M	1C	R161	8J	1B
C2	4K	4C	C173	5C	3B	Q182	6L	1A	R162	8J	1B
C10	2H	6C	C185	3M	1C				R171	5B	3B
C11	2J	6C	C186	6L	1A	R12	2K	6C	R175	5B	3B
C20	4H	4C	C188	3M	1B	R13	2K	6C	R176	6C	3C
C21	5J	4C	C190	7L	2C	R22	4K	5C	R177	6C	2C
C101	1B	6A	C191	8L	1C	R23	4K	4C	R178	6E	2C
C102	3B	4A				R101	1B	7B	R179	6E	3C
C103	7B	3A	CR131	6H	2B	R102	3B	7B	R180	6J	2B
C104	8B	1A	CR151	8H	1B	R103	7B	7A	R181	8J	1B
C105	1F	6B	CR171	5B	3B	R104	7B	7A	R185	3L	1C
C106	2G	5A				R105	1B	7A	R188	6L	1A
C107	4F	5B	J11	1A	6A	R106	3B	7B			
C108	5G	4A	J12	4A	4A	R107	7B	7B	U112	1L	6C
C111	1B	10C	J13	7A	3A	R108	8B	7B	U122	4L	4C
C112	1F	6A	J14	8A	1A	R111	1A	6A	U171	4C	3B
C113	1F	5A				R113	1G	5A	U172	5D	3B
C114	2J	5C	K100	1F	6A	R114	1F	5A	U173	6E	3C
C121	3B	10C	K101	1G	5A	R121	3A	4A	U174	1E	3A
C122	4F	4A	K102	1G	5B	R123	3G	4A	U175	4E	3C
C123	4F	4A	K103	1H	6B	R124	3F	3A			
C124	4J	4C	K104	2L	5D	R131	7A	2A	W11	1B	6A
C125	4B	1D	K105	2K	6D	R132	6H	2A	W12	3A	5A
C126	7F	1D	K107	4F	4A	R133	6H	2A	W13	7A	3A
C131	7B	10C	K108	4G	4A	R134	7H	2A	W14	7A	2A
C132	7H	2A	K109	4G	4B	R135	7J	2B	W100	4F	5C
C133	7J	2B	K110	4H	5B	R136	7K	2C	W101	5G	5C
C134	7J	2B	K111	5L	4D	R137	7K	2C	W102	5G	3B
C137	7L	2C	K112	5K	4D	R139	7L	2C			
C138	7K	2C				R141	7J	2B			
C151	8B	10C	L130	7L	2C	R142	7J	2B			
C152	8H	2A	L140	8L	1C	R153	8H	1A			
C153	8J	1B	Q131A	7K	2B	R154	8H	1A			
C154	8J	1B	Q131B	7J	2B	R155	8J	1B			

Partial A10 also shown on diagrams 2, 3, 4, 5, 6, 7 and 13.

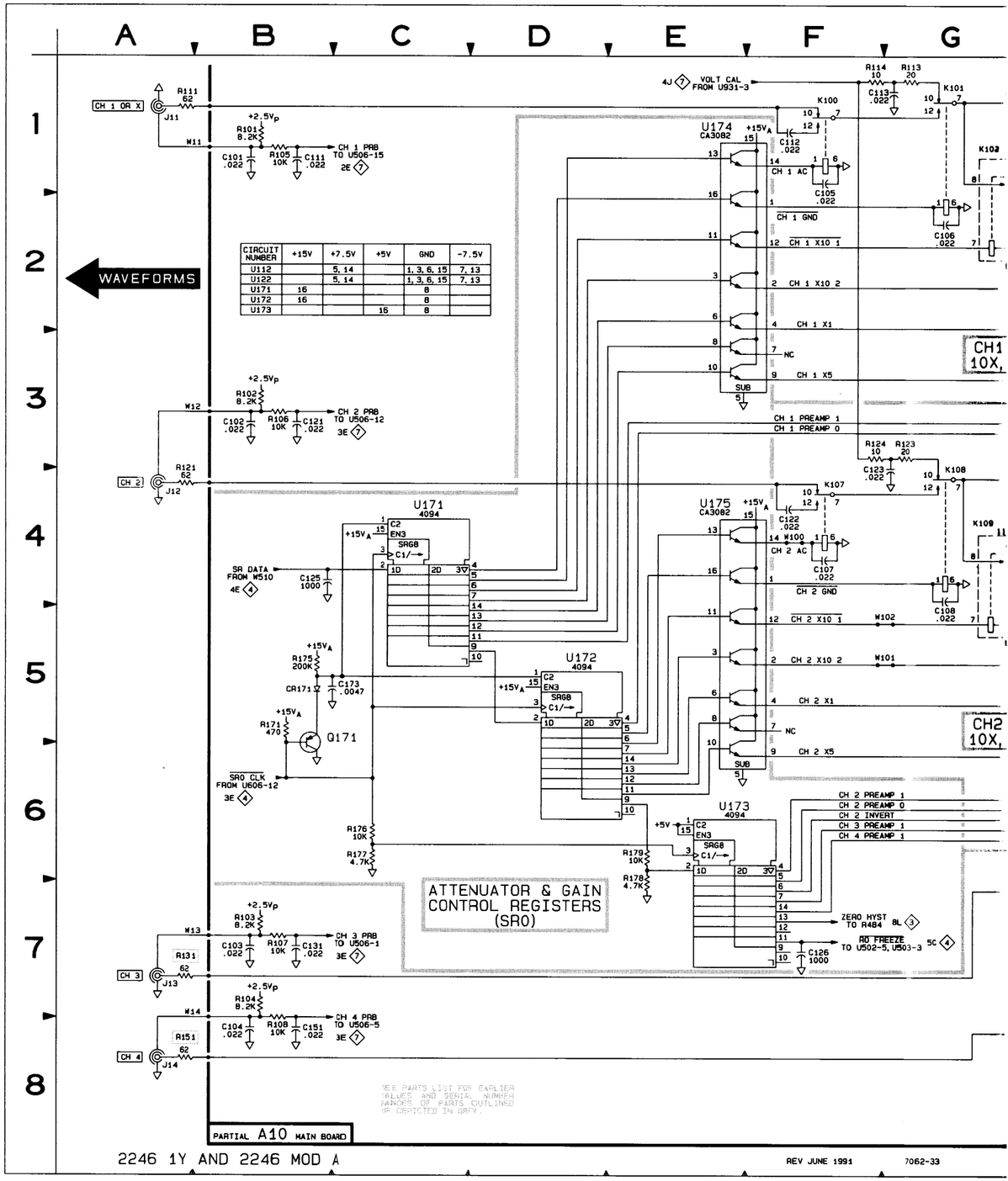

SCHEM LOCATION	BOARD LOCATION
8K	1C
8K	1C
8L	1C
8J	1B
8J	1B
5B	3B
5B	3B
6C	3C
6C	2C
6E	2C
6E	3C
6J	2B
8J	1B
3L	1C
6L	1A
1L	6C
4L	4C
4C	3B
5D	3B
6E	3C
1E	3A
4E	3C
1B	6A
3A	5A
7A	3A
7A	2A
4F	5C
5G	5C
5G	3B

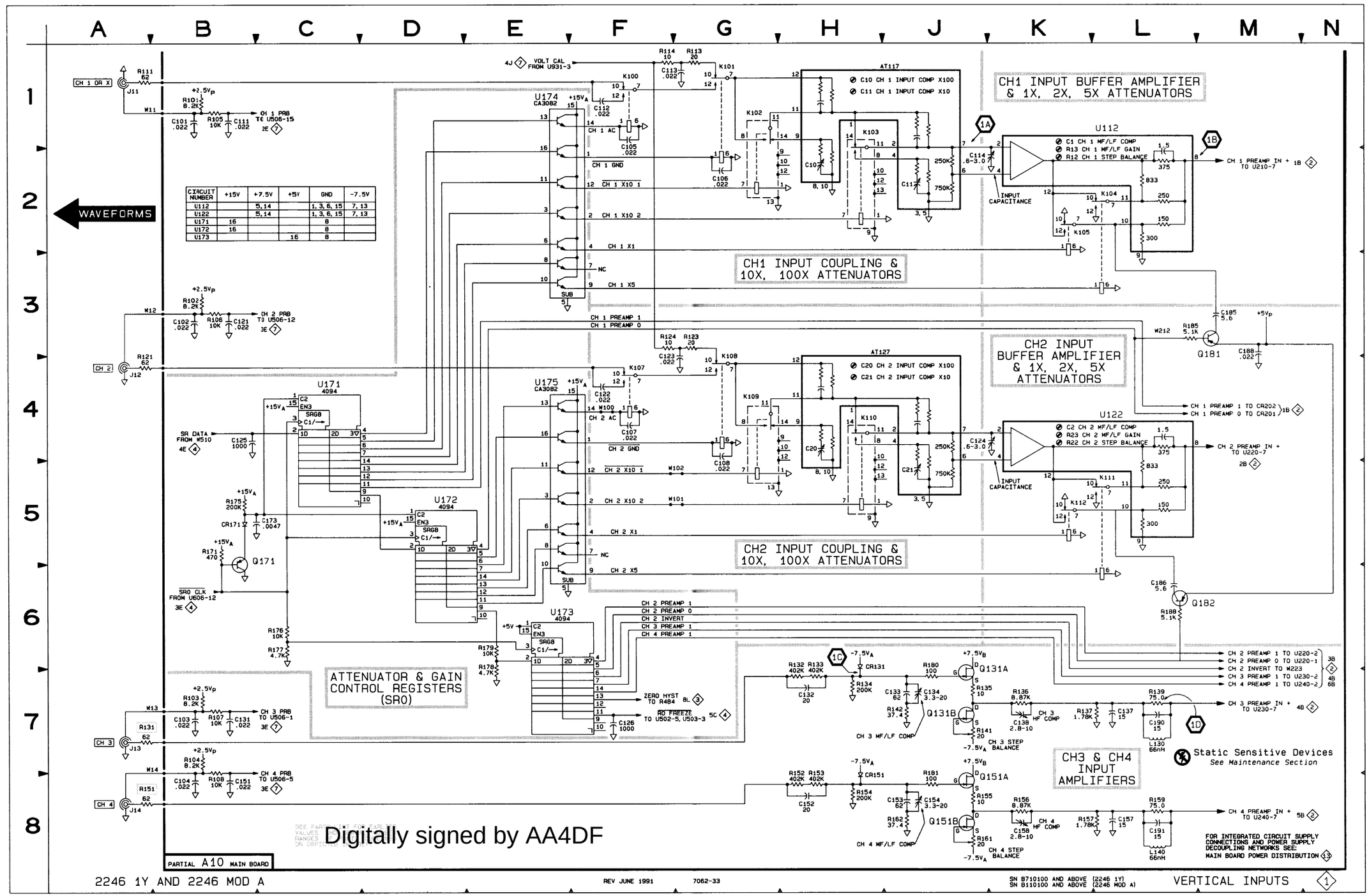

CIRCUIT NUMBER	+15V	+7.5V	+5V	GND	-7.5V
U112		5, 14		1, 3, 6, 15	7, 13
U122		5, 14		1, 3, 6, 15	7, 13
U171	16			8	
U172	16			8	
U173			16	8	

Digitally signed by AA4DF

VERTICAL INPUTS DIAGRAM 1
(SN B710099 AND BELOW, 2246 1Y
SN B110099 AND BELOW, 2246 MOD A)

ASSEMBLY A9

CIRCUIT NUMBER	SCHEM LOCATION	BOARD LOCATION	CIRCUIT NUMBER	SCHEM LOCATION	BOARD LOCATION	CIRCUIT NUMBER	SCHEM LOCATION	BOARD LOCATION	CIRCUIT NUMBER	SCHEM LOCATION	BOARD LOCATION
C185	3M	1C	Q182	6L	1A	VR101	3M	1B	W107	3M	1B
C186	6L	1A							W108	3M	1C
C188	3M	1B	R185	3L	1C	W105	6L	1A	W212	3L	1B
			R188	6L	1A	W106	3N	1B	W222	6L	1B
Q181	3M	1C	R189	3M	1B						

ASSEMBLY A10

CIRCUIT NUMBER	SCHEM LOCATION	BOARD LOCATION	CIRCUIT NUMBER	SCHEM LOCATION	BOARD LOCATION	CIRCUIT NUMBER	SCHEM LOCATION	BOARD LOCATION	CIRCUIT NUMBER	SCHEM LOCATION	BOARD LOCATION
AT117	1J	6B	C152	8H	1A	Q131A	7K	2B	R151	8A	2A
AT127	3H	4B	C153	8J	1A	Q131B	7J	2B	R152	8H	1A
			C154	8J	1B	Q151A	8K	1B	R153	8H	1A
C1	1K	6C	C157	8L	1C	Q151B	8J	1B	R154	8H	1A
C2	4K	4C	C158	8K	1C	Q171	5C	2B	R155	8J	1B
C10	2H	6B	C173	5C	3B				R156	8K	1C
C11	2J	6B	C190	7L	2C	R12	2K	6C	R157	8K	1C
C20	4H	4B	C191	8L	1C	R13	2K	6C	R159	8L	1C
C21	5J	4B				R22	4K	4C	R161	8J	1B
C101	1B	6A	CR131	6H	2B	R23	4K	4C	R162	8J	1B
C102	3B	4A	CR151	8H	1B	R101	1B	6A	R171	5B	3B
C103	7B	3A	CR171	5B	3B	R102	3B	7A	R175	5B	3B
C104	8B	1A				R103	7B	7A	R176	6C	3C
C105	1F	6A	J11	1A	6A	R104	7B	7A	R177	6C	2C
C106	2G	5A	J12	4A	4A	R105	1B	7A	R178	6E	2C
C107	4F	5A	J13	7A	3A	R106	3B	7A	R179	6E	3C
C108	5G	4A	J14	8A	1A	R107	7B	7B	R180	6J	2B
C111	1B	9C				R108	8B	7B	R181	8J	1B
C112	1F	6A	K100	1F	6A	R111	1A	6A			
C113	1F	5A	K101	1G	5A	R113	1G	5A	U112	1L	6C
C114	2J	5C	K102	1G	5B	R114	1F	5A	U122	4L	4C
C121	3B	10C	K103	1H	6B	R121	3A	4A	U171	4C	3B
C122	4F	4A	K104	2L	5D	R123	3G	3A	U172	5D	3B
C123	4F	3A	K105	2K	5D	R124	3F	3A	U173	6E	3C
C124	4J	4C	K107	4F	4A	R131	7A	2A	U174	1E	3A
C125	4B	1C	K108	4G	4A	R132	6H	2A	U175	4E	3C
C126	7F	1D	K109	4G	4B	R133	6H	2A			
C131	7B	10B	K110	4H	5B	R134	7H	2A	W11	1B	6A
C132	7H	2A	K111	5L	4D	R135	7J	2B	W12	3A	4A
C133	7J	2A	K112	5K	4D	R136	7K	2C	W13	7A	3A
C134	7J	2B				R137	7K	2C	W14	7A	1A
C137	7L	1C	L130	7L	2C	R139	7L	2C	W100	4F	5C
C138	7K	2C	L140	8L	1C	R141	7J	2B	W101	5G	5C
C151	8B	10C				R142	7J	2B	W102	5G	3B

Partial A10 also shown on diagrams 2, 3, 4, 5, 6, 7 and 13.

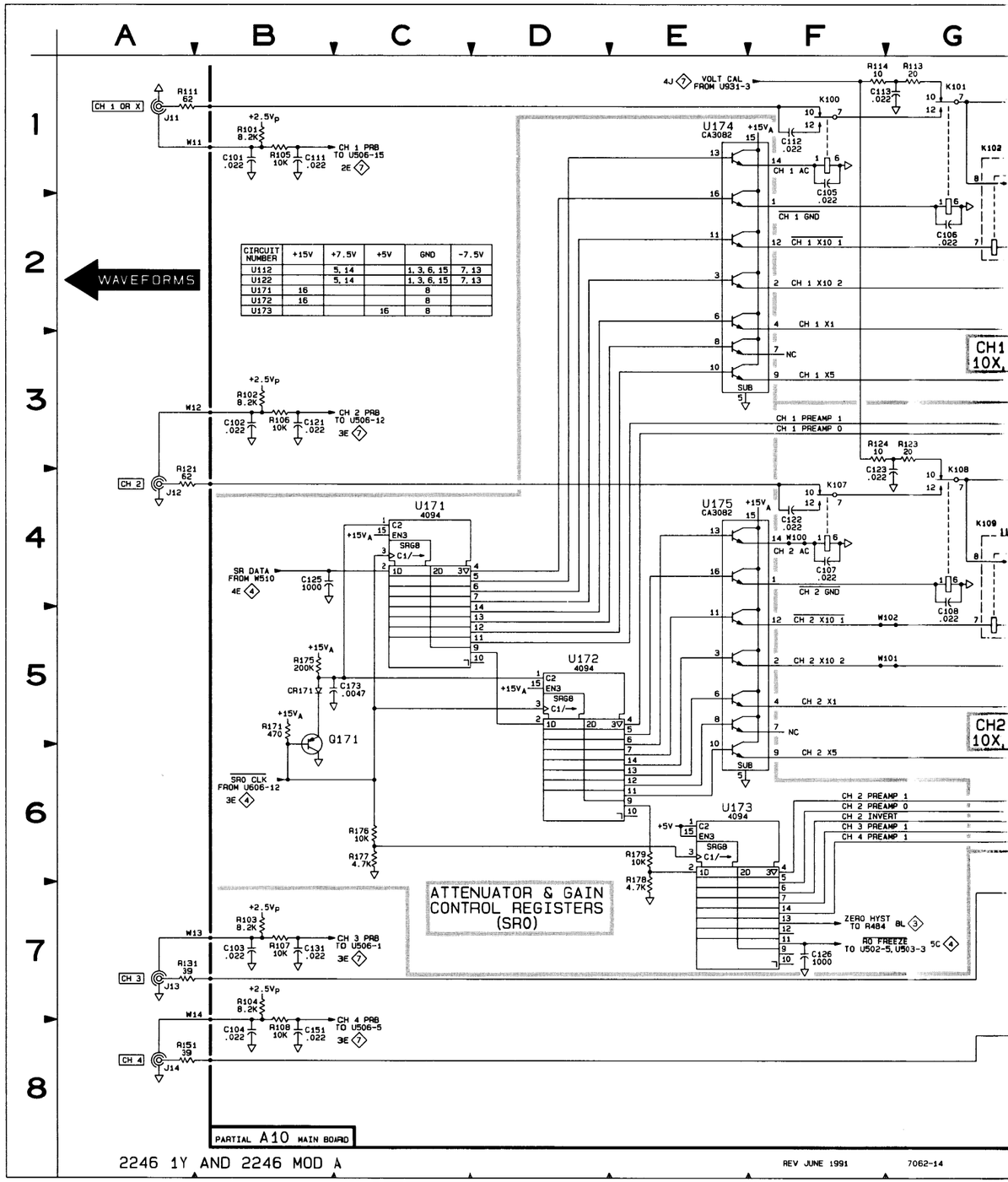

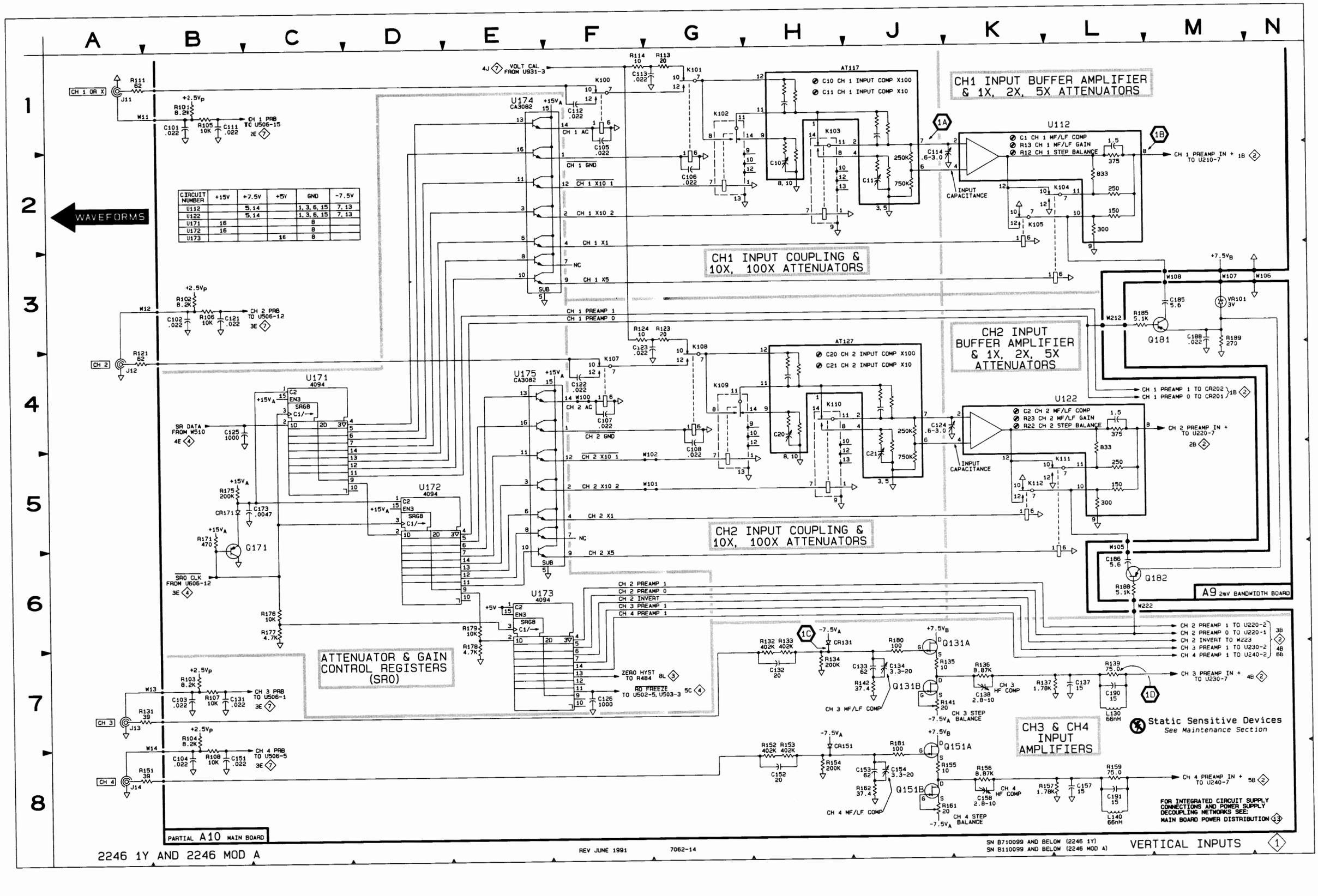

CIRCUIT NUMBER	+15V	+7.5V	+5V	GND	-7.5V
U112		5, 14		1, 3, 6, 15	7, 13
U122		5, 14		1, 3, 6, 15	7, 13
U171	16			8	
U172	16			8	
U173			16	8	

WAVEFORMS FOR DIAGRAM 2

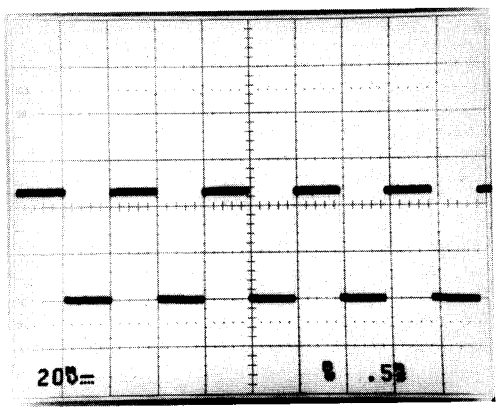

SET READOUT CONTROL CCW (OFF).

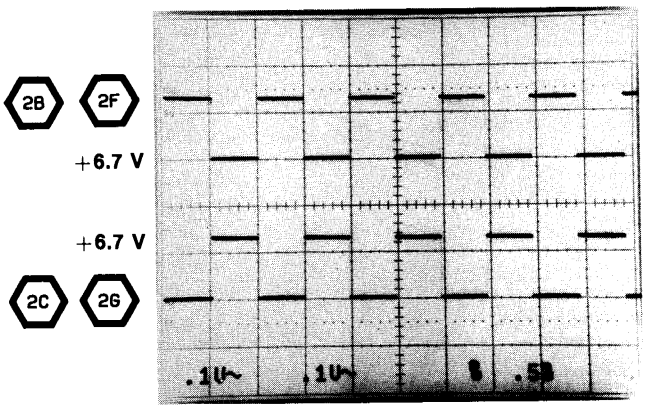

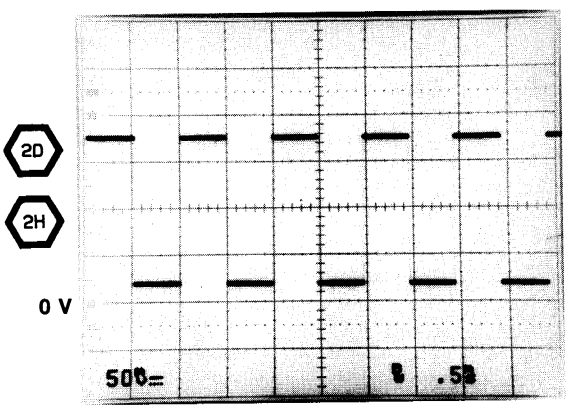

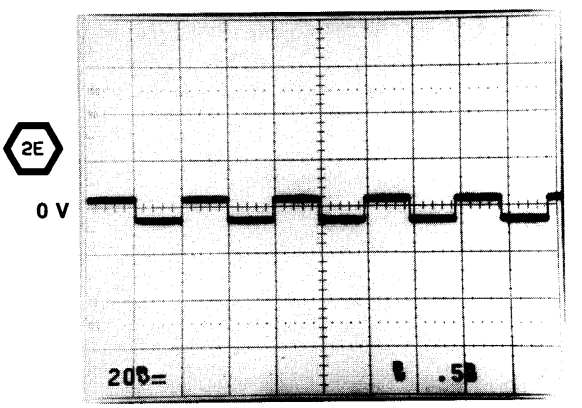

SET READOUT CONTROL CCW (OFF).

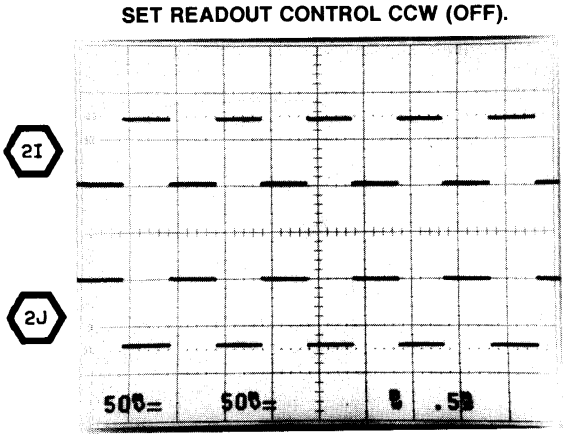

SET READOUT CONTROL CCW (OFF).

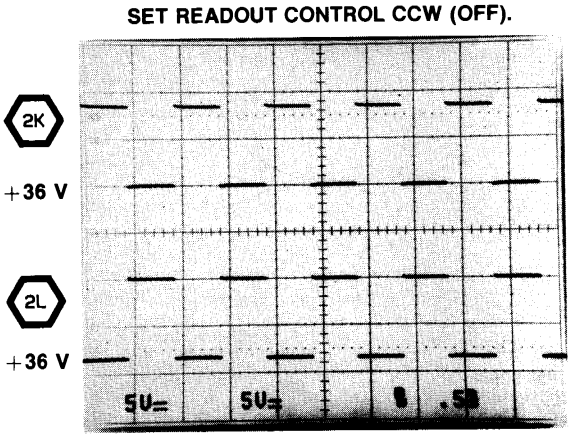

6555-40

VERTICAL PREAMPS AND OUTPUT AMPLIFIER DIAGRAM 2
(SN B715000 AND ABOVE, 2246 1Y
SN B120000 AND ABOVE, 2246 MOD A)

ASSEMBLY A10

CIRCUIT NUMBER	SCHEM LOCATION	BOARD LOCATION	CIRCUIT NUMBER	SCHEM LOCATION	BOARD LOCATION	CIRCUIT NUMBER	SCHEM LOCATION	BOARD LOCATION	CIRCUIT NUMBER	SCHEM LOCATION	BOARD LOCATION
C139	4C	2C	Q250	3G	4E	R254	3G	5F	R727	5K	10K
C159	5C	1C	Q251	4G	4F	R255	3G	5F	R728	5K	10H
C201	7C	4G	Q252	3J	4E	R256	2G	6F	R729	5K	10H
C202	7C	4H	Q253	4J	4F	R260	7G	5E	R730	5K	9K
C203	7C	4H	Q284	6F	6E	R261	7G	5E	R731	3M	9H
C204	8C	5H	Q285	6F	5E	R262	3F	5F	R732	4M	10H
C210	1C	6E	Q701	3M	9J	R263	4F	5F	R1210	1E	5E
C211	2D	5E	Q702	4M	10J	R264	3F	5F	R1211	1E	5E
C212	1E	5E	Q703	2M	9K	R265	4F	5F	R1220	2E	4E
C213	2E	5E	Q704	6K	11H	R266	2G	4F	R1221	2E	4E
C218	6B	10G				R267	2G	4F	R1230	4E	3E
C220	3C	5D	R115	1D	5D	R268	4J	5F	R1231	4E	3E
C221	3D	4E	R125	2D	4D	R269	2J	5F	R1240	5E	2E
C222	3E	4E	R138	4C	2C	R270	3J	4F	R1241	5E	2E
C223	3E	4E	R140	4D	2C	R271	4H	4F	R1250	3H	5F
C228	7B	10G	R158	5C	1C	R272	3H	4F	R1251	4H	5F
C232	4E	2E	R160	5D	1C	R273	3H	4G	R1284	5F	5E
C233	5E	2E	R201	6E	5G	R274	3J	3E	R1285	5F	5E
C238	7B	10G	R202	7E	5G	R275	3G	4F			
C242	5E	1E	R203	8E	5G	R276	4G	4F	RT201	2H	4F
C243	6E	1E	R204	8E	5G	R277	3G	4F			
C248	8B	11G	R205	7D	6H	R278	3J	3F	U201	8D	5H
C258	8C	4G	R206	7E	5G	R279	4J	3F	U202	7D	5G
C268	7D	9G	R207	7C	9G	R280	3J	3F	U203A	6B	10G
C271	3H	4F	R209	7C	1M	R281	4J	3F	U203B	7B	10G
C272	3H	4F	R210	1E	6E	R284	6E	6F	U203C	8B	10G
C273	3H	4F	R211	1E	6E	R285	6G	6E	U203D	8B	10G
C274	3H	4F	R212	2C	2L	R286	7F	5G	U210	1D	5E
C275	4G	4F	R213	2C	2M	R287	7F	5F	U220	2D	4E
C491	2E	2F	R214	2C	6H	R288	7G	6F	U230	3D	3E
C492	3E	2F	R215	7C	6N	R289	6G	5F	U240	5D	2E
C493	4E	2E	R216	7C	8G	R290	7F	6F	U260	2F	5F
C494	6E	2F	R217	7C	7G	R291	7F	5F	U280	8F	5F
C706	3L	10J	R218	2C	5E	R292	8E	5F	U701	2L	10J
C707	6L	9J	R219	1C	5C	R293	8F	5F	U702	1M	9K
C711	3L	10J	R220	2E	4E	R294	8G	5G	U801B	8B	7H
C712	4L	10J	R221	2E	4E	R295	8G	5G			
C811	8B	7J	R222	3C	2L	R296	7F	6F	W19	4M	10H
C1250	2H	5F	R223	3C	2M	R299	2H	4F	W20	3M	9H
C1251	4H	5F	R224	3C	6H	R702	5K	9J	W200	3C	6G
			R225	1C	8C	R703	5K	11J	W201	2C	6G
CR201	2C	5C	R227	2C	8C	R706	3K	9K	W203	7D	6H
CR202	1C	5C	R228	3C	4E	R707	4K	10K	W204	7D	6H
CR260	3J	4F	R229	1C	5D	R708	3M	10H	W205	7B	6G
CR261	4J	4F	R230	4E	3E	R710	1L	10K	W206	6B	6G
CR262	2J	4F	R231	4E	3E	R711	3L	10J	W207	7B	6G
CR263	2J	4F	R232	5C	1L	R712	4L	10J	W208	8B	6G
			R233	5C	2M	R715	1L	10K	W209	8C	6G
DL21	3K	3F	R234	4C	6H	R716	2L	10K	W210	8B	10G
			R235	5D	3E	R717	2M	9K	W223	3C	5D
L701	5L	9J	R238	5C	2D	R718	1M	9K	W231	4E	2E
L702	6L	10J	R240	5E	2E	R719	3M	10H	W232	4E	2E
L703	3M	9H	R241	5E	2E	R720	4M	10H	W415A	1E	5E
L704	4M	10H	R242	6C	1L	R721	1L	9K	W415B	1E	3F
			R243	6C	2M	R722	2L	9K	W416A	3E	3E
P19	4N	10H	R244	6C	6H	R724	4K	9K	W416B	3E	3E
P20	3N	9H	R248	6D	2E	R725	4K	9K	W815	8B	8G
			R249	8E	5G	R726	6K	11J			

Partial A10 also shown on diagrams 1, 3, 4, 5, 6, 7 and 13.

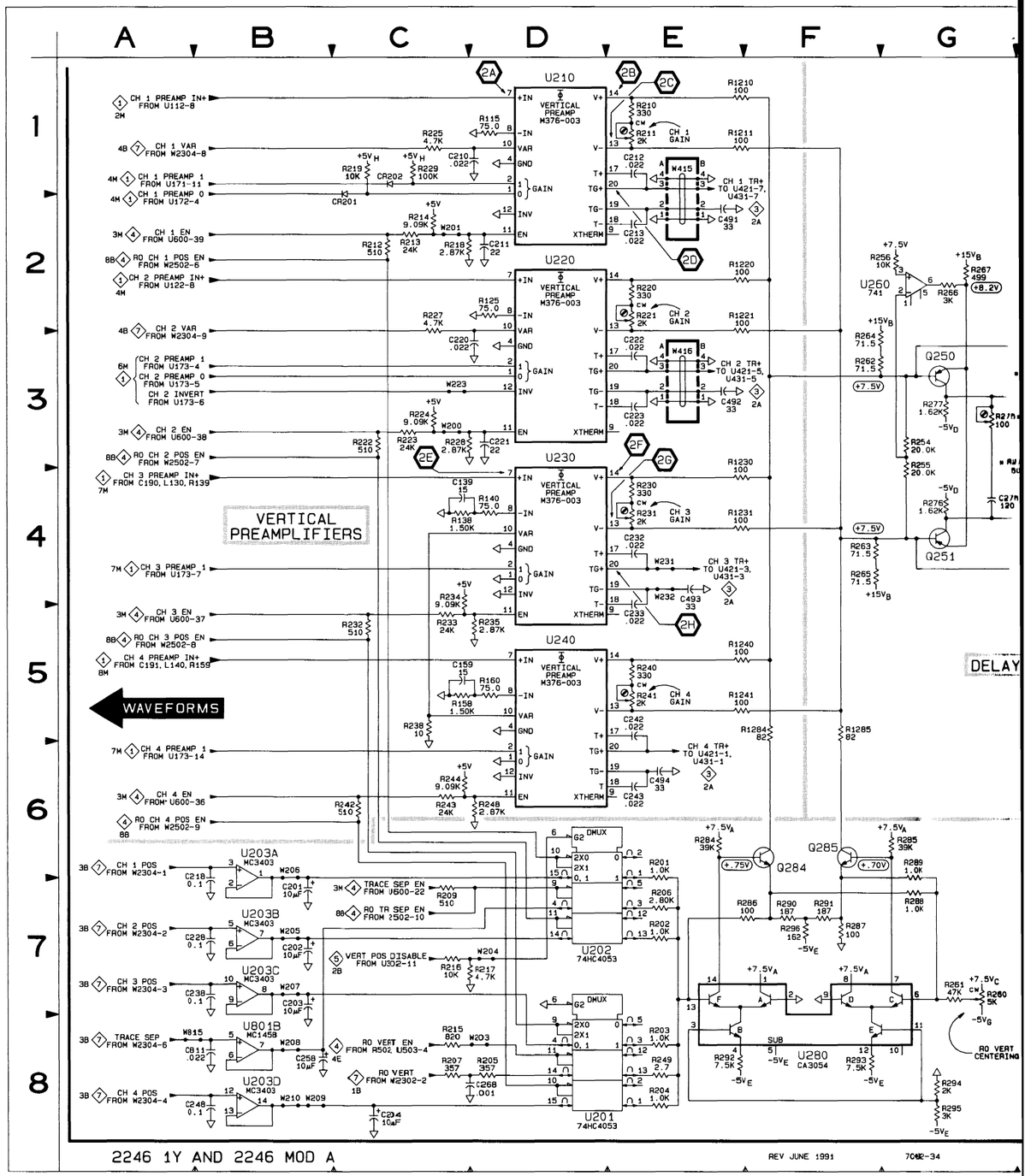

CIRCUIT NUMBER	+15V	+7.5V	+5V	GND	-5V
U201			16	8	7
U202			16	8	7
U203			4		11
U210		3			5, 6, 15, 16
U220		3			5, 6, 15, 16
U230		3			5, 6, 15, 16
U240		3			5, 6, 15, 16
U260	7			4	
U701	5		4	8, 10	14
U702			8		4
U801	8				4

VERTICAL PREAMPLIFIERS

WAVEFORMS

DELAY-LINE DRIVER

VERTICAL POSITION SWITCHING

VERTICAL COMPARATOR

VERTICAL OUTPUT AMPLIFIER

Static Sensitive Devices
See Maintenance Section

FOR INTEGRATED CIRCUIT SUPPLY CONNECTIONS AND POWER SUPPLY DECOUPLING NETWORKS SEE: MAIN BOARD POWER DISTRIBUTION 13

PARTIAL A10 MAIN BOARD

2246 1Y AND 2246 MOD A

REV JUNE 1991

7062-34

SN B715000 AND ABOVE (2246 1Y)
SN B120000 AND ABOVE (2246 MOD A)

VERTICAL PREAMPS AND OUTPUT AMPLIFIER 2

VERTICAL PREAMPS AND OUTPUT AMPLIFIER DIAGRAM 2
(SN B714999 AND BELOW, 2246 1Y
SN B119999 AND BELOW, 2246 MOD A)

ASSEMBLY A10

CIRCUIT NUMBER	SCHEM LOCATION	BOARD LOCATION	CIRCUIT NUMBER	SCHEM LOCATION	BOARD LOCATION	CIRCUIT NUMBER	SCHEM LOCATION	BOARD LOCATION	CIRCUIT NUMBER	SCHEM LOCATION	BOARD LOCATION
C139	4C	2C	Q251	4G	4F	R250D	3E	5E	R712	4L	10J
C159	5C	1C	Q252	3J	4E	R250E	2E	5E	R715	1L	10K
C201	7C	4G	Q253	4J	4F	R250F	1E	5E	R716	2L	9K
C202	7C	4G	Q284	6F	5E	R250G	5F	5E	R717	2M	9K
C203	7C	4H	Q285	6F	5E	R251A	4H	5F	R718	1M	9K
C204	8C	5H	Q701	3M	9H	R251B	5H	5F	R719	3M	9H
C210	1C	6D	Q702	4M	10H	R251C	5E	5F	R720	4M	10H
C211	2D	5E	Q703	2M	9K	R251D	4E	5F	R721	1L	9K
C212	1E	5E	Q704	6K	10H	R251E	2E	5F	R722	2L	9K
C213	2E	5E				R251F	1E	5F	R724	4K	9K
C218	6B	9G	R115	1D	5D	R251G	5F	5F	R725	4K	9K
C220	3C	4D	R125	2D	4D	R254	3G	5F	R726	6K	10J
C221	3D	4E	R138	4C	2C	R255	3G	5F	R727	5K	10J
C222	3E	4E	R140	4D	2C	R256	2G	6F	R728	5K	10H
C223	3E	4E	R158	5C	1C	R260	7G	5E	R729	5K	10H
C228	7B	10G	R160	5D	1C	R261	7G	5E	R730	5K	9K
C232	4E	2E	R201	6E	5G	R262	3F	5F	R731	3M	9H
C233	5E	2E	R202	7E	5G	R263	4F	5F	R732	4M	10H
C238	7B	10G	R203	8E	5G	R264	3F	5F			
C242	5E	1E	R204	8E	5G	R265	4F	5F	RT201	2H	6G
C243	6E	1E	R205	7D	5G	R266	2G	4F			
C248	8B	10G	R206	8E	5G	R267	2G	4F	U201	8D	5H
C258	8C	4H	R207	7C	9G	R268	4J	5F	U202	7D	5G
C268	7D	9G	R209	7C	5H	R269	2J	5F	U203A	6B	10G
C271	3H	3F	R210	1E	5E	R270	3J	4F	U203B	7B	10G
C272	3H	4F	R211	1E	5E	R271	4H	3F	U203C	7B	10G
C273	3H	4F	R212	2C	3L	R272	3H	4F	U203D	8B	10G
C274*	3H	4F	R213	2C	4M	R273	3H	4F	U210	1D	5D
C275	4G	4F	R214	2C	5H	R274	3J	3E	U220	2D	4D
C491	2E	2F	R215	7C	6M	R275	3G	4E	U230	3D	3E
C492	3E	2F	R218	2C	5E	R276	4G	4F	U240	5D	2E
C493	4E	2F	R219	1C	5C	R277	3G	3F	U260	2F	5F
C494	6E	2F	R220	2E	4E	R278	3J	3E	U280	8F	5F
C706	3L	10H	R221	2E	4E	R279	4J	3F	U701	2L	9J
C707	6L	9J	R222	3C	3M	R280	3J	3F	U702	1M	9K
C711	3L	9J	R223	3C	4M	R281	4J	3F	U801B	8B	7H
C712	4L	10J	R224	3C	5H	R284	6E	6E			
C811	8B	6J	R225	1C	8C	R285	6G	5E	W19	4M	10H
			R227	2C	8C	R286	7F	5G	W20	3M	9H
CR201	2C	5C	R228	3C	4E	R287	7F	5F	W200	3C	5G
CR202	1C	5C	R229	1C	5D	R288	7G	6F	W201	2C	5G
CR260	3J	4F	R230	4E	3E	R289	6G	5F	W202	7E	4G
CR261	4J	4F	R231	4E	3E	R290	7F	5F	W203	7D	5H
CR262	2J	4F	R232	5C	3L	R291	7F	5F	W205	7B	5G
CR263	2J	4F	R233	5C	4M	R292	8E	5F	W206	6B	5G
			R234	4C	5H	R293	8F	5F	W207	7B	5G
DL21	3K	3F	R235	5D	3E	R294	8G	4F	W208	8B	5G
			R238	5C	2D	R295	8G	5F	W209	8C	5G
L701	5L	9J	R240	5E	2E	R296	7F	5F	W210	8B	10G
L702	6L	10J	R241	5E	2E	R299	2H	6F	W223	3C	4D
L703	3M	9H	R242	6C	3M	R702	5K	9J	W231	4E	2E
L704	4M	10H	R243	6C	4L	R703	5K	10J	W232	4E	2E
			R244	6C	5H	R706	3K	9K	W415A	1E	4E
P19	4N	10H	R248	6D	2E	R707	4K	10K	W415B	1E	2F
P20	3N	9H	R250A	2H	5E	R708	3M	9H	W416A	3E	3E
			R250B	3H	5E	R710	1L	10K	W416B	3E	2E
Q250	3G	4E	R250C	5E	5E	R711	3L	9J	W815	8B	8G

Partial A10 also shown on diagrams 1, 3, 4, 5, 6, 7 and 13.

***See Parts List for serial number ranges.**

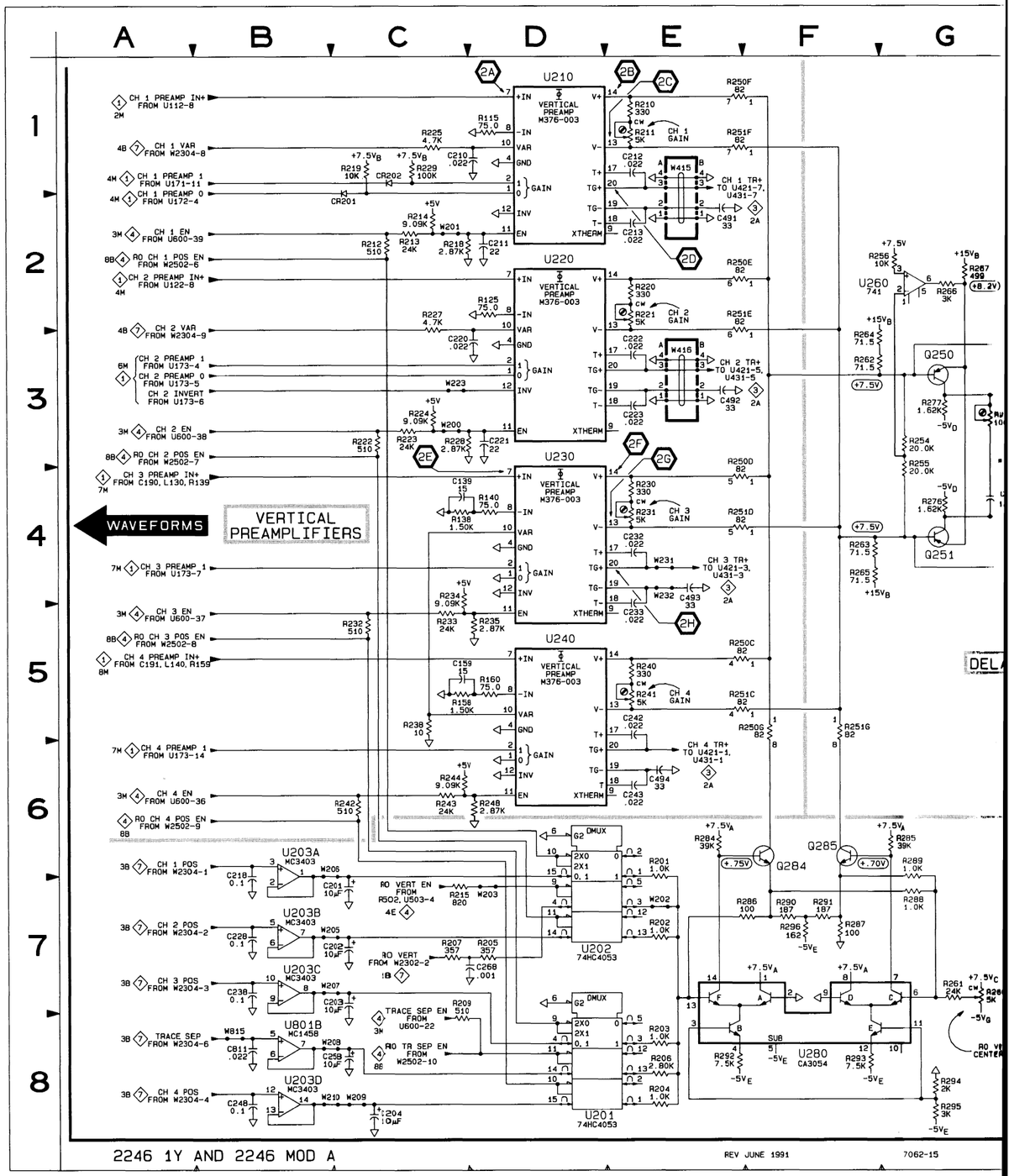

CIRCUIT NUMBER	+15V	+7.5V	+5V	GND	-5V
U201			16	8	7
U202			16	8	7
U203			4		11
U210		3			5, 6, 15, 16
U220		3			5, 6, 15, 16
U230		3			5, 6, 15, 16
U240		3			5, 6, 15, 16
U260	7			4	
U701	5		4	8, 10	14
U702			8		4
U801	8				4

VERTICAL PREAMPLIFIERS

VERTICAL COMPARATOR

DELAY-LINE DRIVER

VERTICAL OUTPUT AMPLIFIER

VERTICAL POSITION SWITCHING

WAVEFORMS

* DLY LINE COMP ADJUSTMENTS

Static Sensitive Devices
See Maintenance Section

FOR INTEGRATED CIRCUIT SUPPLY CONNECTIONS AND POWER SUPPLY DECOUPLING NETWORKS SEE: MAIN BOARD POWER DISTRIBUTION 13

PARTIAL A10 MAIN BOARD

2246 1Y AND 2246 MOD A

REV JUNE 1991

7062-15

SN B714999 AND BELOW (2246 1Y)
SN B119999 AND BELOW (2246 MOD A)

VERTICAL PREAMPS AND OUTPUT AMPLIFIER 2

WAVEFORMS FOR DIAGRAM 3

3A
3B
0 V

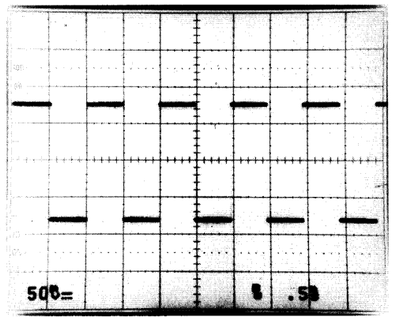

3C
0 V

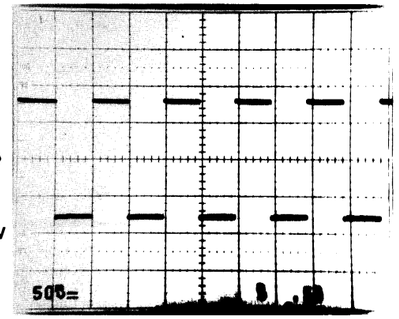

3D
0 V

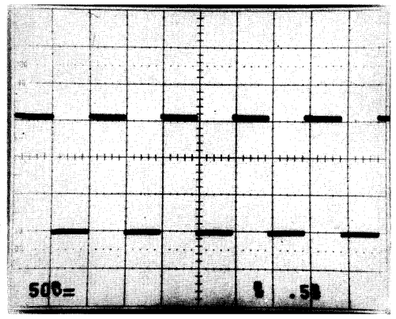

SET HORIZONTAL MODE TO ALT.

3E
+3.6 V

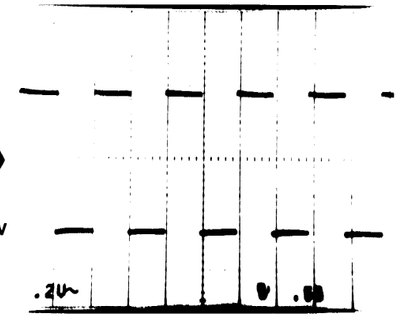

CONNECT 4-DIVISION COMPOSITE VIDEO SIGNAL. SET TRIGGER MODE TO TV FIELD.

3F
0 V

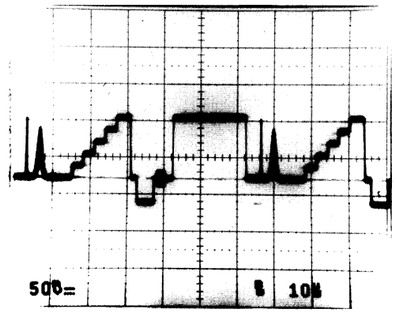

CONNECT 4-DIVISION COMPOSITE VIDEO SIGNAL. SET TRIGGER MODE TO TV FIELD.

3G
0 V

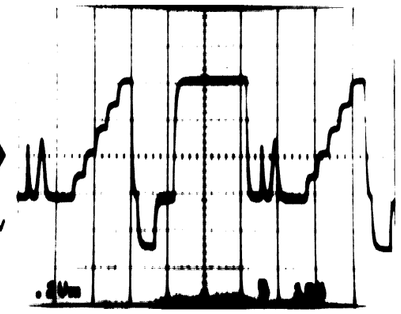

MORE

CONNECT 4-DIVISION COMPOSITE VIDEO SIGNAL. SET SLOPE TO ⌞ (NEGATIVE-GOING) FOR BOTH 2245A AND TEST OSCILLOSCOPE.

3H
0 V

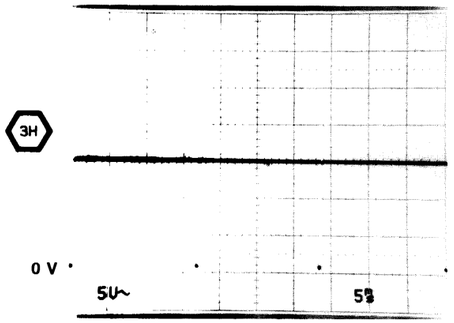

CONNECT 4-DIVISION COMPOSITE VIDEO SIGNAL. SET TRIGGER MODE TO TV FIELD.

3I
0 V

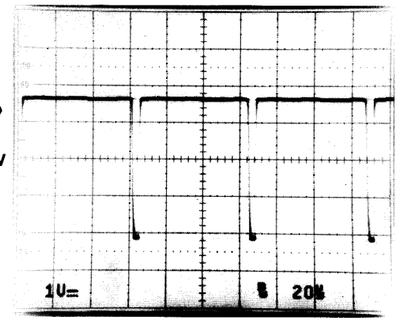

SET SLOPE TO ⌞ (NEGATIVE-GOING) FOR BOTH 2245A AND TEST OSCILLOSCOPE.

3J
0 V

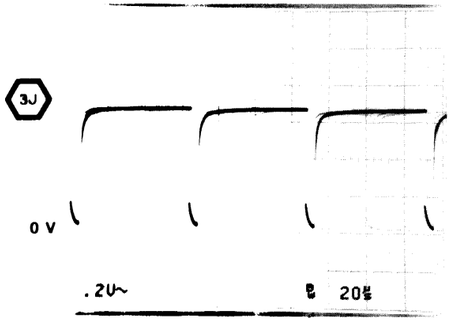

3K
0 V

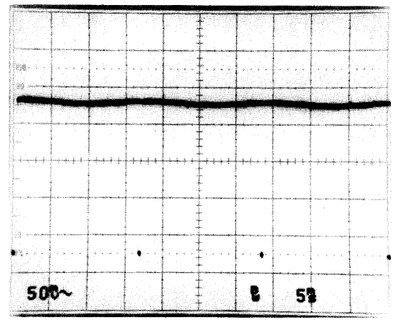

CONNECT 4-DIVISION COMPOSITE VIDEO SIGNAL. SET TRIGGER MODE TO TV FIELD. SET SLOPE TO ⌞ (NEGATIVE-GOING) FOR BOTH 2245A AND TEST OSCILLOSCOPE.

3L
0 V

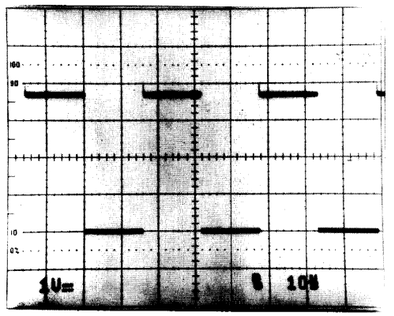

DIAGNOSTIC EXERCISE TIME REF AT 5 μs

A AND B TRIGGER SYSTEM DIAGRAM 3
(SN B710100 AND ABOVE, 2246 1Y
SN B110100 AND ABOVE, 2246 MOD A)

ASSEMBLY A10

CIRCUIT NUMBER	SCHEM LOCATION	BOARD LOCATION	CIRCUIT NUMBER	SCHEM LOCATION	BOARD LOCATION	CIRCUIT NUMBER	SCHEM LOCATION	BOARD LOCATION	CIRCUIT NUMBER	SCHEM LOCATION	BOARD LOCATION
C421	1H	2G	Q470	5K	1H	R463	6L	1F	R1135	4F	4H
C422	2H	3H	Q474	7K	1F	R470	6L	1G	R1136	4F	4H
C423	2H	2G	Q480	8L	1F	R471	5K	1H	R1142	3G	4G
C424	2H	3G	Q1101	5E	5J	R472	5K	1H	R1143	4G	4H
C425	2J	2G	Q1102	4E	5J	R473	6K	1H	R1144	3H	4H
C426	2D	3H	Q1103	5F	5J	R474	6K	1H	R1145	3H	4H
C432	1L	2G	Q1104	3E	5J	R475	8K	1F	R1150	2D	3G
C444	2L	2F	Q1105	3E	5J	R476	8L	1F	R1154	6F	4G
C447	3L	2F	Q1106	3F	5J	R477	8L	1F	R1155	6F	4G
C451	6G	1G				R478	7L	1F	R1162	5A	5K
C452	7H	2H	R401	2C	3F	R479	7L	1F	R1163	5A	5K
C453	8G	1G	R402	2C	3F	R483	3B	3F	R1170	3A	4J
C454	7G	1G	R403	3L	3J	R484	8K	1E			
C455	6H	1G	R410	1M	3G	R485	8L	1F	U421A	1C	3F
C462	6L	1G	R411	1M	3G	R486	8L	1E	U421B	1K	3F
C463	6L	1F	R412	2M	3G	R487	8L	1F	U421C	1L	3F
C474	6K	1F	R413	2M	3G	R490	3B	2J	U431A	7D	2F
C476	7K	1F	R414	6M	3H	R491	4B	3J	U431B	6J	2F
C477	7L	1F	R415	6L	2G	R492	4B	3J	U431C	6L	2F
C478	8K	1E	R416	6L	2G	R493	4B	2J	U441A	4K	1H
C483	3B	2F	R417	6M	2H	R494	7B	2J	U441B	5K	1H
C484	4B	3G	R420	2E	2G	R495	7B	2J	U441C	7K	1H
C485	8B	2H	R421	1H	2G	R496	8B	2J	U441D	4K	1H
C487	3B	3F	R422	2H	2G	R497	8B	2J	U441E	2K	1H
C488*	8B	2G	R423	2H	3G	R498	3B	3J	U441F	1K	1H
C489	4B	3G	R424	2H	3G	R1103	3D	3G	U442A	6M	2H
C496*	8B	2G	R425	2H	2G	R1104	3D	4G	U442B	4K	2H
C1103	3A	4J	R426	2D	2H	R1105	8J	5K	U442C	1M	2H
C1105	3E	5K	R430	2K	2G	R1106	8J	5K	U1101A	2E	4G
C1106	3H	4G	R431	1K	2F	R1110	5E	4K	U1101B	6G	4G
C1107	3H	4G	R432	2L	2G	R1111	4E	5K	U1102A	3G	4G
C1110	3D	3G	R440	1L	2G	R1112	4E	4K	U1102B	3H	4G
C1111	3H	4G	R441	1L	2H	R1113	4E	5K	U1103	5B	5K
C1114	5E	4J	R442	1K	2H	R1114	4F	5K	U1104A	3J	4H
C1130	4G	4G	R443	1K	2H	R1115	4F	4J	U1104B	4G	4H
C1143*	4H	4H	R444	2K	3H	R1116	5F	4J	U1104C	6H	4H
C1154	6F	4G	R445	2L	2F	R1117	4F	3J	U1106A	2B	5L
C1155	6G	4G	R446	2M	3F	R1118	5F	4J	U1106B	8J	5L
			R447	3L	2F	R1120	3E	5K	U1106C	4J	5L
CR432	1K	2G	R448	3L	2F	R1121	4E	5K			
CR462	6K	1G	R449	2M	3F	R1122	3E	5K	W401	2D	4H
			R450	6E	1G	R1123	4E	5K	W406	3J	3H
DL22	6M	2K	R451	7G	1G	R1124	4F	5K	W413	1M	3J
DL22	6M	2H	R452	7G	1G	R1125	3F	5J	W414	2M	3J
			R453	8H	2G	R1126	3F	5J	W1101	5C	5K
L426	2D	3H	R454	7H	2G	R1127	4F	3J	W1102	3D	3J
L432	2L	2G	R455	6D	1H	R1128	3F	5J	W1103	6C	5K
L462	6K	1G	R456	6F	1G	R1131	3G	4G	W1106	8J	5L
			R460	6K	1G	R1132	3H	4G	W1108	3K	5K
Q440	1L	2H	R461	6K	1G	R1133	3H	4H			
Q444	2L	2F	R462	6L	1G	R1134	3J	4H			

Partial A10 also shown on diagrams 1, 2, 4, 5, 6, 7 and 13.

***See Parts List for serial number ranges.**

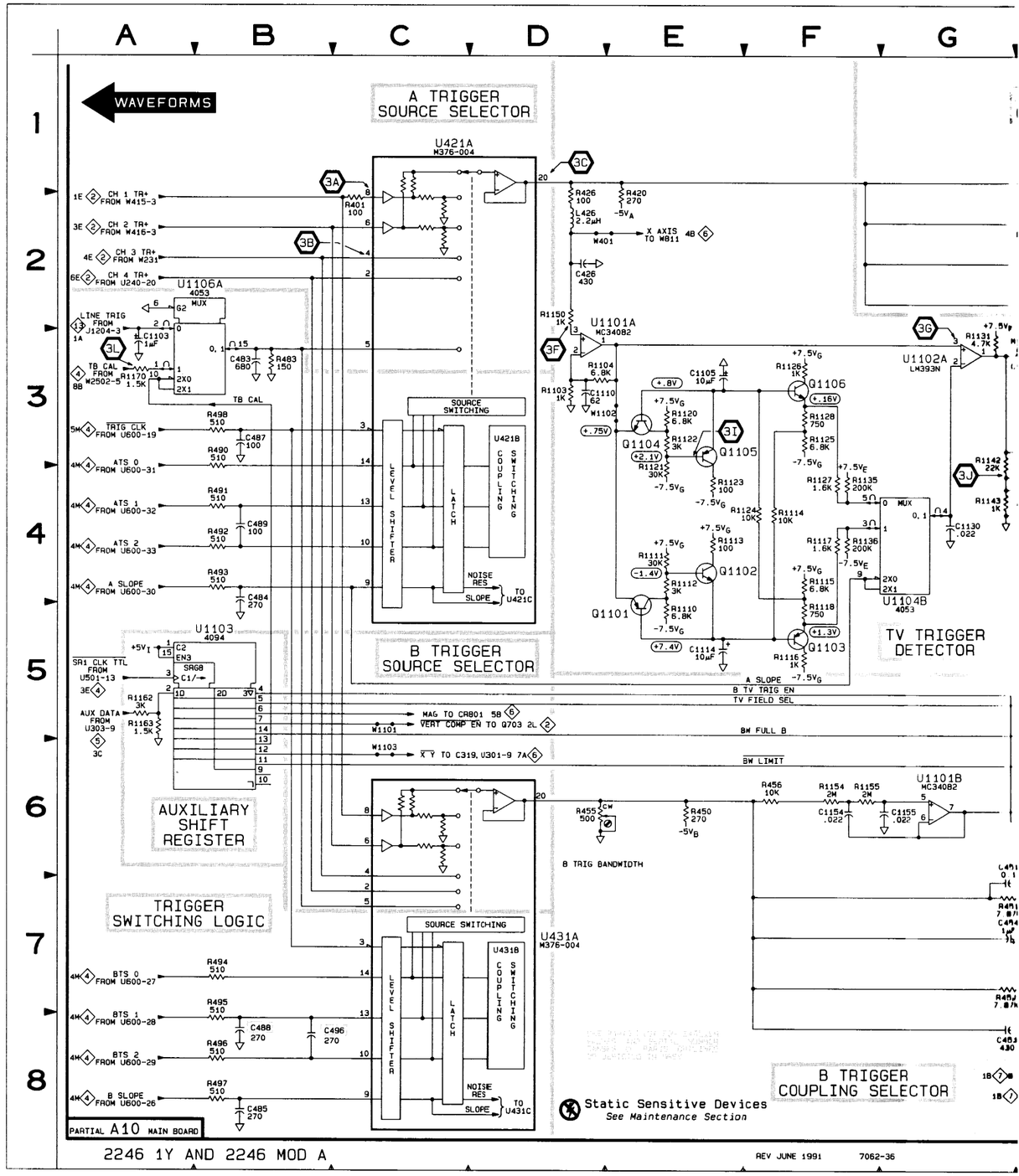

SCHEM LOCATION	BOARD LOCATION
4F	4H
4F	4H
3G	4G
4G	4H
3H	4H
3H	4H
2D	3G
6F	4G
6F	4G
5A	5K
5A	5K
3A	4J
1C	3F
1K	3F
1L	3F
7D	2F
6J	2F
6L	2F
4K	1H
5K	1H
7K	1H
4K	1H
2K	1H
1K	1H
6M	2H
4K	2H
1M	2H
2E	4G
6G	4G
3G	4G
3H	4G
5B	5K
3J	4H
4G	4H
6H	4H
2B	5L
8J	5L
4J	5L
2D	4H
3J	3H
1M	3J
2M	3J
5C	5K
3D	3J
6C	5K
8J	5L
3K	5K

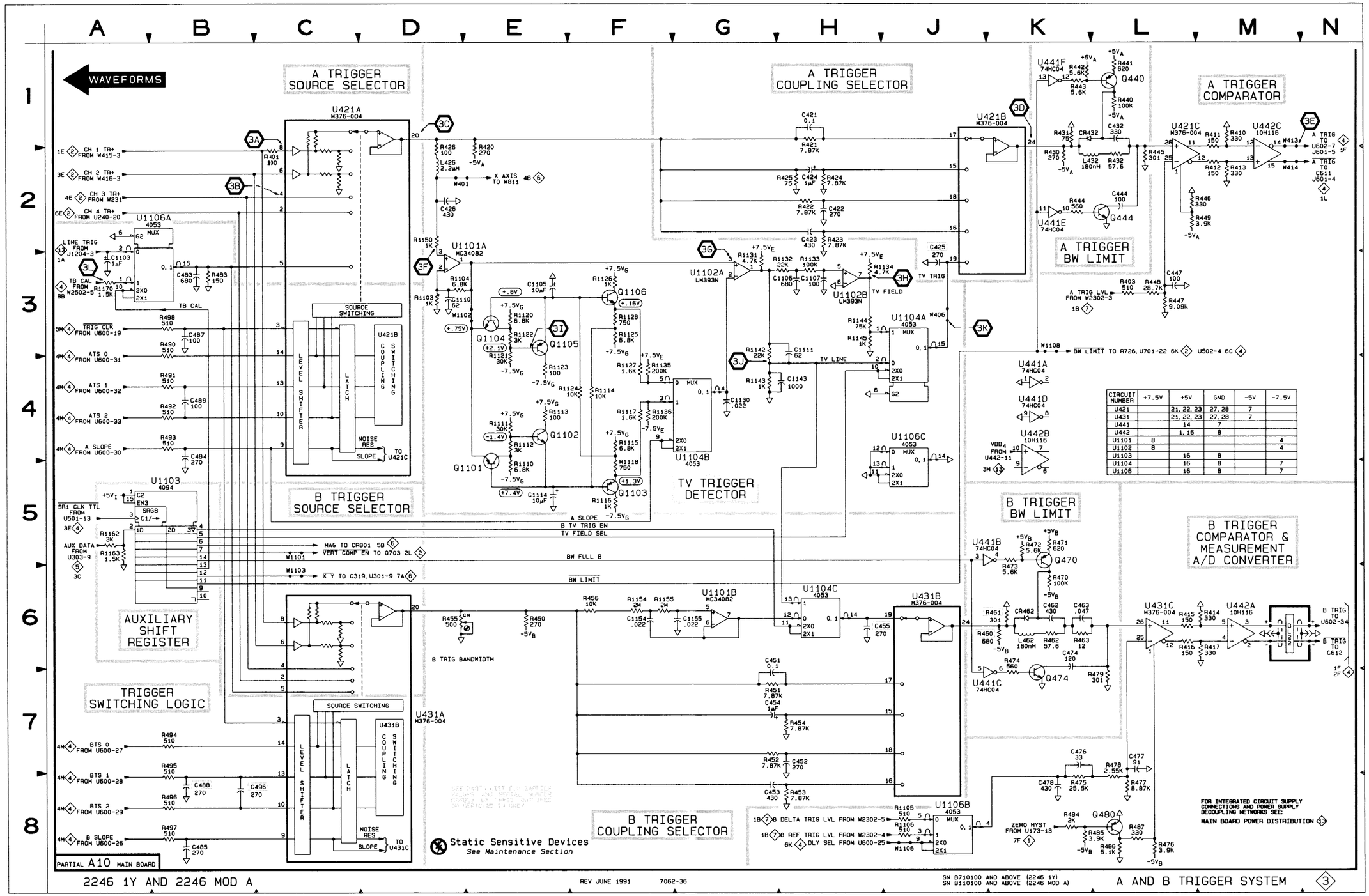

CIRCUIT NUMBER	+7.5V	+5V	GND	-5V	-7.5V
U421		21, 22, 23	27, 28	7	
U431		21, 22, 23	27, 28	7	
U441		14	7		
U442		1, 16	8		
U1101	8				4
U1102	8				4
U1103		16	8		
U1104		16	8		7
U1106		16	8		7

PARTIAL A10 MAIN BOARD

A AND B TRIGGER SYSTEM DIAGRAM 3
(SN B710099 AND BELOW, 2246 1Y
SN B110099 AND BELOW, 2246 MOD A)

ASSEMBLY A10

CIRCUIT NUMBER	SCHEM LOCATION	BOARD LOCATION	CIRCUIT NUMBER	SCHEM LOCATION	BOARD LOCATION	CIRCUIT NUMBER	SCHEM LOCATION	BOARD LOCATION	CIRCUIT NUMBER	SCHEM LOCATION	BOARD LOCATION
C421	1H	4G	Q1103	5F	1N	R474	6K	1H	R1150	2D	1M
C422	2H	4H	Q1104	3E	2M	R476	8M	1F	R1154	6F	1M
C423	2H	4G	Q1105	3F	2N	R477	8M	2H	R1155	6G	1M
C424	2H	4G	Q1106	3F	2N	R478	8L	2H	R1162	5A	1K
C425	2J	3G				R479	7L	1H	R1163	5A	2K
C426	2E	2H	R401	2C	3G	R483	3B	1G	R1170	3A	1K
C432	1L	3H	R402	1C	3G	R484	8L	1F			
C444	2L	3G	R410	1M	3F	R485	8L	1F	U421A	1D	3G
C447	3M	3G	R411	1M	4F	R486	8L	1F	U421B	1K	3G
C451	6H	2G	R412	2M	4F	R487	8L	1F	U421C	1M	3G
C452	7H	2H	R413	2M	4G	R490	3B	3J	U431A	7D	2G
C453	8H	2G	R414	6M	2F	R491	4B	3J	U431B	6K	2G
C454	7H	2G	R415	6M	2G	R492	4B	3J	U431C	6M	2G
C455	6J	2G	R416	6M	2F	R493	4B	3J	U441A	4K	2H
C462	6L	1H	R417	6M	2F	R494	7B	3J	U441B	5K	2H
C463	6L	1H	R420	2E	4G	R495	7B	2J	U441C	7K	2H
C474	6L	1G	R421	1H	4H	R496	8B	2J	U441D	4K	2H
C477	8M	1G	R422	2H	4H	R497	8B	2J	U441E	2K	2H
C483	3B	1F	R423	2H	4G	R498	3B	3J	U441F	1K	2H
C484	4B	3F	R424	2H	4G	R607	2N	3J	U1101A	2E	2M
C485	8B	2F	R425	2H	4H	R1103	3D	2M	U1101B	6G	2M
C486	8B	2F	R426	2E	4H	R1104	3E	2M	U1102A	3G	1L
C487	3B	3F	R430	2K	3H	R1110	5E	1N	U1102B	3H	1L
C488	8B	2F	R431	1K	3H	R1111	4E	1N	U1103	5B	2K
C489	4B	3F	R432	2L	3H	R1112	4E	1N	U1104A	3J	2M
C611	2N	3J	R440	1L	3H	R1113	4F	1N	U1104B	4G	2M
C1103	3A	3J	R441	1L	3H	R1114	4F	1N	U1104C	4J	2M
C1105	3E	2N	R442	1L	3H	R1115	4F	1N	U1106A	2B	2J
C1106	3H	2L	R443	1L	2H	R1116	5F	1N	U1106B	8J	2J
C1107	3H	2L	R444	2L	2H	R1117	4F	1N	U1106C	6H	2J
C1110	3E	2M	R445	2L	3H	R1118	5F	1N			
C1111	3H	1L	R446	2M	2G	R1120	3E	2N	W401	2E	2H
C1114	5E	1N	R447	3M	3H	R1121	4E	2M	W403	6J	1J
C1130	4G	2L	R448	3L	3H	R1122	3E	2N	W404	6F	1H
C1154	6F	1M	R449	2M	3H	R1123	4F	2M	W405	8L	1J
C1155	6G	2M	R450	6E	2G	R1124	4F	2N	W406	3J	2H
			R451	7H	2H	R1125	3F	2N	W407	3J	2J
CR432	1L	3H	R452	7H	2H	R1126	3F	2N	W408	3J	1J
CR462	6K	1H	R453	8H	2G	R1127	4F	2N	W410	3L	3J
			R454	7H	2F	R1128	3F	2N	W411	2E	2J
L426	2E	4H	R455	6E	2H	R1131	3G	1L	W412	2E	1J
L432	2L	3H	R456	6F	2H	R1132	3H	2L	W413	1M	3J
L462	6K	1H	R460	6K	2H	R1133	3H	2L	W414	2M	3J
			R461	6K	1H	R1134	3J	1M	W1101	5C	2K
Q440	1L	3H	R462	6L	1H	R1135	4G	2M	W1102	3K	2K
Q444	2L	3G	R463	6L	1H	R1136	4G	1N	W1104	5A	1K
Q470	5L	1H	R470	6L	2H	R1142	3H	1L	W1105	4H	1K
Q474	7L	1G	R471	5L	1H	R1143	4H	1L	W1106	8J	2K
Q480	8L	1F	R472	5L	2H	R1144	3J	1M	W1107	4H	2K
Q1101	5E	1M	R473	6K	2H	R1145	3J	1M	W1120	6H	2K
Q1102	4F	1N									

Partial A10 also shown on diagrams 1, 2, 4, 5, 6, 7 and 13.

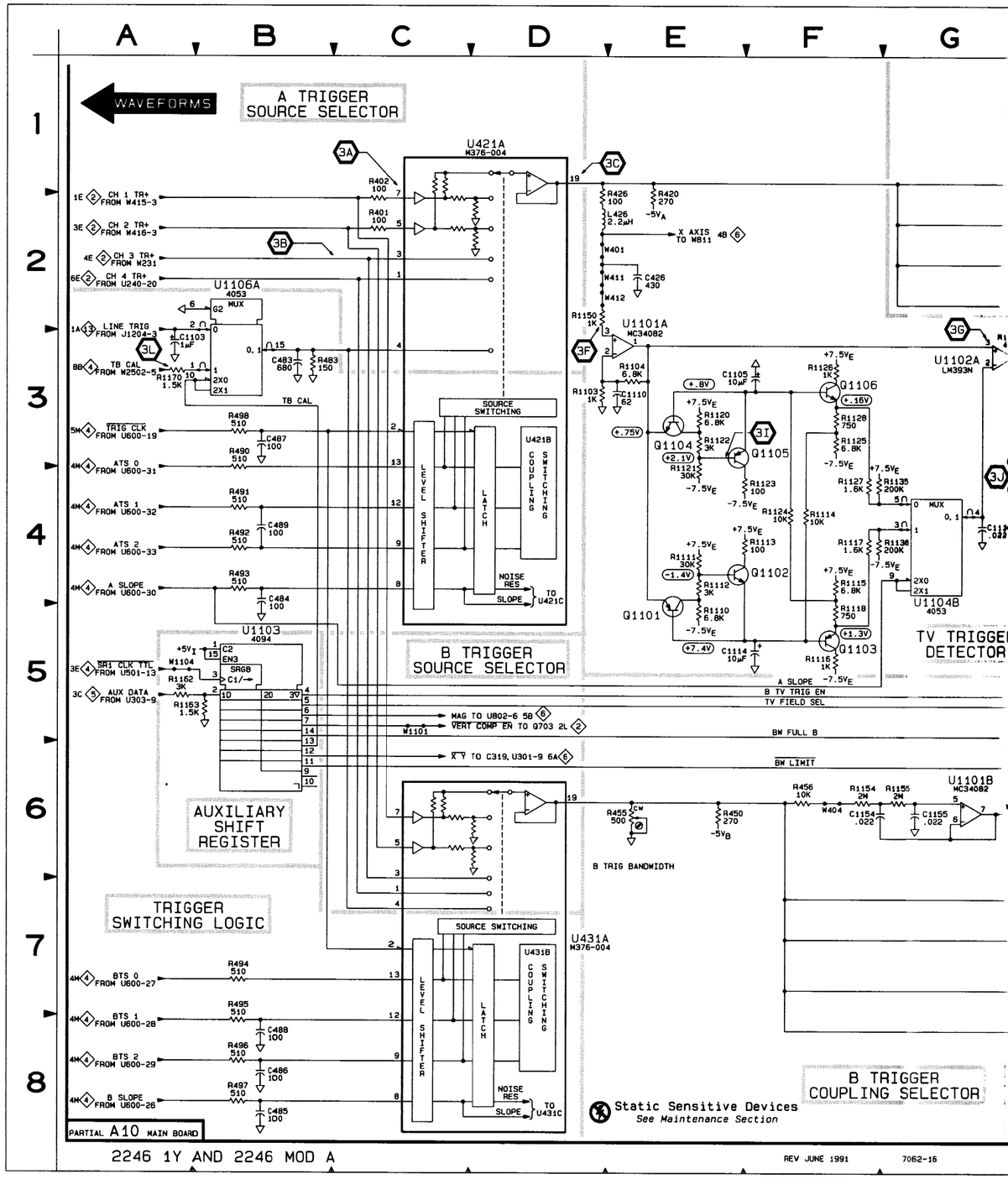

SCHEM LOCATION	BOARD LOCATION
2D	1M
6F	1M
6G	1M
5A	1K
5A	2K
3A	1K
1D	3G
1K	3G
1M	3G
7D	2G
6K	2G
6M	2G
4K	2H
5K	2H
7K	2H
4K	2H
2K	2H
1K	2H
2E	2M
6G	2M
3G	1L
3H	1L
5B	2K
3J	2M
4G	2M
4J	2M
2B	2J
8J	2J
6H	2J
2E	2H
6J	1J
6F	1H
8L	1J
3J	2H
3J	2J
3J	1J
3L	3J
2E	2J
2E	1J
1M	3J
2M	3J
5C	2K
3K	2K
5A	1K
4H	1K
8J	2K
4H	2K
6H	2K

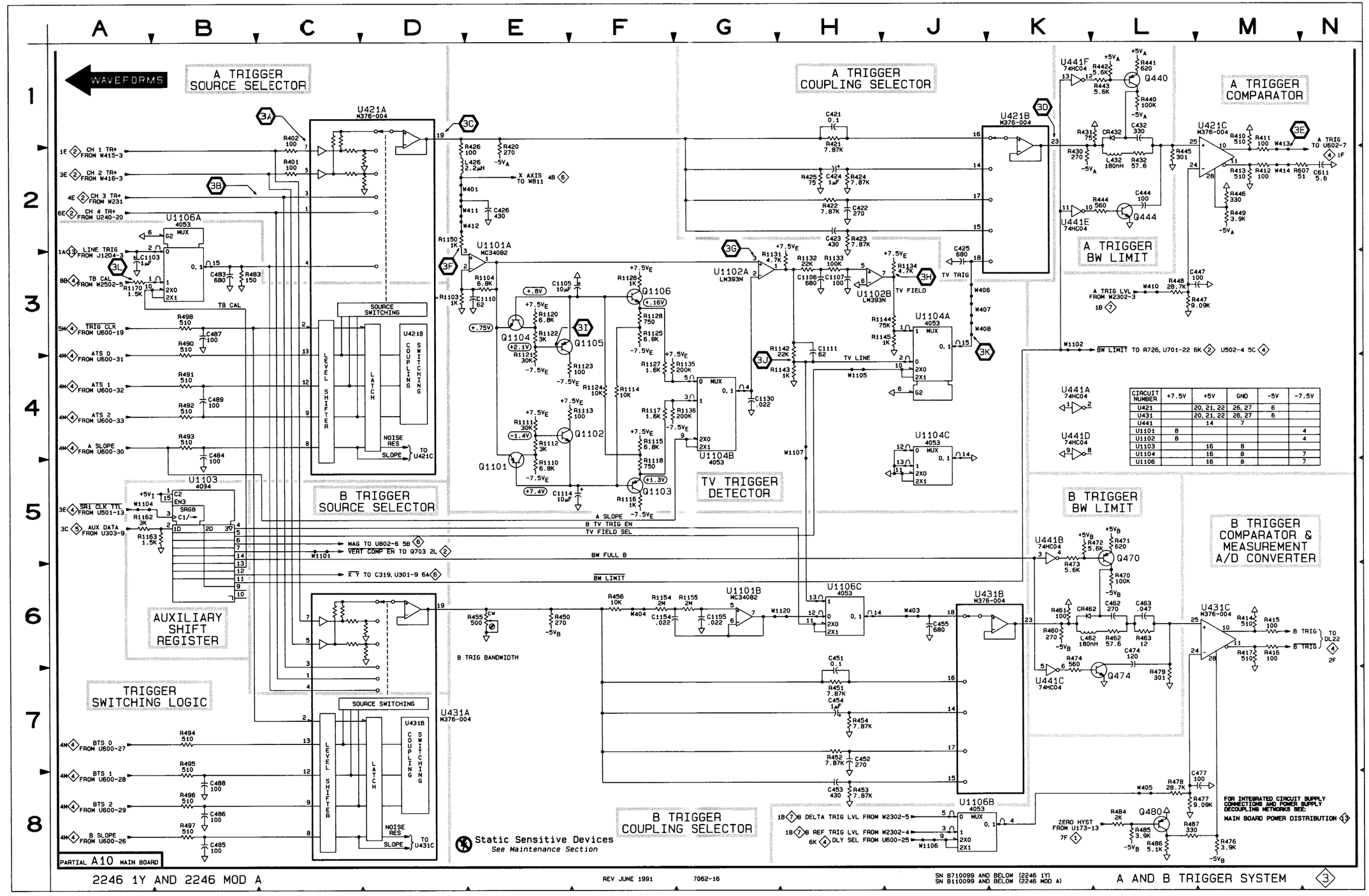

WAVEFORMS FOR DIAGRAM 4

4A

+3.6 V

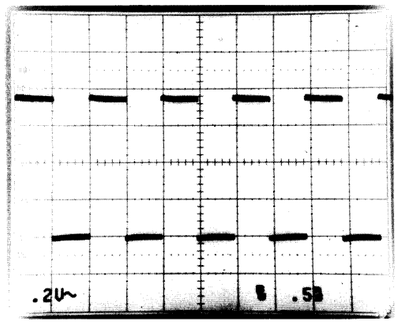

4B

+3.5 V

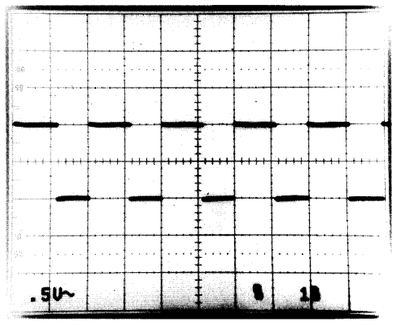

4G

0 V

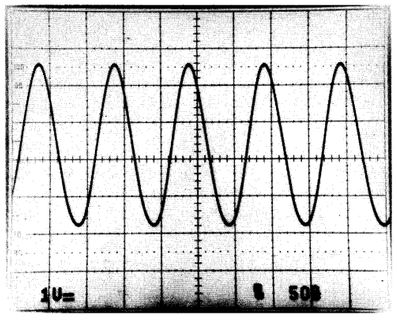

4H

0 V

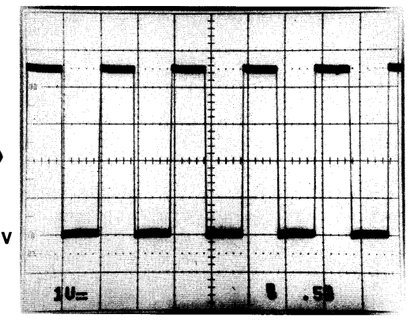

6555-34

4C

0 V

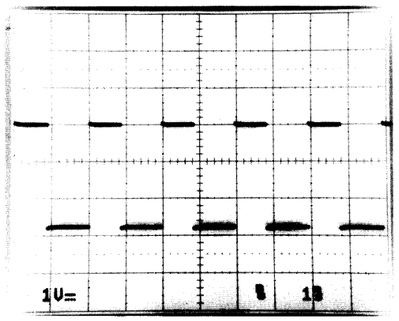

SET SEC/DIV TO 20 μs. WAVEFORM VARIES WITH SETTING OF TRIGGER HOLDOFF CONTROL.

4D

0 V

4I

0 V

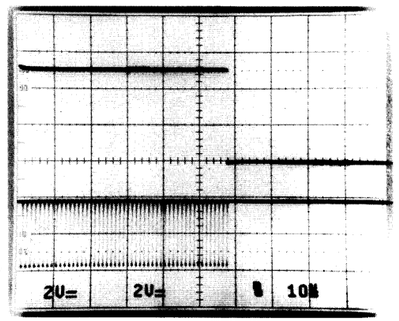

SET A & B SEC/DIV TO 0.1 ms, READOUT CONTROL CCW (OFF), AND HORIZONTAL MODE TO ALT.

4E

+2.65 V

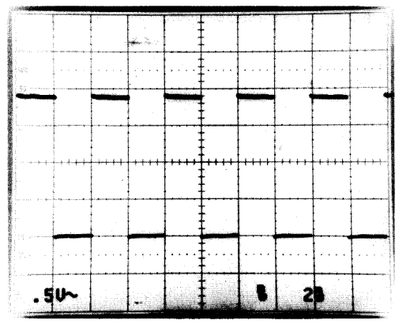

4F

0 V

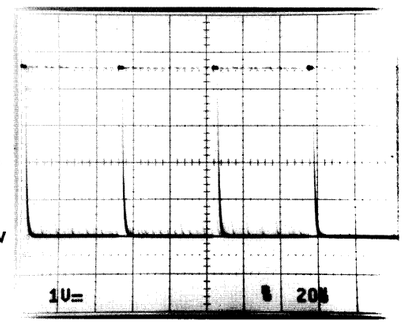

6555-33

MORE

DISPLAY AND TIRGGER LOGIC AND PROCESSOR INTERFACE DIAGRAM 4
(SN B710100 AND ABOVE, 2246 1Y
SN B110100 AND ABOVE, 2246 MOD A)

Assembly A10

CIRCUIT NUMBER	SCHEM LOCATION	BOARD LOCATION	CIRCUIT NUMBER	SCHEM LOCATION	BOARD LOCATION	CIRCUIT NUMBER	SCHEM LOCATION	BOARD LOCATION	CIRCUIT NUMBER	SCHEM LOCATION	BOARD LOCATION
C600	8J	3N	R611	2K	3K	R650	6K	3M	U600	3L	2M
C601	8J	3N	R612	2K	3M	R651	2L	4M	U601	8K	1N
C602	1G	4L	R613	3J	2K	R652	5E	4M	U602	1G	4K
C603	1G	3L	R614	3J	3L	R653	4F	3K	U603A	3H	2K
C607	6J	3L	R615	5F	4L	R654	4F	3L	U603B	3H	2K
C608	6K	3M	R616	6F	3K	R655	4F	3L	U603C	1H	2K
C611	1L	4K	R617	6F	3K	R656	5H	4K	U603D	2H	2K
C612	2F	3K	R618	6F	3M	R657	4J	4K	U604A	4J	2L
C614	5D	5M	R619	6F	3M	R658	5H	4K	U604B	2H	2L
C636*	8H	6N	R620	5F	4M	R659	5J	4M	U604C	8F	2L
C666*	5J	4M	R621	5F	4L	R662	4K	2L	U606A	5D	3M
			R622	6F	3K	R663	6H	3K	U606B	3E	3M
CR603	5J	4M	R623	6F	3K	R664	6J	3K	U606C	4E	3M
CR612	8H	6N	R624	4J	2L	R665	5H	4M	U606D	4E	3M
			R625	4J	2L	R666	5J	4K	U606E	2L	3M
Q600	8J	3N	R626	1G	4L	R669	3H	3L	U606F	3E	3M
Q601	8J	3N	R627	2G	3L	R670	4J	4K			
Q602	3K	2K	R628	4H	2K	R671	6K	3M	W502	4C	3M
Q603	3K	2K	R630	6L	2N	R672	6J	3M	W503	7C	3M
Q604	2K	3K	R631	4J	3L	R673	5D	4M	W504	5C	3M
Q605	2K	3K	R636	8H	6N	R674	5D	4M	W505	4C	3N
Q606	3J	2K	R637	8H	3N	R686	2H	3L	W506	3E	3N
Q607	3J	2K	R638	8J	3N	R687	2J	3L	W507	4C	5N
Q608	6K	2L	R639	1H	3L	R688	2J	3L	W510	4E	6M
			R640	2H	3L	R689	1L	2K	W603	1G	4M
R501	6B	1L	R641	5H	4M	R690	1L	2L	W604	4J	4L
R502	4E	5N	R642	5J	4M	R691	1L	2L	W605	6L	6L
R601	7J	3N	R643	5H	3M	R692	1L	2L	W610	3K	3N
R602	8K	2N	R644	5J	3M	R693	2L	2L	W611	2L	3N
R603	7K	1N	R645	6H	3M	R694	2L	2L	W612*	8H	6N
R604	7K	1N	R646	4K	3M				W2502	3M	1L
R605	8L	1N	R647	5F	1J	U501	3C	5M	W2502	8A	1L
R606	8J	3N	R648	5F	3K	U502	5D	4N			
R609	3K	2K	R649	5F	3K	U503	3D	5N	Y600	6K	3L
R610	3K	2K									

Partial A10 also shown on diagrams 1, 2, 3, 5, 6, 7, 18 and 21.

***See Parts List for serial number ranges.**

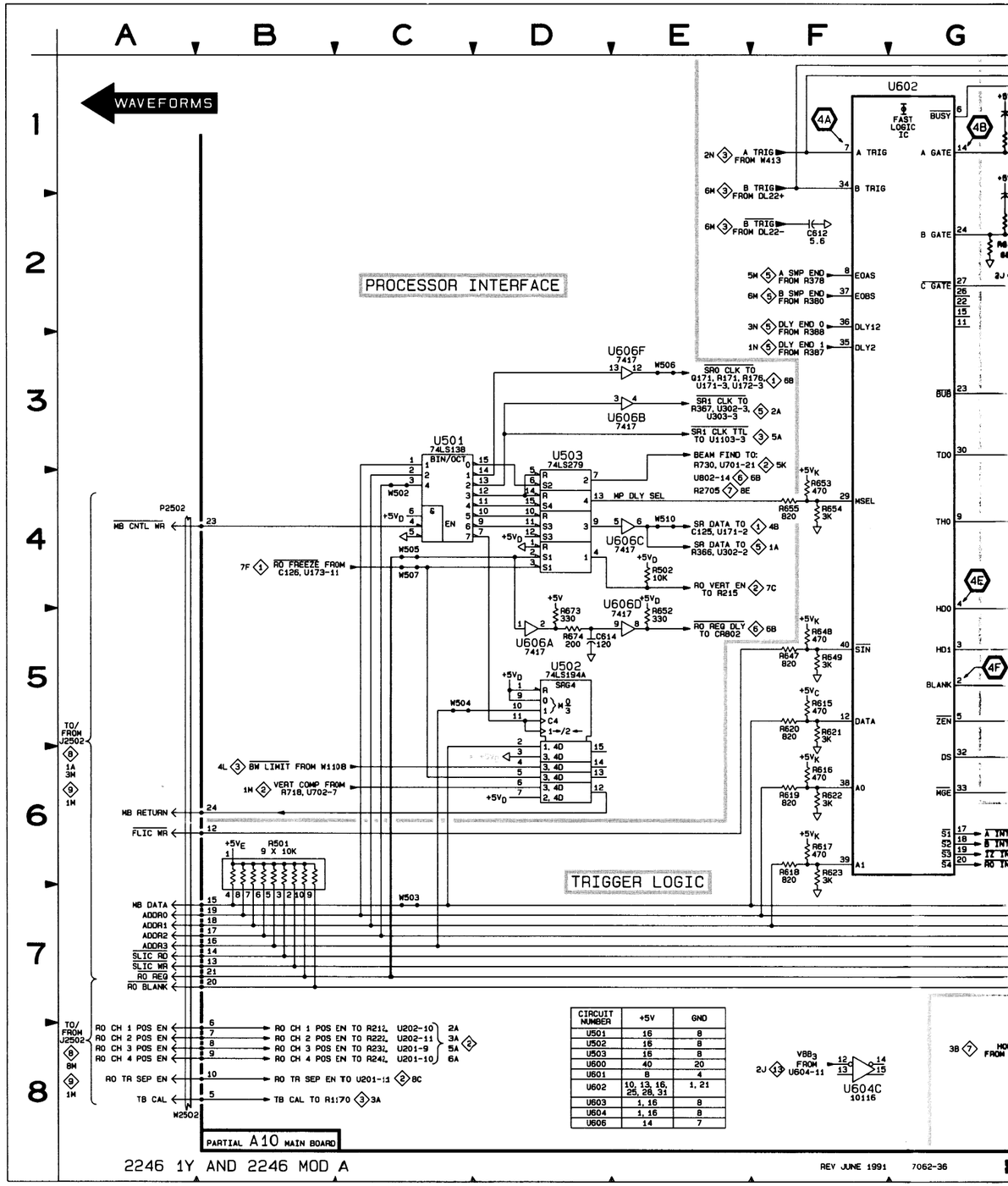

CIRCUIT NUMBER	+5V	GND
U501	16	8
U502	16	8
U503	16	8
U600	40	20
U601	8	4
U602	10, 13, 16, 25, 26, 31	1, 21
U603	1, 16	8
U604	1, 16	8
U606	14	7

RAM 4

	SCHEM LOCATION	BOARD LOCATION
	3L	2M
	8K	1N
	1G	4K
	3H	2K
	3H	2K
	1H	2K
	2H	2K
	4J	2L
	2H	2L
	8F	2L
	5D	3M
	3E	3M
	4E	3M
	4E	3M
	2L	3M
	3E	3M
	4C	3M
	7C	3M
	5C	3M
	4C	3N
	3E	3N
	4C	5N
	4E	6M
	1G	4M
	4J	4L
	6L	6L
	3K	3N
	2L	3N
	8H	6N
	3M	1L
	8A	1L
	6K	3L

● Parts List for
al number ranges.

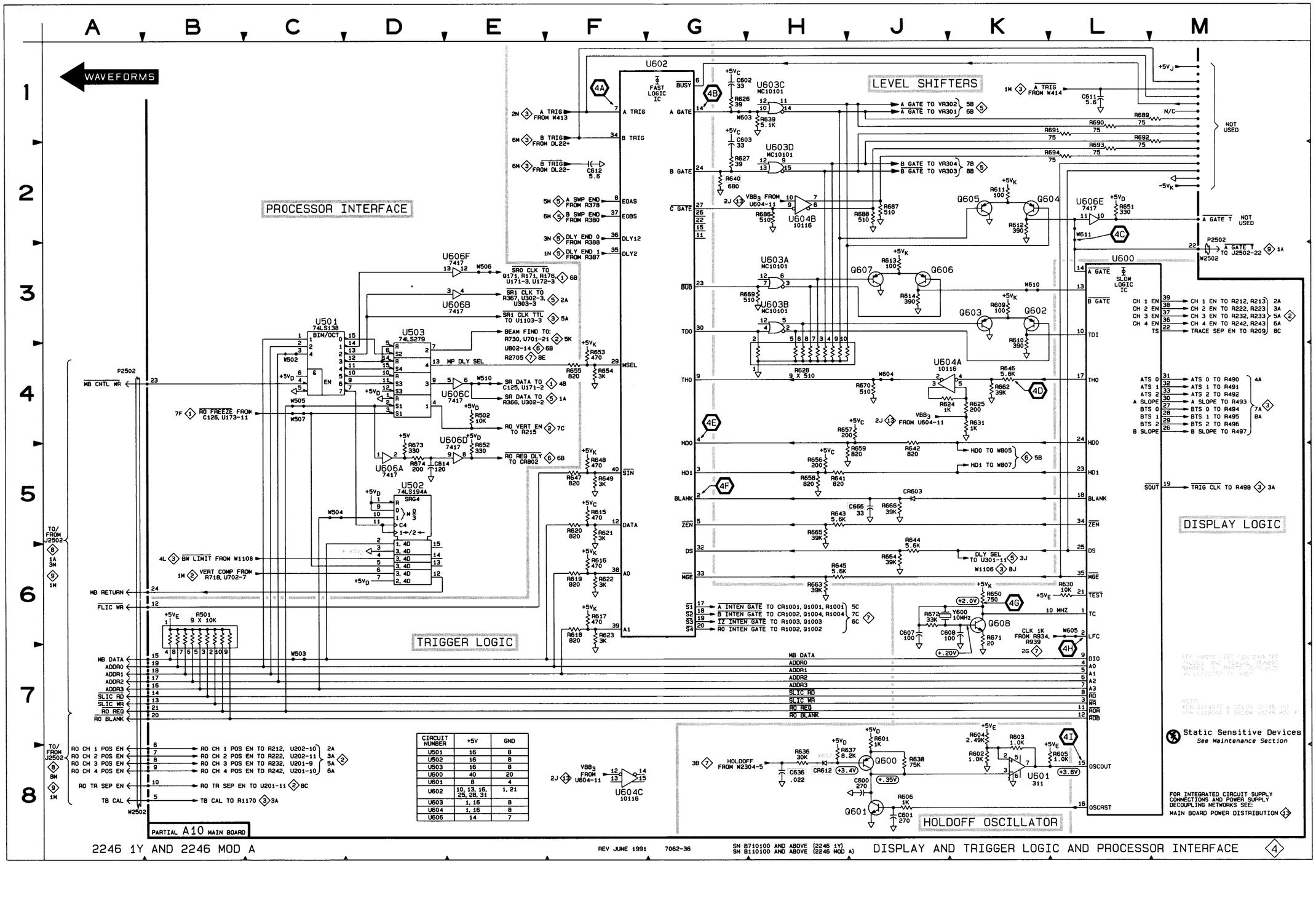

CIRCUIT NUMBER	+5V	GND
U501	16	8
U502	16	8
U503	16	8
U600	40	20
U601	8	4
U602	10, 13, 16, 25, 28, 31	1, 21
U603	1, 16	8
U604	1, 16	8
U606	14	7

DISPLAY AND TIRGGER LOGIC AND PROCESSOR INTERFACE DIAGRAM 4
(SN B710099 AND BELOW, 2246 1Y
SN B110099 AND BELOW, 2246 MOD A)

ASSEMBLY A10

CIRCUIT NUMBER	SCHEM LOCATION	BOARD LOCATION	CIRCUIT NUMBER	SCHEM LOCATION	BOARD LOCATION	CIRCUIT NUMBER	SCHEM LOCATION	BOARD LOCATION	CIRCUIT NUMBER	SCHEM LOCATION	BOARD LOCATION
C600	8J	4K	R609	3K	4M	R644	5J	2K	U600	3L	4L
C601	8J	5K	R610	3K	4M	R645	6H	2K	U601	8K	5K
C602	1H	3K	R611	2K	4M	R646	4K	5M	U602	1G	3K
C603	1H	2K	R612	2K	4M	R647	5F	1K	U603A	2H	3M
C607	6J	4L	R613	2K	4M	R648	5F	2J	U603B	3H	3M
C608	6K	4L	R614	3K	4M	R649	5G	2J	U603C	1H	3M
C612	2G	2K	R615	5F	4K	R650	6K	4K	U603D	2H	3M
			R616	6F	4K	R651	2L	5M	U604A	4K	5M
CR603	5J	3J	R617	6F	4K	R652	2L	5M	U604B	7F	5M
			R618	6F	4K	R653	3F	4N	U604C	8F	5M
DL22	2F	2G	R619	6F	4L	R654	4G	5N	U606A	5E	5M
			R620	5F	4K	R655	4F	5N	U606B	3D	5M
Q600	8J	5J	R621	5G	4L	R656	5H	4J	U606C	4E	5M
Q601	8J	5K	R622	6G	5K	R657	4J	4K	U606D	2L	5M
Q602	3K	4M	R623	6G	5K	R658	5H	4J	U606E	2L	5M
Q603	3K	4M	R624	4K	5N	R659	5J	3K	U606F	2D	5M
Q604	2K	4M	R625	4K	5N	R662	4K	4M			
Q605	2K	4M	R626	1H	3L	R663	6H	2K	W505	4E	5N
Q606	2K	4M	R627	1H	2L	R664	6J	2K	W510	4E	6M
Q607	2K	4M	R628	4H	4N	R665	5H	3J	W603	1H	3M
Q608	6K	4L	R630	6L	5M	R666	5J	3J	W604	4J	3L
			R631	4K	6N	R669	3H	3M	W605	5G	3K
R501	6B	3M	R636	8H	5K	R670	4J	5M	W610	3L	4M
R502	4E	5N	R637	8H	4J	R671	6K	4L	W611	3L	5M
R601	7J	4J	R638	8J	4J	R672	6J	4K	W612	8H	5K
R602	8K	5L	R639	1H	3N				W2502	2M	1K
R603	7K	5L	R640	2H	3N	U501	3C	3N	W2502	8A	1K
R604	7K	5L	R641	5H	4J	U502	4D	3N			
R605	8L	5L	R642	5J	4K	U503	3D	5N	Y600	6K	4L
R606	8J	5K	R643	5H	3J						

Partial A10 also shown on diagrams 1, 2, 3, 5, 6, 7 and 13.

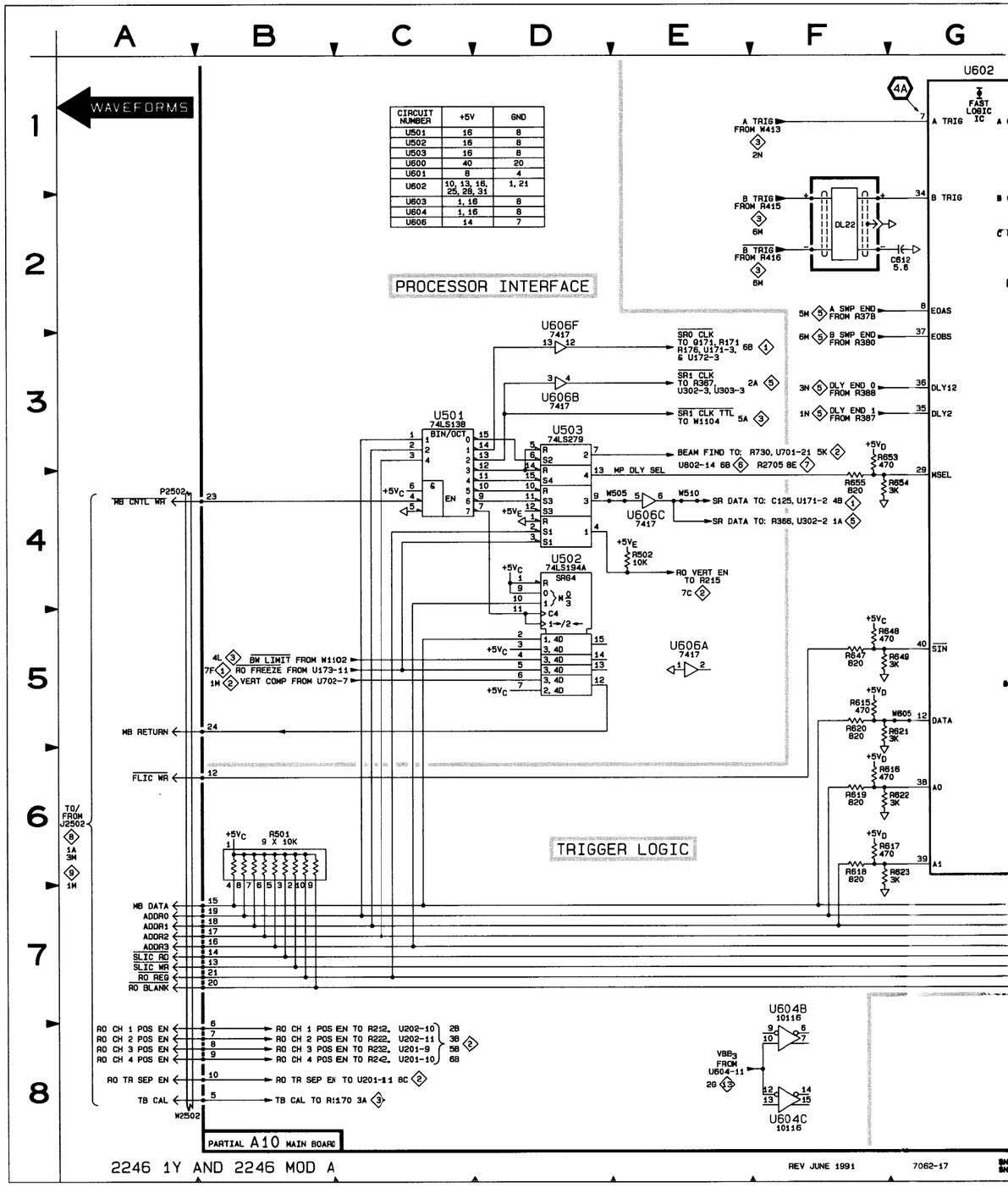

CIRCUIT NUMBER	+5V	GND
U501	16	8
U502	16	8
U503	16	8
U600	40	20
U601	8	4
U602	10, 13, 16, 25, 28, 31	1, 21
U603	1, 16	8
U604	1, 16	8
U606	14	7

CIRCUIT NUMBER	+5V	GND
U501	16	8
U502	16	8
U503	16	8
U600	40	20
U601	8	4
U602	10, 13, 16, 25, 28, 31	1, 21
U603	1, 16	8
U604	1, 16	8
U606	14	7

WAVEFORMS

PROCESSOR INTERFACE

TRIGGER LOGIC

LEVEL SHIFTERS

DISPLAY LOGIC

HOLDOFF OSCILLATOR

Static Sensitive Devices
See Maintenance Section

FOR INTEGRATED CIRCUIT SUPPLY CONNECTIONS AND POWER SUPPLY DECOUPLING NETWORKS SEE: MAIN BOARD POWER DISTRIBUTION 13

PARTIAL A10 MAIN BOARD

2246 1Y AND 2246 MOD A

REV JUNE 1991

7062-17

SN B710099 AND BELOW (2246 1Y)
SN B110099 AND BELOW (2246 MOD A)

DISPLAY AND TRIGGER LOGIC AND PROCESSOR INTERFACE 4

WAVEFORMS FOR DIAGRAM 5

SET A SEC/DIV TO 2 ms.

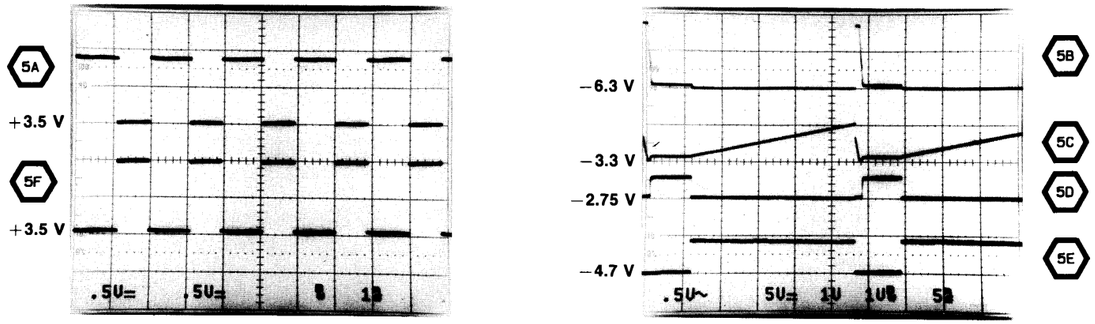

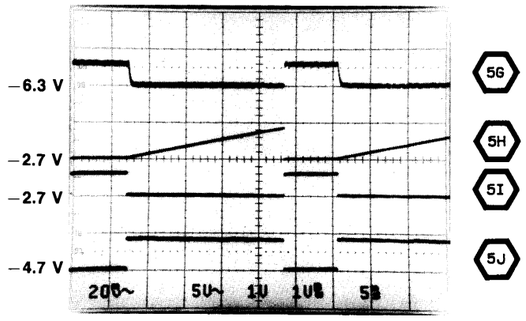

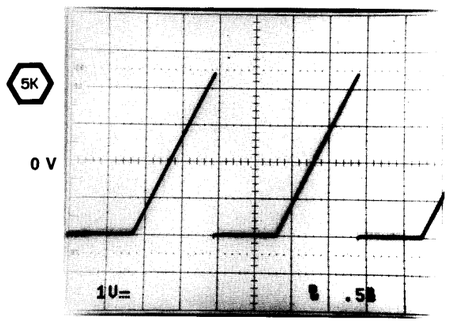

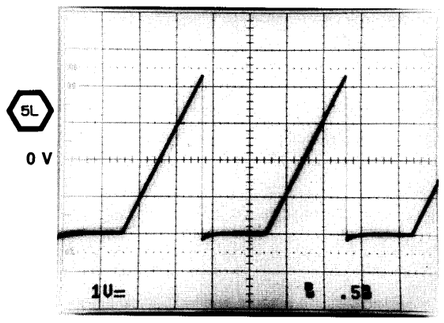

HORIZ MODE A, A SEC/DIV 2μs,
HOLDOFF MIN (CCW)

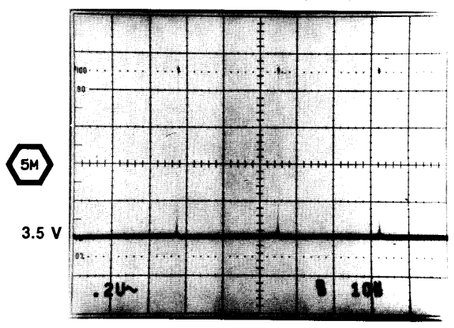

MORE

HORIZ MODE ALT, A SEC/DIV 2μs,
B SEC/DIV .5μs, HOLDOFF MIN,
DELAY-INTENSIFIED ZONE STARTS MIDSCREEN

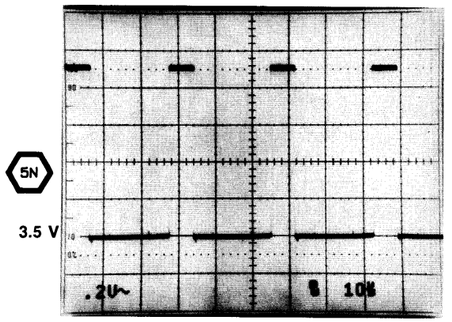

6555-42

A AND B SWEEPS AND DELAY COMPARATORS DIAGRAM 5

ASSEMBLY A10

CIRCUIT NUMBER	SCHEM LOCATION	BOARD LOCATION	CIRCUIT NUMBER	SCHEM LOCATION	BOARD LOCATION	CIRCUIT NUMBER	SCHEM LOCATION	BOARD LOCATION	CIRCUIT NUMBER	SCHEM LOCATION	BOARD LOCATION
C301	4D	8F	Q328	4K	7E	R335	3L	8F	R382	6L	7G
C302	7D	9F	Q329	6K	9E	R336	3L	8F	R383	8B	9G
C303	3D	7C	Q330	4H	7E	R337	2M	8E	R384	5E	8D
C305	4B	9D	Q331	6H	9E	R338	4L	8E	R385	1M	8F
C306	4A	7C	Q332	7B	9F	R340	6C	7G	R386	1M	9F
C307A	5J	7E	Q333	5B	8F	R341	1L	9F	R387	1M	8F
C307B	5J	7E				R342	2L	9E	R388	3M	8F
C307C	7J	10F	R301	6C	9E	R343	1L	9F	R391*	5E	8D
C308	4H	7D	R302	4J	7E	R344	4K	8E	R393	4H	10E
C310	4J	7D	R303	4C	8F	R346	6K	8D	R394	6H	10E
C311	5C	7F	R304	5C	8F	R347	5K	8E	R395	5J	7E
C312	3J	9E	R305	5C	7G	R348	5L	8H	R396	7J	9E
C313	2J	9E	R306	4B	7C	R349	5L	7G			
C314	5J	7F	R307	4A	7C	R350A	6M	7H	U301A	1K	8D
C315	5J	7G	R308	4A	7C	R350B	7M	7H	U301C	2K	8D
C321	7C	9F	R309	3C	9C	R350C	6L	7H	U302	1B	8C
C326	7H	10E	R310	3C	7C	R350E	5L	7H	U303	2C	9C
C329	7J	10F	R311	3D	8C	R351*	5E	8F	U304A	3H	8D
C330	7J	9G	R313A	4D	7C	R352	6L	7G	U304B	6H	8D
			R313B	3D	7C	R354	6B	9E	U307	2F	7D
CR301	3C	7C	R313C	3D	7C	R355	6C	9E	U308	2G	7D
			R313D	3D	7C	R356	7B	9F	U309A	4A	7C
Q301	3D	7C	R314	3D	7C	R357B	1M	8F	U309B	3D	7C
Q302	4B	8E	R315	8K	10E	R357C	1M	8F	U310	5F	9D
Q303	4C	8E	R316	5D	7F	R357D	3M	8F	U311	5G	9D
Q304	4D	8F	R317	4B	8E	R357E	3M	8F	U313	3M	8E
Q305	4J	7E	R318	4C	8E	R359	2M	8F	U315A	1M	8F
Q306	4J	7D	R319	5B	8F	R360	3M	8F	U315B	4M	8F
Q307	3H	8D	R320	5K	8E	R361	6D	8G	U315C	2M	8F
Q308	5D	7F	R321A	6F	8D	R362	4C	8F	U316A	6M	7H
Q309	5C	7F	R321B	6F	8D	R363	7C	9F	U316B	6L	7H
Q310A	5J	7E	R321C	6F	8D	R364	8C	9G	U316C	6L	7H
Q310B	5J	7E	R321D	3F	8D	R365	7H	10E	U316D	6M	7H
Q311	5C	8F	R321E	3F	8D	R366	1A	8C			
Q312	5K	7E	R321F	3F	8D	R367	2A	8C	VR301	6B	6G
Q313	8D	9F	R322	5L	7H	R370	8C	9G	VR302	5B	6G
Q315	6B	9E	R323	7L	7G	R371	8D	9G	VR303	8B	8G
Q316	7C	9E	R325	4H	7D	R372	8D	9G	VR304	7B	8G
Q317	7D	9F	R326	4J	7D	R373	8C	9G	VR308	7C	9F
Q318	7J	10E	R327	7C	9F	R375	8K	10E	VR309	5C	6G
Q320	6H	9D	R328	3M	8E	R376	7K	9E	VR310	8C	9G
Q321	7D	9F	R329	3J	9E	R377	6L	8G	VR311	6K	8E
Q322	7C	9F	R330	2J	9E	R378	5M	6J	VR312	8K	10E
Q323A	7J	9E	R331	3K	8E	R379	6L	7G			
Q323B	8J	9E	R332	5C	7G	R380	6M	6J	W304	7K	8G
Q325	7K	9E	R333	5D	7G	R381	7D	9F	W802	5K	8G
Q326	5D	7F	R334	5B	8G						

Partial A10 also shown on diagrams 1, 2, 3, 4, 6, 7 and 13.

***See Parts List for serial number ranges.**

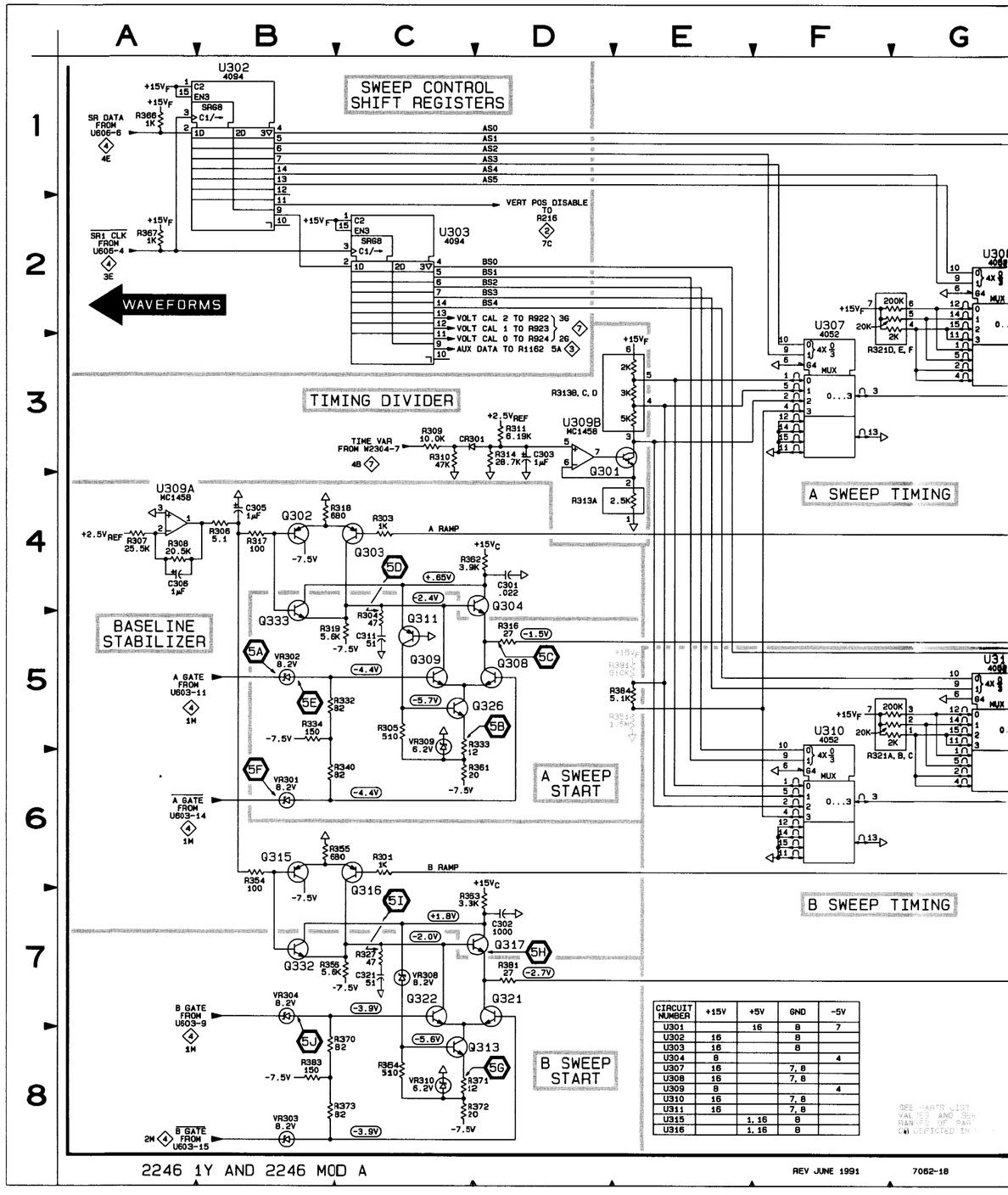

SCHEM LOCATION	BOARD LOCATION
6L	7G
8B	9G
5E	8D
1M	8F
1M	9F
1M	8F
3M	8F
5E	8D
4H	10E
6H	10E
5J	7E
7J	9E
1K	8D
2K	8D
1B	8C
2C	9C
3H	8D
6H	8D
2F	7D
2G	7D
4A	7C
3D	7C
5F	9D
5G	9D
3M	8E
1M	8F
4M	8F
2M	8F
6M	7H
6L	7H
6L	7H
6M	7H
6B	6G
5B	6G
8B	8G
7B	8G
7C	9F
5C	6G
8C	9G
6K	8E
8K	10E
7K	8G
5K	8G

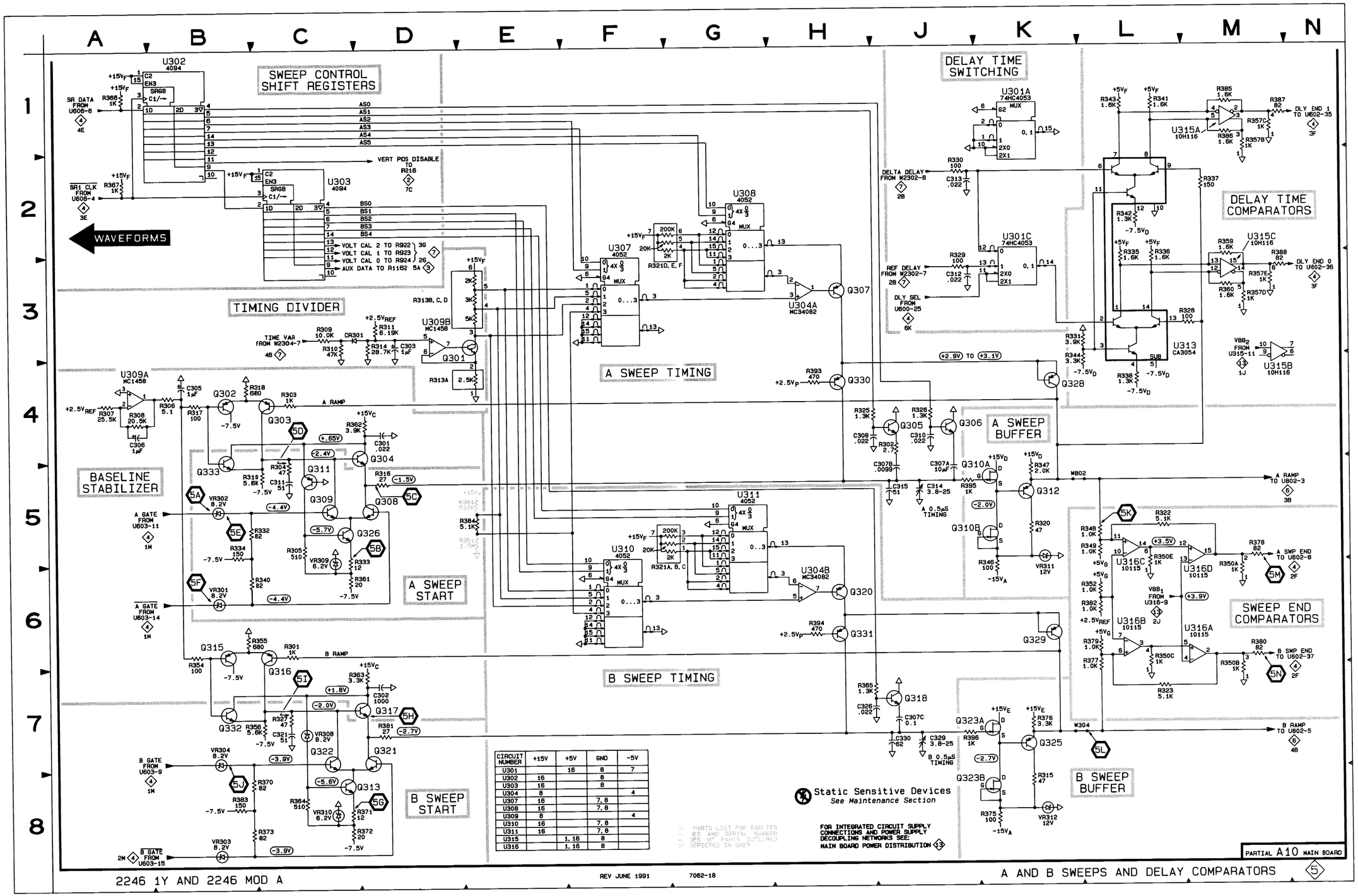

CIRCUIT NUMBER	+15V	+5V	GND	-5V
U301		16	8	7
U302	16		8	
U303	16		8	
U304	8			4
U307	16		7, 8	
U308	16		7, 8	
U309	8			4
U310	16		7, 8	
U311	16		7, 8	
U315		1, 16	8	
U316		1, 16	8	

WAVEFORMS FOR DIAGRAM 6

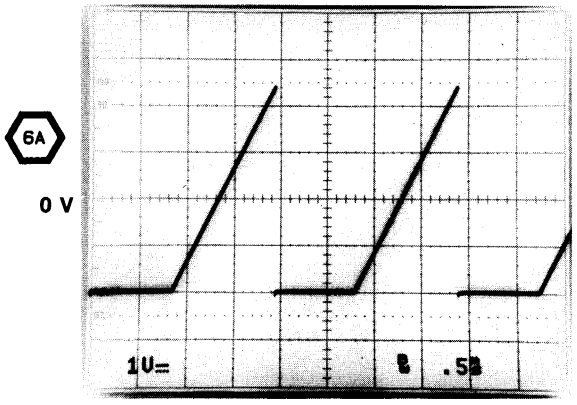

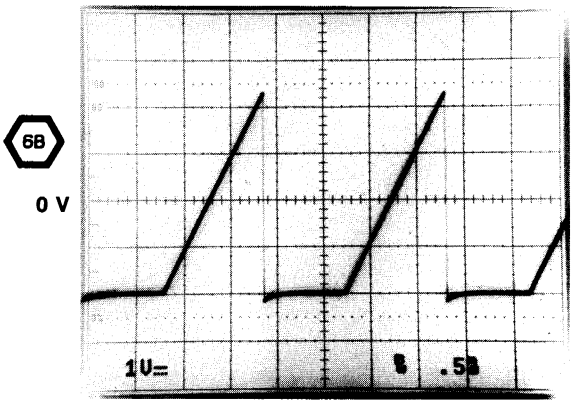

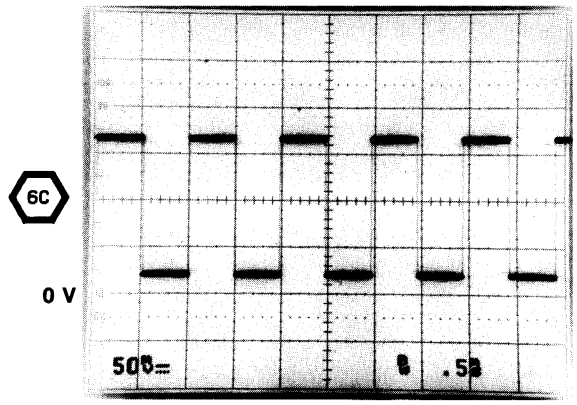

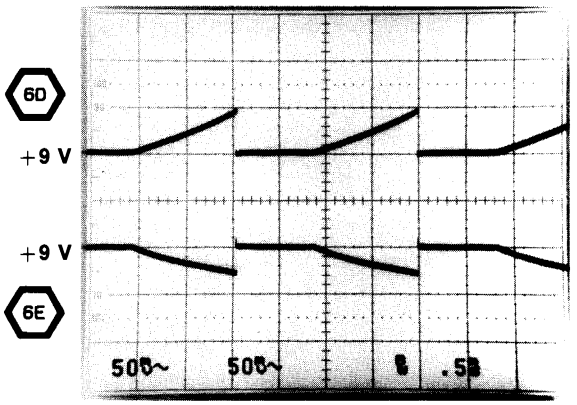

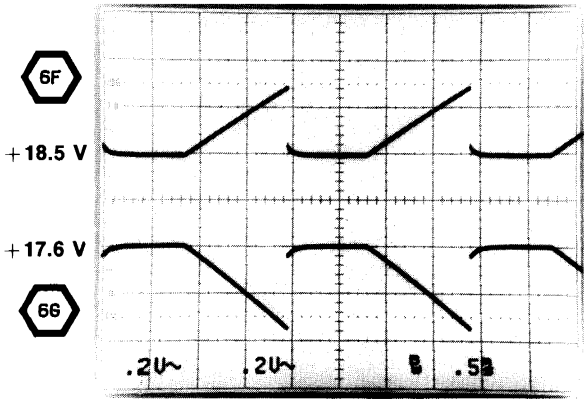

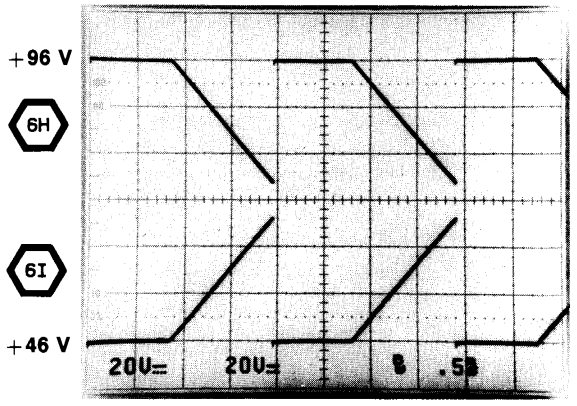

6555-43

HORIZONTAL OUTPUT AMPLIFIER DIAGRAM 6
(SN B710100 AND ABOVE, 2246 1Y
SN B110100 AND ABOVE, 2246 MOD A)

ASSEMBLY A10

CIRCUIT NUMBER	SCHEM LOCATION	BOARD LOCATION	CIRCUIT NUMBER	SCHEM LOCATION	BOARD LOCATION	CIRCUIT NUMBER	SCHEM LOCATION	BOARD LOCATION	CIRCUIT NUMBER	SCHEM LOCATION	BOARD LOCATION
C319	7B	7F	Q804	4H	7J	R814	3G	8J	R892	5L	8K
C802	3J	7J	Q805	5K	8K	R820	7L	8J	R893	5H	8J
C803	4J	7K	Q806	5J	8K	R821	7L	7J	R894	5H	8J
C804	4J	8K	Q807	5H	8J	R822	7L	7K	R896	6J	9J
C805	4E	8H	Q809	5F	8H	R823	4C	8G	R897	5J	8K
C807	2J	7J	Q810	3F	7H	R825	7C	8H	R898	4J	7K
C808	5B	9G	Q811	3G	7J	R826	7C	8G			
C809	6J	8J	Q812	5G	8J	R827	4C	9H	U301B	6B	9D
C814	6J	8J				R828	3K	7J	U801A	7H	7H
C817	6C	6G	R353	6B	9D	R829	3K	7K	U802	3C	8H
C819	7L	7J	R358	6B	9D	R830	5K	8K			
C820	5H	8J	R369	6B	8D	R831	5K	8J	VR801	4H	8J
C860	3G	7J	R801	3K	8K	R836	4C	8H			
C870	5G	8J	R802	3L	7K	R854	5F	8H	W17	3M	7K
C880	4G	8J	R803	4J	8K	R855	4F	7H	W18	5M	8K
			R804	4J	8K	R856	4E	8H	W305	6B	10D
CR801*	5B	5K	R805	4J	8J	R857	4E	8H	W805	5B	6M
CR802*	6B	4M	R806	2J	7J	R860	5C	8H	W806	5C	6K
			R807	4B	9G	R861	3F	7J	W807	5B	6M
P17	3M	7K	R808	4D	7H	R862	3G	7J	W808	5C	7K
P18	5M	8K	R809	4D	8H	R863	4F	7J	W810	4B	6H
			R810	5D	8H	R871	5F	8J	W811	4B	5H
Q801	3K	7K	R811	7D	7H	R872	5G	8J	W820*	5C	5K
Q802	3J	7K	R812	7D	8H	R873	5F	8J	W821*	6B	4M
Q803	3H	7J	R813	3G	8J	R891	6K	8K			

Partial A10 also shown on diagrams 1, 2, 3, 4, 5, 7 and 13.

***See Parts List for serial number ranges.**

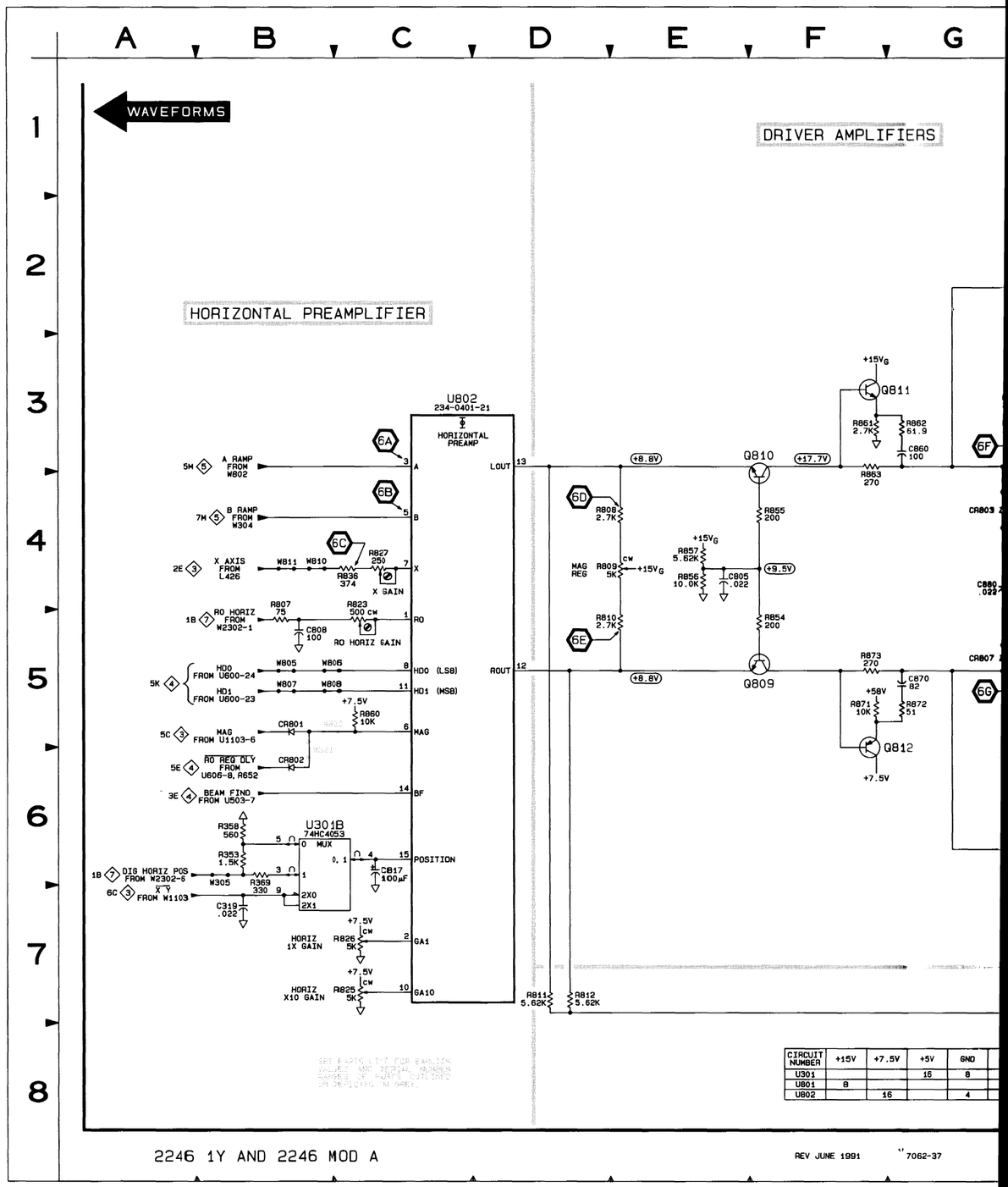

CIRCUIT NUMBER	+15V	+7.5V	+5V	GND
U301			16	8
U801	8			
U802		16		4

2246 1Y AND 2246 MOD A

REV JUNE 1991

7062-37

	SCHEM LOCATION	BOARD LOCATION
	5L	8K
	5H	8J
	5H	8J
	6J	9J
	5J	8K
	4J	7K
	6B	9D
	7H	7H
	3C	8H
	4H	8J
	3M	7K
	5M	8K
	6B	10D
	5B	6M
	5C	6K
	5B	6M
	5C	7K
	4B	6H
	4B	5H
	5C	5K
	6B	4M

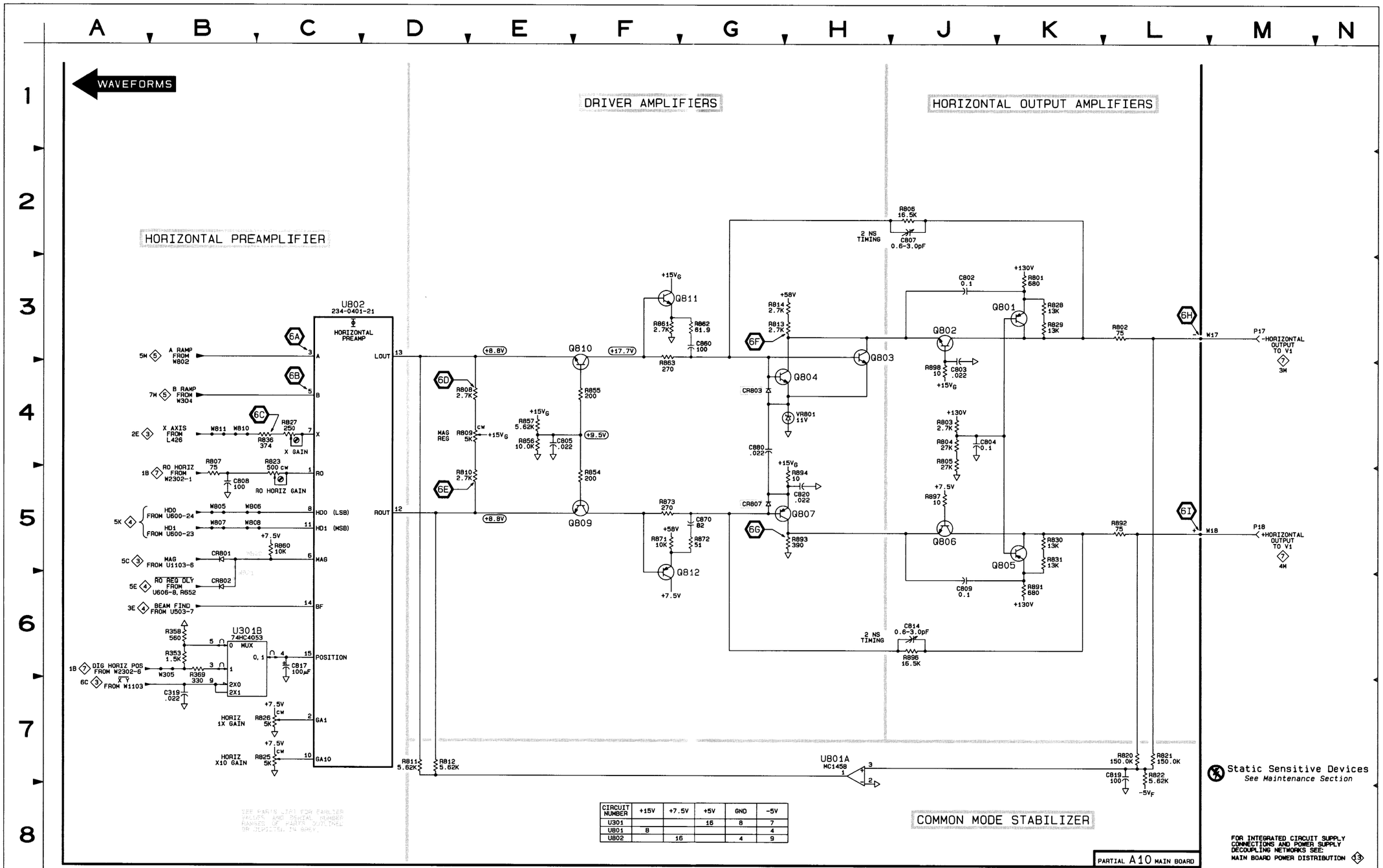

CIRCUIT NUMBER	+15V	+7.5V	+5V	GND	-5V
U301			16	8	7
U801	8				4
U802		16		4	9

SEE PARTS LIST FOR EARLIER VALUES AND PARTIAL NUMBER RANGES OF PARTS OUTLINED OR DEPICTED IN GRAY.

2246 1Y AND 2246 MOD A

REV JUNE 1991 7062-37

SN B710100 AND ABOVE (2246 1Y)
SN B110100 AND ABOVE (2246 MOD A)

HORIZONTAL OUTPUT AMPLIFIER 6

HORIZONTAL OUTPUT AMPLIFIER DIAGRAM 6
(SN B710099 AND BELOW, 2246 1Y
SN B110099 AND BELOW, 2246 MOD A)

ASSEMBLY A10

CIRCUIT NUMBER	SCHEM LOCATION	BOARD LOCATION	CIRCUIT NUMBER	SCHEM LOCATION	BOARD LOCATION	CIRCUIT NUMBER	SCHEM LOCATION	BOARD LOCATION	CIRCUIT NUMBER	SCHEM LOCATION	BOARD LOCATION
C319	6B	6F	Q806	6K	8J	R816	7H	8J	R852	5K	8K
C802	3K	7K	Q807	5H	8J	R819	5L	8K	R853	6J	8J
C803	3J	7J	Q808	5H	8J	R820	7L	8K	R854	5E	8H
C804	3G	8J	Q809	5E	8H	R821	7L	7K	R855	4E	7H
C805	4K	8J	Q810	3E	7H	R822	7L	7K	R856	4E	8H
C807	2H	7J				R823	4C	8G	R857	4E	8H
C808	5B	9G	R353	6B	8D	R825	7C	8H	R858	3K	7J
C809	5K	8K	R358	6B	8D	R826	7C	7G			
C810	5J	8J	R369	6B	8D	R827	4C	8H	U301B	6B	8D
C814	7H	8J	R801	2K	7K	R828	3K	7K	U801A	7H	7H
C817	6C	6G	R802	3L	7K	R829	6K	8K	U802	3C	8H
C819	7L	7J	R803	2J	7J	R836	4C	8H			
			R804	2J	7J	R840	2K	7J	VR801	4K	8J
CR801	4B	9H	R805	4H	7J	R841	4F	7J	VR802	3G	8J
CR802	3L	7K	R806	2H	7J	R842	3F	7J			
CR819	6L	8J	R807	5B	9G	R843	2G	7K	W17	3M	7K
			R808	4D	7H	R844	2G	7K	W18	5M	8K
P17	3M	7K	R809	4D	8H	R845	3H	7J	W305	6B	10D
P18	5M	8K	R810	5E	8H	R846	4K	7J	W805	5B	6L
			R811	7D	7H	R847	5G	8J	W806	5C	6K
Q801	2K	7J	R812	7D	8H	R848	5H	8K	W807	5B	6L
Q802	3K	7J	R813	6K	8K	R849	5H	8K	W808	5C	6K
Q803	3H	7J	R814	6J	8J	R850	5G	8J	W810	4B	5G
Q804	3G	7J	R815	6J	8J	R851	5H	8J	W811	4B	5H
Q805	5K	8J									

Partial A10 also shown on diagrams 1, 2, 3, 4, 5, 7 and 13.

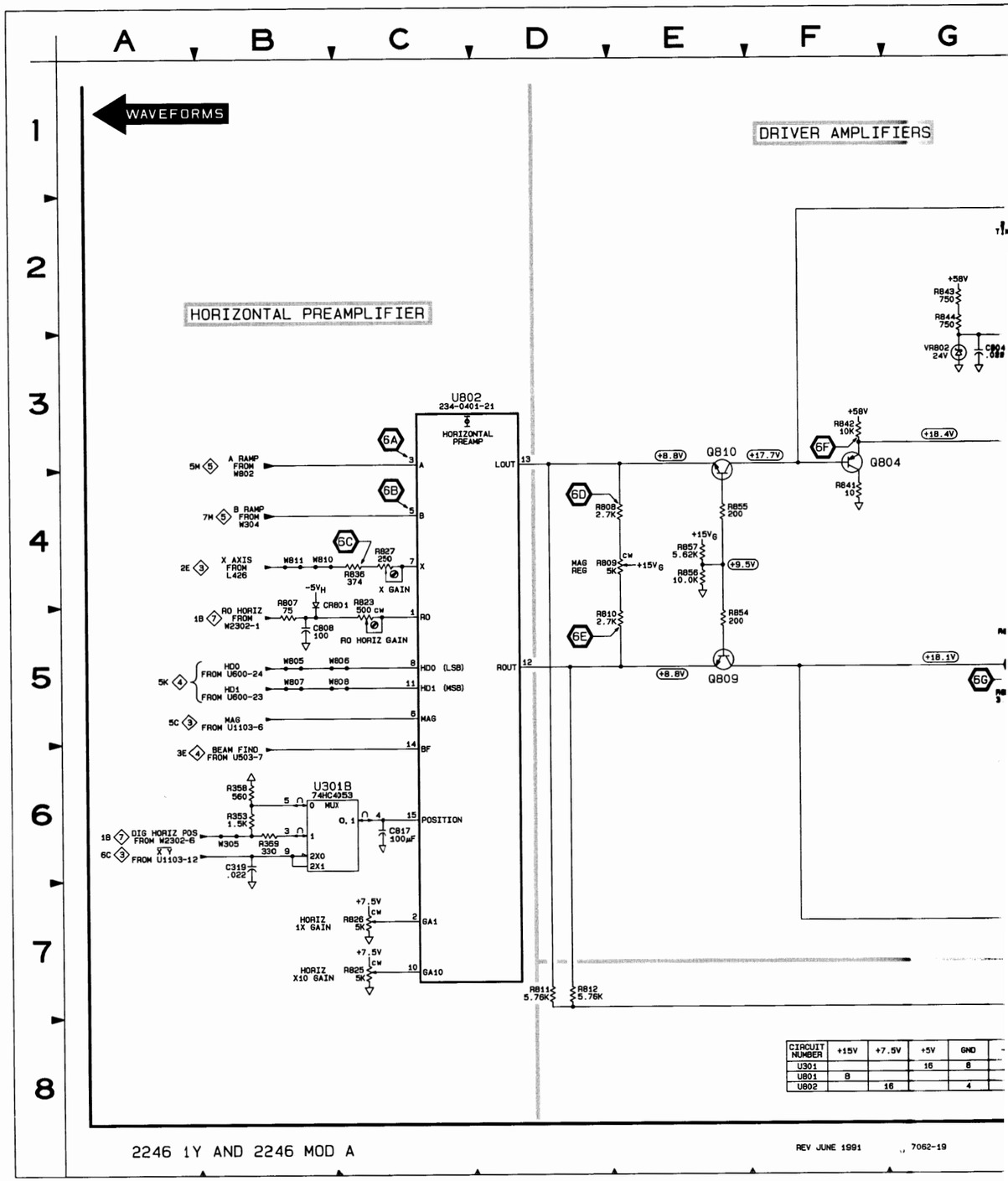

CHEM CATION	BOARD LOCATION
5K	8K
6J	8J
5E	8H
4E	7H
4E	8H
4E	8H
3K	7J
6B	8D
7H	7H
3C	8H
4K	8J
3G	8J
3M	7K
5M	8K
6B	10D
5B	6L
5C	6K
5B	6L
5C	6K
4B	5G
4B	5H

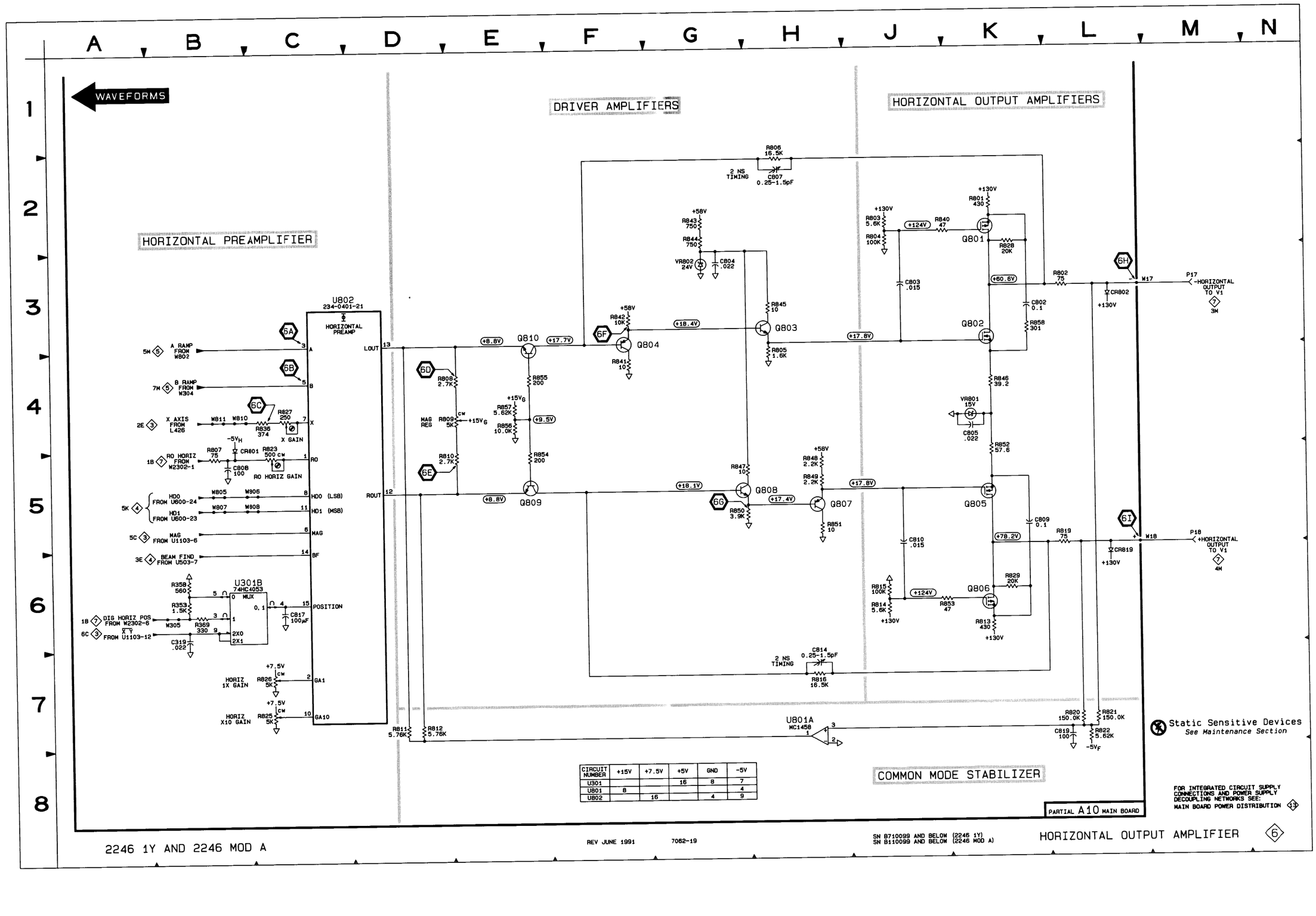

CIRCUIT NUMBER	+15V	+7.5V	+5V	GND	-5V
U301			16	8	7
U801	8				4
U802		16		4	9

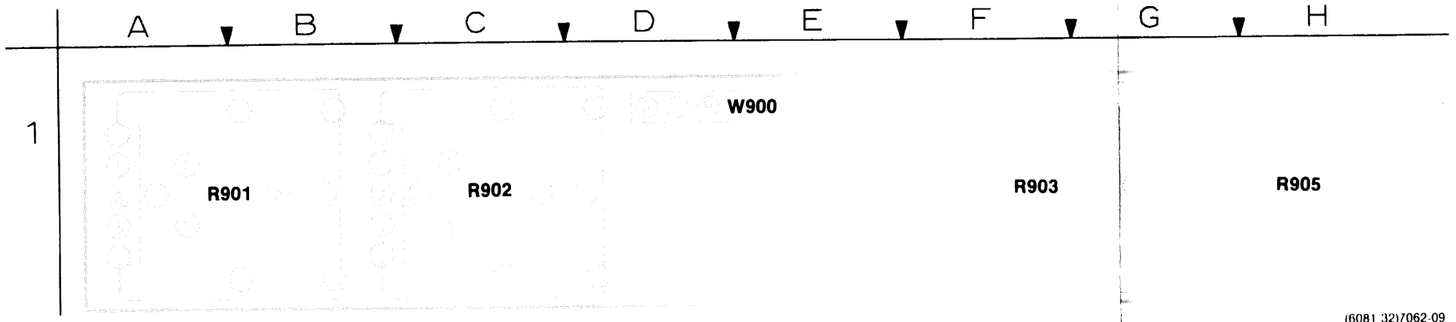

(6081 32)7062-09

Figure 9-9. A8—CRT Control board.

Static Sensitive Devices
See Maintenance Section

COMPONENT NUMBER EXAMPLE

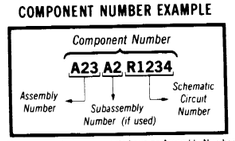

Chassis-mounted components have no Assembly Number prefix—see end of Replaceable Electrical Parts List-

A8—CRT CONTROL BOARD

CIRCUIT NUMBER	SCHEM NUMBER	CIRCUIT NUMBER	SCHEM NUMBER
R901	7		
R902	7	W900	7
R903	7	W900	13
R905	7		

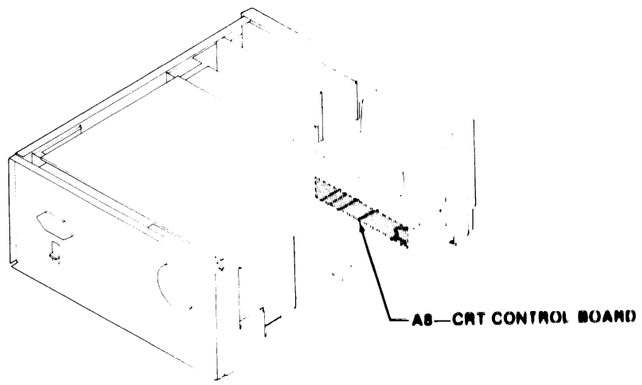

WAVEFORMS FOR DIAGRAM 7

SET READOUT CONTROL CCW (OFF) AND A INTEN CONTROL CW (FULLY ON).

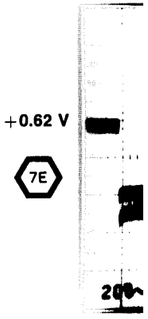

SET READOUT CONTROL CCW (OFF) AND A INTEN CONTROL CW (FULLY ON).

SET READOUT CONTROL CCW (OFF) AND A INTEN CONTROL CW (FULLY ON).

G H

R903 R905

(6081 32)7062-09

WAVEFORMS FOR DIAGRAM 7

7A

0 V

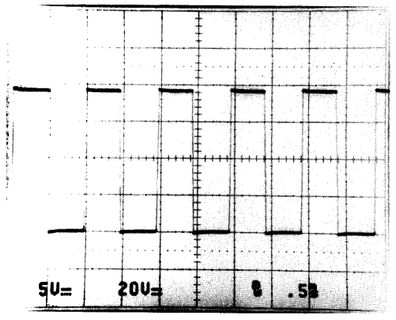

SET READOUT CONTROL CCW (OFF) AND A INTEN CONTROL CW (FULLY ON).

7B

+5.5 V

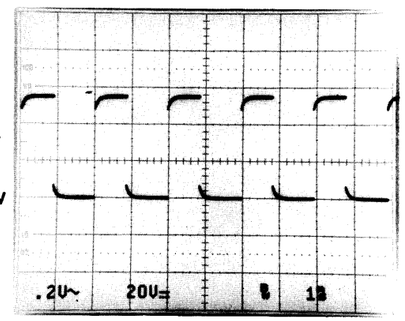

+0.62 V

7E

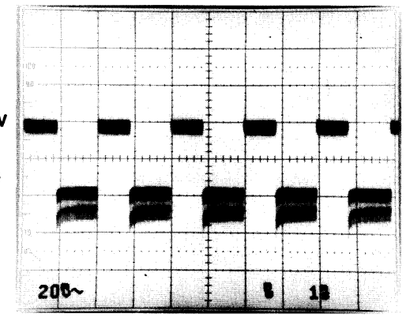

SET READOUT CONTROL CCW (OFF) AND A INTEN CONTROL CW (FULLY ON).

7G

0 V

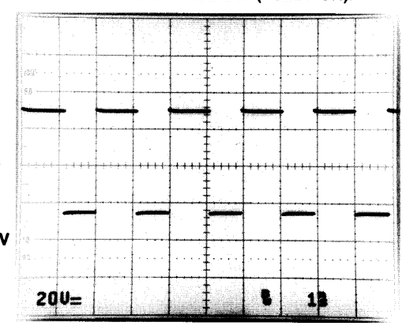

0 V

7F

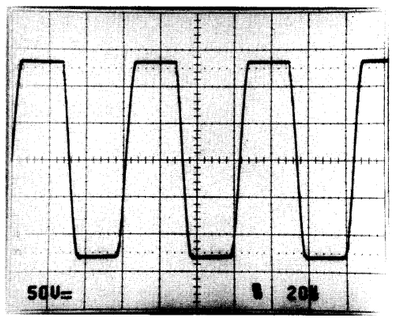

SET READOUT CONTROL CCW (OFF), A INTEN CCW (OFF), B ENTEN CW (FULLY ON), AND HORIZONTAL MODE TO ALT.

7H

0 V

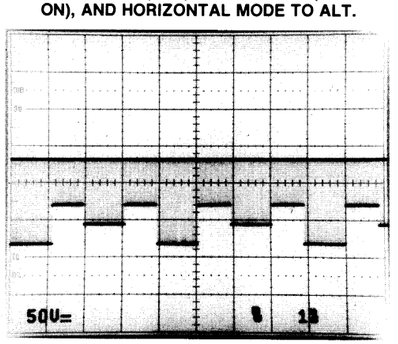

0 V

7C

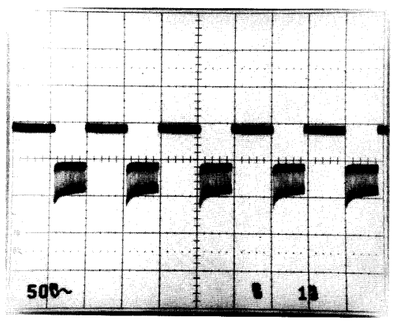

SET READOUT CONTROL CCW (OFF) AND A INTEN CONTROL CW (FULLY ON).

7D

0 V

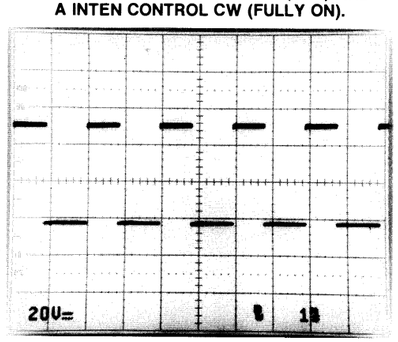

SET READOUT CONTROL CCW (OFF), A INTEN CCW (OFF), B ENTEN CW (FULLY ON), AND HORIZONTAL MODE TO ALT.

7I

0 V

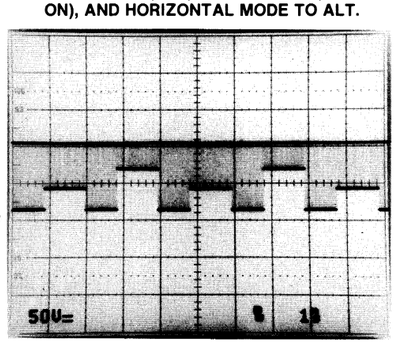

6555-44

Z-AXIS, CRT, PROBE ADJUST AND CONTROL MUX DIAGRAM 7
(SN B715000 AND ABOVE, 2246 1Y
SN B120000 AND ABOVE, 2246 MOD A)

ASSEMBLY A8

CIRCUIT NUMBER	SCHEM LOCATION	BOARD LOCATION	CIRCUIT NUMBER	SCHEM LOCATION	BOARD LOCATION	CIRCUIT NUMBER	SCHEM LOCATION	BOARD LOCATION	CIRCUIT NUMBER	SCHEM LOCATION	BOARD LOCATION
R901	5A	1A	R902	6A	1C	R903	6A	1F	R905	4A	1E

Partial A10 also shown on diagram 13.

ASSEMBLY A10

C910	2L	10B	DS2702	7L	9M	R925	3H	9B	R1024	7K	9M
C935	2H	7B	DS2703	5K	9M	R930	1H	8B	R1025	5L	8L
C1001	5C	7L	DS2704	6K	9M	R931	1H	7A	R1027	5L	7L
C1002	6C	8M				R932	1H	7B	R1028	5L	8L
C1003	6C	8M	J15	2K	7A	R933	1H	7B	R1029	6L	7L
C1004	7C	7L	J927	2L	11B	R934	2G	7B	R1111	6F	10F
C2703	7G	7M				R935	2H	7B	R1114	6F	10E
C2704	6G	7M	P8	8A	10N	R936	1J	7A	R1115	5G	10E
C2705	7G	7N	P9	3M	8N	R937	2J	7A	R1116	5G	11E
C2706	7H	6N	P9	4M	9N	R938	1G	7B	R1117	5G	10E
C2707	7H	7M	P2302	1A	10D	R939	2G	7B	R1118	5G	11E
C2708	6H	7N	P2304	3A	10D	R940	2J	7A	R1119	4H	11E
C2710	7J	7N				R941	1H	8A	R1740	5L	11E
C2711	7K	8M	Q905	4E	10A	R1001	5C	4L	R1741	5L	8M
C2712	7K	8N	Q907	4E	10A	R1002	6C	5M	R1742	6L	8L
C2713	8K	6N	Q908	4F	10A	R1003	6C	4M	R1743	6H	8L
C2715	6G	10L	Q1001	5D	4L	R1004	7C	4L	R1745	7J	7L
C2716	5H	10L	Q1002	6D	4L	R1005	5C	8L	R1750	6J	8M
C2717	5H	11L	Q1003	6D	4L	R1006	6D	7L	R1751	8K	6M
C2719	5J	10M	Q1004	7D	4L	R1007	7D	8L	R1756	8L	6L
C2720	6J	8L	Q1005	8D	7L	R1008	7D	8L	R1760	8L	6L
C2721	6J	6K	Q2701	7H	7N	R1009	8C	7L	R1761	8K	6M
C2723	6E	7L	Q2702	7H	7M	R1010	8B	7L	R1764	7L	7L
C2724	8K	10M	Q2703	7H	7N	R1020	5B	7L	R1765	7L	8L
C2759	7F	7M	Q2704	8H	6N	R1021	5B	7L	R1766	6L	8L
C2783	3L	8N	Q2705	7G	7M	R1022	6B	7L	R1767	6L	8L
C2784	5L	6N	Q2706	8F	7M	R1023	6B	7L	R1768	6L	7L
C2785	5L	8N	Q2707	7F	6M	R1024	7B	8L	R1769	6L	8L
			Q2708	5E	6L	R1025	7B	8L	R1770	7L	7L
CR935	2J	7A	Q2709	5F	6L	R1028	5D	4L	R1868	6M	6M
CR936	2J	7A	Q2711	5G	10L	R2701	7E	8L	R2699	7E	11K
CR1001	5D	5L	Q2712	5H	10L	R2702	7F	8L	R2700	6M	11K
CR1002	7D	5L	Q2713	5H	11L	R2703	6E	7M	R2701	6L	11K
CR1003	8C	8L	Q2715	7F	6M	R2704	6E	7L	R2702	6L	11K
CR1004	7C	7L				R2705	7F	7L	R2703	6L	11K
CR1005	5D	3L	R503	2B	10C	R2706	7F	7M	R2704	6L	11K
CR2701	7K	9M	R505	5B	9C	R2708	6G	7M	R2705	6L	11K
CR2702	8K	9M	R506	6B	9C	R2709	6G	7M	R2706	6L	11K
CR2703	7K	8N	R507	6B	9C	R2710	6G	6M	R2707	6L	11K
CR2704	7K	6N	R508	2B	10C	R2711	7G	7M	R2708	6L	11K
CR2705	8G	6M	R510	2B	10C	R2712	7G	7M	R2709	6L	11K
CR2707	7F	7L	R512	3B	10C	R2713	7G	7M	R2710	6L	11K
CR2713	6H	10L	R906	4E	10B	R2714	7G	7M	R2711	6L	11K
CR2714	5H	11L	R907	4E	10A	R2715	7G	7M	R2712	6L	11K
CR2715	5J	9L	R908	4F	10A	R2716	6G	7M	R2713	6L	11K
CR2716	5K	9M	R909	5D	8B	R2717	6H	7M	R2714	6L	11K
CR2717	6K	9M	R910	2L	10B	R2718	7J	7M	R2715	6L	11K
CR2718	5J	8L	R911	2L	8A	R2719	7J	8M	R2716	6L	11K
			R920	3G	8B	R2720	7J	8M	R2717	6L	11K
DS901	4E	8B	R921	3G	8B	R2721	7K	9M	R2718	6L	11K
DS902	4F	9B	R922	3H	9C	R2722	7K	9L	R2719	6L	11K
DS903	4F	11B	R923	3H	9C	R2723	7K	9M	R2720	6L	11K
DS2701	8L	9N	R924	2H	9C						

Partial A10 also shown on diagrams 1, 2, 3, 4, 5, 6 and 13.

OTHER PARTS

J16	7A	CHASSIS	P26	1L	CHASSIS	P27	9I	CHASSIS	W1	6A	CHASSIS

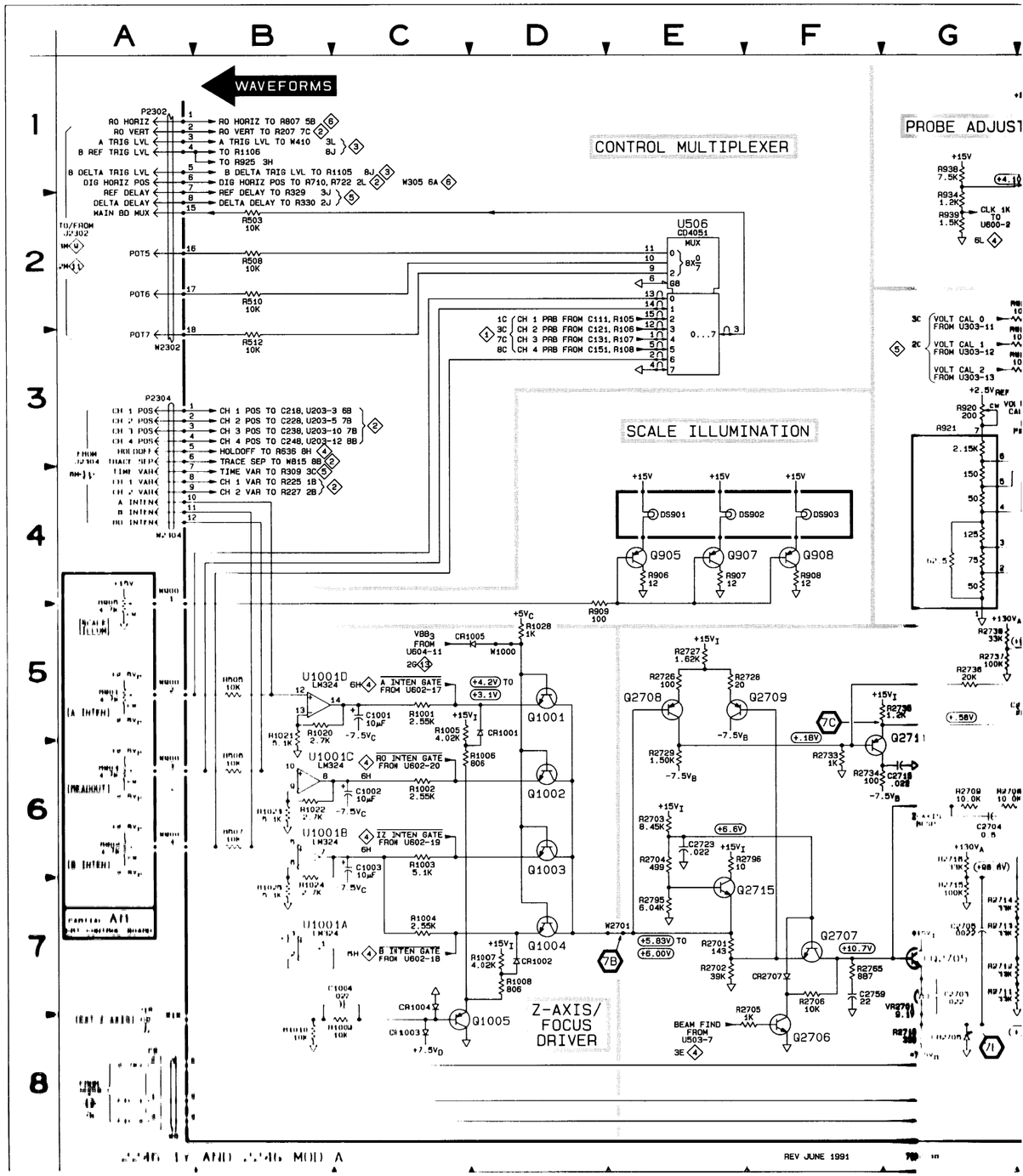

WAVEFORMS

CONTROL MULTIPLEXER

SCALE ILLUMINATION

PROBE ADJUST

VOLTS CAL SIGNAL SOURCE

Z-AXIS/ FOCUS DRIVER

Z-AXIS & AUTO FOCUS AMPLIFIERS

C R T

PARTIAL A8 CRT CONTROL BOARD

PARTIAL A10 MAIN BOARD

Static Sensitive Devices
See Maintenance Section

CIRCUIT NUMBER	+15V	+7.5V	+5V	GND	-5V	-7.5V
U506			16	8		7
U930	8					4
U931			16	8	7	
U1001		4				11

Z-AXIS, CRT, PROBE ADJUST AND CONTROL MUX DIAGRAM 7
(SN B714999 AND BELOW, 2246 1Y
SN B119999 AND BELOW, 2246 MOD A)

ASSEMBLY A8

CIRCUIT NUMBER	SCHEM LOCATION	BOARD LOCATION	CIRCUIT NUMBER	SCHEM LOCATION	BOARD LOCATION	CIRCUIT NUMBER	SCHEM LOCATION	BOARD LOCATION	CIRCUIT NUMBER	SCHEM LOCATION	BOARD LOCATION
R901	5A	1A	R903	6A	1F	W900	4A	1E			
R902	6A	1C	R905	4A	1H						

Partial A8 also shown on diagram 13.

ASSEMBLY A10

CIRCUIT NUMBER	SCHEM LOCATION	BOARD LOCATION	CIRCUIT NUMBER	SCHEM LOCATION	BOARD LOCATION	CIRCUIT NUMBER	SCHEM LOCATION	BOARD LOCATION	CIRCUIT NUMBER	SCHEM LOCATION	BOARD LOCATION
C910	2L	10B	DS2701	8L	9N	R924	2H	9C	R2724	7K	9M
C935	2H	7B	DS2702	7L	9M	R930	1H	8A	R2726	5E	6L
C1001	5C	7L	DS2703	5K	9M	R931	1H	7A	R2727	5E	7L
C1002	6C	7M	DS2704	6K	9M	R932	1H	7A	R2728	5E	6L
C1003	6C	8M				R933	1H	7B	R2729	6E	7L
C1004	7C	7L	J15	2K	6A	R934	2G	7B	R2733	6F	9L
C2703	7G	6M	J927	2L	10A	R935	2H	7B	R2734	6F	9L
C2704	6G	7M				R936	1J	7A	R2735	5G	9L
C2705	7G	7N	P8	8A	10M	R937	2J	7A	R2736	5G	10L
C2706	7H	6N	P9	3M	8N	R938	1G	7B	R2737	5G	10K
C2707	7H	7M	P9	4M	8N	R939	2G	7B	R2738	5G	10L
C2708	6H	7N	P2302	1A	10D	R940	2J	7A	R2739	4H	10L
C2710	7J	7N	P2304	3A	10D	R941	1H	8A	R2740	5J	10L
C2711	7K	8M				R1001	5C	3K	R2741	5J	8M
C2712	7K	8N	Q905	4E	10A	R1002	6C	3K	R2742	6J	8L
C2713	8K	6N	Q907	4E	10A	R1003	6C	3L	R2743	6H	8L
C2715	6G	10L	Q908	4F	10A	R1004	7C	3K	R2745	7J	7N
C2716	5H	10L	Q1001	5D	3K	R1005	5C	7L	R2750	6J	8M
C2717	5H	10L	Q1002	6D	3K	R1006	6D	7L	R2751	6K	9M
C2719	5J	10M	Q1003	6D	3L	R1007	7D	8L	R2758	6L	9L
C2720	6J	8L	Q1004	7D	3K	R1008	7D	7L	R2760	6L	10M
C2721	6J	6K	Q1005	8D	7L	R1009	8C	7K	R2765	7F	7M
C2723	6E	7L	Q2701	7H	7N	R1010	8B	7K	R2784	3L	7N
C2724	8K	8M	Q2702	7H	7M	R1020	5B	7L	R2785	3L	8N
C2758*	6K	10L	Q2703	7H	6M	R1021	5B	7L	R2786	4L	6N
C2759	7F	7M	Q2704	8H	6N	R1022	6B	7L	R2787	5L	6N
C2783	3L	8N	Q2705	7G	6M	R1023	6B	7L	R2788	5L	6N
C2784	5L	6N	Q2706	8F	7M	R1024	7B	7L	R2789	5L	8N
C2785	5L	8N	Q2707	7F	6M	R1025	7B	7L	R2795	7E	7L
			Q2708	5E	6L	R1028	5D	4K	R2796	6F	6M
CR935	2J	7A	Q2709	5F	6L	R2701	7E	6L			
CR936	2J	7A	Q2711	5G	10L	R2702	7E	6L	U506	2E	9C
CR1001	5D	4K	Q2712	5H	10L	R2703	6E	7L	U930A	1H	7B
CR1002	7D	4K	Q2713	5H	10L	R2704	6E	7L	U930B	2H	7B
CR1003	8C	7L	Q2715	7F	6M	R2705	7F	7L	U931	3H	9B
CR1004	7C	7L				R2706	7F	7M	U1001B	6B	7L
CR1005	5D	5M	R503	2B	10C	R2708	6G	7M	U1001C	6B	7L
CR2701	7K	9M	R505	5B	9C	R2709	6G	7M	U1001D	5B	7L
CR2702	8K	9M	R506	6B	9C	R2710	8G	6M	U1101A	7B	2M
CR2703	7K	8N	R507	6B	9C	R2711	7G	6N			
CR2704	7K	6N	R508	2B	10C	R2712	7G	6M	VR2701	7G	6M
CR2705	8G	6M	R510	2B	10C	R2713	7G	7M			
CR2707	7F	7L	R512	3B	10C	R2714	7G	7M	W9	3M	7K
CR2713	6H	10L	R906	4E	10B	R2715	7G	7M	W9	8A	7K
CR2714	5H	10L	R907	4E	10A	R2716	6G	7M	W9	8M	7K
CR2715	5J	9L	R908	4F	10A	R2717	6H	7M	W16	8A	7K
CR2716	5K	8M	R909	5D	8B	R2718	7J	7M	W1000	5D	3L
CR2717	6K	9M	R910	2L	10B	R2719	7J	7N	W1010*	7D	4K
CR2718	5J	8L	R911	2L	8A	R2720	7J	8N	W1288	8J	6J
			R920	3G	8B	R2721	7K	9N	W2302	3A	10D
DS901	4E	8A	R921	3G	8B	R2722	7K	6L	W2304	4A	10D
DS902	4F	9A	R922	3H	9C	R2723	7K	9M	W2701	7E	5K
DS903	4F	10A	R923	3H	9C						

Partial A10 also shown on diagrams 1, 2, 3, 4, 5, 6 and 13.

OTHER PARTS

CIRCUIT NUMBER	SCHEM LOCATION	BOARD LOCATION	CIRCUIT NUMBER	SCHEM LOCATION	BOARD LOCATION	CIRCUIT NUMBER	SCHEM LOCATION	BOARD LOCATION	CIRCUIT NUMBER	SCHEM LOCATION	BOARD LOCATION
J16	7A	CHASSIS	P26	1L	CHASSIS	P27	2L	CHASSIS	V1	1M	CHASSIS

***See Parts List for serial number ranges.**

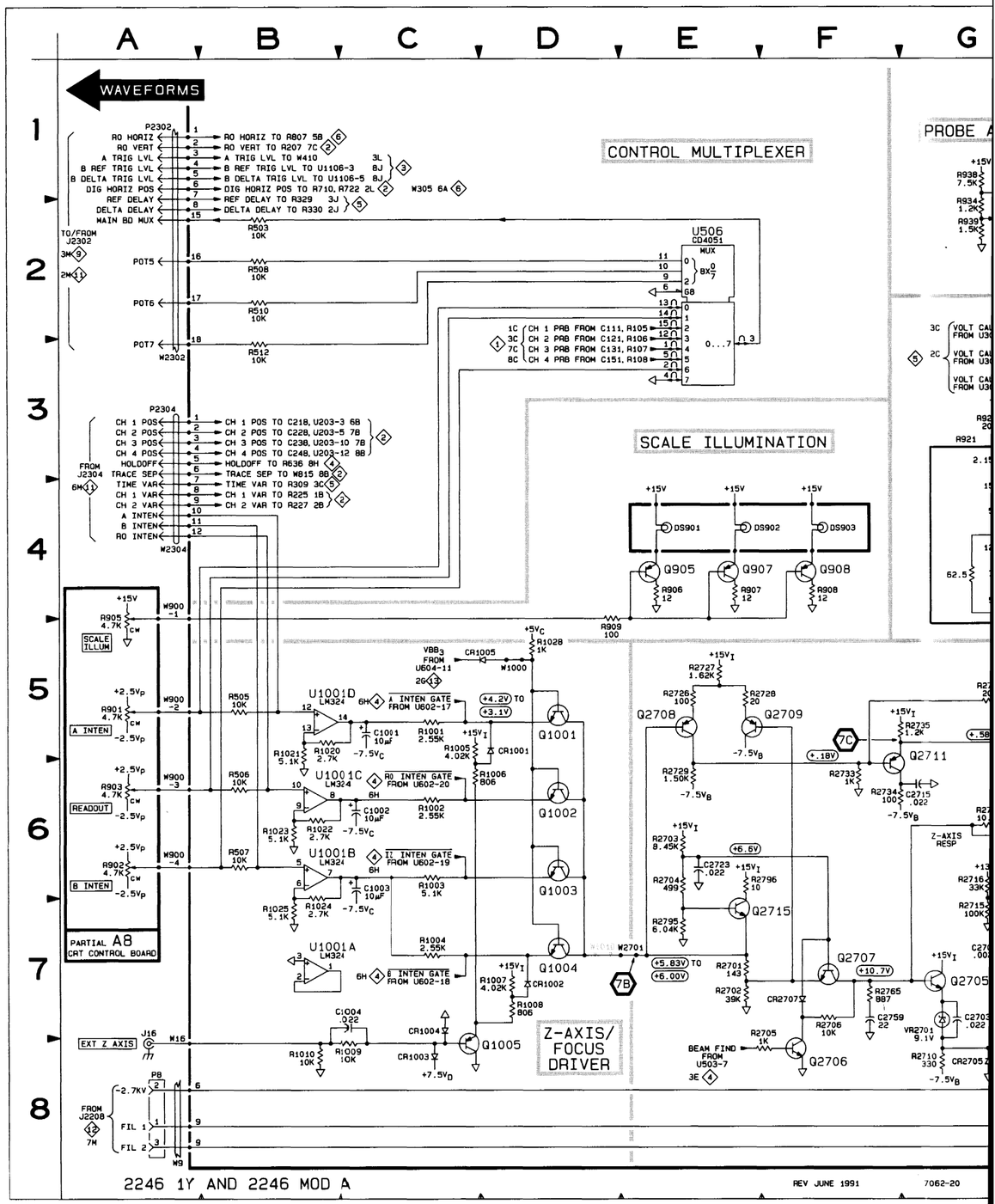

	SCHEM LOCATION	BOARD LOCATION

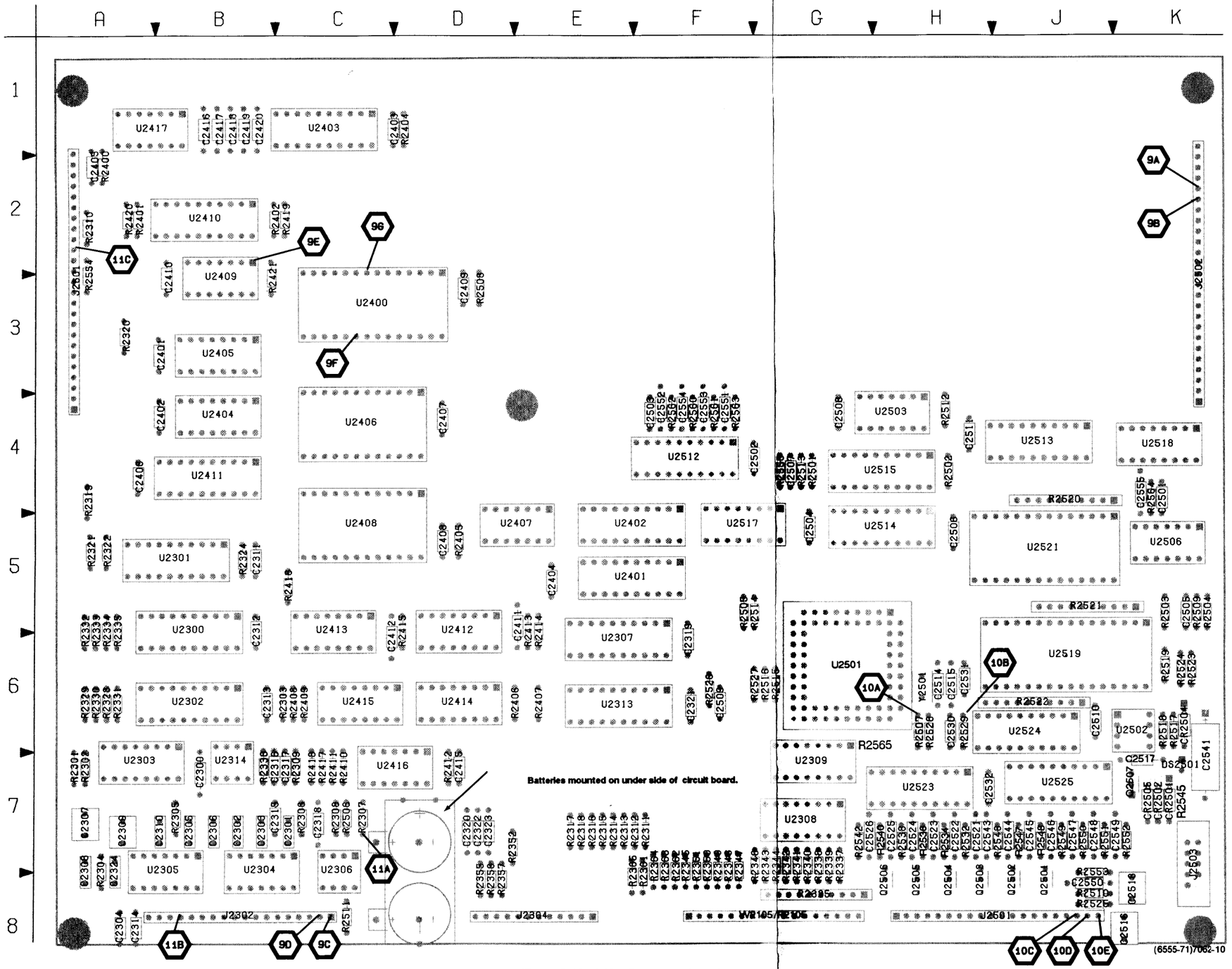

Figure 9-10. A16—Processor board.

CIRCUIT NUMBER	S NU
BT2501	
BT2502	
C2300	
C2301	
C2302	
C2303	
C2304	
C2305	
C2306	
C2307	
C2308	
C2309	
C2310	
C2311	
C2312	
C2313	
C2314	
C2315	
C2316	
C2317	
C2318	
C2319	
C2320	
C2321	
C2322	
C2323	
C2324	
C2401	
C2402	
C2403	
C2404	
C2405	
C2406	
C2407	
C2408	
C2409	
C2410	
C2411	
C2412	
C2415	
C2416	
C2417	
C2418	
C2419	
C2420	
C2501	
C2502	
C2503	
C2504	
C2505	
C2506	
C2507	
C2508	
C2509	
C2510	
C2511	

Static Sensitive Devices
See Maintenance Section

COMPONENT NUMBER EXAMPLE

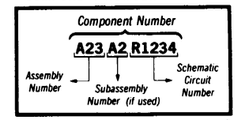

Chassis-mounted components have no Assembly Number prefix—see end of Replaceable Electrical Parts List.

A16—PROCESSOR BOARD

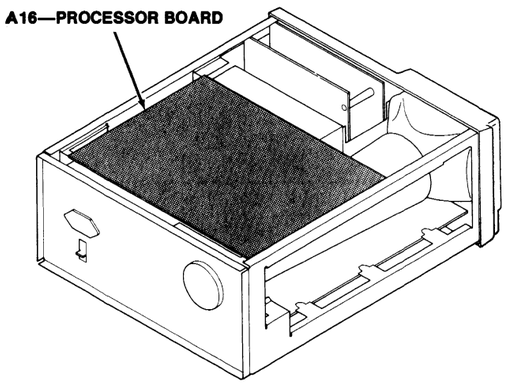

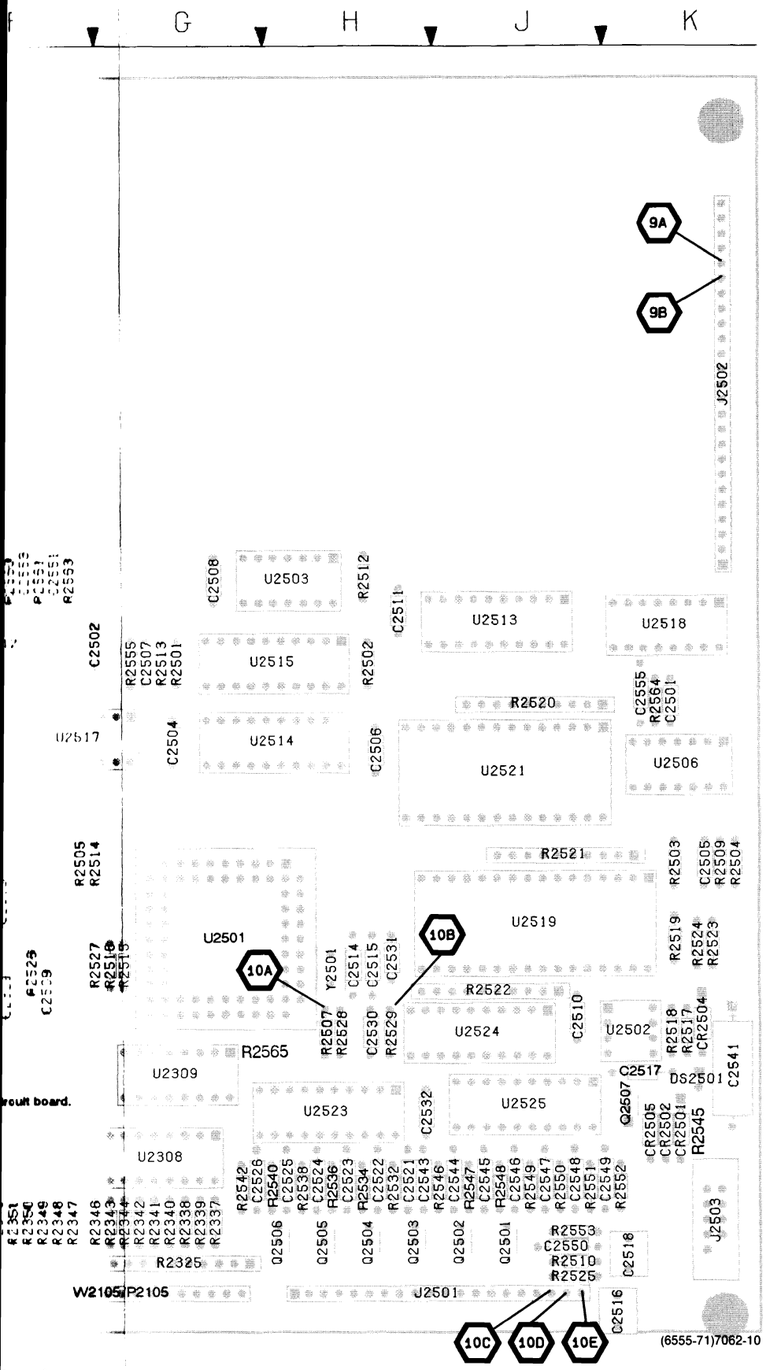

board.

Static Sensitive Devices
See Maintenance Section

COMPONENT NUMBER EXAMPLE

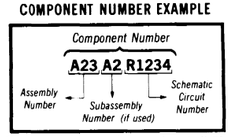

Chassis-mounted components have no Assembly Number prefix—see end of Replaceable Electrical Parts List.

A16—PROCESSOR BOARD

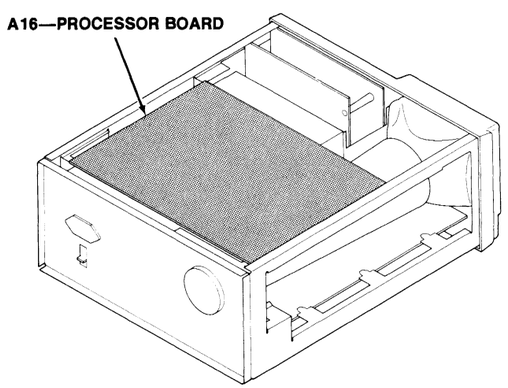

A16—PROCESSOR BOARD

CIRCUIT NUMBER	SCHEM NUMBER	CIRCUIT NUMBER	SCHEM NUMBER	CIRCUIT NUMBER	SCHEM NUMBER	CIRCUIT NUMBER	SCHEM NUMBER	CIRCUIT NUMBER	SCHEM NUMBER	CIRCUIT NUMBER	SCHEM NUMBER
BT2501	8	C2514	8	Q2506	10	R2363	11	R2540	10	U2408	14
BT2502	8	C2515	8	Q2507	8	R2364	11	R2542	10	U2409	9
		C2516	8			R2365	11	R2546	10	U2409	14
C2300	11	C2517	8	R2301	11	R2400	9	R2547	10	U2410	9
C2301	11	C2518	8	R2302	11	R2401	9	R2548	10	U2410	14
C2302	11	C2521	10	R2303	11	R2402	9	R2549	10	U2411	9
C2303	11	C2522	10	R2304	11	R2404	9	R2550	10	U2411	14
C2304	14	C2523	10	R2305	11	R2405	9	R2551	10	U2412	9
C2305	11	C2524	10	R2306	11	R2406	9	R2552	10	U2412	14
C2306	11	C2525	10	R2307	11	R2407	9	R2553	10	U2413	9
C2307	11	C2526	10	R2308	11	R2408	9	R2554	8	U2413	14
C2308	11	C2530	14	R2309	14	R2409	9	R2555	8	U2414	9
C2309	11	C2531	14	R2310	11	R2410	9	R2560	8	U2414	14
C2310	11	C2532	14	R2311	11	R2411	9	R2561	8	U2415	9
C2311	14	C2541	14	R2312	11	R2412	14	R2562	8	U2415	14
C2312	14	C2543	10	R2313	11	R2413	9	R2563	8	U2416	9
C2313	14	C2544	10	R2314	11	R2414	9	R2564	8	U2416	14
C2314	14	C2545	10	R2315	11	R2415	9			U2417	9
C2315	14	C2546	10	R2316	11	R2416	9	U2300	11	U2417	14
C2316	14	C2547	10	R2317	11	R2417	9	U2300	14	U2501	8
C2317	14	C2548	10	R2318	11	R2418	9	U2301	11	U2501	14
C2318	11	C2549	10	R2319	11	R2419	9	U2301	14	U2502	8
C2319	14	C2550	10	R2320	11	R2420	9	U2302	11	U2502	14
C2320	11	C2551	8	R2321	11	R2421	9	U2302	14	U2503	8
C2321	14	C2552	8	R2322	11	R2501	8	U2303	11	U2503	14
C2322	11	C2553	8	R2324	11	R2502	8	U2303	14	U2506	8
C2323	11	C2554	8	R2325	11	R2503	8	U2304	11	U2506	14
C2324	11	C2555	8	R2328	11	R2504	8	U2304	14	U2512	8
C2401	14			R2329	11	R2505	8	U2305	11	U2512	14
C2402	14	CR2501	8	R2330	11	R2506	8	U2305	14	U2513	8
C2403	14	CR2502	8	R2331	11	R2507	8	U2306	11	U2513	14
C2404	14	CR2504	8	R2332	11	R2508	8	U2306	14	U2514	8
C2405	14	CR2505	8	R2333	11	R2509	8	U2308	11	U2514	14
C2406	14			R2334	11	R2510	8	U2308	14	U2515	8
C2407	14	DS2501	8	R2335	11	R2511	8	U2309	11	U2515	14
C2408	14			R2336	11	R2512	8	U2309	14	U2517	8
C2409	14	J2302	9	R2337	11	R2513	8	U2313	11	U2517	14
C2410	14	J2302	11	R2338	11	R2514	8	U2313	14	U2518	8
C2411	9	J2302	14	R2339	11	R2515	8	U2314	11	U2518	14
C2412	9	J2304	11	R2340	11	R2516	8	U2314	14	U2519	8
C2415	14	J2501	10	R2341	11	R2517	8	U2400	9	U2519	14
C2416	9	J2501	14	R2342	11	R2518	8	U2400	14	U2521	8
C2417	9	J2502	8	R2343	11	R2519	8	U2401	9	U2523	10
C2418	9	J2502	9	R2344	11	R2520	8	U2401	14	U2523	14
C2419	9	J2502	14	R2345	11	R2521	8	U2402	9	U2524	10
C2420	9	J2503	10	R2346	11	R2522	8	U2402	14	U2524	14
C2501	14	J2601	11	R2347	11	R2523	8	U2403	9	U2525	10
C2502	14	J2601	14	R2348	11	R2524	8	U2403	14	U2525	14
C2503	14			R2349	11	R2525	10	U2404	9		
C2504	14	P2105	11	R2350	11	R2526	8	U2404	14	W2105	11
C2505	14	P2105	14	R2351	11	R2527	8	U2405	9	W2105	14
C2506	14			R2352	11	R2528	10	U2405	14		
C2507	14	Q2501	10	R2355	11	R2529	10	U2406	9	Y2501	8
C2508	14	Q2502	10	R2356	11	R2532	10	U2406	14		
C2509	14	Q2503	10	R2357	11	R2534	10	U2407	9		
C2510	14	Q2504	10	R2361	11	R2536	10	U2407	14		
C2511	14	Q2505	10	R2362	11	R2538	10	U2408	9		

MEASUREMENT PROCESSOR DIAGRAM 8

ASSEMBLY A16

CIRCUIT NUMBER	SCHEM LOCATION	BOARD LOCATION	CIRCUIT NUMBER	SCHEM LOCATION	BOARD LOCATION	CIRCUIT NUMBER	SCHEM LOCATION	BOARD LOCATION	CIRCUIT NUMBER	SCHEM LOCATION	BOARD LOCATION
BT2501	6G	7D				R2516	7D	6G	U2501	1C	6G
BT2501	6H	7D	J2502	1B	3J	R2517	8F	6K	U2502	7A	6K
BT2502	6G	8D	J2502	3M	3J	R2518	8F	6K	U2503A	2F	4H
						R2519	6J	6K	U2503B	2D	4H
C2514	6B	6H	Q2507	7F	7K	R2520	5H	4J	U2503C	8G	4H
C2515	6B	6H				R2521	5E	5J	U2503D	1F	4H
C2516	5J	8K	R2501	2D	4G	R2522	3H	6J	U2506A	7D	5K
C2517	8A	7K	R2502	1D	4H	R2523	7A	6K	U2506B	7D	5K
C2518	8A	8K	R2503	7E	5K	R2524	8B	6K	U2506C	7B	5K
C2551	4M	4F	R2504	6B	5K	R2526	7D	6F	U2506D	2E	5K
C2552	4M	4F	R2505	8D	5F	R2527	7D	6G	U2512	3J	4F
C2553	3M	4F	R2506	6H	7C	R2545*	5J	7K	U2513	3G	4J
C2554	3M	4F	R2507	6D	6H	R2554	2B	2A	U2514	2G	5H
C2555	5M	4K	R2508	2B	3D	R2555	1B	4G	U2515	1E	4H
			R2509	1B	5K	R2560	3M	4F	U2517	4L	5F
CR2501	5J	7K	R2510	2B	8J	R2561	3M	4F	U2518	5L	4K
CR2502	5H	7K	R2511	1B	8C	R2562	3M	4F	U2519	6L	6J
CR2504	8E	6K	R2512	1E	4H	R2563	4M	4F	U2521	7J	5J
CR2505	7F	7K	R2513	1D	4G	R2564	5M	4K			
			R2514	3D	5F	R2565	6B	6G	Y2501	6B	6H
DS2501	8E	7K	R2515	8D	6G						

Partial A16 also shown on diagrams 9, 10, 11, 14.

***See Parts List for serial number ranges.**

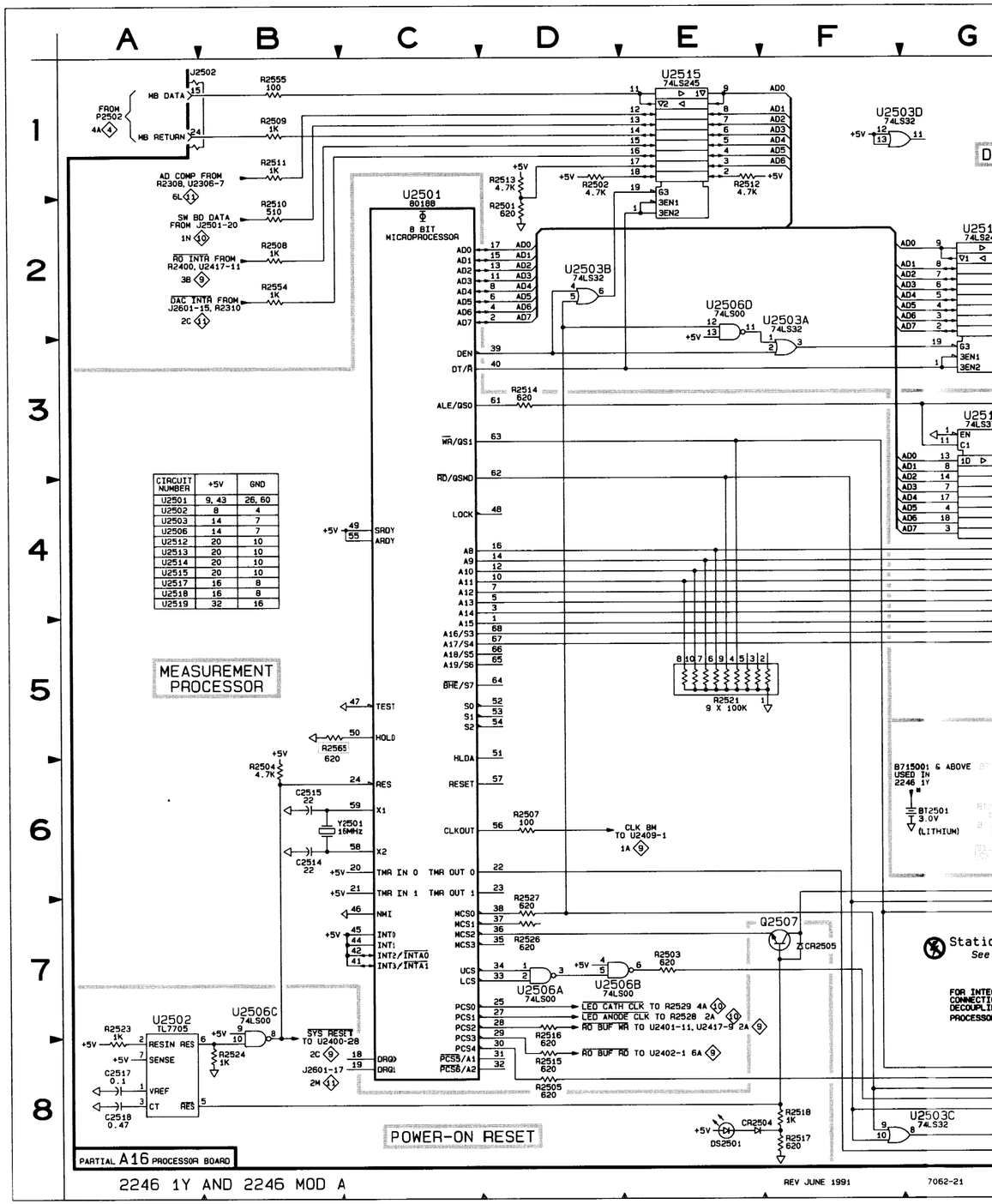

CIRCUIT NUMBER	+5V	GND
U2501	9, 43	26, 60
U2502	8	4
U2503	14	7
U2506	14	7
U2512	20	10
U2513	20	10
U2514	20	10
U2515	20	10
U2517	16	8
U2518	16	8
U2519	32	16

	SCHEM LOCATION	BOARD LOCATION
	1C	6G
	7A	6K
	2F	4H
	2D	4H
	8G	4H
	1F	4H
	7D	5K
	7D	5K
	7B	5K
	2E	5K
	3J	4F
	3G	4J
	2G	5H
	1E	4H
	4L	5F
	5L	4K
	6L	6J
	7J	5J
	6B	6H

CIRCUIT NUMBER	+5V	GND
U2501	9, 43	26, 60
U2502	8	4
U2503	14	7
U2506	14	7
U2512	20	10
U2513	20	10
U2514	20	10
U2515	20	10
U2517	16	8
U2518	16	8
U2519	32	16

DATA BUFFERS

ADDRESS LATCHES

MEASUREMENT PROCESSOR

RAM

ADDRESS DECODERS

ROM

POWER-ON RESET

Static Sensitive Devices
See Maintenance Section

FOR INTEGRATED CIRCUIT SUPPLY CONNECTIONS AND POWER SUPPLY DECOUPLING NETWORKS SEE: PROCESSOR BOARD POWER DISTRIBUTION 14

PARTIAL A16 PROCESSOR BOARD

2246 1Y AND 2246 MOD A

REV JUNE 1991

7062-21

MEASUREMENT PROCESSOR 8

WAVEFORMS FOR DIAGRAM 9

9A

.2 V

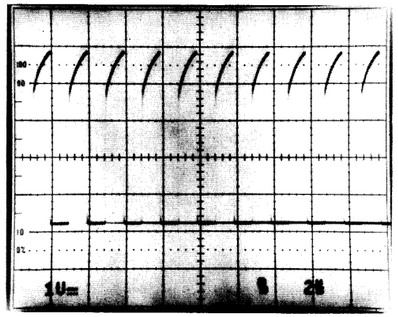

9B

0 V

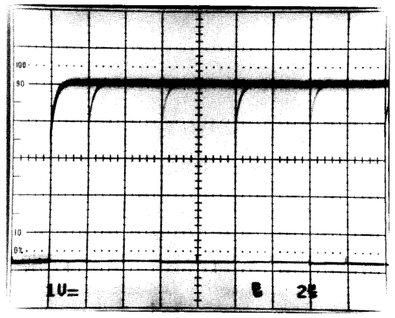

9C

0 V

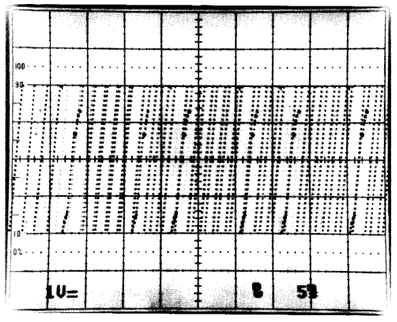

9D

0 V

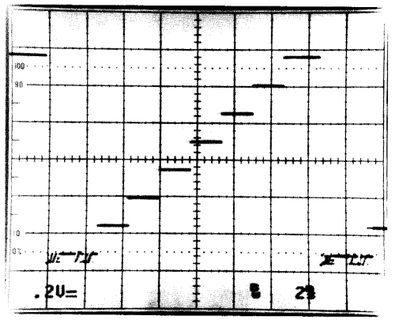

9E

0 V

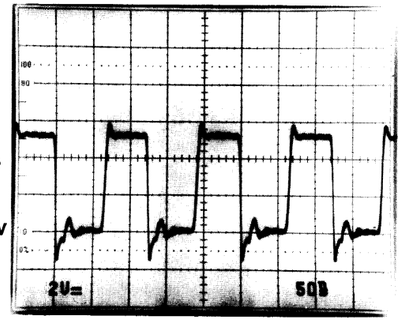

9F

0 V

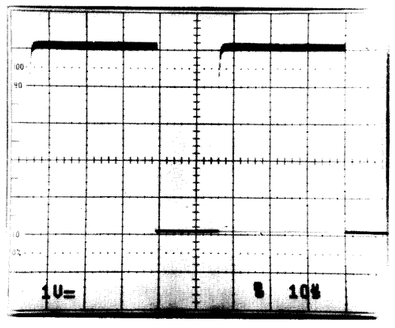

9G

0 V

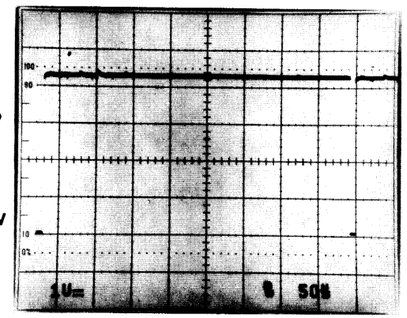

(6555-72)6557-88

MORE

READOUT SYSTEM DIAGRAM 9

ASSEMBLY A16

CIRCUIT NUMBER	SCHEM LOCATION	BOARD LOCATION	CIRCUIT NUMBER	SCHEM LOCATION	BOARD LOCATION	CIRCUIT NUMBER	SCHEM LOCATION	BOARD LOCATION	CIRCUIT NUMBER	SCHEM LOCATION	BOARD LOCATION
C2411	6J	5E	R2404	1G	1D	R2420	2M	2A	U2410	2E	2B
C2412	4J	5C	R2405	4G	5D	R2421	1A	2B	U2411	7F	4B
C2416	2H	1B	R2406	5K	6D				U2412	4J	5D
C2417	2J	1B	R2407	5K	6E	U2400	2C	3C	U2413	3J	5C
C2418	2J	1B	R2408	3K	6C	U2401	4B	5F	U2414	4L	6D
C2419	2J	1B	R2409	3K	6C	U2402	6B	5F	U2415	3L	6C
C2420	2K	1B	R2410	5M	7C	U2403	1G	1C	U2416A	5L	7D
			R2411	3M	7C	U2404	5E	4B	U2416B	3L	7D
J2302	3M	8B	R2413	5J	5E	U2405	6F	3B	U2416C	3M	7D
J2502	1A	3J	R2414	6J	5E	U2406	5G	4C	U2416D	5M	7D
J2502	1M	3J	R2415	4J	5D	U2407A	4F	5E	U2417A	1B	1A
			R2416	4J	5C	U2407B	3F	5E	U2417B	1C	1A
R2400	2B	2A	R2417	4M	7C	U2408	4G	5C	U2417C	2B	1A
R2401	2M	2A	R2418	4M	7C	U2409A	1B	3B	U2417D	3B	1A
R2402	2F	2B	R2419	2M	2C	U2409B	1D	3B			

Partial A16 also shown on diagrams 8, 10, 11 and 14.

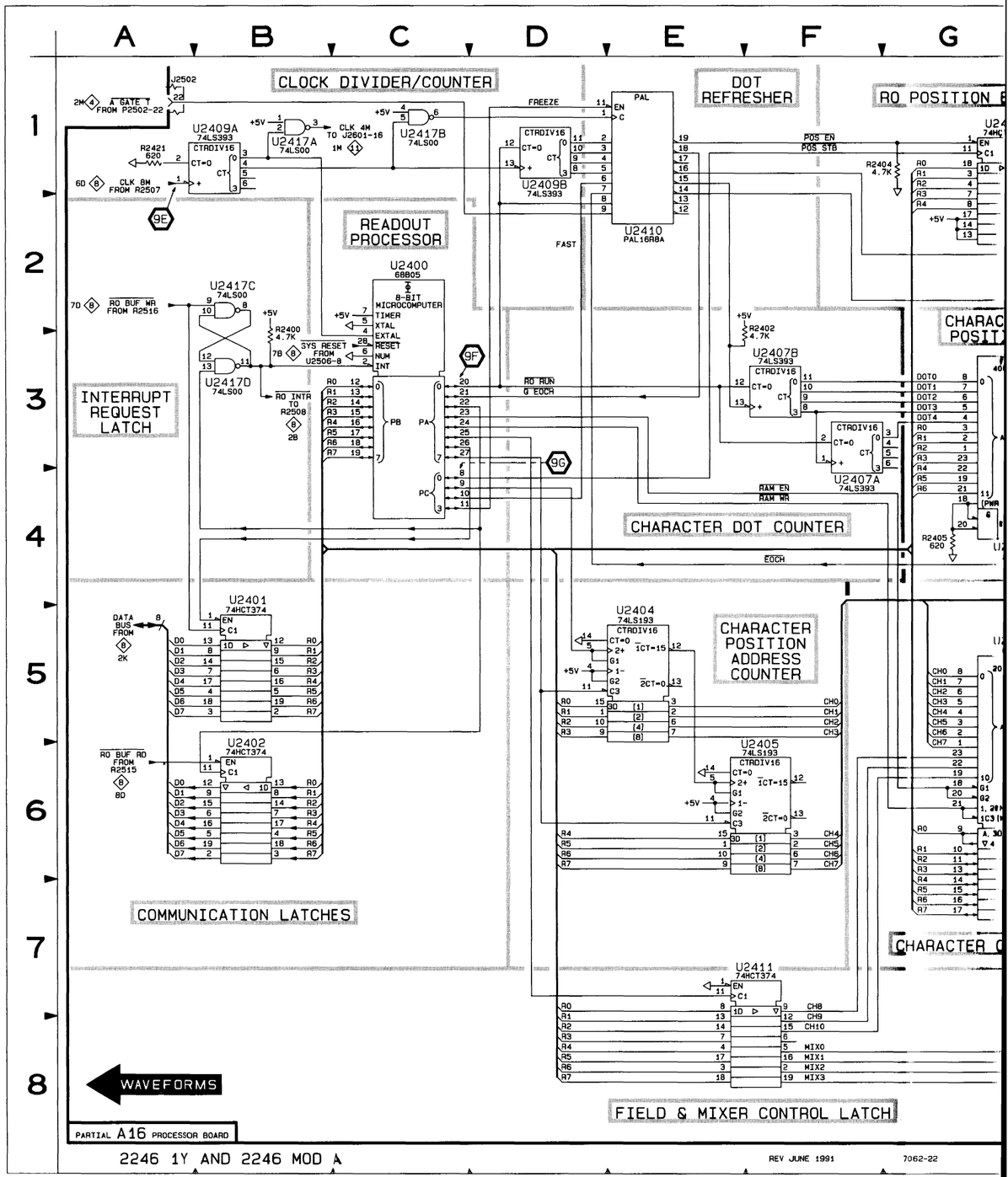

	SCHEM LOCATION	BOARD LOCATION
	2E	2B
	7F	4B
	4J	5D
	3J	5C
	4L	6D
	3L	6C
	5L	7D
	3L	7D
	3M	7D
	5M	7D
	1B	1A
	1C	1A
	2B	1A
	3B	1A

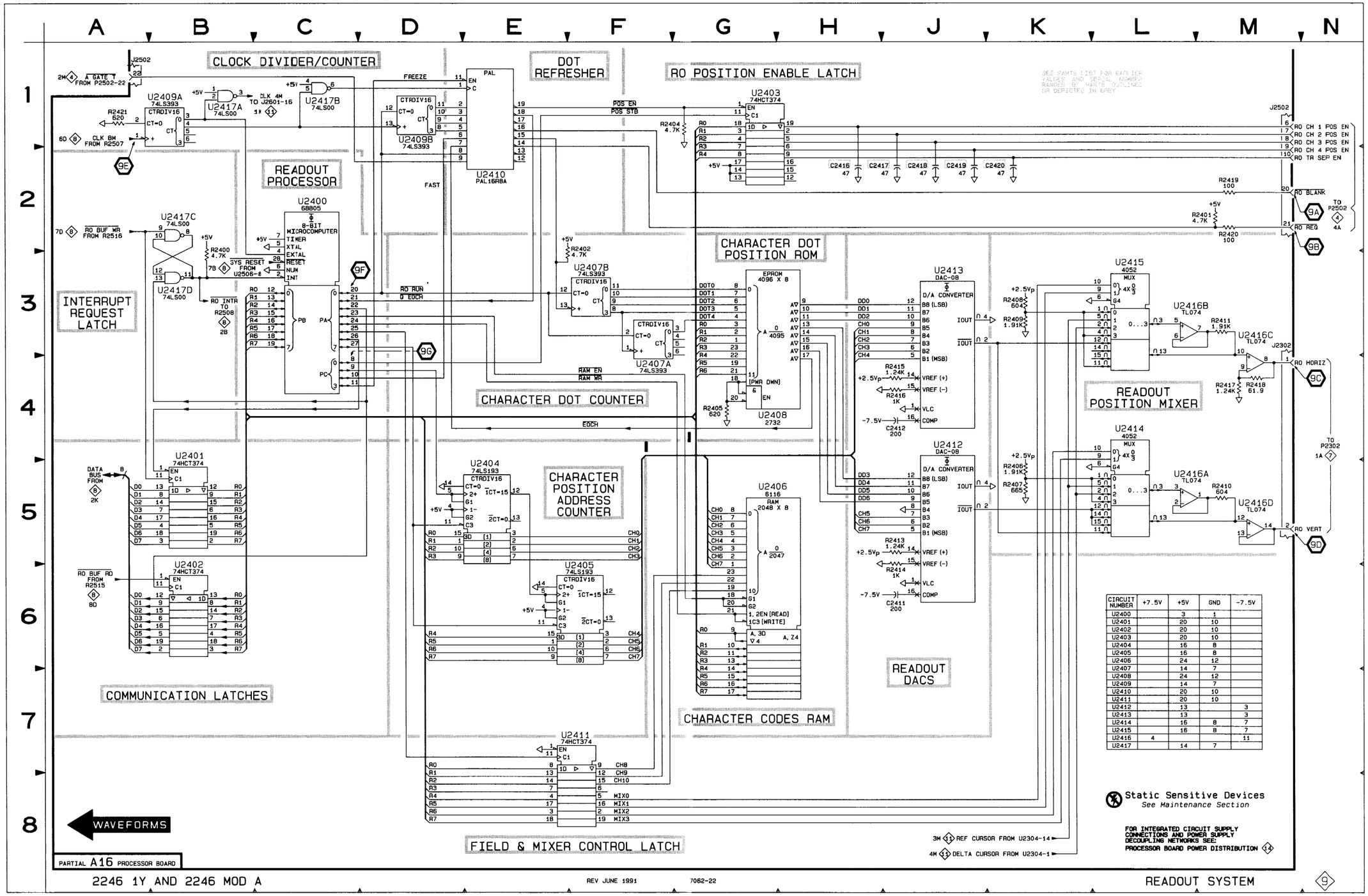

CIRCUIT NUMBER	+7.5V	+5V	GND	-7.5V
U2400		3	1	
U2401		20	10	
U2402		20	10	
U2403		20	10	
U2404		16	8	
U2405		16	8	
U2406		24	12	
U2407		14	7	
U2408		24	12	
U2409		14	7	
U2410		20	10	
U2411		20	10	
U2412		13		3
U2413		13		3
U2414		16	8	7
U2415		16	8	7
U2416	4			11
U2417		14	7	

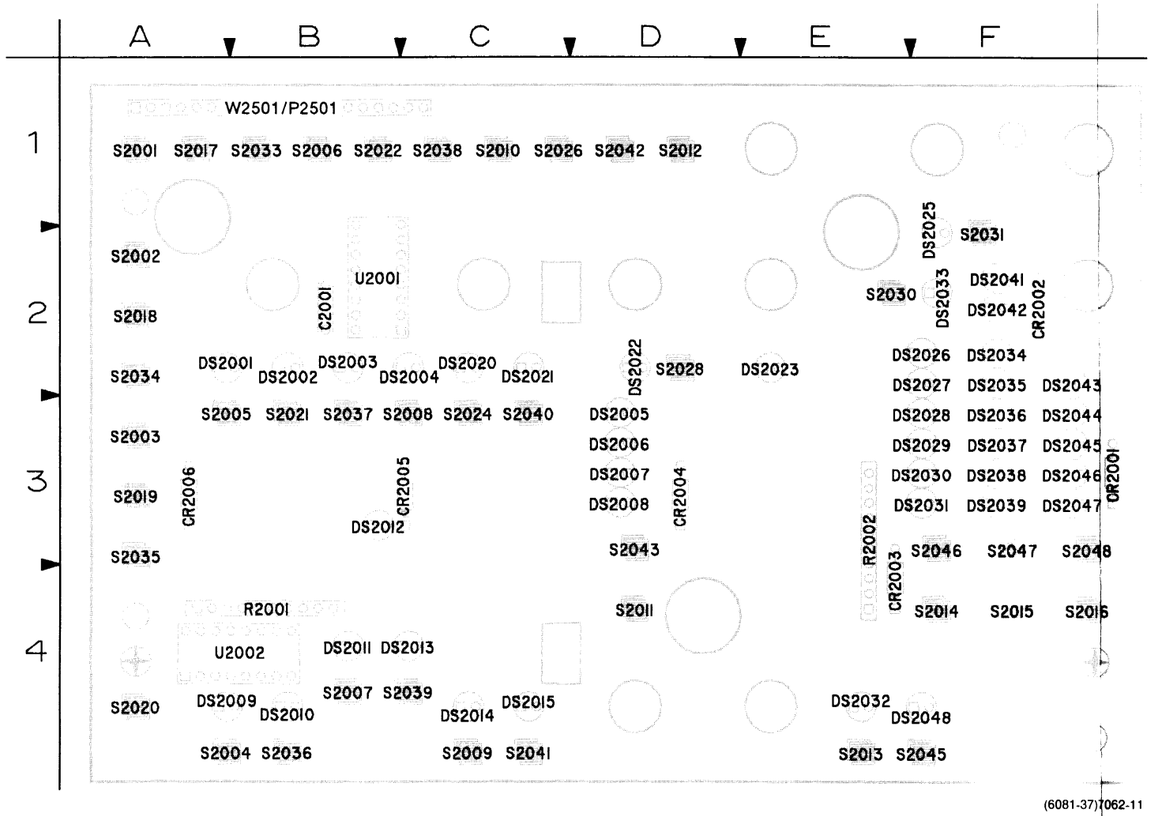

(6081-37)7062-11

Figure 9-11. A14—Switch board.

A14—SWITCH BOARD

CIRCUIT NUMBER	SCHEM NUMBER	CIRCUIT NUMBER	SCHEM NUMBER	CIRCUIT NUMBER	SCHEM NUMBER	CIRCUIT NUMBER	SCHEM NUMBER
C2001	14	DS2023	10			S2030	10
		DS2025	10	R2001	10	S2031	10
CR2001	10	DS2026	10	R2002	10	S2033	10
CR2002	10	DS2027	10			S2034	10
CR2003	10	DS2028	10	S2001	10	S2035	10
CR2004	10	DS2029	10	S2002	10	S2036	10
CR2005	10	DS2030	10	S2003	10	S2037	10
CR2006	10	DS2031	10	S2004	10	S2038	10
		DS2032	10	S2005	10	S2039	10
DS2001	10	DS2033	10	S2006	10	S2040	10
DS2002	10	DS2034	10	S2007	10	S2041	10
DS2003	10	DS2035	10	S2008	10	S2042	10
DS2004	10	DS2036	10	S2009	10	S2043	10
DS2005	10	DS2037	10	S2010	10	S2045	10
DS2006	10	DS2038	10	S2011	10	S2046	10
DS2007	10	DS2039	10	S2013	10	S2047	10
DS2008	10	DS2041	10	S2014	10	S2048	10
DS2009	10	DS2042	10	S2015	10		
DS2010	10	DS2043	10	S2016	10	U2001	10
DS2011	10	DS2044	10	S2017	10	U2001	14
DS2012	10	DS2045	10	S2018	10	U2002	10
DS2013	10	DS2046	10	S2019	10	U2002	14
DS2014	10	DS2047	10	S2020	10		
DS2015	10	DS2048	10	S2021	10	W2501	10
DS2020	10			S2022	10	W2501	14
DS2021	10	P2501	10	S2024	10		
DS2022	10	P2501	14	S2028	10		

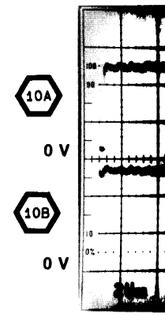

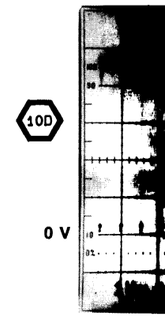

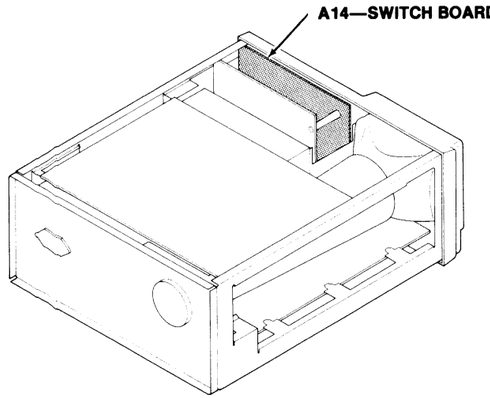

Static Sensitive Devices
See Maintenance Section

COMPONENT NUMBER EXAMPLE

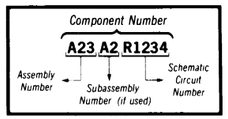

Chassis-mounted components have no Assembly Number prefix—see end of Replaceable Electrical Parts List

F

031
S2041
S2042 CR2002
S2034
S2035 DS2043
S2036 DS2044
S2037 DS2045
S2038 DS2046 CR2001
S2039 DS2047
S2047 S2048
S2015 S2016

(6081-37)7062-11

ve Devices
e Section

EXAMPLE

234
Schematic Circuit Number

Assembly Number
rtical Parts List

A14—SWITCH BOARD

CIRCUIT NUMBER	SCHEM NUMBER	CIRCUIT NUMBER	SCHEM NUMBER	CIRCUIT NUMBER	SCHEM NUMBER	CIRCUIT NUMBER	SCHEM NUMBER
C2001	14	DS2023	10			S2030	10
		DS2025	10	R2001	10	S2031	10
CR2001	10	DS2026	10	R2002	10	S2033	10
CR2002	10	DS2027	10			S2034	10
CR2003	10	DS2028	10	S2001	10	S2035	10
CR2004	10	DS2029	10	S2002	10	S2036	10
CR2005	10	DS2030	10	S2003	10	S2037	10
CR2006	10	DS2031	10	S2004	10	S2038	10
		DS2032	10	S2005	10	S2039	10
DS2001	10	DS2033	10	S2006	10	S2040	10
DS2002	10	DS2034	10	S2007	10	S2041	10
DS2003	10	DS2035	10	S2008	10	S2042	10
DS2004	10	DS2036	10	S2009	10	S2043	10
DS2005	10	DS2037	10	S2010	10	S2045	10
DS2006	10	DS2038	10	S2011	10	S2046	10
DS2007	10	DS2039	10	S2013	10	S2047	10
DS2008	10	DS2041	10	S2014	10	S2048	10
DS2009	10	DS2042	10	S2015	10		
DS2010	10	DS2043	10	S2016	10	U2001	10
DS2011	10	DS2044	10	S2017	10	U2001	14
DS2012	10	DS2045	10	S2018	10	U2002	10
DS2013	10	DS2046	10	S2019	10	U2002	14
DS2014	10	DS2047	10	S2020	10		
DS2015	10	DS2048	10	S2021	10	W2501	10
DS2020	10			S2022	10	W2501	14
DS2021	10	P2501	10	S2024	10		
DS2022	10	P2501	14	S2028	10		

WAVEFORMS FOR DIAGRAM 10

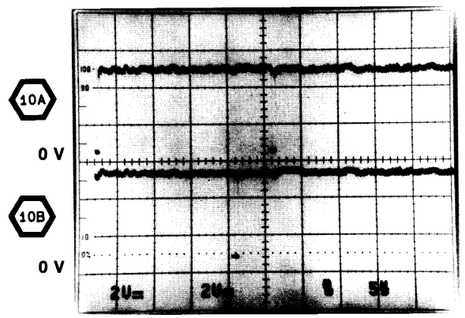

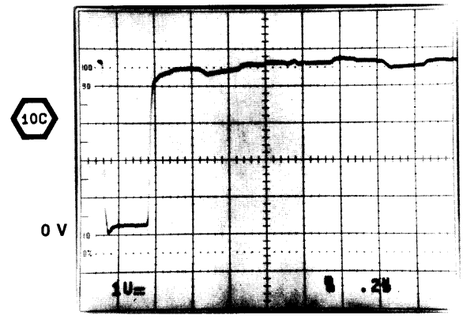

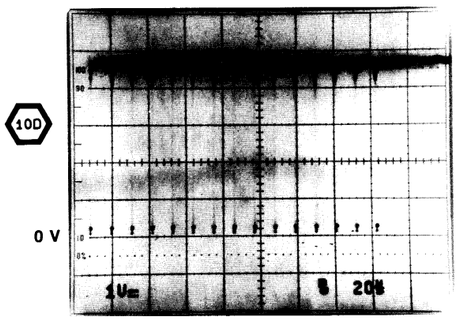

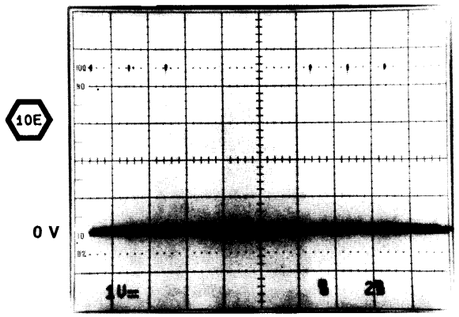

6555-32

SWITCH BOARD AND INTERFACE DIAGRAM 10

ASSEMBLY A14

CIRCUIT NUMBER	SCHEM LOCATION	BOARD LOCATION	CIRCUIT NUMBER	SCHEM LOCATION	BOARD LOCATION	CIRCUIT NUMBER	SCHEM LOCATION	BOARD LOCATION	CIRCUIT NUMBER	SCHEM LOCATION	BOARD LOCATION
CR2001	3G	3F	DS2025	3D	2F	R2001	7L	4B	S2024	6H	3C
CR2002	3G	2F	DS2026	3D	2F	R2002	4L	3E	S2028	4H	2D
CR2003	3H	4E	DS2027	4D	2F				S2030	3H	2E
CR2004	3J	3D	DS2028	5D	3F	S2001	8J	1A	S2031	3H	2F
CR2005	3J	3C	DS2029	5D	3F	S2002	8J	2A	S2033	8G	1B
CR2006	3K	3A	DS2030	6D	3F	S2003	7J	3A	S2034	8G	2A
			DS2031	7D	3F	S2004	7J	4A	S2035	8G	3A
DS2001	3F	2A	DS2032	8E	4E	S2005	7J	3A	S2036	7G	4B
DS2002	3F	2B	DS2033	3D	2F	S2006	6J	1B	S2037	7G	3B
DS2003	4F	2B	DS2034	3D	2F	S2007	6J	4B	S2038	6G	1C
DS2004	3J	2C	DS2035	4D	2F	S2008	6J	3C	S2039	6G	4C
DS2005	6F	3D	DS2036	5D	3F	S2009	5J	4C	S2040	6G	3C
DS2006	6F	3D	DS2037	6D	3F	S2010	5J	1C	S2041	5G	4C
DS2007	7F	3D	DS2038	6D	3F	S2011	4J	4D	S2042	5G	1D
DS2008	8F	3D	DS2039	7D	3F	S2013	4J	4E	S2043	5G	3D
DS2009	3F	4A	DS2041	3C	2F	S2014	3J	4F	S2045	4G	4F
DS2010	3F	4B	DS2042	3C	2F	S2015	3J	4F	S2046	3G	3F
DS2011	4F	4B	DS2043	4C	2F	S2016	3J	4F	S2047	3G	3F
DS2012	5F	3B	DS2044	5C	3F	S2017	8H	1A	S2048	3G	3F
DS2013	6F	4C	DS2045	6C	3F	S2018	8H	2A			
DS2014	6F	4C	DS2046	6C	3F	S2019	7H	3A	U2001	2M	2B
DS2015	7F	4C	DS2047	7C	3F	S2020	7H	4A	U2002	5M	4B
DS2020	5E	2C	DS2048	8C	4F	S2021	7H	3B			
DS2021	6E	2C				S2022	6H	1B	W2501	1M	1B
DS2022	6E	2D	P2501	2F	1B				W2501	2N	1B
DS2023	7E	2E	P2501	3C	1B						

Partial A14 also shown on diagram 14.

ASSEMBLY A16

CIRCUIT NUMBER	SCHEM LOCATION	BOARD LOCATION	CIRCUIT NUMBER	SCHEM LOCATION	BOARD LOCATION	CIRCUIT NUMBER	SCHEM LOCATION	BOARD LOCATION	CIRCUIT NUMBER	SCHEM LOCATION	BOARD LOCATION
C2521	2F	7H	C2549	7B	7J	Q2506	1K	7H	R2547	4C	7J
C2522	1G	7H	C2550	8B	8J				R2548	4C	7J
C2523	1H	7H				R2525	1M	8J	R2549	5B	7J
C2524	1J	7H	J2501	2F	8H	R2528	2A	6H	R2550	6B	7J
C2525	1J	7H	J2501	3C	8H	R2529	4A	6H	R2551	7B	7J
C2526	1K	7G	J2503	1M	7K	R2532	1F	7H	R2552	7B	7K
C2543	3C	7H				R2534	1G	7H	R2553	8B	8J
C2544	4C	7J	Q2501	2G	7J	R2536	1H	7H			
C2545	4C	7J	Q2502	1H	7J	R2538	1H	7H	U2523	1A	7H
C2546	5B	7J	Q2503	1H	7H	R2540	1J	7H	U2524	3A	6J
C2547	6B	7J	Q2504	1J	7H	R2542	1J	7G	U2525	3B	7J
C2548	7B	7J	Q2505	1J	7H	R2546	3B	7J			

Partial A16 also shown on diagrams 8, 9, 11 and 14.

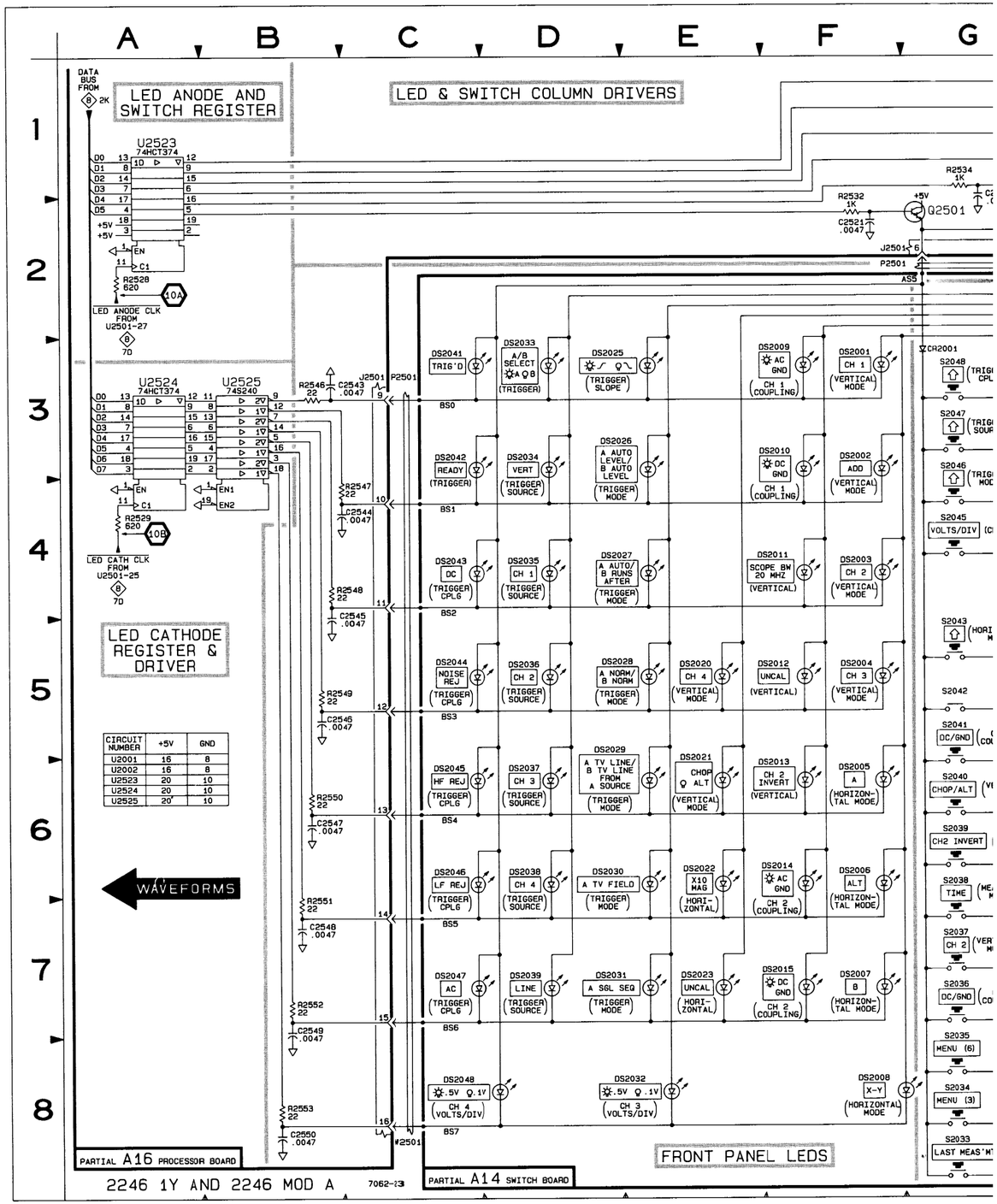

IT ER	SCHEM LOCATION	BOARD LOCATION
4	6H	3C
8	4H	2D
0	3H	2E
1	3H	2F
3	8G	1B
4	8G	2A
5	8G	3A
6	7G	4B
7	7G	3B
8	6G	1C
9	6G	4C
0	6G	3C
1	5G	4C
2	5G	1D
3	5G	3D
5	4G	4F
6	3G	3F
7	3G	3F
8	3G	3F
1	2M	2B
2	5M	4B
01	1M	1B
01	2N	1B

IT ER	SCHEM LOCATION	BOARD LOCATION
7	4C	7J
6	4C	7J
9	5B	7J
0	6B	7J
1	7B	7J
2	7B	7K
3	8B	8J
3	1A	7H
4	3A	6J
5	3B	7J

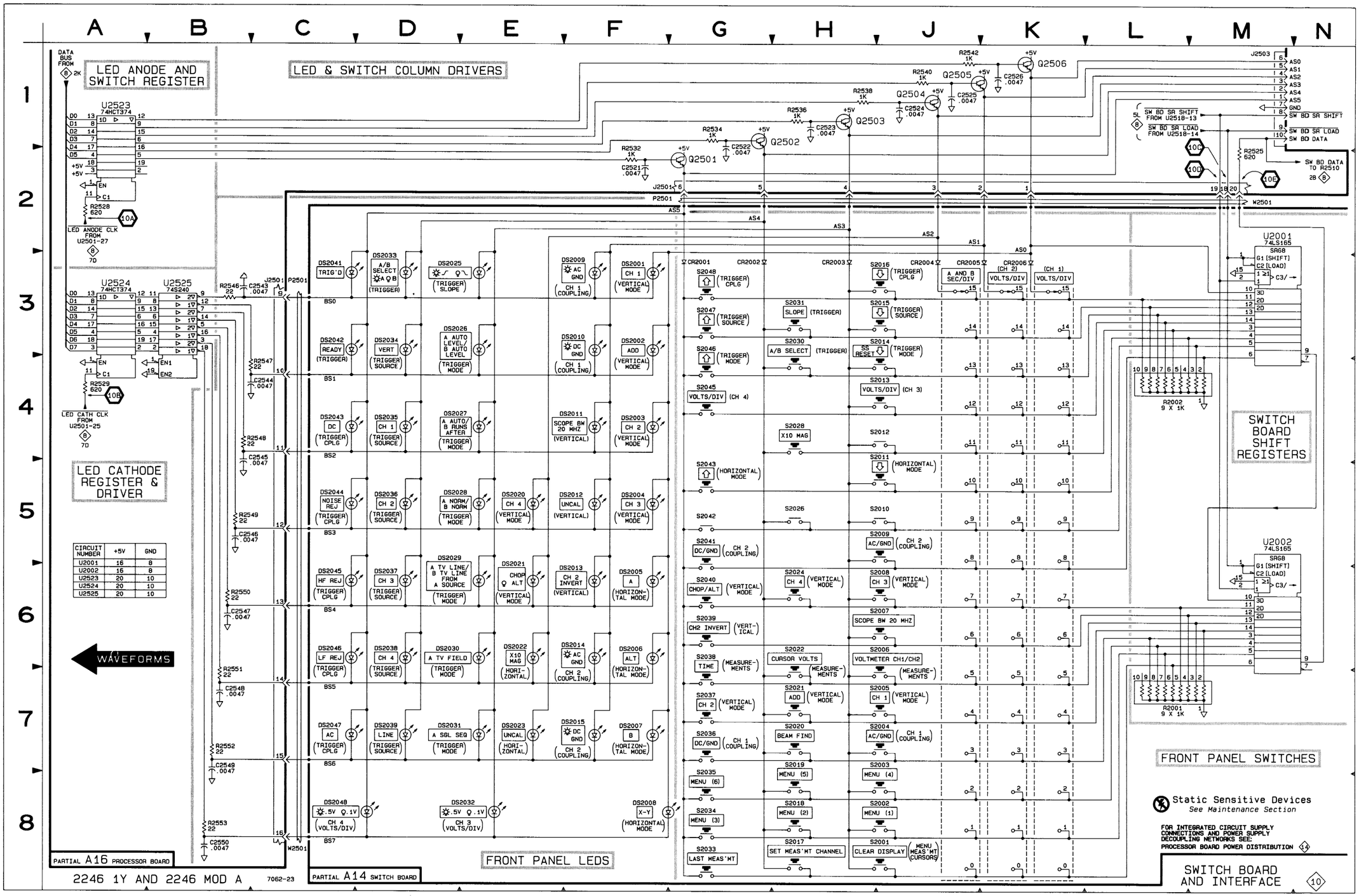

CIRCUIT NUMBER	+5V	GND
U2001	16	8
U2002	16	8
U2523	20	10
U2524	20	10
U2525	20	10

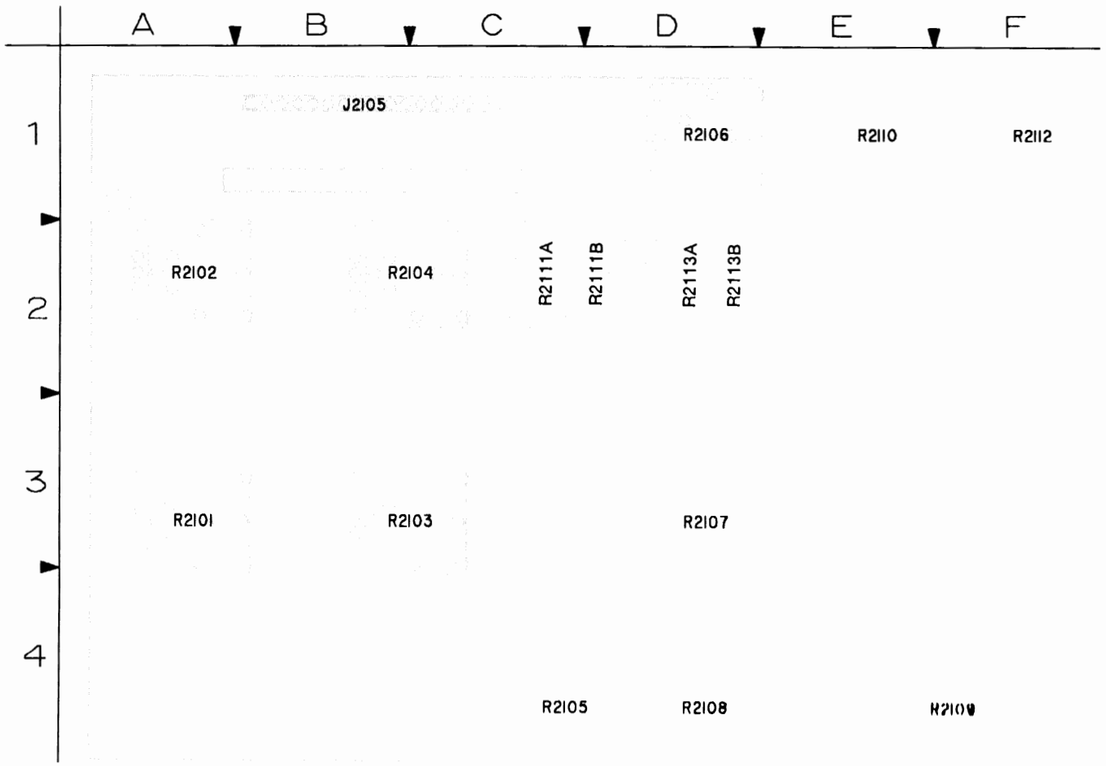

Figure 9-12. A12—Potentiometer board.

Static Sensitive Devices

COMPONENT NUMBER EXAMPLE

Component Number

A23 A2 R1234

Assembly Number

Subassembly Number

Circuit Number

A12—POTENTIOMETER BOARD

CIRCUIT NUMBER	SCHEM NUMBER	CIRCUIT NUMBER	SCHEM NUMBER	CIRCUIT NUMBER	SCHEM NUMBER
J2105	11	R2104	11	R2110	11
J2105	14	R2105	11	R2111	11
		R2106	11	R2112	11
R2101	11	R2107	11	R2113	11
R2102	11	R2108	11		
R2103	11	R2109	11		

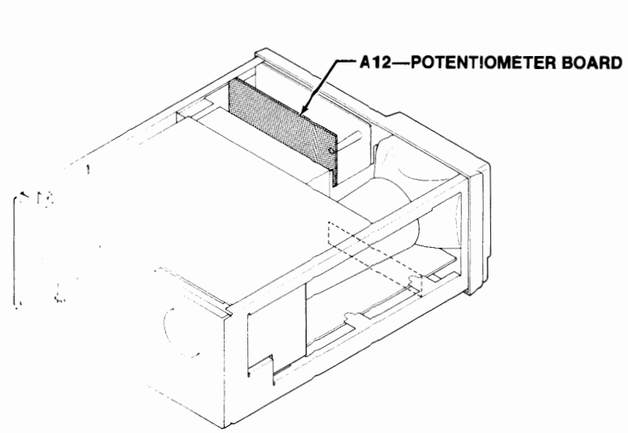

A12—POTENTIOMETER BOARD

CIRCUIT NUMBER	SCHEM NUMBER	CIRCUIT NUMBER	SCHEM NUMBER	CIRCUIT NUMBER	SCHEM NUMBER
J2105	11	R2104	11	R2110	11
J2105	14	R2105	11	R2111	11
		R2106	11	R2112	11
R2101	11	R2107	11	R2113	11
R2102	11	R2108	11		
R2103	11	R2109	11		

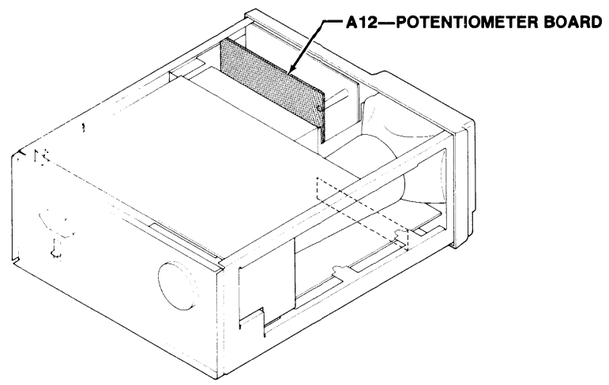

WAVEFORMS FOR DIAGRAM 11

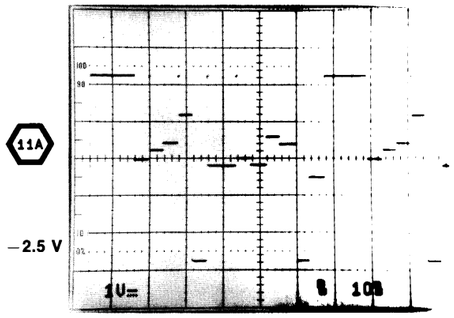

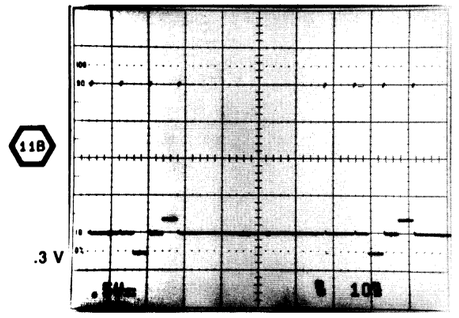

(6555-73)6557-48

ADC, DAC SYSTEM DIAGRAM 11

ASSEMBLY A12

CIRCUIT NUMBER	SCHEM LOCATION	BOARD LOCATION	CIRCUIT NUMBER	SCHEM LOCATION	BOARD LOCATION	CIRCUIT NUMBER	SCHEM LOCATION	BOARD LOCATION	CIRCUIT NUMBER	SCHEM LOCATION	BOARD LOCATION
J2105	4B	1B	R2104	6A	2B	R2108	8A	4D	R2111B	3B	2D
			R2105	7A	4C	R2109	6A	4F	R2112	5A	1F
R2101	6A	3A	R2106	3A	1D	R2110	5A	1E	R2113A	4B	2D
R2102	8A	2A	R2107	4A	3D	R2111A	3A	2C	R2113B	4A	2E
R2103	7A	3B									

Partial A12 also shown on diagram 14.

ASSEMBLY A16

CIRCUIT NUMBER	SCHEM LOCATION	BOARD LOCATION	CIRCUIT NUMBER	SCHEM LOCATION	BOARD LOCATION	CIRCUIT NUMBER	SCHEM LOCATION	BOARD LOCATION	CIRCUIT NUMBER	SCHEM LOCATION	BOARD LOCATION
C2300	3H	7B	R2303	2J	6C	R2332	2H	5A	R2362	6K	7F
C2301	3L	7C	R2304	3L	7A	R2333	2G	5A	R2363	7L	7F
C2302	4L	7B	R2305	4L	7B	R2334	2F	5A	R2364	6K	7F
C2303	3L	7B	R2306	6K	7C	R2335	2F	5A	R2365	7L	8E
C2305	2L	7B	R2307	5K	7C	R2336	2K	7B			
C2306	2M	7B	R2308	5K	7C	R2337	4F	7G	U2300	2D	5B
C2307	3L	7A	R2310	2C	2A	R2338	4F	7G	U2301	1E	5B
C2308	3M	7A	R2311	6F	7F	R2339	4F	7G	U2302	3J	6B
C2309	4L	7A	R2312	6F	7E	R2340	4F	7G	U2303	1K	7A
C2310	4M	7B	R2313	7E	7E	R2341	4F	7G	U2304A	4L	7B
C2318	6K	7C	R2314	7E	7E	R2342	4F	7G	U2304B	2M	7B
C2320	5M	7D	R2315	7F	7E	R2343	5H	7G	U2304C	3L	7B
C2322	5M	7D	R2316	7F	7E	R2344	4H	7G	U2304D	3L	7B
C2323	5L	7D	R2317	7E	7E	R2345	5E	7F	U2305A	5M	7B
C2324	5M	7A	R2318	7E	7E	R2346	5E	7F	U2305B	4M	7B
			R2319	1K	4A	R2347	5E	7F	U2305C	3M	7B
J2302	2M	8B	R2320	1J	3A	R2348	5E	7F	U2305D	2L	7B
J2304	6M	8E	R2321	1J	5A	R2349	5E	7F	U2306	5K	7C
J2601	1C	2A	R2322	1J	5A	R2350	5H	7F	U2308	5J	7G
J2601	1M	2A	R2324	1C	5B	R2351	5H	7F	U2309	6J	7G
			R2325	4E	8G	R2352	6L	7D	U2313	3G	6E
P2105	4B	8G	R2328	2F	6A	R2355	8L	7D	U2314	2J	7B
			R2329	2F	6A	R2356	8L	7D			
R2301	3H	7A	R2330	2G	6A	R2357	8L	7D	W2105	5B	8G
R2302	3H	7A	R2331	2G	6A	R2361	7K	8F			

Partial A16 also shown on diagrams 8, 9, 10 and 14.

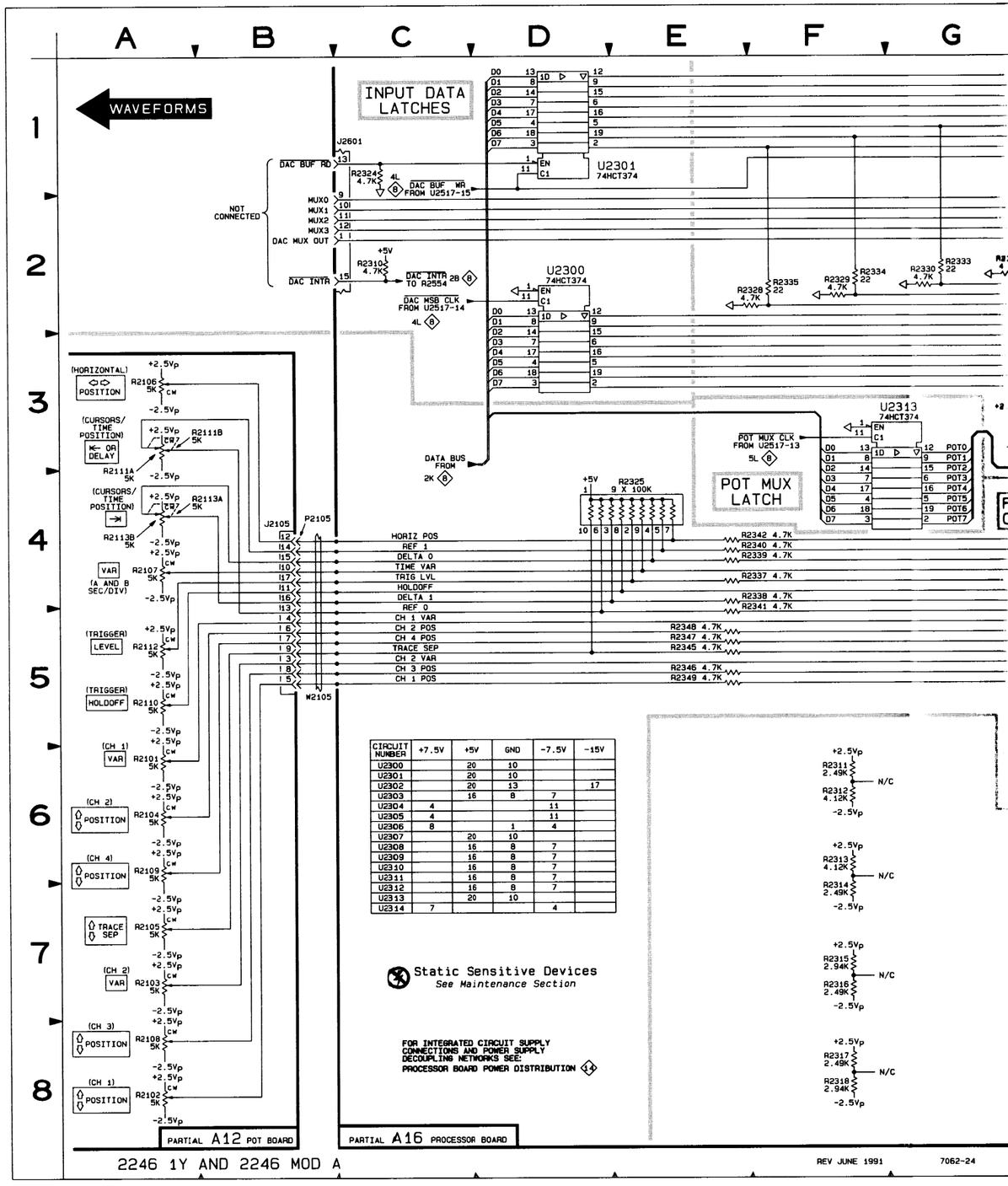

CIRCUIT NUMBER	+7.5V	+5V	GND	-7.5V	-15V
U2300		20	10		
U2301		20	10		
U2302		20	13		17
U2303		16	8	7	
U2304	4			11	
U2305	4			11	
U2306	8		1	4	
U2307		20	10		
U2308		16	8	7	
U2309		16	8	7	
U2310		16	8	7	
U2311		16	8	7	
U2312		16	8	7	
U2313		20	10		
U2314	7			4	

SCHEM LOCATION	BOARD LOCATION
3B	2D
5A	1F
4B	2D
4A	2E

SCHEM LOCATION	BOARD LOCATION
6K	7F
7L	7F
6K	7F
7L	8E
2D	5B
1E	5B
3J	6B
1K	7A
4L	7B
2M	7B
3L	7B
3L	7B
5M	7B
4M	7B
3M	7B
2L	7B
5K	7C
5J	7G
6J	7G
3G	6E
2J	7B
5B	8G

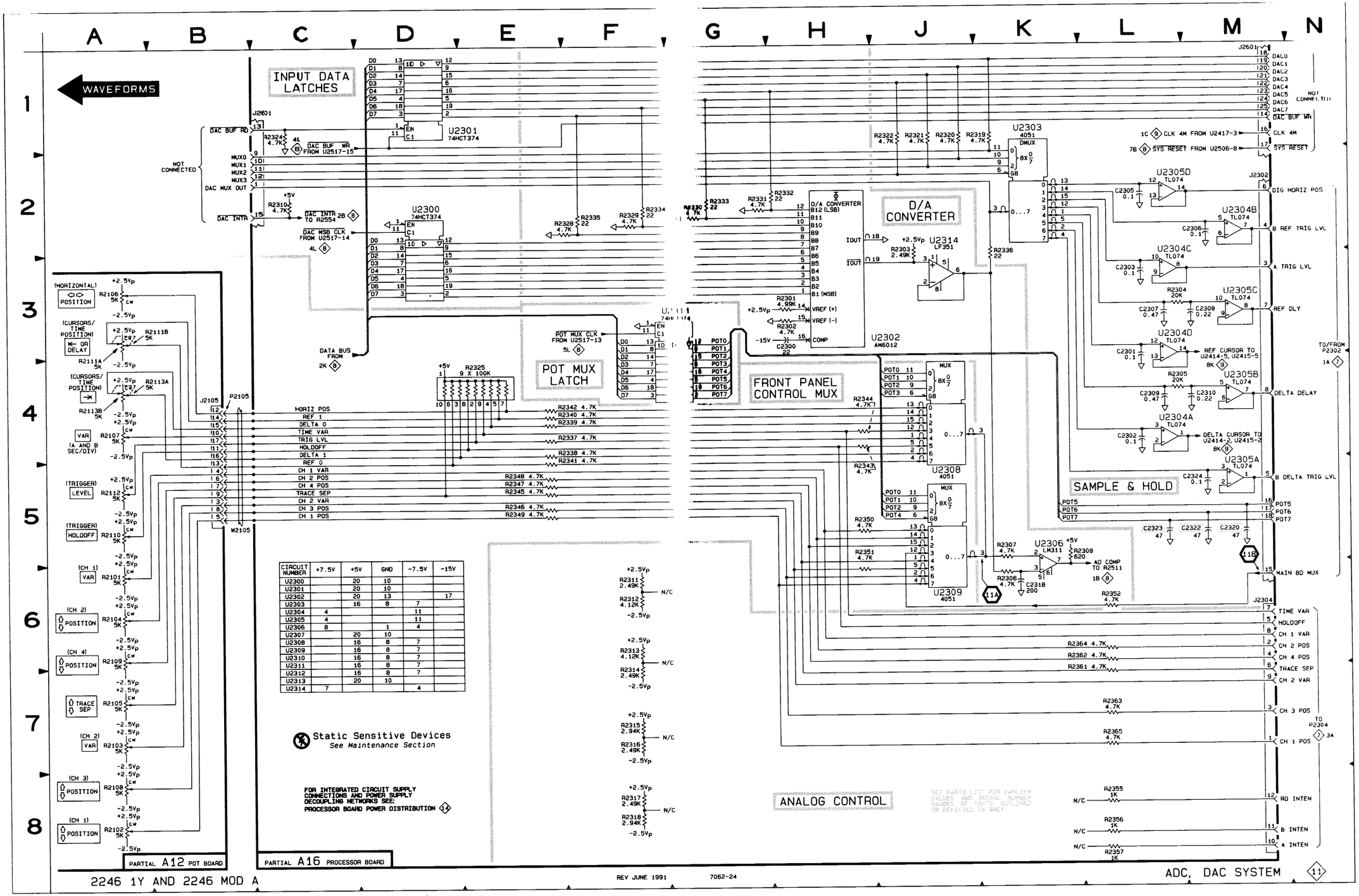

CIRCUIT NUMBER	+7.5V	+5V	GND	-7.5V	-15V
U2300		20	10		
U2301		20	10		
U2302		20	13		17
U2303		16	8	7	
U2304	4			11	
U2305	4			11	
U2306	8		1	4	
U2307		20	10		
U2308		16	8	7	
U2309		16	8	7	
U2310		16	8	7	
U2311		16	8	7	
U2312		16	8	7	
U2313		20	10		
U2314	7			4	

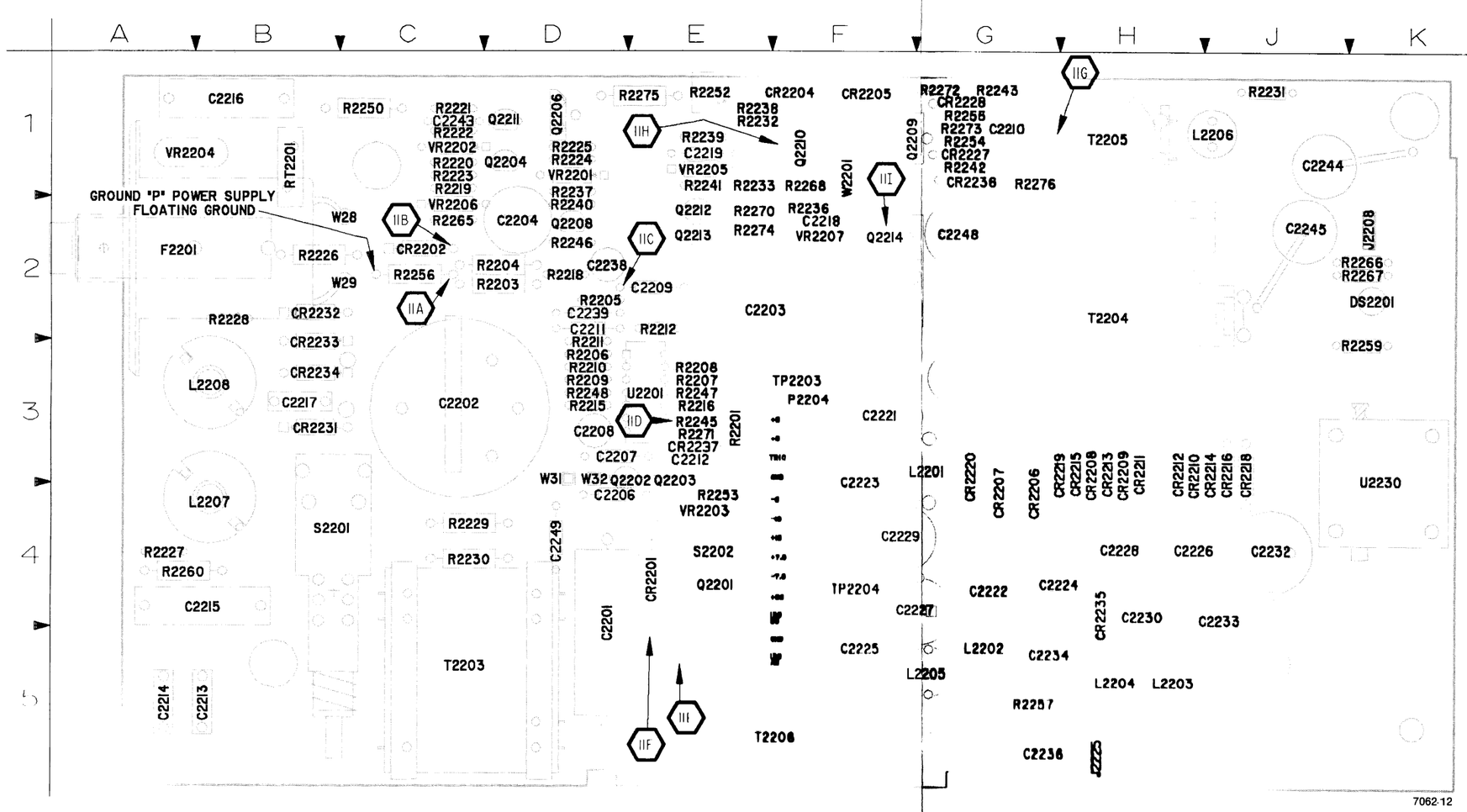

7062-12

Figure 9-13. A18– Power Supply board.

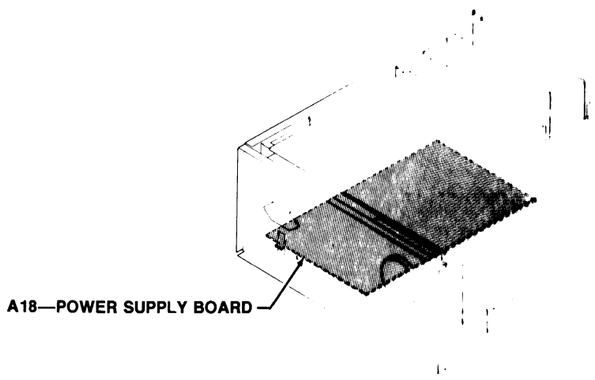

Static Sensitive Devices
See Maintenance Section

COMPONENT NUMBER EXAMPLE

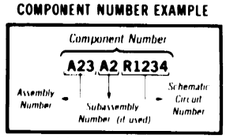

Chassis mounted components have no Assembly Number prefix – see end of Replaceable Electrical Parts List

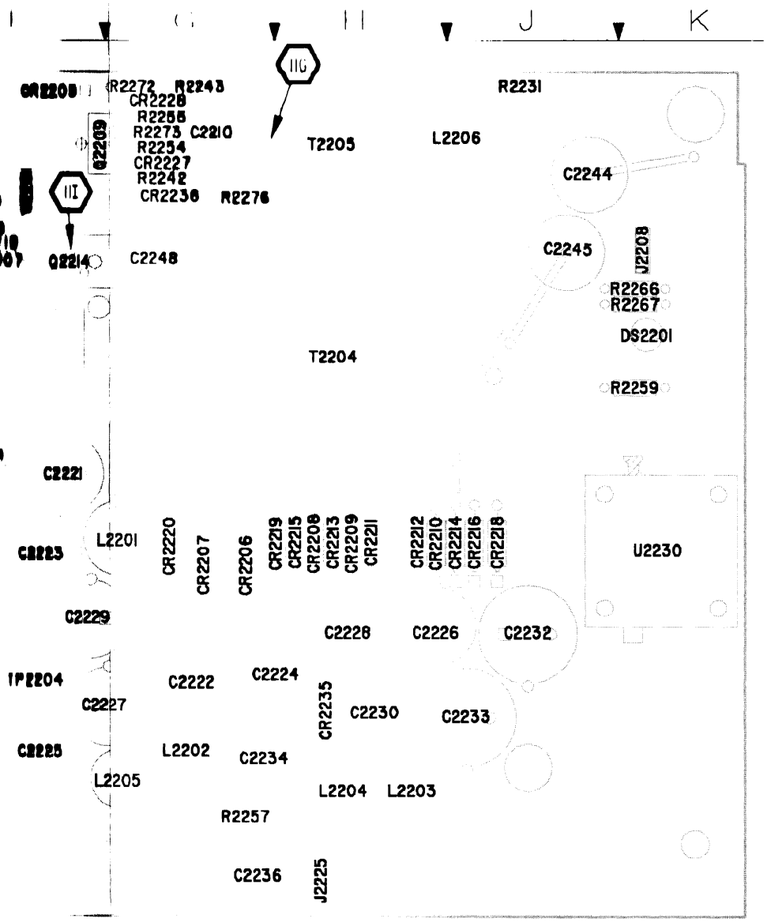

7062-12

Supply board.

A18—POWER SUPPLY BOARD

CIRCUIT NUMBER	SCHEM NUMBER	CIRCUIT NUMBER	SCHEM NUMBER	CIRCUIT NUMBER	SCHEM NUMBER	CIRCUIT NUMBER	SCHEM NUMBER
C2201	12	CR2209	12	Q2211	12	R2252	12
C2202	12	CR2210	12	Q2212	12	R2253	12
C2203	12	CR2211	12	Q2213	12	R2254	12
C2204	12	CR2212	12	Q2214	12	R2255	12
C2206	12	CR2213	12			R2256	12
C2207	12	CR2214	12	R2201	12	R2257	12
C2208	12	CR2215	12	R2203	12	R2259	12
C2209	12	CR2216	12	R2204	12	R2260	12
C2210	12	CR2218	12	R2205	12	R2265	12
C2211	12	CR2219	12	R2206	12	R2266	12
C2212	12	CR2220	12	R2207	12	R2267	12
C2213	12	CR2227	12	R2208	12	R2268	12
C2214	12	CR2228	12	R2209	12	R2270	12
C2215	12	CR2231	12	R2210	12	R2271	12
C2216	12	CR2232	12	R2211	12	R2272	12
C2217	12	CR2233	12	R2212	12	R2273	12
C2218	12	CR2234	12	R2215	12	R2274	12
C2219	12	CR2235	12	R2216	12	R2275	12
C2221	12	CR2236	12	R2218	12	R2276	12
C2222	12	CR2237	12	R2219	12		
C2223	12			R2220	12	RT2201	12
C2224	12	DS2201	12	R2221	12		
C2225	12			R2222	12	S2201	12
C2226	12	F2201	12	R2223	12	S2202	12
C2227	12			R2224	12		
C2228	12	J2208	12	R2225	12	T2203	12
C2229	12	J2225	12	R2226	12	T2204	12
C2230	12			R2227	12	T2205	12
C2232	12	L2201	12	R2228	12	T2206	12
C2233	12	L2202	12	R2229	12		
C2234	12	L2203	12	R2230	12	U2201	12
C2236	12	L2204	12	R2231	12	U2230	12
C2238	12	L2205	12	R2232	12		
C2239	12	L2206	12	R2233	12	VR2201	12
C2243	12	L2207	12	R2236	12	VR2202	12
C2244	12	L2208	12	R2237	12	VR2203	12
C2245	12			R2238	12	VR2204	12
C2248	12	P2204	12	R2239	12	VR2205	12
C2249	12			R2240	12	VR2206	12
		Q2201	12	R2241	12	VR2207	12
CR2201	12	Q2202	12	R2242	12		
CR2202	12	Q2203	12	R2243	12	W28	12
CR2204	12	Q2204	12	R2245	12	W29	12
CR2205	12	Q2206	12	R2246	12	W31	12
CR2206	12	Q2208	12	R2247	12	W32	12
CR2207	12	Q2209	12	R2248	12	W2201	12
CR2208	12	Q2210	12	R2250	12		

WAVEFORMS FOR DIAGRAM 12

12A

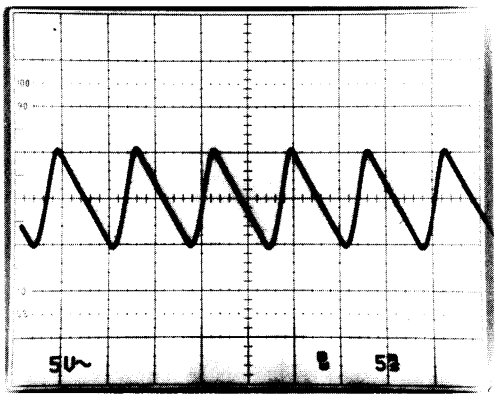

−2.5 V

12B

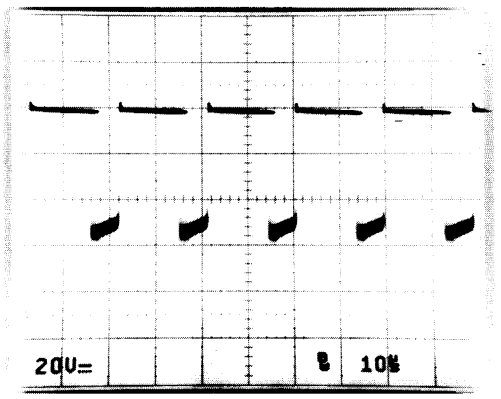

12C

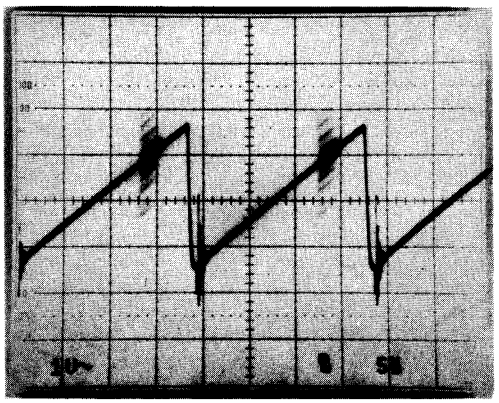

12D

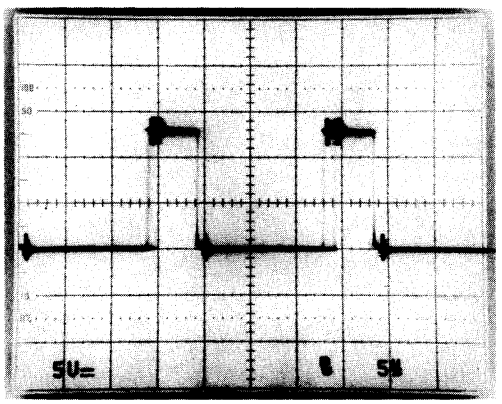

12E

0 V

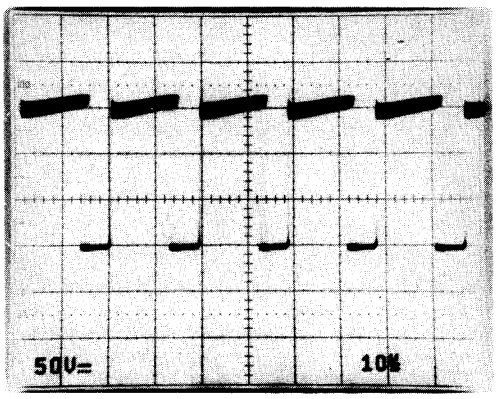

12F

0 V

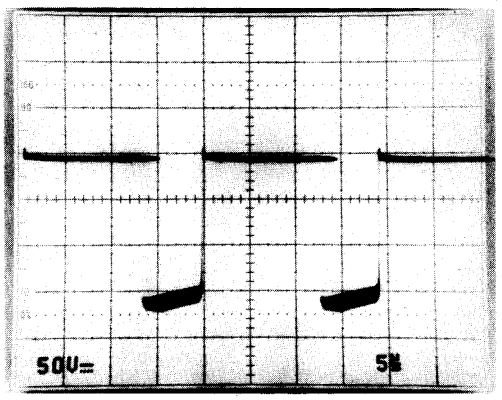

(6555-47)6557-87

MORE

WAVEFORMS FOR DIAGRAM 12 (cont)

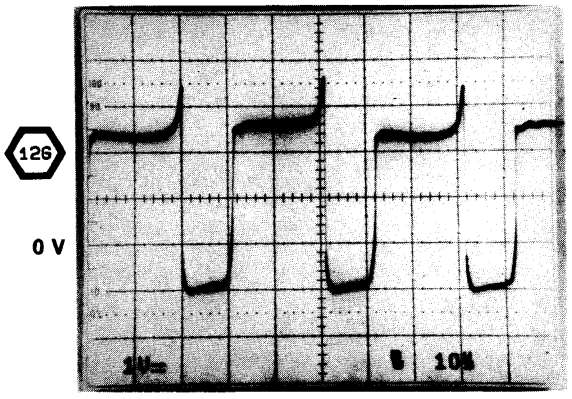

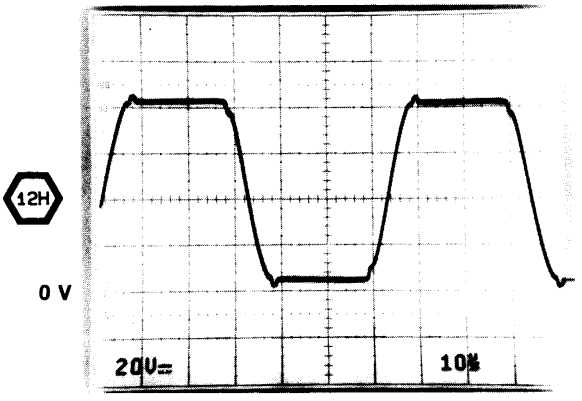

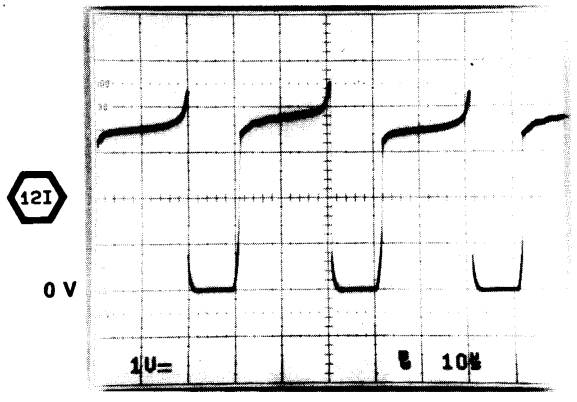

(6555-46)6557-86

POWER SUPPLY DIAGRAM 12

ASSEMBLY A18

CIRCUIT NUMBER	SCHEM LOCATION	BOARD LOCATION	CIRCUIT NUMBER	SCHEM LOCATION	BOARD LOCATION	CIRCUIT NUMBER	SCHEM LOCATION	BOARD LOCATION	CIRCUIT NUMBER	SCHEM LOCATION	BOARD LOCATION
C2201	3H	4D	CR2209	5L	3H	Q2211	2E	1D	R2252	6H	1E
C2202	2D	3C	CR2210	5L	3H	Q2212	6G	2E	R2253	4G	4E
C2203	5H	2E	CR2211	5L	3H	Q2213	6H	2E	R2254	7J	1G
C2204	3D	2D	CR2212	4L	3H	Q2214	8J	2F	R2255	6K	1G
C2206	4G	4D	CR2213	4L	3H				R2256	2D	2C
C2207	3E	3D	CR2214	4L	3J	R2201	5H	3E	R2257	6M	5G
C2208	3E	3D	CR2215	4M	3H	R2203	2D	2D	R2259	8M	3K
C2209	4E	2E	CR2216	4M	3J	R2204	2D	2D	R2260	1B	4A
C2210	6K	1G	CR2218	3M	3J	R2205	6E	2D	R2265	2D	2C
C2211	4E	2D	CR2219	3L	3H	R2206	4D	3D	R2266	8M	2K
C2212	4G	3E	CR2220	3L	3G	R2207	5D	3E	R2267	8M	2K
C2213	2B	5B	CR2227	7J	1G	R2208	5E	3E	R2268	6J	1F
C2214	1B	5A	CR2228	7K	1G	R2209	5E	3D	R2270	8G	2E
C2215	2B	4B	CR2231	2C	3B	R2210	4E	3D	R2271	4F	3E
C2216	2B	1B	CR2232	1C	2B	R2211	4E	3D	R2272	7K	1G
C2217	2C	3B	CR2233	1C	3B	R2212	4D	2E	R2273	6J	1G
C2218	8H	2F	CR2234	2C	3B	R2215	4E	3D	R2274	6G	2E
C2219	6J	1E	CR2235	4L	4H	R2216	4F	3E	R2275	5E	1E
C2221	2M	3F	CR2236	6J	1G	R2218	3E	2D	R2276	6J	1G
C2222	2M	4G	CR2237	4G	3E	R2219	3D	1C			
C2223	3M	3F				R2220	3E	1C	RT2201	1A	1B
C2224	3M	4G	DS2201	8M	2K	R2221	2E	1C			
C2225	5M	5F				R2222	2E	1C	S2201	1C	4B
C2226	5M	4H	F2201	2A	2A	R2223	3D	1C	S2202	2E	4E
C2227	5M	4F				R2224	6F	1D			
C2228	5M	4H	J2208	7M	2K	R2225	6F	1D	T2203	2H	5C
C2229	4M	4F	J2225	6M	5H	R2226	2A	2B	T2204	2K	2H
C2230	4M	4H				R2227	1B	4A	T2205	6K	1H
C2232	3M	4J	L2201	2M	3G	R2228	2B	2B	T2206	1C	5E
C2233	4M	4J	L2202	3M	5G	R2229	1C	4C			
C2234	5L	5G	L2203	5M	5H	R2230	1C	4C	U2201	5F	3E
C2236	6M	5G	L2204	4M	5H	R2231	7M	1J	U2230	7L	3K
C2238	6E	2D	L2205	4M	5G	R2232	6J	1E			
C2239	4E	2D	L2206	6K	1J	R2233	6G	1E	VR2201	5F	1D
C2243	2E	1C	L2207	1B	4B	R2236	8G	2F	VR2202	3E	1C
C2244	7M	1J	L2208	2B	3B	R2237	6E	1D	VR2203	4H	4E
C2245	7L	2J				R2238	6H	1E	VR2204	2A	1A
C2248	6J	2G	P2204	1M	3F	R2239	5H	1E	VR2205	5G	1E
C2249	4G	4D				R2240	6E	2D	VR2206	3D	2C
			Q2201	4H	4E	R2241	5H	1E	VR2207	8J	2F
CR2201	4H	4E	Q2202	3G	3E	R2242	7J	1G			
CR2202	2G	2C	Q2203	4G	4E	R2243	7K	1G	W28	2A	2B
CR2204	6J	1F	Q2204	3E	1D	R2245	4F	3E	W29	1A	2B
CR2205	6J	1F	Q2206	6F	1D	R2246	6E	2D	W31	2E	3D
CR2206	2L	4G	Q2208	6E	2D	R2247	5D	3E	W32	3E	3D
CR2207	2L	4G	Q2209	7J	1F	R2248	3E	3D	W2201	7J	1F
CR2208	6L	3H	Q2210	7K	1F	R2250	1A	1C			

OTHER PARTS

CIRCUIT NUMBER	SCHEM LOCATION	BOARD LOCATION	CIRCUIT NUMBER	SCHEM LOCATION	BOARD LOCATION	CIRCUIT NUMBER	SCHEM LOCATION	BOARD LOCATION	CIRCUIT NUMBER	SCHEM LOCATION	BOARD LOCATION
B25	6N	CHASSIS	FL2201	2A	CHASSIS	J2726	6M	CHASSIS	P25	6N	CHASSIS

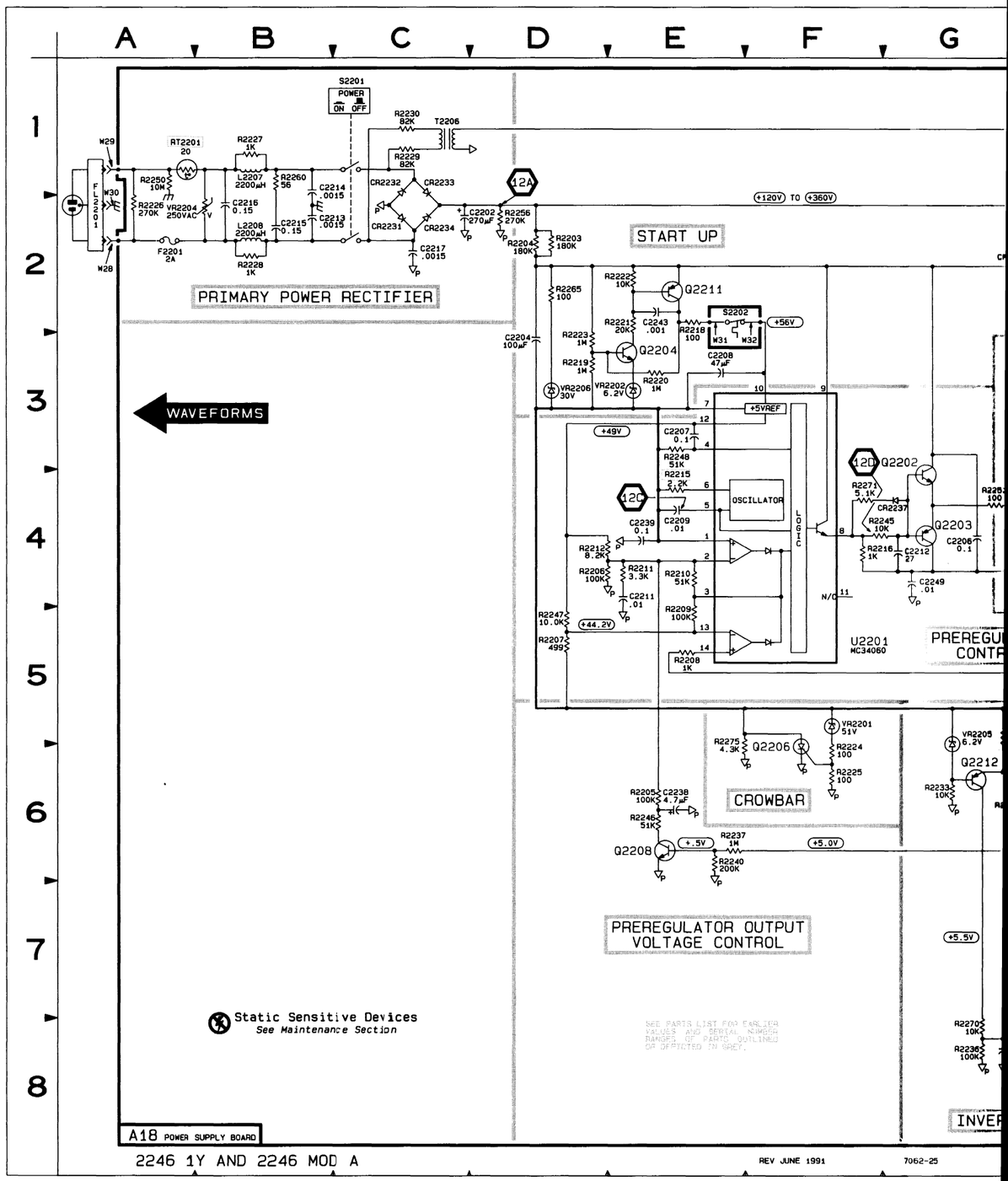

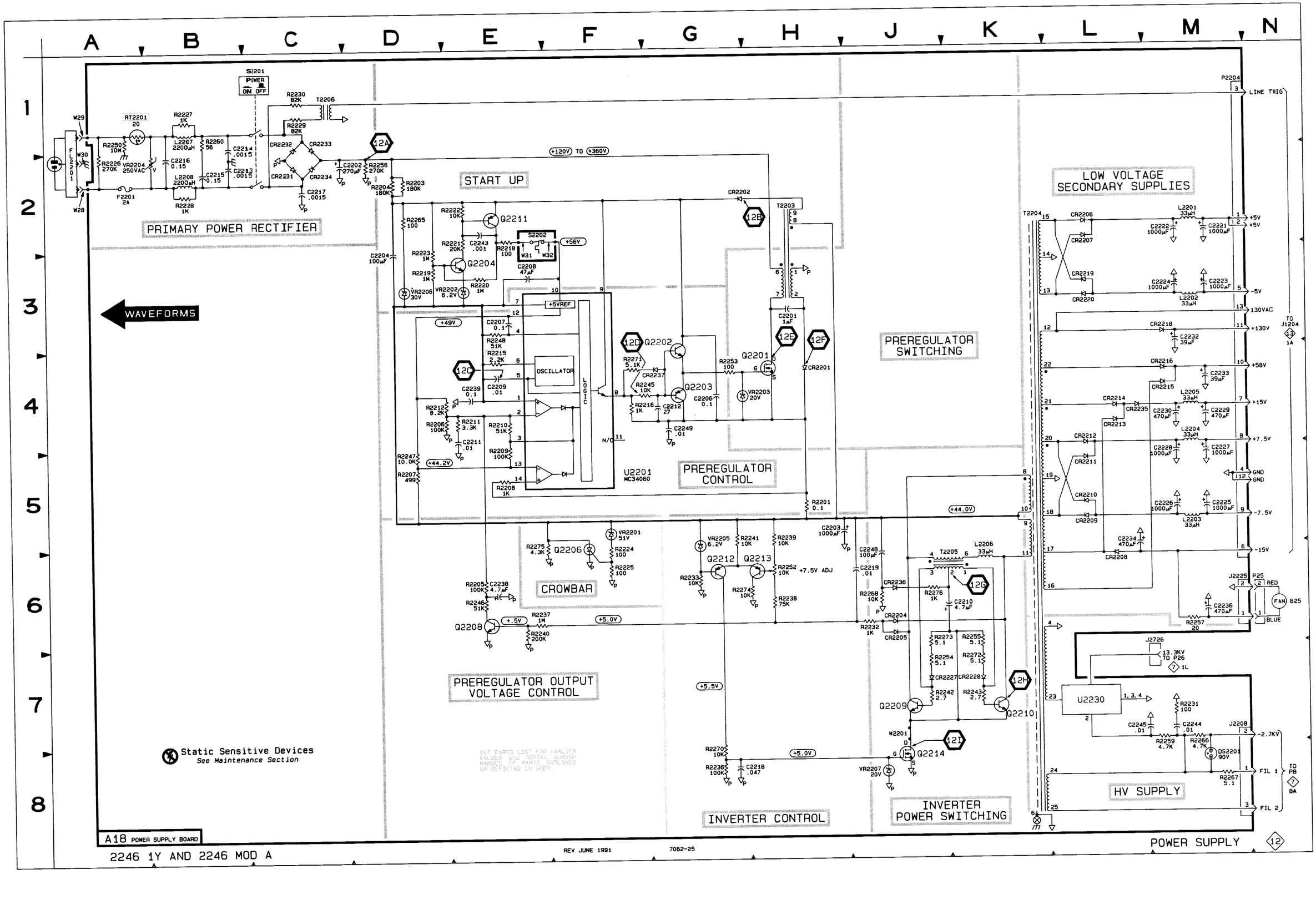

PRIMARY POWER RECTIFIER
START UP
LOW VOLTAGE SECONDARY SUPPLIES
WAVEFORMS
PREREGULATOR SWITCHING
PREREGULATOR CONTROL
CROWBAR
PREREGULATOR OUTPUT VOLTAGE CONTROL
INVERTER CONTROL
INVERTER POWER SWITCHING
HV SUPPLY
Static Sensitive Devices
See Maintenance Section
A18 POWER SUPPLY BOARD
2246 1Y AND 2246 MOD A
REV JUNE 1991
7062-25
POWER SUPPLY

MAIN BOARD POWER DISTRIBUTION DIAGRAM 13
(SN B710100 AND ABOVE, 2246 1Y
SN B110100 AND ABOVE, 2246 MOD A)

ASSEMBLY A8

CIRCUIT NUMBER	SCHEM LOCATION	BOARD LOCATION	CIRCUIT NUMBER	SCHEM LOCATION	BOARD LOCATION	CIRCUIT NUMBER	SCHEM LOCATION	BOARD LOCATION	CIRCUIT NUMBER	SCHEM LOCATION	BOARD LOCATION
W900	5M	1E									

Partial A8 also shown on diagram 7.

ASSEMBLY A10

C135	7D	2B	C613	1H	1N	R390	1L	8F	U600	2G	2M
C136	8E	2B	C701	3J	10J	R392	8F	7C	U601	2H	1N
C140	8D	2C	C702	3K	9J	R480	2B	4F	U602	1E	3K
C155	7E	2B	C703	3K	10K	R481	2D	1J	U603	2G	2K
C156	8E	1B	C704	3L	9K	R504	1M	9C	U604	2H	2L
C171	5A	2B	C705	4A	9G	R701	3J	9J	U606	3F	3M
C172	1A	3C	C708	3J	9J	R709	2K	9J	U701	3K	10J
C180	8D	3D	C801	4A	8K	R723	5H	9J	U702	3K	9K
C181	7A	6D	C806	5H	8H	R733	3K	10K	U801	5H	7H
C205	3J	10H	C815	6H	7H	R734	4B	9H	U802	6H	8H
C206	3J	10H	C816	7H	8H	R837	7H	9K	U901A	5K	9A
C214	7B	4E	C818	4B	8J	R915	5L	9A	U901B	5L	9A
C215	7B	5D	C821	5H	7J	R916	5L	9A	U901	5J	9A
C216	2B	5G	C822	6E	8J	R1026	8F	7M	U930	5J	8B
C217	1B	5G	C901	5K	9B	R1027	6F	8L	U931	3M	9B
C219	7B	5D	C902	5K	8A	R1101*	6H	3J	U932	5K	8A
C224	7B	3D	C903	5M	8A	R1102*	8G	4J	U1001	7F	7L
C225	7B	3D	C904	5M	9B	R1108*	7J	4G	U1101	7H	4G
C229	7B	4D	C1005	7F	7M	R1158	1F	4L	U1102	7H	4G
C234	7C	2D	C1006	6G	8L	R1159	2G	5J	U1103	2F	5K
C235	7C	2D	C1101	6H	3H	R1160	6K	5J	U1104	2C	4H
C239	7C	2D	C1102	8G	4G	R1260*	7E	5E	U1106	2G	5L
C244	7D	1D	C1104	2C	4H	R2783	4D	7N			
C245	7C	1D	C1108*	7J	4G				W103	1G	3D
C249	7D	2D	C1158	1F	5L	U112	7D	6C	W235*	7E	5E
C265	5B	5F	C1159	2G	5L	U122	7D	4C	W501	1H	1M
C282	3B	4F	C1160	6K	5K	U171	5A	3B	W606	1E	1K
C283	6B	6G	C2701	6H	7M	U172	6A	3B	W607	2E	5M
C297	3C	5F	C2702	8G	6L	U173	1A	3C	W900	5M	9B
C298	3B	3F	C2709	4E	7M	U201	1B	5H	W1104*	6H	3J
C304	5D	7D				U202	1B	5G	W1105*	8H	4J
C309	2J	7H	J1204	1A	5J	U203	3J	10G	W1200	1J	6F
C316	5C	8E				U210	7B	5E	W1201	3M	9C
C317	1L	8E	L101	5A	2C	U220	7B	4E	W1202	2J	9H
C318	8J	9E	L102	8D	2C	U230	7C	3E	W1203	1G	1J
C320	1J	8G	L201	6A	6E	U240	7C	2E	W1204	1J	7G
C322	2M	9D	L216	2B	4H	U260	5B	5F	W1205	2G	2J
C337	5D	9E	L217	1B	5H	U301	1L	9D	W1209	1E	4J
C338	8A	8G	L445	1B	3J	U302	5E	8C	W1210	3G	2J
C339	8B	9G	L475	1D	1J	U303	5E	9C	W1216	3M	8C
C351	5F	8C				U304	5F	8D	W1217	3G	6H
C442	3G	2H	P2302	8M	10D	U307	5E	7D	W1218	3G	5H
C445	1B	3F	P2502	1N	1L	U308	5E	7D	W1221	3E	1J
C475	1D	1F				U309	5F	7C	W1222	8B	6D
C480	2D	1J	R182	8D	6D	U310	5E	10D	W1223	3L	6D
C481	2C	3F	R208	3J	10H	U311	5E	10D	W1231	6F	8K
C482	2D	2F	R226	7B	6E	U315	1J	8F	W1237	8F	6L
C501	3E	4M	R245	7C	3D	U316	2J	7H	W1247	5C	6D
C502	3E	4N	R282	3B	3F	U421	2B	3F	W1248	5H	6H
C503	3E	4N	R283	6B	6G	U431	2D	2F	W1249	5H	5H
C505	2M	9C	R297	3C	6F	U441	1D	1H	W1250	5H	8K
C604	3F	3M	R298	3B	3F	U442	3G	2H	W1251	8A	6H
C605	1H	2M	R312	5D	7D	U501	3E	5M	W1252	8A	5H
C606	1E	3L	R339	8J	9E	U502	3E	4N	W1255	5B	6F
C609	2H	2J	R345	5C	8E	U503	3E	5N	W1277	4D	8K
C610	2H	2L	R374	5D	10E	U506	2M	10C	W2302	8M	10D
									W2502	1M	1L

Partial A10 also shown on diagrams 1, 2, 3, 4, 5, 6 and 7.

***See Parts List for serial number ranges.**

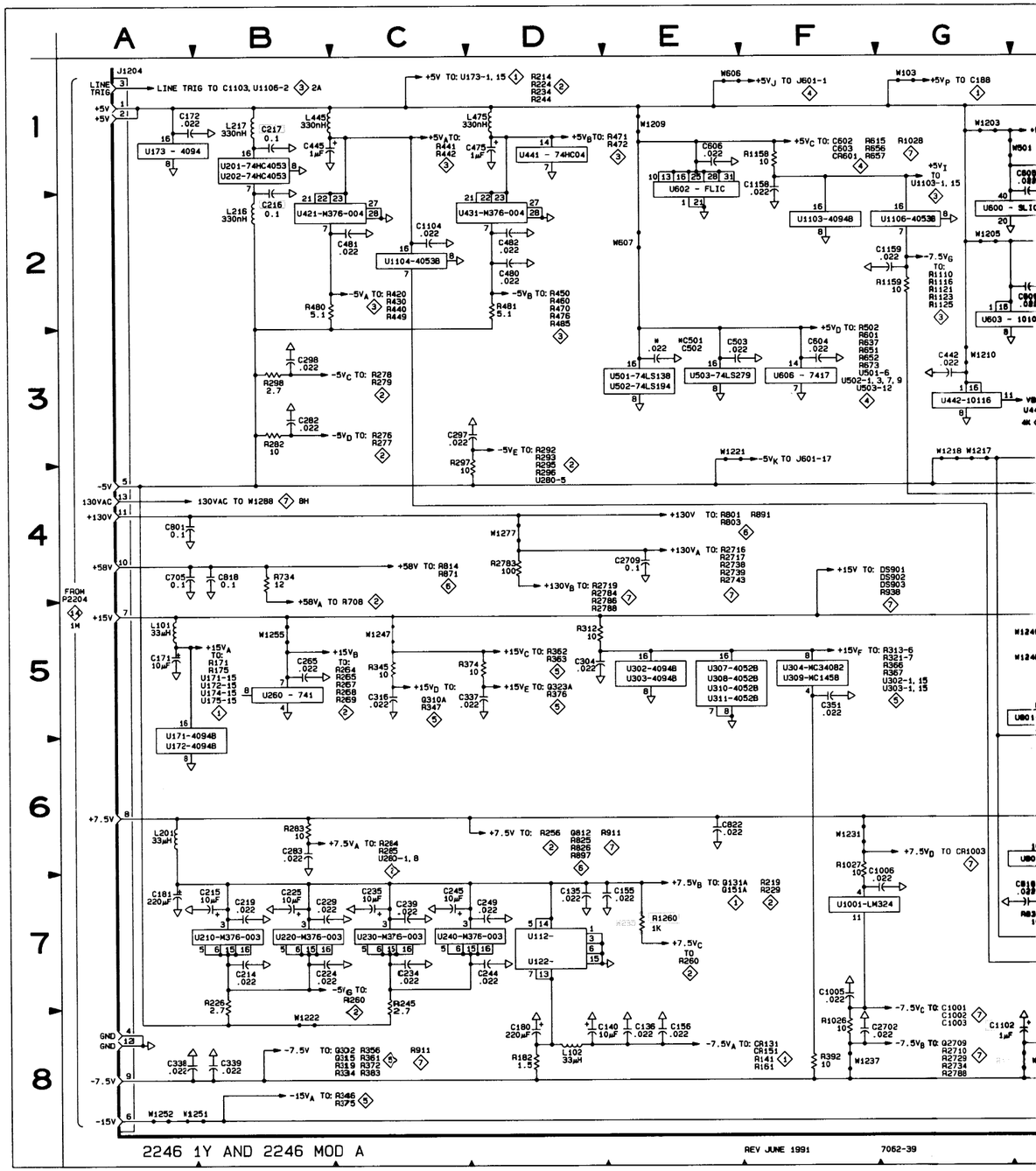

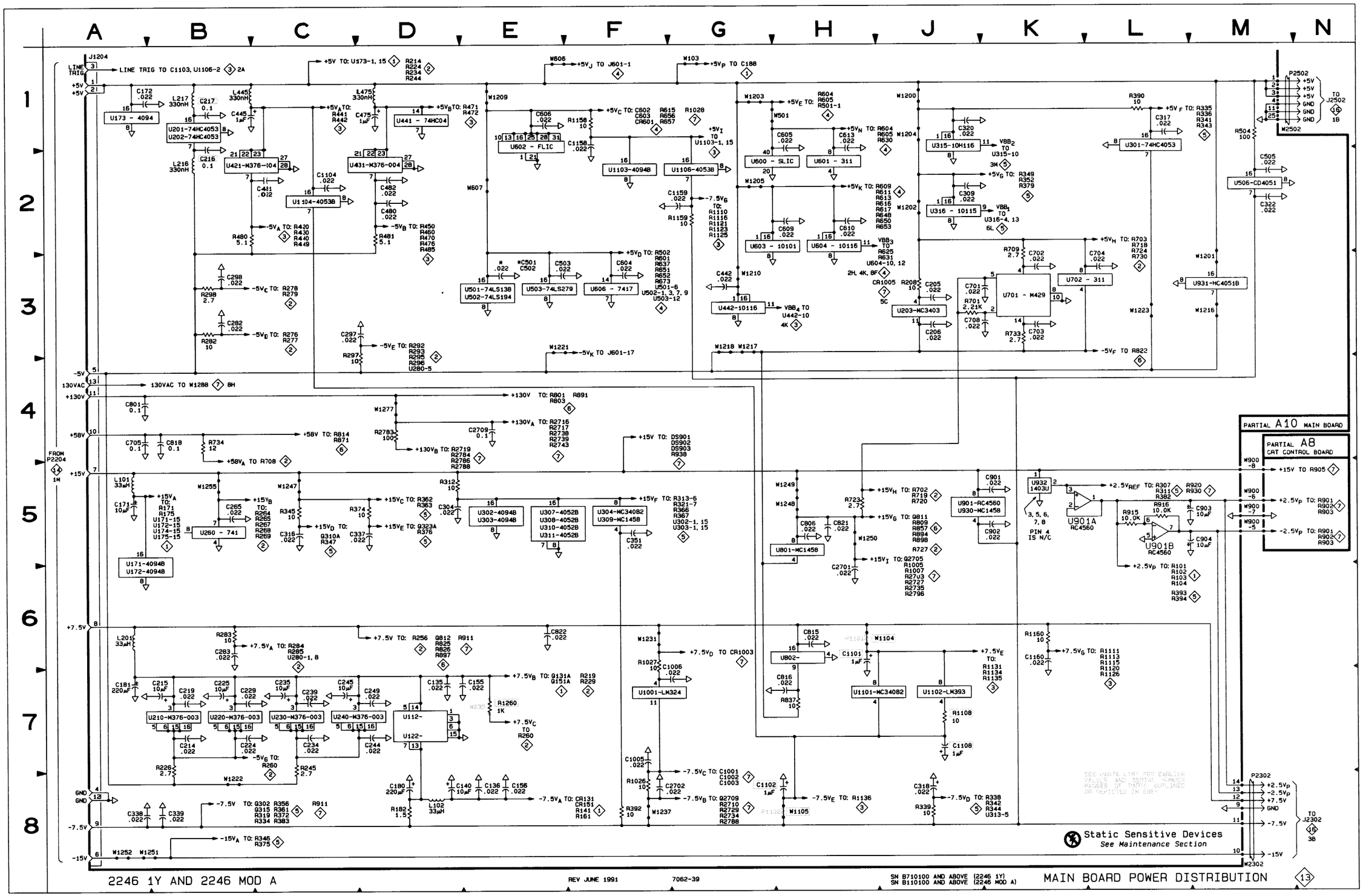
PARTIAL A10 MAIN BOARD
PARTIAL A8 CRT CONTROL BOARD
Static Sensitive Devices
See Maintenance Section
2246 1Y AND 2246 MOD A
REV JUNE 1991
7062-39
SN B710100 AND ABOVE (2246 1Y)
SN B110100 AND ABOVE (2246 MOD A)
MAIN BOARD POWER DISTRIBUTION

MAIN BOARD POWER DISTRIBUTION DIAGRAM 13
(SN B710099 AND BELOW, 2246 1Y
SN B110099 AND BELOW, 2246 MOD A)

ASSEMBLY A8

CIRCUIT NUMBER	SCHEM LOCATION	BOARD LOCATION	CIRCUIT NUMBER	SCHEM LOCATION	BOARD LOCATION	CIRCUIT NUMBER	SCHEM LOCATION	BOARD LOCATION	CIRCUIT NUMBER	SCHEM LOCATION	BOARD LOCATION
W900	5M	1E									

Partial A8 also shown on diagram 7.

ASSEMBLY A10

CIRCUIT NUMBER	SCHEM LOCATION	BOARD LOCATION	CIRCUIT NUMBER	SCHEM LOCATION	BOARD LOCATION	CIRCUIT NUMBER	SCHEM LOCATION	BOARD LOCATION	CIRCUIT NUMBER	SCHEM LOCATION	BOARD LOCATION
C135	7D	2B	C610	2F	5N	R374	5D	10E	U600	1E	4L
C138	8E	2B	C613	2E	4K	R390	1K	8F	U601	2E	5K
C140	8D	1C	C701	3H	10K	R392	8F	7C	U602	1F	3K
C155	7E	1B	C702	3J	9J	R481	1C	4H	U603	1G	3M
C156	8E	1B	C703	3J	10K	R504	1M	9C	U604	2F	5M
C171	5A	2B	C704	3J	9K	R701	3H	9J	U606	2F	5M
C172	1A	3C	C705	4A	9G	R709	3J	9H	U701	3J	9J
C180	8D	6D	C708	3H	9J	R723	5H	9J	U702	3J	9K
C181	7A	6D	C801	4A	8K	R733	3J	10K	U801	5G	7H
C205	3H	10H	C806	5G	8H	R734	4B	9G	U802	6J	8H
C206	3H	10H	C815	6J	7H	R837	7J	8K	U901A	5K	9A
C214	7B	4D	C816	7J	8H	R915	5L	9A	U901B	5L	9A
C215	7B	5D	C818	4B	7K	R916	5L	9A	U901	5J	9A
C216	2B	5G	C901	5K	9A	R1026	8F	7M	U930	5J	7B
C217	1B	4G	C902	5K	7A	R1027	6F	8L	U931	3L	9B
C219	7B	5D	C903	5M	8A	R1101	6G	1J	U932	5K	7A
C224	7B	3D	C904	5M	9B	R1102	8G	1J	U1001	7F	7L
C225	7B	3D	C1005	7F	7M	R1158	1L	2J	U1101	7H	2M
C229	7B	3D	C1006	7F	8L	R1159	3M	2J	U1102	7H	1L
C234	7C	2D	C1101	6G	1M	R2783	4D	7N	U1103	1L	2K
C235	7C	2D	C1102	8G	2M				U1104	2L	2M
C239	7C	2D	C1158	1L	2K	U112	7D	6C	U1106	2M	2J
C244	7D	1D	C1159	3M	2J	U122	7D	4C			
C245	7C	1D	C2701	5H	7L	U171	5A	3B	W103	6A	6D
C249	7D	1D	C2702	8G	6L	U172	6A	3B	W235	7E	5D
C265	5B	5F	C2709	4E	7M	U173	1A	3C	W900	5M	9B
C282	3B	4F				U201	1B	5H	W1103	2L	1K
C283	6B	6F	J1204	1A	5J	U202	1B	5G	W1200	1H	6F
C297	3C	5F				U203	3H	10G	W1201	3L	8C
C298	3B	3F	L101	5A	2C	U210	7B	5D	W1202	2H	9H
C304	5D	7D	L102	8D	2C	U220	7B	4D	W1204	1H	7G
C309	2H	6H	L201	6A	6E	U230	7C	3E	W1205	2E	4N
C316	5C	8E	L216	2B	4H	U240	7C	2E	W1209	1E	2J
C317	1K	8E	L217	1B	5H	U260	5B	5F	W1210	1E	4K
C318	8J	9E	L445	1C	3H	U301	1K	8D	W1216	3L	8C
C320	1H	8F	L446	2C	4H	U302	5E	8C	W1217	3G	6H
C337	5D	9E	L475	1C	1J	U303	5E	9C	W1218	3G	5H
C338	8A	8G	L476	2D	2H	U304	5F	8D	W1221	3B	4H
C339	8B	9G				U307	5E	7D	W1222	8B	6D
C351	5F	7C	P2302	8M	10D	U308	5E	7D	W1223	3K	6D
C445	1C	3G				U309	5F	7C	W1231	6F	8K
C475	1C	1G	R182	8D	6D	U310	5E	9D	W1237	8F	6K
C481	2C	3G	R208	3H	10H	U311	5E	9D	W1247	5C	6D
C482	2D	2G	R226	7B	6E	U315	1H	8F	W1248	5G	6H
C501	1E	2N	R245	7C	3D	U316	2H	7H	W1249	5G	5H
C502	1E	2N	R282	3B	3F	U421	2C	3G	W1250	5H	7K
C503	3E	5N	R283	6B	6F	U431	2C	2G	W1251	8A	6H
C505	2M	9C	R297	3C	6F	U441	1D	2H	W1252	8A	5H
C604	2F	5M	R298	3B	3F	U501	1E	3N	W1255	5B	6F
C605	1F	4L	R312	5D	7C	U502	2E	3N	W1277	4D	8K
C606	1F	2J	R339	8J	8E	U503	3E	5N	W2302	8M	10D
C609	1G	3M	R345	5C	8E	U506	2M	9C	W2502	1M	1K

Partial A10 also shown on diagrams 1, 2, 3, 4, 5, 6 and 7.

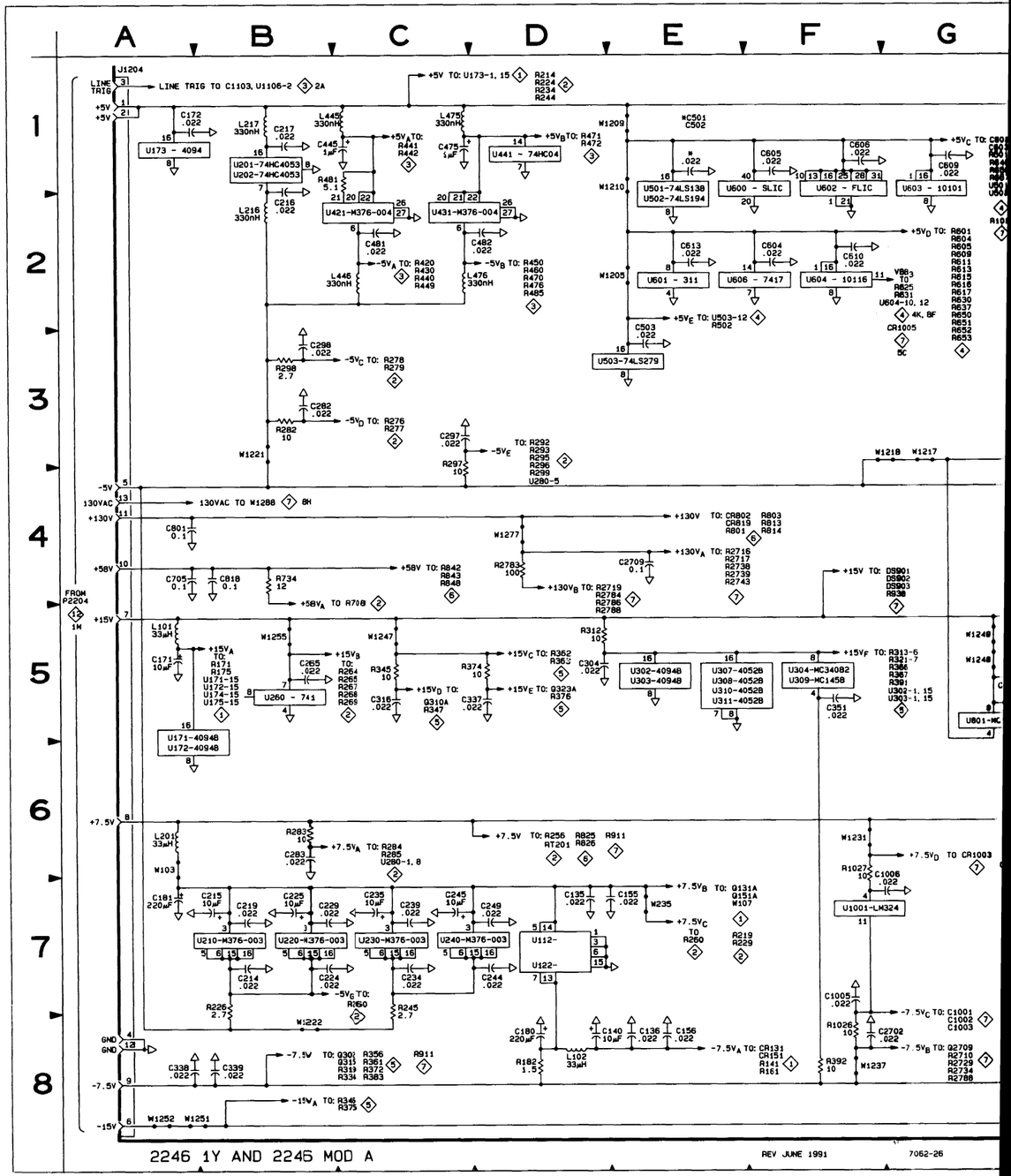

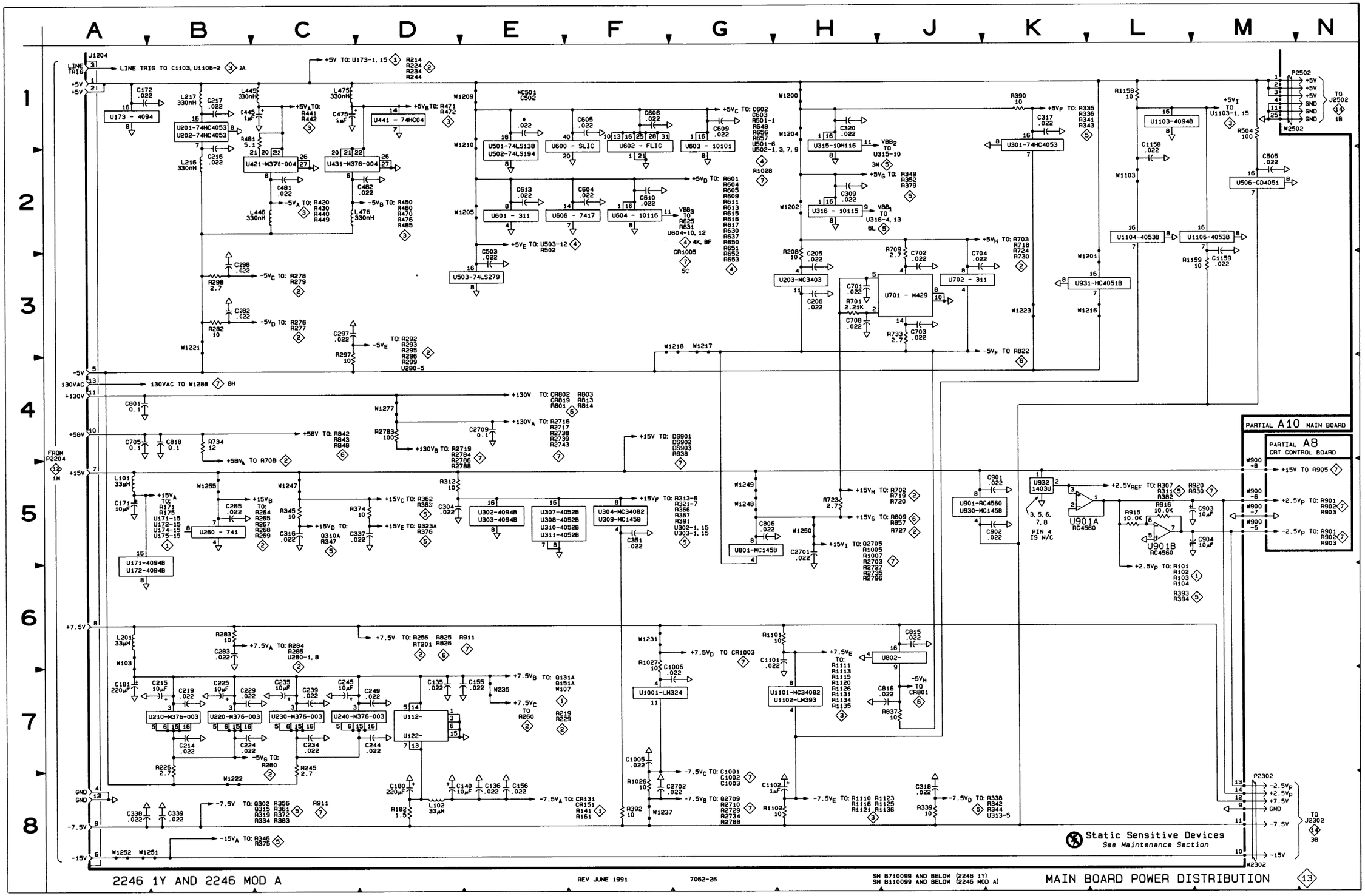

2246 1Y AND 2246 MOD A

REV JUNE 1991

7062-26

SN B710099 AND BELOW (2246 1Y)
SN B110099 AND BELOW (2246 MOD A)

MAIN BOARD POWER DISTRIBUTION

13

PROCESSOR BOARD POWER DISTRIBUTION DIAGRAM 14

ASSEMBLY A12

CIRCUIT NUMBER	SCHEM LOCATION	BOARD LOCATION	CIRCUIT NUMBER	SCHEM LOCATION	BOARD LOCATION	CIRCUIT NUMBER	SCHEM LOCATION	BOARD LOCATION	CIRCUIT NUMBER	SCHEM LOCATION	BOARD LOCATION
J2105	3L	1B									

Partial A12 also shown on diagram 11.

ASSEMBLY A14

CIRCUIT NUMBER	SCHEM LOCATION	BOARD LOCATION	CIRCUIT NUMBER	SCHEM LOCATION	BOARD LOCATION	CIRCUIT NUMBER	SCHEM LOCATION	BOARD LOCATION	CIRCUIT NUMBER	SCHEM LOCATION	BOARD LOCATION
C2001	1M	2B	P2501	1L	1B	U2001 U2002	1L 1L	2B 4B	W2501	1L	1B

Partial A14 also shown on diagram 10.

ASSEMBLY A16

CIRCUIT NUMBER	SCHEM LOCATION	BOARD LOCATION	CIRCUIT NUMBER	SCHEM LOCATION	BOARD LOCATION	CIRCUIT NUMBER	SCHEM LOCATION	BOARD LOCATION	CIRCUIT NUMBER	SCHEM LOCATION	BOARD LOCATION
C2304	3B	8A	C2503	2C	4F	U2300	1E	5B	U2411	2E	4B
C2311	1C	5B	C2504	2C	5G	U2301	1E	5B	U2412	6G	5D
C2312	1C	5B	C2505	2C	5K	U2302	1H	6B	U2413	7G	5C
C2313	1C	6B	C2506	2C	5H	U2303	6G	7A	U2414	6H	6D
C2314	6B	8A	C2507	2C	4G	U2304	6C	7B	U2415	7H	6C
C2315	7B	7B	C2508	2C	4G	U2305	7C	7B	U2416	7C	7D
C2316	1J	7B	C2509	2C	6F	U2306	6E	7C	U2417	1F	1A
C2317	6G	7C	C2510	2C	6J	U2308	6F	7G	U2501	1C	6G
C2319	1C	6F	C2511	2C	4H	U2309	7F	7G	U2502	1G	6K
C2321	1C	6F	C2530	2C	6H	U2313	1E	6E	U2503	1F	4H
C2401	1C	3B	C2531	2C	6H	U2314	6C	7B	U2506	2F	5K
C2402	1C	4B	C2532	2C	7H	U2400	1G	3C	U2512	2E	4F
C2403	1C	1C	C2541	1B	6K	U2401	2E	5F	U2513	2E	4J
C2404	1C	5E				U2402	2E	5F	U2514	2E	5H
C2405	1C	2A	J2302	3B	8B	U2403	2E	1C	U2515	2E	4H
C2406	1C	4A	J2501	1L	8H	U2404	1F	4B	U2517	1F	5F
C2407	2C	4D	J2502	1B	3J	U2405	1F	3B	U2518	1F	4K
C2408	2C	5D	J2601	5L	2A	U2406	1D	4C	U2519	1D	6J
C2409	2C	3D				U2407	1F	5E	U2523	2E	7H
C2410	2C	2B	P2105	3L	8G	U2408	1D	5C	U2524	2E	6J
C2415	6H	7D				U2409	1F	3B	U2525	2E	7J
C2501	2C	4K	R2309	6G	7C	U2410	2E	2B			
C2502	2C	4F	R2412	6H	7D				W2105	3L	8G

Partial A16 also shown on diagrams 8, 9, 10 and 11.

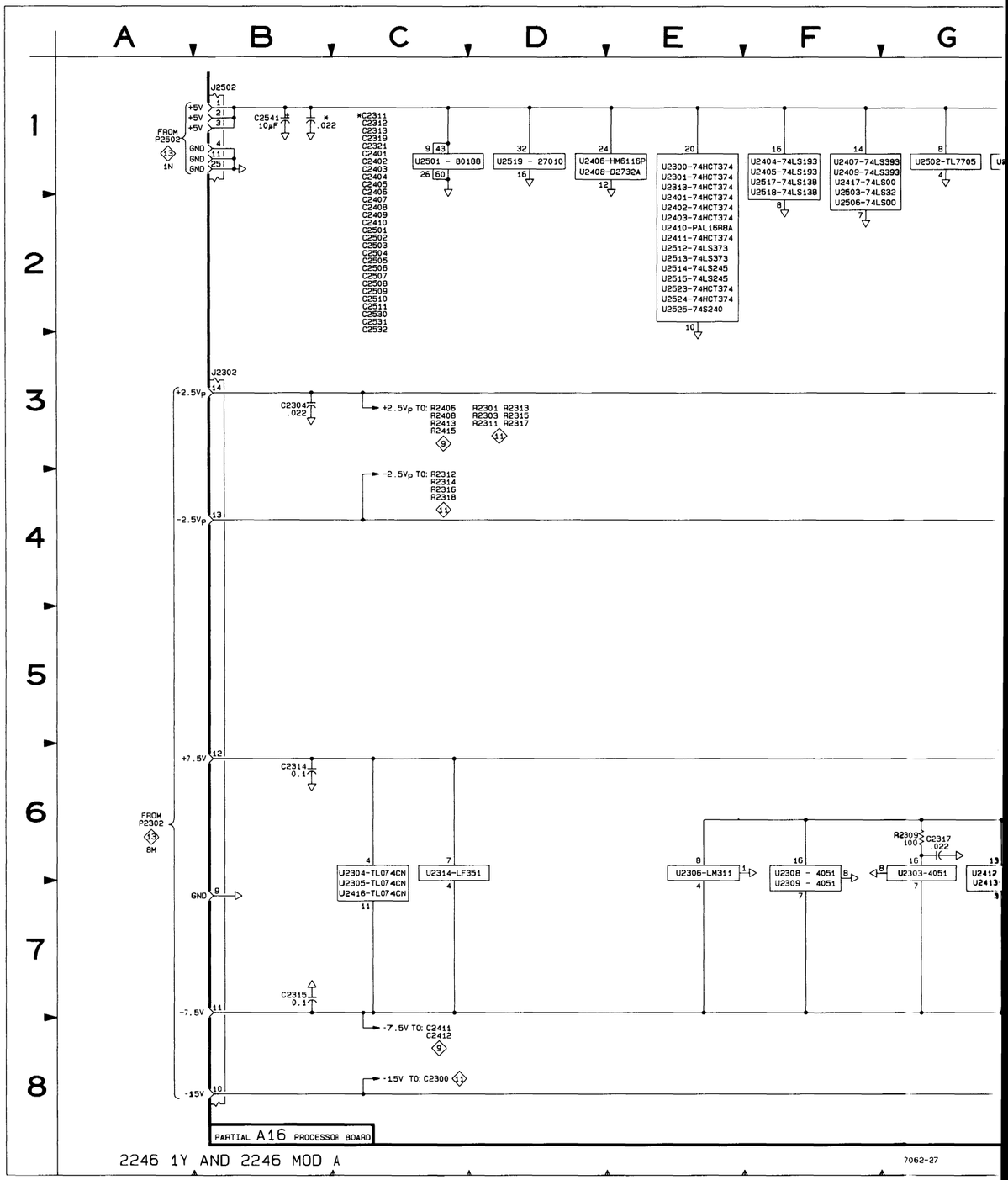

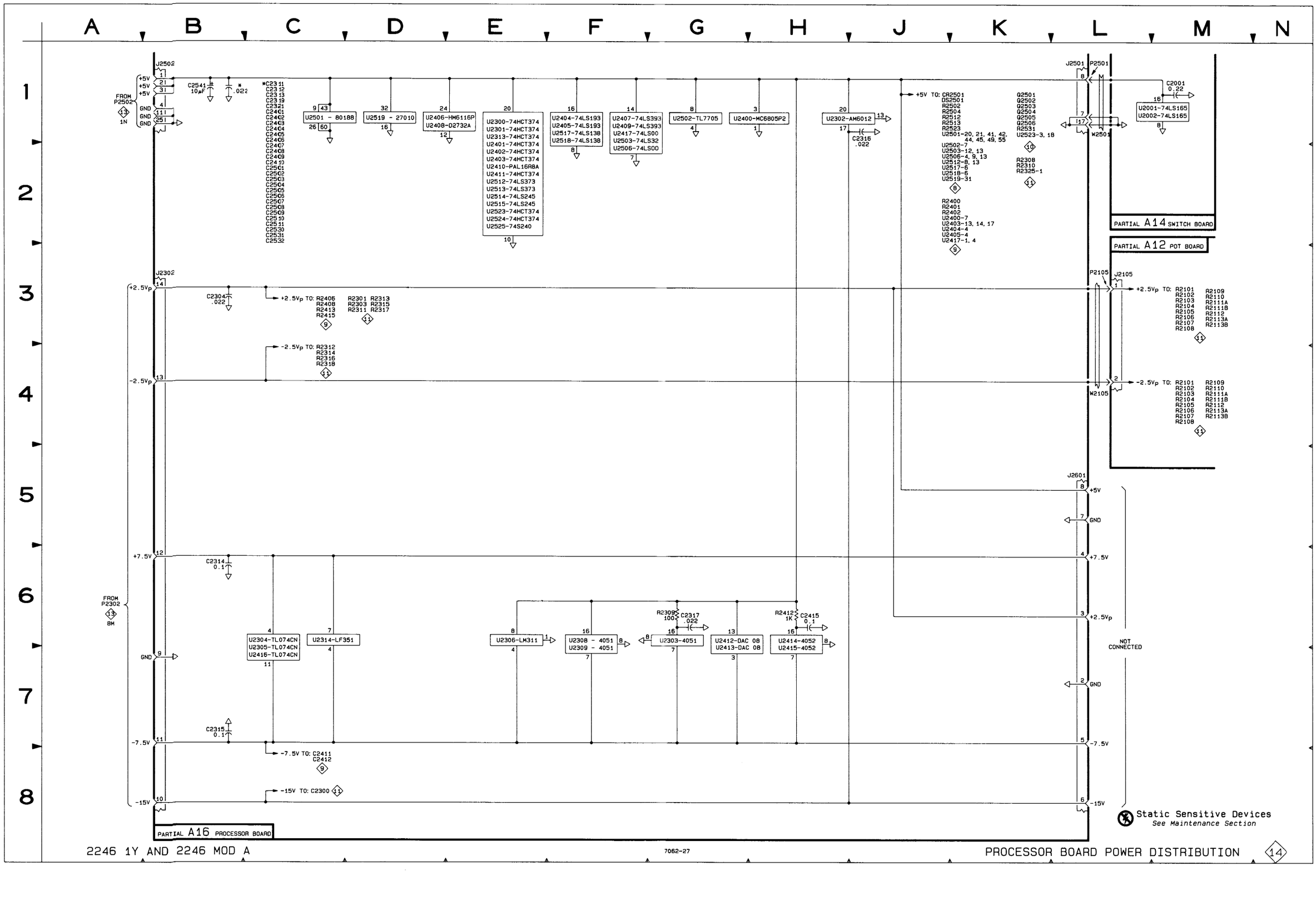
J2502
+5V
+5V
+5V
GND
GND
GND
FROM P2502
1N
C2541 10µF
* .022
*C2311 C2312 C2313 C2319 C2321 C2401 C2402 C2403 C2404 C2405 C2406 C2407 C2408 C2409 C2410 C2501 C2502 C2503 C2504 C2505 C2506 C2507 C2508 C2509 C2510 C2511 C2530 C2531 C2532
U2501 - 80188
U2519 - 27010
U2406-HM6116P
U2408-D2732A
U2300-74HCT374
U2301-74HCT374
U2313-74HCT374
U2401-74HCT374
U2402-74HCT374
U2403-74HCT374
U2410-PAL16R8A
U2411-74HCT374
U2512-74LS373
U2513-74LS373
U2514-74LS245
U2515-74LS245
U2523-74HCT374
U2524-74HCT374
U2525-74S240
U2404-74LS193
U2405-74LS193
U2517-74LS138
U2518-74LS138
U2407-74LS393
U2409-74LS393
U2417-74LS00
U2503-74LS32
U2506-74LS00
U2502-TL7705
U2400-MC6805P2
U2302-AM6012
C2316 .022
+5V TO: CR2501 DS2501 R2502 R2504 R2512 R2513 R2523 U2501-20, 21, 41, 42, 44, 45, 49, 55 U2502-7 U2503-12, 13 U2506-4, 9, 13 U2512-8, 13 U2517-6 U2518-6 U2519-31
R2400 R2401 R2402 U2400-7 U2403-13, 14, 17 U2404-4 U2405-4 U2417-1, 4
G2501 G2502 G2503 G2504 G2505 G2506 R2531 U2523-3, 18
R2308 R2310 R2325-1
J2501 P2501
W2501
C2001 0.22
U2001-74LS165 U2002-74LS165
PARTIAL A14 SWITCH BOARD
PARTIAL A12 POT BOARD
J2302
+2.5Vp
C2304 .022
+2.5Vp TO: R2406 R2408 R2413 R2415 R2301 R2303 R2311 R2313 R2315 R2317
-2.5Vp TO: R2312 R2314 R2316 R2318
-2.5Vp
P2105 J2105
+2.5Vp TO: R2101 R2102 R2103 R2104 R2105 R2106 R2107 R2108 R2109 R2110 R2111A R2111B R2112 R2113A R2113B
-2.5Vp TO: R2101 R2102 R2103 R2104 R2105 R2106 R2107 R2108 R2109 R2110 R2111A R2111B R2112 R2113A R2113B
W2105
J2601
+5V
GND
+7.5V
+2.5Vp
GND
-7.5V
-15V
NOT CONNECTED
FROM P2302
8M
+7.5V
C2314 0.1
GND
-7.5V
C2315 0.1
-7.5V TO: C2411 C2412
-15V TO: C2300
-15V
U2304-TL074CN U2305-TL074CN U2416-TL074CN
U2314-LF351
U2306-LM311
U2308 - 4051 U2309 - 4051
U2303-4051
R2309 100
C2317 .022
U2412-DAC 08 U2413-DAC 08
R2412 1K
C2415 0.1
U2414-4052 U2415-4052
PARTIAL A16 PROCESSOR BOARD
Static Sensitive Devices
See Maintenance Section

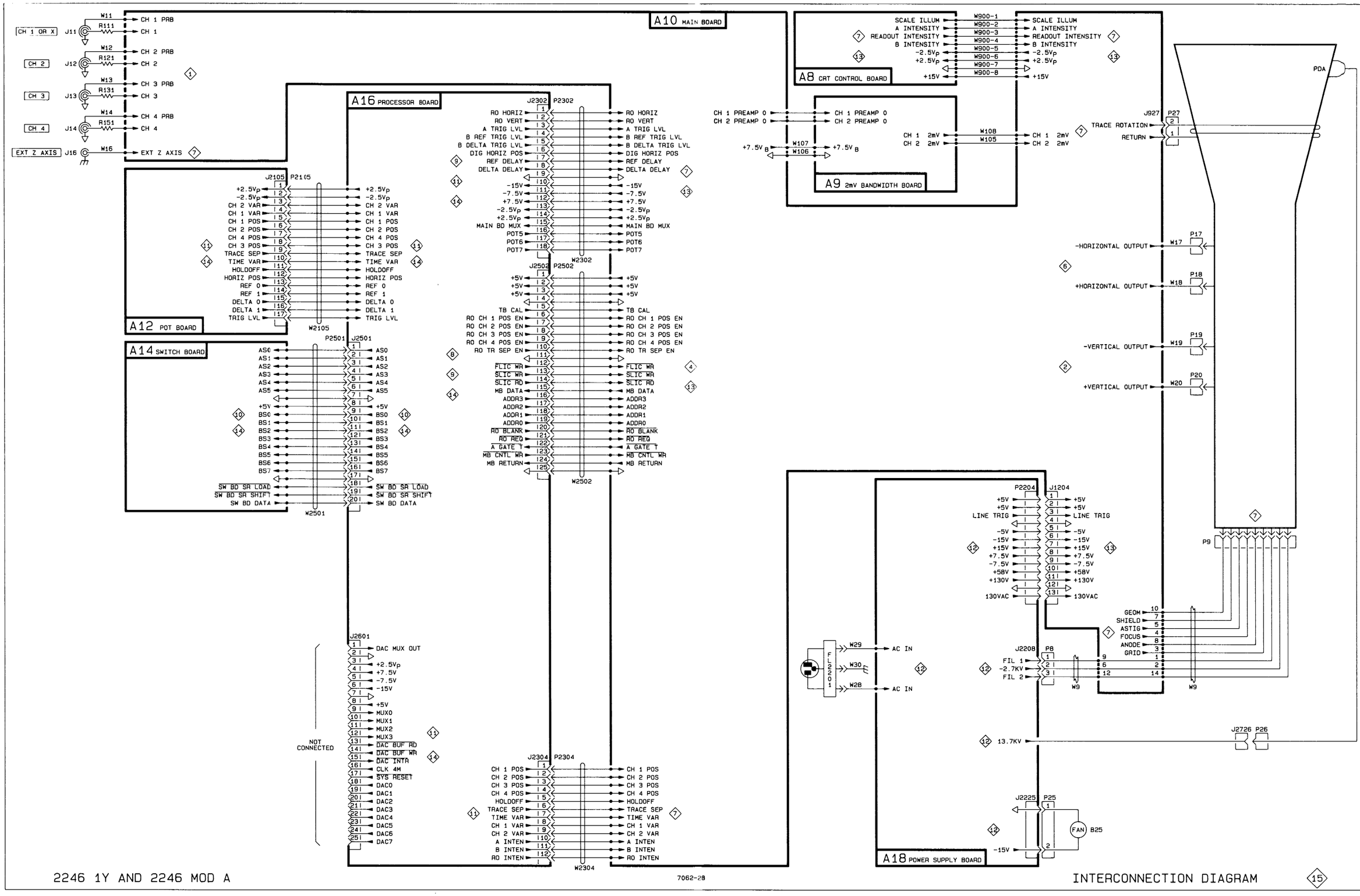

2246 1Y AND 2246 MOD A

7062-28

INTERCONNECTION DIAGRAM 15

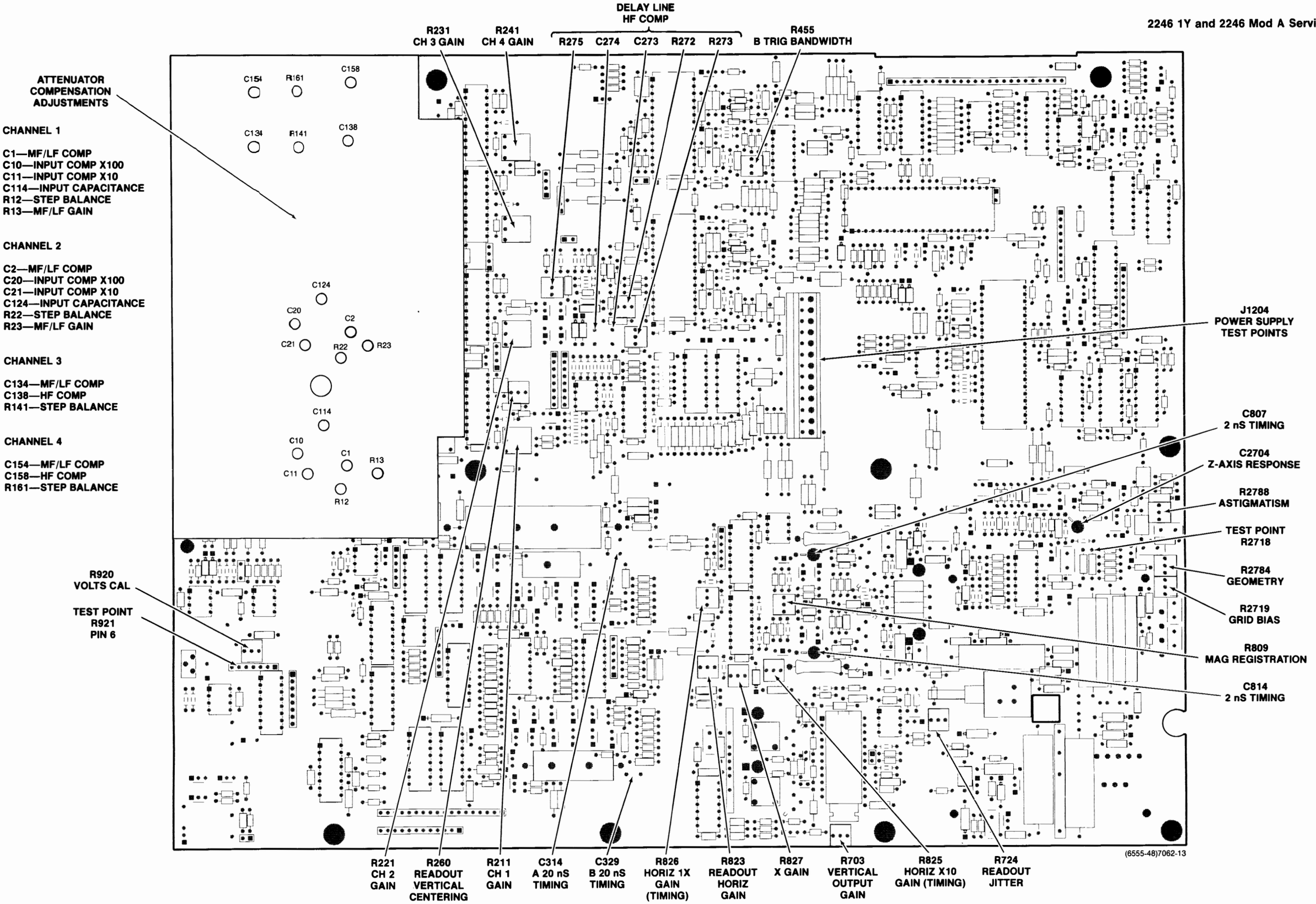

Figure 9-14. A10—Main board adjustment locations.

REPLACEABLE MECHANICAL PARTS

PARTS ORDERING INFORMATION

Replacement parts are available from or through your local Tektronix, Inc. Field Office or representative.

Changes to Tektronix instruments are sometimes made to accommodate improved components as they become available, and to give you the benefit of the latest circuit improvements developed in our engineering department. It is therefore important, when ordering parts, to include the following information in your order: Part number, instrument type or number, serial number, and modification number if applicable.

If a part you have ordered has been replaced with a new or improved part, your local Tektronix, Inc. Field Office or representative will contact you concerning any change in part number.

Change information, if any, is located at the rear of this manual.

ITEM NAME

In the Parts List, an item Name is separated from the description by a colon(:). Because of space limitations, an Item Name may sometimes appear as incomplete. For further Item Name identification, the U.S. Federal Cataloging Handbook H6-1 can be utilized where possible.

FIGURE AND INDEX NUMBERS

Items in this section are referenced by figure and index numbers to the illustrations.

INDENTATION SYSTEM

This mechanical parts list is indented to indicate item relationships. Following is an example of the indentation system used in the description column.

1 2 3 4 5 *Name & Description*

Assembly and/or Component
Attaching parts for Assembly and/or Component

END ATTACHING PARTS

Detail Part of Assembly and/or Component
Attaching parts for Detail Part

END ATTACHING PARTS

Parts of Detail Part
Attaching parts for Parts of Detail Part

END ATTACHING PARTS

Attaching Parts always appear in the same indentation as the item it mounts, while the detail parts are indented to the right. Indented items are part of, and included with, the next higher indentation.

Attaching parts must be purchased separately, unless otherwise specified.

ABBREVIATIONS

Abbreviations conform to American National Standards Institute Y1.1

CROSS INDEX – MFR. CODE NUMBER TO MANUFACTURER

Mfr. Code	Manufacturer	Address	City, State, Zip Code
S3109	FELLER	72 Veronica Ave Unit 4	Summerset NJ 08873
S3629	SCHURTER AG H C/O PANEL COMPONENTS CORP	2015 SECOND STREET	BERKELEY CA 94170
TK0435	LEWIS SCREW CO	4300 S RACINE AVE	CHICAGO IL 60609-3320
TK0860	LABEL GRAPHICS	6700 SW BRADBURY CT	PORTLAND OR 97224
TK0892	GEROME CORP	OLIVER RD PO BOX 1089	UNIONTOWN PA 15041
TK1163	POLYCAST INC	9898 SW TIGARD ST	TIGARD OR 97223
TK1326	NORTHWEST FOURSLIDE INC	18224 SW 100TH CT	TUALATIN OR 97062
TK1499	AMLAN INC	97 THORNWOOD RD	STAMFORD CT 06903-2617
TK1614	STUCKEL R J CO	1385 HOWARD ST	ELK GROVE VILLAGE IL 60007-2213
TK1692	SEA LECT PRODUCTS INC	821 S THIRD	KENT WA 98032-6129
TK1808	FASTEX	195 ALGONQUIN RD	DES PLAINES IL 60016
TK1908	PLASTIC MOLDED PRODUCTS	4336 SO ADAMS	TACOMA WA 98409
TK1918	SHIN-ETSU POLYMER AMERICA INC	1181 NORTH 4TH ST	SAN JOSE CA 95112
TK1935	ACCRA FAB INC	11007 NE 37TH CIRCLE	VANCOUVER WA 98682
TK1938	GALGON INDUSTRIES	37399 CENTRAL MONT PLACE	FREMONT CA 94536
TK2120	LARSCO	PO BOX 1127	CLACKAMAS OR 97015
TK2147	WALKER SPRING & STAMPING CORP	14831 SPRING AVE	SANTA FE SPRINGS CA 90670-5109
TK2432	UNION ELECTRIC	15/F #1, FU-SHING N. ROAD	TAIPEI, TAIWAN ROC
0JRZ2	BADGLEY MFG CO	1620 NE ARGYLE	PORTLAND OR 97211
0JR05	TRIQUEST CORP	3000 LEWIS AND CLARK HWY	VANCOUVER WA 98661-2999
0J260	COMTEK MANUFACTURING OF OREGON (METALS)	PO BOX 4200	BEAVERTON OR 97076-4200
0J9P9	GEROME MFG CO INC	PO BOX 737	NEWBERG OR 97132
0KBZ5	MORELLIS Q & D PLASTICS	1812 16TH AVE	FOREST GROVE OR 97116
0KB01	STAUFFER SUPPLY	810 SE SHERMAN	PORTLAND OR 97214
05469	BEARINGS INC	3634 EUCLID P O BOX 6925	CLEVELAND OH 44101
06915	RICHCO PLASTIC CO	5825 N TRIPP AVE	CHICAGO IL 60646-6013
07416	NELSON NAME PLATE CO	3191 CASITAS	LOS ANGELES CA 90039-2410
12327	FREEWAY CORP	9301 ALLEN DR	CLEVELAND OH 44125-4632
13103	THERMALLOY CO INC	2021 W VALLEY VIEW LN PO BOX 810839	DALLAS TX 75381
18565	CHOMERICS INC	77 DRAGON COURT	WOBURN MA 01801-1039
2K262	BOYD CORP	6136 NE 87th AVE PO BOX 20038	PORTLAND OR 97220
28520	HEYCO MOLDED PRODUCTS	750 BOULEVARD P O BOX 160	KENILWORTH NJ 07033-1721
30161	AAVID ENGINEERING INC	ONE KOOL PATH PO BOX 400	LACONIA NH 03247
65249	BOGEN COMMUNICATIONS INC	50 SPRING STREET PO BOX 575	RAMSEY NJ 07446
70903	COOPER BELDEN ELECTRONICS WIRE AND CABLE SUB OF COOPER INDUSTRIES INC		
71400	BUSSMANN DIV OF COOPER INDUSTRIES INC	114 OLD STATE RD PO BOX 14460	ST LOUIS MO 63178
73743	FISCHER SPECIAL MFG CO	111 INDUSTRIAL RD	COLD SPRING KY 41076-9749
75915	LITTELFUSE INC SUB TRACOR INC	800 E NORTHWEST HWY	DES PLAINES IL 60016-3049

CROSS INDEX – MFR. CODE NUMBER TO MANUFACTURER

Mfr. Code	Manufacturer	Address	City, State, Zip Code
78189	ILLINOIS TOOL WORKS INC SHAKEPROOF DIV	ST CHARLES ROAD	ELGIN IL 60120
80009	TEKTRONIX INC	14150 SW KARL BRAUN DR PO BOX 500	BEAVERTON OR 97077-0001
83014	HARTWELL CORP LOCKWELL DIVISION	950 S RICHFIELD RD	PLACENTIA CA 92670-6732

Fig. & Index No.	Tektronix Part No.	Serial No. Effective	Dscont	Qty	12345 Name & Description	Mfr. Code	Mfr. Part No.
1-1	334-6445-00			1	MARKER,IDENT:MKD TEKTRONIX 2246	07416	ORDER BY DESC
-2	437-0390-00			1	CABINET ASSY:390-1057-00 W/FEET & HANDLE	TK1935	ORDER BY DESC
-3	337-2395-00			2	.SHIELD,ELEC:HANDLE ATTACHING PARTS	TK1614	ORDER BY DESC
-4	213-0138-00			4	.SCREW,TPG,TF:4-24 X 0.188,TYPE B,PNH,STL END ATTACHING PARTS	TK0435	ORDER BY DESC
-5	367-0289-00			1	.HANDLE,CARRYING:13.855,SST, ATTACHING PARTS	80009	367028900
-6	212-0144-00			2	.SCREW,TPG,TF:8-16 X 0.562 L,PLASTITE,SPCL .HD END ATTACHING PARTS	0KB01	ORDER BY DESC
-7	390-1057-01			1	.CABINET,SCOPE:EMI VERSION,ALUMINUM	80009	390105701
-8	348-0659-00			2	.FOOT,CABINET:BLACK POLYURETHANE	0JR05	ORDER BY DESC
-9	348-0764-04			1	.SHLD GSKT,ELEK:0.125 X 0.188,WIRE MESH,2 .LAYERS,37.0 L	18565	ORDER BY DESC
-10	200-3660-00			1	COVER,AUTO CAL:POLYCARBONATE	TK1163	ORDER BY DESC
-12	200-3233-02			1	COVER,REAR:PLASTIC,W/LABELS ATTACHING PARTS	80009	200323302
-13	211-0691-00	B100100	B114168	4	SCREW,MACHINE:6-32 X 0.625,PNH,STL (2246 MOD A,2Y)	0KB01	ORDER BY DESC
	213-0942-00	B114169		4	SCREW,TPG,TR:6-32 X 0.75,TYPE TT,PNH,STL (2246 MOD A,2Y)	0KB01	ORDER BY DESC
	211-0691-00	B700100	B711094	4	SCREW,MACHINE:6-32 X 0.625,PNH,STL (2246 1Y)	0KB01	ORDER BY DESC
	213-0942-00	B711095		4	SCREW,TPG,TR:6-32 X 0.75,TYPE TT,PNH,STL (2246 1Y) END ATTACHING PARTS	0KB01	ORDER BY DESC
-14	----------			2	(PART OF FIG 1-12)		
-15	334-6707-00			1	MARKER,IDENT:MKD CAUTION	07416	ORDER BY DESC
-16	334-6708-00			1	MARKER,IDENT:MKD REAR PANEL Z-AXIS,	07416	ORDER BY DESC

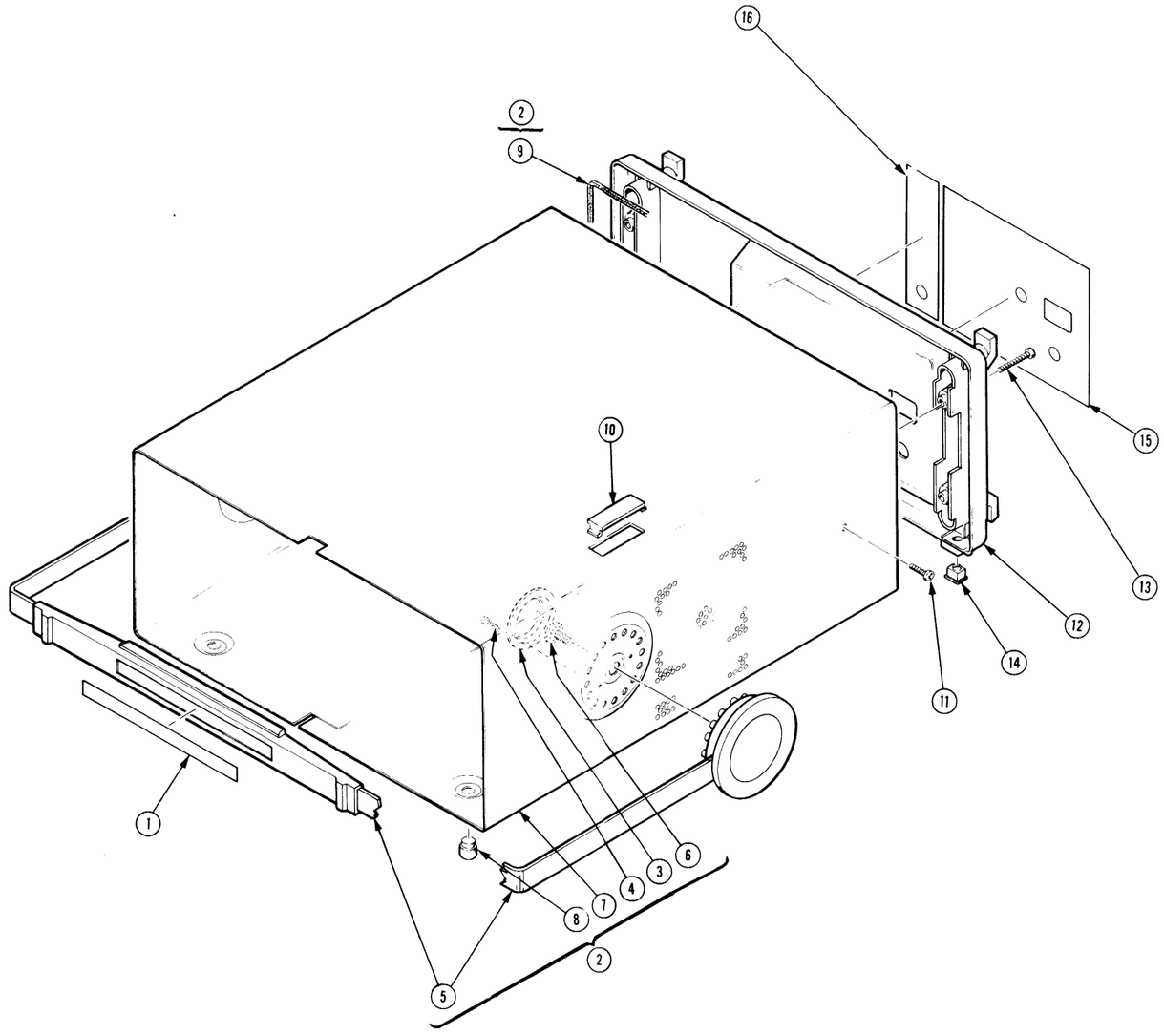
16
2
9
10
15
13
12
14
11
1
5
8
7
4
3
6
2

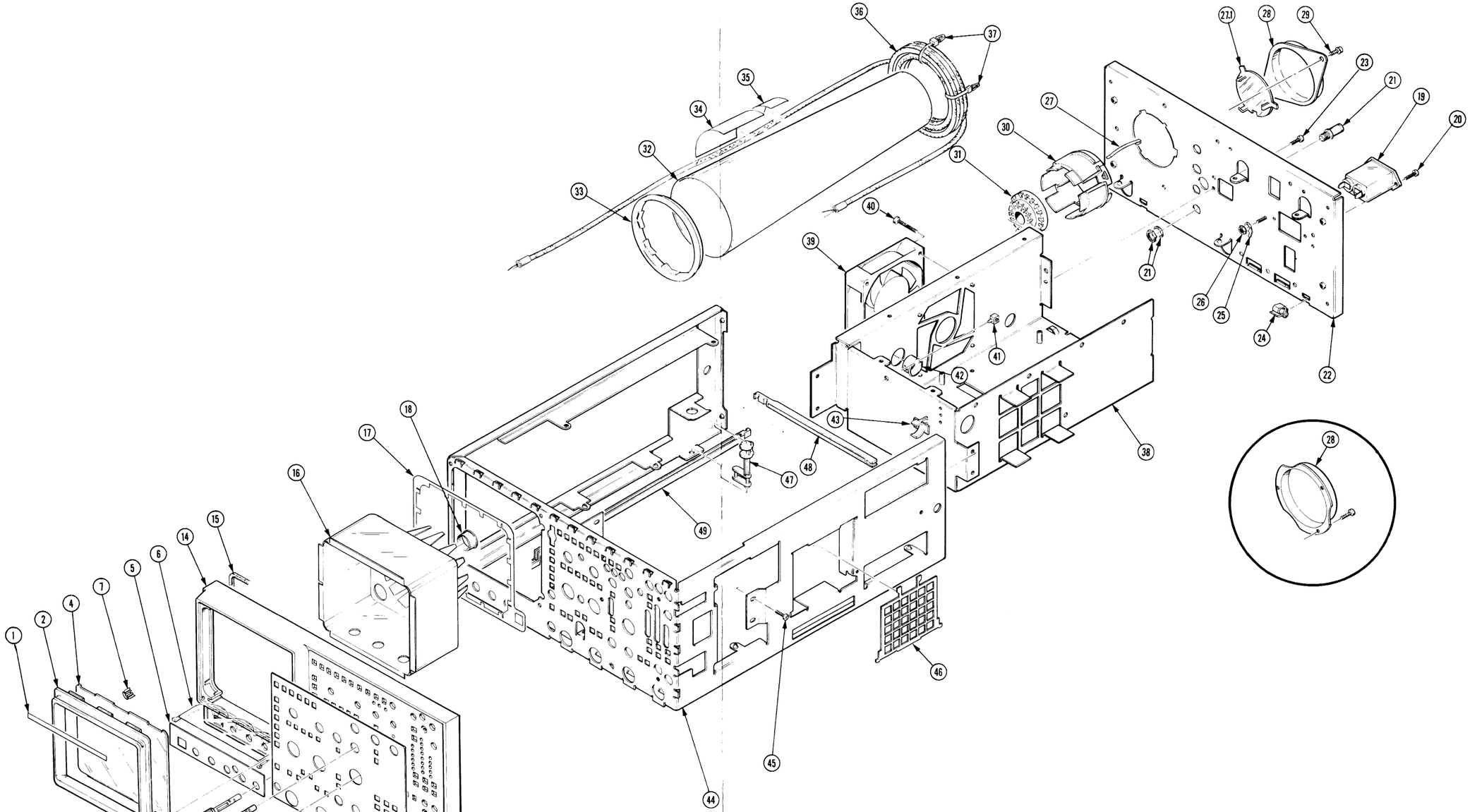
1
2
3
4
5
6
7
8
9
10
11
12
13
14
15
16
17
18
19
20
21
22
23
24
25
26
27
27.1
28
29
30
31
32
33
34
35
36
37
38
39
40
41
42
43
44
45
46
47
48
49

Fig. & Index No.	Tektronix Part No.	Serial No. Effective	Dscont	Qty	12345 Name & Description	Mfr. Code	Mfr. Part No.
2-1	334-6446-00			1	MARKER,IDENT:MKD TEKTRONIX 2246	07416	ORDER BY DESC
-2	426-1765-02			1	FRAME,CRT:POLYCARBONATE,GRAY, ATTACHING PARTS	0JR05	ORDER BY DESC
-3	211-0690-01			2	SCREW,MACHINE:6-32 X 0.875 PNH,SST END ATTACHING PARTS	0KB01	ORDER BY DESC
-4	337-2775-00			1	SHLD,IMPLOSION:FILTER,BLUE	0JR05	ORDER BY DESC
-5	333-3290-00			1	PANEL,FRONT:	07416	ORDER BY DESC
-6	351-0752-00			1	GUIDE,LIGHT:ACRYLIC GRATICULE	TK1908	PER TEK DRAWING
-7	348-0660-00			4	CUSHION,CRT:POLYURETHANE	80009	348066000
-8	366-2089-00			5	KNOB:GRAY,PUSH ON,0.185 ID X 0.392 OD X 0.495 H	TK1908	PER TEK DRAWING
-9	366-2093-00			2	KNOB:DOVE GRAY,0.235 ID X 0.36 OD X 0.495H W/SHAFT PUSHON W/O INDEX	TK1908	PER TEK DRAWING
-10	366-1510-00			3	KNOB:DOVE GRAY,VAR,0.127 ID X 0.392 OD X 0.466 H	0JR05	ORDER BY DESC
-11	366-2090-00			3	KNOB:GRAY,VAR,0.2 ID X 0.546 ODX 0.69 H	TK1908	PER TEK DRAWING
-12	366-2089-00			8	KNOB:GRAY,PUSH ON,0.185 ID X 0.392 OD X 0.495 H	TK1908	PER TEK DRAWING
-13	333-3282-00			1	PANEL,FRONT:	07416	ORDER BY DESC
-14	386-3339-00			1	SUBPANEL,FRONT:	TK1908	PER TEK DRAWING
-15	348-1021-00			1	SHLD GSKT,ELEK:2 LAYER,0.094 X 0.188 X 37	0J9P9	ORDER BY DESC
-16	337-3485-01			1	SHIELD,ELEC:CRT,MAGNETIC FRONT	0J9P9	ORDER BY DESC
-17	348-1015-00	B100100	B110537	1	GASKET,CRT SHLD:CU BE (2246 MOD A,2Y)	80009	348101500
	348-1130-00	B110538		1	SHLD GSKT,ELEK:EMI,SST (2246 MOD A,2Y)	TK1326	ORDER BY DESC
	348-1015-00	B700100	B710264	1	GASKET,CRT SHLD:CU BE (2246 1Y)	80009	348101500
	348-1130-00	B710265		1	SHLD GSKT,ELEK:EMI,SST (2246 1Y)	TK1326	ORDER BY DESC
-18	348-0532-00			2	GROMMET,PLASTIC:BLACK,ROUND,0.625 ID	28520	2096
-19	----------			1	FILTER,RFI: (SEE FL2201 REPL) ATTACHING PARTS		
-20	213-0882-00			2	SCREW,TPG,TR:6-32 X 0.437 TAPTITE,PNH,STL END ATTACHING PARTS	0KB01	ORDER BY DESC
-21	----------			1	CONN,RCPT,ELEC:BNC (SEE J16 REPL)		
-22	441-1791-00	B100100	B111389	1	CHASSIS,REAR: (2246 MOD A,2Y)	0J260	ORDER BY DESC
	441-1791-01	B111390		1	CHASSIS,REAR:EMI VERSION (2246 MOD A,2Y)	0J260	ORDER BY DESC
	441-1791-00	B700100	B710984	1	CHASSIS,REAR: (2246 1Y)	0J260	ORDER BY DESC
	441-1791-01	B710985		1	CHASSIS,REAR:EMI VERSION (2246 1Y) ATTACHING PARTS	0J260	ORDER BY DESC
-23	213-0882-00			10	SCREW,TPG,TR:6-32 X 0.437 TAPTITE,PNH,STL END ATTACHING PARTS	0KB01	ORDER BY DESC
-24	343-1240-00			2	CLAMP,CABLE:0.25 ID,NYLON	TK1808	220-340802-00
-25	----------			1	LEAD,ELECTRICAL: (SEE W30 REPL) ATTACHING PARTS		
-26	210-0457-00			1	NUT,PL,ASSEM WA:6-32 X 0.312,STL CD PL	TK0435	ORDER BY DESC
	210-0006-00			1	WASHER,LOCK:#6 INTL,0.018 THK,STL END ATTACHING PARTS	78189	1206-00-00-0541
-27	214-1061-06			1	SPRING,GROUND:CRT SHIELD	TK1326	ORDER BY DESC
-27.1	200-2519-00	B114612		1	CAP,CRT SOCKET:NATURAL LEXAN, (2246 MOD A,2Y)	80009	200251900
	200-2519-00	B711095		1	CAP,CRT SOCKET:NATURAL LEXAN, (2246 1Y)	80009	200251900

Fig. & Index No.	Tektronix Part No.	Serial No. Effective	Serial No. Dscont	Qty	12345 Name & Description	Mfr. Code	Mfr. Part No.
-28	337-3411-00	B100100	B114611	1	SHIELD,ELEC:CRT,REAR (2246 MOD A,2Y)	0J9P9	ORDER BY DESC
	200-2809-00	B114612		1	COVER,CRT:REAR,ALUMINUM (2246 MOD A,2Y)	TK1692	76280-000
	337-3411-00	B700100	B711094	1	SHIELD,ELEC:CRT,REAR (2246 1Y)	0J9P9	ORDER BY DESC
	200-2809-00	B711095		1	COVER,CRT:REAR,ALUMINUM (2246 1Y)	TK1692	76280-000
					ATTACHING PARTS		
-29	213-0882-00	B100100	B114611	3	SCREW,TPG,TR:6-32 X 0.437 TAPTITE,PNH,STL (2246 MOD A,2Y)	0KB01	ORDER BY DESC
	213-0882-00	B114612		2	SCREW,TPG,TR:6-32 X 0.437 TAPTITE,PNH,STL (2246 MOD A,2Y)	0KB01	ORDER BY DESC
	213-0882-00	B700100	B711094	3	SCREW,TPG,TR:6-32 X 0.437 TAPTITE,PNH,STL (2246 1Y)	0KB01	ORDER BY DESC
	213-0882-00	B711095		2	SCREW,TPG,TR:6-32 X 0.437 TAPTITE,PNH,STL (2246 1Y)	0KB01	ORDER BY DESC
					END ATTACHING PARTS		
-30	426-1766-00			1	MOUNT,RESILIENT:CRT,REAR,	80009	426176600
-31	----------			1	WIRE SET,ELEC:CRT SOCKET (SEE A10W9 REPL)		
-32	337-2774-00	B100100	B113054	1	SHIELD,ELEC:CRT,STEEL (2246 MOD A,2Y)	TK0892	ORDER BY DESC
	337-3487-00	B113055		1	SHIELD,ELEC:CRT,STL (2246 MOD A,2Y)	0J9P9	337-3487-00
	337-2774-00	B700100	B711092	1	SHIELD,ELEC:CRT,STEEL (2246 1Y)	TK0892	ORDER BY DESC
	337-3487-00	B711093		1	SHIELD,ELEC:CRT,STL (2246 1Y)	0J9P9	337-3487-00
-33	386-4443-00			1	SUPPORT,SHIELD:CRT,FRONT,PLASTIC	80009	386444300
-34	334-1951-00			1	MARKER,IDENT:MKD WARNING,CRT VOLTAGES	TK0860	ORDER BY DESC
-35	334-1379-00			1	MARKER,IDENT:MKD HI VACUUM	07416	ORDER BY DESC
-36	----------			1	DELAY LINE: (SEE DL21 REPL)		
-37	343-0549-00			2	STRAP,TIEDOWN,E:0.098 W X 4.0 L,ZYTEL	TK1499	HW-047
-38	441-1720-00			1	CHAS,PWR SUPPLY:GPSB	0J260	ORDER BY DESC
-39	----------			1	FAN,TUBAXIAL: (SEE B25 REPL)		
					ATTACHING PARTS		
-40	213-0991-00			4	SCREW,TPG,TC:6-32 X 1.25 L,TYPE T,PNH,STL	0KB01	ORDER BY DESC
					END ATTACHING PARTS		
-41	343-1305-00			1	CLP,WIRE SADDLE:0.437 ID,NYLON	TK2120	ORDER BY DESC
-42	348-0532-00			2	GROMMET,PLASTIC:BLACK,ROUND,0.625 ID	28520	2096
-43	344-0347-00			1	CLIP,ELECTRICAL:ANODE,0.72 OD,NYLON	0JR05	ORDER BY DESC
-44	441-1719-03			1	CHASSIS,MAIN:ALUMINUM	0J9P9	ORDER BY DESC
					ATTACHING PARTS		
-45	213-0882-00			6	SCREW,TPG,TR:6-32 X 0.437 TAPTITE,PNH,STL	0KB01	ORDER BY DESC
					END ATTACHING PARTS		
-46	378-0295-00			1	GRILLE,AIR DUCT:ALUMINUM	0J260	ORDER BY DESC
-47	214-3835-00			1	ARM,PIVOT:POWER SWITCH	TK1908	PER TEK DRAWING
-48	384-1697-00			1	EXTENSION SHAFT:6.25 L X 0.285 OD,NYLON	TK1908	PER TEK DRAWING
-49	384-1696-00	B100100	B100585	1	EXTENSION SHAFT:12.2 L X 0.285 OD,NYLON (2246 MOD A,2Y)	TK1908	PER TEK DRAWING
	384-1696-01	B100586		1	EXTENSION SHAFT:13.341 L X 0.285 OD,PC (2246 MOD A,2Y)	TK1908	ORDER BY DESC
	384-1696-01			1	EXTENSION SHAFT:13.341 L X 0.285 OD,PC (2246 1Y)	TK1908	ORDER BY DESC

Fig. & Index No.	Tektronix Part No.	Serial No. Effective	Dscont	Qty	12345 Name & Description	Mfr. Code	Mfr. Part No.
3-1	----------			1	CIRCUIT BD ASSY:POTENTIOMETER (SEE A12)		
-2	214-3826-00			7	LATCH,PLUNGER:BLACK	83014	3P-32-4-1
	348-0904-00			7	GROMMET,FSTNR:0.187 DIA,BLACK	83014	HN3G-32-1
-3	376-0130-00			3	COUPLER,SHAFT:2.260 L X 0.132 ID,POLYCARBONATE	TK1908	PER TEK DRAWING
-4	----------			1	CIRCUIT BD ASSY:SWITCH (SEE A14 REPL)		
-5	260-2271-00			1	SWITCH,PUSH:42 BUTTON,2 POLE	TK1918	PER TEK DRAWING
-6	366-2088-00			21	PUSH BUTTON:GRAY,0.172 SQ X 0.3 H	TK1908	PER TEK DRAWING
-7	105-0984-01			3	ACTR SWITCH AS:W/CONTACT	80009	105098401
-8	214-1126-01			3	SPRING,FLAT:0.7 X 0.125,CU BE GRN CLR	0J260	214-1126-01
-9	214-0274-00			3	BALL,BEARING:0.125 DIA,SST,GRADE 100	05469	ORDER BY DESC
-10	366-2091-00			17	PUSH BUTTON:CLEAR,0.312 DIA X 0.3 H	TK1908	PER TEK DRAWING
-11	380-0767-00			1	HOUSING,SWITCH:POLYCARBONATE	TK1908	PER TEK DRAWING
-12	----------			1	CIRCUIT BD ASSY:PROCESSOR (SEE A16 REPL) ATTACHING PARTS		
-13	213-0882-00			12	SCREW,TPG,TR:6-32 X 0.437 TAPTITE,PNH,STL	0KB01	ORDER BY DESC
-14	211-0691-00	B100100	B114168	2	SCREW,MACHINE:6-32 X 0.625,PNH,STL (2246 MOD A,2Y)	0KB01	ORDER BY DESC
	213-0942-00	B114169		2	SCREW,TPG,TR:6-32 X 0.75,TYPE TT,PNH,STL (2246 MOD A,2Y)	0KB01	ORDER BY DESC
	211-0691-00	B700100	B711094	2	SCREW,MACHINE:6-32 X 0.625,PNH,STL (2246 1Y)	0KB01	ORDER BY DESC
	213-0942-00	B711095		2	SCREW,TPG,TR:6-32 X 0.75,TYPE TT,PNH,STL (2246 1Y) END ATTACHING PARTS	0KB01	ORDER BY DESC
	352-0863-00	B700100	B715000	2	HOLDER,BATTERY:PLASTIC (2246 1Y)	65249	BH500
-15	337-3290-01	B100100	B113293	1	SHIELD,ELEC:TOP,W/CAUTION LABEL (2246 MOD A,2Y)	80009	337329001
	337-3681-01	B113294		1	SHIELD,ELEC:TOP (2246 MOD A,2Y)	80009	337368101
	337-3290-01	B700100	B711094	1	SHIELD,ELEC:TOP,W/CAUTION LABEL (2246 1Y)	80009	337329001
	337-3681-01	B711095		1	SHIELD,ELEC:TOP (2246 1Y)	80009	337368101
	334-4251-00			1	MARKER,IDENT:MKD CAUTION	07416	ORDER BY DESC
	131-1428-00			1	CONTACT,ELEC:GROUNDING,CU BE CD PL	TK1326	ORDER BY DESC
-16	361-1427-00			2	SPACER,CABLE:SILICONE	2K262	ORDER BY DESC
-17	----------			1	CIRCUIT BD ASSY:LVPS (SEE A18 REPL) ATTACHING PARTS		
-18	213-0882-00			6	SCREW,TPG,TR:6-32 X 0.437 TAPTITE,PNH,STL END ATTACHING PARTS	0KB01	ORDER BY DESC
	214-3796-00			2	CIRCUIT BOARD ASSY INCLUDES: .HEAT SINK,XSTR:ALUMINUM,TO-220;VERTICAL .ECB. MOUNT,TINNED TAB .(FOR A18Q2209 & A18Q2210)	30161	5968B
-19	204-0906-00			1	.BODY,FUSEHOLDER:3AG & 5 X 20MM FUSES	S3629	TYPE FAU 031.35
-20	200-2264-00			1	.CAP,FUSEHOLDER:3AG FUSES,	S3629	FEK 031 1666
-21	214-3821-00			2	.HEAT SINK,XSTR:PWR SPLY,GOLD .W/CHROMATE PL	13103	214-3821-00
-22	----------			1	.SWITCH,THRMSTC: (SEE A18S2202 REPL) ATTACHING PARTS		
-23	213-0882-00			2	.SCREW,TPG,TR:6-32 X 0.437 TAPTITE,PNH,STL END ATTACHING PARTS	0KB01	ORDER BY DESC
-24	----------			1	.TRANSISTOR: (SEE A18Q2201 REPL) ATTACHING PARTS		
-25	213-0882-00			1	.SCREW,TPG,TR:6-32 X 0.437 TAPTITE,PNH,STL END ATTACHING PARTS	0KB01	ORDER BY DESC

Fig. & Index No.	Tektronix Part No.	Serial No. Effective	Serial No. Dscont	Qty	12345 Name & Description	Mfr. Code	Mfr. Part No.
-26	----------			1	.TRANSISTOR: (SEE A18Q2214 REPL) ATTACHING PARTS		
-27	213-0882-00			1	.SCREW,TPG,TR:6-32 X 0.437 TAPTITE,PNH,STL END ATTACHING PARTS	0KB01	ORDER BY DESC
	344-0410-00	B700100	B710099	1	.CLIP,COIL SPRT:1 X 1.46,POLYCARBONATE .(2246 1Y)	0KBZ5	ORDER BY DESC
	344-0410-02	B710100		1	.CLIP,COIL SPRT:1.0 X 1.46,POLYCARBONATE .(2246 1Y)	TK1908	ORDER BY DESC
	344-0410-00	B100100	B103215	1	.CLIP,COIL SPRT:1 X 1.46,POLYCARBONATE .(2246 MOD A,2Y)	0KBZ5	ORDER BY DESC
	344-0410-02	B103216		1	.CLIP,COIL SPRT:1.0 X 1.46,POLYCARBONATE .(2246 MOD A,2Y)	TK1908	ORDER BY DESC
-28	342-0781-00			1	INSUL,PWR SPLY:POLYCARBONATE	2K262	PER TEK DRAWING
-29	----------			1	CIRCUIT BD ASSY:MAIN (SEE A10 REPL)		
	342-0324-00			6	.INSULATOR,DISK:TRANSISTOR,NYLON	13103	7717-5N-BLUE
-30	337-3342-02			2	.SHIELD,ELEC:HIGH VOLTAGE	TK1908	ORDER BY DESC
-31	337-3358-01			1	.SHIELD,ATTEN:FRONT,MAIN BD ATTACHING PARTS	TK1938	ORDER BY DESC
-32	211-0690-01			2	.SCREW,MACHINE:6-32 X 0.875 PNH,SST END ATTACHING PARTS	0KB01	ORDER BY DESC
-33	337-3279-00	B100100	B113516	1	.SHIELD,ATTEN:ALUMINUM .(2246 MOD A,2Y)	TK1938	ORDER BY DESC
	337-3358-02	B113517		1	.SHIELD,ATTEN:FRONT,MAIN BD .(2246 MOD A,2Y)	0J9P9	ORDER BY DESC
	337-3279-00	B700100	B711092	1	.SHIELD,ATTEN:ALUMINUM .(2246 1Y)	TK1938	ORDER BY DESC
	337-3358-02	B711093		1	.SHIELD,ATTEN:FRONT,MAIN BD .(2246 1Y) ATTACHING PARTS	0J9P9	ORDER BY DESC
-34	213-0882-00			10	.SCREW,TPG,TR:6-32 X 0.437 TAPTITE,PNH,STL END ATTACHING PARTS	0KB01	ORDER BY DESC
-35	344-0286-00			6	.CLIP,ELECTRICAL:FUSE,SPR BRS,	75915	102074
-35.1	337-0896-00	B110100		1	.PLATE,ELEC SHLD:B SWEEP CKT BD .(2246 MOD A,2Y)	0J260	ORDER BY DESC
	337-0896-00	B710100		1	.PLATE,ELEC SHLD:B SWEEP CKT BD .(2246 1Y)	0J260	ORDER BY DESC
-36	343-0003-00			1	.CLAMP,LOOP:0.25 ID,PLASTIC ATTACHING PARTS	06915	E4 CLEAR ROUND
-37	213-0882-00	B100100	B114168	1	.SCREW,TPG,TR:6-32 X 0.437 TAPTITE,PNH,STL .(2246 MOD A,2Y)	0KB01	ORDER BY DESC
	213-0942-00	B114169		1	.SCREW,TPG,TR:6-32 X 0.75,TYPE TT,PNH,STL .(2246 MOD A,2Y)	0KB01	ORDER BY DESC
	213-0882-00	B700100	B711094	1	.SCREW,TPG,TR:6-32 X 0.437 TAPTITE,PNH,STL .(2246 1Y)	0KB01	ORDER BY DESC
	213-0942-00	B711095		1	.SCREW,TPG,TR:6-32 X 0.75,TYPE TT,PNH,STL .(2246 1Y)	0KB01	ORDER BY DESC
-38	210-0949-00	B100100	B114168	1	.WASHER,FLAT:0.141 ID X 0.5 OD X 0.062,BRS .(2246 MOD A,2Y)	12327	ORDER BY DESC
	210-0949-00	B700100	B711094	1	.WASHER,FLAT:0.141 ID X 0.5 OD X 0.062,BRS .(2246 1Y) END ATTACHING PARTS	12327	ORDER BY DESC
-39	407-3416-00			1	.BRACKET,ATTEN:BRASS	0J9P9	ORDER BY DESC
-40	----------			4	.CONN,RCPT,ELEC:BNC(SEEA10J11,J12,J13,J14) ATTACHING PARTS		
-41	220-0497-00			4	.NUT,PLAIN,HEX:0.5-28 X 0.562 HEX,BRS CD PL	73743	ORDER BY DESC
-42	210-1039-00			4	.WASHER,LOCK:0.521 ID,INT,0.025 THK,SST END ATTACHING PARTS	0KB01	1224-02-00-0541

Fig. & Index No.	Tektronix Part No.	Serial No. Effective	Serial No. Dscont	Qty	12345 Name & Description	Mfr. Code	Mfr. Part No.
-43	131-3960-00	B100100	B110494	1	.CONTACT,ELEC:BNC GROUND,CU-BE ALLOY .(2246 MOD A,2Y)	TK2147	ORDER BY DESC
	131-4521-00	B110495		2	.CONTACT,ELEC:INPUT BNC GROUNDING,CU BE .ALLO.Y .(2246 MOD A,2Y)	TK1326	ORDER BY DESC
	131-3960-00	B700100	B710252	1	.CONTACT,ELEC:BNC GROUND,CU-BE ALLOY .(2246 1Y)	TK2147	ORDER BY DESC
	131-4521-00	B710253		2	.CONTACT,ELEC:INPUT BNC GROUNDING,CU BE .ALLO.Y .(2246 1Y)	TK1326	ORDER BY DESC
-44	214-3136-00			2	.HEAT SINK,XSTR:TO-5,ALUMINUM	13103	2228B
	358-0715-00			2	.BUSHING,SNAP:0.25 ID X 0.234 THK,NYLON, .0.375 OD	28520	2810
-45	384-1702-00			1	.EXTENSION SHAFT:9.97 L X 0.25,POLYMIDE	TK1908	PER TEK DRAWING
-46	----------			1	.CIRCUIT BD ASSY:CRT CONTROL (SEE A8 .REPL)		
-47	358-0715-00			1	..BUSHING,SNAP:0.25 ID X 0.234 THK,NYLON, ..0.375 OD	28520	2810
	384-1713-00			4	..EXTENSION SHAFT:0.918 L X 0.218 OD,PLASTIC	TK1908	ORDER BY DESC
-48	----------			1	.CIRCUIT BD ASSY:2 MILLIVOLT BANDWIDTH .(SEE A9 REPL - NO LONGER REPLACEABLE)		

Fig. & Index No.	Tektronix Part No.	Serial No. Effective	Dscont	Qty	12345	Name & Description	Mfr. Code	Mfr. Part No.

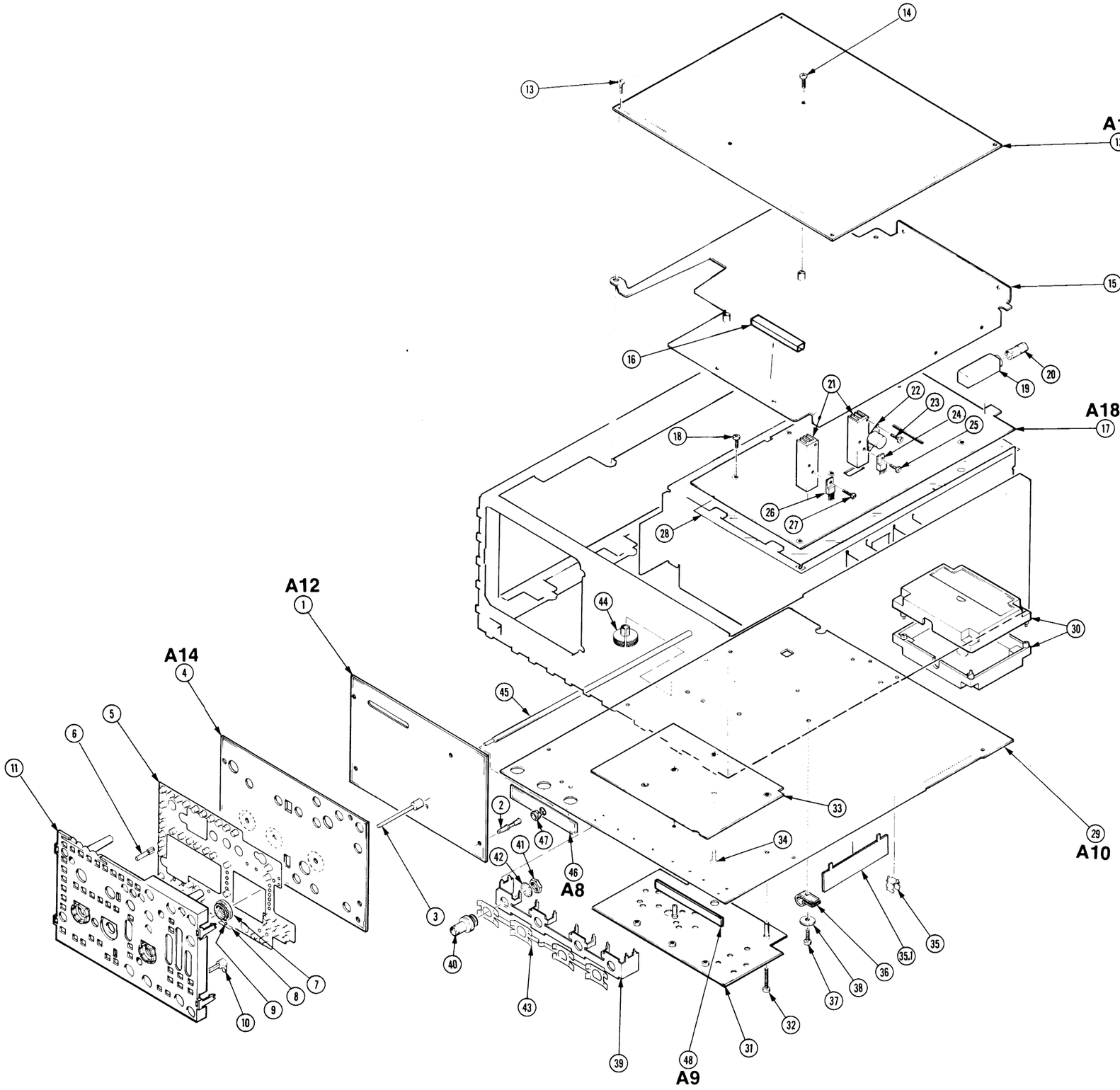
A16
A18
A12
A14
A8
A10
A9

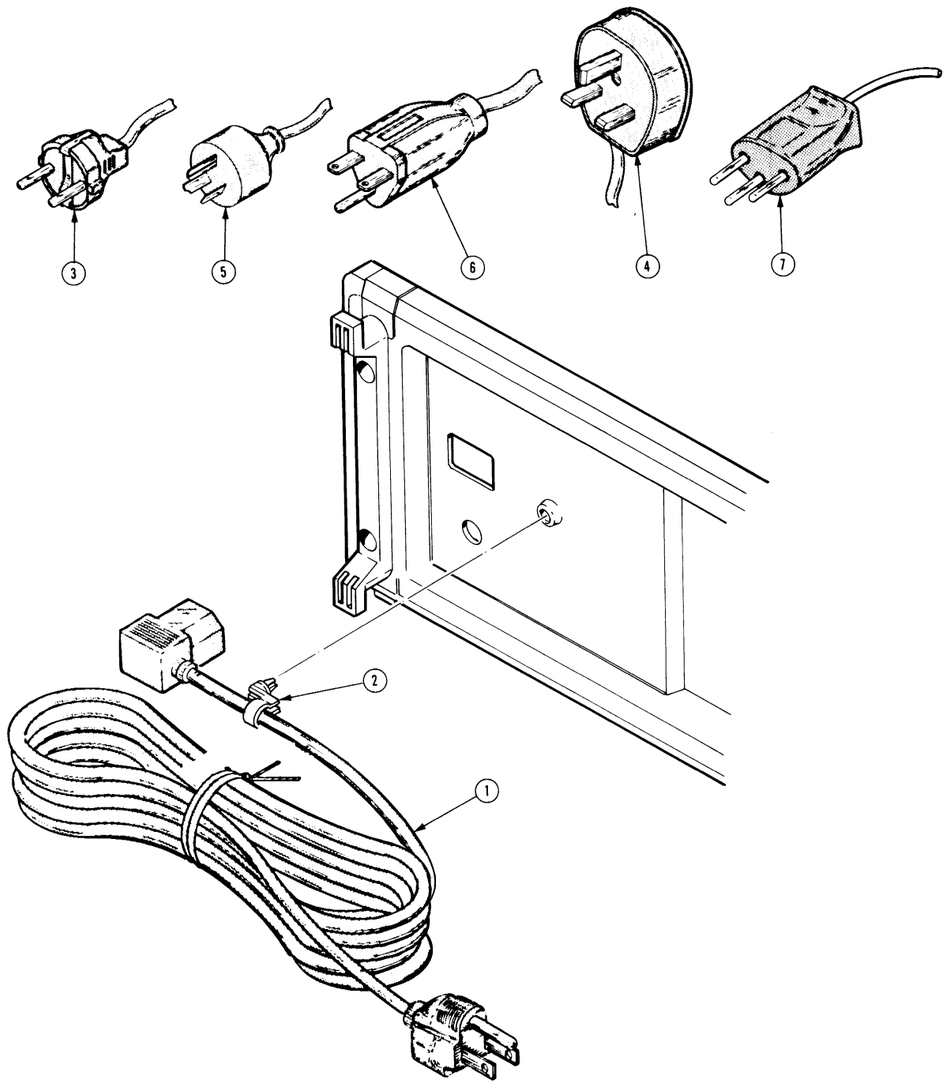

2246 1Y/2246 MOD A

Fig. & Index No.	Tektronix Part No.	Serial No. Effective	Serial No. Dscont	Qty	12345 Name & Description	Mfr. Code	Mfr. Part No.
4-					STANDARD ACCESSORIES		
-1	161-0230-01			1	CABLE ASSY,PWR,:3,18 AWG,92.0 L (STANDARD ONLY)	TK2432	ORDER BY DESC
-2	343-1213-00			1	CLAMP,PWR CORD:POLYMIDE	TK1163	ORDER BY DESC
	020-0859-00			1	COMPONENT KIT:EUROPEAN	80009	020085900
-3	161-0104-06			1	.CABLE ASSY,PWR,:3 X 0.75MM SQ,220V,98.0 L	S3109	VIIGSOPO-HO5VVF
					.(OPTION A1 - EUROPEAN)		
	343-0170-00			1	.RTNR,CA TO CA:U/W 0.25 OD CABLES	0JR05	ORDER BY DESC
	020-0860-00			1	COMPONENT KIT:UNITED KINGDOM	80009	020086000
-4	161-0104-07			1	.CABLE ASSY,PWR,:3 X 0.75MM SQ,240V,98.0 L	S3109	ORDER BY DESC
					.(OPTION A2 - UNITED KINGDOM)		
	343-0170-00			1	.RTNR,CA TO CA:U/W 0.25 OD CABLES	0JR05	ORDER BY DESC
	020-0861-00			1	COMPONENT KIT:AUSTRALIAN	80009	020086100
-5	161-0104-05			1	.CABLE ASSY,PWR,:3,18 AWG,240V,98.0 L	S3109	SAA/3-OD3CCFC3X
					.(OPTION A3 - AUSTRALIAN)		
	343-0170-00			1	.RTNR,CA TO CA:U/W 0.25 OD CABLES	0JR05	ORDER BY DESC
	020-0862-00			1	COMPONENT KIT:NORTH AMERICAN	80009	020086200
-6	161-0104-08			1	.CABLE ASSY,PWR,:3,18 AWG,240V,98.0 L	70903	ORDER BY DESC
					.(OPTION A4 - NORTH AMERICAN)		
	343-0170-00			1	.RTNR,CA TO CA:U/W 0.25 OD CABLES	0JR05	ORDER BY DESC
	020-0863-00			1	COMPONENT KIT:SWISS	80009	020086300
-7	161-0167-00			1	.CABLE ASSY,PWR,:3.0 X 0.75,6A,240V,2.5M L	S3109	ORDER BY DESC
					.(OPTION A5 - SWITZERLAND)		
	343-0170-00			1	.RTNR,CA TO CA:U/W 0.25 OD CABLES	0JR05	ORDER BY DESC
	----------			1	ACCESSORY PKG:TWO P6109 PROBES,ONE		
				1	P6101A PROBE,W/ACCESSORIES		
	159-0023-00			1	FUSE,CARTRIDGE:3AG,2A,250V,SLOW BLOW	71400	MDX2
	016-0857-00			1	ACCESSORY POUCH:W/PLATE	80009	016085700
	200-3232-00			1	COVER,FRONT:ABS	0JRZ2	ORDER BY DESC
	070-7061-00			1	MANUAL,TECH:OPERATOR	TK1908	PER TEK DRAWING
					(2246 MOD A,2Y)	80009	070706100
	070-7061-00			2	MANUAL,TECH:OPERATOR		
					(2246 1Y)	80009	070706100
	070-7062-00			2	MANUAL,TECH:SERVICE		
					(2246 1Y)	80009	070706200
	070-7063-00			1	CARD,INFO:REFERENCE		
					(2246 MOD A,2Y)	80009	070706300
	070-7063-00			2	CARD,INFO:REFERENCE		
					(2246 1Y)	80009	070706300
					OPTIONAL ACCESSORIES		
	070-7062-00			1	MANUAL,TECH:SERVICE		
					(2246 MOD A,2Y)	80009	070706200

Fig. & Index No.	Tektronix Part No.	Serial No. Effective	Dscont	Qty	12345	Name & Description	Mfr. Code	Mfr. Part No.

MANUAL CHANGE INFORMATION

At Tektronix, we continually strive to keep up with latest electronic developments by adding circuit and component improvements to our instruments as soon as they are developed and tested.

Sometimes, due to printing and shipping requirements, we can't get these changes immediately into printed manuals. Hence, your manual may contain new change information on following pages.

A single change may affect several sections. Since the change information sheets are carried in the manual until all changes are permanently entered, some duplication may occur. If no such change pages appear following this page, your manual is correct as printed.

Tektronix®
COMMITTED TO EXCELLENCE

MANUAL CHANGE INFORMATION

Date: 5-13-91 Change Reference: M73903

Product: 2246 1Y and 2246 MOD A SERVICE MANUAL Manual Part Number: 070-7062-00

DESCRIPTION Product Group 46

EFFECTIVE SERIAL NUMBER: B715003 (1Y, 2R)
B120200 (MOD A, 2Y, 9X)

REPLACEABLE ELECTRICAL PARTS LIST CHANGES

CHANGE TO:

A10R113	313-1750-00	RES, FXD FILM:75 OHM,5%,0.2W
A10R123	313-1750-00	RES, FXD FILM:75 OHM,5%,0.2W

DIAGRAM CHANGES

DIAGRAM 1 VERTICAL INPUTS

Change the value of resistor R113 (location 1G) to 75 Ω.
Change the value of resistor R123 (location 3G) to 75 Ω.

Tektronix®
COMMITTED TO EXCELLENCE

MANUAL CHANGE INFORMATION

Date: 5-15-91 Change Reference: M74238

Product: 2246 1Y & 2246 MOD A SERVICE MANUAL Manual Part Number: 070-7062-00

DESCRIPTION Product Group 46

EFFECTIVE SERIAL NUMBER: B715476 (2246 1Y, 2R)
B121427 (2246 MOD A, 2Y, 9X)

REPLACEABLE ELECTRICAL PARTS LIST CHANGES

CHANGE TO:

A18L2206	108-1501-00	INDUCTOR,FIXED:100UH,10%,1.8A

DIAGRAM **POWER SUPPLY**

Change L2206 (location 6K) to 100μH.

Tektronix®
COMMITTED TO EXCELLENCE

MANUAL CHANGE INFORMATION

Date: 9-23-91 Change Reference: C11/0991

Product: 2246ModA/1Y SERVICE Manual Part Number: 070-7062-00

DESCRIPTION Product Group 46

EFFECTIVE ALL SERIAL NUMBERS

TEXT CHANGES

Page 4-25 Step 2e. DC Volts Normal Mode Rejection Ratio

Change spec to ± 0.018V

Tektronix®
COMMITTED TO EXCELLENCE

MANUAL CHANGE INFORMATION

Date: 9-25-91 Change Reference: C12/0991

Product: 2246 Mod A / 1Y SERVICE Manual Part Number: 070-7062-00

DESCRIPTION Product Group 46

EFFECTIVE ALL SERIAL NUMBERS

TEXT CHANGES

Page 6-39 Removal and Replacement Instructions — "WARNING"

The component number for the Power Supply/Main Board interface connector mentioned in the warning was incorrectly identified as J1024.
The correct component number is J1204.

The correct warning statement is given below:

WARNING

Potentially dangerous voltages exist at several points throughout this instrument. If it is operated with the cabinet removed, do not touch exposed connections or components. Before replacing parts or cleaning, disconnect the ac power source from the instrument and check that the line rectifier filter capacitors have discharged. Also check the low voltages at the Power Supply/Main Board interface connector (J1204). If any of the supply voltage or line voltage filter capacitors remain charged for more than 20 seconds, discharge them to ground through a 1 kΩ, 5 or 6 watt resistor.