FOR SERVICING AND SPARES ENQUIRIES
SEE THE INFORMATION AT START OF CHAPTER 5.

TEKTRONIX U.K. LTD.
36-38, Cold Harbour Lane,
Harpenden,
Hertfordshire,
England.
Telephone: Harpenden 63141
Telex: 25559

OSCILLOSCOPE
TYPE D755
OPTION 66
(XT605)

INSTRUCTION MANUAL

070-1487-10

Issue 4
March 1980

Printed in England by D & H NEWMAN LTD, 29 Harcourt Street, London W1. 01-262-6356

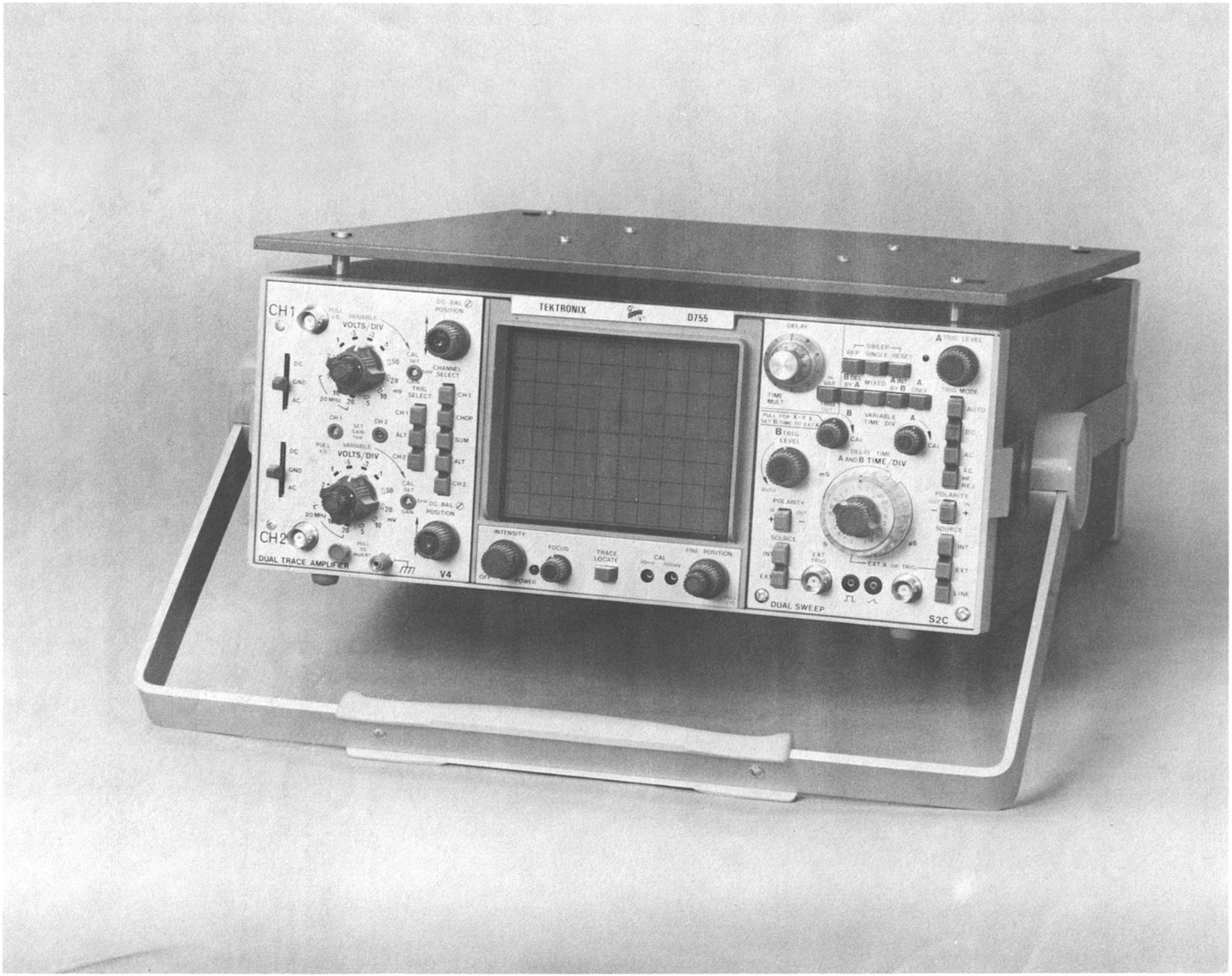
TEKTRONIX
D755
CH1
VOLTS/DIV
DC. BAL POSITION
CHANNEL SELECT
TRIG SELECT
CH1
CHOP
SUM
ALT
CH2
CH2
DUAL TRACE AMPLIFIER
V4
INTENSITY
FOCUS
TRACE LOCATE
CAL
FINE POSITION
DELAY
SWEEP
REP
SINGLE
RESET
A TRIG LEVEL
TIME MULT
TRIG MODE
AUTO
B TRIG LEVEL
VARIABLE TIME DIV
A AND B TIME/DIV
POLARITY
SOURCE
EXT X OR TRIG
DUAL SWEEP
S2C

INTRODUCTION

The D755 is an all solid state oscilloscope. An 8 x 10 div. CRT provides a bright and clear display. The horizontal amplifier provides a delayed sweep facility to permit close examination of any part of a complex waveform and allows for an accurate time measurement of the input signals. The vertical amplifier, has a dual trace facility, and displays either channel separately, adds channels algebraically, alternates or chops between channels.

The design of this instrument is subject to continuous development and improvement, consequently this instrument may incorporate minor changes in detail from the information contained herein, this would, in the main, affect the Components List and Circuit Diagrams. The reader should pay particular attention to the notes at the beginning of Chapter 5.

NOTICE TO OWNER

To obviate the risk of damage during transit and facilitate packaging, the owner is requested to remove the power supply plug and NOT send the following items unless they are suspect, should this Instrument be returned for servicing.

Manual

Probes

Power Supply Lead

Plug Assemblies

CONTENTS

CHAPTER 1

SPECIFICATION

Although this instrument is functional a few seconds after switching on, a period of at least 20 minutes should be allowed to elapse before checking to full specification.

1.0 VERTICAL AMPLIFIER

1.1 OPERATING MODE

Channel 1
Channel 2 (normal or inverted)
Channels 1 & 2
- Summed
- Alternate
- Chopped (at 350 kHz)

1.2 3 dB BANDWIDTH

	X 1	X 5
5 mV – 20 V/div	50 MHz	15 MHz
Risetime	7 ns	23 ns
Sensitivity	5 mV to 20 V/div	1 mV to 4 V/div

1.3 DEFLECTION FACTORS

Calibrated (12 ranges 1, 2 & 5 sequence) — 5 mV – 20 V/div ± 3% (X1)
1 mV – 4 V/div ± 3% (X 5)

1.4 INPUT IMPEDANCE — 1 MΩ, 29 pF in parallel approx.

1.5 CHANNEL – CHANNEL

Breakthrough — > 34 dB up to 50 MHz

2.0 HORIZONTAL AMPLIFIER

2.1 OPERATING MODE

'A' Sweep — Repetitive or Single Shot
'A' Intensified by 'B'
'A' and 'B' Mixed
'B' Delayed by 'A'
Delayed 'B'
- Variable
- Triggered

2.2 TRIGGER MODE

	'A'	'B'
Level Auto	40 Hz – 50 MHz Bright line	free-run between 20 & 50 Hz
DC AC H.F. reject	D.C. – 50 MHz 10 Hz – 50 MHz 10 Hz – 2.0 MHz at min. input levels	AC Coupled only, 3 Hz – 10 MHz
Sensitivity Internal L.F. 10 MHz 50 MHz	 0.2 divisions 0.2 divisions 1 division	 0.4 divisions 1. division
External L.F. 10 MHz 50 MHz	 300 mV 300 mV 500 mV	 500 mV 1 V
Polarity + –	 from positive signal edge from negative signal edge	
Source Internal External	 from vertical amplifier from external source	
Line	from power supply transformer secondary	

2.3 SWEEP	'A'	'B'
Range	2s – 100 ns/div	1s – 100 ns/div
Variable (time)	>2.5 to 1	
X 10 Speed	10 ns/div max.	
'A' & 'B' Mixed	The 'A' sweep as Time/Div, but the mixed portion sweep speed is calculated from speed $\left[\frac{B}{1 + B/A}\right]$	
Accuracy		
X 1	± 3%	
X 10	± 6%	
'A' & 'B' Mixed	The 'A' sweep accuracy is ± 3%. The mixed portion accuracy is ± 3% (B/A x 3) %.	
Sweep Output	>8V pp into 1 kΩ.	
2.4 EXT		
Sensitivity		
X 1	400 mV/div ± 15%	
X 10	40 mV/div ± 20%	
Bandwidth	>1 MHz	
2.5 DELAY TIME MULTIPLIER		
Accuracy		
Absolute	± 1% of Total Delay + 450 ns max.	excluding sweep accuracy
Incremental	± 1% of Total Delay	
2.6 X – Y	CH1 to X CH2 to Y	phase difference between axes <1° at 50 kHz

3.0 CATHODE RAY TUBE (CRT)

Display area	8 x 10 div (each div 1.0 cm)
Phosphor Standard	P31
Overall accelerating potential	15 kV

4.0 FRONT PANEL OUTPUTS

Calibrator, peak to peak	30 mV, 300 mV or 3 mA at 1 kHz
Accuracy	
Voltage	± 1%
Frequency	± 20%
Current	± 1%

5.0 Z MOD

Full blanking sensitivity	+ 20 V approx.
Input impedance	10 kΩ and 20 pF approx.
Frequency response	DC – 5 MHz approx.

6.0 GENERAL

6.1 POWER REQUIREMENTS	
Voltage	100 – 125 V in 5 V steps 200 – 250 V in 10 V steps
Frequency	48 – 400 Hz
Consumption	50 VA
6.2 SIZE	
Height	136 mm
Width	380 mm
Depth without front cover	470 mm
Depth with front cover	480 mm
Depth with extended handle	555 mm
6.3 WEIGHT	13.5 kg
6.4 COOLING	Convection
6.5 TEMPERATURE LIMITS, ambient	
Operating	–5 to +40°C approx.
Non-operating	–25 to +70°C approx.

It is recommended that the calibration be checked periodically as changes due to temperature, humidity and long-term ageing could affect absolute measurement accuracy. This is particularly important before making critical measurements.

CHAPTER 2
OPERATING INSTRUCTIONS

2.1 FUNCTION OF CONTROLS AND CONNECTORS

Controls are situated on the front panel except where otherwise specified.

2.2 CRT

INTENSITY	varies the intensity of the display and serves as the power supply ON–OFF switch.
FOCUS	controls the definition of the display.
ASTIG.	a preset situated on the rear panel, used in conjunction with FOCUS for achieving the best overall definition.
TRACE LOCATE	when pressed brings the trace on to the screen and free-runs A TIMEBASE.
POSITION	varies the position of the trace in the horizontal axis.
FINE	is a fine horizontal position control; when pulled magnifies trace 10 times in the horizontal axis; sweep calibrations must by divided by 10.
TRACE ROTATION	preset situated on the rear panel. Rotates the trace about the horizontal axis of the CRT and used to align the trace in the horizontal axis.

2.3 HORIZONTAL

2.3.1 SWEEP

A & B	
TIME/DIV	controls the speed of the respective sweeps. The sweep rates indicated are only valid if VARIABLE is fully clockwise and FINE is not pulled out.
VARIABLE	provides continuously variable sweep speed adjustment between adjacent fixed calibrated speed ranges.
REP	provides continuous repetitive sweeps.
SINGLE SHOT	a sweep occurs upon application of trigger signal.
RESET	Sets TIMEBASE in 'Wait' condition ready for next trigger signal.
DELAY TIME MULT	varies the point on the 'A' sweep at which the 'B' sweep starts. Used in conjunction with 'A & B Mixed', 'A INT BY B' or 'B DEL BY A'. Note: For minimum delay jitter TRIG mode should be used.
VAR	provides continuously a variable delay for the start of the B sweep set by the D.T.M.
TRIG	starts the B sweep on receipt of the next suitable triggering signal, after the point set by the DELAY TIME MULT.
A ONLY	displays A sweep, B sweep is disabled.
A INT BY B	displays the A sweep with that part of trace covered by B intensified.
MIXED	simultaneously displays both A and B sweeps, but B sweep calibration is affected.
B DEL BY A	displays the delayed B sweep only.
B VARIABLE TIME/DIV. X–Y OPERATION	A dual function control is provided. In the normal ('IN') position it enables speeds between that indicated by the TIME/DIV switch and the next lower speed to be selected. The X–Y ('OUT') position enables Y channel trigger signals from the Y amplifier TRIG SELECT switch to be displayed in the X direction on the CRT. It is used in conjunction with setting the 'B' TIME/DIV control to EXT X.

2.3.2 TRIGGER

A TRIG LEVEL	selects that point on the signal waveform at which the A sweep starts.
TRIG MODE	
AUTO	provides a bright line auto, allowing the A timebase to free run until a signal is applied. LEVEL range is reduced to approximately 1 division.
AC or DC	relate to the coupling of the trigger circuit, and EXT X socket. For very low input frequencies DC should be selected.
AC HF REJ	progressively rejects high-frequency signals, permitting the trigger to respond to low-frequency components of the triggering signal.
POLARITY ±	selects triggering from the positive or negative-going slope of a waveform.
SOURCE	
INT and EXT	enable the sweep to be triggered either, internally from the vertical amplifier, or externally.
LINE	provides trigger signal at the power supply frequency.
B TRIG LEVEL	selects that point on the signal waveform at which the B sweep starts. In the AUTO position, the trigger oscillates at a low repetition rate in the absence of a triggering signal. When a suitable signal is applied, the circuit is automatically triggered at the mean level of the input waveform.
POLARITY, SOURCE	See above

2.4 VERTICAL

DC-GND-AC	selects the input signal coupling. In the DC position, the signal from the CH1, CH2 connector is directly coupled to the attenuator. In the AC position a capacitor is inserted in series. In the GND position the input to the attenuator is grounded; this position enables the 0 V D.C. level of a trace to be ascertained.
VOLTS/DIV	provides twelve steps of attenuation of each channel's input signal. Calibrated sensitivities are only valid when VARIABLE is fully clockwise.
SET GAIN	
5 mV	a preset; adjusts X1 GAIN calibration.
1 mV	a preset; adjusts X5 GAIN calibration.
	Note: VARIABLE should be fully clockwise.

VARIABLE — enables all deflection sensitivities between that selected by the VOLTS/DIV switch and the next below to be covered. The controls must be fully clockwise for a calibrated sensitivity; when pulled magnifies sensitivity 5 times in the vertical axis.

INVERT — the setting of this button determines whether the CH2 signal is displayed in the same polarity as the input signal or inverted. The inverted setting may be used to display the difference between two signals in the SUM mode.

TRIG SELECT — selects triggering from either channel or the display.

POSITION — moves the respective traces in the vertical axis.

DC BAL — a preset adjustment to eliminate trace movement when the respective PULL X5 control is operated.

CHANNEL SELECT

CH1 — selects Channel 1.

CHOP — the channels are alternately switched on and off at a frequency of about 350 kHz; this mode is suitable for slower sweep speeds.

SUM — the display is the addition of the individual signals:
If INVERT is pulled, the resultant display is the difference between two input signals.

ALT — each channel is alternately displayed for the duration of a sweep; the ALT mode is preferable at higher sweep speeds.

CH2 — selects Channel 2.

2.5 CONNECTORS

2.5.1 INPUTS

CH1/CH2 — BNC sockets connect the signal to be viewed to the respective vertical amplifier.

A EXT TRIG & EXT X — is the right hand BNC connector on the front panel. This enables either external triggering signals to be applied by selecting the adjacent EXT button or in the EXT position of the 'B' TIME/DIV switch, provides the EXT X input. The connector is DC or AC coupled to both trigger and horizontal amplifier circuits.
Input resistance is 100 kΩ.

B EXT TRIG — a separate BNC connector, enables an external trigger signal to be connected to the B Timebase.

Z MOD — an input socket situated on the rear panel DC coupled via Z mod amp. to the CRT grid. A negative-going signal is necessary to intensify the trace while a positive-going signal will blank it.

2.5.2 OUTPUTS

SAWTOOTH — provides a positive-going ramp waveform when the A sweep is running. A recurring sawtooth is produced when AUTO is selected. The resistance of an applied load should exceed 47 kΩ to avoid loading the sweep generator.

GATE OUT — provides a fast-edged positive-going rectangular pulse lasting for the duration of the sweep.

CAL — output sockets provide a 1 kHz waveform for checking the calibrations of the vertical channels and setting up probes. The two outputs provide 300 mV and 30 mV of a 1 kHz (approx.) squarewave; when linked a 3 mA peak to peak current passes.

⏚ — terminal is connected to the chassis of the instrument.

2.6 PRE-OPERATIONAL CHECKS

2.6.1 SUPPLY

Check the following:

1. Rear voltage-selector plug is indicating the local supply voltage or nearest value.

2. Fuse fitted is a 2 A for 100–125 V operation or 1 A for 200–250 V.

Note: The 3-core supply lead is colour coded as follows:

LINE	NEUTRAL	EARTH (Chassis)
Brown or Black	Blue White	Green/Yellow Green

2.6.2 Set controls as follows:

1. CRT

INTENSITY	Central
FOCUS	Central
TRACE ROTATION	As set

2. HORIZONTAL

SWEEP	REP
A ONLY	Depressed
TIME/DIV	5 ms
VARIABLE	Fully clockwise
TRIG MODE	Auto
POLARITY	Depressed
SOURCE	INT

3. VERTICAL

TRIG SELECT	CH1
CHANNEL SELECT	CH1
POSITION	Central
VOLTS/DIV	5 mV
INVERT	Depressed
VARIABLE	Fully clockwise, pushed in
DC-GND-AC	GND
Input connection	CH1 INPUT

2.7 OPERATION

1. Plug into the supply; turn INTENSITY clockwise – POWER on.

2. Allow a few minutes for warm up then adjust CRT and POSITION controls for a display.

3. Adjust TRACE ROTATION, if necessary to align trace horizontally.

4. Connect the CAL 30 mV to INPUT via co-axial lead.

5. Set DC-GND-AC to DC.

6. Rotate LEVEL anti-clockwise to lock display.

7. Check amplitude of 6 divisions.

The Power Cord should be secured, by the nuts and screws provided, to comply with local legislation.

CHAPTER 3
CIRCUIT DESCRIPTION

3.1 GENERAL

3.1.1 This instrument comprises three main assemblies: Display, Vertical and Sweep Units. The descriptions are given below. To facilitate references made in this chapter to the circuit diagrams, a colour code has been adopted relating the figure numbers with that section of chapter 6, to which the figure number refers.

3.1.2 The interfaces, reference Figure 1 (White), between the display unit and amplifiers are two 16-way edge connectors. The sockets are mounted on PC147, situated in the display unit and the mating plugs are a part of PC152 and PC188 in the Vertical and Sweep amplifiers respectively. These provide the inter-connections of Vertical (Input), Sweep and Trigger amplifiers, Vertical output and power etc. necessary for the function of the instrument.

3.1.3 The Vertical system comprises two amplifiers, which are switched in various ways to feed a main amplifier in the display unit.

3.1.4 The dual sweep system generates precise timing currents which, when applied to the Sweep amplifier and the bright-up amplifier, enable the CRT to display a highly accurate sweep controlled display. The system comprises a master sweep current generator, known as the 'A' sweep and a subsidiary sweep current generator, the 'B' sweep. Both incorporate an integral bright-up current generator. Individual trigger amplifiers are able to accept internal or external trigger signals. These control the start point of each sweep, also a comprehensive switching system enables a wide variety of display modes to be selected by the user.

3.2 ATTENUATORS

3.2.1 The input attenuators, reference Figure 1 (Yellow) are simple capacity compensated L type sections which are switched singly or in cascade to obtain the correct attenuation. The sect ons on the two rear wafers of the attenuator are the ÷1, ÷2 and ÷4, on the front two wafers ÷10, ÷100 and ÷1000. The input impedance of the attenuator is maintained at 1 MΩ and 29 pF on all positions. The attenuators are identical electrically.

The DC-GND-AC switches select either a through connection on DC, a capacitor coupled connection via a 0.1 μF 400 V capacitor on AC or a GND connection with the signal path input open-circuited and the amplifier input grounded.

3.3 VERTICAL AMPLIFIER (Input)

3.3.1 The circuits of channel 1 (CH1) and channel 2 (CH2) are very similar and situated in the Vertical (Input) assembly.

CH1 is described below with reference to Figure 2 (Yellow) except where reference is made to CH2. TR601A and TR601B are FETS used as source followers which drive TR605A and TR605B, a phase-splitting stage. These are a long-tailed pair with the 1 mV and 5 mV SET CAL potentiometers, R696 and R625, in the emitter circuit. DC BAL, R601, is adjusted to eliminate trace movement when the gain is switched; the collectors are connected to a shunt feedback stage, TR609 and TR611 via the variable VOLTS/DIV circuitry. The input impedance of this stage is very low and its total input resistance, including the 91 Ω resistors, R646 and R647, is approximately 100 Ω per side. When the variable VOLTS/DIV potentiometer is at maximum resistance, the attenuation of the signal is small. When at minimum, however, the resistance is approximately 51 Ω per side. The attenuation of the signal is now approx. 3. This covers the gaps in the 1–2–5 sequence in the attenuators. The shift signal is inserted at the bases of TR609 and TR611, after the VARIABLE control. This ensures that the same amount of shift is obtained regardless of VARIABLE setting.

3.3.2 The emitter followers, TR614 and TR615, provide a low output impedance for the trigger pick-off and a low capacity loading for the shunt feedback stage. The CH1 trigger signal is fed to the bases of TR756 and TR757, which are a long-tailed pair; then from their collectors, via a diode matrix to a trigger interface Pins 7 and 10 on SK602. The diode matrix allows the trigger signals to be switched from CH1, CH2 or the displayed signal merely by changing DC levels; +24 V switches the channel on and −24 V switches the channel off. The display or ALT trigger pick-off circuitry is on the display unit mother board PC147. TR618 and TR619 are series feedback stages with HF peaking between their emitters. The voltage swing at their bases is approximately 22 mV/div/side or 44 mV/div push-pull. Their collectors feed the display unit interface via the channel diode matrix.

3.3.3 When CH1 is selected, the voltage at eyelet 152/24 is taken to +11 V and at eyelet 152/23 to +15 V. This reverse biases D605, D606, D611 and D613, and switches on D612, D609, D607 and D608. The signal current now passes through D609 and D612. The interface voltage level is approximately +12.7 V; the current sensitivity approximately 0.27 mA/div/side. This gives a voltage swing of 25 mV/div/side as the input impedance of the following stage is 100 Ω/side approximately.

3.3.4 When CH2 is selected D612, D609, D607 and D608 are reverse biassed and D605, D606, D611 and D613 are switched on. The signal current now flows in D611 and D613. Pin 152/24 is at +15 V and 152/23 +11 V.

On CHOP, reference Figure 3 (Yellow), these levels are switched at approximately 350 kHz, on ALT at sweep repetition rate. The switching signals are obtained from TR751 and TR753 collectors, eyelets 153/14 and 153/17. The switching levels are +11 V and +15 V. TR751 controls CH2 and TR755 controls CH1. The collectors and bases are cross-coupled to ensure bistable operation. When CH1 is selected; the emitter of TR751 is open-circuited switching it off and TR753 on. The reverse happens when CH2 is selected.

3.3.5 When SUM is selected, both transistors are saturated and R771 is switched into circuit to reduce the current drain from the supply.

3.3.6 On ALT, the circuit operates as a bistable, triggered by negative pulses from the sweep circuit. D751 and D753 are the steering diodes and C750 and C754 the input capacitors. The cross-coupling resistors R756 and R761 are non-symmetrical to ensure that the circuit does not achieve a third stable state with both collectors resting at +13.5 V due to low common mode gain.

3.3.7 On CHOP, the circuit operates as an emitter-coupled multivibrator. R757, C751, C752 and R762 form the timing circuit and C753 provides a blanking pulse output at twice the chop frequency. TR752 is the blanking amplifier and shaper giving a current pulse via D752 and Pin 3 on SK602 to D606, reference Figure 1 (White).

3.3.8 CH2 has an invert facility, a 2-pole change-over switch, S601, which re-routes the signal current when the invert knob is pulled. On CH1, R703 is used to eliminate trace movement, when operating the VARIABLE. On CH2, R704 is used to equalize the currents through the two switch paths, so that no movement occurs on normal/invert operation, R645 provides the balance controls for the VARIABLE movement and R602, the balance control for gain switching movement.

3.3.9 The CH2 trigger signal is fed to the bases of TR758 and TR759, then via a diode matrix, and Pins 7 and 10 on SK602 to the switching diodes D601, D602, D603 and D604, reference Figure 1 (White).

3.4 VERTICAL AMPLIFIER (Final stage)

3.4.1 The signal from input vertical amplifier is carried, via Pins 5 and 13 on SK602 to the delay line drive amplifier. TR603 and TR604, reference Figure 1 (White). To ensure the interface always has the same sensitivity, the gain is set by the series elements R611, R612 and the shunt elements R608, R609. The total gain adjustment is approximately 18%. This enables the input sensitivity to be set to 0.27 mA/div ± 5%.

3.4.2 The drive amplifier is a voltage feedback stage giving low input and output impedances i.e. 9 Ω and 11 Ω approx. The resistors, R629 and R628 are used to raise the output impedance of this stage to match the delay line, which is 93 Ω/side. The feedback resistors are split to enable the delay line compensation circuits C607, R617, C608 and R621 to be inserted, these provide medium frequency peaking. The ALT trigger signal is taken from the low impedance output of this stage and fed through R626 and R627 to the ALT trigger amplifier, TR601 and TR602. Selection of ALT is achieved by a D.C. Control voltage switching the diodes D601, D602, D603 and D604; +24 V at Pin 6 on SK602 selects ALT and −24 V switches it off. The trigger signal is gated with that from Pins 7 and 10 on SK602 and fed to the Trigger amplifier via Pins 11 and 12 on SK601.

3.4.3 The Sum balance control, R614, is in circuit only when SUM is selected on the Vertical amplifier. When this occurs +24 V is applied to Pin 14 on SK602 which switches on D605 and supplies the extra current needed in the SUM mode through R613, R614 and R615. When SUM is not selected the control line is at earth potential.

3.4.4 The delay line is a twin helix type sheathed with braid having a total delay of 140 ns, terminated on PC151 by R701, R703 and L701. The two resistors are in parallel with the input resistance of the next stage and give a terminating resistance of 186 Ω. L701 is a partial compensation for the input capacity of TR701 and TR702, which is adjusted for minimum delay line termination ripple. The following stage is a long tailed pair, TR701 and TR702, with a gain of 2 and peaking between the emitters. R711 and C703 are delay line compensation and C704 high frequency peaking.

The output stage is a cascode comprising TR703, TR704, TR705 and TR706. It has a gain of approximately 15 and runs at a current of 50 mA/side, gain being determined by R724, R725 and R718. The components between the emitters of TR705 and TR706, which drive the Y plates of the CRT, R719, C706, C708 and R721, provide thermal compensation. Zener diodes, D702 and D703, prevent TR703 and TR704 bottoming at extremes of shift and signal.

3.4.5 A portion of the output stage current is used to provide trace rotation. L702 is the trace rotation coil and R727 the preset control on the back panel of the oscilloscope. Geometry control is provided by R634 which is mounted on PC147.

3.5 'A' TRIGGER AMPLIFIER

3.5.1 This amplifier, reference Figure 1 (Pink) can accept balanced trigger signals originating in the vertical amplifier system or single-ended external signals via a panel co-axial socket SK1.

Balanced signals are fed into the trigger amplifier, via a 150 Ω matched transmission line from the edge connexion part of PC135. They connect to the balanced trigger amplifier, TR3 and TR4, via DC blocking capacitors, C3, and C4, the INT/EXT, switch, S1, the POLARITY switch, S2, and terminating resistors, R13 and R31.

3.5.2 TR3 and TR4, form a long-tailed pair amplifier. When S3d is set to H.F. REJ., the amplifier gain commences to fall at frequencies above 2.0 MHz, making the circuit progressively unresponsive to H.F. signals. 'A' LEVEL, R22, alters the currents in TR3 and TR4 permitting the selection of any point on the trigger signal to be set at D.C. level, where the Schmitt amplifier TR6 and TR7 switches over.

In the AUTO position, R22 is shunted by D4, R19, R29, D6 and R21 is connected in series with the wiper. The range of R22 is drastically reduced, thus enabling accurate setting of the trigger point for low amplitude signals. R26 is adjusted to give the correct output D.C. level with the TRIG LEVEL control in mid-position.

3.5.3 Following TR4, is a frequency compensated shunt feedback stage formed by TR5, R32, R33 and C13. R32 and C13 compensate for R23 and C11 in the emitter of TR3 and TR4 and give a flat frequency response but limit the output voltage swing at frequencies above 2 MHz. It is D.C. coupled via parasitic stoppers, R35 and C15 to the Schmitt trigger circuit TR6, TR7.

Normal dividing down action takes place between 2 and 10 MHz depending upon input amplitude. Two outputs are provided:—

(1) Fast negative spikes via C61 and D61 to the bright line monostable TR61 and TR62.
(2) Fast positive spikes via C64, L61 and D64 to the A sweep gating bistable TR63 and TR64.

3.5.4 Unbalanced trigger signals, originating from any external source, are applied to the sweep unit via a co-axial socket SK1 at an input impedance of 100 kΩ. The trigger amplifier is responsive to both D.C. and A.C. signals. By operation of S3 the D.C. component of an A.C. signal to the peak value of 250 V may be blocked. TR1 and TR2 form a single-ended shunt feedback pair, the output of which may be directed into the trigger amplifier or the horizontal amplifier in the display unit. This latter connexion is made when the 'B' TIME/DIV switch, reference Figure 3 (Pink), S251, is set to the extreme anti-clockwise position. In all other positions TR1 and TR2 output is connected to the trigger amplifier via S1b, S1a and S2.

R7 enables D.C. adjustment of the external signal level to the same as that of the internal signals. TR2 supply voltage is derived from a twin zener regulator, D3 and D8, fed from the main +24 V line via R12.

3.5.5 In the EXT X position of the 'B' TIME/DIV switch, TR3 and TR4 are disconnected from the −24 V line to prevent trigger signals from internal sources reaching the Schmitt amplifier. D5 permits current, from the +100 V and +24 V lines, to flow to ground.

3.6 'A' SWEEP GENERATOR

3.6.1 This system, reference Figure 2 (Pink), is a conventional Miller Integrator, TR66 and TR67, forming the basic ramp generator. The ramp slope is determined by selection of timing capacitors C275 to C279, C281 and C282, reference Figure 3 (Pink) and timing resistors R276 to R283, with R287 and R289 mounted on the 'A' TIME/DIV switch (S271), R91 provides calibration adjustment.

3.6.2 Trigger pulses from the 'A' Trigger amplifier are differentiated by R41 and L61. D64, being marginally biassed in the conducting direction, permits the fast positive-going edges to be applied to TR63 collector and TR64 base via C66. Negative-going edges are rejected by diode action. TR63 and TR64 form a gating bistable. During the WAIT period, when the sweep generator is receptive to trigger signals, TR63 is conducting and TR64 is off. The quiescent state of TR63 and TR64 is set by R73 which adjusts the bias of TR63 with respect to TR64. A positive pulse being applied to TR64 causes it to conduct; the feedback action via the coupled emitter, R76 and C66, switches TR63 off. This collector potential rises to reverse bias D64 and prevents further trigger pulses from entering the bistable and a positive-going gate pulse is made available at the front panel socket SK61 via R80.

3.6.3 TR65 clamps the D.C. level from which the ramp commences. The current flowing from TR65 collector, via D66, D69 and D71 to the timing resistors, is diverted through TR64, which reverse biases D66, D61 and D71 and allows the current through the timing resistors to flow into the timing capacitors.

3.6.4 The TR66 drain voltage then commences to rise linearly carrying TR67 base and emitter with it. A positive feedback to increase the loop gain is provided, via R99 and R96, thus improving ramp linearity by reducing the potential excursion at TR66 gate.

The ramp voltage appearing at the emitter of TR67 is fed to the sweep-out circuit, reference Figure 5 (Pink) via S271 and S192 and also to SK271 on the front panel via R288; and is also applied to the hold-off bistable TR68 and TR69, via D73 and the parallel combination of C75 with R103, R104 and R105. TR69 is normally conducting, drawing part of its collector current through neon lamp V61, mounted on the front panel, causing it to glow during the wait and sweep period.

3.6.5 The ramp terminates when TR68 base potential rises to the same value as TR69 base potential, switching TR68 on, and TR69 off and extinguishing V61. TR69 no longer draws current via R118 and D75, causing D76 to conduct and turn on TR63. The two transistors switch back to the state prior to receiving a trigger pulse. Flyback current then flows from TR65 to the timing capacitors via D66, D69 and D71, causing the ramp voltage to return linearly to the quiescent condition.

3.6.6 As it is undesirable for the sweep to be triggered before flyback is completed, a time delay is achieved by selecting a suitable capacitor mounted on S271, which holds TR69 in the off state, thus preventing TR64 being triggered to the conducting state. Hold-off capacitors C271 to C274 are charged during the sweep period via D73 and discharge during and after the flyback period via R103 to R106. R105 sets the sweep length. At the end of the hold-off period, TR69 conducts, permitting the gating bistable, TR63 and TR64, to be receptive to a trigger signal which initiates another sweep.

3.7 BRIGHT LINE AUTO

3.7.1 TR61 and TR62 form a monostable pair in which TR62 is normally conducting and TR61 is off. When S3a is in the non-auto position, D63 is back biassed and exerts no influence on the bias of TR63.

3.7.2 In the AUTO position R68 is open-circuited and the bias resistors, R72 and R73, are shunted by R65, which lowers TR63 base potential, causing the sweep to free-run in the absence of trigger signals, giving visual indication of the trace position.

3.7.3 Upon the application of positive and negative trigger pulses from the 'A' Schmitt amplifier, via C61; D61 being marginally forward biassed accepts and passes negative pulses to TR61 base, positive pulses being blocked by diode action. A negative pulse applied to TR61 base, causes TR61 to conduct for a period determined by C63 and R67, before switching back. The mean current drawn by TR61 causes a potential rise across R65, smoothed by capacitor C62 to reverse bias D63 and prevent the gating bistable free-running the 'A' sweep. In this condition the 'A' sweep is triggerable and the trace is locked to the input signal.

D62 prevent TR61 bottoming during its conducting period ensuring an approximate cycling frequency of about 25 Hz.

3.8 UNBLANKING AMPLIFIER

3.8.1 The Unblanking amplifier, reference Figure 3 (White) is a current to voltage convertor or transimpedance amplifier. Current input source for this amplifier is provided by R89, R93 and R92. Prior to the initiation of the sweep D67 is reverse biassed by D66, suppressing the CRT beam current. At the commencement of sweep, D66 is reverse biassed permitting current from the unblanking amplifier to flow to the −24 V line via D67, R89 and D68. In the 'A' INT BY 'B' position, an additional resistor R217, reference Figure 5 (Pink) is switched in series to reduce slightly the current drawn through D67 and reduce the beam intensity, so that when the 'B' timebase sweeps, the full beam current is restored for the 'B' sweep period via D198, R222, D203 and R218.

3.8.2 Unblanking signals from D67 and D198 via Pin 6 on SK601 are summed at earth potential in the emitter of TR351 reference Figure 3 (White). TR351 drift is compensated for by D351. This composite signal is mixed with the intensity control current at the base of TR352 which, with TR353, forms a low input and output impedance shunt feedback amplifier. R362 and C353 are the gain and frequency response determining components i.e. a 2 mA current change at the base of TR352 produces a 48 V change at the collector of TR353. TR354 and TR355 comprise a complimentary emitter follower stage to provide the large fast transients required.

3.9 'B' SWEEP TRIGGER AMPLIFIER

3.9.1 This amplifier, reference Figure 4 (Pink) can accept balanced trigger signals originating in the vertical amplifier or single-ended A.C. coupled external signals via a panel co-axial socket SK151.

3.9.2 Balanced signals are fed into a high impedance input from a balanced 150 Ω transmission line terminating at the 'A' trigger amplifier. C152 and C154 block the D.C. component and limit the low frequency response to approximately 3.5 Hz. When S152 is in the INT position, balanced signals are applied via POLARITY switch S151 to TR151 and TR152 bases, a frequency compensated long-tailed pair amplifier.

R153, connected between the +24 V line and ground, permits bias adjustment to TR151 thus enabling any point on the input signal to be aligned to the switch-over point of the 'B' Schmitt trigger TR154 and TR155. TR153, R165, R166, R167 and R168 form a shunt feedback stage acting as a buffer amplifier between TR152 and TR154.

3.9.3 In the AUTO position; the LEVEL control, R153, is switched out of circuit and the output from TR155 collector is integrated by R174 and C157 and fed back to the base of TR153 via R165. The circuit then oscillates in the absence of trigger signals at a frequency of approximately 35 Hz. The base waveform of TR154 is triangular in shape and oscillates between the triggering levels of the Schmitt. The mark space ratio is adjusted to unity by R159 and the backlash set to 60 mV by R173.

3.9.4 External trigger signals from front panel socket SK151 are applied via S152 and R151 to the appropriate base of the trigger amplifier. The squarewave response is set up by adjustment of a twisted pair across R151.

3.10 'B' SWEEP GENERATOR

3.10.1 This system is a conventional Miller integrator TR196 and TR197 forming a basic ramp generator, reference Figure 5 (Pink). The ramp slope is determined by selection of timing capacitors C251 to C257 reference Figure 3 (Pink) and timing resistors R251 to R258 mounted on the 'B' TIME/DIV switch S251. R236 provides a calibration adjustment. A close operational similarity exists with the 'A' ramp generator so a full description will not be necessary, except to note that the ramp is terminated by the zener diode D201 and flyback is delayed until the 'A' sweep flyback occurs.

3.10.2 Initiation of the 'B' ramp is dissimilar and totally dependent upon the presence of the 'A' sweep ramp. The 'A' ramp voltage, divided down by R191 and R193, is applied to TR191 base. TR191 and TR192 form a bistable, where TR191 is conducting initally. Conduction switch-over takes place when the divided-down 'A' ramp voltage of TR191 base is equal to the voltage of TR192 base, set by potential divider R199, a precision wirewound potentiometer on the front panel. At the instant of switch-over, TR191 collector current falls rapidly and a negative-going voltage step is applied to TR193 via R206 and C196.

3.10.3 When S191a is in the VAR position, the D.C. bias on TR193 is such that the negative step applied causes TR193 to switch on and TR194 to switch off. D195 anode potential falls towards the negative line as TR195 current is insufficient to sustain a high enough potential across R212 and R213, and it is caught just below ground potential by D194, D196 and D197 are instantly back biassed. TR196 through Miller action commences to generate the 'B' ramp voltage.

3.10.4 With S191a in the TRIG position, the slightly higher bias on TR193 base prevents conduction switch-over upon receipt of the negative step from TR191. TR193 remains off and TR194 conducts with base bias just slightly more negative than TR193.

3.10.5 The 'B' LEVEL control in the AUTO position; or adjusted to cause the 'B' Schmitt to operate, permits any input trigger

signals of sufficient amplitude to pass fast edges squarewave voltages to D193 via differentiating network C195 and R207. D193 will pass the positive-going differentiated pulses to TR193 collector and TR194 base via C198 and R216. Negative-going spikes are rejected by diode action.

The first positive-going pulse from D193 reaching TR194 base, after the negative step application to TR193 base, causes conduction changeover between TR193 and TR194, initiating the 'B' ramp. Summarising: the 'B' ramp is initiated in the VAR position of S191a by the presence of the 'A' ramp voltage and the setting of DELAY TIME MULTIPLIER, R199. In the TRIG position of S191a are the foregoing conditions plus trigger pulses via D193 from the 'B' Schmitt.

3.10.6 During the period of the 'B' sweep, D198 is forward biassed and current from the unblanking amplifier then flows to the −24 V line via R222, D203, R218 and S192d. A small proportion of this current relative to the current drawn from the same source by the 'A' ramp generator, permits a momentary brightening of the CRT trace. The adjustment of R199 positions the bright portion of the trace to any point on the 'A' trace, the length of the bright portion being dependent upon the 'B' TIME/DIV setting.

Output voltages of both 'A' and 'B' ramp generators are converted to suitable currents by R230 and R233 respectively and fed via Pin 2 on SK601 and R7 to the base of TR3. S192a, S192c and S192d or all three select either 'A', 'B' or MIXED sweeps resepctively.

3.11 X-Y

3.11.1 Operation of the pull out switch S193, in conjunction with setting the 'B' TIME/DIV switch to EXT X, operates relay RL191 (fig. 5). Internally connected balanced signals originating in the vertical amplifier system are then diverted to the X amplifier. CH1 signals, from the source called "Positive trig in" are switched via RL191a contacts to one side of the variable resistor R242 (X-Y calibrate), and with the addition of a DC bias from the +24 V line, via R241, are passed to the horizontal amplifier, via R243 and C207, RL191c, R234 and connection 2 on the rear edge of PC188. C207 provides the necessary phase advance correction to frequencies up to about 50 kHz. In this mode the time base generator and trigger amplifier are inoperative.

Normal external X facility is restored by operating the X-Y switch to the normal (IN) position. Relay RL191 releases and restores signal path from socket SK1 to the X amplifier via RL191c (normal), R234 and rear edge connection 2.

3.12 HORIZONTAL AMPLIFIER

3.12.1 This comprises an input mixing amplifier and an overall multistage feedback amplifier, reference Figure 2 (White). The input amplifier TR3 has a gain of 0.5 with low input and output impedances. It mixes the sweep signal with the two position control voltages and provides a composite signal to the main amplifier. R17 is the balance control which sets the voltage at TR3 collector to centralize the position controls. C5 provides H.F. peaking.

3.12.2 The main amplifier is a voltage feedback type which has the advantage of high input and low output impedances. R32 and R31 are the feedback resistors and the gain is determined by these resistors and the resistors between the emitters of TR4 and TR5. For X1 gain these are R26 and R27. On X10 gain R28 and R29 are switched in parallel with R26 and R27. R27 sets X1 gain and R29 sets X10 gain.

3.12.3 The mean X plate potential is set by R23 to approximately 57 V. D4 and D5 limit the excursion on the bases of TR6 and TR7 when X10 gain is used. The output stage TR6, TR7, TR8 and TR9 is capable of delivering large current swings into capacitive loads whilst running at a low quiescent current. In the positive direction the emitter followers TR8 and TR9 supply the current and in the negative direction TR6 and TR7 supply the current through diodes D6 and D7. The output is push-pull, TR4 and TR5 being a phase-splitting stage.

3.13 CALIBRATOR

3.13.1 The calibrator, reference Figure 2 (White) is a simple, saturating multivibrator running at approximately 1 kHz. The timing components are R1, C1, C3 and R6. The transistor TR1 switches between −24 V and earth, TR2 between −24 V and +0.7 V. D2 catches TR2 collector as it aims for +24 V. The accuracy of the calibrator depends on the resistors R5, R9, R13 and the −24 V line. R4 is a ± 1.2% control to take up the tolerance of R5. If SK1 and SK2 are shorted together 3 mA passes through the short circuit determined by the −24 V line and R4 + R5 + R13.

3.14 TRACE LOCATE

This reduces the maximum swing of vertical and horizontal amplifiers and free-runs the sweep. The vertical amplifier is compressed in the delay line termination stage TR701 and TR702. The sweep is made to free-run by applying a positive voltage to Pin 13 on SK601 via a 330 kΩ resistor R602.

3.15 POWER SUPPLY

+105 V, −24 V and +24 V lines, reference Figure 4 (White) are all stabilizing circuits, protected against short circuits, connected to the vertical input and sweep amplifiers via Pins 4, 2, 8 and 9 on SK602 and Pins 14, 4, 8 and 9 on SK601 respectively.

3.15.1 +24 V LINE

D405, D406, D407 and D408 form a full wave bridge circuit. R424, R425 and R426 act as a sampling chain and use the −24 V line as the reference voltage. Any attempted change in output voltage of the +24 V line is padded back to the controlling network of TR408, TR406 and TR405, which reduces the change to a very small value. TR402 and R407 provide current limiting to protect the output from short circuits.

3.15.2 −24 V LINE

This is used as a reference voltage for the other two lines and it is essential that this line is set to its correct voltage. D409, D411, D412 and D413 form a full wave bridge circuit. TR411 and TR407 are a long-tailed pair and together with TR409 and TR413 stabilize the circuit. TR403 and R405 provide current limiting and protect the output from short circuits.

3.15.3 105 V LINE

D401, D402, D403 and D404 provide full wave bridge rectification. This line differs from the −24 V and +24 V lines in that if a short circuit occurs in the output the instrument must be switched off and turned on again before the line can be restored to its normal voltage. TR414, TR412, TR415 and TR416 stabilize the output and TR401 and TR404 provide the short circuit protection in the form of a bistable which is changed over by current flowing through R406.

3.15.4 E.H.T.

The E.H.T., reference Figure 3 (White) is derived from a Class C oscillator operating at approximately 28 kHz. The oscillator transistor TR304 uses transformer, T301, as its load and main frequency determining component. A feedback loop, including a high gain amplifier, TR301, TR302 and TR303, regulates the cathode supply, which is set to the correct potential by adjusting R301, and the grid is set to the correct tube cut-off potential by adjusting R315. Diodes D304 and D303 provide half-wave rectification from T301 for the cathode and grid supplies. A five stage voltage multiplier (quintupler) provides the +12.5 kV PDA. The input to the multiplier is taken from the same tapping on T301 as that used for the cathode supply.

Thermistor TH301 limits the output voltage at switch on and C304 reduces E.H.T. feedback into the unregulated +30 V line. The tube is focused by adjusting R327, which is on the front panel.

CHAPTER 4
MAINTENANCE AND CALIBRATION

4.1 GENERAL

4.1.1 This instrument comprises three main assemblies: Main Frame, Vertical and Sweep Units. To facilitate references made in this section a colour code has been adopted to identify the appropriate PC boards (see Introduction).

4.1.2 Before it is assumed a fault condition exists, control settings should be verified with reference to the pre-operational checks, para 2.2. Where a component is replaced e.g. transistor, it is advised that the calibration check detailed in para 4.4. be carried out.

4.1.3 The entirely solid-state design of the instrument should render frequent re-adjustment of the internal preset controls unnecessary; however, to ensure full measurement accuracy, it is desirable to make an occasional check of the vertical amplifier sensitivity, reference 4.3.2. The internally generated 30 mV peak to peak calibrator waveform may conveniently be used for these checks.

4.2 MECHANICAL

4.2.1 ACCESS TO INTERIOR

The cabinet covers are removed as follows:–

1. Disconnect the power supply lead.
2. Turn four buttons on each cover to release.
3. Lift to clear channel.
4. The chassis rear plate is secured by four fixing screws, one at each corner.
5. The Vertical and Sweep units are secured by one screw each to the lower front casting. When unscrewed, the units may be withdrawn.

4.2.2 LOCATION OF PRESET CONTROLS

Circuit	PC Board No.	Location w.r.t. CRT	
Calibrator	150	Right	Ref.
E.H.T.	148	Rear Right	Plates
Power Supply	149	Rear Centre	6.1,
Unblanking Amplifier	128	Rear Centre	6.2,
X Amplifier	150	Right	6.3
Y Amplifier	151	Left	white
Interface Connector Board	147	Across	
Attenuator	137	Vertical Unit Left	
Vertical Input	152	Vertical Unit Left	
Trigger Amplifier 'A'	132	Sweep Unit Right	
Trigger Amplifier 'B'	188	Sweep Unit Left	
'A' Sweep Generator	132	Sweep Unit Right	
'B' Sweep Generator	188	Sweep Unit Left	

4.2.3 CRT REMOVAL

1. Remove top, bottom and rear covers.
2. Turn instrument upside down.
3. Release PDA cable securing clips.
4. Cautiously slide cable connexion moulded plug and socket apart to expose connexion.
5. Earth PDA connexion; then disconnect.
6. Remove four neck pins.
7. Remove tube base socket.
8. Remove Intensity, Focus, Fine and Position knobs.
9. Remove two bezel retaining nuts.
10. Allow bezel to fall forward sufficiently to remove filter.
11. Lift-out bezel.
12. Ease CRT forward through front panel aperture.
13. Remove fourt CRT location mouldings.
14. Remove CRT.

4.2.4 CRT FITTING

Reverse the order detailed in para 4.2.3 above

4.3 CALIBRATION

4.3.1 The following procedure enables a calibration check of the instrument to be accomplished. It is advised that isolated adjustments are not made due to the risk of interaction with settings made in earlier checks. A functional check may be carried out as detailed in para 4.4, checking parameters are met, before proceeding to the next check. Adjustments, if made, should be minimal, except when setting-up procedures are referred to.

The following tools and facilities will be required:–

Screwdrivers
- Plain 4 mm blade
- Non-capacitive.

Fixture extension, flexible 067-0688-00
- Screened, BNC adaptors

Calibration Units
- Vertical 067-0672-00
- Horizontal 067-0673-00

Adaptors
- BNC 3-way, Male/Female/Male
- BNC 2 mm

Fixture extension, rigid 067-0689-00
Probe X10, with earth lead
Oscilloscope Monitor
Pliers, flat nose
Normalizer, set to 33pF (067-0552-00)
Probe for voltage measurement

FACILITIES
- Variable voltage supply
- Voltage measurement from –24V to 2.5 kV ± 0.5%.

Input Signals Sinewave		Squarewave		Markers
	50 Hz	5 mV	1 kHz 1%	
1.6 V	100 Hz	25 mV	1 kHz 1%	
300 mV	50 kHz	50 mV	1 kHz 1%	
1 V	50 kHz	100 mV	1 kHz 1%	1–2–5 sequence
2 V	50 kHz	250 mV	1 kHz 1%	from 0.1μs
4 V	50 kHz	500 mV	1 kHz 1%	to 2 s.
300 mV	100 kHz	1 V	1 kHz 1%	
500 mV	10 MHz	2.5 V	1 kHz 1%	
500 mV	55 MHz	5.0 V	1 kHz 1%	
25 mV	20 MHz	10 V	1 kHz 1%	
25 mV	50 MHz	25 V	1 kHz 1%	
		50 V	1 kHz 1%	
		25 mV	50 kHz	
		1ns risetime	100 kHz	
		1ns 25 mV	1 MHz	
		1ns 200 mV	1 MHz	

Note: Input signal voltages are peak to peak
Signal generators should be constant amplitude.

4.3.2 INITIAL SETTINGS

1.1 Ensure that instrument is not connected to a power supply.
1.2 Check for correct Voltage Selector setting and fuse as in 2.6.1.
1.3 Push INVERT.
1.4 Set both DC-GND-AC to GND.
1.5 Set both VOLTS/DIV to 5 mV.
1.6 Push both VARIABLE and set fully clockwise.
1.7 Push TRIG SELECT CH1.
1.8 Push CHANNEL SELECT CH1.
1.9 Set both POSITION controls to mid position.
1.10 Set FINE and POSITION to mid position.
1.11 Set DELAY TIME MULT to 5.0.
1.12 Push REP, VAR, A ONLY, AUTO.
1.13 Push both POLARITY buttons in (+).

1.14 Push both INT.
1.15 Set A and B VARIABLE TIME/DIV to CAL.
1.16 Set A and B TIME/DIV to 0.1ms.
1.17 Connect instrument to a variable AC power supply.
1.18 Switch on variable power supply and increase voltage gradually to the instrument voltage setting.
1.19 Turn INTENSITY clockwise for POWER ON (Lamp should glow) and visible trace.
1.20 Adjust FOCUS and ASTIG.
1.21 Adjust TRACE ROTATION to align trace with graticule.

4.4 CALIBRATION PROCEDURE

4.4.1 POWER SUPPLY

CAUTION HIGH VOLTAGE.

1.1 Remove main covers.
1.2 Set voltages as shown in table.

LOCATION SKT 603 PC147 (white)		VOLTAGE PRESETS PC149 (white)
Pin No.	Voltage	Adjust
7	− 24	R428
3	+ 24	R425
5	+ 105	R433

4.4.2 SET CATHODE VOLTAGE −2.5kV.

NOTE:− A Voltmeter of input impedance greater than 25MΩ should be used.

1.1 Connect meter to Pin 2 (mauve wire) of CRT base.
1.2 Adjust preset R301 to PC148 (white) for a meter reading of −2.5kV.

4.4.3 SET GRID CUT-OFF.

1.1 Set TIME/DIV to 10ms.
1.2 Turn INTENSITY anticlockwise.
1.3 Adjust R315 PC148 (white) until trace just blanks out.

4.4.4 MAIN FRAME ADJUSTMENTS

Raster distortion

1.1 Apply 100kHz sinewave to CH1 input.
1.2 Adjust controls for 10 x 8 div raster.
1.3 Adjust R634 PC 147 for minimum raster distortion.
1.4 Disconnect signal and switch off instrument.

Horizontal balance

2.1 Remove Dual Sweep Unit.
2.2 Insert HORIZONTAL CALIBRATION UNIT (067-0673-00) and switch on instrument.
2.3 Apply 5V D.C. to input.
2.4 Set horizontal POSITION and FINE to mid position.
2.5 Adjust R17 PC150 (white) to centralise spot.

Horizontal plate potentials

3.1 Connect a voltmeter between Pin 14 PC150 and GND.
3.2 Adjust R23 PC150 for 57V D.C.
3.3 Remove 5V input.

Horizontal sensitivity

4.1 Apply 10V, 1kHz squarewave to HORIZONTAL input.
4.2 Adjust R27 PC150 for 10.0 div display.
4.3 Apply 1V, 1kHz squarewave to HORIZONTAL input.
4.4 Pull FINE for X10 magnification.
4.5 Adjust R29 PC150 for 10.2 div display.
4.6 Disconnect signal and switch off instrument.
4.7 Remove HORIZONTAL CALIBRATION UNIT.
4.8 Insert Sweep Unit and switch on instrument.

Horizontal linearity

5.1 Apply 20MHz to CH1 input.
5.2 Set TIME/DIV to 0.1μs.
5.3 Set controls for a 3 division locked trace.
5.4 Adjust C11 PC150 for best linearity on the first few cycles.
5.5 Pull FINE for X10 magnification.
5.6 Adjust C13 and C5 PC150 for best linearity on the first few cycles.
5.7 Push FINE.
5.8 Disconnect signal.

Calibrator setting

6.1 Select CH1.
6.2 Apply 25mV, 1kHz squarewave to CH1.
6.3 Set DC-GND-AC to DC.
6.4 Set VOLTS/DIV to 5mV.
6.5 Push VARIABLE in and set to CAL.
6.6 Set TIME/DIV to 1ms.
6.7 Adjust SET 5mV GAIN for 5 div display.
6.8 Disconnect 25mV input.
6.9 Connect 30mV CAL to CH1.
6.10 Adjust R4 PC150 (white) for a 6 div display to ±0.1 divisions.
6.11 Disconnect 30mV input.

Horizontal position balance

7.1 Set TIME/DIV to 1ms.
7.2 Adjust R17 PC150 to centralize trace so that POSITION and FINE move each end of trace past screen centre equally.

Unblanking amplifier pulse response

8.1 Set TIME/DIV to 0.1μs.
8.2 Set INTENSITY for just visible trace.
8.3 Adjust C353 PC128 (white) for uniformity of intensity at start of trace.

Vertical balance

9.1 Remove Vertical Unit.
9.2 Insert VERTICAL CALIBRATION UNIT (067-0672-00).
9.3 Select BAL.
9.4 Set TIME/DIV to 1ms.
9.5 Adjust R706 PC151 (white) to align trace with vertical centre.

Vertical sensitivity

10.1 Select CAL.
10.2 Apply 250mV 1kHz squarewave to vertical input.
10.3 Adjust R609 PC147 (white) for 5 div display ±0.2 div.
10.4 Disconnect signal.

Vertical pulse response

11.1 Set TIME/DIV to 0.1μs.
11.2 Pull FINE for X10 magnification.
11.3 Apply 1MHz squarewave with 1ns risetime to vertical input, to give 5 div display.
11.4 Adjust C608 PC147 to give flat top.
11.5 Adjust C711 and R722 PC151 for optimum response.
11.6 Adjust C707 PC151 for optimum response.
11.7 Set C704 PC151 to mid position.
11.8 Adjust L701 PC151 for minimum delay-line glitch.
11.9 Adjust C704 PC151 for optimum response.
11.10 Disconnect signal and switch off instrument.
11.11 Remove VERTICAL CALIBRATION UNIT.
11.12 Insert Vertical Unit.

SWEEP UNIT ADJUSTMENTS

4.4.5 'A' TRIGGER

NOTE: 'A' controls are used unless otherwise stated.

1.1 Withdraw Sweep Unit and connect to Mainframe Unit via flexible extension (067-0688-00).
1.2 Remove unit covers.
1.3 Switch on instrument.

Set sensitivity

2.1 Push A ONLY, AC and INT.
2.2 Depress POLARITY.
2.3 Set TIME/DIV to 10μs.
2.4 Set VOLTS/DIV to 0.5V.
2.5 Select CH1 trig and channel.
2.6 Apply 300mV, 50kHz sinewave to CH1.

2.7 Set DC-GND-AC to AC.
2.8 Obtain trace.
2.9 Connect monitor oscilloscope (M.O.) via screened X10 Probe to junction of R35/C15 PC132 (pink) GRID REF 6-E3).
2.10 Set M.O. TIME/DIV to 5μs.
2.11 Set M.O. VOLTS/DIV to 10mV input AC coupled and auto trigger.
2.12 Adjust R36 PC132 for triggering levels 80mV (0.8div) apart. Similar to Plate 4.1.
2.13 Check that triggering levels are within ± 10mV with change in POLARITY.
2.14 Check that trace starts on correct polarities.
2.15 Disconnect M.O. probe.
2.16 Disconnect signal.

Set level range
3.1 Push A ONLY, AUTO and INT.
3.2 Depress POLARITY.
3.3 Apply 1V 50kHz sinewave to CH1.
3.4 Set TIME/DIV to 10μs.
3.5 Set VOLTS/DIV to 1V.
3.6 Set DC-GND-AC to AC.
3.7 Adjust R26 PC132 (pink) so that trace does not free-run at LEVEL extremeties.
3.8 Disconnect signal.

Set external trigger
4.1 Apply 2V 50kHz sinewave to EXT and CH1.
4.2 Release and depress POLARITY.
4.3 Adjust LEVEL for trace triggering point to coincide.
4.4 Set trace start at centre of screen.
4.5 Push EXT.
4.6 Adjust R7 PC132 (pink) to align trigger point with screen centre.
4.7 Reduce signal to 300mV.
4.8 Observe stable trace on DC, AC, AC HF REJ with LEVEL control adjustment.
4.9 Disconnect signal.

Set Ext X
5.1 Push A ONLY, DC and INT.
5.2 Turn 'B' TIME/DIV fully anticlockwise.
5.3 Apply 100kHz sinewave to CH1 and EXT X linked together.
5.4 Set VOLTS/DIV to 1V.
5.5 Increase signal voltage until trace crosses extreme verticals.
5.6 Check that vertical difference between extremities is 4 divs ±0.8 div.
5.7 Adjust twisted pair on PC132 to minimize elliptical effect.
5.8 Set DC-GND-AC to GND.
5.9 Adjust signal voltage to give 5 div trace.
5.10 Increase signal frequency to reduce trace to 3.5 divisions.
5.11 Check frequency > 1.4MHz.
5.12 Disconnect signal.

Check H.F. triggering
6.1 Push A ONLY, AUTO, INT.
6.2 Turn 'B' TIME/DIV to 5μs.
6.3 Set DC-GND-AC to AC.
6.4 Set TIME/DIV to 0.1μs.
6.5 Apply 50MHz to CH1.
6.6 Set amplitude to 0.5 div
6.7 Check for locked trace on AUTO,DC, AC with LEVEL control adjustment.
6.8 Apply 500mV 50 MHz sinewave to EXT X and CH1.
6.9 Push EXT.
6.10 Check for locked trace on AUTO, DC, AC with LEVEL control adjustment.
6.11 Disconnect signal.

Check H.F. rejection
7.1 Push A ONLY, AC, INT.
7.2 Depress POLARITY.
7.3 Apply 20MHz to CH1.
7.4 Set VOLTS/DIV to give 8 div trace.
7.5 Set TIME/DIV to 0.2μs.
7.6 Adjust LEVEL to lock trace.
7.7 Push H.F. REJ.
7.8 Adjust LEVEL.
7.9 Observe trace unlockable.
7.10 Disconnect signal.

Check line trigger
8.1 Push A ONLY, AC LINE.
8.2 Depress POLARITY.
8.3 Set TIME/DIV to 5ms.
8.4 Apply AC line supply to CH1 via 10 : 1 Probe.
8.5 Set VOLTS/DIV to give 8 div trace.
8.6 Adjust LEVEL for locked trace.
8.7 Release and depress POLARITY.
8.8 Observe trace locks at all points of the waveform.
8.9 Disconnect signal.

4.4.6 'A' SWEEP

NOTE:— 'A' controls are used unless otherwise stated.

Set timing
1.1 Push A ONLY, AUTO and INT.
1.2 Depress POLARITY.
1.3 Turn VARIABLE fully clockwise.
1.4 Apply 1ms marker signal to CH1.
1.5 Set TIME/DIV to 1ms.
1.6 Set VOLTS/DIV to give approximately 2 div display.
1.7 Adjust LEVEL for locked trace.
1.8 Adjust R91 PC132 (pink) for one marker per division.
1.9 Disconnect signal.

Set H.F. timing
2.1 Apply 0.1μs marker signal.
2.2 Set TIME/DIV to 0.1μs.
2.3 Set VOLTS/DIV to give approximately 3 div display.
2.4 Adjust LEVEL for locked trace.
2.5 Adjust C281 on TIME/DIV switch (access hole in PC132. GRID REF 6-F2).
2.6 Adjust for one marker per div.
2.7 Check TIME/DIV ranges overlap using VARIABLE.
2.8 Check range calibration.
2.9 Disconnect signal.

Check stability
3.1 Push A ONLY, AUTO and INT.
3.2 Depress POLARITY.
3.3 Set TIME/DIV to 10μs.
3.4 Set VOLTS/DIV to 1V.
3.5 Apply 2V 50kHz to CH1.
3.6 Adjust LEVEL to lock trace.
3.7 Rotate R73 PC132 (pink) clockwise until trace free-runs.
3.8 Note slot position on R73.
3.9 Rotate R73 anticlockwise until trace disappears.
3.10 Note slot position.
3.11 Set R73 to centre of two noted positions.
3.12 Disconnect signal.

Set trace length
4.1 Push A ONLY, AUTO and INT.
4.2 Set DC-GND-AC to GND.
4.3 Set TIME/DIV to 0.1ms.
4.4 Adjust R105 PC132 (pink) for 10.4 divisions.

Check sawtooth and pedestal voltage
5.1 Apply 1ms marker signal to CH1.
5.2 Set VOLTS/DIV to give approximately 2 div display.
5.3 Connect M.O. probe to Pin 33 PC132 (GRID REF 6-H2) See plate 4.2.
CHECK: Y 1 = 15 ± 0.2V as Plate 4.2
Y 2 = 2 ± 0.5V as Plate 4.2
5.4 Disconnect signal.
5.5 Do not disconnect probe.

Set hold-off time
6.1 Set as table. See plate 4.3

Sweep Unit 'A' TIME/DIV	M.O. TIME/DIV.	M.O. X axis DIVISIONS
10ms	2ms	2 to 4
0.1ms	50 μs	1.2 to 2.4
10 μs	5 μs	1.2 to 2.4
0.5 μs	1 μs	1 to 2

6.2 Adjust R108 PC132 for optimum hold-off time as in plate 4.3.
6.3 Reset trace length.
6.4 Disconnect probe.

Check single shot
7.1 Apply 100ms marker signal to CH1.
7.2 Push REP, A ONLY, AC and INT.
7.3 Obtain trace by rotating LEVEL.
7.4 Set VOLTS/DIV to display approximately 2 div.
7.5 Set TIME/DIV to 0.2 sec.
7.6 Set DC-GND-AC to AC.
7.7 Push SINGLE sweep.
7.8 Observe neon goes off at end of sweep.
7.9 Set DC-GND-AC to GND.
7.10 Push RESET.
7.11 Observe neon glows with no sweep.
7.12 Set DC-GND-AC to AC.
7.13 Observe neon glows for period of sweep.
7.14 Push REP.
7.15 Disconnect signal.

4.4.7 'B' TRIGGER

Replace right hand cover of unit and turn over to give access to PC133.

NOTE:– 'B' controls are used unless otherwise stated.

Set internal triggering
1.1 Set DELAY TIME MULT (DTM) to 5.0.
1.2 Depress VAR/TRIG.
1.3 Push A INT BY B, 'A' AUTO and both INT's.
1.4 Depress POLARITY.
1.5 Rotate LEVEL fully anticlockwise.
1.6 Set TIME/DIV 'A' 10μs, 'B' 5μs.
1.7 Apply 1V 50 kHz sinewave to CH1.
1.8 Set VOLTS/DIV to 2V.
1.9 Set DC-GND-AC to AC.
1.10 Adjust 'A' LEVEL for locked trace.
1.11 Connect monitor oscilloscope (M.O.) via 10 : 1 probe to junction of R166/R168 PC188 (GRID REF 6-F6)(pink).
1.12 Set M.O. TIME/DIV to 5μs.
1.13 Set M.O. VOLTS/DIV to 5 mV.
1.14 Adjust R159 PC133 to obtain M.O. trace.
NOTE: if R159 is at the end of its range change over TR151 and TR152 PC188 (GRID REF 6-G5).
1.15 Adjust R173 PC133 for triggering levels. 60mV (1.2 div) apart similar to Plate 4.1.
1.16 Connect M.O. probe to junction of C195/R174 PC188 (GRID REF 6-F4).
1.17 Set M.O. VOLTS/DIV to 50mV.
1.18 Check M.O. trace is 1.25 ± 0.25V.
1.19 Reduce CH1 to give 0.2 div of trace.
1.20 Release and depress POLARITY.
1.21 Adjust R159 PC188 for optimum mark/space ratio.
1.22 Disconnect signal.

4.4.8 'B' SWEEP

NOTE: 'B' controls are used unless otherwise stated.

Set timing
1.1 Turn VARIABLE fully clockwise.
1.2 Set TIME/DIV 'A' 2ms, 'B' 1ms.
1.3 Apply 1ms marker signal to CH1.
1.4 Set DELAY TIME MULT (DTM) to 1.00.
1.5 Set VOLTS/DIV to approximately 2 div display.
1.6 Push B DEL BY A.
1.7 Adjust R236 PC188 for one marker per div.
1.8 Check TIME/DIV ranges overlap using VARIABLE.

Set H.F. timing
2.1 Apply 0.1μs marker signal to CH1.
2.2 Set TIME/DIV 'A' 0.2μs, 'B' 0.1 μs.
2.3 Adjust 'A' LEVEL for locked trace.
2.4 Adjust C255 (right hand side of 'B' TIME/DIV switch) for one marker per div.
2.5 Disconnect signal.

Check sawtooth and pedestal voltage
3.1 Apply 1ms marker signal to CH1.
3.2 Set TIME/DIV 'A' 2ms, 'B' 1ms.
3.3 Set VOLTS/DIV to give approximately 2 divisions display (GRID REF 6-G4).
3.4 Connect M.O. probe to pin 16 PC188 (GRID REF 6-G4) see Plate 4.2
Check Y1 = 15.5 ±0.5V as Plate 4.2
Y2 = 2.0 ± 0.5V as Plate 4.2
3.5 Disconnect M.O. probe.

Check range calibration
4.1 Set TIME/DIV's 'A' 0.2μs, 'B' 0.1μs.
4.2 Apply 0.1μs marker signal to CH1.
4.3 Turn both TIME/DIV switches together anticlockwise one setting at a time.
4.4 Set marker signal to correspond with 'B' TIME/DIV for each setting.
4.5 Adjust R236 PC188 (pink) to equalize errors for each setting.
4.6 Disconnect signal.

Set stability
5.1 Push A INT BY B and INT.
5.2 Release VAR/TRIG.
5.3 Depress POLARITY.
5.4 Set DELAY TIME MULT(DTM) to 5.0.
5.5 Connect 10MHz sinewave to CH1.
5.6 Set VOLTS/DIV to give 1 div of display.
5.7 Set TIME/DIV's 'A' 1μs, 'B' 0.1μs.
5.8 Adjust 'A' LEVEL for locked trace.
5.9 Turn 'B' LEVEL fully clockwise.
5.10 Set M.O. VOLTS/DIV 50mV.
5.11 Set M.O. TIME/DIV 2μs.
5.12 Connect M.O. probe to junction of R192/R196 PC188 (GRID REF 6-E4)(pink).
5.13 Observe M.O. trace reference Plate 4.4. 'C'
5.14 Adjust R204 PC133 (pink) so that small positive step travels towards and is just absorbed into large positive going step. Plate 4.4. 'A'
NOTE: further rotation of R204 is detrimental.
5.15 Turn LEVEL to AUTO small step should re-emerge, track forward to the negative going edge. Plate 4.4. 'B'
5.16 Disconnect probe.
5.17 Set VOLTS/DIV to give 0.5 div display.
5.18 Observe bright-up.
5.19 Push B DEL BY A.
5.20 Observe locked 'B' sweep by adjustment of LEVEL control.

Check level control
6.1 Set DTM to 5.
6.2 Push A INT BY B.
6.3 Depress POLARITY.
6.4 Turn LEVEL fully anticlockwise.
6.5 Set TIME/DIV's 'A' 10μs, 'B' 5μs.
6.6 Apply 50kHz sinewave to CH1.
6.7 Set VOLTS/DIV to give 2 div display.
6.8 Adjust INTENSITY for bright-up.
6.9 Rotate LEVEL.
6.10 Observe bright-up moves along slope.
6.11 Set bright-up start approximately halfway up slope.
6.12 Rotate DTM.
6.13 Observe bright-up jumps to same position on successive cycles.
6.14 Release and depress POLARITY.
6.15 Observe bright-up polarity change.
6.16 Re-check LEVEL control at 0.2 div of display.
6.17 Re-set stability if unsatisfactory.

Set external triggering
7.1 Apply 300mV 50kHz sinewave to 'B' EXT TRIG and CH1 together.
7.2 Push 'B' EXT.
7.3 Rotate LEVEL.
7.4 Observe bright-up.
7.5 Push B DEL BY A.
7.6 Observe locked 'B' sweep by adjustment of LEVEL control.
7.7 Disconnect signal.
7.8 Apply 1MHz squarewave via 50Ω termination to 'B' EXT TRIG.

7.9 Set 'B' LEVEL to centre of range.
7.10 Remove TR155 PC188 (pink) (GRID REF 6-F5).
7.11 Connect M.O. probe to junction R166/R168 PC188 (GRID REF 6-F5).
7.12 Set M.O. TIME/DIV 0.2μs.
7.13 Set M.O. VOLTS/DIV 20mV.
7.14 Adjust EXT TRIG input voltage for 4 divisions M.O. display.
7.15 Adjust twisted pair PC188 for optimum squarewave.
7.16 Replace TR155.
7.17 Remove probe and signal.

Check H.F. triggering
8.1 Push A INT BY B.
8.2 Set DTM to 5.0.
8.3 Set TIME/DIV 's 'A' 0.5μs 'B' 0.1μs.
8.4 Set VOLTS/DIV to 0.2.
8.5 Apply 0.5V 10MHz sinewave to 'B' EXT TRIG and CH1.
8.6 Release VAR/TRIG.
8.7 Adjust 'B' LEVEL.
8.8 Observe bright-up.
8.9 Push B DEL BY A.
8.10 Observe locked 'B' sweep with adjustment of LEVEL control.
8.11 Disconnect signal.

Check A & B mixed
9.1 Push A INT BY B and INT.
9.2 Depress POLARITY.
9.3 Turn LEVEL fully anticlockwise.
9.4 Apply 50kHz sinewave to CH1.
9.5 Set TIME/DIV's 'A' 0.5ms 'B' 20μs.
9.6 Set VOLTS/DIV for 2 div display.
9.7 Note position of bright-up.
9.8 Push MIXED.
9.9 Observe start of the expanded portion coincides with the start of the bright-up portion.
9.10 Release 'B' POLARITY.
9.11 Observe start of expanded portion changes slope.
9.12 Observe both portions of trace are of similar intensity.
9.13 Rotate DTM through range. Note start of expanded portion at constant point on slope.
9.14 Depress VAR/TRIG.
9.15 Rotate DTM.
9.16 Observe mixed sweep. Note start of expanded portion follows sinewave curve.
9.17 Disconnect signal.

4.4.9 CALIBRATE DELAY TIME MULTIPLIER (DTM)
1.1 Push A INT BY B, 'A' AUTO, and both INT's.
1.2 Depress POLARITY.
1.3 Set TIME/DIV's 'A' 1ms, 'B' 1μs.
1.4 Set DC-GND-AC to GND.
1.5 Adjust INTENSITY for maximum contrast.
1.6 Adjust FINE to align 'A' trace start with 1st vertical.
1.7 Set DTM to 1.0.
1.8 Adjust R202 PC188 (pink) to align spot on 2nd vertical.
1.9 Set DTM to 9.0.
1.10 Adjust R198 PC188 to align spot on 10th vertical.
1.11 Repeat last four operations until both alignments are correct.
1.12 Check for error <±1% on each major division.
1.13 Centralize bright-up spot.
1.14 Set TIME/DIV's 'A' 1μs, 'B' 0.2μs.
1.15 Adjust FINE to align 'A' trace start on 1st vertical.
1.16 Check bright-up <0.45μs from centre vertical.
NOTE: Turn unit on to left hand side and remove cover to give access to PC132.

Check delay jitter
2.1 Push A INT BY B, 'A' AUTO and both INT's.
2.2 Depress VAR/TRIG.
2.3 Set TIME/DIV's 'A' 1ms, 'B' 1μs.
2.4 Apply 1ms marker signal to CH1.
2.5 Set DC-GND-AC to DC.
2.6 Set VOLTS/DIV to give 4 div display.
2.7 Set 'A' POLARITY to match marker signal.
2.8 Set bright-up on 9th marker.
2.9 Push B DEL BY A.
2.10 Adjust R90 PC132 (pink) to centralize marker.
2.11 Adjust 'A' LEVEL to minimize jitter.
NOTE: lighthood may be required.
2.12 Check jitter <1 division reference Plate 4.5.
2.13 Switch off instrument.
2.14 Remove signal and extension lead.
2.15 Replace unit covers.
2.16 Insert Sweep Unit into Mainframe.
2.17 Switch on instrument.

4.4.10 VERTICAL UNIT ADJUSTMENTS
Set CH1 X5 balance
1.1 Push A ONLY, A AUTO'
1.2 Set 'A' TIME/DIV to 1ms.
1.3 Adjust POSITION to centralize trace.
1.4 Pull VARIABLE for X5 magnification.
1.5 Adjust D.C. BAL to re-centralize trace.
1.6 Push VARIABLE.
1.7 Re-centralize trace with POSITION control.
1.8 Repeat last four operations until no movement occurs.

Set CH2 X5 balance
2.1 Set as in CH1 using corresponding CH2 controls.
2.2 Switch off instrument. Remove Vertical Unit.
2.3 Remove unit left-hand cover.
2.4 Connect unit to Mainframe via extension lead.
2.5 Lay unit on right-hand side giving access to PC152.
2.6 Switch on instrument.

Set CH1 Variable gain balance
3.1 Push CH1 TRIG and CHANNEL SELECT.
3.2 Rotate VARIABLE anticlockwise.
3.3 Adjust POSITION to centralize trace.
3.4 Turn VARIABLE fully clockwise.
3.5 Adjust R703 PC152 (yellow) to re-centralize trace.
3.6 Repeat last four operations until no movement occurs.

Set invert balance
4.1 Adjust POSITION to centralize CH2 trace.
4.2 Pull INVERT and note new position of trace.
4.3 Adjust R704 PC152 (yellow) to centralize trace between two positions.
4.4 Push INVERT.
4.5 Repeat operations until no movement occurs.

Set CH2 Variable gain balance
5.1 Set as in CH1 using corresponding CH2 controls and R645 PC152 (yellow).
5.2 RE-CHECK CH2 X5 BALANCE.
5.3 RE-CHECK CH2 INVERT BALANCE:

Set CH1 Gain
6.1 Set TIME/DIV to 0.1ms.
6.2 Set VOLTS/DIV to 5mV.
6.3 Select CH1.
6.4 Set DC-GND-AC to DC.
6.5 Apply 25mV 1kHz squarewave to CH1.
6.6 Rotate SET GAIN 5mV.
6.7 Check amplitude ranges from <4.5 to >5.5 divisions.
6.8 Set amplitude to 5 divisions.
6.9 Turn VARIABLE fully anticlockwise.
6.10 Check amplitude <2.0 divisions.
6.11 Turn VARIABLE fully clockwise and pull.
6.12 Reduce input to 5mV.
6.13 Rotate SET GAIN 1mV.
6.14 Check amplitude ranges from <4.5 to >5.5 divisions.
6.15 Set amplitude to 5 divisions.
6.16 Disconnect signal.

Set CH2 gain
7.1 Set as in CH1 using corresponding CH2 controls.

Set CH1 trigger
8.1 Place unit on its left-hand side.
8.2 Remove cover to expose PC153.
8.3 Select CH1.
8.4 Set TIME/DIV to 5μs.
8.5 Set VOLTS/DIV to 5mV.
8.6 Set DC-GND-AC to DC.
8.7 Apply 25mV 50kHz sinewave to CH1.
8.8 Push ALT (TRIG).

8.9 Push DC on Sweep Unit.
8.10 Adjust LEVEL to start trace on vertical centre line.
8.11 Push CH1 (TRIG).
8.12 Adjust R797 PC153 (yellow) to correct trigger point movement.
8.13 Disconnect signal.

Set CH2 trigger
9.1 Set as in CH1 using corresponding CH2 controls.
9.2 Adjust R798 PC153 (yellow) to correct trigger point movement.

CH1 attenuator compensation
10.1 Switch off instrument.
10.2 Remove extension lead and fit right-hand cover.
10.3 Connect unit to Mainframe via extension board (670-2864-00).
10.4 Switch on instrument.
10.5 Push A ONLY, AUTO.
10.6 Set TIME/DIV to 0.1μs.
10.7 Set DC-GND-AC to DC.
10.8 Select CH1.
10.9 Set VOLTS/DIV ranges as in table.
10.10 Set for flat response.
10.11 Apply 25mV 1kHz via input normalizer 33pF to CH1.

CH1 & CH2 VOLTS/DIV SETTING	INPUT VOLTAGE	ADJUST TRIMMER PC 137
5 mV	50 mV	C916
Remove input normalizer	—	—
10 mV	50 mV	C917
20 mV	100 mV	C918
50 mV	250 mV	C907
0.1 V	0.5 V	C915
0.2 V	1 V	C914
0.5 V	2.5 V	C906
5 V	25 V	C905
Apply input via X10 probe		Adjust probe trimmer
50 mV	0.5 V	C904
0.5 V	5 V	C903
5 V	50 V	C902

CH2 attenuator compensation
11.1 Set and adjust as in CH1 using corresponding CH2 controls.
11.2 Disconnect signal.
11.3 Switch off instrument.
11.4 Remove extension board and refit unit to instrument.
11.5 Switch on instrument.

Set CH1 pulse response
12.1 Select CH1 TRIG AND CHANNEL SELECT.
12.2 Set VOLTS/DIV to 5mV.
12.3 Set TIME/DIV to 0.1μs and push FINE.
12.4 Set DC-GND-AC to AC.
12.5 Apply 25mV 1MHz <1ns risetime squarewave to CH1.
12.6 Adjust C616 and R688 PC152 (yellow) for trace overshoot <0.1 divisions.
12.7 Pull FINE for X10 magnification.
12.8 Adjust C614 PC152 (yellow) for 10% - 90% risetime <0.7 ± 0.1 div.
12.9 Disconnect signal.

Set CH2 pulse response
13.1 Set as in CH1 using corresponding CH2 controls.
13.2 Adjust C617 and R689 PC152 (yellow) for trace overshoot.
13.3 Adjust C615 PC152 for risetime.

Check CH1 X1 bandwidth
14.1 Select CH1 TRIG AND CHANNEL SELECT.
14.2 Set TIME/DIV to 1ms.
14.3 Apply 50kHz sinewave to CH1.
14.4 Adjust generator to give 6 div display.
14.5 Switch generator to 50MHz.
14.6 Check amplitude >4.2 div of display.

Check CH1 X5 bandwidth
15.1 Pull VARIABLE for X5 magnification.
15.2 Apply 50kHz sinewave to CH1.
15.3 Adjust generator to give 6 div display.
15.4 Switch generator to 15MHz.
15.5 Check amplitude <4.2 div of display.
15.6 Disconnect signal.

Check CH2 X1 bandwidth
16.1 Check as for CH1 using corresponding CH2 controls.

Check CH2 X5 bandwidth
17.1 Check as for CH1 using corresponding CH2 controls.
17.2 Replace left-hand cover of unit.
17.3 Re-check CH1 and CH2 X5 BALANCE.

Check calibration. X–Y
18.1 Remove S2C unit from main frame and connect to main frame by extension lead (part number 067-0688-00),
18.2 Set CH1 and CH2 to 0.1 V/div and DC.
18.3 Set trig select to CH1 and channel select to CH2.
18.4 Simultaneously apply 1 kHz sine wave to CH1 and CH2 inputs.
18.5 Set S2C for X-Y display.
18.6 Set channel position controls and input amplitude for diagonal display, of 8 vertical divisions.
18.7 Adjust R242 on PC188 for 45° slope over 8 x 8 divisions. Switch off.
18.8 Disconnect extension lead, replace S2C unit in main frame.
18.9 Simultaneously apply 50 kHz sine wave to CH1 and CH2 inputs. Set input to display diagonal over 8 x 8 divisions.
18.10 Check display ellipticity ≯1.0 mm. on minor axis.

Sum balance
19.1 Select ALT CHANNEL SELECT.
19.2 Set both DC-GND-AC to GND.
19.3 Set TIME/DIV to 1ms.
19.4 Centre both traces with POSITION controls.
19.5 Push SUM.
19.6 Adjust R614 PC147 (white) to centre trace.

Switch off instrument, secure units in Mainframe and replace main covers.

Switch on instrument to ensure that covers do not cause short circuit faults.

Switch off instrument and variable power supply.

Disconnect instrument from variable power supply.

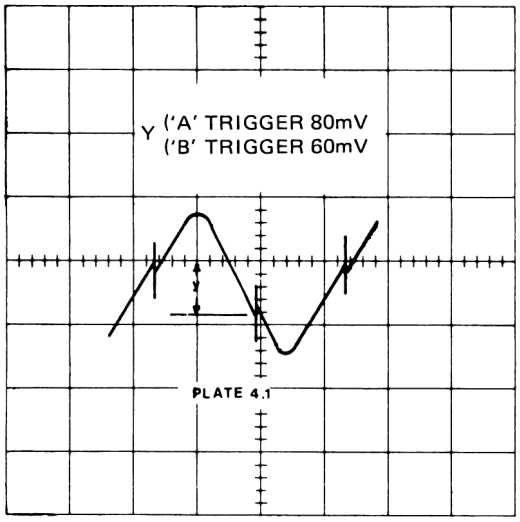

PLATE 4.1

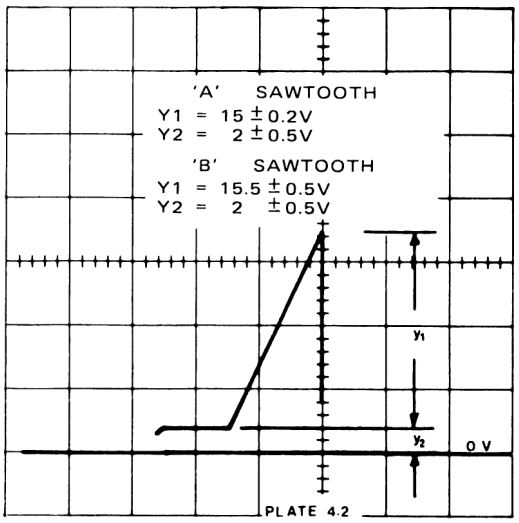

PLATE 4.2

'A' HOLD – OFF TIME

Unit 'A' Time/Div	M.O. Time/Div	M.O. X Axis Divisions
10 ms	2 ms	2 to 4
0.1 ms	50 μs	1.2 to 2.4
10 μs	5 μs	1.2 to 2.4
0.5 μs	1 μs	1 to 2

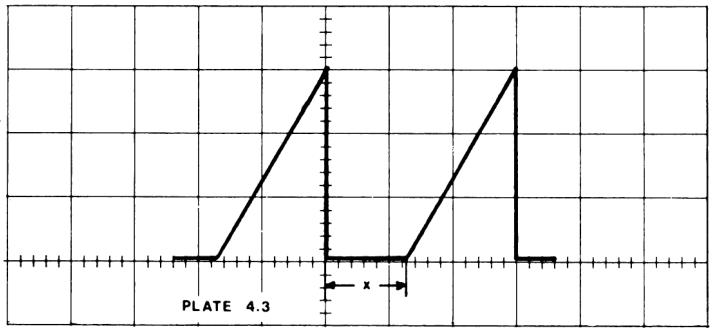

PLATE 4.3

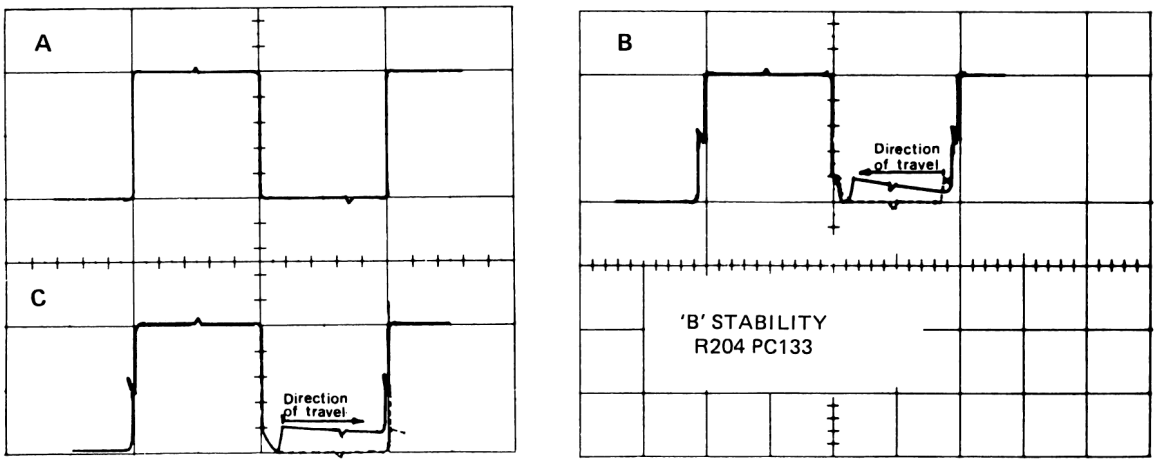

PLATE 4.4

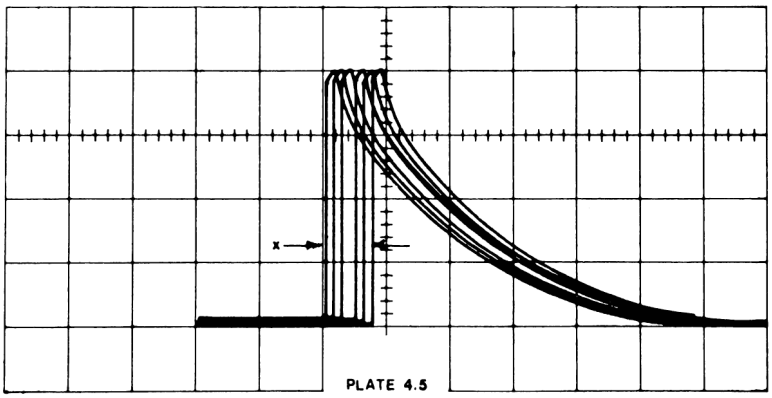

PLATE 4.5

DELAY JITTER

CHAPTER 5
COMPONENTS LIST

This chapter is divided into three sections. The following colours are used to facilitate cross-referencing between the chapters, white – Display unit, yellow – Vertical amplifier and pink – Sweep unit.

Values of resistors are stated in ohms or multiples of ohms; ratings at 70°C are in watts or sub-multiples of watts. Values of capacitors are stated in sub-multiples of farads; ratings at 70°C are in volts or kilovolts.

Whenever possible, exact replacements for components should be used, although locally available alternative may be satisfactory for standard components.

Any order for replacement parts should include:

1. Instrument type
2. Instrument serial number
3. Component circuit reference
4. Component part number
5. Component value

ABBREVIATIONS

BM	Button mica	CMP	Cermet preset	PS	Polystyrene
C	Carbon	E	Electrolytic	Se	Selenium
CP	Carbon preset	Ge	Germanium	Si	Silicon
CV	Carbon variable	MF	Metal Film	SM	Silver mica
CER	Ceramic	MO	Metal oxide	WW	Wire-wound
CT	Ceramic trimmer	PE	Polyester	WWP	Wire-wound preset
CM	Cermet thick film	PP	Polypropylene	WWV	Wire-wound variable

CIR REF	PART NUMBER	VALUE F	DESCRIPTION TYPE	TOL %	RATING V	Eff. Ser.No.
C1	285-1015-00	4.7 n	PE	20	160	
C2	290-0627-00	22 μ	E		40	
C3	285-0800-00	10 μ	PE	20	250	
C4	281-0734-00	100 n	CER		30	
C5	281-0192-00	2-6 p	CT		250	
C6	281-0710-00	10 n	CER		250	
C7	285-0800-00	10 n	PE	20	250	
C8	285-0915-00	100 n	PE	20	100	
C9	281-0804-00	10 p	CER	±0.5 p	400	
C10	285-0854-00	100 p	PS	2 p	350	
C11	281-0135-00	4-20 p	CT		250	
C12	285-0870-00	120 p	PS	2	350	
C13	281-0191-00	10-60 p	CT		250	
C14	290-0664-00	4.7 m	E		160	
C301	285-1014-00	1 μ	PE	20	63	
C302	290-0495-00	47 μ	E		40	
C303	281-0736-00	1 n	CER		8 k	
C304	290-0495-00	47 μ	E		40	
C305	285-0799-00	33 n	PE	20	250	
C306	281-0681-00	10 n	CER		4 k	
C307	285-0837-00	20 n	PE		5 k	
C308	285-1015-00	4.7 n	PE	20	160	
C309	281-0681-00	10 n	CER		4 k	
C310	285-0837-00	20 n	PE		5 k	
C311	281-0677-00	10 n	CER		2 k	
C312	281-0710-00	10 n	CER		250	
C351	285-0800-00	10 n	PE	20	250	
C352	281-0710-00	10 n	CER		250	
C353	281-0183-00	0.5-3 p	CT		250	
C354	285-0800-00	10 n	PE	20	250	
C355	285-0800-00	10 n	PE	20	250	
C401	285-0793-00	10 n	PE	20	630	
C402	285-0793-00	10 n	PE	20	630	
C403	285-0793-00	10 n	PE	20	630	
C404	290-0547-00	330 μ	E		160	
C405	290-0624-00	2.2 m	E		40	
C406	290-0624-00	2.2 m	E		40	
C407	281-0710-00	10 n	CER		250	
C408	290-0494-00	47 μ	E		25	
C409	285-0915-00	100 n	PE	20	100	
C410	285-0854-00	100 p	PS	2 p	350	
C411	290-0635-00	4.7 μ	E		63	
C412	285-0870-00	120 p	PS	2	350	
C413	285-0796-00	100 n	PE	20	250	
C414	290-0627-00	22 μ	E		25	
C415	290-0627-00	22 μ	E		25	
C416	290-0625-00	4.7 μ	E		160	

CIR REF	PART NUMBER	VALUE F	DESCRIPTION TYPE	TOL %	RATING V	Eff. Ser.No.
C601	281-0710-00	10 n	CER		250	
C602	285-0800-00	10 n	PE	20	250	
C603	285-0915-00	100 n	PE	20	100	
C604	285-0800-00	10 n	PE	20	250	
C605	281-0833-00	20 p	CER	± 5	400	
C606	281-0833-00	20 p	CER	± 5	400	
C607	281-0836-00	27 p	CER	± 5	400	
C608	281-0135-00	4-20 p	CT		250	
C609	281-0710-00	10 n	CER		250	
C611	281-0710-00	10 n	CER		250	
C701	285-0915-00	100 n	PE	20	100	
C702	285-0800-00	10 n	PE	20	250	
C703	281-0842-00	39 p	CER	±5	400	
C704	281-0135-00	4-20 p	CT		250	
C705	285-0800-00	10 n	PE	20	250	
C706	281-0710-00	10 n	CER		250	
C707	281-0135-00	4-20 p	CT		250	
C708	281-0710-00	10 n	CER		250	
C709	281-0842-00	39 p	CER	±5	400	
C711	281-0135-00	4-20 p	CT		250	
C712	285-0915-00	100 n	PE	20	100	
C713	290-0625-00	4.7 μ	E		160	
C714	281-0710-00	10 n	CER		250	
C715	281-0804-00	10 p	CER	±0.5 p	400	

CIR REF	PART NUMBER	VALUE V	DESCRIPTION	TYPE	TOL %	RATING	Eff. Ser. No.
D1	152-0062-01		1N914/1N4148	Si		75 V	
D2	152-0062-01		1N914/1N4148	Si		75 V	
D3	152-0062-01		1N914/1N4148	Si		75 V	
D4	152-0062-01		1N914/1N4148	Si		75 V	
D5	152-0062-01		1N914/1N4148	Si		75 V	
D6	152-0062-01		1N914/1N4148	Si		75 V	
D7	152-0062-01		1N914/1N4148	Si		75 V	
D301	152-0062-01		1N914/1N4148	Si		75 V	
D302	152-0554-00	50	BAY 74	Si		200 mA	
D303	152-0515-00	6 k	Rectifier	Si		10 mA	
D304	152-0515-00	6 k	Rectifier	Si		10 mA	
D305	152-0388-00	130	Zener	Si	5	330 mW	
D306	152-0510-00	150	Zener		5	1 W	
D350	152-0062-01		1N914/1N4148	Si		75 V	
D351	152-0062-01		1N914/1N4148	Si		75 V	
D352	152-0062-01		1N914/1N4148	Si		75 V	
D353	152-0544-00	43	Zener	Si	5	700 mW	
D354	152-0062-01		1N914/1N4148	Si		75 V	
D355	152-0062-01		1N914/1N4148	Si		75 V	
D356	152-0062-01		1N914/1N4148	Si		75 V	
D357	152-0062-01		1N914/1N4148	Si		75 V	
D358	152-0494-00	75	Zener	Si	5	1 W	
D401	152-0341-00	450	Rectifier	Si		500 mA	
D402	152-0341-00	450	Rectifier	Si		500 mA	
D403	152-0341-00	450	Rectifier	Si		500 mA	
D404	152-0341-00	450	Rectifier	Si		500 mA	
D405	152-0341-00	450	Rectifier	Si		500 mA	
D406	152-0341-00	450	Rectifier	Si		500 mA	
D407	152-0341-00	450	Rectifier	Si		500 mA	
D408	152-0341-00	450	Rectifier	Si		500 mA	
D409	152-0341-00	450	Rectifier	Si		500 mA	
D411	152-0341-00	450	Rectifier	Si		500 mA	
D412	152-0341-00	450	Rectifier	Si		500 mA	
D413	152-0341-00	450	Rectifier	Si		500 mA	
D414	152-0348-00	6.2	Zener	Si		330 mW	
D415	152-0062-01		1N914/1N4148	Si		75 V	
D416	152-0062-01		1N914/1N4148	Si		75 V	
D417	152-0468-00	150	Rectifier	Si		200 mA	
D601	152-0062-01		1N914/1N4148	Si		75 V	
D602	152-0062-01		1N914/1N4148	Si		75 V	
D603	152-0062-01		1N914/1N4148	Si		75 V	
D604	152-0062-01		1N914/1N4148	Si		75 V	
D605	152-0062-01		1N914/1N4148	Si		75 V	

CIR REF	PART NUMBER	VALUE V	DESCRIPTION	TYPE	TOL %	RATING	Eff. Ser. No.
D606	152-0062-01		1N914/1N4148	Si		75 V	
D607	152-0546-00	47	Zener	Si	5	770 mW	
D702	152-0472-00	5.6	Zener	Si	5	330 mW	
D703	152-0472-00	5.6	Zener	Si	5	330 mW	
D704	152-0543-00	5.1	Zener	Si	5	330 mW	
D705	152-0547-00	22	Zener	Si	5	330 mW	
DL601	175-0271-00	Coaxial Cable		4ons/ft			
FS401	159-0081-00	1A (200-250V)	1.25 in. delay				
	159-0119-00	2A (100-125V)	1.25 in. delay				
FS402	159-0073-00	1A	1.25 in. fast				
FB	276-0597-00	Ferrite bead Mullard FX1115					
L1	108-0482-00	160 μH	Fixed inductor				
L701	114-0323-00		Variable inductor				
L702	108-0700-00		Trace rotation coil 1920 turns				
LP401	150-0074-00	6.5V	Les			1 W	

CIR REF	PART NUMBER	VALUE ohms	DESCRIPTION TYPE	TOL %	RATING W	Eff. Ser.No.
R1	317-0154-01	150 k	C	5	125 m	
R2	317-0822-01	8.2 k	C	5	125 m	
R3	317-0103-01	10 k	C	5	125 m	
R4	311-1446-00	220	CP	20	75 m	
R5	321-0280-48	8.06 k	MF	1	125 m	
R6	317-0683-01	68 k	C	5	125 m	
R7	317-0680-01	68	C	5	125 m	
R8	311-1468-00	10 k	CV	20	250 m	
R9	321-0093-42	90.9	MF	0.5	125 m	
R11	317-0393-01	39 k	C	5	125 m	
R12	317-0394-01	390 k	C	5	125 m	
R13	325-0123-00	10.1	MF	0.5	125 m	
R14	321-0844-48	2.2 k	MF	1	125 m	
R15	311-1345-00	50 k	CV	20	250 m	
R16	317-0562-01	5.6 k	C	6	125 m	
R17	311-1449-00	4.7 k	CP	20	75 m	
R18	321-0845-48	2.7 k	MF	1	125 m	
R19	317-0152-01	1.5 k	C	5	125 m	
R21	317-0562-01	5.6 k	C	5	125 m	
R22	317-0512-01	5.1 k	C	5	125 m	
R23	311-1449-00	4.7 k	CP	20	75 m	
R24	317-0123-01	12 k	C	5	125 m	
R25	317-0123-01	12 k	C	5	125 m	
R26	321-0845-48	2.7 k	MF	1	125 m	
R27	311-1448-00	1 k	CP	20	75 m	
R28	321-0843-48	270	MF	1	125 m	
R29	311-1445-00	100	CP	20	75 m	
R30	317-0101-01	100	C	5	125 m	
R31	321-0850-48	27 k	MF	1	125 m	
R32	321-0850-48	27 k	MF	1	125 m	
R33	307-0143-00	5.6 k	MO	5	1.5	
R34	307-0143-00	5.6 k	MO	5	1.5	
R35	317-0392-01	3.9 k	C	5	125 m	
R301	311-1909-00	22 k	CP	20	75 m	758601
R302	315-0223-01	22 k	C	5	250 m	
R304	307-0627-00	12M	CM	5	500 m	732701
R306	317-0102-01	1 k	C	5	125 m	
R307	317-0124-01	120 k	C	5	125 m	
R308	317-0331-01	330	C	5	125 m	
R309	307-0628-00	15M	CM	5	500 m	732701
R310	315-0101-02	100	C	5	250 m	709101
R311	317-0102-01	1 k	C	5	125 m	
R312	307-0184-00	15 k	MO	5	1.5 W	
R314	317-0184-01	180 k	C	5	125 m	
R315	311-2028-00	2.2M	CMP	20	1W	732701
R316	317-0273-01	27 k	C	5	125 m	
						732701
R318	302-0630-00	30M	CM	5	500 m	732701
						732701
						732701
R322	307-0629-00	20M	CM	5	500 m	732701
R323	307-0533-00	4M7	CM	5	500 m	758601
R324	307-0531-00	7.5M	CM	5	500 m	732701
R325	307-0531-00	7.5M	CM	5	500 m	732701
						732701
R327	311-1347-01	2.5 M	CV	20	250 m	

CIR REF	PART NUMBER	VALUE ohms	DESCRIPTION TYPE	TOL %	RATING W	Eff. Ser.No.
R328	316-0106-01	10 M	C	10	250 m	
R329	311-0767-00	100 k	CP	20	1	
R330	317-0102-01	1 k	C	5	500 m	
R331	301-0682-01	6.8 k	C	5	500 m	574101
R333	321-0481-48	1M	MF	1	125 m	
R351	311-1469-00	10 k	CV	20	250 m	
R352	315-0103-01	10 k	C	5	250 m	
R353	317-0183-01	18 k	C	5	125 m	
R354	317-0103-01	10 k	C	5	125 m	
R355	317-0104-01	100 k	C	5	125 m	
R356	317-0680-01	68	C	5	125 m	
R357	317-0123-01	12 k	C	5	125 m	
R358	317-0273-01	27 k	C	5	125 m	
R359	315-0153-01	15 k	C	5	250 m	
R361	317-0470-01	47	C	5	125 m	
R362	321-1325-48	24 k	MF	1	125 m	
R363	317-0123-01	12 k	C	5	125 m	
R364	317-0273-01	27 k	C	5	125 m	
R365	317-0102-01	1 k	C	5	125 m	
R366	317-0101-01	100	C	5	125 m	
R367	317-0101-01	100	C	5	125 m	
R368	317-0561-01	560	C	5	125 m	
R369	307-0599-00	5.6	CF	5	500 m	575101
R400	315-0200-01	20	CF	5	250 m	574801
R402	317-0683-01	68 k	C	5	125 m	
R403	317-0562-01	5.6 k	C	5	125 m	
R404	317-0223-01	22 k	C	5	125 m	
R405	308-0726-00	1.5	WW	10	1	
R406	308-0725-00	2.7	WW	10	1	
R407	308-0727-00	1	WW	10	1	
R408	317-0474-01	470 k	C	5	125 m	
R409	317-0100-01	10	C	5	125 m	
R410	317-0471-01	470 k	C	5	125 m	
R411	317-0332-01	3.3 k	C	5	125 m	
R412	317-0224-01	220 k	CF	5	125 m	732901
R413	307-0370-00	180	MO	5	6	
R414	315-0472-02	4.7 k	C	5	250 m	
R415	307-0144-00	10 k	MO	5	1.5	
R416	317-0562-01	5.6 k	C	5	125 m	
R417	317-0103-01	10 k	C	5	125 m	
R418	317-0822-01	8.2 k	C	5	125 m	
R419	316-0183-01	18 k	C	10	250 m	
R421	317-0104-01	100 k	C	5	125 m	
R422	317-0683-01	68 k	C	5	125 m	
R423	317-0103-01	10 k	C	5	125 m	
R424	321-0318-48	20 k	MF	1	125 m	
R425	311-1453-00	4.7 k	CMP	20	500 m	
R426	321-1325-48	24 k	MF	1	125 m	
R427	321-0871-48	6.8 k	MF	1	125 m	
R428	311-1454-00	1.5 k	CMP	20	500 m	
R429	321-1313-48	18 k	MF	1	125 m	
R431	316-0473-01	47 k	C	10	250 m	
R432	321-1353-48	47 k	MF	1	125 m	
R433	311-1453-00	4.7 k	CMP	20	500 m	
R434	321-0289-48	10 k	MF	1	125 m	

CIR REF	PART NUMBER	VALUE F	DESCRIPTION TYPE	TOL %	RATING W	Eff. Ser.No.
R601	316-0332-01	3.3 k	C	10	250 m	
R602	317-0334-01	330 k	C	5	125 m	
R603	317-0562-01	5.6 k	C	5	125 m	
R604	317-0562-01	5.6 k	C	5	125 m	
R605	317-0242-01	2.4 k	C	5	125 m	
R606	317-0242-01	2.4 k	C	5	125 m	
R607	317-0681-01	680	C	5	125 m	
R608	317-0821-01	820	C	5	125 m	
R609	311-1455-00	10 k	CP	20	50 m	
R611	321-0968-48	91	MF	1	125 m	
R612	321-0968-48	91	MF	1	125 m	
R613	317-0152-01	1.5 k	C	5	125 m	
R614	311-1456-00	470	CP	20	50 m	
R615	317-0152-01	1.5 k	C	5	125 m	
R616	317-0221-01	220	C	5	125 m	
R617	317-0183-01	18 k	C	5	125 m	
R618	317-0221-01	220	C	5	125 m	
R619	317-0221-01	220	C	5	125 m	
R621	317-0222-01	2.2 k	C	5	125 m	
R622	317-0221-01	220	C	5	125 m	
R623	317-0470-01	47	C	5	125 m	
R624	307-0173-00	470	MO	5	1.5	
R625	317-0470-01	47	C	5	125 m	
R626	317-0221-01	220	C	5	125 m	
R627	317-0221-01	220	C	5	125 m	
R628	317-0820-01	82	C	5	125 m	
R629	317-0820-01	82	C	5	125 m	
R631	307-0369-00	160	MO	5	1.5	

CIR REF	PART NUMBER	VALUE F	DESCRIPTION TYPE	TOL %	RATING W	Eff. Ser.No.
R633	307-0369-00	160	MO	5	1.5	
R634	311-1457-00	100 k	CP	20	50 m	
R635	317-0333-01	33 k	C	5	125 m	
R701	321-0095-48	95.3	MF	1	125 m	
R702	317-0101-01	100	C	5	125 m	
R703	321-0095-48	95.3	MF	1	125 m	
R704	317-0332-01	3.3 k	C	5	125 m	
R705	315-0821-01	820	C	5	250 m	
R706	311-1447-00	470	CP	20	75 m	
R707	315-0821-01	820	C	5	250 m	
R711	317-0362-01	3.6 k	C	5	125 m	
R712	317-0111-01	110	C	5	125 m	
R713	317-0121-01	120	C	5	125 m	
R714	317-0470-01	47	C	5	125 m	
R715	317-0121-01	120	C	5	125 m	
R716	307-0372-00	390	MO	5	3.5	
R717	307-0372-00	390	MO	5	3.5	
R718	317-0680-01	68	C	5	125 m	
R719	317-0680-01	68	C	5	125 m	
R721	317-0680-01	68	C	5	125 m	
R722	311-1446-00	220	CP	20	75 m	
R723	315-0103-01	10 k	C	5	250 m	
R724	307-0371-00	510	MO	5	5	
R725	307-0371-00	510	MO	5	5	
R727	311-0727-00	1 k	CP	20	1	

CIR REF	PART NUMBER	VALUE	DESCRIPTION	TYPE	TOL %	RATING	Eff. Ser.No.
S1	311-1345-00		Pull (with R15)				
S2	260-1408-00		Push 1 button				
S401	311-1469-00		Rotary (with R351)				
T301	120-0771-01		E.H.T. oscillator transformer				
T401	120-0813-00		Power transformer				
TH301	307-0258-00		130Ω Thermistor Mullard VA1040		20	500 mW	

CIR REF	PART NUMBER	DESCRIPTION		TYPE	EFF. SER. NO.
TR1	151-0326-00	BC107	Si	NPN	
TR2	151-0326-00	BC107	Si	NPN	
TR3	151-0317-00	BC109C	Si	NPN	
TR4	151-0320-01	MPS6518 Motorola	Si	PNP	
TR5	151-0320-01	MPS6518 Motorola	Si	PNP	
TR6	151-0525-00	FRB749/SPS5286	Si	NPN	
TR7	151-0525-00	FRB749/SPS5286	Si	NPN	
TR8	151-0525-00	FRB749/SPS5286	Si	NPN	
TR9	151-0525-00	FRB749/SPS5286	Si	NPN	
TR301	151-0326-00	BC107	Si	NPN	
TR302	151-0317-00	BC109C	Si	NPN	
TR303	151-0317-00	BC109C	Si	NPN	
TR304	151-0400-00	2N5191	Si	NPN	
TR351	151-0525-00	FRB749/SPS5286	Si	NPN	
TR352	151-0326-00	BC107	Si	NPN	
TR353	151-0404-00	TO203	Si	PNP	
TR354	151-0525-00	FRB749/SPS5286	Si	NPN	
TR355	151-0404-00	TO203	Si	PNP	
TR401	151-0257-01	BF305	Si	NPN	
TR402	151-0404-00	TO203	Si	PNP	
TR403	151-0326-00	BC107	Si	NPN	
TR404	151-0326-00	BC107	Si	NPN	
TR405	151-0400-00	2N5191	Si	NPN	
TR406	151-0318-00	BFY51	Si	NPN	
TR407	151-0317-00	BC109C	Si	NPN	
TR408	151-0326-00	BC107	Si	NPN	
TR409	151-0318-00	BFY51	Si	NPN	
TR411	151-0317-00	BC109C	Si	NPN	
TR412	151-0525-00	FRB749/SPS5286	Si	NPN	
TR413	151-0400-00	2N5191	Si	NPN	
TR414	151-0320-00	BFX48/MPS6518	Si	PNP	
TR415	151-0311-00	MJE340	Si	NPN	
TR416	151-0311-00	MJE340	Si	NPN	
TR601	151-0320-01	MPS6518 Motorola	Si	PNP	
TR602	151-0320-01	MPS6518 Motorola	Si	PNP	
TR603	151-0127-02	BSX20/2N2369	Si	NPN	
TR604	151-0127-02	BSX20/2N2369	Si	NPN	
TR701	151-0127-03	BSX20	Si	NPN	
TR702	151-0127-03	BSX20	Si	NPN	
TR703	151-0127-03	BSX20	Si	NPN	
TR704	151-0127-03	BSX20	Si	NPN	
TR705	151-0310-01	E1530 LL	Si	NPN	
TR706	151-0310-01	E1530 LL	Si	NPN	
V301	154-0731-00	CRT Tektronix 4651			

ASSEMBLIES

ASSEMBLY	EFF. SER. NO.	PART NUMBER	INCLUDES CIRCUIT REFERENCES
Bright-up PC128		670-2182-02	C351 to C355, D350 to D358, R353 to R359, R361 to R368, TR351 to TR355.
EHT PC148	725451	670-2393-02	C301 to C309, D301, D302, L301, R302, R304 to R318, R322, to R324, R325, R331, R333, TH301, TR301 to TR304.
Mother Board PC147		670-2392-01	C601 to C609, C611, D601 to D607, R601 to R609, R611 to R619, R621 to R629, SKT601 to SKT603, TR601 to TR604.
Power Board PC149		670-2394-00	C401 to C410, C411 to C416, D401 to D409, D411 to D417, FS401, FS402, R402, R405 to R419, R421 to R429, R431 to R434, TR401 to TR409, TR411 to TR416.
Quintupler		650-0021-00	Sealed unit
'Y' Output PC151		670-2396-00	C701 to C709, C711 to C715, D702, D703, R701 to R709, R711 to R719, R721 to R725, TR701 to TR704.
'X' Output PC150		670-2395-02	C1 to C14, D1 to D7, L1, R1 to R7, R11, R12, R14, R16 to R19, R21 to R35, TR1 to TR9.

MECHANICAL LIST

Item	Description	Part No.	Starting Ser. No.
1	Frame panel front	426-0985-02	
2	Frame side	426-0983-00	
3	Bar support	381-0373-00	
4	Chassis rear	441-1119-00	
5	Handle	367-0174-01	
6	Handle grip	367-0177-00	
7	Index handle ring	214-0512-01	
8	Index handle hub	214-0514-01	
9	Spring handle index	214-0516-00	
10	Cover handle latch	200-1562-01	
11	Trim side	101-0022-02	
12	Foot	348-0167-00	
13	Cap	200-0882-00	
14	Foot	348-0344-00	
15	Clip cable	344-0251-00	
16	Insert 4BA	377-0394-00	
17	Bezel	200-1471-01	
18	Panel front	333-1708-02	
19	Insert moulding - green	378-0597-00	
20	Knob assembly	366-1239-01	
21	Knob assembly	366-1266-00	
22	Knob assembly	366-1255-00	
23	Knob assembly	366-1254-00	
24	Screw Skt hd cup point M3 x 3	213-0128-00	
25	Knob push-button	366-1403-00	
26	Bracket lamp	407-1258-00	
27	Bulb holder	136-0311-00	
28	Spacer	361-0534-00	
29	Spacer	361-0567-00	
30	Bush	358-0460-00	
31	Plate pot mounting	386-2453-01	
32	Coupling	376-0137-01	
33	Clip spring	344-0263-00	
34	Solder tag 6BA	210-0297-00	
35	Insulator stand-off	342-0156-00	
36	Nut special 6BA	220-0682-01	
37	Bracket pot mounting	407-1213-00	
38	Nut chrome	220-0527-00	
39	Coupling flexible	376-0131-00	
40	Shaft extension	384-0497-04	
41	Coupling flexible	376-0126-00	
42	Shaft extension	384-1142-13	
43	Shaft extension	384-1142-10	
44	'P' clip brass	343-0196-00	
45	'P' clip Nx2	343-0180-00	
46	Spacer 4BA – clear	361-0197-00	
47	Filter amber	378-0812-02	
	blue tint	378-0812-01	
48	Bracket heat sink	407-1211-01	
49	Heat sink (Royal Worcester)	214-1741-00	
50	Spacer 6BA	361-0283-00	
51	'P' clip Nx2A	343-0234-00	
52	Spacer 6BA x 5 mm	385-0215-00	
53	Shield disc	214-2484-00	
54	Solder tag 2BA	210-0297-02	
55	Bracket quintupler	407-1259-00	
56	Screen eht	337-1747-00	
57	PVC edging strip	252-0607-00	
58	Clamp crt assembly	343-0408-00	
59	Panel rear	386-2452-01	
60	Solder tag 3/8" i/d	210-0275-00	
61	Fuseholder	352-0499-00	
62	Voltage selector panel	136-0315-00	
63	Plug 7 pin	134-0102-00	
64	Mains plug	134-0135-00	
65	Grommet 1/4" i/d	348-0160-00	
66	Body pda connector	204-0563-01	
67	Socket	136-0522-00	
68	Cleat	343-0191-00	
69	Cleat	343-0207-00	
70	Cabinet cover	437-0149-00	

Item	Description	Part No.	Starting Ser. No.
71	Nameplate	334-2049-00	
72	CRT support	386-2451-00	
73	Cabinet rear	437-0148-00	
74	Warning label	334-2968-00	
75	Cover warning	200-1583-00	
76	Pin fastener	214-2443-00	
77	Retainer clip	343-0631-00	
78	Pin spring	214-2444-00	
79	CRT shield	337-1748-02	
80	PVC edging strip	252-0607-00	
81	Foam rubber	252-0606-00	
82	Grommet 5/32" i/d	348-0161-00	
83	Connector edge 16 way	131-1282-01	
84	Connector edge 8 way	131-1325-01	
85	Polarising key	131-1364-00	
86	Bracket heat sink	407-1212-00	
87	Fuseholder	352-0152-00	
88	Cover	200-2208-01	
89	Spacer 6BA	129-0706-00	
90	Cleat	343-0180-00	
101	Screw 6BA pan hd x 3/16"	213-0392-00	
102	Screw 6BA pan hd x 3/16" chrome	213-0455-00	
103	Screw 6BA pan hd x 1/4"	213-0393-00	
104	Screw 6BA pan hd x 1/4" chrome	213-0643-00	
105	Screw 6BA pan hd x 5/16"	213-0394-00	
106	Screw 6BA pan hd x 5/8"	213-0433-00	
107	Screw 6BA pan hd x 3/4"	213-0673-01	
108	Screw 6BA c'sk hd x 3/16"	213-0467-00	
109	Screw 6BA c'sk hd x 3/16" chrome	213-0638-00	
110	Screw 6BA c'sk hd x 1/4"	213-0391-00	
111	Screw 6BA c'sk hd x 1/2"	213-0465-00	
112	Screw 4BA c'sk hd x 3/8"	213-0475-00	
113	Screw 4BA hex hd x 3/8" slot	213-0476-00	
114	Screw 4BA hex hd x 1/2" slot	213-0389-00	
115	Screw 4BA mush hd x 3/8" chrome	213-0583-00	
116	Screw 2BA hex hd x 2" slot	213-0553-01	
117	Screw 0BA pan hd x 5/8"	213-0762-00	
118	Screw s/t No. 2 c'sk hd x 1/4"	213-0353-00	
119	Screw s/t No. 4 pan hd x 3/16"	213-0363-00	
120	Screw s/t No. 4 pan hd x 1/4"	213-0366-00	
121	Screw s/t No. 4 pan hd x 3/8"	213-0369-00	
122	Screw s/t No. 4 c'sk hd x 3/16"	213-0362-00	
123	Screw M2 x 4 mm	213-0802-00	
126	Washer 6BA plain	210-1209-00	
127	Washer 6BA shakeproof	210-1210-00	
128	Washer 6BA crinkle	210-1208-00	
129	Washer 6BA mica	210-1141-00	
130	Washer 4BA shakeproof	210-1215-00	
131	Washer 2BA shakeproof	210-1203-00	
132	Washer 0BA plain	210-1253-00	
133	Washer 0BA crinkle	210-1273-00	
134	Wahser M2	210-1290-00	
137	Nut 6BA full	220-0716-00	
138	Nut 4BA half	220-0715-00	
139	Nut 2BA full	220-0713-00	
140	Nut 0BA half	220-0774-00	

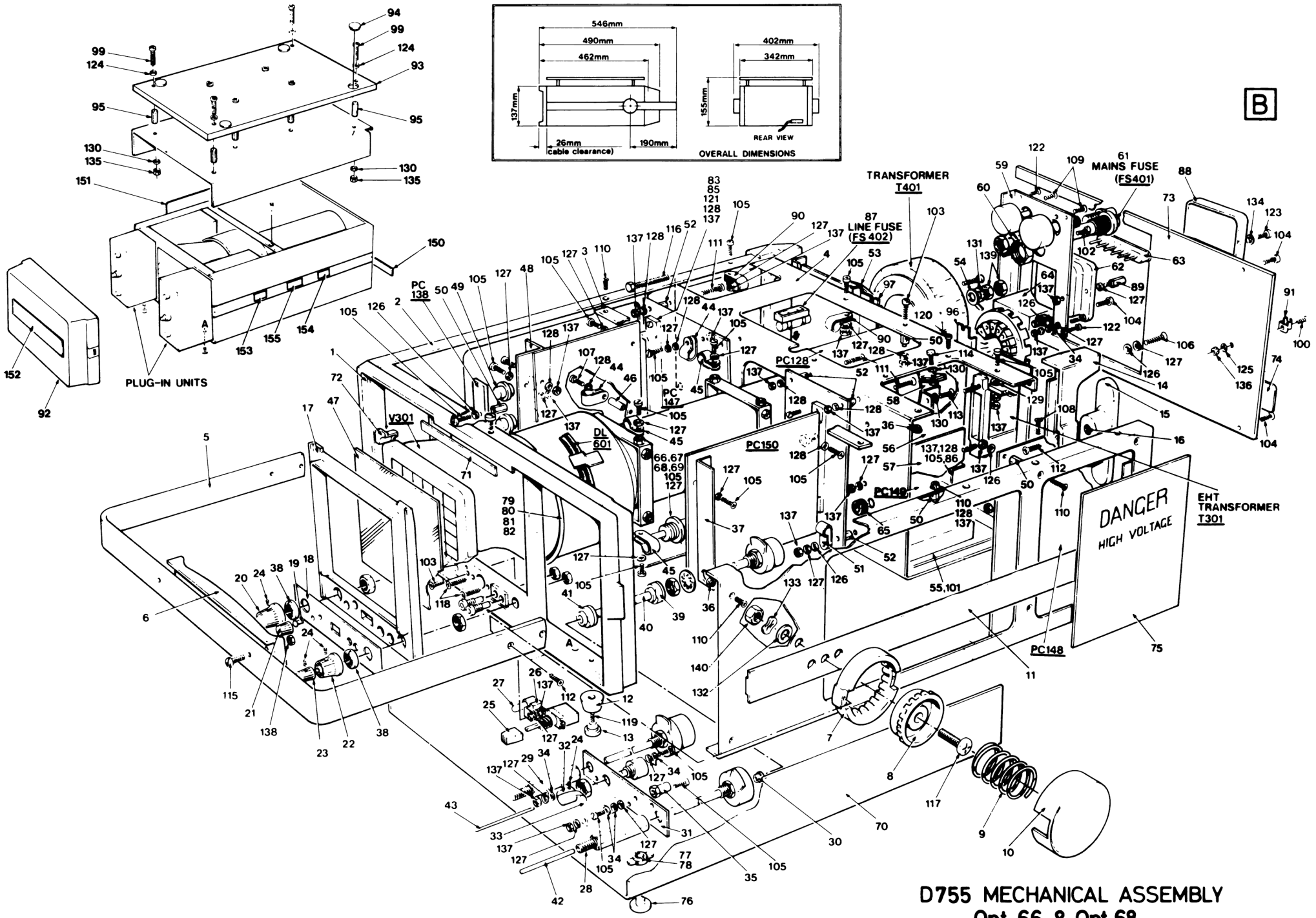

D755 MECHANICAL ASSEMBLY
Opt 66 & Opt 68

CIR REF	PART NUMBER	VALUE F	DESCRIPTION TYPE	TOL %	RATING V	Eff. Ser.No.
C601	285-0915-00	100 n	PE	20	100	
C602	285-0915-00	100 n	PE	20	100	
C603	281-0710-00	10 n	CER		250	
C604	285-1014-00	1 μ	PE	20	63	
C605	285-0858-00	1 n	PS	1	350	569001
C606	285-0858-00	1 n	PS	1	350	569001
C607	281-0858-00	1 n	PS	1	350	569001
C608	285-0858-00	1 n	PS	1	350	569001
C609	281-0710-00	10 n	CER		250	
C610	285-0887-00	In 5	PS	5	125	569751
C611	281-0710-00	10 n	CER		250	
C612	281-0710-00	10 n	CER		250	
C613	281-0710-00	10 n	CER		250	
C614	281-0155-00	2-22 p	PP		500	
C615	281-0155-00	2-22 p	PP		500	
C616	281-0155-00	2-22 p	PP		500	
C617	281-0155-00	2-22 p	PP		500	
C618	281-0710-00	10 n	CER		250	
C619	285-1014-00	1 μ	PE	20	63	
C620	285-0887-00	In 5	PS	5	125	567751
C621	285-1014-00	1 μ	PE	20	63	
C622	285-1014-00	1 μ	PE	20	63	
C623	285-1014-00	1 μ	PE	20	63	
C624	281-0803-00	8.2p	CER	±0p5	400	759101
C625	281-0803-00	8.2p	CER	±0p5	400	759101
C750	285-0854-00	100 p	PS	2 p	350	
C751	285-0800-00	10 n	PE	20	250	
C752	285-0800-00	10 n	PE	20	250	
C753	285-0810-00	820 p	PS	5	125	
C754	285-0854-00	100 p	PS	2	350	
C755	285-0800-00	10 n	PE	20	250	

CIR REF	PART NUMBER	VALUE F	DESCRIPTION TYPE	TOL %	RATING V	Eff. Ser.No.
C756	281-0710-00	10 n	CER		250	
C757	290-0623-00	4.7 μ	E		25	
C758	285-0759-00	2.2 n	PS	5	125	
C762	281-0731-00	5.6 p	CER	0.5p	750	
C763	281-0731-00	5.6 p	CER	0.5p	750	
*C900	281-0804-00	10 p	CER	5	400	
*C901	285-0772-00	100 n	PE	10	400	
*C902	281-0154-00	2-10 p	PPT		500	735301
*C903	281-0155-00	2-22 p	PP		500	
*C904	281-0155-00	2-22 p	PP		500	
*C905	281-0156-00	1.4-6.4 p	PP		500	
*C906	281-0156-00	1.4-6.4 p	PP		500	
*C907	281-0154-00	2-12 p	PP		500	
*C908	285-0872-00	180 p	PS	2	350	
*C909	283-0607-00	2 n	BM	10	500	
*C911	283-0719-00	470 p	BM	10	500	
*C912	281-0842-00	39p	CER	±5	400	
						735301
*C914	281-0154-00	2-12 p	PP		500	
*C915	281-0154-00	2-12 p	PP		500	
*C916	281-0156-00	1.4-6.4 p	PP		500	
*C917	281-0155-00	2-22 p	PP		500	
*C918	281-0154-00	2-12 p	PP		500	
*C919	283-0662-00	7.5 p	SM	0.5 p	350	
*C921	285-1017-00	10 n	PE	20	500	
C922	281-0804-00	10 p	CER	±0.5p	400	
C923	281-0804-00	10 p	CER	±0.5p	400	

*Two per unit.

CIR REF	PART NUMBER	VALUE	DESCRIPTION	TYPE	TOL %	RATING
D601	152-0565-00		EXP5072A	Si		
D602	152-0565-00		EXP5072A	Si		
D603	152-0543-00	5.1 V	Zener	Si	5	330 mW
D604	152-0545-00	10 V	Zener	Si	5	330 mW
D605	152-0554-00		BAY 74	Si		50 V
D606	152-0554-00		BAY 74	Si		50 V
D607	152-0554-00		BAY 74	Si		50 V
D608	152-0554-00		BAY 74	Si		50 V
D609	152-0062-01		1N914/1N4148	Si		75 V
D611	152-0062-01		1N914/1N4148	Si		75 V
D612	152-0062-01		1N914/1N4148	Si		75 V
D613	152-0062-01		1N914/1N4148	Si		75 V
D751	152-0062-01		1N914/1N4148	Si		75 V
D752	152-0062-01		1N914/1N4148	Si		75 V
D753	152-0062-01		1N914/1N4148	Si		75 V
D754	152-0062-01		1N914/1N4148	Si		75 V

CIR REF	PART NUMBER	VALUE	DESCRIPTION	TYPE	TOL %	RATING	Eff. Ser.No.
D755	152-0062-01		1N914/1N4148	Si		75 V	
D756	152-0062-01		1N914/1N4148	Si		75 V	
D757	152-0062-01		1N914/1N4148	Si		75 V	
D758	152-0062-01		1N914/1N4148	Si		75 V	
D759	152-0062-01		1N914/1N4148	Si		75 V	
D761	152-0062-01		1N914/1N4148	Si		75 V	
D762	152-0062-01		1N914/1N4148	Si		75 V	

CIR REF	PART NUMBER	VALUE ohms	TYPE	TOL %	RATING W	Eff. Ser.No.
*R601	311-1352-00	47 k	CV	20	250 m	
†R602	311-1352-00	47 k	CV	20	250 m	
R603	317-0224-01	220 k	C	5	125 m	
R604	317-0224-01	220 k	C	5	125 m	
R605	317-0122-01	1.2 k	C	5	125 m	
R606	317-0122-01	1.2 k	C	5	125 m	
R607	317-0101-01	100	C	5	125 m	
R608	317-0101-01	100	C	5	125 m	
R609	317-0101-01	100	C	5	125 m	
R610	317-0681-01	680	CF	5	125 m	735701
R611	317-0101-01	100	C	5	125 m	
R612	317-0472-01	4.7 k	C	5	125 m	
R613	317-0472-01	4.7 k	C	5	125 m	
R614	317-0103-01	10 k	C	5	125 m	
R615	317-0472-01	4.7 k	C	5	125 m	
R616	317-0472-01	4.7 k	C	5	125 m	
R617	317-0221-01	220	C	5	125 m	
R618	317-0221-01	220	C	5	125 m	
R619	317-0221-01	220	C	5	125 m	
R620	317-0681-01	680	CF	5	125 m	735701
R621	317-0390-01	39	C	5	125 m	
R622	317-0390-01	39	C	5	125 m	
R623	317-0390-01	39	C	5	125 m	
R624	317-0390-01	39	C	5	125 m	
R625	311-1350-00	100	CP	20	250 m	
R626	311-1350-00	100	CP	20	250 m	
R627	317-0512-01	5.1 k	C	5	125 m	
R628	317-0512-01	5.1 k	C	5	125 m	
R629	317-0472-01	4.7 k	C	5	125 m	
R631	317-0472-01	4.7 k	C	5	125 m	
R632	317-0821-01	820	C	5	125 m	
R633	317-0821-01	820	C	5	125 m	
R634	317-0821-01	820	C	5	125 m	
R635	317-0821-01	820	C	5	125 m	
R636	317-0510-01	51	C	5	125 m	
R637	317-0510-01	51	C	5	125 m	
R638	317-0510-01	51	C	5	125 m	
R639	317-0510-01	51	C	5	125 m	
**R641	311-1471-00	2.2 k	CV	20	250 m	
***R642	311-1471-00	2.2 k	CV	20	250 m	
R643	317-0473-01	47 k	C	5	125 m	
R644	317-0473-01	47 k	C	5	125 m	
R645	311-0765-00	100 k	CP	20	250 m	
R646	321-0968-48	91	MF	1	125 m	
R647	321-0968-48	91	MF	1	125 m	
R648	321-0968-48	91	MF	1	125 m	
R649	321-0968-48	91	MF	1	125 m	
R651	317-0472-01	4.7 k	C	5	125 m	
R652	317-0472-01	4.7 k	C	5	125 m	
R653	317-0472-01	4.7 k	C	5	125 m	

*† Dual pot ** with S602 ***with S603

CIR REF	PART NUMBER	VALUE ohms	TYPE	TOL %	RATING W	Eff. Ser.No.
R654	317-0472-01	4.7 k	C	5	125 m	
*R655	311-1352-00	1.5 k	CV	20	250 m	
†R656	311-1352-00	1.5 k	CV	20	250 m	
R657	321-0862-48	620	MF	1	125 m	
R658	321-0862-48	620	MF	1	125 m	
R659	321-0862-48	620	MF	1	125 m	
R661	321-0862-48	620	MF	1	125 m	
R662	315-0621-02	620	C	5	250 m	
R663	315-0621-02	620	C	5	250 m	
R664	317-0361-01	360	C	5	125 m	
R665	317-0361-01	360	C	5	125 m	
R666	317-0471-01	470	C	5	125 m	
R667	317-0471-01	470	C	5	125 m	
R668	317-0471-01	470	C	5	125 m	
R669	317-0471-01	470	C	5	125 m	
R671	317-0272-01	2.7 k	C	5	125 m	
R672	317-0272-01	2.7 k	C	5	125 m	
R673	317-0272-01	2.7 k	C	5	125 m	
R674	317-0272-01	2.7 k	C	5	125 m	
R675	317-0100-01	10	C	5	125 m	
R676	317-0100-01	10	C	5	125 m	
R677	317-0220-01	22	C	5	125 m	
R678	317-0220-01	22	C	5	125 m	
R679	317-0220-01	22	C	5	125 m	
R681	317-0220-01	22	C	5	125 m	
R682	317-0162-01	1.6 k	C	5	125 m	
R683	317-0162-01	1.6 k	C	5	125 m	
R684	317-0162-01	1.6 k	C	5	125 m	
R685	317-0612-01	1.6 k	C	5	125 m	
R686	317-0151-01	150	C	5	125 m	
R687	317-0151-01	150	C	5	125 m	
R688	311-0717-00	220	CP	20	250 m	
R689	311-0717-00	220	CP	20	250 m	
R691	307-0394-00	3.9	C	5	125 m	
R694	317-0220-01	22	C	5	125 m	
R695	317-0220-01	22	C	5	125 m	
R696	311-1481-00	47	CP	20	250 m	
R697	311-1481-00	47	CP	20	250 m	
R698	307-0481-00	4.7	C	5	125 m	
R699	307-0481-00	4.7	C	5	125 m	
R701	317-0473-01	47 k	C	5	125 m	
R702	317-0473-01	47 k	C	5	125 m	
R703	311-0765-00	100 k	CP	20	250 m	
R704	311-0995-00	680	CP	20	250 m	
R705	317-0151-01	150	C	5	125 m	
R706	317-0151-01	150	C	5	125 m	

CIR REF	PART NUMBER	VALUE ohms	DESCRIPTION TYPE	TOL %	RATING W
R751	317-0103-01	10 k	C	5	125 m
R752	317-0393-01	39 k	C	5	125 m
R753	317-0470-01	47	C	5	125 m
R754	317-0473-01	37 k	C	5	125 m
R755	317-0621-02	620	C	5	250 m
R756	317-0472-01	4.7 k	C	5	125 m
R757	317-0821-01	820	C	5	125 m
R758	315-0471-01	470	C	5	250 m
R759	317-0470-01	47	C	5	125 m
R761	317-0392-01	3.9 k	C	5	125 m
R762	317-0821-01	820	C	5	125 m
R763	317-0470-01	47	C	5	125 m
R764	317-0103-01	10 k	C	5	125 m
R765	317-0103-01	10 k	C	5	125 m
R766	317-0123-01	12 k	C	5	125 m
R767	317-0562-01	5.6 k	C	5	125 m
R768	315-0621-02	620	C	5	250 m
R769	307-0394-00	3.9	C	5	125 m
R771	315-0122-02	1.2 k	C	5	250 m
R772	317-0473-01	47 k	C	5	125 m
R773	317-0103-01	10 k	C	5	125 m
R774	317-0823-01	82 k	C	5	125 m
R786	317-0151-01	150	C	5	125 m
R787	317-0151-01	150	C	5	125 m
R788	317-0151-01	150	C	5	125 m

CIR REF	PART NUMBER	VALUE ohms	DESCRIPTION TYPE	TOL %	RATING W	Eff. Ser.No.
R789	317-0151-01	150	C	5	125 m	
R791	317-0121-01	120	C	5	125 m	
R792	317-0121-01	120	C	5	125 m	
R793	317-0332-01	3.3 k	C	5	125 m	
R794	317-0332-01	3.3 k	C	5	125 m	
R795	317-0332-01	3.3 k	C	5	125 m	
R796	317-0332-01	3.3 k	C	5	125 m	
R797	311-0851-00	1 k	CP	20	250 m	
R798	311-0851-00	1 k	CP	20	250 m	
R799	317-0181-01	180	C	5	125 m	
*R900	317-0911-01	910	CF	5	125	735301
*R901	317-0100-01	10	C	5	125 m	
*R902	321-0481-42	1 M	MF	0.5	125 m	
*R903	325-0124-00	990 k	MF	0.5	125 m	
*R904	325-0125-00	900 k	MF	0.5	125 m	
*R905	317-0470-01	47	C	5	125 m	
						735301
*R907	317-0331-01	330	C	5	125 m	
*R908	317-0100-01	10	C	5	125 m	
*R909	321-0193-42	1 k	MF	0.5	125 m	
*R910	317-0301-01	300	CF	5	125 m	735301
*R911	321-1289-42	10.1 k	MF	0.5	125 m	
*R912	321-1389-42	111 k	MF	0.5	125 m	
*R913	317-0470-01	47	C	5	125 m	
*R914	321-0970-42	500 k	MF	0.5	125 m	
*R915	325-0126-00	750 k	MF	0.5	125 m	
*R916	317-0470-01	47	C	5	125 m	
*R917	321-0481-42	1 M	MF	0.5	125 m	
*R918	316-0224-01	220 k	C	10	250 m	
*R919	321-0481-48	1 M	MF	1	125 m	
*R920	317-0100-01	10	CF	5	125 m	735301
*R921	321-0628-42	333 k	MF	0.5	125 m	

* Two per unit

CIR REF	PART NUMBER	VALUE	DESCRIPTION	TYPE	TOL %	RATING
S601	260-1429-00		Slider (Normal invert)			
S602	311-1471-00		Push-Pull (with R641 X1 - X5)			
S603	311-1471-00		Push-Pull (with R642 X1 - X5)			
S751	260-1406-00		Push (5 button)			
S752	260-1407-00		Push (3 button)			
*S901	260-1412-00		Lever (3 position)			
*S902	260-1409-00		Rotary (12 position)			
TH601	307-0403-00	4.7 Ω	Thermistor		20	
TH602	307-0403-00	4.7 Ω	Thermistor		20	

* Two per unit

CIR	PART NUMBER	DESCRIPTION		TYPE
TR601A) B)	151-1036-00	Dual fet	Si	N-channel
TR603A) B)	151-1036-00	Dual fet	Si	N-channel
TR605A) B)	151-0422-00	Dual MD2369B Motorola	Si	NPN
TR607A) B)	151-0422-00	Dual MD2369B Motorola	Si	NPN
TR609	151-0421-00	MPS 918	Si	NPN
TR611	151-0421-00	MPS 918	Si	NPN
TR612	151-0421-00	MPS 918	Si	NPN
TR613	151-0421-00	MPS 918	Si	NPN
TR614	151-0421-00	ZTX320/MPS918	Si	NPN
TR615	151-0421-00	ZTX320/MPS918	Si	NPN
TR616	151-0421-00	ZTX320/MPS918	Si	NPN
TR617	151-0421-00	ZTX320/MPS918	Si	NPN
TR618	151-0127-03	BSX20	Si	NPN
TR619	151-0127-03	BSX20	Si	NPN
TR621	151-0127-03	BSX20	Si	NPN
TR622	151-0127-03	BSX20	Si	NPN
TR751	151-0127-02	BSX20/2N2369	Si	NPN
TR752	151-0246-00	2N3904	Si	NPN
TR753	151-0127-02	BSX20/2N2369	Si	NPN
TR756	151-0320-01	MPS65 18 Motorola	Si	PNP
TR757	151-0320-01	MPS65 18 Motorola	Si	PNP
TR758	151-0320-01	MPS65 18 Motorola	Si	PNP
TR759	151-0320-01	MPS65 18 Motorola	Si	PNP

ASSEMBLIES

ASSEMBLY	PART NUMBER	INCLUDES CIRCUIT REFERENCES
Amplifier PC152	670-2557-00	C601 to C610, C611 to C618, C620, D601 to D609, D611 to D613, R603 to R624, R627 to R629, R631 to R635, R643 to R649, R651 to R654, R657 to R659, R661 to R669, R671 to R679, R681 to R689, R691, R694 to R699, R701 to R706, S601, TR601 to TR609, TR611 to TR619, TR621, TR622.
* Attenuator	011-0114-04	C901, C913, C921, PC137, R901, R905 to R907, R913 to R919, R921, S902.
PC137	670-2191-01	C902 to C909, C911, C912, C914 to C919, R902 to R908, R909, R911, R912.
Trigger PC153	670-2658-00	C750 to C759, C761 to C763, D751 to D759, D761, D762, R751, R752, R754 to R758, R761 to R765, R767 to R769, R771 to R779, R781 to R789, R791 to R798, S751, TR751, to TR753, TR756 to TR759.

* Two per unit

MECHANICAL LIST

Item	Description	Part No.	Starting Ser. No.
1	Bar	381-0335-02	
2	Panel sub-front	386-2301-00	
3	Panel front	333-1765-03	
4	Bracket rear	407-1079-00	
5	Bracket pcb	407-1080-01	
6	Shield side	337-1661-01	
7	Shield side	337-1811-00	
8	Stop	105-0347-00	
9	Post terminal	129-0374-00	
10	Nut terminal	220-0647-00	
11	Solder tag 3/8" i/d	210-0275-00	
12	Screen input	337-1753-00	
13	Bearing	401-0165-00	
14	Plate name	334-1933-02	
15	Washer special	210-1177-00	
16	Rod cranked assembly	384-0843-00	
17	Spring clip	214-1817-00	
18	Nut chrome	220-0527-00	
19	Spacer	385-0206-00	
20	Panel bush	358-0460-00	
21	Knob assembly	366-1387-00	
22	Knob assembly	366-1254-00	
23	Knob assembly	366-1266-01	
24	Knob lever	366-0215-00	
25	Knob push-button	366-1403-00	
26	Knob push-pull	366-1404-00	
27	Screw skt hd cup point M3 x 3	213-0248-00	
28	Coupling	376-0137-01	
29	Rod extension	384-1142-15	
30	Coupling 1/8" - 1/8" / 4mm - 1/8"	376-0133-00	
		376-0147-00	
31	Rod extension	384-1142-01	
32	Coupling insulated	376-0137-02	
33	Rod extension	384-1142-11	
34	Cam Assembly	401-0193-02	
35	Screen pcb	337-1687-00	
39	Screen attenuator	337-1658-00	
40	Bracket	407-1083-02	
41	Cover	200-1373-00	
42	Solder Tag 6BA	210-0297-00	
43	Strip earth contact	124-0358-00	
44	Extension shaft	384-1370-00	760301
50	Screw 8BA c'sk hd x 1/4"	213-0454-00	
51	Screw 8BA rd hd x 1/4" slot	213-0732-00	
52	Screw 6BA c'sk hd x 3/16"	213-0467-00	
53	Screw 6BA pan hd x 1/4"	213-0393-00	
54	Screw 6BA c'sk hd x 1/4"	213-0391-00	
55	Screw 6BA inst hd x 1/4" chrome	213-0644-00	
56	Screw 6BA c'sk hd x 5/16"	213-0404-00	
57	Screw 4BA pan hd x 1/4"	213-0388-00	
58	Screw 4BA c'sk hd x 5/16"	213-0387-00	
59	Screw s/t No 2 pan hd x 1/4"	213-0354-00	
60	Screw s/t No 2 c'sk hd x 1/4"	213-0353-00	
61	Screw s/t No 4 c'sk hd x 3/16"	213-0362-00	
64	Washer 6BA crinkle	210-1208-00	
65	Washer 3/8" i/d int shakeproof	210-1165-00	
68	Nut 6BA full	220-0716-00	

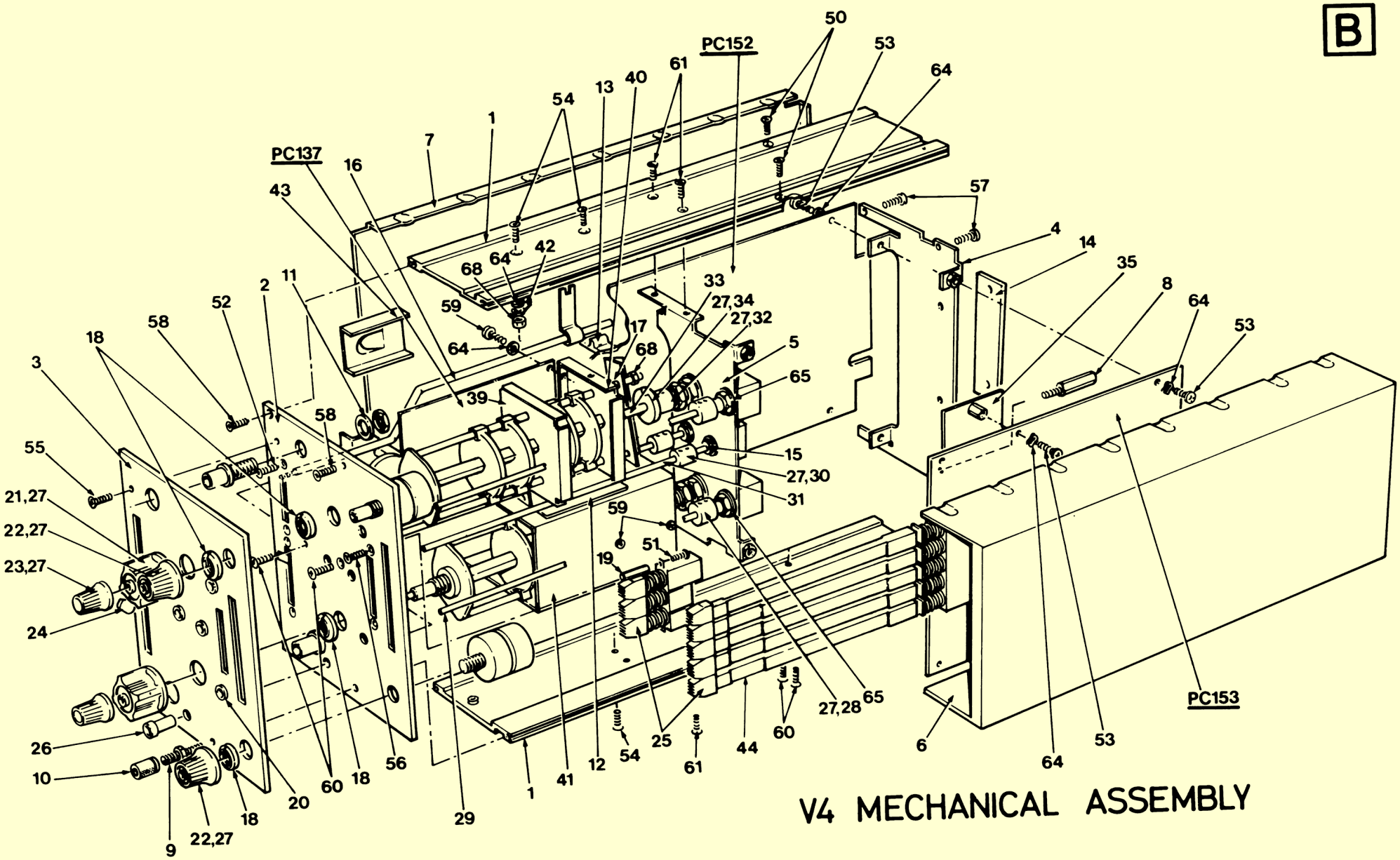

V4 MECHANICAL ASSEMBLY

ELECTRICAL

CIR REF	Part Number	Description Value F	Type	Tol %	Rating V	Eff. Ser.No
C1	285-0946-00	470 n	PE	20	250	
C2	285-0796-00	100 n	PE	20	250	
C3	290-0623-00	4.7 μ	E		40	
C4	290-0623-00	4.7 μ	E		40	
C5	290-0623-00	4.7μ	E		40	
C6	285-0915-00	100 n	PE	20	100	
C7	285-0915-00	100 n	PE	20	100	
C9	281-0710-00	10 n	CER		250	
C11	285-0847-00	560 p	PS	5	125	
C12	281-0710-00	10 n	CER		250	
C13	285-0920-00	56 p	PS	2 p	350	
C14	290-0627-00	22 μ	E		40	
C15	281-0830-00	15 p	CER	±5	400	
C16	281-0745-00	4.7 p	CER	0.5	400	539726
C17	281-0678-00	3.0 p	CER	0.25	400	539726
C61	285-0871-00	150 p	PS	5	350	
C62	290-0890-00	33μF	E	−10 +100	25	744901
C63	285-0779-00	470 n	PE	20	100	
C64	281-0710-00	10 n	CER		250	
C65	281-0828-00	12 p	CER	±5	400	
C66	281-0857-00	68 p	CER	5	50	
C68	281-0710-00	100 n	CER		250	
C71	281-0836-00	27 p	CER	±5	400	
C72	285-0836-00	47 n	PE	20	250	
C73	281-0710-00	10 n	CER		250	
C74	281-0711-00	3.9 p	CER	0.25p	750	
C75	281-0804-00	10 pf	CER	±0.5p	400	705801
C76	281-0804-00	10 p	CER	±0.5p	400	
C77	281-0710-00	10 n	CER		250	
C78	281-0833-00	20 p	PS	±5	400	
C79	285-0869-00	47 p	PS	2 p	350	
C81	285-0873-00	200 p	PS	5	350	
C150	281-0712-00	5 p	CER	0.25 p	750	
C151	285-0946-00	470 n	PE	20	250	
C152	290-0627-00	22 μ	E		40	
C153	281-0804-00	10 p	CER	±0.5p	400	
C154	290-0627-00	22 μ	E		40	
C155	285-0915-00	100 n	PE	20	100	
C156	281-0836-00	27 p	CER	±5	400	
C157	290-0623-00	4.7 μ	E		40	
C158	285-0786-00	33 p	PS	2 p	350	
C159	285-0854-00	100 p	PS	2 p	350	

CIR REF	Part Number	Description Value F	Type	Tol %	Rating V	Eff. Ser.No
C192	281-0745-00	4.7 p	CER	0.5 p	500	
C194	281-0833-00	20 p	CER	±5	400	
C195	285-0838-00	75 p	PS	2 p	350	
C196	285-0873-00	200 p	PS	5	350	
C197	290-0648-00	150 μ	E		25	
C198	285-0870-00	120 p	PS	2	350	
C199	285-0915-00	100 n	PE	20	100	
C201	281-0711-00	3.9 p	CER	0.25 p	750	
C202	290-0634-00	22 μ	E		160	
C203	285-1014-00	1 μ	PE	20	63	
C204	281-0837-00	30 p	CER	±5	400	539726
C205	281-0833-00	20 p	CER	±5	400	
C206	281-0710-00	10 n	CER	±5	250	
C207	285-0850-00	1n	PS	5	250	
C208	281-0710-00	10 n	CER		125	727851
C251	283-0721-00	900 p	SM	1	350	
C252	283-0723-00	10 p	SM	0.5 p	350	
C253	281-0738-00	20 p	CER	0.25 p	750	
C254	285-0943-00	1 μ	PC	1	63	
C255	281-0732-00	3-12 p	CT		250	
C256	283-0722-00	60 p	SM	1 p	350	
C257	285-1023-00	9 n	PC	1	400	
C271	285-0792-00	4.7 n	PE	20	125	
C272	285-0874-00	470 p	PS	5	125	
C273	281-0838-00	33 p	CER	±5	400	
C274	285-0791-00	470 n	PE	10	125	
C275	285-1023-00	9 n	PC	1	400	
C276	281-0738-00	20 p	CER	0.25 p	750	
C277	283-0721-00	900 p	SM	1	350	
C278	285-0943-00	1 μ	PC	1	63	
C279	283-0722-00	60 p	SM	1	350	
C281	281-0732-00	3-12 p	CT		250	
C282	283-0723-00	10 p	SM	0.5 p	350	

Cir Ref	Part Number	Value V	Description	Type	Tol %	Rating	Eff. Ser.No.
D1	152-0062-01		1N914/1N4148	Si		75 V	
D2	152-0062-01		1N914/1N4148	Si		75 V	
D3	152-0472-00	5·6	Zener	Si	5	330 mW	
D4	152-0062-01		1N914/1N4148	Si		75 V	
D5	152-0062-01		1N914/1N4148	Si		75 V	
D6	152-0062-01		1N914/1N4148	Si		75 V	
D7	152-0543-00	5.1	Zener	Si	5	330 mW	
D8	152-0472-00	5·6	Zener	Si	5	330 mW	
D9	152-0339-00		1N4001	Si		50 V	
D11	152-0416-00	8V2	Zener BZY88			400 mW	539726
D61	152-0062-01		1N914/1N4148	Si		75 V	
D62	152-0062-01		1N914/1N4148	Si		75 V	
D63	152-0062-01		1N914/1N4148	Si		75 V	
D64	152-0554-00		BAY74	Si		50 V	
D65	152-0062-01		1N914/1N4148	Si		75 V	
D66	152-0062-01		1N914/1N4148	Si		75 V	
D67	152-0062-01		1N914/1N4148	Si		75 V	
D68	152-0062-01		1N914/1N4148	Si		75 V	
D69	152-0541-00		BAY 82	Si		10 V	
D71	152-0483-00		25 pA leakage current at −6 V and 25°C	Si			
D72	152-0062-01		1N914/1N4148	Si		75 V	
D73	152-0062-01		1N914/1N4148	Si		75 V	
D74	152-0062-01		1N914/1N4148	Si		75 V	
D75	152-0062-01		1N914/1N4148	Si		75 V	
D76	152-0062-01		1N914/1N4148	Si		75 V	
D193	152-0062-01		1N914/1N4148	Si		75 V	
D194	152-0062-01		1N914/1N4148	Si		75 V	
D195	152-0062-01		1N914/1N4148	Si		75 V	
D196	152-0541-00		BAY 82	Si		10 V	
D197	152-0483-00		25 pA leakage current at −6 V and 25°C	Si			
D198	152-0062-01		1N914/1N4148	Si		75 V	
D199	152-0062-01		1N914/1N4148	Si		75 V	
D201	152-0466-00	15	Zener	Si	5	330 mW	
D202	152-0062-01		1N914/1N4148	Si		75 V	
D203	152-0062-01		1N914/1N4148	Si		75 V	
D204	152-0062-01		IN914	Si		75 V	
FB251	276-0597-00		Ferrite Bead Mullard FX1115				
FB271	276-0597-00		Ferrite Bead Mullard FX1115				

Cir Ref	Part Number	Value	Description
L1	108-0720-00	7·7 μH	Fixed Inductor
L2	108-0483-00	16 μH	Fixed Inductor
L61	108-0481-00	1·3 μH	Fixed Inductor

CIR REF	Part Number	Value ohms	Description Type	Tol %	Rating V	Eff. Ser.No
R1	317-0104-01	100 k	C	5	125 m	539726
R3	317-0823-01	82 k	C	5	125 m	
R4	317-0333-01	33 k	C	5	125 m	
R5	315-0433-02	43 k	C	5	250 m	
R6	317-0432-01	4.3 k	C	5	125 m	
R7	311-0735-00	10 k	CP	20	250 m	
R8	317-0911-01	910	C	5	125 m	
R9	317-0562-01	5.6 k	C	5	125 m	
R10	317-0681-01	680	C	5	125 m	539726
R11	317-0151-01	150	C	5	125 m	
R12	317-0621-01	620	CF	5	125 m	
R13	317-0750-01	75	C	5	125 m	
R14	317-0153-01	15 k	C	5	125 m	
R15	317-0123-01	12 k	C	5	125 m	
R16	317-0100-01	10	C	5	125 m	
R17	317-0392-01	3.9 k	C	5	125 m	
R18	317-0822-01	8.2 k	C	5	125 m	
R19	317-0752-01	7.5 k	C	5	125 m	
R21	317-0562-01	5.6 k	C	5	125 m	
R22	311-1575-01	7.5 k	CV	10	1 w	727851
R23	317-0101-01	100	C	5	125 m	
R24	317-0822-01	8.2 k	C	5	125 m	
R25	317-0104-01	100 k	C	5	125 m	
R26	311-0802-00	4.7 k	CP	20	250 m	
R27	317-0123-01	12 k	C	5	125 m	
R28	317-0100-01	10	C	5	125 m	
R29	317-0222-01	2.2 k	C	5	125 m	
R31	317-0750-01	75	C	5	125 m	
R32	317-0511-01	510	C	5	125 m	
R33	317-0122-01	1.2 k	C	5	125 m	
R34	317-0153-01	15 k	C	5	125 m	
R35	317-0100-01	10	C	5	125 m	
R36	311-1388-00	47	CP	20	250 m	
R37	317-0331-01	330	C	5	125 m	
R38	317-0220-01	22	C	5	125 m	
R39	317-0182-01	1.8 k	C	5	125 m	
R41	317-0271-01	270	C	5	125 m	
R42	317-0100-01	10	C	5	125 m	
R43	317-0103-01	10 k	C	5	125 m	
R62	317-0153-01	15 k	C	5	125 m	
R63	316-0185-02	1 M8	C	10	250 m	744901
R64	317-0682-01	6.8 k	C	5	125 m	
R65	317-0563-01	56 k	C	5	125 m	
R66	317-0203-01	20 k	C	5	125 m	
R67	317-0473-01	47 k	C	5	125 m	
R68	317-0101-01	100	C	5	125 m	
R69	317-0392-01	3.9 k	C	5	125 m	
R71	317-0622-01	6.2 k	C	5	125 m	
R72	317-0153-01	15 k	C	5	125 m	
R73	311-0735-00	10 k	CP	20	250 m	
R74	317-0682-01	6.8 k	C	5	125 m	
R75	317-0331-01	330	C	5	125 m	
R76	317-0332-01	3.3 k	C	5	125 m	
R77	317-0472-01	4.7 k	C	5	125 m	

CIR REF	Part Number	Value ohms	Description Type	Tol %	Rating W	Eff. Ser.No
R78	321-0291-48	10.5 k	MF	1	125 m	
R80	317-0471-01	470	C	5	125 m	
R81	317-0183-01	18 k	C	5	125 m	
R82	317-0392-01	3.89 k	C	5	125 m	
R83	317-0473-01	47 k	C	5	125 m	
R84	317-0472-01	4.7 k	C	5	125 m	
R85	321-0373-48	75 k	MF	1	125 m	
R86	317-0823-01	82 k	C	5	125 m	
R87	321-0293-48	11 k	MF	1	125 m	
R88	317-0562-01	5.6 k	C	5	125 m	
R89	321-0291-48	10.5 k	MF	1	125 m	
R90	311-0913-00	1.5 k	CP	20	250 m	
R91	311-0798-00	2.2 k	CP	20	250 m	
R92	317-0124-01	120 k	C	5	125 m	
R93	317-0104-01	100 k	C	5	125 m	
R94	317-0221-01	220	C	5	125 m	
R95	317-0201-01	200	C	5	125 m	
R96	317-0221-01	220	C	5	125 m	
R97	317-0562-01	5.6 k	C	5	125 m	
R98	317-0154-01	150 k	C	5	125 m	
R99	317-0203-01	20 k	C	5	125 m	
R100	317-0471-01	470	C	5	125 m	
R101	316-0475-01	4.7 M	C	10	250 m	
R102	317-0225-01	2.2 M	C	5	125 m	
R103	317-0433-01	43 k	C	5	125 m	
R104	317-0473-01	47 k	C	5	125 m	
R105	311-0750-00	22 k	CP	20	250 m	
R106	317-0393-01	39 k	C	5	125 m	
R107	317-0122-01	1.2 k	C	5	125 m	
R108	311-0851-00	1 k	CP	20	250 m	
R109	317-0222-01	2.2 k	C	5	125 m	
R100	317-0471-01	470	C	5	125 m	
R111	317-0243-01	24 k	C	5	125 m	
R112	317-0512-01	5.1 k	C	5	125 m	
R113	317-0105-01	1 M	C	5	125 m	
R114	317-0433-01	43 k	C	5	125 m	
R115	317-0513-01	51 k	C	5	125 m	
R116	317-0104-01	100 k	C	5	125 m	
R117	317-0753-01	75 k	C	5	125 m	
R118	317-0302-01	3 k	C	5	125 m	
R151	317-0104-01	100 k	C	5	125 m	
R152	317-0682-01	6.8 k	C	5	125 m	
*R153	311-1353-00	47 k	CV	20	250 m	
R154	317-0184-01	180 k	C	5	125 m	
R155	317-0163-01	16 k	C	5	125 m	
R156	321-1308-48	16 k	MF	1	125 m	
R157	317-0133-01	13 k	C	5	125 m	
R158	317-0241-01	240	C	5	125 m	
R159	311-0798-00	2.2 k	CP	20	250 m	
R161	315-0513-02	51 k	C	5	250 m	
R162	317-0133-01	13 k	C	5	125 m	
R163	321-1308-48	16 k	MF	1	125 m	
R164	317-0163-01	16 k	C	5	125 m	
R165	317-0822-01	8.2 k	C	5	125 m	
R166	317-0362-01	3.6 k	C	5	125 m	
R167	317-0514-01	510 k	C	5	125 m	

*With S153

Cir Ref	Part Number	Description Value ohms	Type	Tol %	Rating W	Eff. Ser.No.
R168	317-0123-01	12 k	C	5	125 m	
R169	317-0101-01	100	C	5	125 m	
R171	317-0392-01	3.9 k	C	5	125 m	
R172	317-0222-01	2.2 k	C	5	125 m	
R173	311-1388-00	47	CP	20	250 m	
R174	317-0822-01	8.2 k	C	5	125 m	
R175	317-0121-01	120	C	5	125 m	
R176	317-0392-01	3.9 k	C	5	125 m	
R177	317-0153-01	15 k	C	5	125 m	
R191	321-1353-48	47 k	MF	1	125 m	
R192	317-0392-01	3.9 k	C	5	125 m	
R193	321-1353-48	47 k	MF	1	125 m	
R194	317-0224-01	220 k	C	5	125 m	
R195	317-0182-01	1.8 k	C	5	125 m	
R196	317-0273-01	27 k	C	5	125 m	
R197	321-0276-48	7.32 k	MF	1	125 m	
R198	311-1420-00	3.3 k	WWP	10	1	
R199	311-1387-00	5 k	WWV	5	750 m	
R200	317-0221-01	220	C	5	125 m	
R201	321-0178-48	698	MF	1	125 m	
R202	311-1381-00	680	WWP	10	1	
R203	317-0392-01	3.9 k	C	5	125 m	
R204	311-0735-00	10 k	CP	20	250 m	
R205	317-0223-01	22 k	C	5	125 m	
R206	317-0272-01	2.7 k	C	5	125 m	
R207	317-0102-01	1 k	C	5	125 m	
R208	317-0271-01	270	C	5	125 m	
R209	321-1296-48	12 k	MF	1	125 m	
R211	317-0472-01	4.7 k	C	5	125 m	
R212	321-0287-48	9.53 k	MF	1	125 m	
R213	321-0298-48	12.4 k	MF	1	125 m	
R214	321-0402-48	150 k	MF	1	125 m	
R215	317-0104-01	100 k	C	5	125 m	
R216	317-0912-01	9.1 k	C	5	125 m	
R217	317-0681-01	680	C	5	125 m	
R218	317-0393-01	39 k	C	5	125 m	
R219	317-0473-01	47 k	C	5	125 m	
R221	317-0472-01	4.7 k	C	5	125 m	
R222	321-0294-48	11.3 k	MF	1	125 m	
R223	317-0123-01	12 k	C	5	125 m	
R224	317-0101-01	100	C	5	125 m	
R225	317-0101-01	100	C	5	125 m	
R226	317-0471-01	470	C	5	125 m	
R227	317-0154-01	150 k	C	5	125 m	
R228	317-0221-01	220	C	5	125 m	
R229	317-0203-01	20 k	C	5	125 m	
R230	321-0306-48	15 k	MF	1	125 m	

Cir Ref	Part Number	Description
S1	260-1403-00	Push (3-button)
S2	260-1401-00	Push (1-button)
S3	260-1402-00	Push (4-button)

Cir Ref	Part Number	Description Value ohms	Type	Tol %	Rating W	Eff. Ser.No
R231	315-0102-02	1 k	C	5	250 m	
R232	317-0133-01	13 k	C	5	125 m	
R233	321-0306-48	15 k	MF	1	125 m	
R234	317-0332-01	3.3 k	C	5	125 m	
R235	317-0362-01	3.6 k	C	5	125 m	
R236	311-0719-00	470	CP	20	250 m	
R237	317-0103-01	10 k	C	5	125 m	
R238	317-0204-01	200 k	C	5	125 m	
R239	317-0204-01	200 k	C	5	125 m	
R241	317-0822-01	8.2 kΩ	C	±5	125 mW	
R242	311-0798-00	2.2 kΩ	CP	±20	250 mW	
R243	317-0621-01	620 Ω	C	±5	125 mW	
R251	324-0616-40	7.5 M	MF	1	1	
R252	324-0544-40	4.53 M	MF	1	1	
R253	322-0498-40	1.5 M	MF	1	250 m	
R254	321-0469-48	750 k	MF	1	125 m	
R255	321-0448-48	453 k	MF	1	125 m	
R256	321-0402-48	150 k	MF	1	125 m	
R257	321-0402-48	150 k	MF	1	125 m	
R258	321-0402-48	150 k	MF	1	125 m	
R259	317-0103-01	10 k	C	5	125 m	
R261	311-1868-00	22 k	CV	20	250 m	
R271	317-0302-01	3 k	C	5	125 m	
R272	317-0332-01	3.3 k	C	5	125 m	
R273	317-0562-01	5.6 k	C	5	125 m	
R274	317-0183-01	18 k	C	5	125 m	
R275	321-0355-48	48.7 k	MF	1	125 m	
R276	324-0594-40	15 M	MF	1	1	
R277	324-0616-40	7.5 M	MF	1	1	
R278	324-0544-40	4.53 M	MF	1	1	
R279	322-0498-40	1.5 M	MF	1	250 m	
R281	321-0469-48	750 k	MF	1	125 m	
R282	321-0448-48	453 k	MF	1	125 m	
R283	321-0402-48	150 k	MF	1	125 m	
R284	317-0154-01	150 k	C	5	125 m	
R285	311-1355-00	100 k	CV	20	250 m	
R286	317-0223-01	22 k	C	5	125 m	
R287	321-0402-48	150 k	MF	1	125 m	
R288	317-0921-01	9.1 kΩ	C	±5	125 m	
R289	321-0402-48	150 k	MF	1	125 m	
RL191	148-0106-00	Relay NF4 - 24 V DC (Thorn)				

Cir Ref	Part Number	Description
S61, S62	260-1405-00	Push (3-button)

Cir Ref	Part Number	Description
S151	260-1401-00	Push (1-button)
S152	260-1400-00	Push (2-button)
S153	311-1353-00	Rotary (with R153)

Cir Ref	Part Number	Description
S191, S192	260-1499-00	Push (5-button)
S193		Switch pull to make (Part of R261)
S251	260-1410-01	Rotary (23-position)
S271	260-1410-01	Rotary (23-position)

Cir Ref	Part Number	Value	Description	Tol.	Rating
TH1	307-0270-00	330 Ω	Thermistor	20%	500 mW

Cir Ref	Part Number	Description		
TR1	151-0242-00	2N3904	Si	NPN
TR2	151-0320-00	MPS6518/BFX48	Si	PNP
TR3	151-0242-00	2N3904	Si	NPN
TR4	151-0242-00	2N3904	Si	NPN
TR5	151-0320-00	MPS6518/BFX48	Si	PNP
TR6	151-0127-02	BSX20/2N2369	Si	NPN
TR7	151-0127-02	BSX20/2N2369	Si	NPN
TR61	151-0445-00	ZTX214C	Si	PNP 744901
TR62	151-0445-00	ZTX214C	Si	PNP 744901
TR63	151-0242-00	2N3904	Si	NPN
TR64	151-0242-00	2N3904	Si	NPN
TR65	151-0320-00	MPS6518/BFX48	Si	PNP
TR66	151-1062-00	FET Telequipment spec.	Si	N-Channel
TR67	151-0242-00	2N3904	Si	NPN
TR68	151-0317-00	BC109C	Si	NPN
TR69	151-0242-00	2N3904	Si	NPN
TR151	151-0242-00	2N3904	Si	NPN
TR152	151-0242-00	2N3904	Si	NPN
TR153	151-0320-00	MPS6518/BFX48	Si	PNP
TR154	151-0127-02	BSX20/2N2369	Si	NPN
TR155	151-0127-02	BSX20/2N2369	Si	NPN
TR191	151-0320-00	MPS6518/BFX48	Si	PNP
TR192	151-0320-00	MPS6518/BFX48	Si	PNP
TR193	151-0320-00	MPS6518/BFX48	Si	PNP
TR194	151-0320-00	MPS6518/BFX48	Si	PNP
TR195	151-0320-00	MPS6518/BFX48	Si	PNP
TR196	151-1062-00	FET Telequipment spec.	Si	N-Channel
TR197	151-0242-00	2N3904	Si	NPN
V61	150-0105-00	Neon capless 34L		

ASSEMBLIES

Assembly	Part Number	Includes Circuit References
'A' Sweep & Trigger	670-2186-04	C1 to C4, C6 to C9, C11 to C17, C61 to C68, C71, C73, C74 to C79, C81, D1, D2, D4 to D7, D9, D11, D61 to D69, D71 to D74, D76, L1, L61, R1 to R6, R8 to R11, R13 to R19, R21, R23 to R29, R31 to R37, R38, R39, R41 to R43, R62 to R69, R71 to R79, R81 to R89, R92 to R99, R100 to R109, R111 to R118, S1 to S3, TR1 to TR7, TR61 to TR69
'A' TIME/DIV switch	262-0958-00	C271 to C279, C281, C282, R287, R288, R289
'B' Sweep & Trigger PC188	670-3681-00	C5, C151 to C159, C192 to C199, C201 to C205, C207, C209, D3, D81, D193 to D199, D201 to D204, R10, R151, R154 to R209, R211 to R216, R219, R221 to R225, R227 to R239, R241 to R243, RL191, S151, S152, TR151 to TR155.
'B' TIME/DIV switch	262-0959-00	C251 to C257, R251 to R258
Reset Lamp PC140	670-2354-00	V61
Timing Resistor PC136	670-2190-00	R271 to R279, R281 to R283

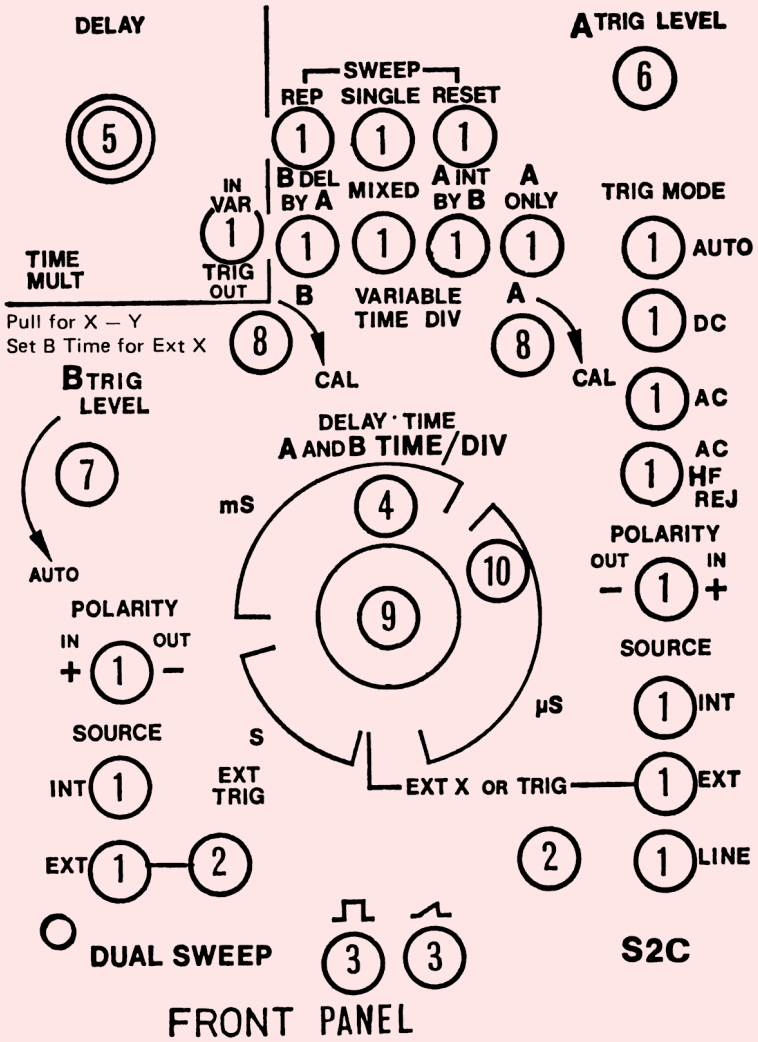

FRONT PANEL

MECHANICAL

Part Number	Description	Location
136-0343-00	Base Transistor, T018	PCB
136-0344-00	Base Transistor, 4 pin	PCB
366-1403-00	Button, Push	1
343-0191-00	Clamp, Cable	
131-0650-01	Connector, Bulkhead Socket BNC	2
131-1268-00	Connector, Single Pole 2 mm	3
131-0649-00	Connector, Male BNC	Accessory
331-0316-00	Dial, Time/Div	4
331-0317-00	Dial, Turns Counting	5
210-0735-00	Eyelet, L.613	PCB
210-0739-00	Eyelet, L.737	PCB
003-0674-00	Key, Allen 1·5 mm A/F	6 - 10
003-0704-00	Key, Nut Locking	5
003-0745-00	Key, Special Allen	5
366-1238-00	Knob, Grey/Black	6
366-1239-00	Knob, Grey/Black	7
366-1266-00	Knob, Grey/Black	8
366-1289-00	Knob, Grey/Red	9
366-1386-00	Knob, Transparent	10
220-0527-00	Nut, Chrome	6 - 10
004-1143-00	Packaging	Accessory
373-0249-00	Screw, Socket, 3 x 3 mm	6 - 10
385-0206-00	Spacer, 6 BA/8 BA x ·5"	1
361-0478-00	Spacer, Special	4
105-0347-00	Stop	Rear of Mod.
343-0198-00	Strap, Cable Insuloid	
210-0275-00	Tag, Solder, ⅛"	
210-1177-00	Washer	6

CHAPTER 6
CIRCUIT DIAGRAMS

To facilitate cross referencing between the chapters, a colour code has been adopted. The colour quoted in the reference relates to that section in this Chapter.

To minimize the risk of misinterpretation of component values on the circuit diagrams, the decimal point has been replaced by the multiplier or sub-multiplier of the basic unit. For instance, 2.2 megohms is shown as 2M2 and 1.8 picofarads is shown as 1p8.

To aid the reader further to locate a component in the circuit diagrams, a table is provided at the top of each circuit diagram, in which the circuit reference will appear, where practicable, directly above the component being sought.

PRINTED CIRCUIT

Blue shows the rear track as seen through the board. Yellow the component side track.

WAVEFORMS

Waveforms, illustrated in the sections may be monitored at the point with the corresponding number in the respective section.

RESISTORS	601 602 603 604 605 606 607 608 609 611 612 613 614 615 616 617 618 619 621 622 623 624 625 626 627 628 629 631 633 634 635
CAPACITORS	601 602 603 604 605 606 607 608 609 611
MISC.	SK601 D606 SK602 D601 D602 D603 D604 D605 TR601 TR602 D607 SK603 TR603 TR604

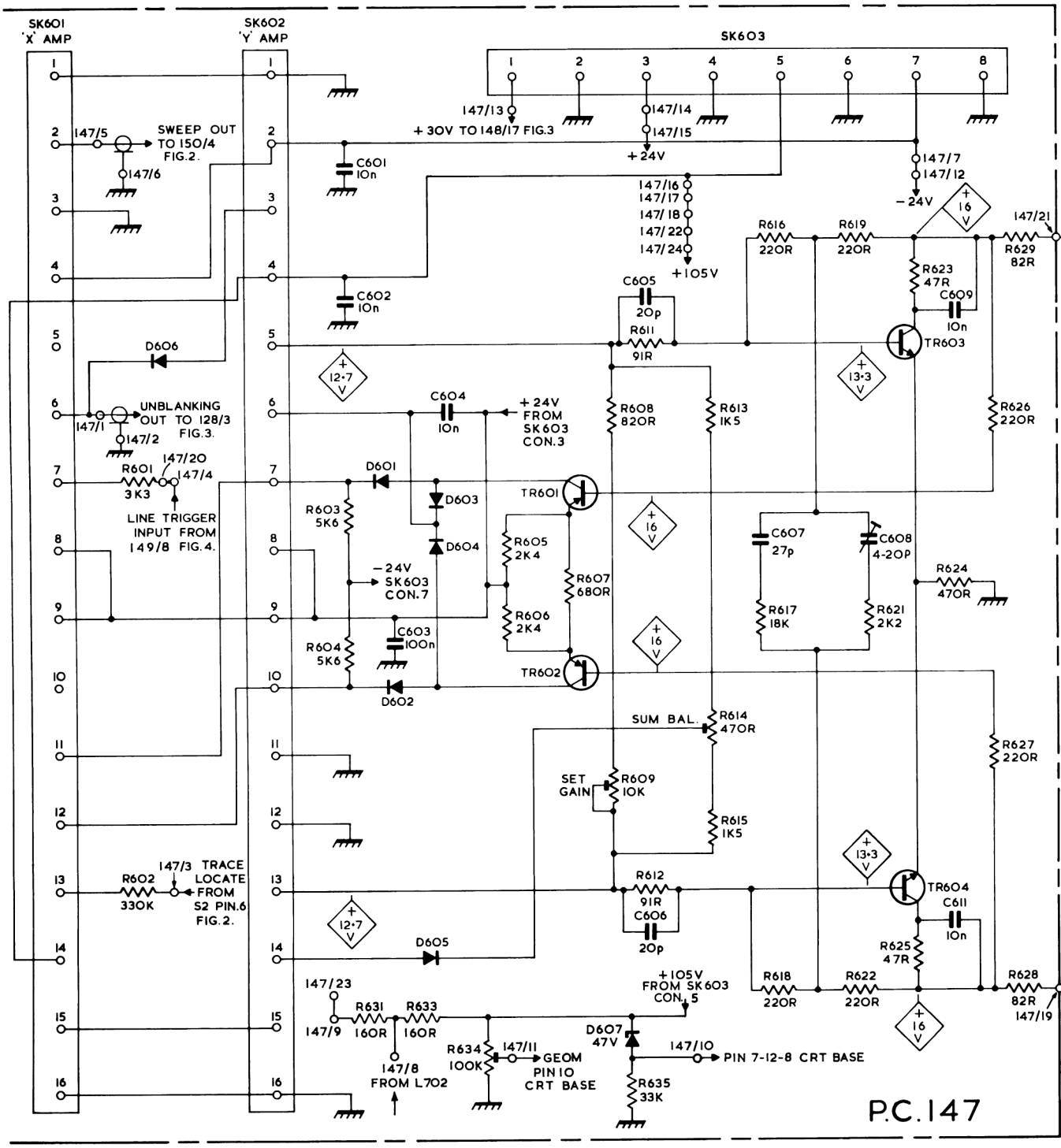

NOTES.

1. * DENOTES COMPONENTS NOT MOUNTED ON P.C. BOARD.
2. 124/2 DENOTES P.C. BOARD/EYELET OR TERMINAL No.

	701 704 702 705 703 706 707 711 712 713 714 715 709 716 717 718 719 721 722 723 724 725 727
	701 702 703 704 705 706 707 708 709 711 712 713 714 715
DL601	L701 TR701 TR702 TR703 TR704 D702 D703 TR705 TR706 D704 L702 D705

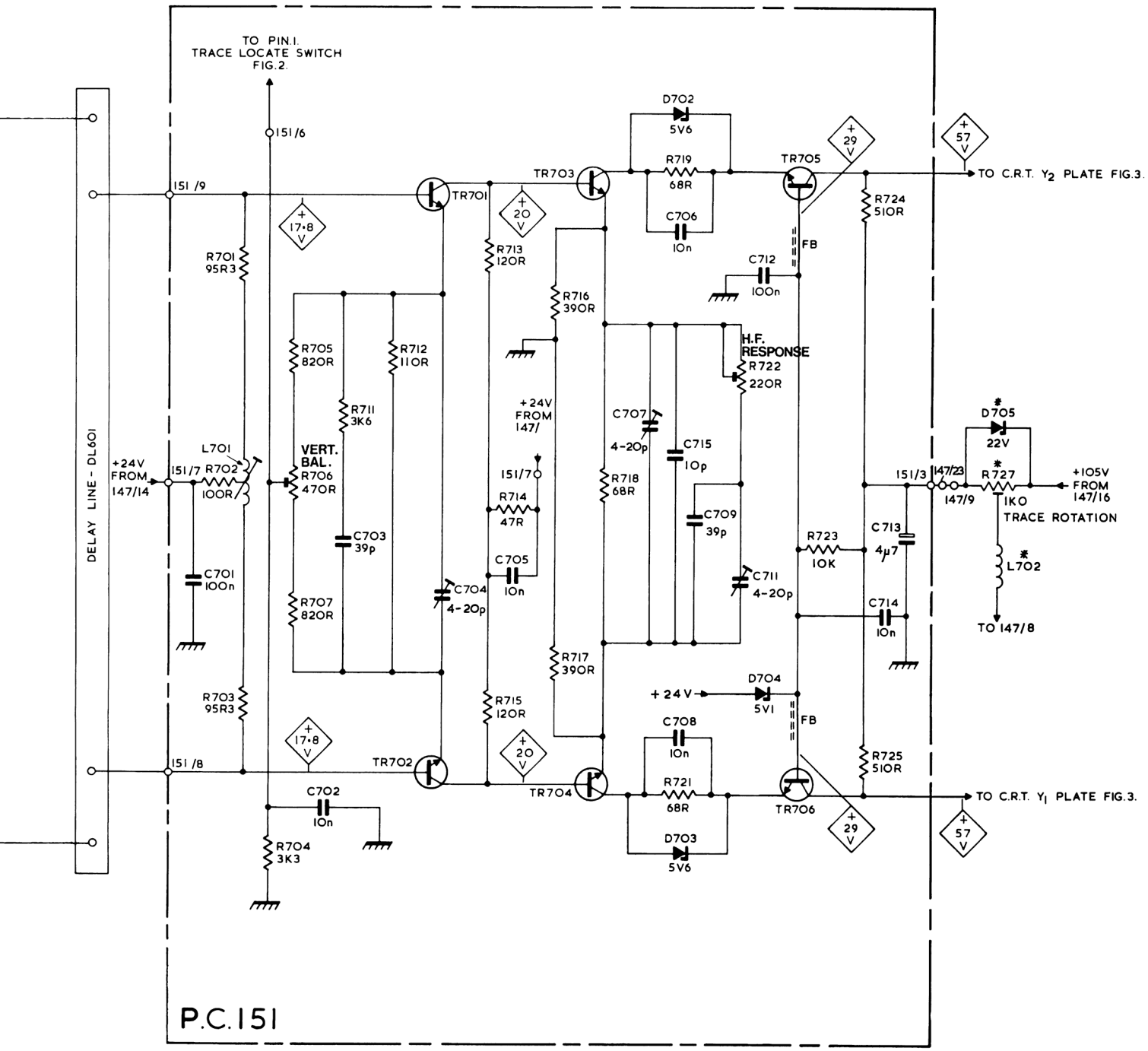

MAIN 'Y' AMPLIFIER **D755** FIG.1

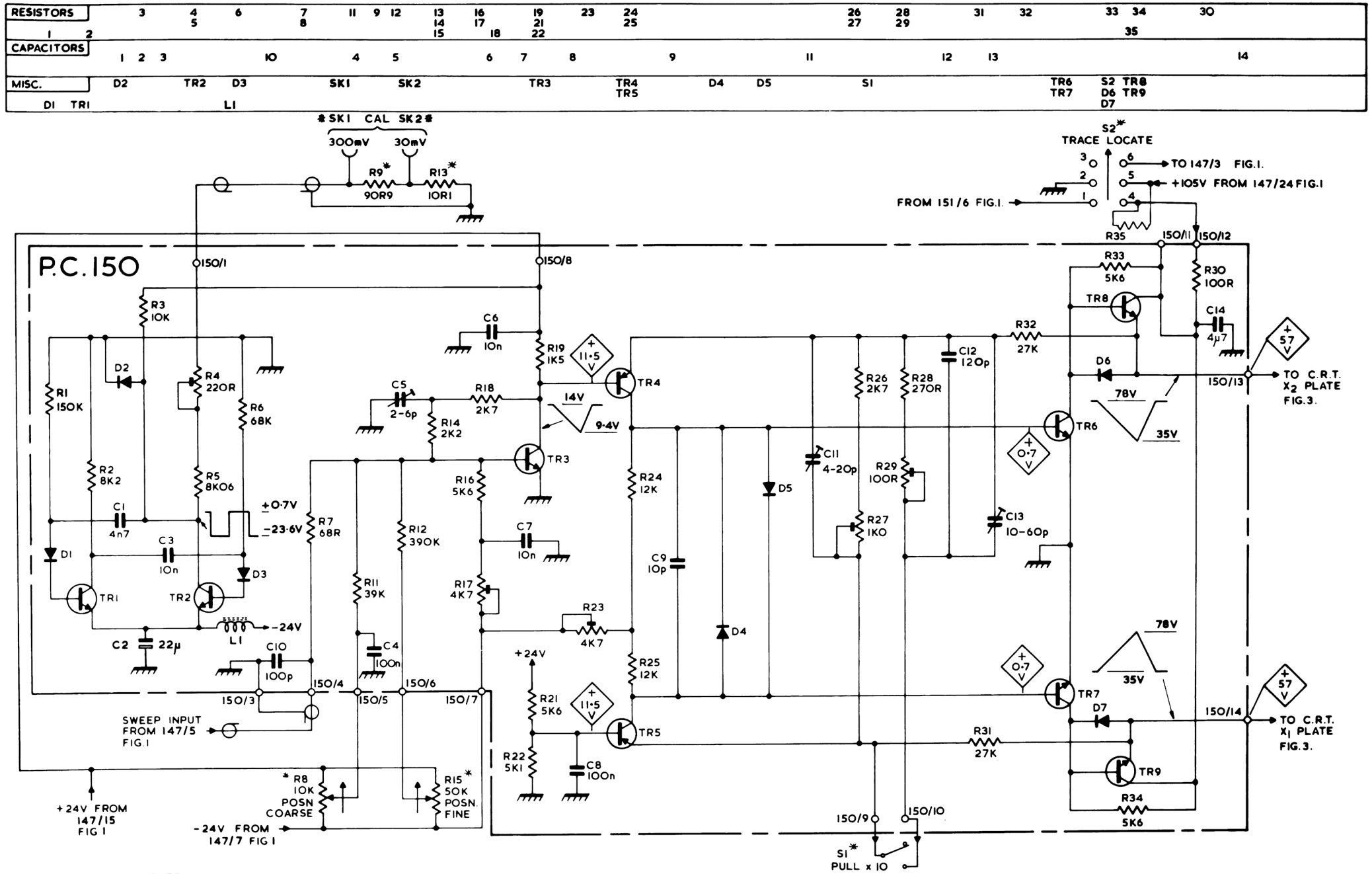

NOTES
1 * DENOTES COMPONENTS NOT MOUNTED ON P.C. BOARD.
2 150/2 DENOTES P.C. BOARD/EYELET OR TERMINAL No.

X AMPLIFIER & CALIBRATOR – D755

FIG. 2.

3L 075

RESISTORS	301 302 333 304 351 305 306 307 308 309 311 312 313 353 354 355 356 310 357 358 359 361 362 363 314 315 316 364
CAPACITORS	301 302 303 351 304 352 305 353 306 307 308 354 309
MISC.	SK351 D301 TR301 TR302 TR303 D302 D351 TR304 TH301 TR351 D350 T301 TR352 D352 D357 TR353 D353 D303 D304 D354 D355 D358

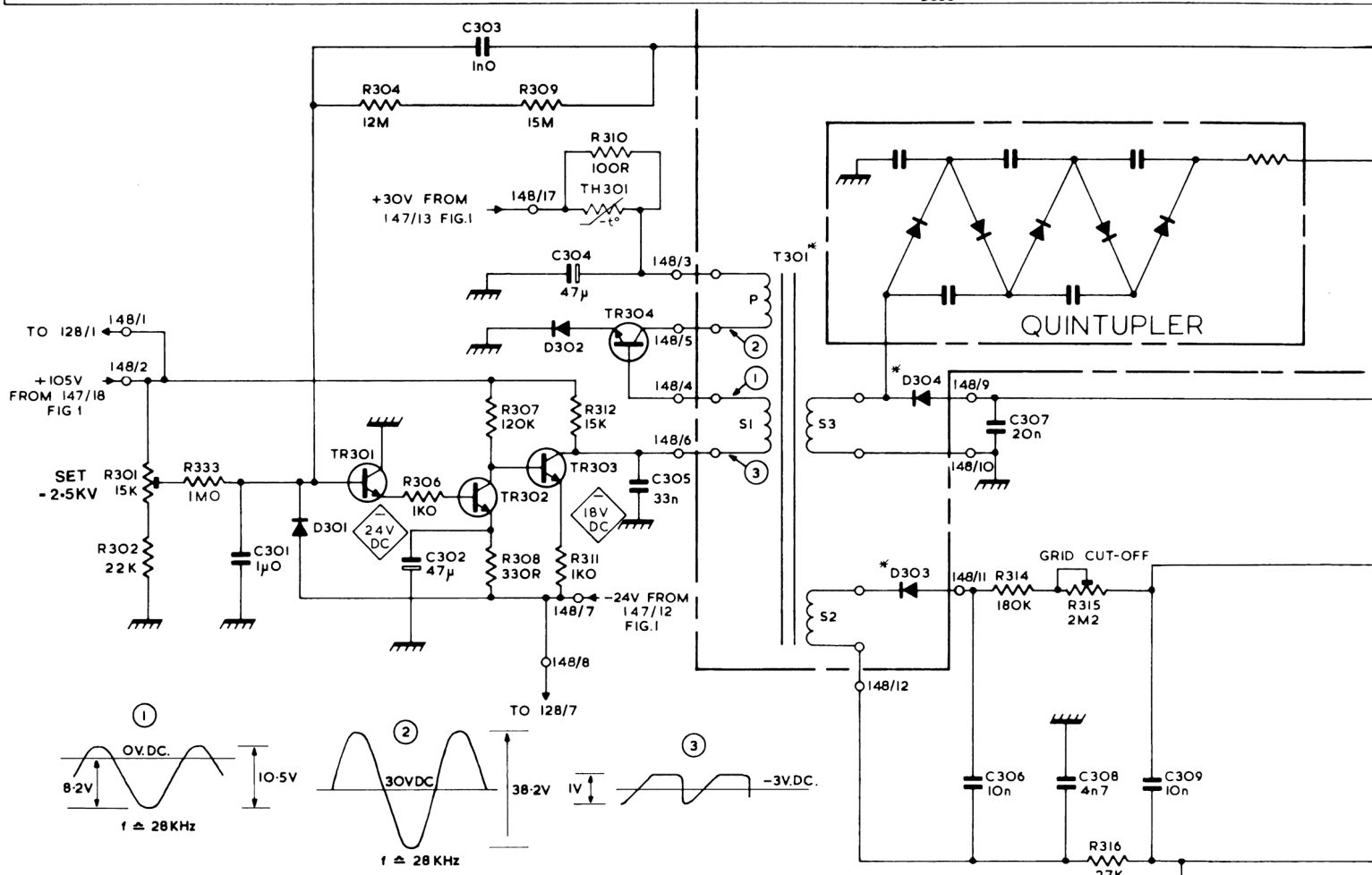

P.C.148

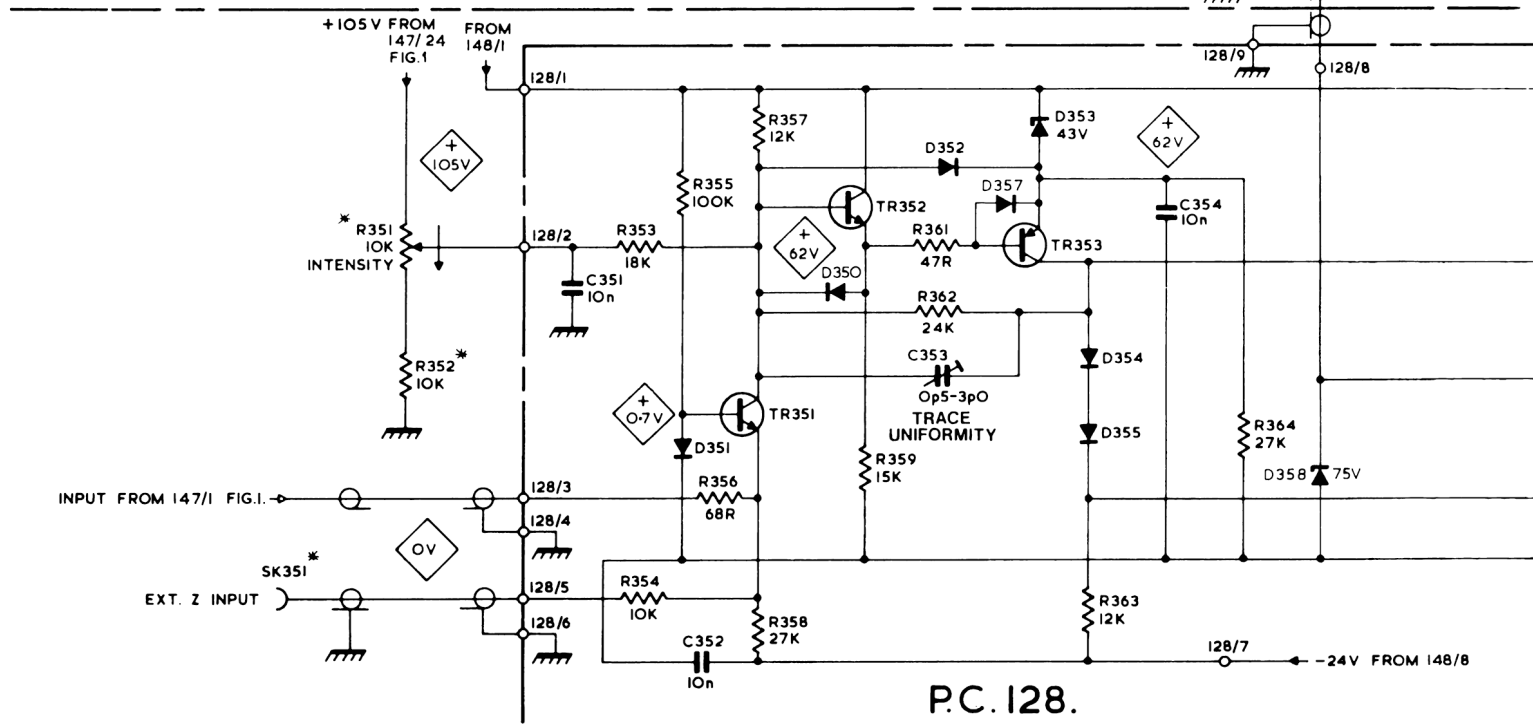

P.C.128.

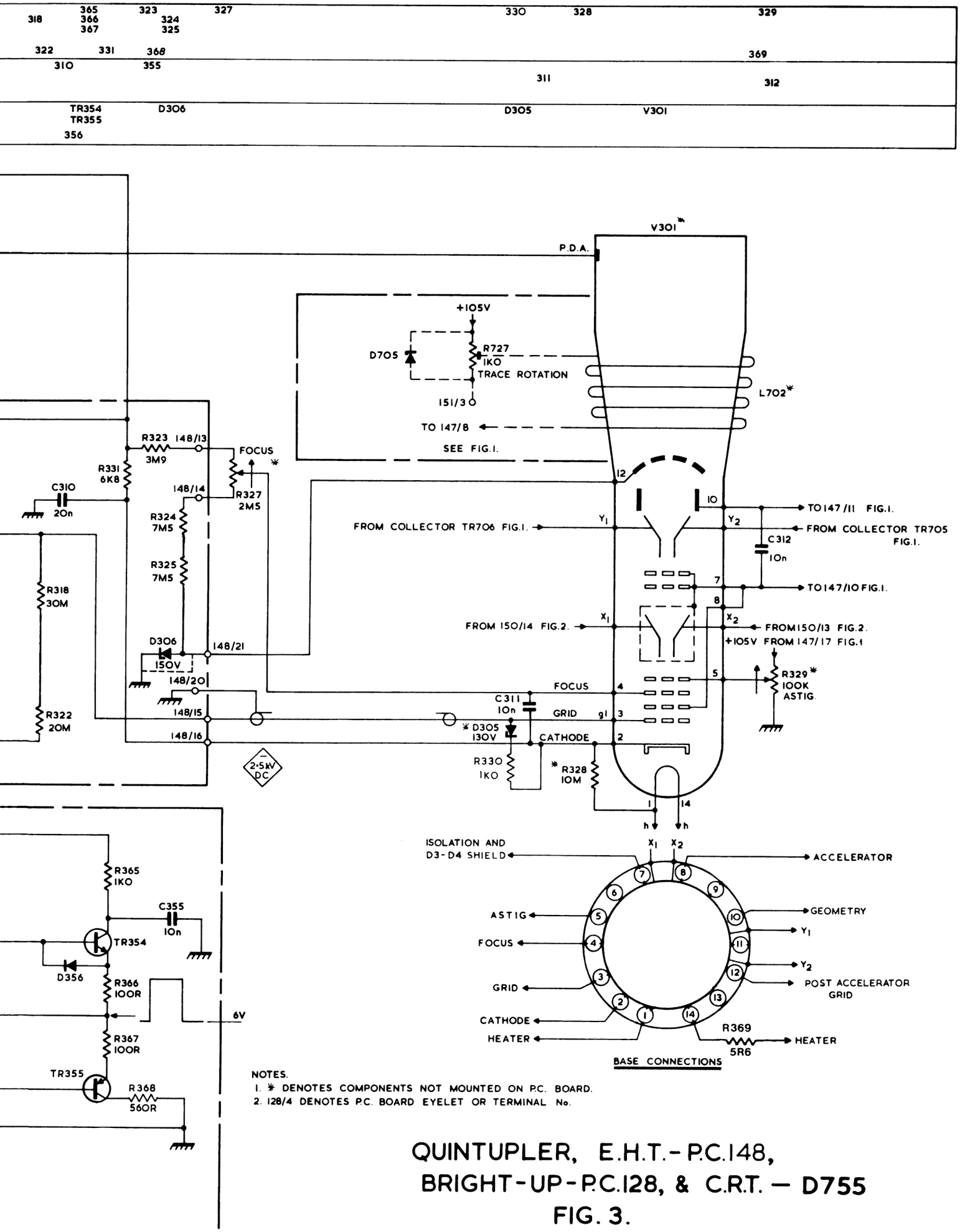

NOTES.
1. * DENOTES COMPONENTS NOT MOUNTED ON P.C. BOARD.
2. 128/4 DENOTES P.C. BOARD EYELET OR TERMINAL No.

QUINTUPLER, E.H.T.-P.C.148, BRIGHT-UP-P.C.128, & C.R.T. — D755

FIG. 3.

3R
10/78

RESISTORS				R400		402 403 404	409	408 406 407 405	410	411
CAPACITORS				401 402 403		404 405 406			410 407	
MISC.	FS401	S401	T401	LP401	D401 D405 D409 D402 D406 D411 D403 D407 D412 D404 D408 D413		TR401 FS402 TR402 TR403			D414 D415

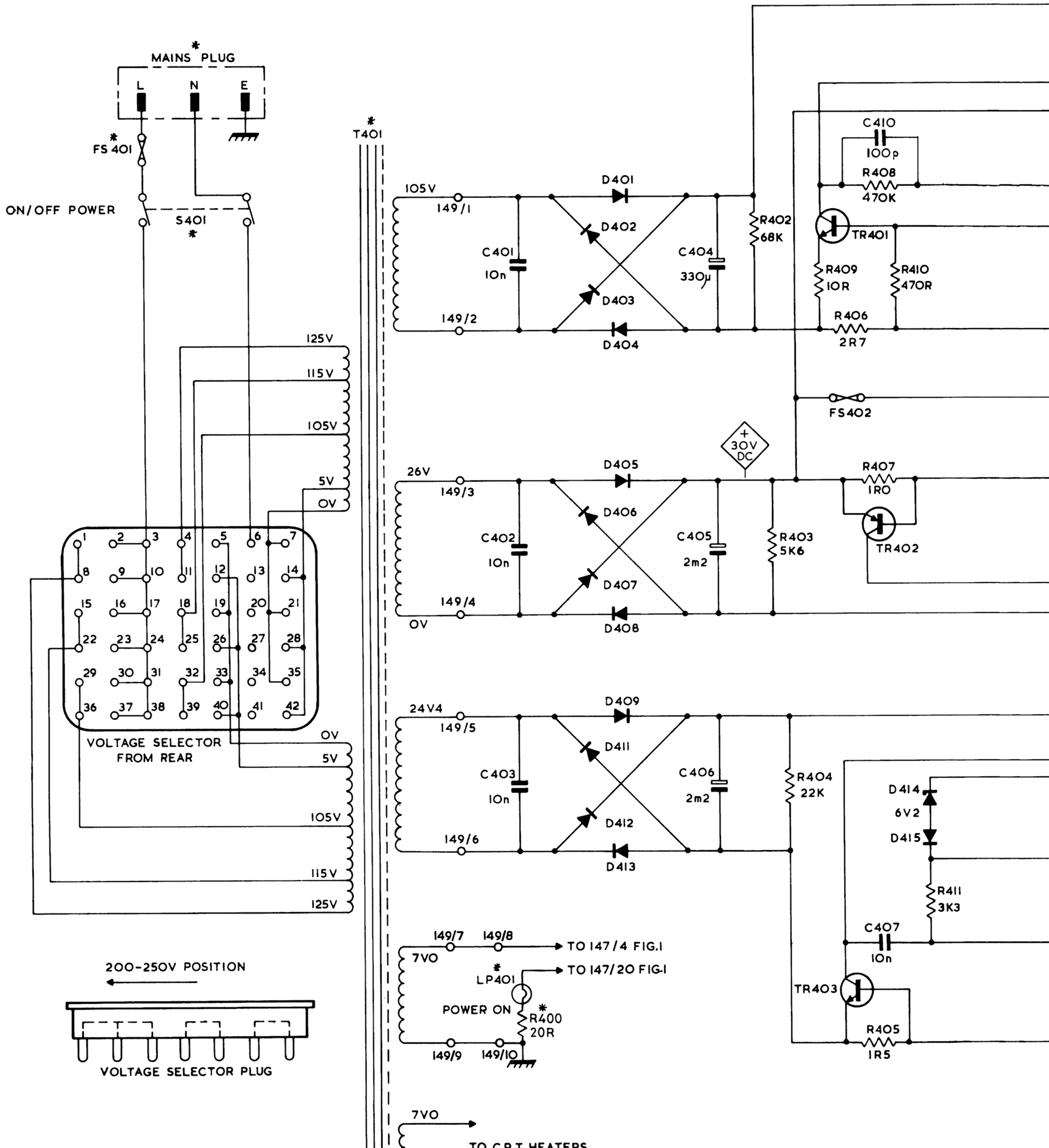

NOTES.

1. ✱ DENOTES COMPONENTS NOT MOUNTED ON PC BOARD
2. 149/2 DENOTES PC BOARD / EYELET OR TERMINAL No

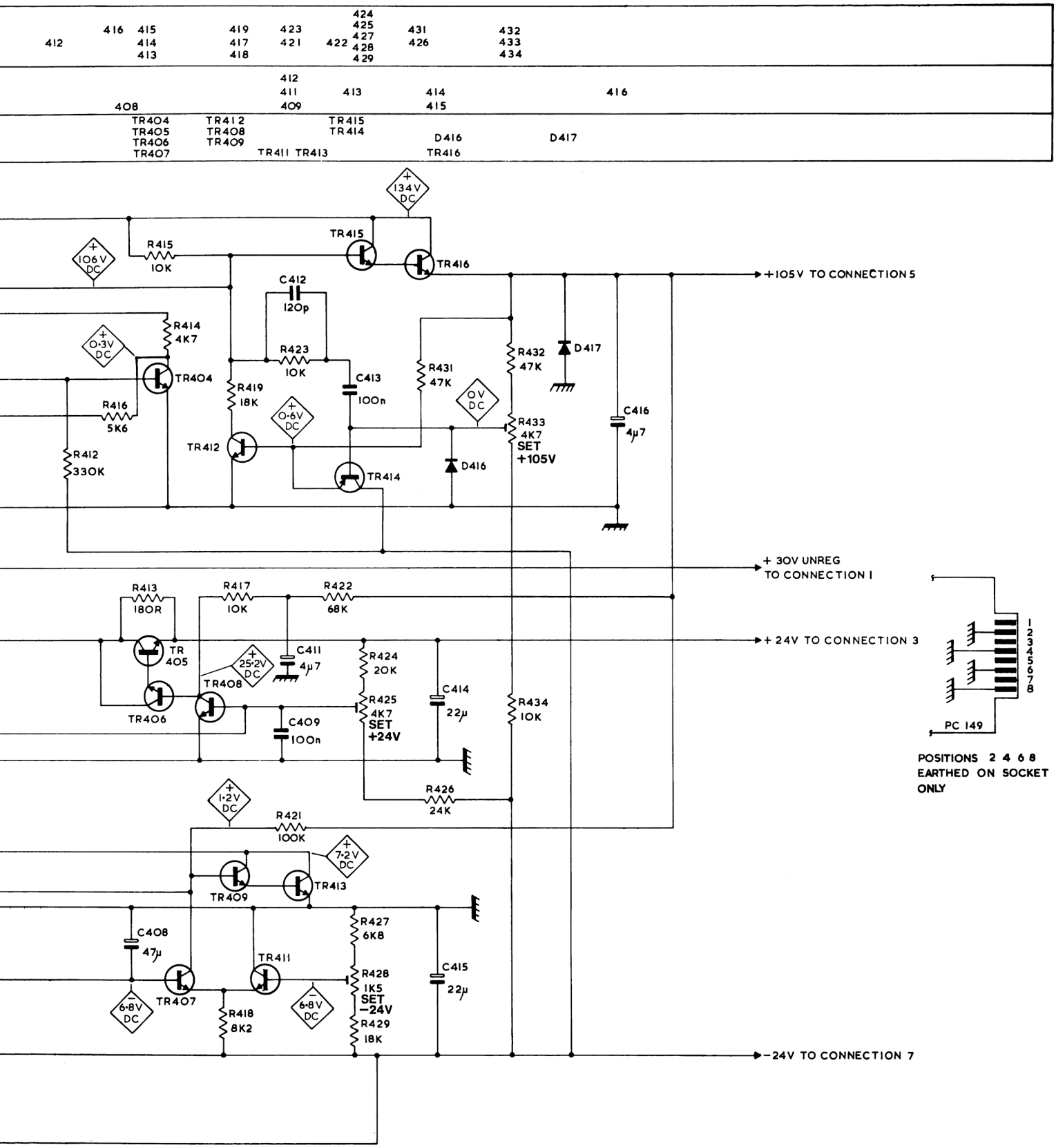

POWER SUPPLY PC149 **D755** FIG. 4

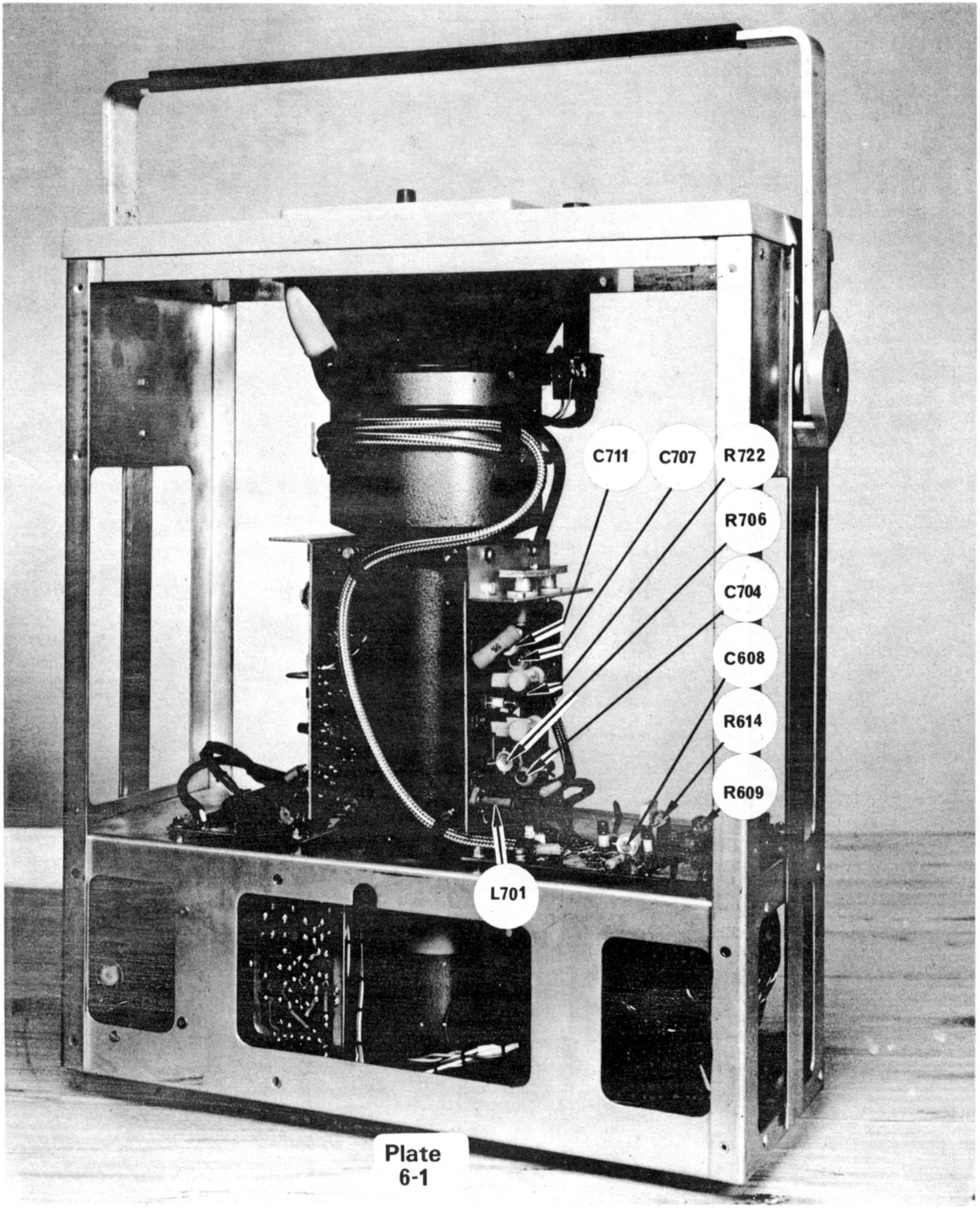

Plate
6-1

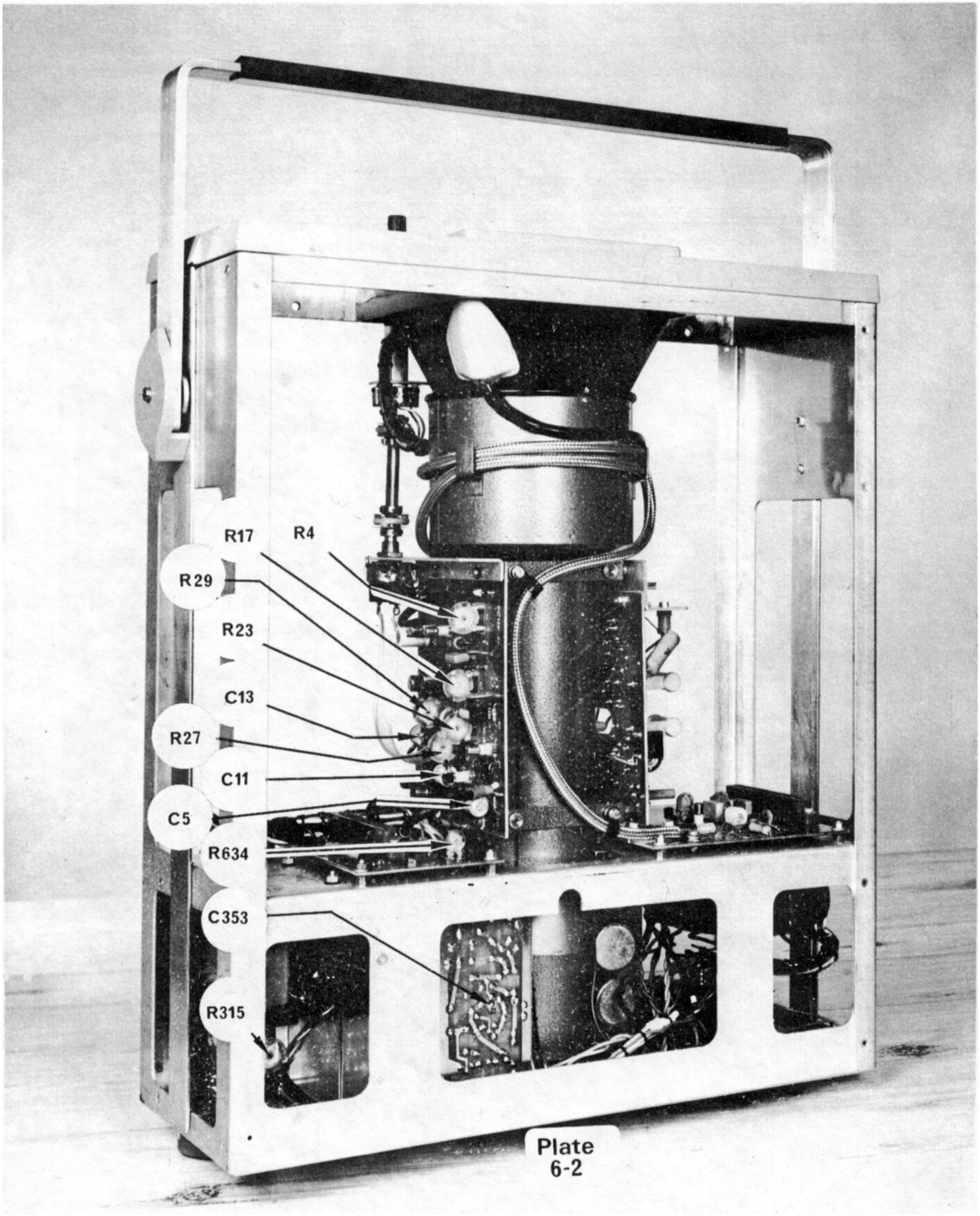

Plate
6-2

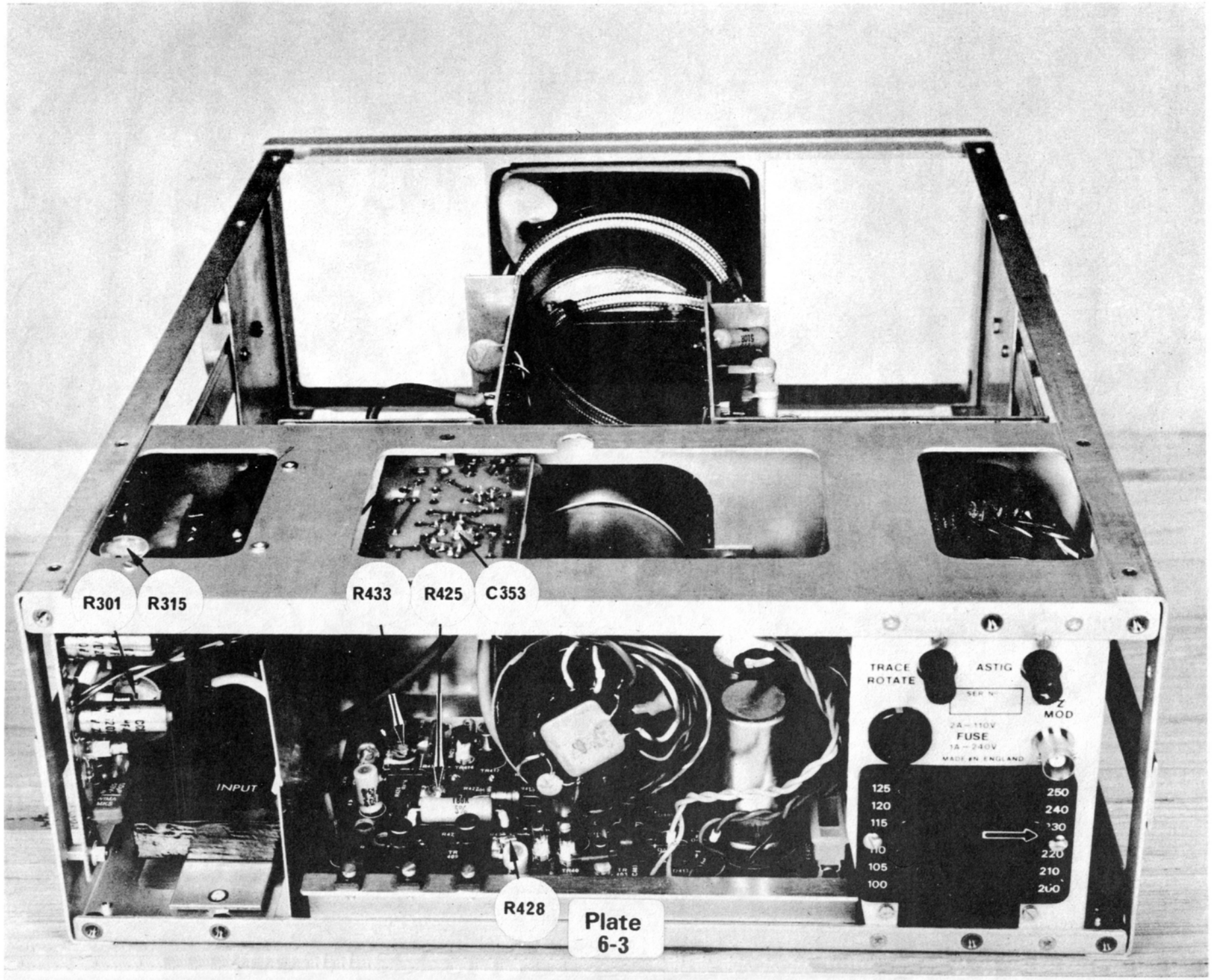
R301
R315
R433
R425
C353
R428
INPUT
TRACE
ROTATE
ASTIG
Z
MOD
FUSE
MADE IN ENGLAND
125
120
115
110
105
100
250
240
230
220
210
200

Plate 6-3

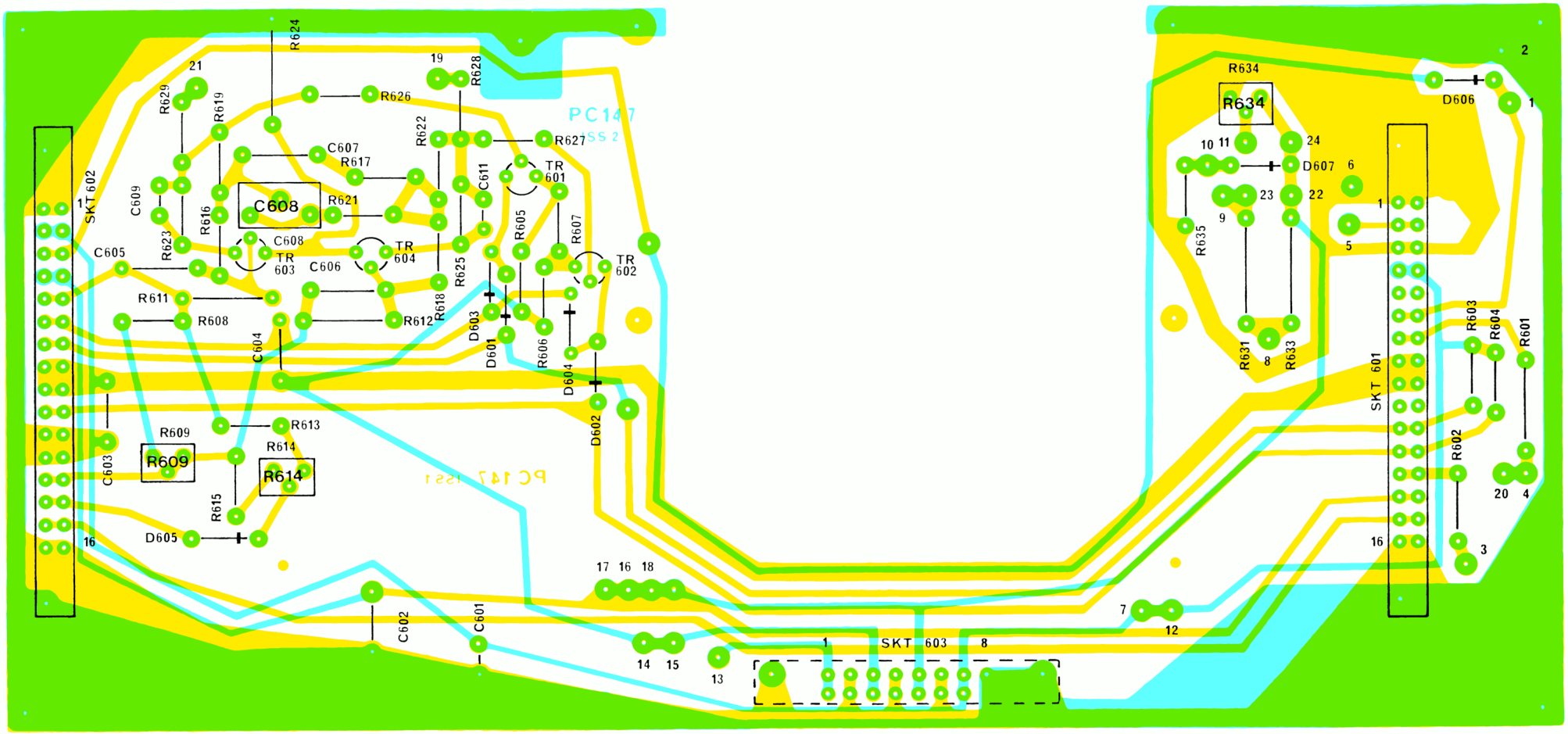

PC 147

COMPONENT REFERENCE FIG 5

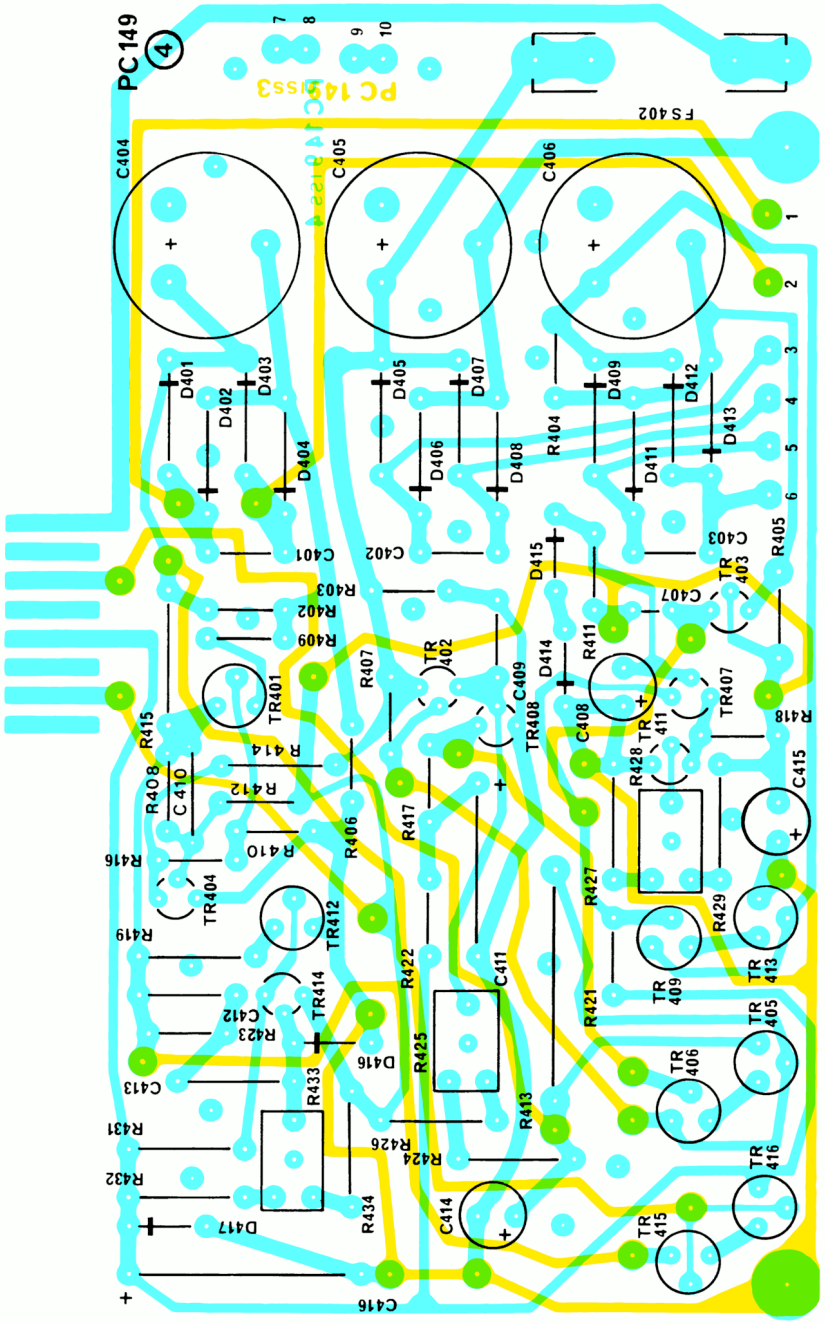

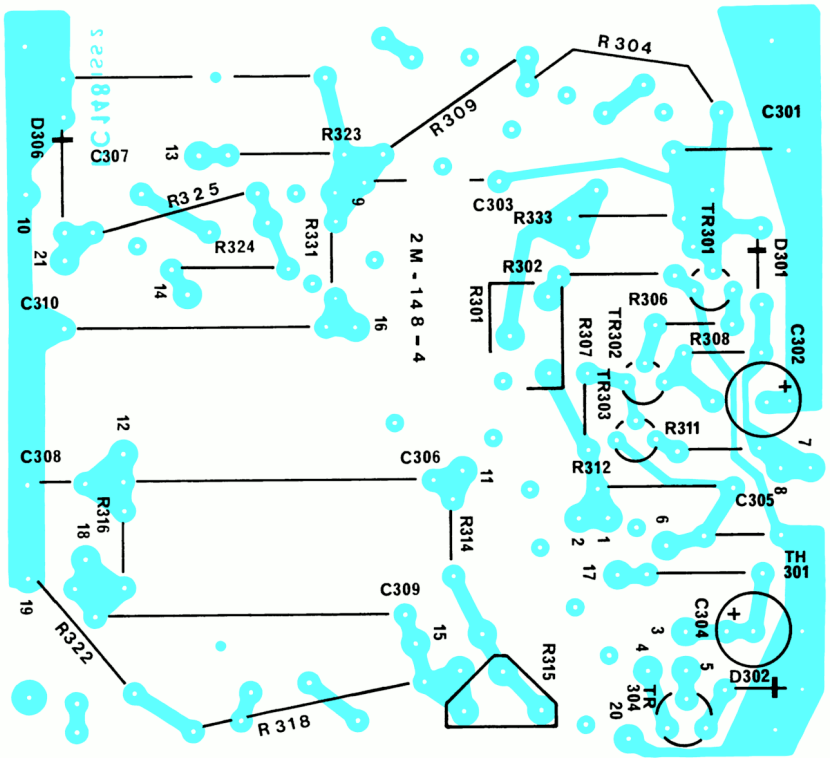

COMPONENT REFERENCE FIG 6

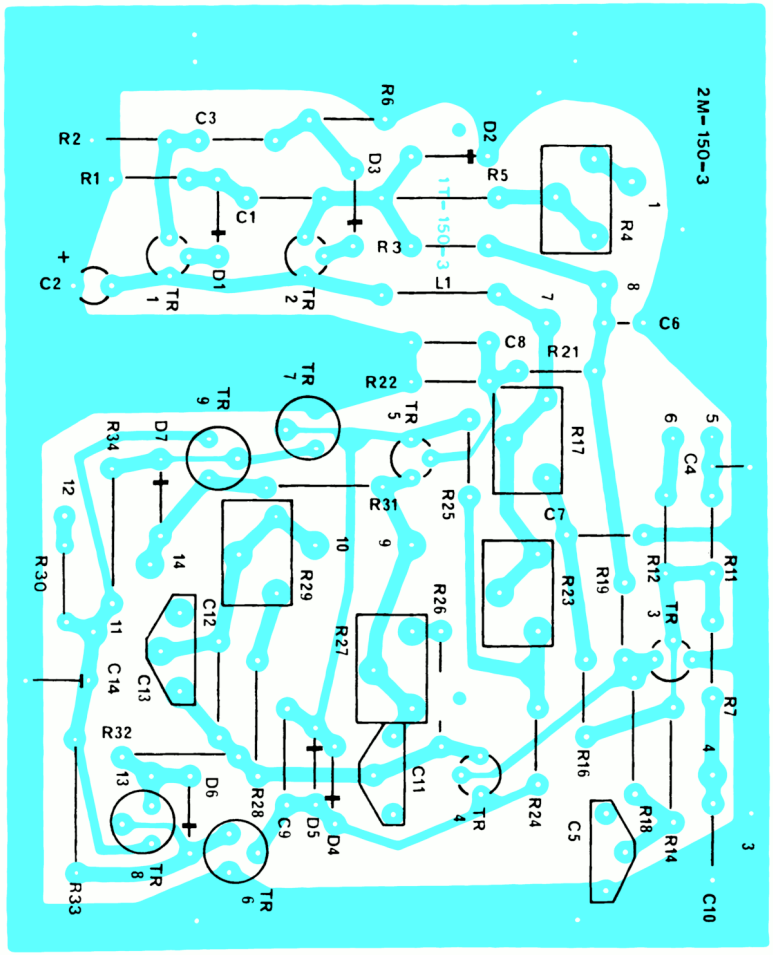

PC 150

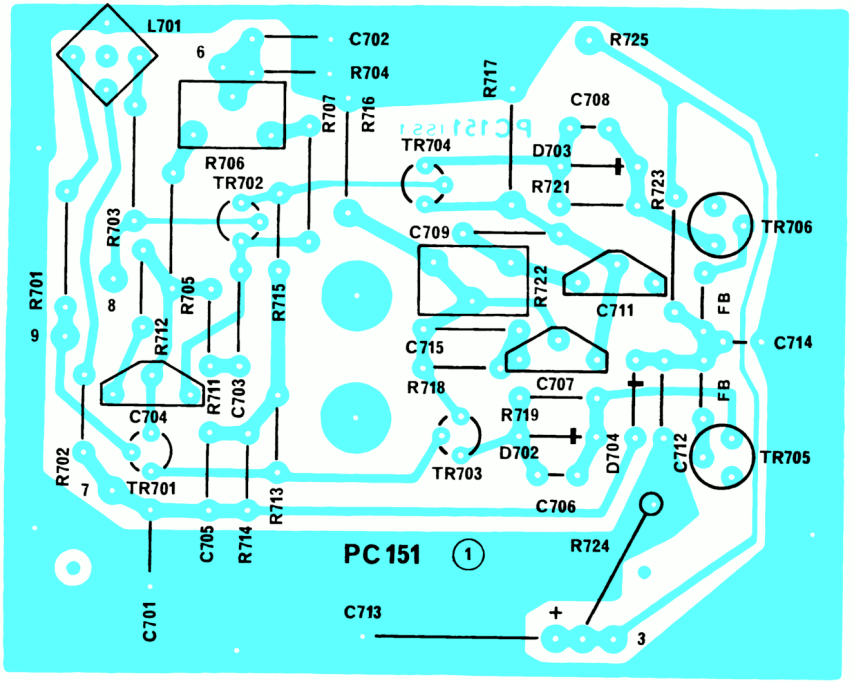

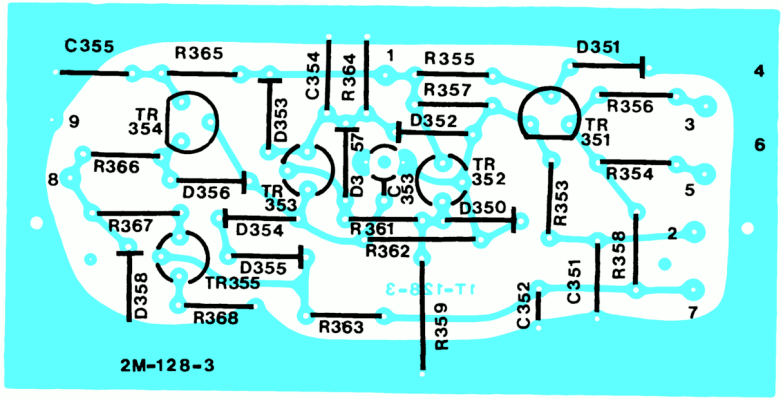

PC 128

COMPONENT REFERENCE FIG 7

RESISTORS	901 910 900 902 903 905 904 907 920 909 908 911 912 913
CAPACITORS	901 902 903 904 900 905 906 907 908 909 912 911
MISC.	S901 S902

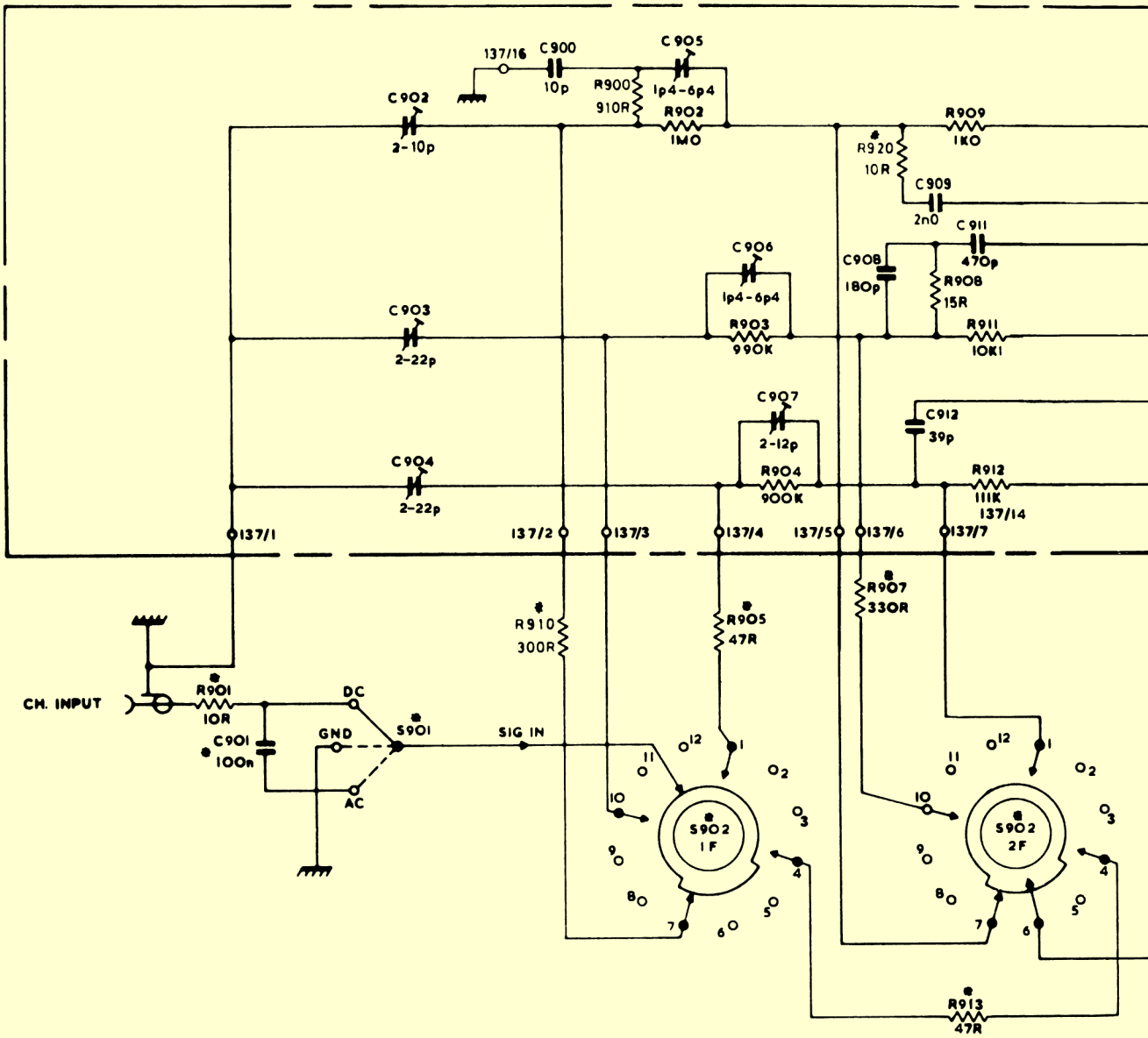

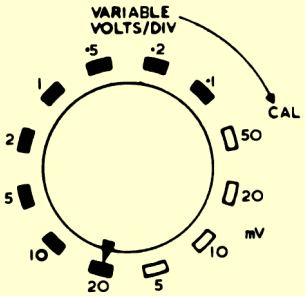

FRONT PANEL MARKING.

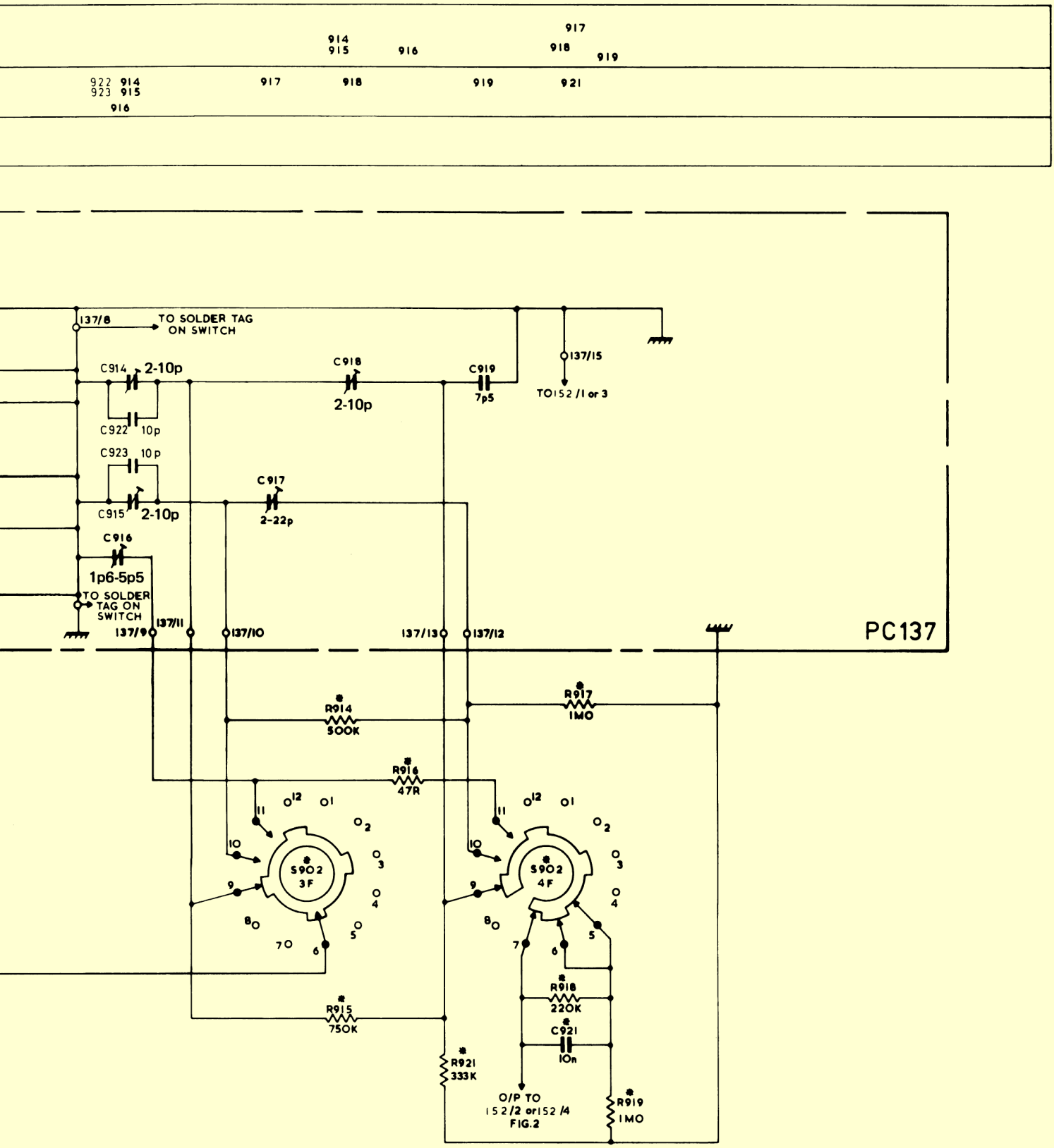

DUAL TRACE AMPLIFIER TYPE V4
VOLTS / DIV SWITCH
FIG. 1

Switch Position	ATTENUATION SELECTED BY WAFER 1	2	3	4	Selected Resistor To Earth 1F	Resistor Between Eyelets and 2F	Selected Resistor Between 3F and 4F	Selected Resistor Between 4F and Earth
20 V	Eyelet No.: 137/2	Eyelet No.: 137/5	Eyelet No.: 137/11	Eyelet No.: 137/13	R902 R909	R906	R915	R921 R919
10 V	137/2	137/5	137/10	137/12	R902 R909	R906	R914	R917 R919
5 V	137/2	137/5	137/9	—	R902 R909	R906	R916	R919
2 V	137/3	137/6	137/11	137/13	R903 R908 R911	R907	R915	R921 R919
1 V	137/3	137/6	137/10	137/12	R903 R908 R911	R907	R914	R917 R919
0·5 V	137/3	137/6	137/9	—	R903 R908 R911	R907	R916	R919
0·2 V	137/4	137/7	137/11	137/13	R905 R904 R912	—	R915	R921 R919
0·1 V	137/4	137/7	137/10	137/12	R905 R904 R912	—	R914	R917 R919
50 mV	137/4	137/7	137/9	—	R905 R904 R912	—	R916	R919
20 mV	—	—	137/11	137/13	—	Resistor Between 1F & 2F R913	R915	R921 R919
10 mV	—	—	137/10	137/12	—	R913	R914	R917 R919
5 mV	—	—	137/9	—	—	R913	R916	R919

TABLE — VOLTS/DIV SWITCH CONNEXIONS

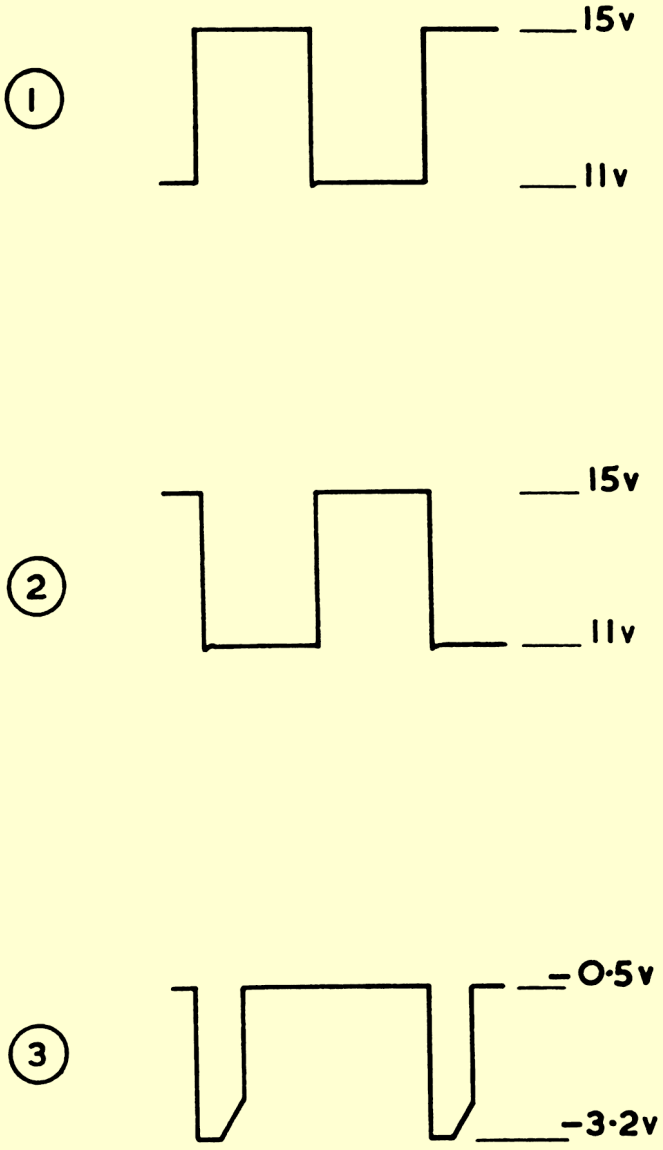

PLATE 6/1

RESISTORS	601 602 603 604 605 606 607 608 609 611 612 613 614 615 616 617 618 619 621 622 623 624 625 626 631 694 695 696 697 698 699 704 705 706 627 628 632 633 634 635 636 637 638 639 641 642 643 644 645 646 647 648 649 651 652 653 654 655 657 658 659 661 662 663 701 702 703
CAPACITORS	601 602 603 604 605 606 607 608 610 620 622 623 619 621
MISC.	D601 D602 D603 S602 S603 TR601A TR601B TR603A TR603B TR605A TR605B TR607A TR607B TH601 TH602 D604 S601 TR609 TR611 TR612 TR613
SK601 SK602	

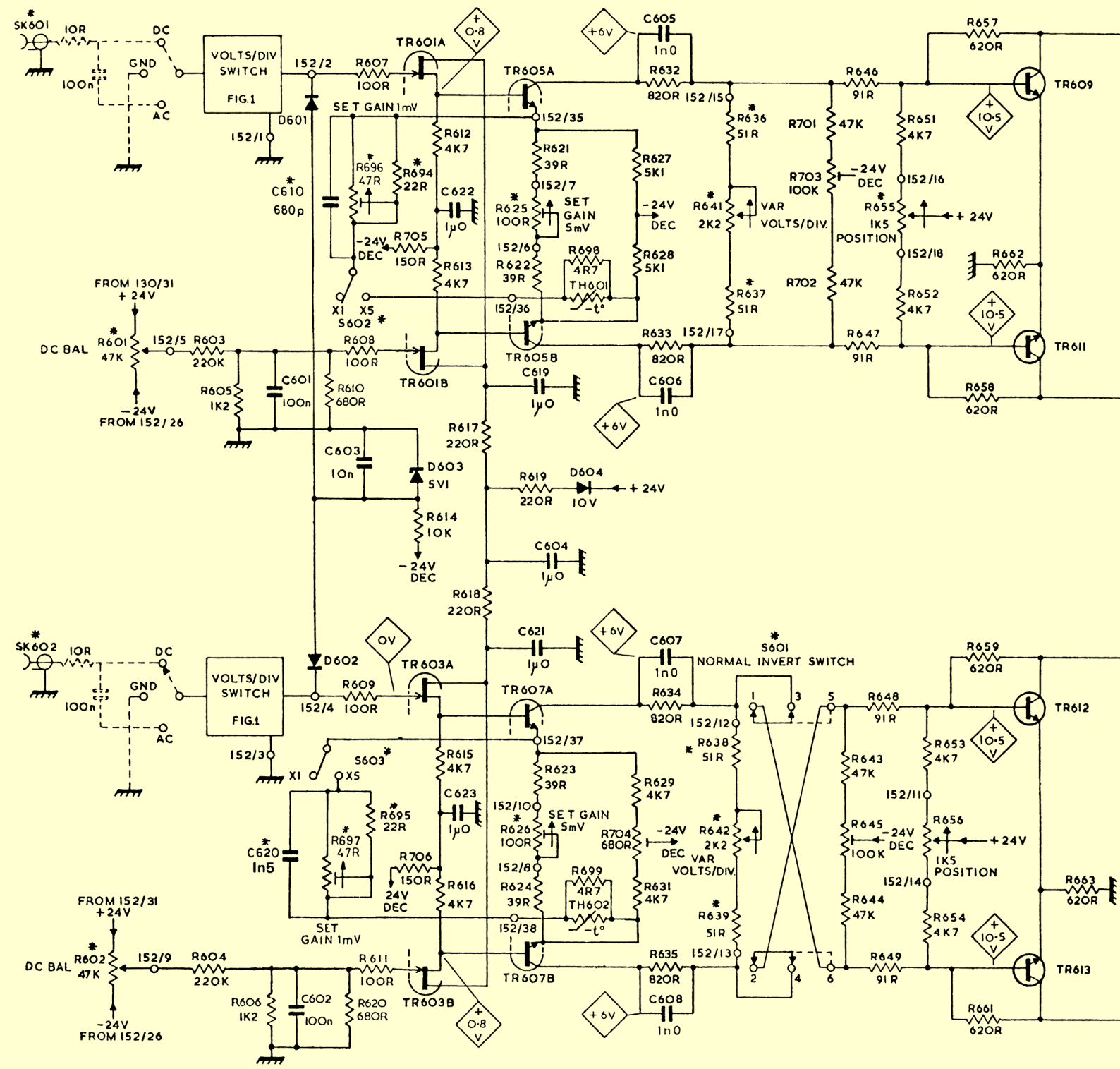

NOTES

1. * DENOTES COMPONENTS NOT MOUNTED ON PC BOARD
2. 152/2 DENOTES PC BOARD/EYELET OR TERMINAL No.

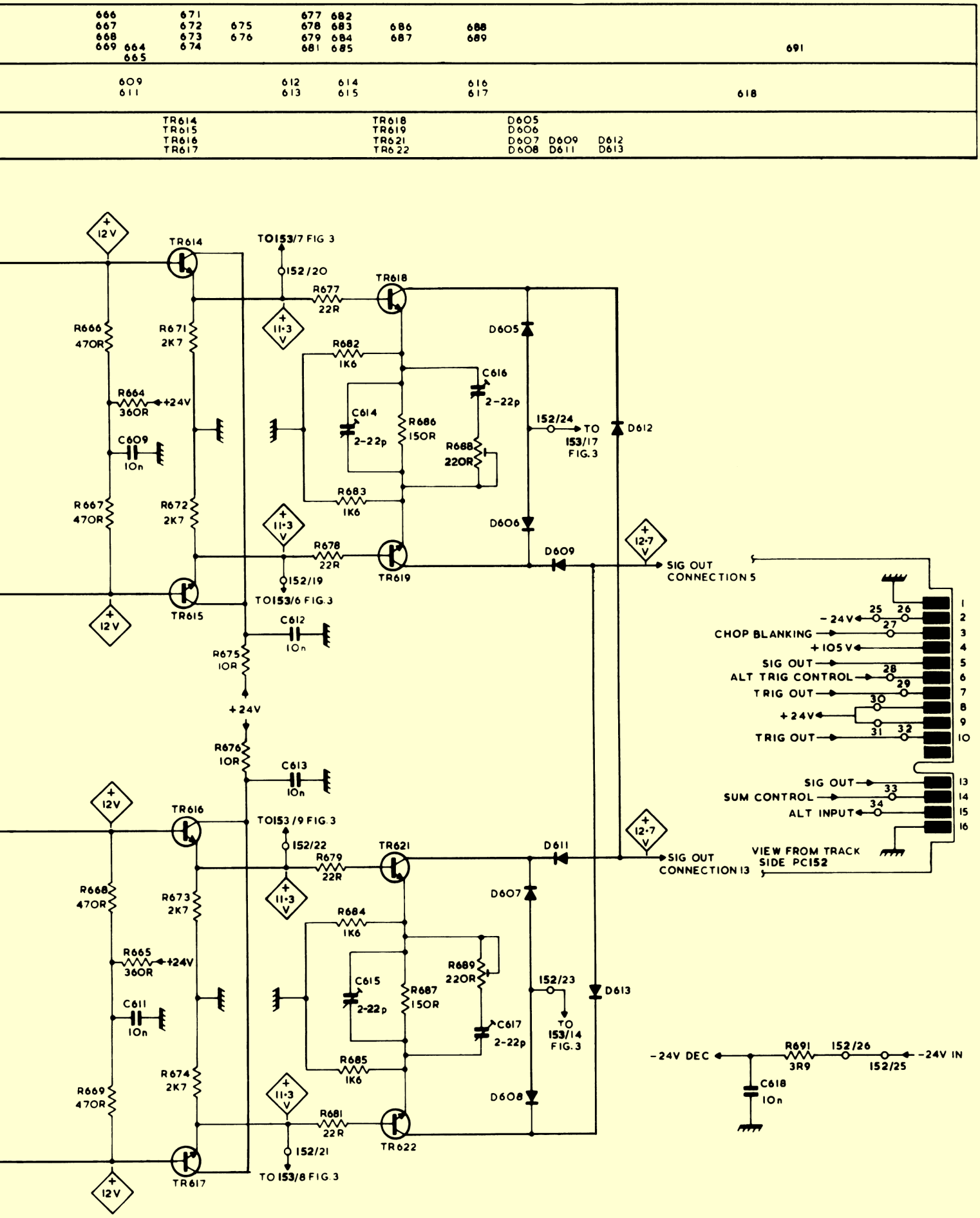

DUAL TRACE AMPLIFIER TYPE V4

PC152 FIG. 2

RESISTORS	751 752 753 754 755 756 757 758 761 762 759 763 764 765 768 766 767 769 771 772 773 774 786 787 788 789 791 792 793 794 795 796 797 798 799
CAPACITORS	750 751 753 754 755 752 756 757 758 762 763
MISC.	D751 TR751 S751a S751b S751c S751c S751d S751b S751e TR752 TR753 D752 D753 TR756 TR757 TR758 TR759 S752a S752b D754 D755 D756 D757 D758 D759 D761 D762

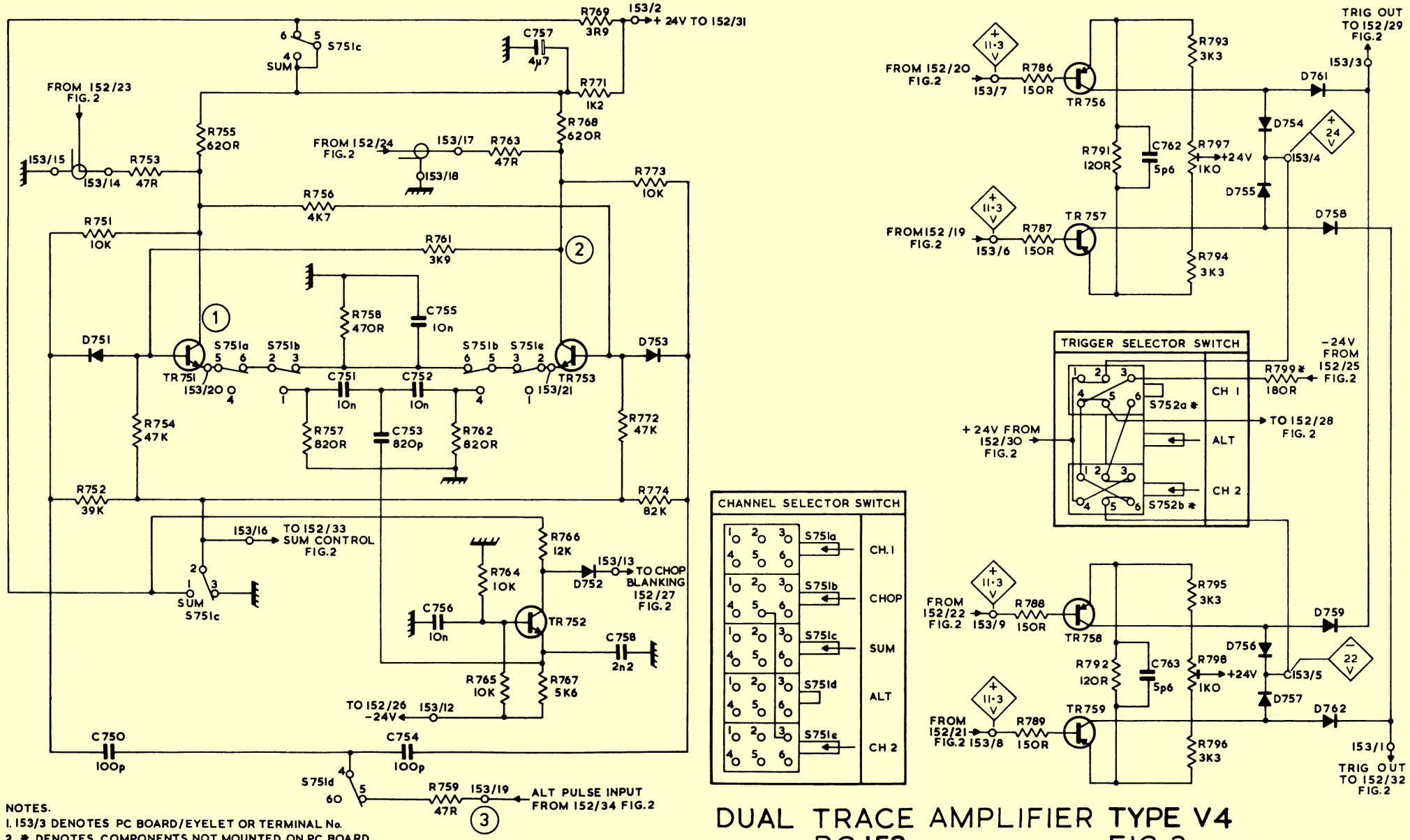

NOTES.
1. 153/3 DENOTES PC BOARD/EYELET OR TERMINAL No.
2. * DENOTES COMPONENTS NOT MOUNTED ON PC BOARD

DUAL TRACE AMPLIFIER TYPE V4
PC 153 FIG. 3

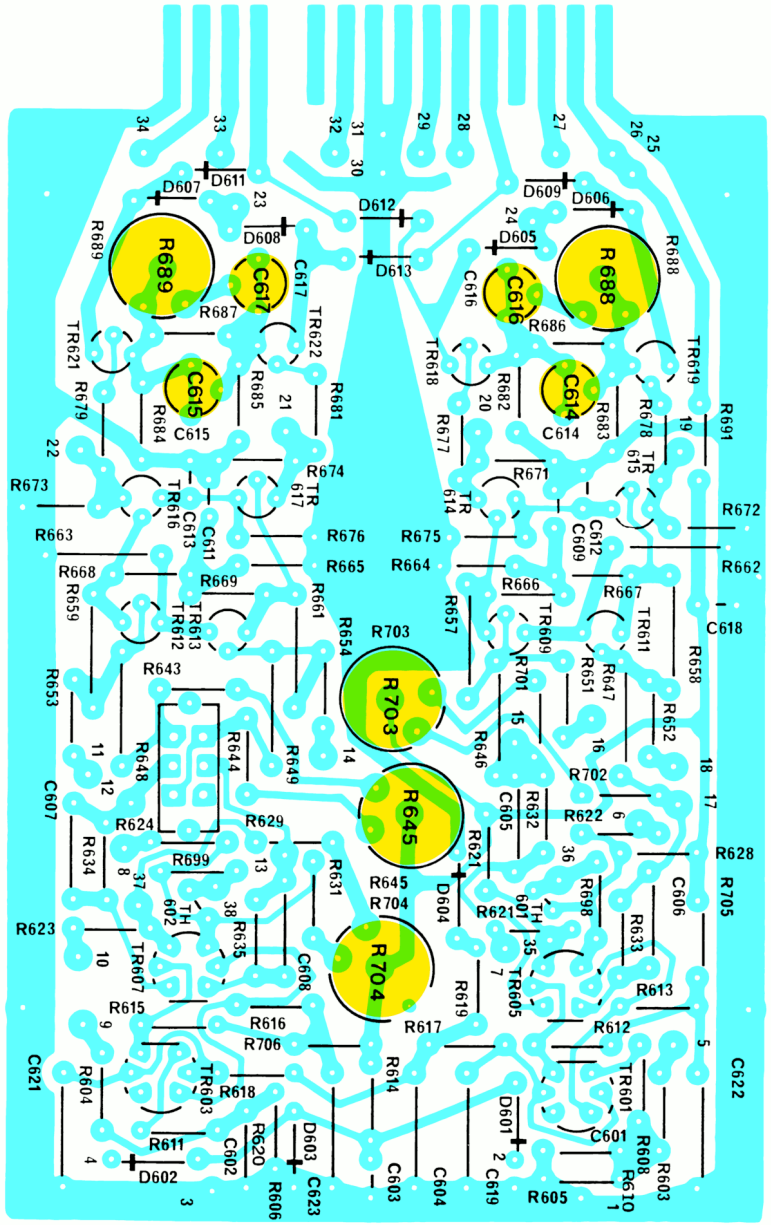

PC 152

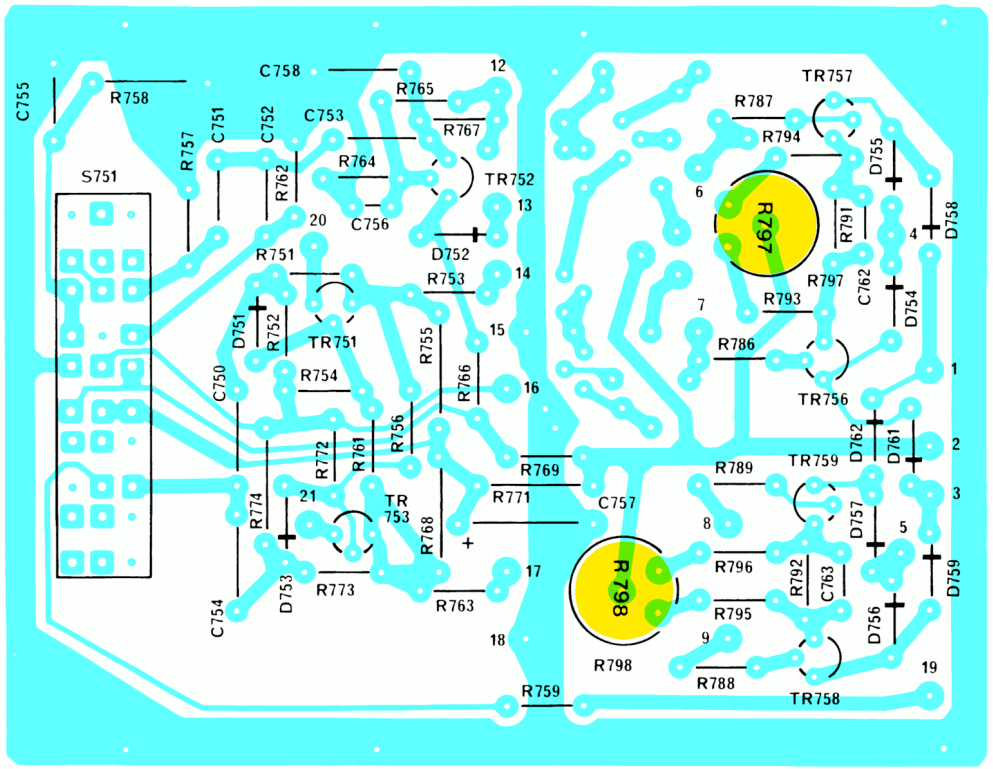

PC 153

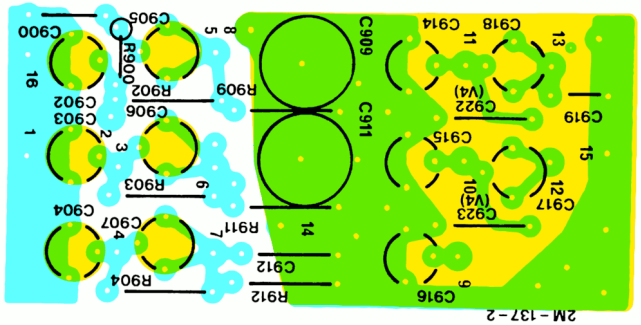

FIGURE 4 COMPONENT REFERENCE

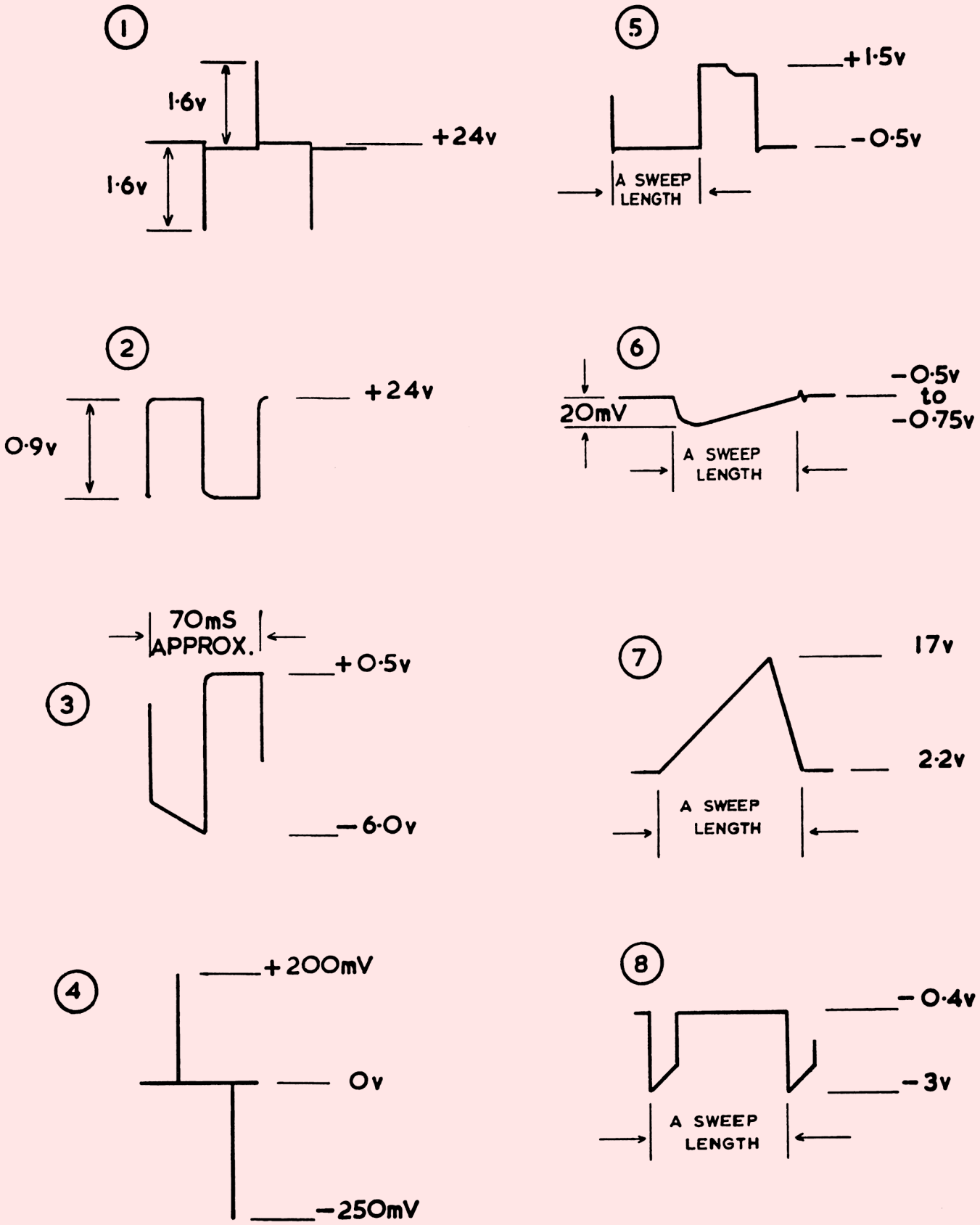
1
1·6v
1·6v
+24v
2
0·9v
+24v
3
70mS
APPROX.
+0·5v
−6·0v
4
+200mV
0v
−250mV
5
+1·5v
−0·5v
A SWEEP
LENGTH
6
20mV
−0·5v
to
−0·75v
A SWEEP
LENGTH
7
17v
2·2v
A SWEEP
LENGTH
8
−0·4v
−3v
A SWEEP
LENGTH

PLATE 6/1

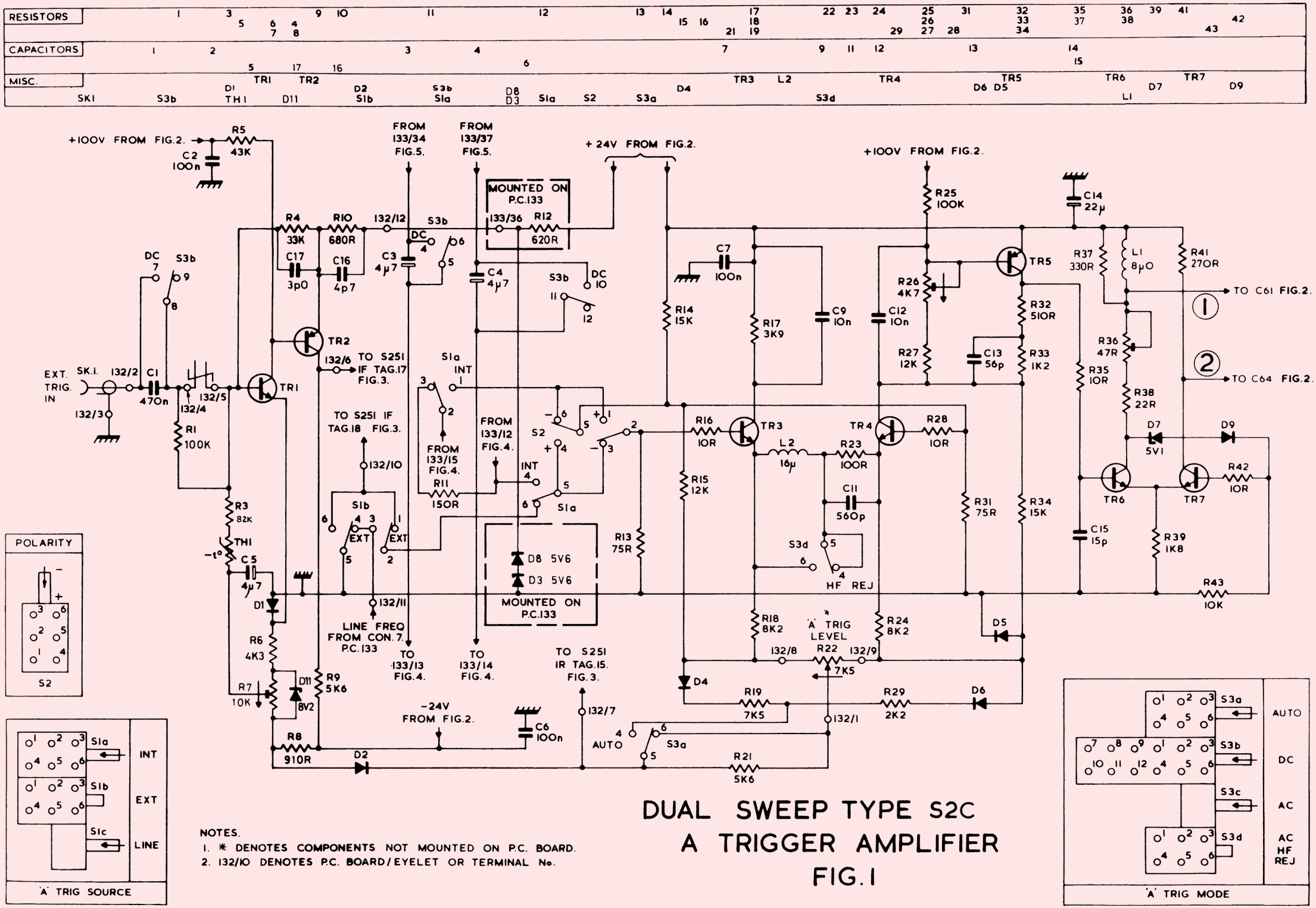

NOTES.
1. ✱ DENOTES COMPONENTS NOT MOUNTED ON P.C. BOARD.
2. 132/10 DENOTES P.C. BOARD/EYELET OR TERMINAL No.

DUAL SWEEP TYPE S2C A TRIGGER AMPLIFIER

FIG.1

RESISTORS	62 63 64 65 66 67 68 69 71 72 73 74 75 76 77 80 81 82 83 84 85 86 88 87 90
CAPACITORS	61 62 63 64 65 66 68
MISC.	D61 D62 TR61 TR62 S3a D63 L61 D64 TR63 TR64 D65 SK61 TR65

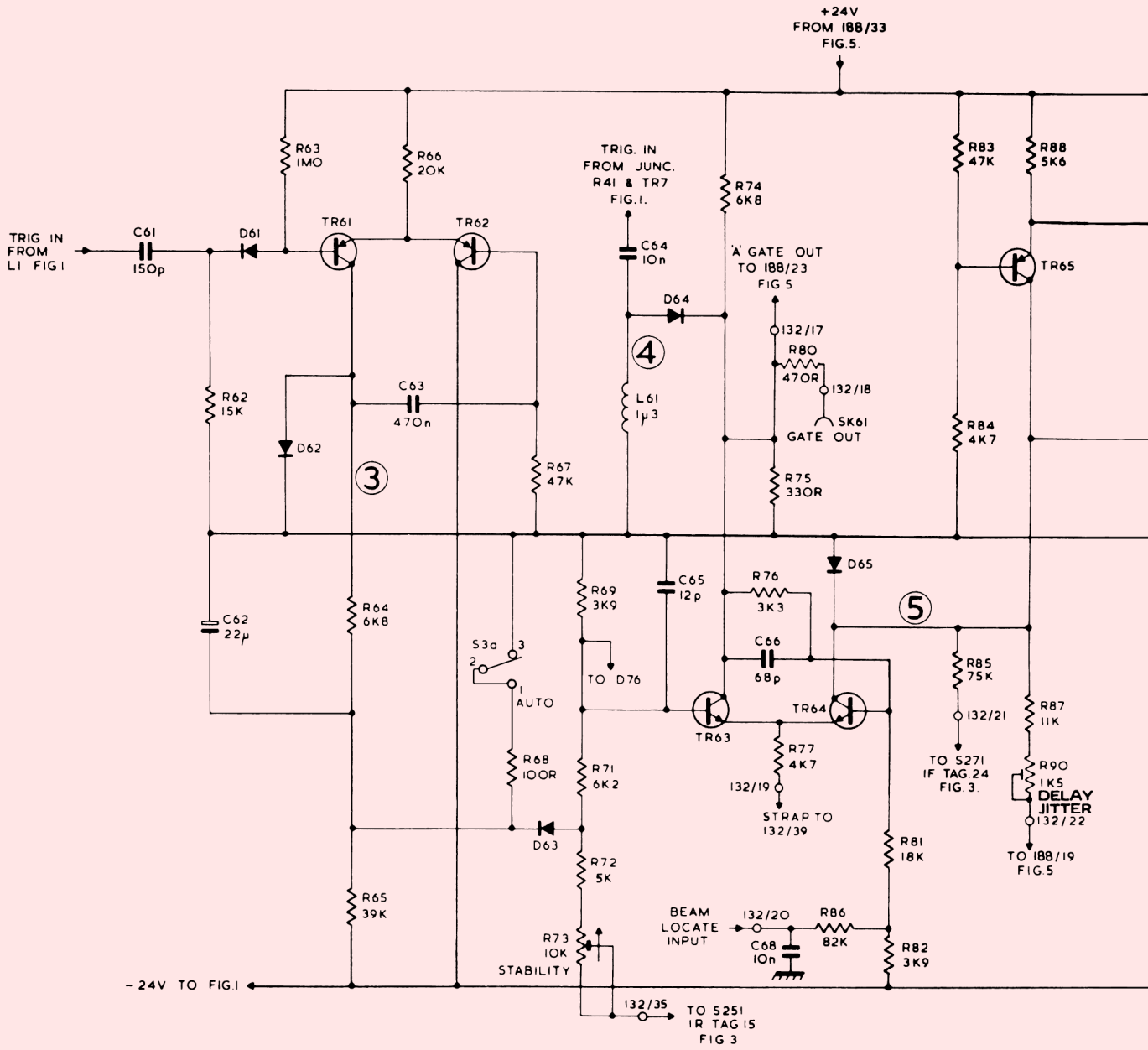

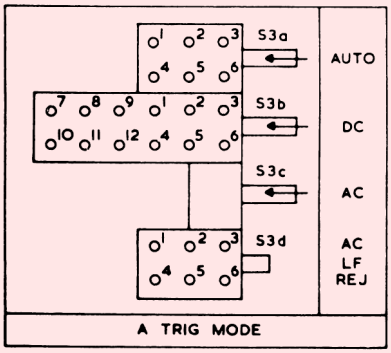

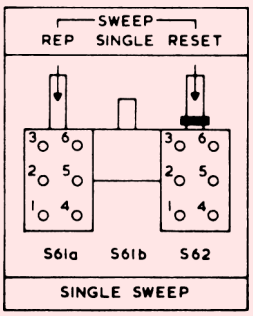

NOTES.
1. ✱ DENOTES COMPONENTS
2. 132/20 DENOTES P.C. BOARD

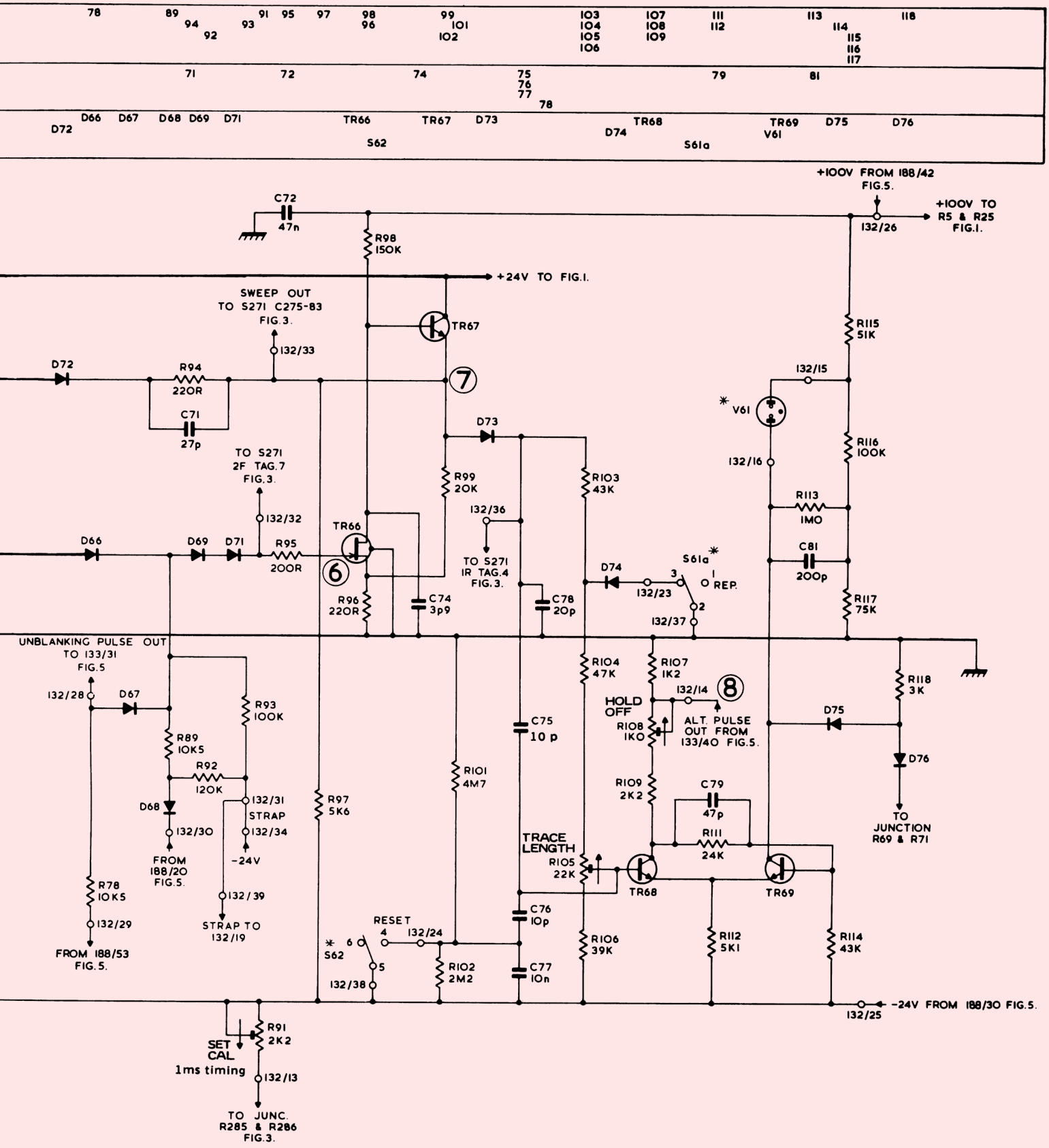

NOT MOUNTED ON P.C. BOARD.
EYELET OR TERMINAL No.

DUAL SWEEP TYPE S2C
A SWEEP GENERATOR P.C.132
FIG. 2.

2R
10/78

POSITION	Timing Capacitors selected by wafer	Timing resistors selected by wafer
1 S	C254, C251, C255, C252	R251 - R257
·5 S	C254, C251, C255, C252	R252 - R257
·2 S	C254, C251, C255, C252, C256	R253 - R257
·1 S	C254, C251, C255, C252, C256, C253	R254 - R257
50 mS	C254, C251, C255, C252, C256, C253	R255 - R256
20 mS	C254, C251, C255, C252, C256, C253	R256 - R257
10 mS	C254, C251, C255, C252, C256, C253	R257
5 mS	C257, C251, C255, C252, C256, C253	R252 - R257
2 mS	C257, C251, C255, C252, C256, C253	R253 - R257
1 mS	C257, C251, C255, C252, C256, C253	R254 - R257
·5 mS	C257, C251, C255, C252, C256, C253	R255 - R257
·2 mS	C257, C251, C255, C252, C256, C253	R256 - R257
·1 mS	C257, C251, C255, C252, C256, C253	R257
50 μS	C251, C255, C252, C256, C253	R255 - R257
20 μS	C251, C255, C252, C256, C253	R256 - R257
10 μS	C255, C252, C256, C253	R257
5 μS	C255, C252, C256, C253	R255 - R257
2 μS	C255, C252, C256, C253	R256 - R257
1 μS	C256, C253	R257
·5 μS	C256, C253	R257 - R258
·2 μS	C253	R257 - R258
·1 μS		R257 - R258

'B' TIME/DIV. SWITCH CONNEXIONS

RESISTORS	259 261	251	252	253	254 258	255	256	257
CAPACITORS							251 252 253	254 255 256 257
MISC.	S251							FB251

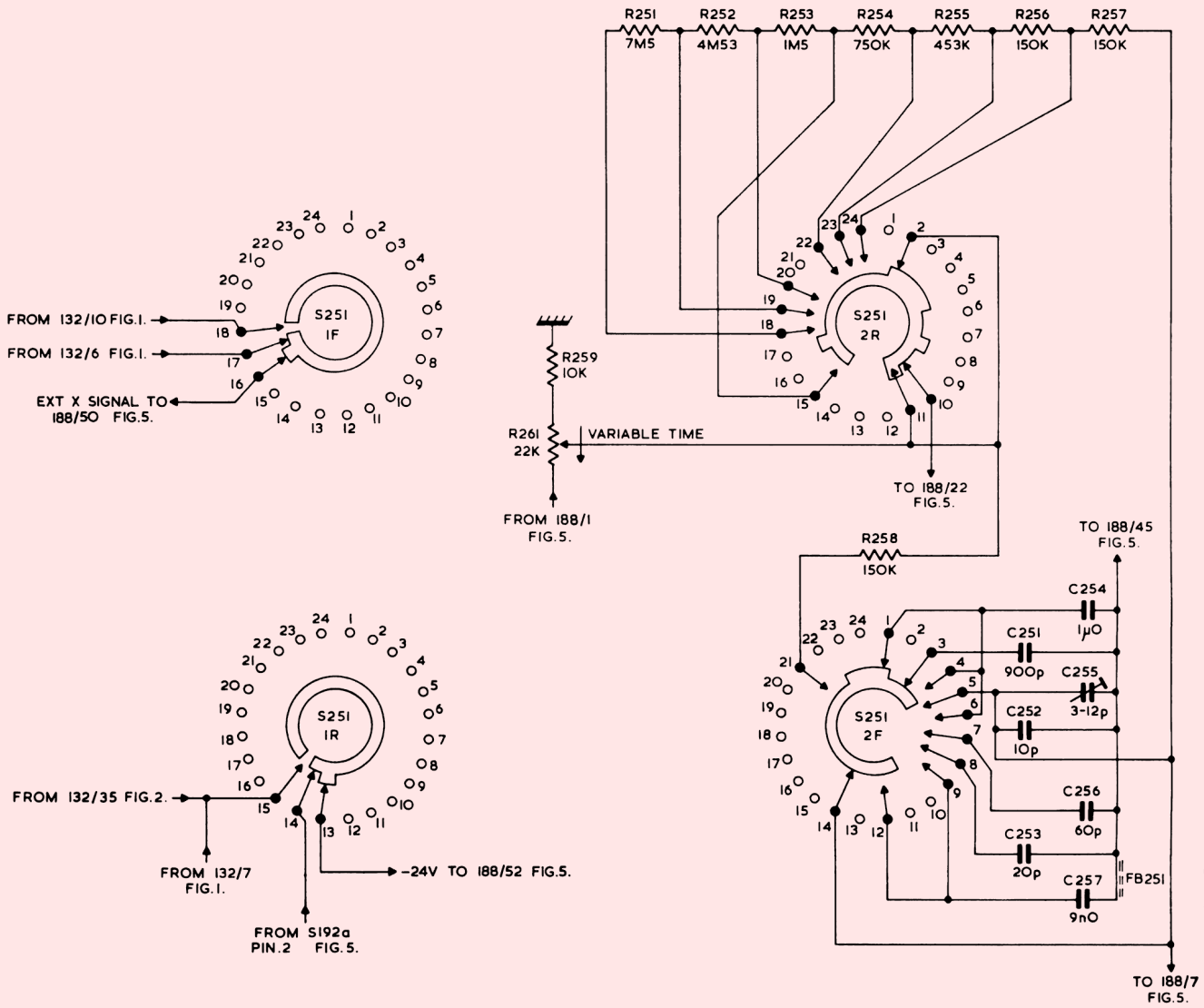

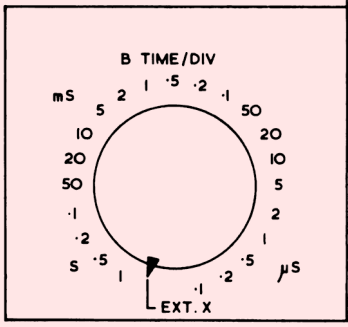

FRONT PANEL

B TIME/DIV. SWITCH S2C
FIG. 3.

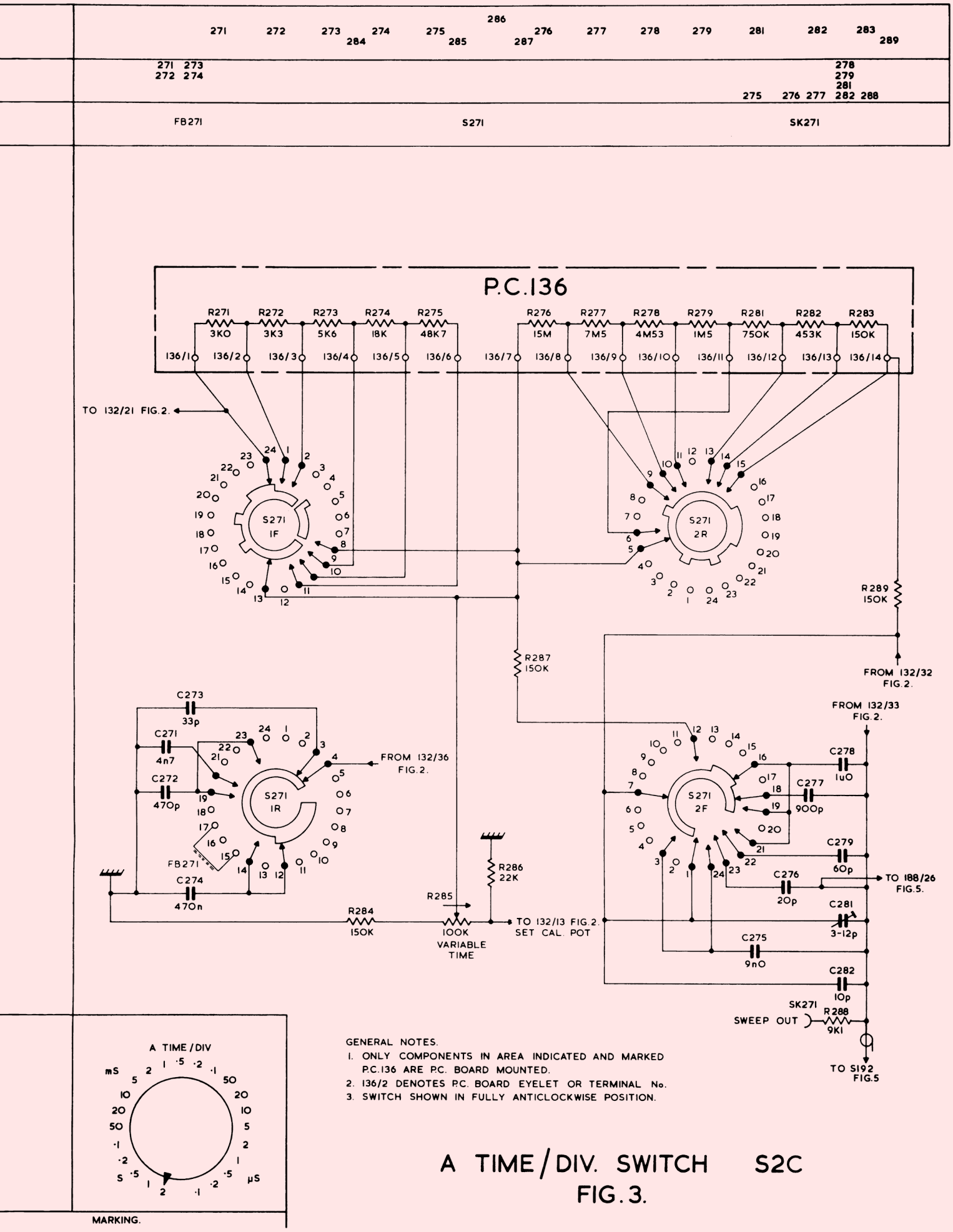

A TIME/DIV. SWITCH S2C
FIG. 3.

POSITION	R285 Loading Resistors Selected by Wafer 1F	Timing Resistors Selected by Wafer 2R	Hold Off Capacitor Selected by Wafer 1R	Timing Capacitors Selected by Wafer 2F
2 s	–	R276, R277, R278, R279, R281, R282, R283	C273, C274	C277, C278
1 s	–	R277, R278, R279 R281, R282, R283	C273, C274	C277, C278
0·5 s	–	R278, R279, R281, R282, R283	C273, C274	C277, C278
0·2 s	R271	R279, R281, R282, R283	C273, C274	C277, C278, C279
0·1 s	R271, R272	R281, R282, R283	C273, C274	C276, C277, C278, C279
50 ms	R271, R272, R273	R282, R283	C273, C274	C276, C277, C278, C279
20 ms	R271, R272, R273, R274	R283	C273, C274	C276, C277, C278, C279
10 ms	R271, R272, R273, R274, R275	–	C272, C273, C274	C276, C277, C278 C279
5 ms	–	R278, R279, R281, R282, R283	C271, C272, C273	C275, C276, C277, C279
2 ms	R271	R279, R281, R282, R283	C271, C272, C273	C275, C276, C277, C279
1 ms	R271, R272	R281, R282, R283	C271, C272, C273	C275, C276, C277, C279
·5 ms	R271, R272, R273	R282, R283	C271, C272, C273	C275, C276, C277, C279
·2 ms	R271, R272, R273, R274	R283	C271, C272, C273	C275, C276, C277, C279
·1 ms	R271, R272, R273, R274, R275	–	C271, C272, C273	C275, C276, C277, C279
50 μs	R271, R272, R273	R282, R283	C272, C273	C276, C277, C279
20 μs	R271, R272, R273, R274	R283	C272, C273	C276, C277, C279
10 μs	R271, R272, R273, R274, R275	–	C272, C273	C276, C277, C279
5 μs	R271, R272, R273	R282, R283	C273	C276, C279
2 μs	R271, R272, R273, R274	R283	C273	C276, C279
1 μs	R271, R272, R273, R274, R275	–	C273	C276, C279
·5 μs	–	–	C273	C276, C279
·2 μs	–	–	–	C276
·1 μs	–	–	–	–

TABLE 'A' TIME/DIV SWITCH CONNEXIONS

RESISTORS	151 152 153 154 155 156 157 158 159 161 162 163 164 165 166 167 168 169 171 172 173 174 175 176 177
CAPACITORS	151 152 153 154 150 155 156 157 158 159
MISC.	SK151 S152 S151 S153 TR151 TR152 TR153 TR154 S153 TR155

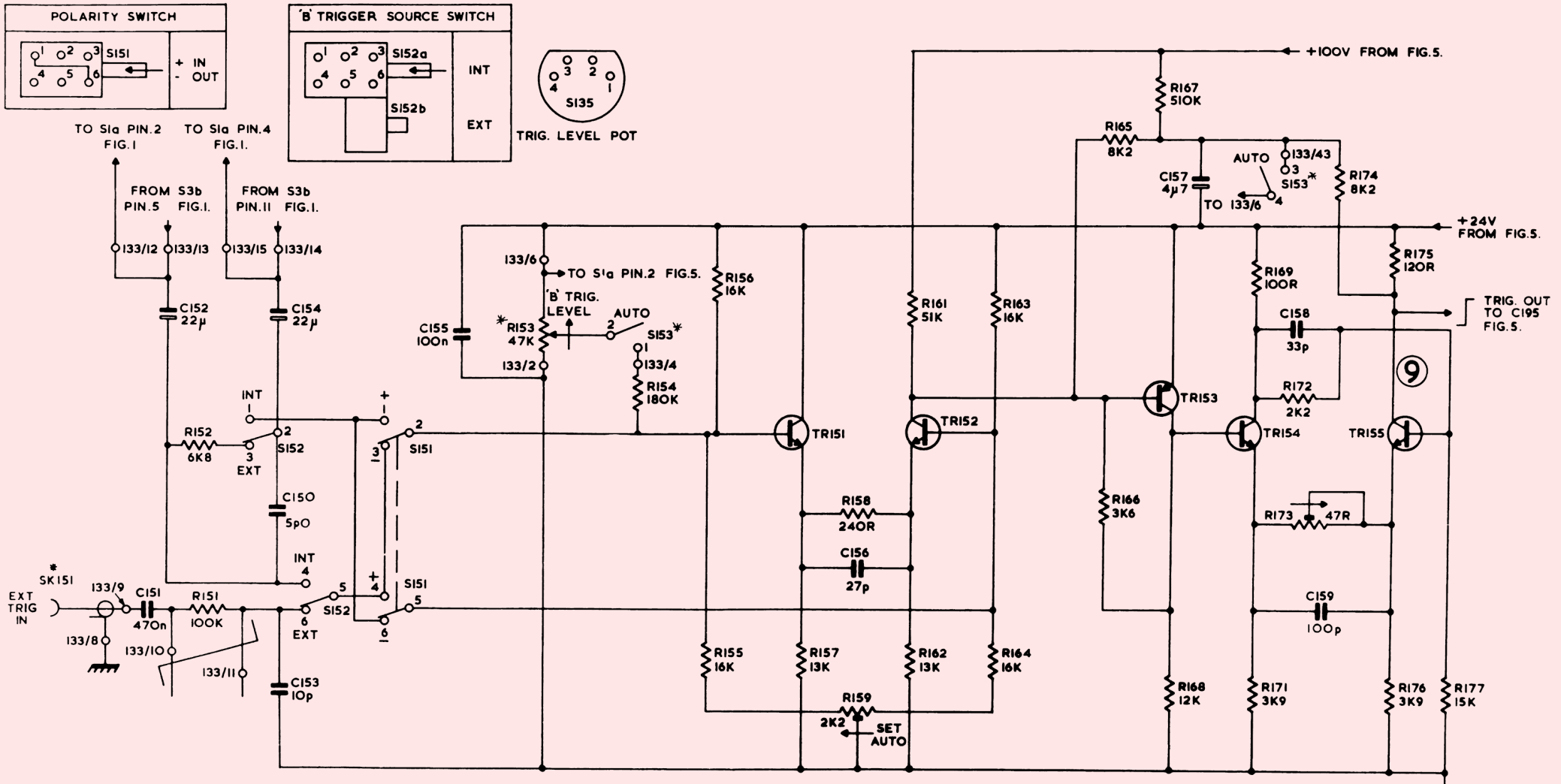

NOTES
1. * DENOTES COMPONENTS NOT MOUNTED ON P.C. BOARD.
2. 133/10 DENOTES P.C. BOARD/EYELET OR TERMINAL No.

DUAL TRACE TYPE S2A & S2C
'B' TRIGGER AMPLIFIER P.C.133 FIG. 4.

RESISTORS	191 192 193 194 195 196 200 197 198 199 201 202 203 204 205 206 207 208 211 212 209 213
CAPACITORS	192 197 194 195 196 198
MISC.	TR191 TR192 S191 D193 TR193 D194 TR194

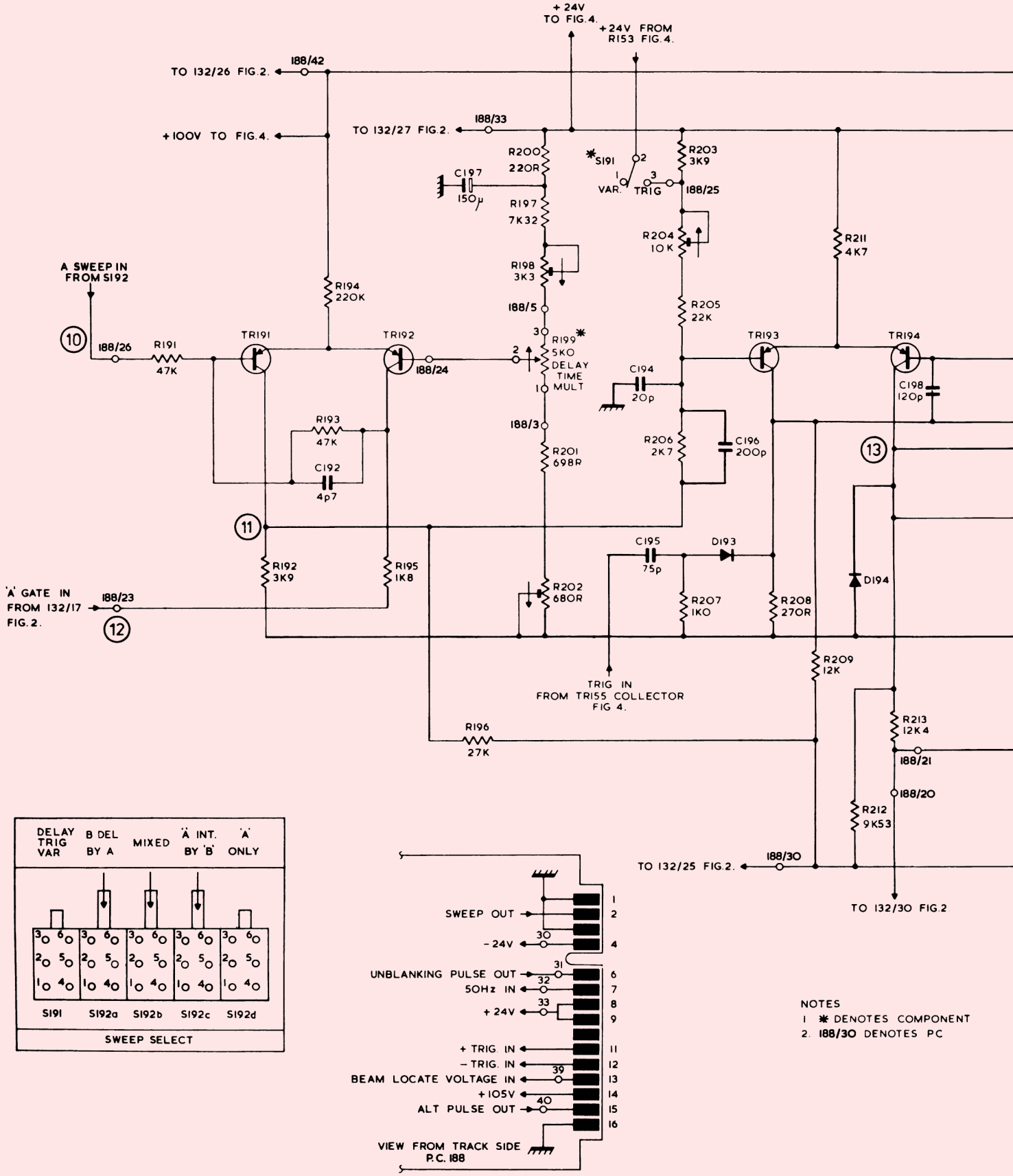

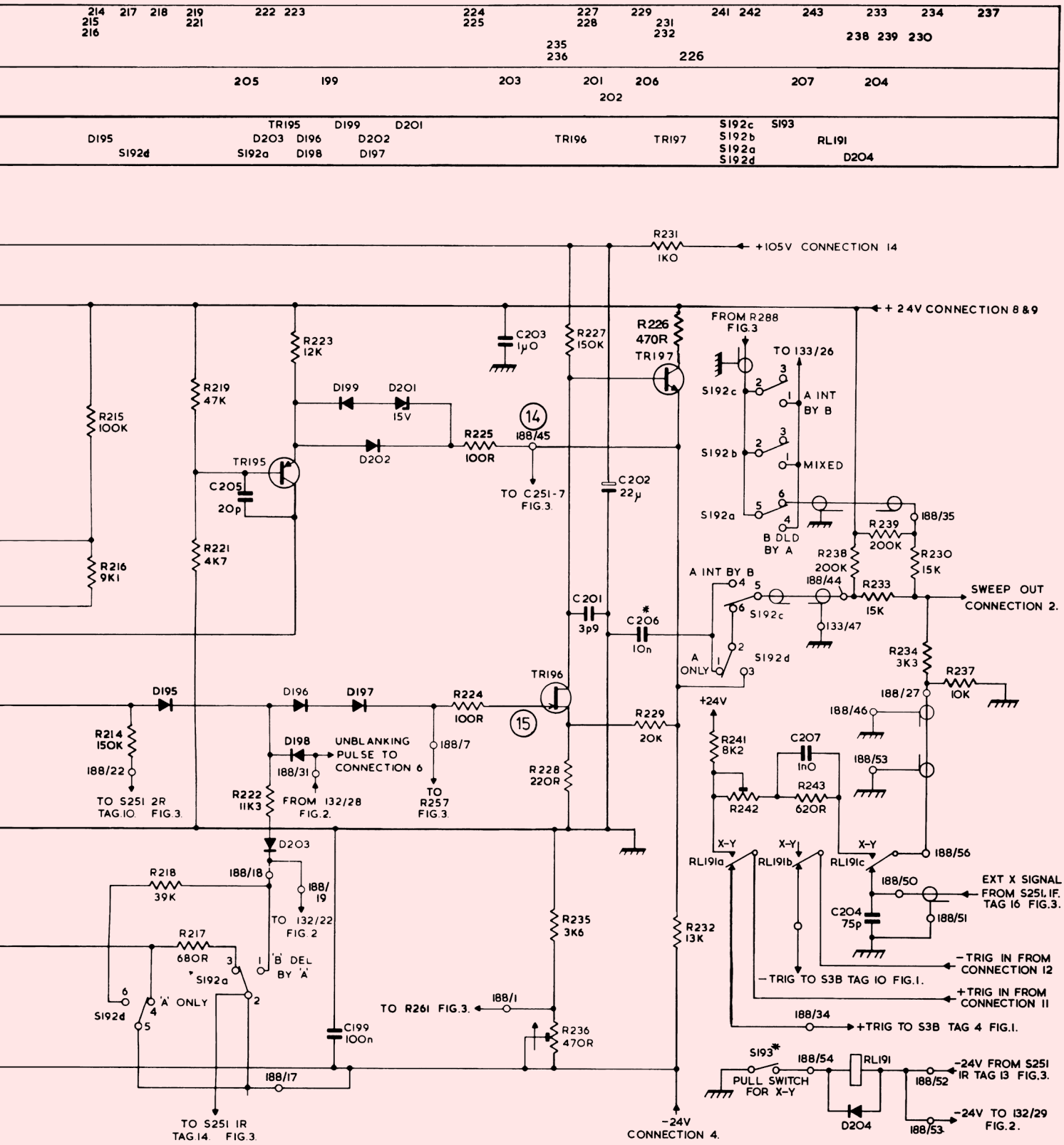

NOT MOUNTED ON P.C. BOARD.
BOARD/EYELET OR TERMINAL No.

DUAL SWEEP TYPE S2C
'B' SWEEP GENERATOR P.C.188
FIG. 5.

10/78

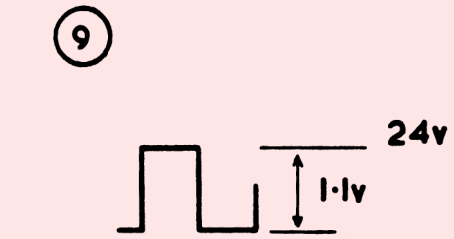
9
24v
1·1v

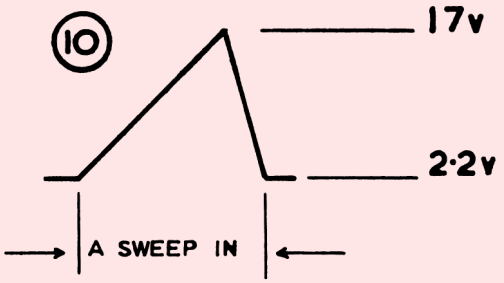
10
17v
2·2v
A SWEEP IN

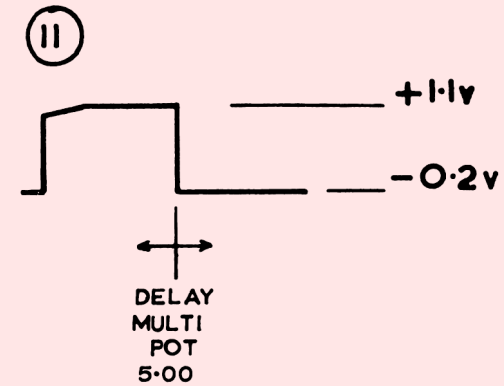
11
+1·1v
−0·2v
DELAY
MULTI
POT
5·00

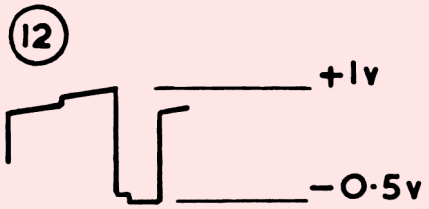
12
+1v
−0·5v

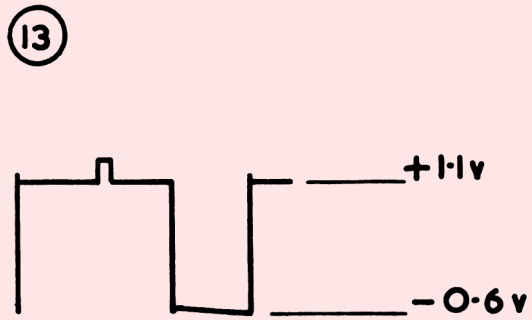
13
+1·1v
−0·6v

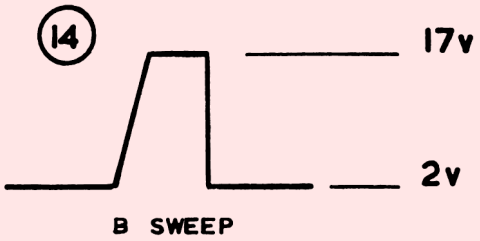
14
17v
2v
B SWEEP

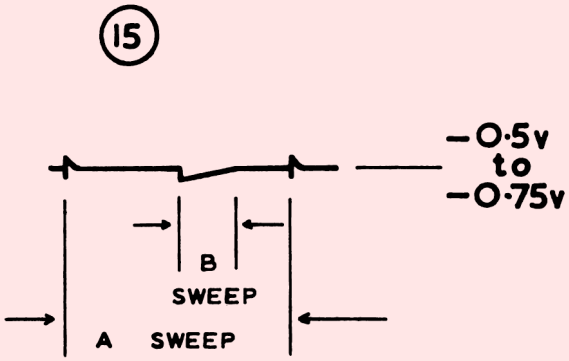
15
−0·5v
to
−0·75v
B
SWEEP
A SWEEP

PLATE 6/2

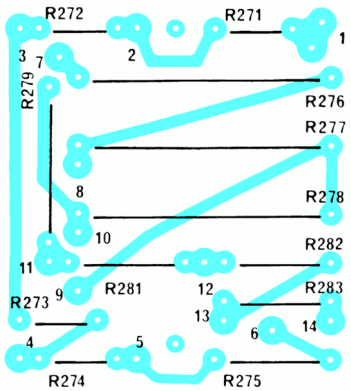

PC 136

PC 132

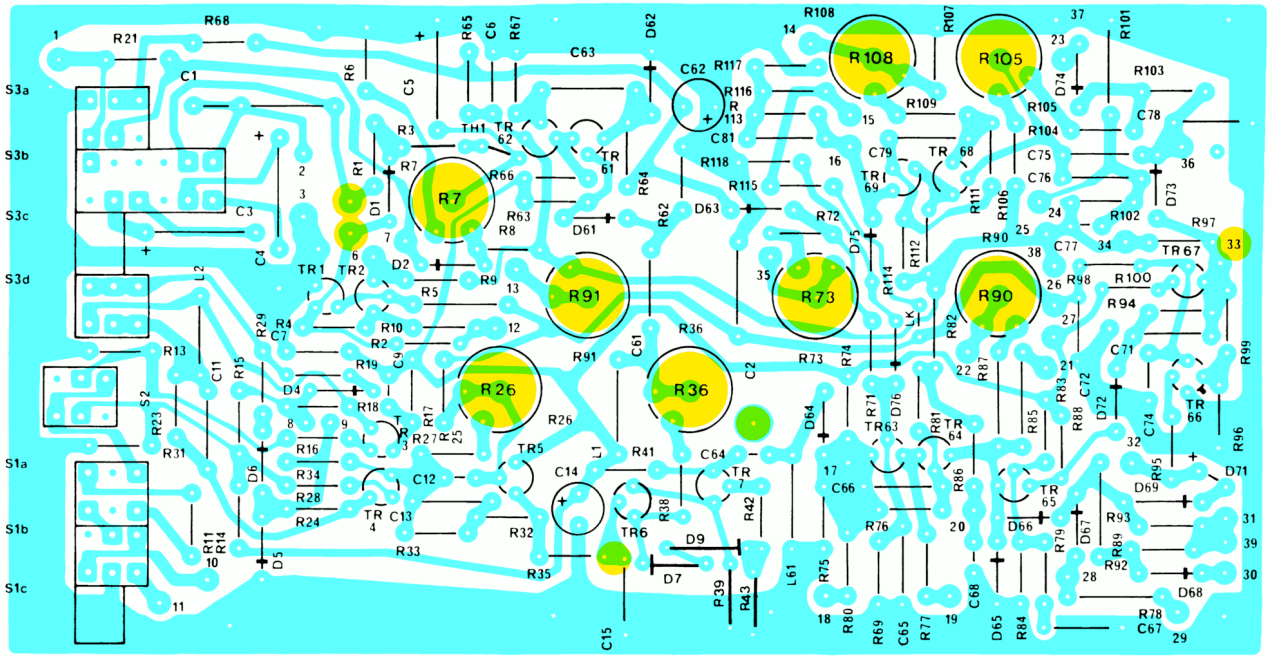

PC 133

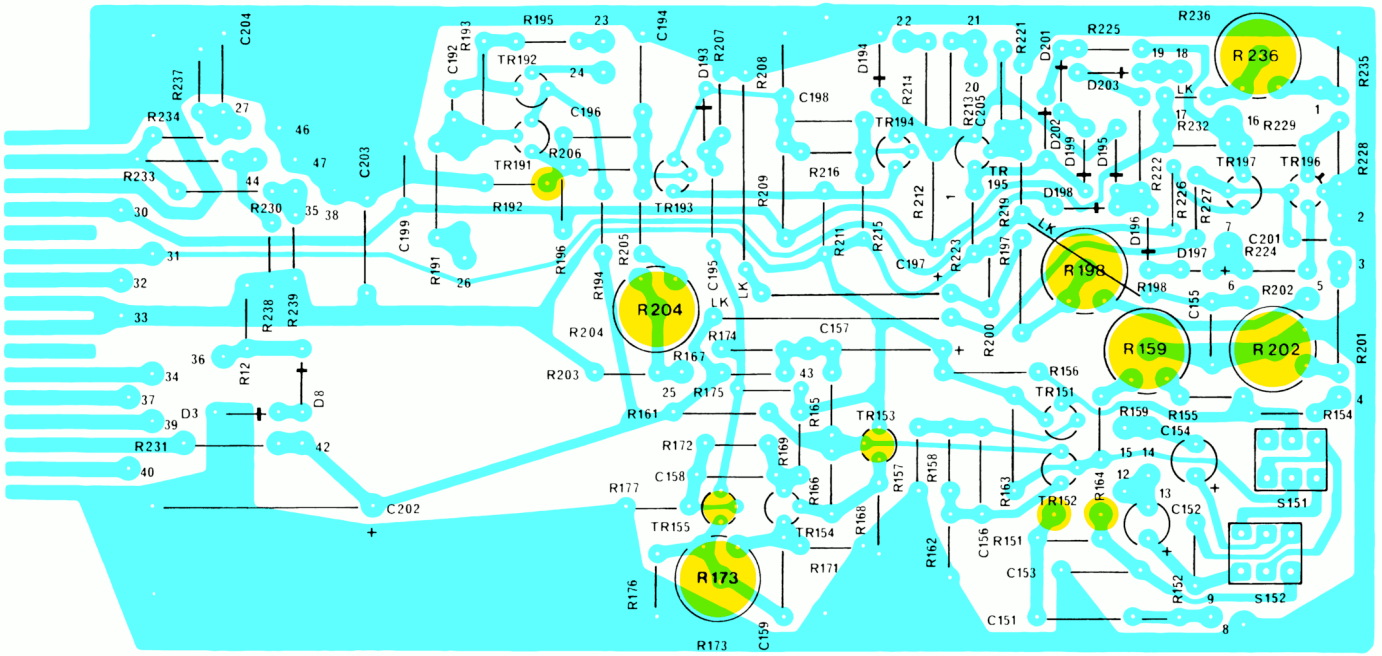

Figure 6
COMPONENT
REFERENCE

SECTION 7

D75 PLUG-IN VARIATIONS

The factory manufactured versions are supplied as a basic D75 Mainframe with the appropriate plug-in modules as listed:—

D75 comprises:

(a)	50MHz Dual-Channel Amplifier	—	Type V4
(b)	Dual Sweep Unit	—	Type S2A

D751 comprises:

(a)	Differential Amplifier Unit	—	Type V3
(b)	Single Sweep Unit	—	Type S1A

D752 comprises:

(a)	Differential Amplifier Unit	—	Type V3
(b)	Dual Sweep Unit	—	Type S2A

D755 comprises:

(a)	50MHz Dual-Channel Amplifier	—	Type V4
(b)	Dual Sweep Unit with X—Y facility	—	Type S2C

Standard Options

If the basic D75 Mainframe to which this manual applies has been supplied with one or more of the Standard Options listed below the appropriate technical data supplied must be used in conjunction with the standard manual information.

Option 4	P7 C.R.T. (Part No. 154-0731-03) and amber filter (Part No. 378-0812-02) fitted in place of P31 C.R.T. and blue filter.
Option 6	Supplied as 115V and fitted with U.S.A. power cord (Part No. 161-0085-00)

TELEQUIPMENT

MANUAL AMENDMENT LIST

INSTRUMENT	D755 Opt.66,68	MANUAL PART NUMBER	070-1487-10	ISSUE	4	AMENDMENT LIST	1
S.O. NUMBER		BATCH NUMBER		DATE	12th December '80	PAGE 1	OF 9

DESCRIPTION OF AMENDMENT	STARTING SERIAL NUMBER

(1) Page 2/2

Para 2.7 Operation

4. Should read Connect the CAL 30mV to V/A INPUT CH1 via coaxial lead.
6. Should read On V/A Set Channel Select to CH1.
7. Should read Set VOLTS/DIV, CH1, to 5mV.
8. Should read Rotate LEVEL anti-clockwise to lock display.
9. Should read Check amplitude of 6 divisions.

(2) Page 4/1

Para 4.2.1

5. 2nd Line Should read each to the lower front casting also on the top rear of the unit support bar. When unscrewed, the units may be withdrawn.

Para 4.3.1

Line 13	Should read	Fixture extension, flexible 067-0688-01
Line 19	Should read	BNC 3-way, Male/Female/Male (T piece)
Line 20	Should read	BNC to 2mm
Line 29	Should read	Variable ac Power Supply (0-260V ac)

Para 4.3.2

1.14	Should read	Push both INT. Knobs

(3) Page 5/2

C2 - CHANGE to read Tol -10+100
C4 - CHANGE to read Tol -10+80
C6 - CHANGE to read Tol -20+80
C9 - CHANGE to read 281-0843-00 Rating 50
C10 - CHANGE to read 285-0854-01 Tol 2.5 500
C12 - CHANGE to read 285-0850-01 Tol 2.5 500
C14 - CHANGE to read 290-0664-00 4.7µ
C303 - CHANGE to read Tol -20+50
C306 - CHANGE to read Tol -20+80
C309 - CHANGE to read Tol -20+80
C311 - CHANGE to read Tol -20+80

(3) Page 5/2 Continued

C312 - CHANGE to read Tol -20+80
C352 - CHANGE to read Tol -20+80
C407 - CHANGE to read Tol -20+80
C410 - CHANGE to read 285-0854-01 Tol 2.5 500
C412 - CHANGE to read 285-0870-01 Tol 2.5 500
C414 - CHANGE to read Tol -10+100
C415 - CHANGE to read Tol -10+100
C601 - CHANGE to read Tol -20+80
C605 - CHANGE to read 281-0833-00
C607 - CHANGE to read 281-0848-00 Rating 50V
C609 - CHANGE to read Tol -20+80
C611 - CHANGE to read Tol -20+80
C715 - CHANGE to read Tol 0p5

(4) Page 5/3

All Diodes Pt. No. 152-0062-01 Should read Value 75V Rating 75mA
D302 - CHANGE to read Value 150
D358 - CHANGE to read 152-0062-01 75V 1N914/1N4148 75mA
D414 - CHANGE to read Tol 5

(5) Page 5/4

DL601 - CHANGE 4ons/ft to read 40ns/ft
PL401 - ADD 134-0135-00 Power Plug

(6) Page 5/5

R301 - CHANGE to read 311-1909-00 22k
R318 - CHANGE Pt. No. to read 307-0630-00
R323 - CHANGE to read 307-0533-00 4M7 CM
R330 - CHANGE to read CF Rating 125m
R410 - CHANGE to read Value 470Ω
All resistors Prefix 317-XXXX-XX Should read Type CF

(7) Page 5/6

SK1/SK2 - ADD 131-1268-00 Socket CAL (30 & 300mV)
SK351 - ADD 131-0650-01 Socket (Z MOD)
SK601 - ADD 131-2257-00 Socket 16 way
SK602 - ADD 131-2257-00 Socket 16 way
SK603 - ADD 131-2258-00 Socket 8 way
- ADD 136-0304-02 CRT Base (V301)
T401 - CHANGE Pt. No. to read 120-0813-02
All resistors Prefix 317-XXXX-XX Should read Type CF

(8) Page 5/7

TR603 - CHANGE to read 2N2369 DELETE BSX20
TR604 - CHANGE to read 2N2369 DELETE BSX20
V301 - CHANGE to read 154-0731-02 CRT Tektronix T4651

(9) Page 5/8 Assemblies

Bright-up - CHANGE Pt. No. to read 670-2182-03
Power Board - CHANGE Pt. No. to read 670-2394-01
ADD - Power Cord Set 161-0136-00 (334-2294-01 Label) SK401

(10) Page 5/9 Mechanical List

Item 7 - CHANGE Pt. No. to read 214-3149-00
Item 10 - CHANGE Pt. No. to read 200-0602-03
Item 24 - CHANGE Pt. No. to read 213-0248-00
Item 33 - CHANGE Pt. No. to read 214-0291-01
Item 39 - CHANGE to read Shaft Extension 3-17mm x 155mm 384-1604-00
Item 40 - DELETE
Item 42 - DELETE
Item 91 - ADD clip Spring 344-0263-00
Item 92 - ADD Cover Protection Assembly 016-0564-02
Item 93 - ADD Cabinet Top Cover 390-0520-00
Item 94 - ADD Grommet Solid 348-0522-00
Item 95 - ADD Spacer 4BA x 19mm lg. 361-0533-01
Item 96 - ADD Bracket stiffening 407-1807-00
Item 97 - ADD Plate stiffening 386-3552-00
Item 99 - Should read Item 115 (8 off Fxg 93)
Item 100 - ADD Screw 8BA rd hd x 5/16" slot
Item 116 - CHANGE to read 2½" not 2" 213-0564-01
Item 118 - CHANGE to read Screw s/t No. 4 c'sk hd x ½" 213-0371-00
Item 119 - DELETE
Item 122 - CHANGE to read ¼" not 3/16" 213-0365-01
Item 124 - ADD Washer 4BA Lock crinkle 210-1205-00 (F/W 93)
Item 125 - ADD Washer 8BA Shakeproof 210-1214-00

Item 136 - ADD Nut 8BA full 220-0718-00
Item 150 - ADD Plate Name 334-2049-05
Item 151 - ADD Marker Ident 334-2941-01 Opt. 66 334-2941-02 Opt. 68
Item 152 - ADD Marker Ident 334-2942-02
Item 153 - ADD Marker Ident 334-2943-01 Opt. 66 334-2943-02 Opt. 68
Item 154 - ADD Marker Ident 334-3692-00
Item 155 - ADD Label Mod Record 334-2752-00

(11) Page 7/1

ADD - ACCESSORIES

Flexible 'Plug-in' Extension Lead Pt. No. 067-0688-01
Rigid 'Plug-in' Extension Pt. No. 067-0689-00

TELEQUIPMENT

MANUAL AMENDMENT LIST

INSTRUMENT D755/V4	MANUAL PART NUMBER 070-1487-10	ISSUE 4	AMENDMENT LIST 1
S.O. NUMBER	BATCH NUMBER	DATE 12th December '80	PAGE 4 OF 9

DESCRIPTION OF AMENDMENT	STARTING SERIAL NUMBER

(1) Page 5/11

C605)
C606) - CHANGE to read 285-0850-01 1n PP 5 125V
C607)
C608)
C610 - CHANGE to read 285-1064-01 680p PP 5 125V
†C620 - CHANGE to read 285-0887-01 1n5 PP 5 125V
C750 - CHANGE to read 285-0854-01 PP 2.5 500V
C753 - CHANGE to read 285-0810-01 PP
C754 - CHANGE to read 285-0854-01 PP 2.5 500V
C758 - CHANGE to read 285-0759-01 PP
*C901 - CHANGE Pt. No. to read 285-0772-03
*C908 - CHANGE to read 285-0872-01 PP 2.5 500V
C921 - CHANGE to read Rating 400

(2) Page 5/12

R685 - CHANGE Pt. No. to read 317-0162-01

(3) Page 5/14

TR752 - CHANGE Pt. No. to read 151-0242-00
CHANGE *Attenuator to read *Attenuator Assy.

(4) Page 5/15 Mechanical Parts List & *View

Item 2 - CHANGE Pt. No. to read 386-2301-01
Item 16 - CHANGE Pt. No. to read 384-0843-01
Item 61 - CHANGE to read Screw s/t No 4 c'sk hd x ¼"
Pt. No. 213-0365-01

*CAM Item 34 DELETE Screw Item 27 as shown part section

MANUAL/AL D755/V4

(5) Page 5/15 Continued

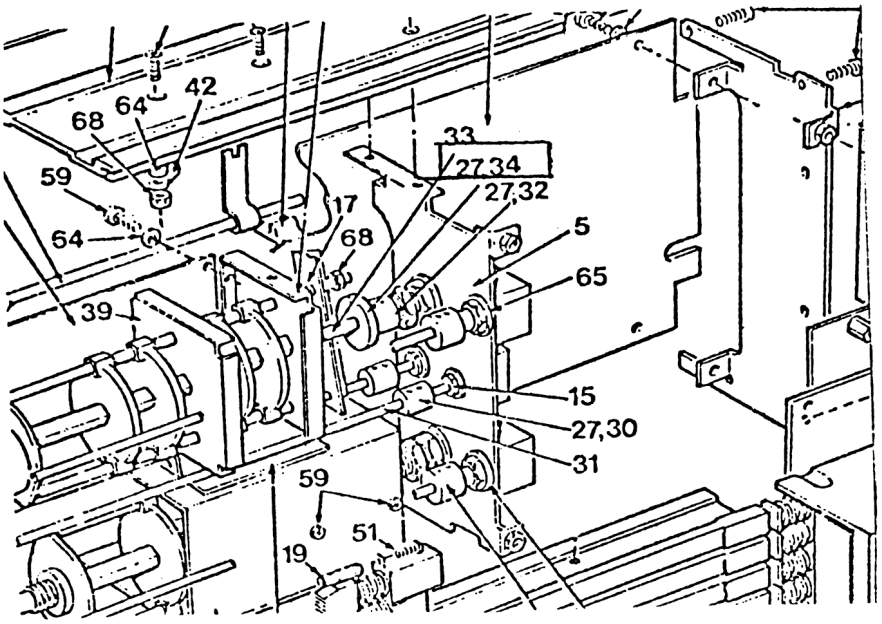

†Part of Figure (2)

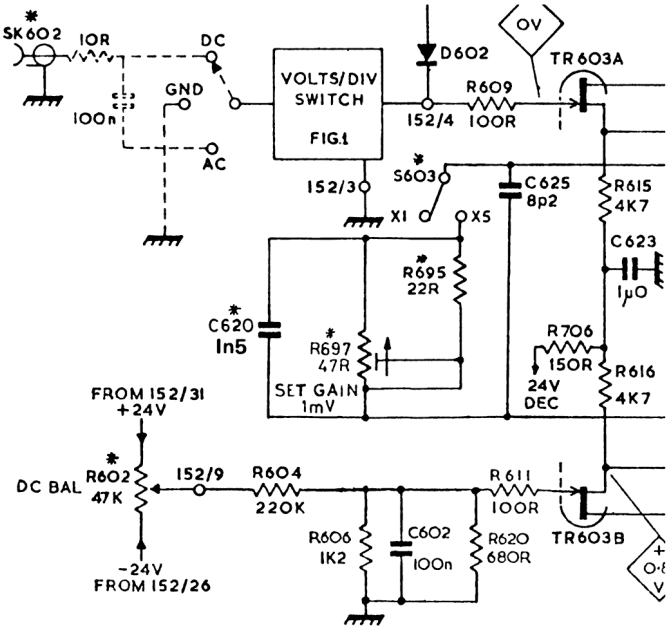

TELEQUIPMENT

MANUAL AMENDMENT LIST

INSTRUMENT 755/S2C	MANUAL PART NUMBER 070-1487-10	ISSUE 4	AMENDMENT LIST 1
S.O. NUMBER	BATCH NUMBER	DATE 12th December '80	PAGE 6 OF 9

DESCRIPTION OF AMENDMENT	STARTING SERIAL NUMBER

(1) Page 5/17

C11 - CHANGE to read 285-0847-01 Type PP
C13 - CHANGE to read 281-0856-00 56p CER 5 50
C61 - CHANGE to read 285-0871-01 150p PP 5 500
C79 - CHANGE to read 281-0855-00 47p CER 5 50
C81 - CHANGE to read 285-0873-01 200p PP 5 500
C159 - CHANGE to read 285-0854-01 100p PP 2.5 500
C195 - CHANGE to read 281-0859-00 75p CER 5 400
C196 - CHANGE to read 285-0873-01 200p PP 5 500
C198 - CHANGE to read 285-0870-01 120p PP 2.5 500
C207 - CHANGE to read 285-0850-01 1n PP 5 125
C208 - CHANGE to read Tol +80-20 Rating 250
C272 - CHANGE to read 285-0874-01 Type PP

(2) Page 5/20

R288 - CHANGE to read Pt. No. 317-0912-01

(3) Page 5/22 Assemblies

'B' Sweep & Trigger 670-3681-01 PC188

Should read
C151 to C159,C192 to C199, C201 to C205,C207,C208,D3,D81,D193,D197 to D199,D201 to D204, R12,R151,R152,R154 to R159,R161 to R169, R171 to R177, R191 to R198, R200 to R209,R211 to R216,R219,R221 to R239,R241 to R243, RL191,S151,S152,TR151 to TR155, TR191 to TR197

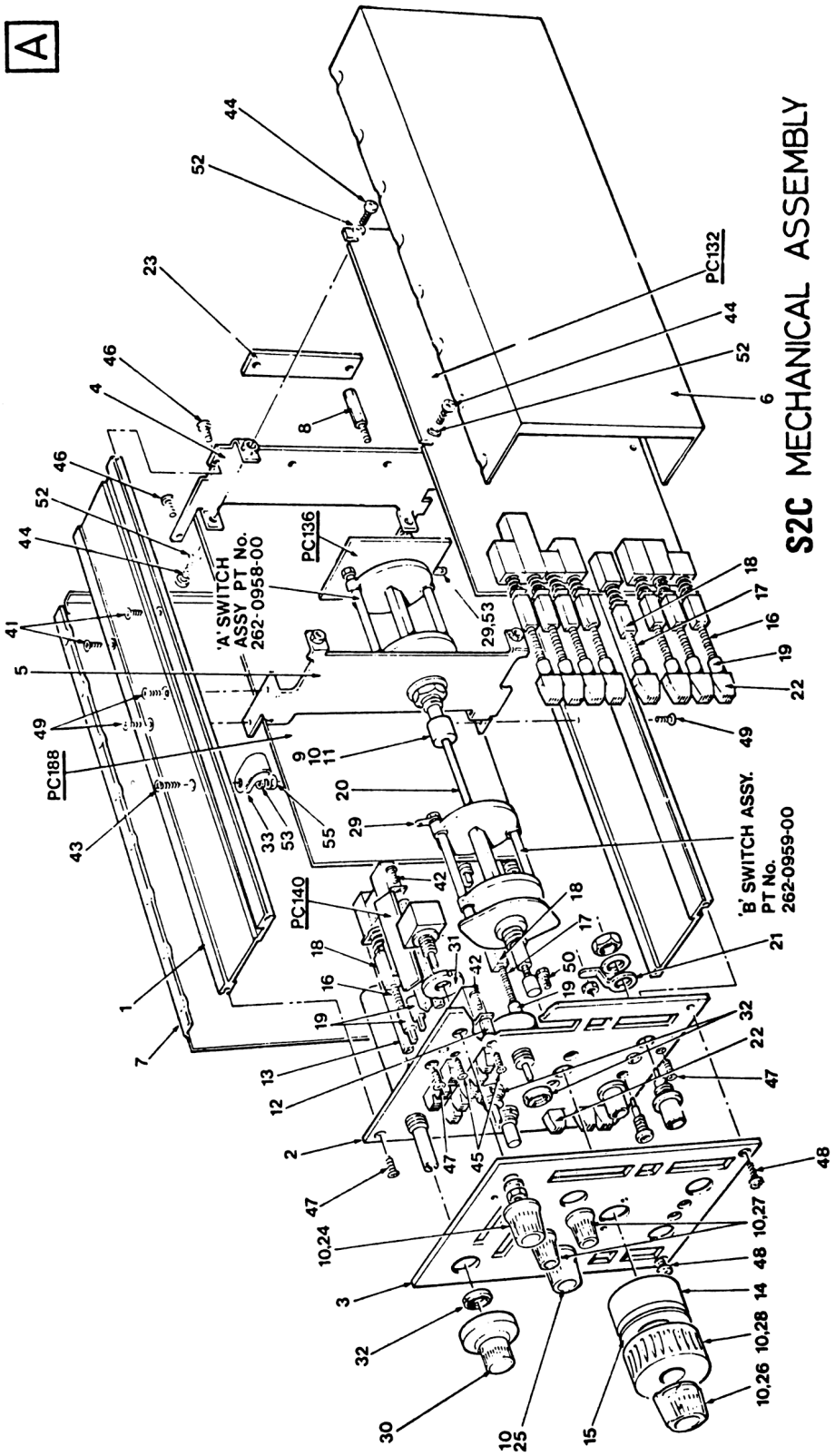
A
S2C MECHANICAL ASSEMBLY
'A' SWITCH ASSY PT No. 262-0958-00
'B' SWITCH ASSY. PT No. 262-0959-00
PC132
PC136
PC140
PC188

MECHANICAL ASSEMBLY S2C

(Item numbers refer to the view)

Item	Description	Part No.
1	Bar	381-0335-02
2	Panel sub-front	386-2300-00
3	Panel front	333-1761-04
4	Bracket rear	407-1079-00
5	Bracket pcb	407-1080-01
6	Shield side	337-1661-01
7	Shield side	337-1662-04
8	Stop	105-0347-00
9	Coupling	376-0137-01
10	Screw skt hd cup point M3x3	213-0248-00
11	Screw skt hd cup point M3x5	213-0249-00
12	Spacer 6BA/8BA x ½"	385-0206-00
13	Spacer 6BA/8BA x 59.0mm	385-0206-03
14	Spacer special	361-0478-00
15	Dial time/div	331-0316-00
16	Rod extension	384-1141-08
17	Rod extension	384-1141-02
18	Coupling	376-0132-00
19	Coupling	376-0136-00
20	Shaft extension	384-1048-01
21	Solder tag 3/8" i/d	210-0275-00
22	Push button	366-1403-00
23	Plate name	334-1933-02
24	Knob assembly	366-1238-00
25	Knob assembly	366-1239-02
26	Knob assembly	366-1289-00
27	Knob assembly	366-1266-00
28	Knob assembly – transparent	366-1386-00
29	Solder tag 6BA	210-0297-00
30	Turns counting dial	331-0317-00
31	Washer special	210-1177-00
32	Nut chrome special	220-0527-00
33	Cleat	343-0191-00
41	Screw 8BA c'sk hd x ¼" slot	213-0454-00
42	Screw 8BA rd hd x ¼" slot	213-0732-00
43	Screw 6BA c'sk hd x 3/16"	213-0467-00
44	Screw 6BA pan hd x ¼"	213-0393-00
45	Screw 6BA c'sk hd x ¼"	213-0391-00
46	Screw 4BA pan hd x ¼"	213-0388-00
47	Screw 4BA c'sk hd x ¼"	213-0570-01
48	Screw 4BA inst hd x ¼" chrome	213-0572-00
49	Screw s/t No. 4 c'sk hd x 3/16"	213-0362-00
50	Screw s/t No. 4 pan hd x ¼"	213-0366-00
52	Washer 6BA crinkle	210-1208-00
53	Washer 6BA plain	210-1209-00
55	Nut 6BA full	220-0716-00

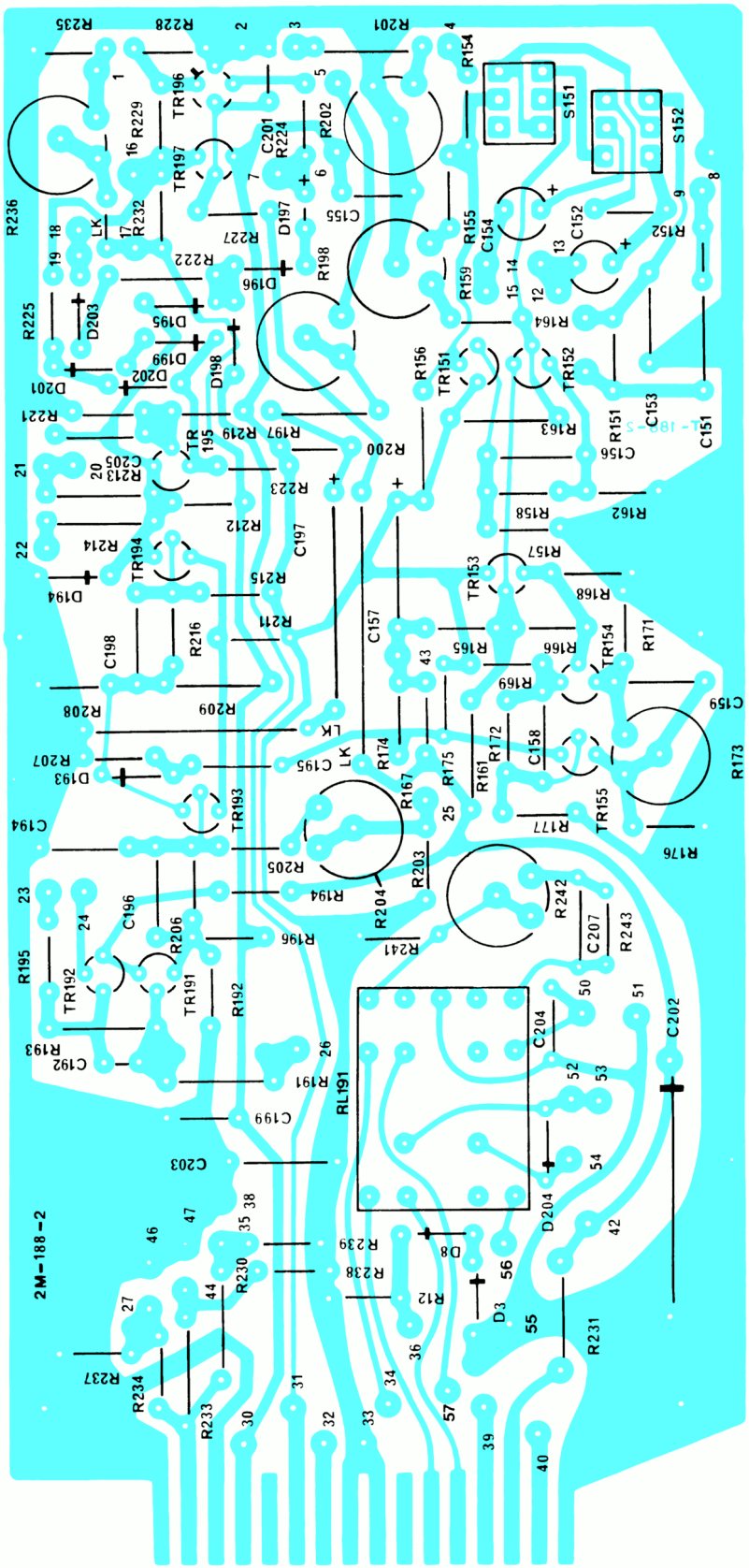
2M-188-2
RL191
S151
S152
TR151
TR152
TR153
TR154
TR155
TR191
TR192
TR193
TR194
TR195
TR196
TR197

PC188