Tektronix®
COMMITTED TO EXCELLENCE

464 AND 466 OPTION 10

SERVICE SUPPLEMENT

INSTRUCTION MANUAL

Tektronix, Inc.
P.O. Box 500
Beaverton, Oregon 97077

Serial Number _____

061-2172-00

FIRST PRINTING MAY 1979

OPTION 10

INTRODUCTION

Option 10 for the 464 and 466 Storage Oscilloscopes provides more-versatile vertical mode controls and full-time trigger view. Full-time trigger view permits the user to compare the trigger signal with the Channel 1, Channel 2, or Add signal.

The Option 10 vertical mode controls permit the display of any combination of Channel 1, Channel 2, and Trigger View in either Chopped or Alternate mode.

Pressing the TRIG VIEW button causes the signal connected to the A TRIGGER external connector to be displayed when the A TRIGGER SOURCE control is in the EXT or EXT ÷ 10 position. The trigger-view display is positioned with the A TRIGGER LEVEL control.

Figure Option 10-1 shows Vertical Mode and Bandwidth Limit controls.

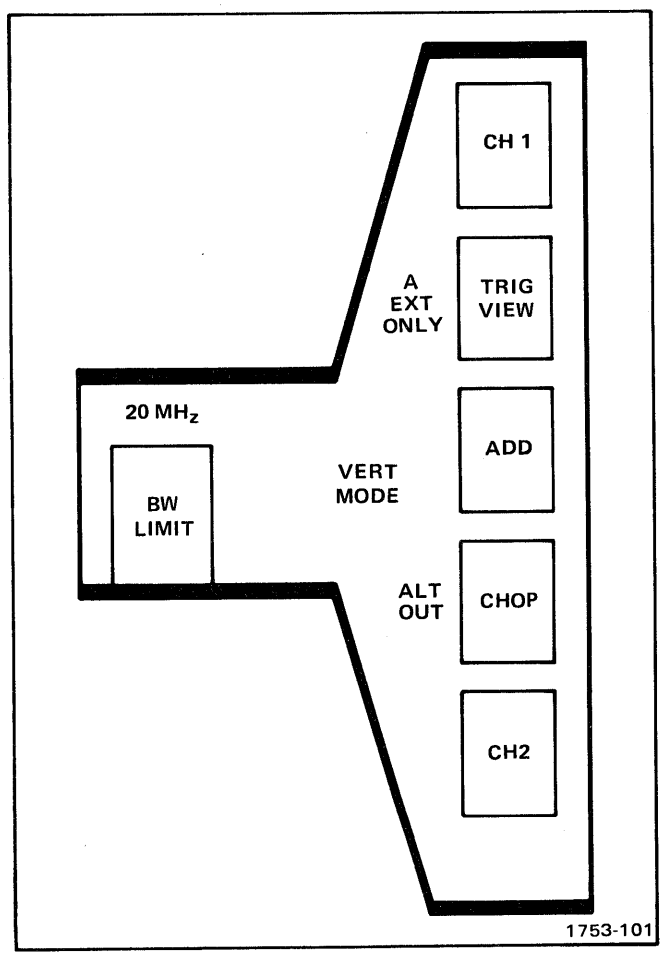

Figure Option 10-1. Vertical Mode and Bandwidth Limit controls for 464/466.

Option 10 will operate with any other option except Option 5.

SPECIFICATION

AC Requirements

Same as non-Option 10 oscilloscopes.

Temperature

The same operating and non-operating ranges as oscilloscopes without Option 10.

Electrical Characteristics

Same as non-Option 10 oscilloscope except as follows:

Characteristic	Performance Requirement
Deflection Factor of Trigger View Signal (the A Trigger)	
EXT	100 mV/div ±5%
EXT ÷ 10	1 V/div ±5%
Centering of Triggering Point	Within 1.0 division of center screen.

SAFETY CONSIDERATIONS

Option 10 becomes an integral part of the 464 and 466 oscilloscopes. The safety considerations for the non-Option 10 oscilloscopes apply.

FUNCTION OF CONTROLS

VERT MODE Controls

CH 1—When pressed in, displays Channel 1 signal. To end the signal display, release the CH 1 button by pressing it.

TRIG VIEW—When the TRIG VIEW button is pressed in and the A TRIGGER SOURCE control is in EXT or EXT ÷ 10 position, the signal applied to the external trigger connector is displayed. To end the display of the signal at the external trigger connector, release the TRIG VIEW button by pressing it.

ADD—When pressed in, displays the algebraic sum of the Channel 1 and Channel 2 input signals. To end the ADD mode display, release the ADD button by pressing it.

CHOP/ALT—When pressed in, the oscilloscope circuitry switches between two or more of the displayed sweeps at a 500 kHz rate.

When released, the oscilloscope circuitry switches between two or more of the displayed sweeps at the end of each sweep (i.e., it Alternates).

CH 2—When pressed in, displays Channel 2 input signal. To end the signal display, release the Ch 2 button by pressing it.

20 MHz BW LIMIT Switch—When pressed in, limits the bandwidth of the vertical deflection system to 20 MHz. When released the bandwidth is 100 MHz.

OPERATING INSTRUCTIONS

Operating the 464 or 466 with Option 10 is similar to operating a non-Option 10 instrument.

The Trigger View and Bandwidth Limit functions have separate controls in the Option 10 instrument. The TRIG VIEW button latches when pressed in, permitting the operator to view the trigger signal without holding the button in. The Chop and Alternate functions are controlled by a single button. When the CHOP/ALT button is pressed in, the display is chopped (if two or more vertical displays are selected). When the CHOP/ALT button is released the displays alternate at the end of each sweep, provided two or more vertical displays are selected.

CIRCUIT DESCRIPTION

This section contains a description of the circuitry in Option 10 instruments that differs from the standard 464 and 466 Oscilloscopes. The circuits are described in the following order.

Channel 1 Preamplifier

- Input Coupling
- Input Attenuator
- Source Follower
- First Amplifier
- Second Amplifier

Channel 2 Preamplifier

- First Amplifier

Vertical Switching Logic

- Gate Control
- Finding the Outputs of ROM U3605
- Channel 1 Only
- Channel 2 Only
- External Trigger View Only
- Chop Clock and Alternate Logic
- Add Mode
- X-Y Mode
- Delay-Line Driver
- Normal Trigger Pickoff Amplifier
- Chopped Blanking Amplifier

Vertical Mode Switch

- Exclusive-NOR Circuits
- Scale-Factor Switching

Channel 1 Preamplifier, Diagram 15

Introduction. The Channel 1 Preamplifier circuit provides control of input coupling, vertical deflection factor, gain, and dc balance. Input signals for display on the crt are connected to the CH 1 OR X input connector. When the TIME/DIV control is set to the X-Y position, the input signal applied to the CH 1 OR X connector causes horizontal (X-axis) deflection.

Input Coupling. Signals applied to the input connector can be ac coupled, dc coupled or internally disconnected from the input to the Vertical Amplifier. When input coupling switch S30A is set to DC, the input signal is coupled directly to the input attenuators. When the input coupling switch is set to AC, the input signal reaches the attenuators via C12, which blocks the dc component. With S30A in the GND position, the input of the amplifier is connected to ground via R15. This provides a ground reference without the need to disconnect the input signal. Resistor R14 provides a high resistance across input coupling switch S30A, allowing C12 to precharge when the switch is in GND position. Therefore, the trace remains within the viewing area of the crt when the coupling switch is moved to AC position.

Input Attenuator. The effective overall deflection factor of each vertical channel of the oscilloscope is determined by the setting of the VOLTS/DIV controls. The basic deflection system is 5 mV/division of crt deflection. To achieve the deflection factor values marked on the front panel, precision attenuators are switched into the input to the Vertical Preamplifier.

For VOLTS/DIV positions above 5 mV, frequency-compensated voltage dividers (attenuators) are switched into the circuit to produce the vertical deflection factors indicated on the front panel. Each channel has 2X, 4X, 10X, and 100X attenuators which are used in combinations. The attenuation ratios are constant at all frequencies within the bandwidth of the instrument. The input attenuators maintain the same input characteristics (1 MΩ and about 20 pF) for each setting of the VOLTS/DIV control. Each attenuator has an adjustable series capacitor to provide correct attenuation at high frequencies and an adjustable shunt capacitor to provide correct input capacitance.

NOTE

Each attenuator is a hybrid encapsulated plug-in assembly. Individual components in the attenuator cannot be replaced. The attenuator must be serviced as a unit.

Source Follower. The Channel 1 signal from the input attenuator reaches Source Follower Q3297A via R42, C42, and R45. Resistor R39 provides the input resistance and R45 functions as a damping resistor. Q3297B is a constant-current source for Q3297A. Together, Q3297A and B provide high input impedance for the attenuators and the current drive needed for the First Amplifier.

In the event that excessively-high-amplitude signals are applied to Q3297A, they will be limited by CR3298 and the gate-source junction of Q3297A. If the negative signal amplitude forward-biases CR3298, the gate of Q3297A is clamped to about −8.7 V. Excessive positive signal amplitude will forward-bias the gate-source junction of Q3297A. When gate current flows, the gate voltage will stop increasing. Gate current is limited to a safe value by the high resistance of R42.

First Amplifier. The First Amplifier stage is an integrated emitter-coupled, push-pull, cascode amplifier, U3290. The input signal on pins 13 and 16 is converted from a single-ended to a push-pull signal by a paraphase amplifier. It is then fed to common-base stage Q3175 and Q3375. The CH 1 VAR VOLTS/DIV control connects to pin 11 of U3290 and provides variable vertical deflection. With the VAR control in its calibrated detent (wiper at ground), the A and D output transistors in U3290 are conducting. The B and C output transistors are reverse-biased. Thus the signal current available to the following amplifier stage is the collector current flowing in output transistors A and D.

When the VAR control is rotated out of its calibrated detent, the B and C output transistors in U3290 begin to conduct by amounts determined by the position of the VAR control. This causes two events:

1. The signal current in the A and D output transistors is reduced by the amount of current flowing in the B and C output transistors.

2. Output transistors A and C and output transistors B and D conduct currents of opposite polarities. The output of transistor C is summed with the output of transistor A to reduce the signal current available at pins 5 and 6, and the output current of transistor B is summed with the output current of transistor D to reduce the signal current available at pins 8 and 9.

The component values selected for the variable function provide a variable attenuation ratio of about 2.5 to 1. Channel 1 Variable Balance adjustment R3484 is adjusted so that the display does not shift when rotating the VAR control. When the Channel 1 VAR control is out of its calibrated detent the Channel 1 UNCAL indicator illuminates. The components connected between pins 2 and 3 of U3290 provide high-frequency compensation.

Transistors Q3175 and Q3375 are common-base amplifiers that convert the output current signals from U3290 into voltage signals for the Second Amplifier. Gain adjustment R3482 sets the overall gain of the Channel 1 Vertical Preamplifier by adjusting the signal voltage to the bases of Q3155 and Q3355.

Second Amplifier. Transistors Q3155 and Q3355, with Q3344 and Q3346 in the Vertical Switching circuit (Diagram 18 shows the Vertical Switching Logic), form push-pull cascode amplifiers. Voltage-variable capacitors CR3263, CR3264, and thermistor RT3267 compensate the high-frequency gain for varying ambient temperature. As temperature increases, the resistance of RT3267 decreases and the reverse-bias on CR3263 and CR3264 decreases. The capacitance of CR3263 and CR3264 increases as reverse-bias decreases. The resultant increase in capacity at higher temperatures provides additional high-frequency peaking to counteract the effects of increased temperature on the amplifier's bandwidth.

The push-pull signals at the emitters of Q3155 and Q3355 are converted to a single-ended signal by Q3150, Q3250, Q3045, and Q3145. The current signal from Q3145 is converted to a voltage signal by common-base amplifier Q3038 and applied to the bases of Q3125 and Q3028. Q3028 provides the output signal at the CH 1 VERT SIGNAL OUT connector on the instrument's rear panel. The output signal at the emitter of Q3125 serves as the trigger signal source in the CH 1 position of

the A TRIGGER SOURCE switch and as the signal source for emitter follower Q3004. When in the X-Y mode, Q3004 provides the X-axis signal from the Channel 1 Preamplifier to the Horizontal Amplifier. Diodes CR3014, CR3024, CR3023, and CR3013 protect the emitter circuit of Q3028 in the event large signals are accidentally connected to the CH 1 VERT SIGNAL OUT connector. Potentiometer R3126 adjusts the dc level of the CH 1 trigger source signal.

Potentiometer R3055 is the Channel 1 POSITION control. When set to mid-range, the constant current from Q3062 flows equally through each side of R3055. As the POSITION control is rotated from its mid-range position, one side of the amplifier conducts more current while the other side of the amplifier conducts less current. This action proportionally changes the amount of current flowing into the Delay-Line Driver, thus causing the trace to shift vertically on the crt. The mid-range operating point of the POSITION control is set by adjusting R3135.

Channel 2 Preamplifier, Diagram 16

Introduction. The Channel 2 Preamplifier circuit is practically the same as the Channel 1 Preamplifier circuit. Only the differences are described here. Input signals for vertical deflection on the crt reach the preamplifier via the CH 2 OR Y input connector. When the TIME/DIV switch is set to X-Y mode, the Channel 2 input signal provides the vertical (Y-axis) deflection.

First Amplifier. The First Amplifier stages of both channels operate similarly. However, the Channel 2 circuit includes the Invert switching function, which allows the Channel 2 display to be inverted. When pushed in, the INVERT control changes the biasing on the output transsistors of U3790 so that the normally inactive transistors (B and C) carry the signal. Because their outputs are cross-coupled from side to side, the output signal is of opposite polarity from the signal available when the INVERT control is in its normal position (button out). Channel 2 Invert Balance control R3975 allows the dc balance of the stage to be adjusted to eliminate trace shift when switching from a normal to an inverted display.

Vertical Switching Logic Diagram 18

Gate Control. The gate-control circuit operates three diode gates that connect the input(s) to the Delay-Line Driver.

A read-only memory (ROM), U3605, and a quad flip-flop (FF), U3705, form the gate-control circuit. The gate-control circuit responds to inputs from the front-panel VERT MODE control and the A TIME/DIV control by enabling the appropriate diode gate(s). The enabled gate(s) then pass signals to the Delay-Line Driver. Figure Option 10-2 shows details of the gate-control logic.

The ROM, U3605, is the heart of the switching logic circuitry. It has eight inputs—four from the VERT MODE control on the front panel, one from the A TIME/DIV control on the front panel, and three from FF U3705. The ROM produces a four-bit output, on its 0_4-0_1 lines, that governs the transistors controlling the diode gates and the chop clock generator.

The most-significant bit of U3605's output, 0_4 on pin 9, controls the chop clock generator. A high-logic level on the 0_4 output enables the chop clock generator.

Bits 0_3, 0_2, and 0_1 are connected to FF U3705. The output of U3805C clocks U3705 at the following times.

1. At the end of each sweep when the VERT MODE is set to ALT, or
2. At the rate of the chop clock generator when the VERT MODE is set to CHOP.

Depending on the mode selelcted, one or more of the gate-drive transistors will be activated. Via the respective gates, Q3619 controls the Channel 1 signal, Q3719 controls the Channel 2 signal, and Q3617 controls the Trigger View signal.

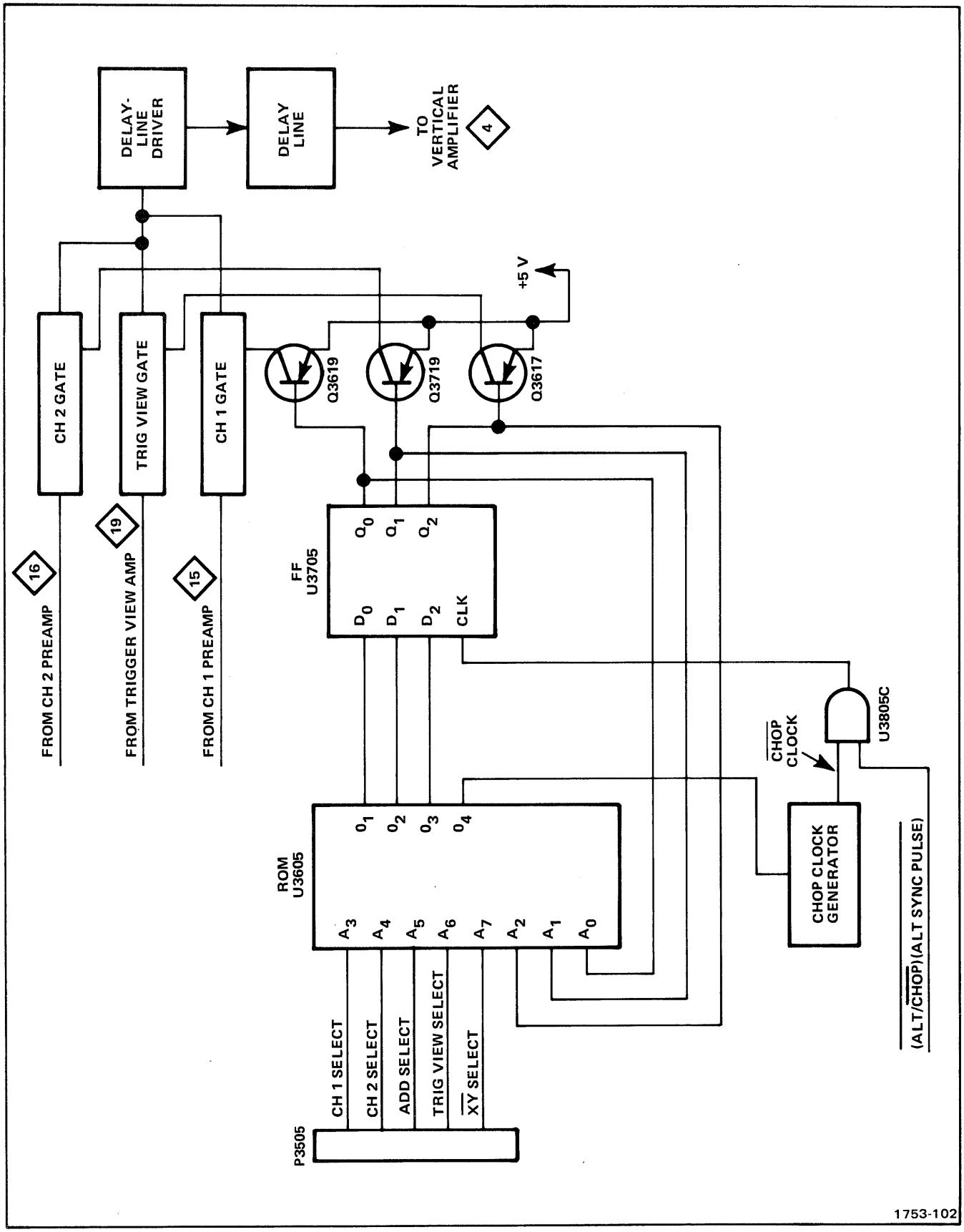

Figure Option 10-2. Simplified block diagram of gate-control logic.

Figure Option 10-3 shows the logic content of the memory cells in U3605. A "1" indicates a high-logic level. The digits within the heavy-lined border represent the 1024 memory cells.

Data in the column at the left side of Figure Option 10-3 represents the inputs to U3605 from the A TIME/DIV control and the VERT MODE control. The input from the A TIME/DIV control indicates whether it is in X Y position. The data in this column is considered "present" data.

The headings for the eight columns of ROM data represent the eight possible combinations of logic levels on the three feedback lines from U3705 to U3605. (Only four of these combinations are used in the Option 10 oscilloscope.) The levels on the feedback lines represent "past" data because the feedback lines activate the gate-drive transistors.

Figure Option 10-3 contains three categories of data, as follows.

1. The column of data at the left end represents the input to ROM U3605. It is called "present" data.

2. The eight column headings within the heavy-lined border represent the logic levels on the three feedback lines from U4705 to U3605. These three logic levels are "past" data relating to the oscilloscope's mode of operation.

3. The four-bit binary numbers within the heavy-lined border represent the logic levels on the ROM's four output lines. These numbers are data relating to the next mode of operation—the mode the oscilloscope will take after the next clock pulse occurs. These numbers represent "future" data.

Present Input Data (from S350)					Bits 2, 1, 0 (Past Data)							
7	6	5	4	3								
$\overline{XY}$	T. V.	ADD	CH 2	CH 1	$\overline{000}$	$\overline{001}$	$\overline{010}$	$\overline{\text{TRIG VIEW}}$ 011	$\overline{\text{ADD}}$ 100	$\overline{\text{CH 2}}$ 101	$\overline{\text{CH 1}}$ 110	$\overline{111}$
1	0	0	0	0	1111	1111	1111	1111	1111	1111	1111	0111
1	0	0	0	1	1110	1110	1110	1110	1110	1110	0110	1110
1	0	0	1	0	1101	1101	1101	1101	1101	0101	1101	1101
1	0	0	1	1	1110	1110	1110	1110	1110	1110	1101	1110
1	0	1	0	0	1100	1100	1100	1100	0100	1100	1100	1100
1	0	1	0	1	1110	1110	1110	1110	1110	1110	1100	1110
1	0	1	1	0	1101	1101	1101	1101	1101	1100	1101	1101
1	0	1	1	1	1110	1110	1110	1110	1110	1100	1101	1110
1	1	0	0	0	1011	1011	1011	0011	1011	1011	1011	1011
1	1	0	0	1	1110	1110	1110	1110	1110	1110	1011	1110
1	1	0	1	0	1101	1101	1101	1101	1101	1011	1101	1101
1	1	0	1	1	1110	1110	1110	1110	1110	1011	1101	1110
1	1	1	0	0	1100	1100	1100	1100	1011	1100	1100	1100
1	1	1	0	1	1110	1110	1110	1110	1011	1110	1100	1110
1	1	1	1	0	1101	1101	1101	1101	1011	1100	1101	1101
1	1	1	1	1	1110	1110	1110	1110	1011	1100	1101	1110
0	0	0	0	0	1101	1101	1101	1101	1101	0101	1101	1101
0	0	0	0	1	1101	1101	1101	1101	1101	0101	1101	1101
0	0	0	1	0	1101	1101	1101	1101	1101	0101	1101	1101
0	0	0	1	1	1101	1101	1101	1101	1101	0101	1101	1101
0	0	1	0	0	1101	1101	1101	1101	1101	0101	1101	1101
0	0	1	0	1	1101	1101	1101	1101	1101	0101	1101	1101
0	0	1	1	0	1101	1101	1101	1101	1101	0101	1101	1101
0	0	1	1	1	1101	1101	1101	1101	1101	0101	1101	1101
0	1	0	0	0	1101	1101	1101	1101	1101	0101	1101	1101
0	1	0	0	1	1101	1101	1101	1101	1101	0101	1101	1101
0	1	0	1	0	1101	1101	1101	1101	1101	0101	1101	1101
0	1	0	1	1	1101	1101	1101	1101	1101	0101	1101	1101
0	1	1	0	0	1101	1101	1101	1101	1101	0101	1101	1101
0	1	1	0	1	1101	1101	1101	1101	1101	0101	1101	1101
0	1	1	1	0	1101	1101	1101	1101	1101	0101	1101	1101
0	1	1	1	1	1101	1101	1101	1101	1101	0101	1101	1101
					$\overline{000}$	$\overline{001}$	$\overline{010}$	$\overline{011}$	$\overline{100}$	$\overline{101}$	$\overline{110}$	$\overline{111}$

Future Data

1753-103

Figure Option 10-3. ROM program for 464/466 mode control.

Finding the Outputs of ROM U3605. In this discussion we will assume the CHOP/ALT button is depressed.

1. In Figure Option 10-4, find the column that matches the present display on the screen of the oscilloscope.

   The column headings appear by name and number as Trigger View, 011; Add, 100; Ch 2, 101; and Ch 1, 110. The digits represent the logic levels on the feedback lines from FF U3705 to ROM U3605.

2. Locate the row of data that pertains to the new operating mode of the 464/466.

   Do this by looking in the "Present" data column at the left end of the table for a combination of 1's and 0's that represents the front-panel control settings. (A "1" represents a depressed pushbutton.) The left-most digit, bit 7, will be a "1" when the A TIME/DIV control is not in X Y position.

3. Find the four-bit binary number at the intersection of the row and column you located in steps 1 and 2. The outputs of U3605 should have these levels. Of the four bits, the most-significant, 0_4, controls the chop clock (1 means "run the clock"), and the other three mean "go to the column with this heading." The latter three bits identify the channel that will be displayed on screen when U3705 receives the next clock pulse.

4. Find the column whose heading number matches the last three bits of the number you located in step 3.

5. Locate the number appearing at the intersection of this new column and the row you located in step 2.

6. Find the column whose heading matches the last three bits of the number you located in step 5.

7. Locate the number appearing at the intersection of this column and the row you found in step 2.

Example

Given:	Vertical Mode	
	Presently displayed	CH 2
	Desired	CH 1 and TRIG VIEW (CHOP/ALT button pressed in)

Find: Logic levels at the outputs of U3605 for transition and operation.

Procedure: (Refer to Figure 10-4 for details of this procedure.)

a. Find column for present operating mode (CH 2).

b. Find row of data for CH 1 and TRIG VIEW. This row has digits 11001, which means:

   CH 1

   TRIG VIEW

   A TIME/DIV is not in X Y position

c. Find the number at the intersection of the column and row you located in parts a and b. The number is 1110, which means:

   run the chop clock

   go to column headed 110 (CH 1)

   This means that CH 1 will be displayed when U3705 receives the next clock pulse.

d. Find the number at the intersection of column 110 (CH 1) and the row of part b. The number is 1011, which means:

   run the chop clock

   go to column headed 011 (TRIG VIEW)

   This means that the TRIG VIEW signal will be displayed when U3705 receives the next clock pulse.

e. Find the number at the intersection of column 011 and the row found in part b. The number is 1110, which means:

   run the chop clock

   go to column headed 110 (CH 1)

   The sequence of operations we find in parts c, d, and e shows that the ROM and FF should operate in a CH 1, TRIG VIEW, CH 1 ... sequence.

Bits 7	6	5	4	3	Bits 2, 1, 0							
Not in X-Y Mode								TRIG VIEW	ADD	CH 2 (a)	CH 1	
XY	T. V.	ADD	CH 2	CH 1	000	001	010	011	100	101	110	111
1	0	0	0	0	1111	1111	1111	1111	1111	1111	1111	0111
1	0	0	0	1	1110	1110	1110	1110	1110	1110	0110	1110
1	0	0	1	0	1101	1101	1101	1101	1101	0101	1101	1101
1	0	0	1	1	1110	1110	1110	1110	1110	1110	1101	1110
1	0	1	0	0	1100	1100	1100	1100	0100	1100	1100	1100
1	0	1	0	1	1110	1110	1110	1110	1110	1110	1100	1110
1	0	1	1	0	1101	1101	1101	1101	1101	1100	1101	1101
1	0	1	1	1	1110	1110	1110	1110	1110	1100	1101	1110
1	1	0	0	0	1011	1011	1011	0011	1011	1011	1011	1011
1	1	0	0	1	1110	1110	1110	1110	1110	1110	1011	1110
b→ 1	1	0	1	0	1101	1101	1101	1101 e	1101	1011 c	1101 d	1101
1	1	0	1	1	1110	1110	1110	1110	1110	1011	1101	1110
1	1	1	0	0	1100	1100	1100	1100	1011	1100	1100	1100
1	1	1	0	1	1110	1110	1110	1110	1011	1110	1100	1110
1	1	1	1	0	1101	1101	1101	1101	1011	1100	1101	1101
1	1	1	1	1	1110	1110	1110	1110	1011	1100	1101	1110
0	0	0	0	0	1101	1101	1101	1101	1101	0101	1101	1101
0	0	0	0	1	1101	1101	1101	1101	1101	0101	1101	1101
0	0	0	1	0	1101	1101	1101	1101	1101	0101	1101	1101
0	0	0	1	1	1101	1101	1101	1101	1101	0101	1101	1101
0	0	1	0	0	1101	1101	1101	1101	1101	0101	1101	1101
0	0	1	0	1	1101	1101	1101	1101	1101	0101	1101	1101
0	0	1	1	0	1101	1101	1101	1101	1101	0101	1101	1101
0	0	1	1	1	1101	1101	1101	1101	1101	0101	1101	1101
0	1	0	0	0	1101	1101	1101	1101	1101	0101	1101	1101
0	1	0	0	1	1101	1101	1101	1101	1101	0101	1101	1101
0	1	0	1	0	1101	1101	1101	1101	1101	0101	1101	1101
0	1	0	1	1	1101	1101	1101	1101	1101	0101	1101	1101
0	1	1	0	0	1101	1101	1101	1101	1101	0101	1101	1101
0	1	1	0	1	1101	1101	1101	1101	1101	0101	1101	1101
0	1	1	1	0	1101	1101	1101	1101	1101	0101	1101	1101
0	1	1	1	1	1101	1101	1101	1101	1101	0101	1101	1101
					000	001	010	011	100	101	110	111

1753-104

Figure Option 10-4. Sample sequence of outputs from ROM U3605.

Channel 1 Only. When the CH 1 VERT MODE button is pressed it causes a high-logic level on the CH 1 SELECT line. The CH 2 SELECT, ADD SELECT, and TRIG VIEW SELECT inputs to U3605 will be at low-logic levels and the $\overline{XY}$ SELECT line will be at a high-logic level.

This combination of inputs causes outputs of 0110 respectively, on the 0_4-0_1 outputs of U3605. The low-logic level on U3605's 0_4 output disables the chop clock. Via FF U3705, the 110 on the 0_3, 0_2, and 0_1 lines from ROM U3605 turn on gate-drive transistor Q3619 and turn off Q3719 and Q3617. When forward-biased, Q3619 saturates and conducts current through R3625 and R3626. This current develops about −2 V at the junction of R3625 and R3626, which is connected to the cathode of shunt diodes CR3443 and CR3447. (The diode gates consist of four diodes—two series diodes that pass the signal to the Delay-Line Driver and two shunt diodes that control the series diodes.) Because the anodes of CR3443 and CR3447 are at about −2.6 V, they are turned off, permitting signals from Q3344 and Q3346 to reach the Delay-Line Driver via series diodes CR3441 and CR3445.

The diode gates in the Trigger View and Channel 2 paths are both turned off by voltages of about −4.1 V on the cathodes of shunt diodes CR3432 and CR3434 (Trigger View) and CR3543 and CR3547 (Channel 2).

Channel 2 Only. When the CH 2 VERT MODE button is pressed it causes a high-logic level on the CH 2 SELECT line. The CH 1 SELECT, ADD SELECT, and TRIG VIEW SELECT inputs to ROM U3605 will be at low-logic levels and the $\overline{XY}$ SELECT line will be at a high-logic level.

This combination of inputs causes outputs of 0101 respectively, on the 0_4-0_1 outputs of U3605. The low-logic level on U3605's 0_4 output disables the chop clock. Via FF U3705, the 101 on the 0_3, 0_2, and 0_1 lines from ROM U3605 turn on gate drive transistor Q3719 and turn off Q3619 and Q3617. When forward-biased, Q3719 saturates and conducts current through R3724 and R3725. This current develops about −2 V at the junction of R3724 and R3725, which is connected to the cathode of shunt diodes CR3543 and CR3547. (The diode gates consist of four diodes—two series diodes that pass the signal to the Delay-Line Driver and two shunt diodes that control the series diodes.) Because the anodes of CR3543 and CR3547 are at about −2.6 V, they are turned off, permitting signals from Q3644 and Q3646 to reach the Delay-Line Driver via series diodes CR3541 and CR3545.

The diode gates in the Trigger View and Channel 1 paths are turned off by voltages of about −4.1 V on the cathodes of shunt diodes CR3432 and CR3434 (Trigger View) and CR3443 and CR3447 (Channel 1).

A External Trigger View Only. When the TRIG VIEW button is depressed it causes a high-logic level on the TRIG VIEW SELECT input line to ROM U3605. The CH 1 SELECT, CH 2 SELECT, and ADD SELECT inputs to U3605 will be at low-logic levels.

The output logic levels of ROM U3605 are 0011 on the 0_4-0_1 outputs, respectively. The low-logic level on 0_4 disables the Chop Clock generator. The 011 levels on 0_3, 0_2, and 0_1 cause FF U3705 to turn on gate-drive transistor Q3617 and turn off Q3619 and Q3719. The same bias levels as for "Channel 1 Only" reverse-bias the Trigger View channel's shunt diodes (CR3432 and CR3434), permitting the Trigger View signal to reach the Delay-Line Driver via series diodes CR3436 and CR3438.

The Trigger View channel is also subject to the control of the $\overline{\text{TRIG VIEW ENABLE}}$ line. When the A TRIGGER SOURCE switch is in EXT or EXT ÷ 10 and the TRIG VIEW button is pressed in, the $\overline{\text{TRIG VIEW ENABLE}}$ line is at a low-logic level, permitting the diode gate and common-base transistors Q3225 and Q3235 to function normally. When the A TRIGGER SOURCE switch is not in EXT or EXT ÷ 10 or when the TRIG VIEW button is not pressed in, the $\overline{\text{TRIG VIEW ENABLE}}$ line is at a high-logic level. A high-logic level on the $\overline{\text{TRIG VIEW ENABLE}}$ line reverse-biases Q3225 and Q3235.

Chop Clock and Alternate Logic. The Chop Clock generator produces pulses for switching between vertical displays at a rate independent of sweep speed. The operating frequency of the generator is about 1 MHz.

When the ALT/CHOP button is pressed in and the VERT MODE control is set to more than one display, the Chop Clock generator operates. To present multiple displays, the Chop Clock and Alternate Logic circuit generates pulses to clock FF U3705. Components U3905B, U3805A, R3903, R3904, and C3804 form the Chop Clock generator.

When more than one channel is selected and the ALT/CHOP button is pressed in (Chop mode), a high-logic level from U3605's 0_4 output will enable U3805B and U3905D. A low-logic level on the ALT/$\overline{\text{CHOP}}$ SELECT line disables U3905D, whose output, a high-logic level, activates U3805B. (Before U3805B was activated, its output was a low-logic level which kept U3905B disabled.) When activated, U3805B activates U3905B by asserting a high-logic level on the pin 5 input of U3905B. Now that U3905B is active, the low-logic level at its output causes C3804 to discharge toward a low-logic level. When the voltage on C3804 reaches the low threshold voltage of U3805A, that gate switches to a low-logic level output. The low-logic level from U3805A disables U3905B, causing U3905B to switch to a high-logic level. Now C3804 starts charging toward a high-logic level. When the voltage on C3804 reaches the high threshold voltage of U3805A, U3805A switches to a high-logic level output and the cycle repeats. The operating frequency of the chop generator is about 1 MHz. This is determined by the RC time constant of R3903 and C3804 and the threshold levels of U3805A. Figure Option 10-5 shows details of the waveform at the junction of R3903 and C3804.

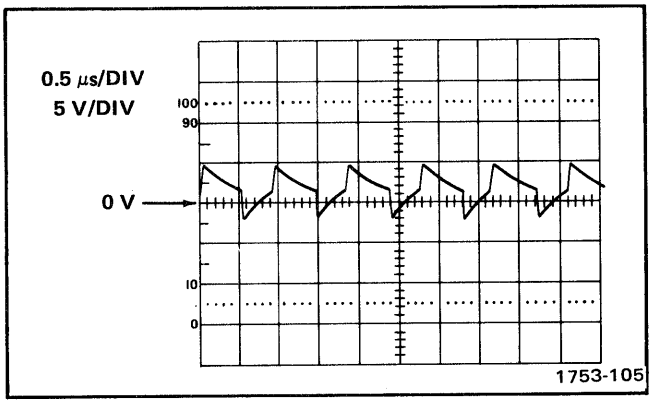

Figure Option 10-5. Waveform at the junction of R3903 and C3804.

When the ALT/CHOP control is set to CHOP, a low-logic level on the ALT/CHOP SELECT line disables U3905A. The output of U3905A will be a high-logic level that enables U3805C, which will pass the output of the chop generator to the gate-control circuit and the crt-blanking circuitry.

Because FF U3705 responds only to positive-going transitions, the chop frequency is half the frequency of the chop generator, or about 500 kHz.

When the setting of the VERT MODE control calls for a multiple-trace chopped display, FF U3605 responds to pulses from the chop generator by sequentially activating gate-drive transistors Q3619, Q3719, and Q3617. The sequence of switching is CH 1, CH 2, ADD, and TRIG VIEW. The outputs of U3705, which control the gate-drive transistors, are connected to ROM U3605. Refer to "Gate Control" discussion for details of that circuitry.

When the ALT/CHOP control is set to ALT, the ALT/$\overline{\text{CHOP}}$ SELECT line will be at a high-logic level. The high-logic level on ALT/$\overline{\text{CHOP}}$ SELECT has two effects, as follows.

1. The high-logic level on the ALT/$\overline{\text{CHOP}}$ SELECT line enables U3905D. Whenever an operator selects a multiple display while U3905D is enabled, U3905D will be activated and will stop the chop generator.

2. The high-logic level on the ALT/$\overline{\text{CHOP}}$ SELECT line enables U3905A, which will then be activated by the VERT ALT SYNC PULSE. When activated, U3905A disables U3805C. At the end of the sweep, U3905A, now disabled, produces a high-logic level that again activates U3805C. The positive-going edge of U3805C's output clocks FF U3705. Flip-flop U3705 will now switch among the selected inputs at a rate set by the VERT ALT SYNC PULSEs.

   If the VERT MODE control is set for a single display the 0_4 output of U3605 will be at a low-logic level, disabling the chop generator via U3805B. When just one display is selected, FF U3705 receives clock pulses but does not change state.

Add Mode. The ROM U3605 is programmed to turn on the diode gates for both CH 1 and CH 2 when the ADD button is depressed. (The Add display is independent of the position of the CH 1 and CH 2 buttons.) When the ADD button is depressed, the Q_0 and Q_1 outputs of U3705 will be at low-logic levels, turning on gate-drive transistors Q3619 and Q3719. The $\overline{Q_0}$ and $\overline{Q_1}$ lines will be at high-logic levels, activating U3805D. The output of U3805 turns on Q3636, which furnishes current to the junction of R3532 and R3534 to maintain the correct input voltage to the Delay-Line Driver.

X Y Mode. When the TIME/DIV control is set to X Y it causes a low-logic level on the $\overline{\text{XY}}$ SELECT line. The ROM U3605 responds to the $\overline{\text{XY}}$ SELECT signal with outputs of 0010 on its 0_4-0_1 lines. These levels disable the chop clock and turn on channel 2 gate-drive transistor, Q3719. Transistor Q3719 turns on the channel 2 diode gate, which connects channel 2 to the Delay-Line Driver as the Y part of the display. The CH 2 button need not be depressed, because U3605 accepts only the Channel 2 input when the TIME/DIV control is in X Y position.

Delay-Line Driver. The Delay-Line Driver accepts the output of the diode gate(s) and, via the delay line, drives the input of the vertical output amplifier.

Transistors Q3426 and Q3428 form the driver amplifier. Part of Q3426's output is the input to the trigger amplifier, Q3215 and Q3118. When closed, 20 MHz BW switch S3414 connects a pi filter between the output terminals of the delay line to reduce the upper −3 dB point of the vertical system to about 20 MHz. The pi filter consists of C3306, C3405, L3412, and L3512. R3314 and R3514 are termination resistors.

Normal Trigger Pickoff Amplifier. The trigger pickoff amplifier furnishes a sample of the signal from the Delay-Line Driver to the trigger circuits. The trigger circuits will use this signal when one or both Trigger SOURCE control(s) is (are) set to NORM.

Transistors Q3215, Q3118 and associated parts form the Normal Trigger Pickoff Amplifier. Part of the output of Q3426, in the Delay-Line Driver, is the input to the trigger amplifier. Potentiometer R3202, Norm Trig DC Bal, controls the dc level of Q3118's collector voltage so that when the Trigger LEVEL control is set to zero, the sweep will trigger at the zero-volt level of the displayed signal.

Chopped Blanking Amplifier. When the ALT/CHOP button is in CHOP, a low-logic level on the ALT/$\overline{\text{CHOP}}$ SELECT line disables U3905D. The high-logic level at U3905D's output enables U3905C to pass the output of the chop generator. Capacitor C3813 and R3916 differentiate the Chop pulse to produce the fast-rise spikes needed for blanking pulses. Diode CR1918 limits the positive spike and R3815 limits the base current in Q3812. The positive-going part of the waveform reverse-biases Q3812. The negative-going spike drives Q3812 rapidly into conduction. The blanking time is determined by the charging time of C3813 via R3916 and R3815. The positive-going output pulse, which is coincident with trace switching, is connected to the Z-Axis Amplifier via R3914.

Vertical Mode Switch, Diagram 17

The Vertical Mode switch produces the logic necessary to put the Vertical Switching Logic circuit into the correct state for the selected vertical mode. The Scale-Factor Switching circuit selects the correct scale-factor lamp to be lighted. Diagram 17 shows these circuits.

Exclusive-NOR Circuits. The exclusive-NOR circuits produce a negative pulse on the ALT/$\overline{\text{CHOP}}$ SELECT line when any VERT MODE push button is actuated (pressed in). While the ALT mode is selected, the negative pulse will enable the chop generator to produce clock pulses to switch the Vertical Switching Logic circuit to the selected vertical mode for the next display.

When the CH 1 VERT MODE button is depressed, the condition of exclusive-NOR circuit U50C is as follows.

1. The pin 8 and 9 inputs are at high-logic levels. Capacitor C11 has charged to a high-logic level through R12.

2. The output, pin 10, is at a high-logic level.

When the CH 1 button is released, U50C's pin 9 input immediately receives a low-logic level, but because C11 is charged to a positive voltage, pin 8 stays at a high-logic level. The differing inputs activate U50C, which produces a low-logic level on the ALT/$\overline{\text{CHOP}}$ SELECT line that turns on the chop generator. Meanwhile, C11 is discharging toward a low-logic level via R12. When the voltage on C11 reaches U50C's low threshold voltage, U50C will be disabled and the ALT/$\overline{\text{CHOP}}$ SELECT line will revert to a high-logic level. The chop generator then stops.

The Trigger View, Add, and Channel 2 circuits work like the Channel 1 circuit.

When the ALT/CHOP control is set to CHOP, VERT MODE switch S350 grounds the ALT/$\overline{\text{CHOP}}$ SELECT line. The chop generator is then enabled continuously if two or more inputs are selected.

When the A TIME/DIV control is set to X Y, a −8 V level reaches the $\overline{\text{XY}}$ SELECT line via CR48 and R48. This level sets the Vertical Switching Logic circuit to the X Y mode of operation. The −8 V also reaches the ALT/$\overline{\text{CHOP}}$ SELECT line, via R51, to enable the chop generator when ALT is selected.

Scale-Factor Switching. The deflection factor of each channel is shown by indicator lamps behind transparent flanges on the VOLTS/DIV knobs. Because the Channel 1 and Channel 2 circuit work identically, only Channel 1 is described here.

When the oscilloscope is set to CH 1 or ADD mode, R29 is grounded either directly or, in ADD mode, through CR50. This voltage level on R29 saturates Q51, which provides a positive voltage to lamps DS52 and DS54. When J10 (the Channel 1 input connector) has a 1X probe, a coaxial cable, or no connection, the coding ring (at the base of the bnc connector) is at +1.2 V as set by R52 and Q52. The +1.2 V turns on Q52, whose output turns on DS52, the 1X indicator lamp. The output of Q52 also turns off Q54, which extinguishes DS54, the 10X indicator lamp.

When the user connects a 10X probe to J10, a contact in the bnc connector shorts the shield to the coding ring at the base of the connector. This connection grounds the base of Q52, turning off Q52 and 1X indicator DS52. The collector voltage of Q52 then turns on Q54, which lights 10X indicator DS54.

MAINTENANCE

The maintenance instructions in Section 4 of the 464 or 466 Service manual are applicable to the Option 10 instrument.

Obtaining Replacement Parts

Standard Parts. Most electrical and mechanical parts for Option 10 can be obtained through your local Tektronix Field Office or representative. However, you should be able

to obtain many of the standard electronic components from a local commercial source in your area. Before you purchase or order a part from a source other than Tektronix, Inc., please check the electrical parts list for the proper value, rating, tolerance, and description.

Special Parts. In addition to the standard electronic components, some special components are used in Option 10. These components are manufactured or selected by Tektronix, Inc., to meet specific performance requirements, or are manufactured for Tektronix, Inc., in accordance with our specifications. Most of the mechanical parts used in this instrument have been manufactured by Tektronix, Inc. Order all special parts directly from your local Tektronix Field Office or representative.

Ordering Parts. When ordering replacement parts from Tektronix, Inc., include the following information:

1. Instrument type.
2. Instrument serial number.
3. A description of the part (if electrical, include the circuit number).
4. Tektronix part number.

CALIBRATION

Introduction

This section has two parts: Part I—Performance Check is provided for those who wish to verify that this instrument meets the applicable electrical specifications without making internal adjustments. Part II—Adjustment and Performance Check provides a complete calibration procedure that includes adjustments and performance checks in addition to verifying that the controls function properly.

Part I—Performance check steps 1 through 3 in this Option 10 description should be performed in addition to all of the Performance Check steps that appear in Section 2 of the 464 or 466 Service Manual. For a complete check of your Option 10 instrument performance, perform these steps first, then all of the ones in the Service Manual.

Part II—Adjustment and Performance Check contains steps that should be substituted for (or added to) steps in the C. VERTICAL portion of the section 5 Calibration Section of the 464 or 466 Service Manual. The new steps in this procedure check or adjust those parts of the instrument that are different for Option 10 than comparable portions of standard 464 or 466 instruments. These new steps have the same numbers as the steps they replace. Added steps have new numbers. For a complete calibration of the 464 or 466 Option 10 instrument vertical circuitry, substitute the steps as directed in this procedure for steps of the same numbers in the Section 5 Calibration Procedure in the 464 or 466 Service Manual. When all of the steps in this procedure have been performed, Steps 22 and 23 of the D. TRIGGER portion in the 464 or 466 Service Manual Calibration procedure should be skipped when calibrating the trigger circuitry.

NOTE

Option 10 instrument Vertical Mode and Bandwidth Limiting controls function differently than those in non-Option 10 instruments. Set these controls as appropriate for your Option 10 instrument when performing the existing steps in the 464 or 466 Service Manual in conjunction with the steps in this procedure. For example, if the 20 MHz BW (PULL) setting is listed as "Pull out (shows yellow)", press the button in to provide 20 MHz bandwidth limiting on your Option 10 instrument.

Using These Procedures

NOTE

In this procedure, capital letters within the body of the text identify front-panel controls, indicators, and connectors on the oscilloscope (e.g., VOLTS/DIV). Initial capitalizing identifies controls, indicators, and connectors (e.g., Position) on associated test equipment (used in this procedure) and adjustments internal to the oscilloscope (e.g., Ch 2 Invert Balance).

If Check is the first word in the title of a step, an electrical specification is checked. If Adjust is the first word in the title, the step concerns one or more internal adjustments. And if Check/Adjust appears in the title, the step involves electrical specification checks and related adjustments.

The alphabetical instructions under each step (a, b, c, etc.) may contain CHECK, ADJUST, or INTERACTION as the first word of the instruction. These terms are defined as follows:

1. **CHECK**—indicates the instruction accomplishes an electrical specification check. Each electrical specification checked is listed in Table Option 10-1, Performance Check Summary (see Performance Check Summary discussion for more information).
2. **ADJUST**—describes which adjustment to make and the desired result. We recommend that the adjustments not be made if a previous CHECK instruction indicates that no adjustment is necessary.
3. **INTERACTION**—indicates that the adjustment described in the preceding instruction interacts with other circuits. The nature of the interaction is described and reference is made to the step(s) affected.

Performance Check Summary

Table Option 10-1, Performance Check Summary, lists the electrical specifications that are checked in Part I and Part II of this section. The table is intended to provide a convenient means for locating the procedures in Part I and Part II that check and/or adjust the instrument to meet the applicable electrical specifications.

TABLE OPTION 10-1

Performance Check Summary

Characteristic	Performance Requirement	Part I, Performance Check Procedure Title	Part II, Adjustment and Performance Check Procedure Title
Full-Time Trigger View	Signal applied to external trigger connector must be present on the crt when the A TRIGGER SOURCE control is in EXT or EXT ÷ 10 position and TRIG VIEW button is pressed in.	1. Check Function of Trigger View.	
Full-Time Trigger View	Signal from external trigger connector must be present on crt with CH 1, CH 2, ADD, or any combination, in chop or alternate mode when the A TRIGGER SOURCE control is in EXT or EXT ÷ 10 position and the TRIG VIEW button is pressed in.	2. Check Combination of Trigger View and Vertical Displays.	
Deflection Factor of Trigger View Signal	100 mV/div ±5% in EXT 1 V/div ±5% in EXT ÷ 10.	3. Check Deflection Factor of Trigger View Signal.	31. Check/Adjust Trigger View Gain and Centering
Var Bal and Var Indicator	Var Bal, ±0.2 division or less. Var Indicator must light when Var is out of its detent.		Check/Adjust Var Volts/Div Balance and Indicator: 7. CH 1 9. CH 2
Position Centering	With 24 division signal on crt, top of display can be positioned at or below center horizontal graticule line. Bottom of display can be positioned at or above center horizontal graticule line.		Check/Adjust Position Centering: 8. CH 1 11. CH 2
CH 2 Invert Balance	Trace shift is 0.2 division or less when display is inverted.		10. Check/Adjust CH 2 Invert Balance
Gain	With 20 mV applied and VOLTS/DIV set to 5 mV, display should be 4 divisions ±3%.		13. Check/Adjust Gain
Low-Frequency Compensation	Overshoot or rounding is ±3% or less.		17. Check/Adjust Low-Frequency Compensation

TABLE OPTION 10-1 (cont)

Characteristic	Performance Requirement	Part I, Performance Check Procedure Title	Part II, Adjustment and Performance Check Procedure Title
High-Frequency Compensation	Aberrations ±4% or less.		Check/Adjust High-Frequency Compensation: 20. CH 2 and Output 22. CH 1
Common-Mode Rejection Ratio	With 6-division display of 20 MHz, VOLTS/DIV at 20 mV, common-mode display 0.6 division or less (CMRR = 10:1 or more).		29. Check/Adjust Common-Mode Rejection Ratio
20 MHz Bandwidth Limit	With 6-division display of reference frequency, VOLTS/DIV at 20 mV, −3 dB point is 20 MHz ±20% (16-24 MHz).		30. Check Bandwidth Limit Operation
Trigger View Centering and Gain	With 0.5 V applied to A External Trigger input connector from Calibration Generator, A TRIGGER SOURCE set to EXT, display should be 5 divisions ±5% (5 ±0.25 div). Display should trigger symmetrically, within 1 division of center graticule line when A TRIGGER SLOPE is switched from + to −.		31. Check/Adjust Trigger View Centering and Gain
Trigger View Low-Frequency Compensation	With 1 kHz from Calibration Generator applied to A External Trigger connector, display amplitude at 5 divisions display has less than 10% rounding or overshoot (4.5 to 5.5 division).		32. Check/Adjust Trigger View Low-Frequency Compensation
Trigger View High-Frequency Compensation	With 5 divisions display of fast-rise signal from Calibration Generator connected to A External Trigger connector, aberrations on front corner are 10% or less (4.5 to 5.5 division).		33. Check/Adjust Trigger View High-Frequency Compensation

Test Equipment Required

The test equipment listed in Table Option 10-2, or its equivalent, is required for accomplishment of the Performance Check and Adjustment Procedure.

In Table Option 10-2 the Specifications given for the equipment are the minimum necessary to provide accurate results. Therefore, the equipment used must meet or exceed the listed specifications. Detailed operating instructions for the test equipment are not given here. Refer to the appropriate instruction manual if more information is required.

TABLE OPTION 10-2

Test Equipment Required

Description	Minimum Specifications	Purpose	Examples
1. Test Oscilloscope	Bandwidth, dc to 100 MHz; minimum deflection factor, 5 mV/division; accuracy, within 3%; dual trace.		a. TEKTRONIX 465 Osilloscope with 2 (included) 10X probes. b. TEKTRONIX 475 Oscilloscope with 2 (included) 10X probes.
2. Probe	Bandwidth—dc to 100 MHz Attenuation—10X Loading—10 MΩ.	Vertical gain adjustment.	a. TEKTRONIX P6105. b. TEKTRONIX P6106.
3. Calibration Generator	Standard-amplitude accuracy, within 0.25%; signal amplitude, 2 mV to 50 V; output signal, 1 kHz square wave. Fast rise repetition rate, 1 to 100 kHz; rise time, 1 ns or less; signal amplitude 100 mV to 1 V; aberrations, within 2%. High-amplitude output, 60 V pulse supplying at least 10 mA.	Vertical checks and adjustments. Trigger View checks and adjustments.	a. TEKTRONIX PG 506 Calibration Generator.[a] b. Standard Amplitude Calibrator (Amplitude Calibrator only). c. TEKTRONIX Type 106 Square Wave Generator (Fast rise and High Amplitude only.)
4. Sine-wave Generator, Leveled	Frequency, 350 kHz to above 100 MHz; output amplitude variable from 0.5 to 5.5 V peak-to-peak; output impedance; 50 Ω; reference frequency, 50 to 350 kHz; amplitude accuracy, constant within 3% of reference frequency as output frequency changes.	Positioning Centering. CMRR. Check BW Limit.	a. TEKTRONIX SG 503 Leveled Sine-wave Generator.[a] b. TEKTRONIX Type 191 Constant-Amplitude Generator.
5. Cable, Coaxial (2 required)	Impedance. 50 Ω; length, 42 inches; connectors, bnc.	Signal interconnection.	Tektronix Part Number 012-0057-01.
6. Cable, Coaxial (2 required)	Impedance, 50 Ω; length, 18 inches, connectors, bnc.	Signal interconnection.	Tektronix Part Number 012-0076-00.
7. Adapter	Connectors, GR874-to-bnc female.	Signal interconnection.[b]	Tektronix Part Number 017-0063-00.
8. Adapter	Connectors, GR874-to-bnc male.	Signal interconnection.[b]	Tektronix Part Number 017-0064-00.

TABLE OPTION 10-2 (cont)

Description	Minimum Specifications	Purpose	Examples
9. Adapter	Connectors, bnc male-to-miniature probe tip.	Signal interconnection.	Tektronix Part Number 013-0084-01.
10. Dual Input Coupler	Impedance, 50 Ω.	Vertical checks. CMRR checks.	Tektronix Part Number 067-0525-01.
11. Connector, T	Connectors, one bnc male; two bnc female.	Signal interconnection.	Tektronix Part Number 103-0030-00.
12. Attenuator 10X (2 required)	Attenuation: 10X Connectors: bnc Impedance: 50 Ω.	Vertical Compensation. Trigger adjustments.	Tektronix Part Number 011-0059-02.
13. Attenuator 5X	Attenuation: 5X Connectors: bnc Impedance: 50 Ω.	Vertical System Compen-pensation adjustments. Trigger adjustments.	Tektronix Part Number 011-0060-02.
14. Attenuator 2X	Attenuation: 2X Connectors: bnc Impedance: 50 Ω.	Vertical System Com-pensation. Trigger View adjustments.	Tektronix Part Number 011-0069-02.
15. Termination (2 required)	Connectors: bnc Impedance: 50 Ω Power: 2 W.	Signal termination.	Tektronix Part Number 011-0049-01.
16. Screwdriver	Length, 3-inch shaft, bit size, 3/32 inch.	Adjust variable resistors.	Xcelite R-3323.
17. Low-Capacitance Screwdriver	Length, 1-inch shaft, bit size, 3/32 inch.	Adjust all variable capaci-tors.	J.F.D. Electronics Corp. Adjustment Tool Number 5284.

[a]Requires a TM 500 Series power module.

[b]Needed only for a generator with GR connectors.

PART I—PERFORMANCE CHECK

Performance Check

Purpose. The following procedure is intended to be used for incoming inspection to determine the acceptability of newly purchased or recently recalibrated Option 10 instruments. This procedure does not check every facet of the instrument's calibration; rather it is concerned primarily with those portions of the instrument that are essential to measurement accuracy and correct operation. Removing the instrument's dust cover is not necessary to perform this procedure. All checks are made from the front panel.

This procedure provides a Performance Check of features unique to Option 10. Perform these steps first, then proceed with all of the steps in the Performance Check portion of Section 2 in the 464 or 466 Service Manual for a complete performance check of your Option 10 instrument.

Test Equipment Required. The following equipment is required to perform a complete Performance Check. For equipment specifications, purpose, and recommended types, see Table Option 10-2. (Numbers correspond to those listed in Table Option 10-2, Test Equipment.)

3. Calibration Generator

4. Leveled Sine-wave Generator

5, 6. Cables, Coaxial 50 Ω (two 18-inch and one 42-inch)

10. Dual Input Coupler

11. Connector, bnc T

15. Terminations, bnc, 50 Ω, (two)

Procedures. Before starting these procedures, allow the instrument to warm up for at least 20 minutes at an ambient temperature between +20° C and +30° C.

1. Check Function of Trigger View

a. Set instrument controls and make test setup as follows.

STEP 1. SETUP CONDITIONS

464/466 Controls

A SOURCE . . . . . .EXT
COUPLING . . . . . .DC
TRIG VIEW . . . . . .Pressed in
TIME/DIV . . . . . .1 ms

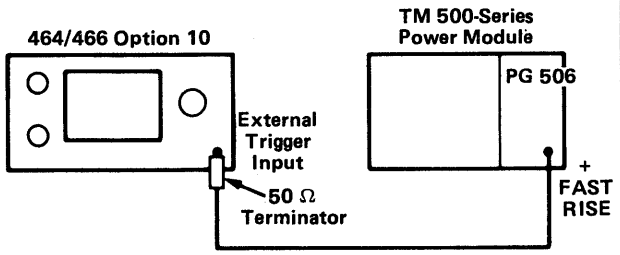

PG 506 Calibration Generator

PULSE AMPLITUDE. . . . . .To produce a 2-division display
PERIOD . . . . . .1 ms
Mode . . . . . .FAST RISE

1753-106

b. CHECK—that a signal of about 2 divisions amplitude can be brought on screen by moving the A TRIGGER LEVEL control.

c. Move the A TRIGGER SOURCE control to EXT ÷ 10.

d. Set the Pulse Amplitude control on the PG 506 to produce a 2-division display.

e. CHECK—the performance of the Trigger View in EXT ÷ 10 by repeating part b.

2. Check Combination of Trigger View and Vertical Displays

a. Set instrument controls and make test setup as follows.

STEP 2. SETUP CONDITIONS

464/466 Controls

Vert Mode
CH 1 . . . . . .Pressed in
TRIG VIEW . . . . . .Pressed in
HORIZ DISPLAY. . . . . .A
A TIME/DIV . . . .02 μs
X10 MAG . . . . . .Pressed in
A TRIGGER
SOURCE. . . . . .EXT
COUPLING . . . . . .AC
ALT/CHOP . . . . . .ALT (button out)
CH 1 VOLTS/DIV . . . .2 V

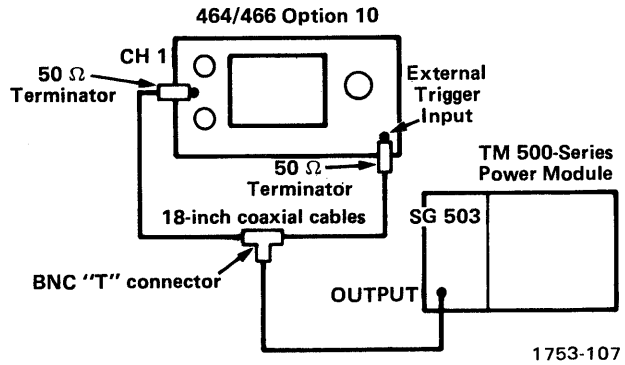

1753-107

b. Set signal generator frequency to 40 MHz and amplitude to produce a 2-division Trigger View display. The A TRIGGER LEVEL control will vertically move the Trigger View display.

c. CHECK—that the input to Channel 1 can be displayed simultaneously with the Trigger View display.

d. Move the input cable from the CH 1 input to the CH 2 input.

e. Press in the CH 2 button and release the CH 1 button.

f. CHECK—that the input to Channel 2 can be displayed simultaneously with the Trigger View display.

g. Press in the ADD and CH 1 buttons.

h. CHECK—that Channel 1, Channel 2, Add, and Trigger View can be displayed simultaneously. The display should be:

Channel 1	A trace with no vertical deflection.
Channel 2	A 2-division signal.
Add	A 2-division signal.
Trigger View	A 2-division signal.

@

i. Disconnect the 18-inch cable from the CH 2 input connector.

j. Connect the dual-input coupler to the CH 1 and CH 2 input connectors.

k. Connect the 18-inch coaxial cable from the T-connector to the input of the dual-input coupler.

l. Press in the CH 1, CH 2, and ADD VERT MODE buttons.

m. CHECK—that four displays are present—Channel 1, Channel 2, Add, and Trigger View.

n. Move the A TRIGGER SOURCE control to EXT ÷ 10.

o. Adjust the amplitude of the signal generator to produce displays of about 2 divisions on the crt.

p. CHECK—the performance of the 464/466 in Ext ÷ 10 by repeating parts c through m.

q. Press in the CHOP button.

r. CHECK—the performance of the 464/466 in Ext ÷ 10 Trigger Source and Chop mode by repeating steps c through m.

s. Move the A TRIGGER SOURCE control to EXT.

t. CHECK—the performance of the 464/466 in Ext Trigger Source and Chop mode by repeating parts c through m.

3. Check Deflection Factor of Trigger View Signal

a. Set instrument controls and make test setup as follows.

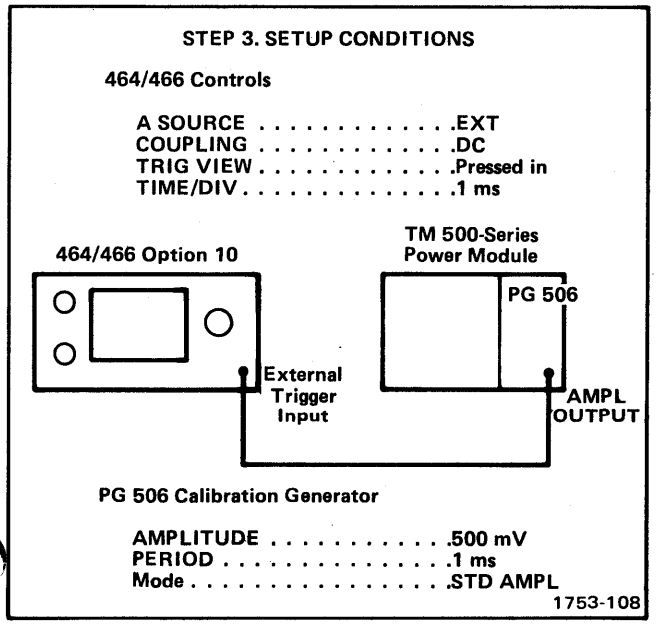

b. CHECK—that the displayed signal is 5 divisions ±5% in amplitude (4.75 to 5.25 divisions).

c. CHECK—that the display can be positioned by rotating the A TRIGGER LEVEL control.

d. Move the A TRIGGER SOURCE control on the 464/466 to EXT ÷ 10.

e. Set the Amplitude control on the PG 506 to 5 V.

f. CHECK—that the displayed signal is 5 divisions ±5% in amplitude (4.75 to 5.25 divisions).

g. CHECK—the performance on the 464/466 in Ext ÷ 10 Trigger Source by repeating part c.

PART II—ADJUSTMENT AND PERFORMANCE CHECK

Adjustment Procedure

Purpose. The purpose of the Option 10 Adjustment Procedure is to provide a calibration sequence for adjustments. All limits and tolerances given in these procedures are calibration guides and should not be interpreted as instrument specifications unless they are also found in the Specification section of this manual and insert.

This procedure provides adjustment steps for adjustments that are unique to Option 10 instruments. Refer to the C. VERTICAL portion of the Calibration procedure in your 464 or 466 Service Manual along with this procedure to perform a complete adjustment of the vertical circuitry of your Option 10 instrument.

Tolerances given are for the instrument under test and do not include test equipment error.

Test Equipment Required. The following equipment is required to perform a complete Adjustment Procedure. For equipment specifications, purpose, and recommended types, see Table Option 10-2. (Numbers correspond to those listed in Table Option 10-2, Test Equipment.)

1. Test Oscilloscope (only if gain requires complete recalibration)

2. Probes, 10X (Two required. One should have scale-factor switching, however an 11-kΩ resistor may be substituted.)

3. Calibration Generator

4. Leveled Sine-wave Generator

5, 6. Coaxial Cables, 50 Ω (Two 18-inch and one 42 inch)

9. Adapter, bnc-to-probe tip

10. Dual Input Coupler

12. Attenuator, 10X (Two required)

13 or 14. Attenuator, 2X or 5X

15. Termination, 50 Ω (Two required)

16. Screwdriver, 3-inch

17. Screwdriver, Low-capacitance

Procedures. Set instrument controls as follows and allow the instrument to warm up for at least 20 minutes at an ambient temperature between +20° C and +30° C before starting the Performance Check and Adjustment Procedure.

If only the Option 10 features are to be checked and adjusted, start here. If a complete procedure is being performed, perform Steps 1 through 6 in the C. VERTICAL portion of the Calibration procedure located in Section 5 of your 464 or 466 Service Manual, then change control settings as instructed in the Note preceding Step 7 in this procedure and start there.

464/466 Control Settings

POWER	ON

Display

REDUCED SCAN (PULL)	OFF (push INTEN in)
INTENSITY	As desired
FOCUS	For optimum definition
SCALE ILLUM	As desired
ASTIG	Best defined trace

Vertical (CH 1 and CH 2)

VERT MODE	CH 1
POSITION	Midrange
VOLTS/DIV	5 mV
VAR VOLTS/DIV	Calibrated detent
AC-GND-DC	DC
INVERT	Normal (button out)
20 MHz BW LIMIT	Full bandwidth (button out)

Trigger (A and B)

COUPLING	AC
LEVEL	As needed for stable display
SLOPE	+
A TRIGGER SOURCE	NORM
B TRIGGER SOURCE	STARTS AFTER DELAY
TRIG MODE	AUTO
A TRIGGER HOLDOFF	NORM

Sweep (A and B)

HORIZ DISPLAY	A
A TIME/DIV	1 ms
B TIME/DIV	1 ms
VAR TIME/DIV	Calibrated detent
DELAY TIME POSITION	Fully counterclockwise
X10 MAG	Off (button out)
POSITION (Horizontal)	Midrange

Storage

NON STORE	On (button in)
STORAGE LEVEL	NORM
SAVE INTEN	Midrange
SAVE	Off (button out)
VIEW TIME	NORM

@

See ADJUSTMENT LOCATIONS 6 *in the diagrams section for adjustments and test points (TP).*

NOTE

For a complete adjustment of the vertical circuitry of your 464 or 466 Option 10 Instrument, perform Steps 1 through 6 in the C. VERTICAL portion of the Section 5 Calibration section of your 464 or 466 Service Manual; set A TIME/DIV to 1 ms, CH1 VOLTS/DIV to 5 mV, then proceed with the following steps.

7. Check/Adjust CH 1 Var Volts/Div Balance And Var Indicator (R3484)

a. Position trace to center horizontal graticule line.

b. CHECK—CH 1 UNCAL lamp is illuminated when VAR control is out of detent.

c. CHECK—trace shift of 0.2 division or less when rotating VAR control from one extreme to the other.

d. ADJUST—CH 1 Var Bal (R3484) for minimum trace shift while rotating CH 1 VAR control from one extreme to the other.

e. Return CH 1 VAR control to detent position.

8. Check/Adjust CH 1 Position Centering (R3135)

a. Set:

CH 1 VOLTS/DIV	.2 V
CH 1 AC-GND-DC	AC
A TIME/DIV	1 ms

b. Connect leveled sine-wave generator output to CH 1 input via 50 Ω coaxial cable and 50 Ω termination. Set the generator for a vertical display of 2.4 divisions at 50 kHz.

c. Set CH 1 VOLTS/DIV switch to 20 mV without moving the VAR control. (If the crt were large enough its vertical display would now be 24 divisions.)

d. CHECK—top of display positions down to center horizontal graticule line or below, bottom of display positions up to center horizontal graticule line or above.

e. ADJUST—CH 1 Position Center (R3151) so display positions same distance above and below graticule center line.

f. Disconnect generator.

9. Check/Adjust CH 2 Var Volts/Div Balance and Var Indicator (R3884)

a. Set VERT MODE switches to display CH 2.

b. CHECK—CH 2 UNCAL lamp is illuminated when VAR control is out of detent.

c. CHECK—trace shift is 0.2 division or less when rotating VAR control from one extreme to the other.

d. ADJUST—CH 2 Var Bal (R3884) for minimum trace shift while rotating CH 2 VAR control from one extreme to the other.

e. Return CH 2 VAR control to detent position.

10. Check/Adjust CH 2 Invert Balance (R3975)

a. Set Ch 2 AC-GND-DC to GND.

b. Position trace to center horizontal graticule line and push INVERT button in.

c. CHECK—trace shift is 0.2 division or less when switching from normal to inverted.

d. ADJUST—invert Bal (R3975) for minimum trace shift.

e. INTERACTION—Invert Bal (R3975) and Var Bal (R3884). Readjust as needed to eliminate interaction.

11. Check/Adjust CH 2 Position Centering (R3735)

a. Set:

INVERT	Normal (button out)
CH 2 VOLTS/DIV	.2 V
CH 2 AC-GND-DC	AC
A TRIGGER LEVEL	Fully clockwise

b. Connect leveled sine-wave generator output to CH 2 input via 50 Ω coaxial cable and 50 Ω bnc termination. Set the generator for a vertical display of 2.4 divisions at 50 kHz.

c. Set CH 2 VOLTS/DIV switch to 20 mV without moving VAR control.

d. CHECK—top of display positions down to center horizontal graticule line or below, bottom of display positions up to center horizontal graticule line or above.

e. ADJUST—CH 2 Position Center (R3735) so display positions same distance above and below graticule line.

f. Disconnect generator.

g. For a complete procedure, perform Step 12 in your 464 or 466 Service Manual, then proceed with the following steps.

13. Check/Adjust Gain (R3482, R3882, R415)

NOTE

It is not always necessary to do a complete readjustment to meet instrument gain specifications. Use following procedure to determine required adjustments.

a. Set:

VERT MODE	CH 2
CH 2 VOLTS/DIV	5 mV
CH 2 AC-GND-DC	DC

b. Connect calibration generator standard-amplitude output to CH 2 input via 50 Ω coaxial cable. Set the generator for 20 mV output.

c. CHECK—display is 4 divisions within 3% (4 divisions ±0.12 division).

d. Change CH 2 VOLTS/DIV and calibration generator settings as shown in Table Option 10-3 and check that deflection accuracy is within 3% for all VOLTS/DIV settings listed.

TABLE OPTION 10-3

Vertical Deflection Accuracy

Volts/Div Setting	Calibration Generator Amplitude	Deflection For 3% Accuracy		Reading In Divisions
		Divisions	Tolerance	
10 mV	50 mV	5	±0.15 div	4.85 to 5.15
20 mV	0.1 V	5	±0.15 div	4.85 to 5.15
50 mV	0.2 V	4	±0.12 div	3.88 to 4.12
.1 V	0.5 V	5	±0.15 div	4.85 to 5.15
.2 V	1 V	5	±0.15 div	4.85 to 5.15
.5 V	2 V	4	±0.12 div	3.88 to 4.12
1 V	5 V	5	±0.15 div	4.85 to 5.15
2 V	10 V	5	±0.15 div	4.85 to 5.15
5 V	20 V	4	±0.12 div	3.88 to 4.12

e. Set VERT MODE switches to display CH 1 and set the CH 1 AC-GND-DC switch to DC.

f. Move the input signal from the CH 2 input connector to the CH 1 input connector.

g. CHECK—display is 4 divisions within 3% (4 divisions ±0.12 division).

h. Change CH 1 VOLTS/DIV and calibration generator settings as shown in Table Option 10-3 and check that deflection accuracy is within 3% for all VOLTS/DIV settings listed.

i. If both channels check within 3%, proceed to Step 14 (see Note following part t of this step) because no further vertical gain calibration is required. If a check at any setting of the VOLTS/DIV switch falls outside the 3% accuracy limits, a complete gain recalibration is required and parts j through t of this step should be completed.

j. Set CH 1 VOLTS/DIV switch to 5 mV and set the output of the calibration generator to 20 mV.

k. Set the test oscilloscope controls as follows:

Vertical Mode	Add
Invert	On (button in)
Volts/Div (both)	.1 V (with 10X probe)
Triggering	Auto (free-running sweep)
A Trigger Source	Ext (no signal applied)

l. Connect two 10X probes from the test oscilloscope to TP3519 and TP3319 on the 464/466 Vertical Preamplifier board. Connect the probe ground leads to chassis ground.

m. CHECK—signal between TP3519 and TP3319 is 400 mV p-p (4 divisions).

n. ADJUST—CH 1 Gain Adjust (R3482) for 400 mV p-p.

NOTE

This is a nominal value for this adjustment. It may be reset to obtain correct CH 1 overall gain.

o. Remove 10X probes from TP3519 and TP3319.

p. CHECK—display is 4 division with 3% (4 divisions ±0.12 division).

q. ADJUST—Output Gain Adjust R415 (on the Vertical Output board) for a 4-division display.

r. Set CH 2 VOLTS/DIV to 5 mV and move the input signal from CH 1 input to CH 2 input. Set the VERT MODE switches to display CH 2.

s. ADJUST—CH 2 Gain Adjust (R3882) for a 4-division display.

t. Repeat parts e through i to recheck the vertical deflection accuracy.

NOTE

If a complete calibration is desired, perform Steps 14, 15, and 16 in your 464 or 466 Service Manual at this point, then perform Step 17 in this procedure.

17. Check/Adjust Low-Frequency Compensation

a. Set:

A TIME/DIV	0.2 ms
VERT MODE	CH 1
AC-GND-DC (both)	DC
VOLTS/DIV (both)	5 mV
A TRIGGER LEVEL	As needed for stable display

b. Connect calibration generator fast-rise + output to CH 1 input via a 50 Ω coaxial cable, 10X attenuator, and 50 Ω bnc termination.

c. Adjust calibration generator to maintain a 5-division display throughout step 17.

d. CHECK—display overshoot or rounding is within 3% (5 divisions ±0.15 division) for each A TIME/DIV and generator setting given in Table Option 10-4.

e. If above checks are within 3%, see Note following part k of this step and proceed to either Step 18 or 20 as desired. If checks are not within 3%, continue with part f of this step.

TABLE OPTION 10-4

Maximum Overshoot or Rounding

Calibration Generator Signal	A Time/Div Setting	Maximum Overshoot or Rounding in Div
1 kHz	.2 ms	4.85 to 5.15
10 kHz	20 μs	4.85 to 5.15
100 kHz	2 μs	4.85 to 5.15

f. Set:

A TIME/DIV	0.2 ms
VERT MODE	CH 1
AC-GND-DC (both)	DC
VOLTS/DIV (both)	5 mV
HORIZ DISPLAY	A
A TRIGGER LEVEL	As needed for stable display
A TRIGGER SLOPE	+

g. Connect calibration generator fast-rise + output to CH 1 input connector via 50 Ω coaxial cable, 10X attenuator, and 50 Ω termination. Set generator frequency to 1 kHz and adjust amplitude for a 6-division display. Adjust A TRIGGER LEVEL for a stable display.

h. ADJUST—use the settings and adjustment in Table Option 10-5 to adjust the CH 1 low-frequency compensation for best flat top within ±3%.

TABLE OPTION 10-5

CH 1 Low-Frequency Compensation

Square-Wave Frequency	A Time/Div	Adjustment
1 kHz	0.2 ms	R3176
10 kHz	20 μs	R3185

i. Move the input signal from CH 1 input connector to CH 2 input connector and set VERT MODE switches to display CH 2.

j. ADJUST—use the settings and adjustments in Table Option 10-6 to adjust the CH 2 low-frequency compensation for best flat top within ±3%.

TABLE OPTION 10-6

CH 2 Low-Frequency Compensation

Square-Wave Frequency	A Time/Div	Adjustment
1 kHz	0.2 ms	R3580
10 kHz	20 μs	R3582

k. Disconnect calibration generator fast-rise + output from CH 2 input connector.

NOTE

To perform a complete calibration of your Option 10 instrument, proceed to Steps 18 and 19 in the 464 or 466 Service Manual. In Step 18, part a, press the 20 MHz BW LIMIT button in for Option 10 instruments. When Steps 18 and 19 are completed, return to this procedure and perform Step 20.

20. Check/Adjust CH 2 and Output High Frequency Compensation

a. Set:

VOLTS/DIV (both)	5 mV
A TRIGGER SLOPE	+
20 MHz BW LIMIT	Full bandwidth (button out)
A TRIGGER LEVEL	As needed for stable display

b. Connect calibration generator fast-rise + (positive-going) output to CH 2 input connector via a 50 Ω coaxial cable, 10X bnc attenuator, and 50 Ω termination.

NOTE

Adjustments in steps 20 and 22 interact. Perform all of the checks, but not the adjustments, in these steps before making any adjustments (unless calibration is being performed after repair or replacement of vertical components).

@

If all checks are within the given limits, proceed to step 29.

If any of the checks are not within the given limits perform checks and adjustments in steps 20 and 22, using low-capacitance screwdriver.

If still not within the given limits—perform steps 7 through 22.

c. Adjust calibration generator output for a 5-division 100 kHz display.

d. Set A TIME/DIV to 0.2 μs.

e. CHECK—that aberrations on the positive-going step are within 3% (±0.15 division). See Figure Option 10-6 for typical display.

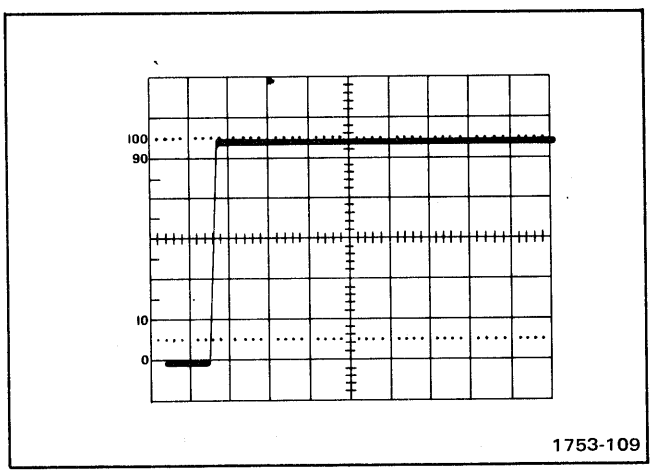

Figure Option 10-6. Typical display of transient response when high-frequency conpensation is correctly adjusted.

f. ADJUST—R3685, C3690, R3634, and C3643 for best flat-top waveform with fastest rise time.

g. Connect test setup to fast-rise – (negative-going) output of calibration generator.

h. Set A TRIGGER SLOPE to –.

i. CHECK—that aberrations on the negative-going step are within 2% of aberrations observed on the positive-going step in part e.

NOTE

For complete Calibration, perform Step 21 in your 464 or 466 Service Manual, then proceed to Step 22 in this procedure.

22. Check/Adjust CH 1 High-Frequency Compensation

a. Move cable to fast-rise + (positive-going) output of calibration generator.

b. Set the A TRIGGER SLOPE to +.

c. Set VERT MODE switches to display CH 1.

d. Move test signal from CH 2 input to CH 1 input connector.

e. CHECK—that aberrations on the positive-going step are within 3% (±0.15 division). See Figure Option 10-6 for typical display.

f. ADJUST—R3190, C3192, R3335, and C3342 for best flat-top display.

INTERACTION—It may be necessary to compromise Vertical Output adjustment and CH 2 adjustment for best high-frequency match between CH 1 and CH 2.

g. Connect test setup to fast-rise – output of calibration generator.

h. Set A TRIGGER SLOPE to –.

i. CHECK—that aberrations on negative-going step are within 2% of aberrations observed on the positive-going step in part e.

j. Disconnect test setup if you are performing only the Option 10 steps. If you are performing a complete Calibration, leave generator connected and proceed to Steps 23 through 28 in your 464 or 466 Service Manual, then return to this procedure and perform Step 29.

29. Check/Adjust Common-Mode Rejection Ratio (R3882)

a. Set:

VOLTS/DIV (both)	20 mV
AC-GND-DC (both)	DC
A TRIGGER	
SOURCE	NORM
SLOPE	+
VERT MODE	CH 1
CH 2 INVERT	Inverted (button in)

b. Connect leveled sine-wave generator output to CH 1 and CH 2 input connectors via 50 Ω coaxial cable, 10X attenuator, 50 Ω termination, and dual-input coupler.

c. Set generator frequency to 20 MHz and adjust output for a 6-division display.

d. Set VERT MODE switches for ADD only (press CH 1 VERT MODE to remove CH 1 trace from crt display).

e. CHECK—display is 0.6 division or less (indicates CMRR of at least 10:1 at 20 MHz).

f. Proceed to part m if the check in part e meets the requirements. If the CMRR is less than 10:1, continue with this procedure.

g. Set VERT MODE switches to display CH 1.

h. Set generator frequency to 50 kHz and adjust output for a 6-division display.

i. Set VERT MODE switches to display ADD only.

j. ADJUST—CH 2 Gain Adjust (R3882) for minimum display (best CMRR).

k. Set generator frequency to 20 MHz.

l. CHECK—display is 0.6 division or less (indicates CMRR of at least 10:1 at 20 MHz).

m. Press CH 2 INVERT push button to release it; disconnect test setup.

30. Check Bandwidth Limit Operation

a. Set:

20 MHz BW LIMIT	Limited bandwidth (button in)
CH 1 AC-GND-DC	DC
VERT MODE	CH 1

b. Connect leveled sine-wave generator reference signal output to CH 1 input connector via 50 Ω coaxial cable and 50 Ω termination.

c. Adjust generator output amplitude for a 6-division display.

d. Increase generator frequency until display is 4.2 divisions.

e. CHECK—generator output frequency is 16 to 24 MHz.

f. Disconnect test setup.

NOTE

Steps 31, 32, and 33 require that D. TRIGGER Steps 1 through 21 in the 464 or 466 Service Manual have been performed or that the Trigger circuitry is performing within specification. When Steps 31, 32, and 33 in this procedure are performed for Option 10 instruments, the D. TRIGGER Steps 22 and 23 should be ignored (skip from Step 21 to Step 24 when performing the D. TRIGGER procedure).

31. Check/Adjust Trigger View Centering and Gain (R675, R679)

a. Set:

A TRIGGER	
SOURCE	EXT
COUPLING	AC
LEVEL	0
SLOPE	+
A TIME/DIV	0.2 ms
VERT MODE	TRIG VIEW

b. Connect the calibration generator standard-amplitude signal to the A External Trigger input connector via a 50 Ω coaxial cable. Set the generator for 0.5 V output.

c. CHECK—display amplitude is 5 divisions ±5% (5 divisions ±0.25 division) and that display will trigger

symmetrically within one division of the center horizontal graticule line when the A TRIGGER SLOPE is switched between + and –.

d. ADJUST–Trig View Centering (R675) to center the display about the center horizontal graticule line.

e. ADJUST–Trig View Gain (R679) for a 5-division display.

f. INTERACTION–Between Trig View Centering and Trig View Gain adjustments. Repeat both for no visible interaction.

g. Disconnect the calibration generator standard-amplitude signal from the A External Trigger input.

32. Check/Adjust Trigger View Low-Frequency Compensation (C606, C603)

a. Connect the calibration generator high-amplitude output to the A External Trigger input connector via a 50 Ω coaxial cable. (Check generator output to see if termination is required.)

b. Set calibration generator for a 5-division display at 1 kHz.

c. CHECK–square-wave has less than 10% overshoot or rounding (±0.5 division).

d. ADJUST–C606 for best flat top on square-wave display.

e. Change A TRIGGER SOURCE to EXT ÷ 10 and adjust calibration generator output amplitude for a 5-division display.

f. CHECK–square-wave has less than 10% overshoot or rounding (±0.5 division).

g. ADJUST–C603 for best flat top on square-wave display.

h. Remove bnc cable from high-amplitude output on the calibration generator.

33. Check/Adjust Trigger View High-Frequency Compensation (C673, R673, and C676)

a. Set:

A TIME/DIV	0.2 μs
A TRIGGER SOURCE	EXT

b. Connect fast rise + output from calibration generator to the A External Trigger input connector via a 50 Ω coaxial cable and a 50 Ω termination. Set the calibration generator to 100 kHz and adjust output amplitude for a 5-division display.

c. CHECK–square-wave front corner has less than ±10% aberration (±0.5 division).

d. ADJUST–C673, R673, and C676 for best front corner and square-wave rise time of 5 ns or less.

e. Disconnect calibration generator.

REPLACEABLE ELECTRICAL PARTS

PARTS ORDERING INFORMATION

Replacement parts are available from or through your local Tektronix, Inc. Field Office or representative.

Changes to Tektronix instruments are sometimes made to accommodate improved components as they become available, and to give you the benefit of the latest circuit improvements developed in our engineering department. It is therefore important, when ordering parts, to include the following information in your order: Part number, instrument type or number, serial number, and modification number if applicable.

If a part you have ordered has been replaced with a new or improved part, your local Tektronix, Inc. Field Office or representative will contact you concerning any change in part number.

Change information, if any, is located at the rear of this manual.

SPECIAL NOTES AND SYMBOLS

X000	Part first added at this serial number
00X	Part removed after this serial number

ITEM NAME

In the Parts List, an Item Name is separated from the description by a colon (:). Because of space limitations, an Item Name may sometimes appear as incomplete. For further Item Name identification, the U.S. Federal Cataloging Handbook H6-1 can be utilized where possible.

ABBREVIATIONS

ACTR	ACTUATOR	PLSTC	PLASTIC
ASSY	ASSEMBLY	QTZ	QUARTZ
CAP	CAPACITOR	RECP	RECEPTACLE
CER	CERAMIC	RES	RESISTOR
CKT	CIRCUIT	RF	RADIO FREQUENCY
COMP	COMPOSITION	SEL	SELECTED
CONN	CONNECTOR	SEMICOND	SEMICONDUCTOR
ELCTLT	ELECTROLYTIC	SENS	SENSITIVE
ELEC	ELECTRICAL	VAR	VARIABLE
INCAND	INCANDESCENT	WW	WIREWOUND
LED	LIGHT EMITTING DIODE	XFMR	TRANSFORMER
NONWIR	NON WIREWOUND	XTAL	CRYSTAL

CROSS INDEX—MFR. CODE NUMBER TO MANUFACTURER

Mfr. Code	Manufacturer	Address	City, State, Zip
01121	ALLEN-BRADLEY COMPANY	1201 2ND STREET SOUTH	MILWAUKEE, WI 53204
01295	TEXAS INSTRUMENTS, INC., SEMICONDUCTOR GROUP	P O BOX 5012, 13500 N CENTRAL EXPRESSWAY	DALLAS, TX 75222
04222	AVX CERAMICS, DIVISION OF AVX CORP.	P O BOX 867, 19TH AVE. SOUTH	MYRTLE BEACH, SC 29577
04713	MOTOROLA, INC., SEMICONDUCTOR PROD. DIV.	5005 E MCDOWELL RD,PO BOX 20923	PHOENIX, AZ 85036
14298	AMERICAN COMPONENTS, INC., AN INSILCO COMPANY	8TH AVE. AT HARRY STREET	CONSHOHOCKEN, PA 19428
15454	RODAN INDUSTRIES, INC.	2905 BLUE STAR ST.	ANAHEIM, CA 92806
22526	BERG ELECTRONICS, INC.	YOUK EXPRESSWAY	NEW CUMBERLAND, PA 17070
28480	HEWLETT-PACKARD CO., CORPORATE HQ.	1501 PAGE MILL RD.	PALO ALTO, CA 94304
32997	BOURNS, INC., TRIMPOT PRODUCTS DIV.	1200 COLUMBIA AVE.	RIVERSIDE, CA 92507
52763	STETTNER-TRUSH, INC.	67 ALBANY STREET	CAZENOVIA, NY 13035
53944	ELT INC., GLOW LITE DIVISION	BOX 698	PAULS VALLEY, OK 73075
55210	GETTIG ENG. AND MFG. COMPANY	PO BOX 85, OFF ROUTE 45	SPRING MILLS, PA 16875
56289	SPRAGUE ELECTRIC CO.		NORTH ADAMS, MA 01247
71590	CENTRALAB ELECTRONICS, DIV. OF GLOBE-UNION, INC.	P O BOX 858	FORT DODGE, IA 50501
72982	ERIE TECHNOLOGICAL PRODUCTS, INC.	644 W. 12TH ST.	ERIE, PA 16512
73138	BECKMAN INSTRUMENTS, INC., HELIPOT DIV.	2500 HARBOR BLVD.	FULLERTON, CA 92634
75042	TRW ELECTRONIC COMPONENTS, IRC FIXED RESISTORS, PHILADELPHIA DIVISION	401 N. BROAD ST.	PHILADELPHIA, PA 19108
80009	TEKTRONIX, INC.	P O BOX 500	BEAVERTON, OR 97077
80031	ELECTRA-MIDLAND CORP., MEPCO DIV.	22 COLUMBIA ROAD	MORRISTOWN, NJ 07960
82647	TEXAS INSTRUMENTS, INC., CONTROL PRODUCTS DIV.	34 FOREST ST.	ATTLEBORO, MA 02703
90201	MALLORY CAPACITOR CO., DIV. OF P. R. MALLORY AND CO., INC.	3029 E. WASHINGTON STREET P. O. BOX 372	INDIANAPOLIS, IN 46206
91637	DALE ELECTRONICS, INC.	P. O. BOX 609	COLUMBUS, NE 68601

Ckt No.	Tektronix Part No.	Serial/Model No. Eff	Dscont	Name & Description	Mfr Code	Mfr Part Number
				ELECTRICAL PARTS LIST DIFFERENCES BETWEEN INSTRUMENT EQUIPPED WITH OPTION 10 AND STANDARD INSTRUMENT		
(CHANGE TO:)						
A2	670-6301-00			CKT BOARD ASSY:VERTICAL PREAMP	80009	670-6301-00
A3	670-6252-00			CKT BOARD ASSY:VERTICAL MODE	80009	670-6252-00
A3	----- -----			(464 ONLY)		
A3	670-6254-00			CKT BOARD ASSY:VERTICAL MODE	80009	670-6254-00
A3	----- -----			(466 ONLY)		
A4	670-2811-02			CKT BOARD ASSY:VERTICAL OUTPUT	80009	670-2811-02
A5	670-6293-00			CKT BOARD ASSY:TRIGGER	80009	670-6293-00
A5	670-6293-01			CKT BOARD ASSY:TRIGGER	80009	670-6293-01
A5	----- -----			(DM44 ONLY)		
A6	670-2805-13			CKT BOARD ASSY:INTERFACE	80009	670-280-13
A6	----- -----			(466 ONLY)		
A6	670-2804-14			CKT BOARD ASSY:INTERFACE	80009	670-2804-14
	----- -----			(464 ONLY)		
				A2 VERTICAL PREAMP BOARD CHANGES		
(CHANGE TO:)						
C3026	281-0815-00			CAP.,FXD,CER DI:0.027UF,20%,50V	72982	8005D9AABW5R273M
C3048	281-0812-00			CAP.,FXD,CER DI:1000PF,10%,100V	72982	8035D9AADX7R102K
C3071	281-0813-00			CAP.,FXD CER DI:0.047UF,20%,100V	04222	GC705-E-473M
C3072	281-0786-00			CAP.,FXD,CER DI:150PF,10%,100V	72982	8035D2AADX5P151K
C3075	281-0773-00			CAP.,FXD,CER DI:0.01UF,10%,100V	72982	8005H9AADW5R103K
C3091	281-0773-00			CAP.,FXD,CER DI:0.01UF,10%,100V	72982	8005H9AADW5R103K
C3095	281-0815-00			CAP.,FXD,CER DI:0.027UF,20%,50V	72982	8005D9AABW5R273M
C3112	281-0798-00			CAP.,FXD,CER DI:51PF,1%,100V	04222	MC101A510G
C3119	290-0517-00			CAP.,FXD,ELCTLT:6.8UF,20%,35V	56289	196D685X0035KA1
C3135	290-0517-00			CAP.,FXD,ELCTLT:6.8UF,20%,35V	56289	196D685X0035KA1
C3142	281-0788-00			CAP.,FXD,CER DI:470PF,10%,100V	72982	8005H9AADW5R471K
C3144	281-0819-00			CAP.,FXD,CER DI:33PF,5%,50V	72982	8035BCOG330J
C3152	281-0809-00			CAP.,FXD,CER DI:200PF,5%,100V	72982	8013T2ADDC1G201J
C3173	281-0788-00			CAP.,FXD,CER DI:470PF,10%,100V	72982	8005H9AADW5R471K
C3192	281-0205-00			CAP.,VAR,PLSTC:4-65PF,100V	80031	2810C5R565QJ02F0
C3287	281-0815-00			CAP.,FXD,CER DI:0.027UF,20%,50V	72982	8005D9AABW5R273M
C3306	281-0579-00			CAP.,FXD,CER DI:21PF,5%,500V	72982	301-050C0G0210J
C3334	281-0773-00			CAP.,FXD,CER DI:0.01UF,10%,100V	72982	8005H9AADW5R103K
C3342	281-0204-00			CAP.,VAR,PLSTC:2-22PF,100V	80031	287C00222MJ02
C3352	281-0809-00			CAP.,FXD,CER DI:200PF,5%,100V	72982	8013T2ADDC1G201J
C3384	281-0815-00			CAP.,FXD,CER DI:0.027UF,20%,50V	72982	8005D9AABW5R273M
C3385	281-0815-00			CAP.,FXD,CER DI:0.027UF,20%,50V	72982	8005D9AABW5R273M
C3396	290-0517-00			CAP.,FXD,ELCTLT:6.8UF,20%,35V	56289	196D685X0035KA1
C3398	281-0547-00			CAP.,FXD,CER DI:2.7PF,10%,500V	72982	301-000C0J0279C
C3405	281-0589-00			CAP.,FXD,CER DI:170PF,5%,500V	72982	301000Z5D0171J
C3422	281-0788-00			CAP.,FXD,CER DI:470PF,10%,100V	72982	8005H9AADW5R471K
C3423	281-0809-00			CAP.,FXD,CER DI:200PF,5%,100V	72982	8013T2ADDC1G201J
C3462	290-0517-00			CAP.,FXD,ELCTLT:6.8UF,20%,35V	56289	196D685X0035KA1
C3464	290-0517-00			CAP.,FXD,ELCTLT:6.8UF,20%,35V	56289	196D685X0035KA1
C3466	290-0517-00			CAP.,FXD,ELCTLT:6.8UF,20%,35V	56289	196D685X0035KA1
C3502	281-0773-00			CAP.,FXD,CER DI:0.01UF,10%,100V	72982	8005H9AADW5R103K
C3517	281-0773-00			CAP.,FXD,CER DI:0.01UF,10%,100V	72982	8005H9AADW5R103K
C3521	281-0788-00			CAP.,FXD,CER DI:470PF,10%,100V	72982	8005H9AADW5R471K
C3525	290-0527-00			CAP.,FXD,ELCTLT:15UF,20%,20V	90201	TDC156M020FL

Ckt No.	Tektronix Part No.	Serial/Model No. Eff	Dscont	Name & Description	Mfr Code	Mfr Part Number
C3586	281-0788-00			CAP.,FXD,CER DI:470PF,10%,100V	72982	8005H9AADW5R471K
C3587	281-0786-00			CAP.,FXD,CER DI:150PF,10%,100V	72982	8035D2AADX5P151K
C3592	281-0773-00			CAP.,FXD,CER DI:0.01UF,10%,100V	72982	8005H9AADW5R103K
C3597	281-0815-00			CAP.,FXD,CER DI:0.027UF,20%,50V	72982	8005D9AABW5R273M
C3611	281-0814-00			CAP.,FXD,CER DI:100PF,10%,100V	72982	8035D2AADC0G101K
C3615	281-0814-00			CAP.,FXD,CER DI:100PF,10%,100V	72982	8035D2AADC0G101K
C3623	281-0814-00			CAP.,FXD,CER DI:100PF,10%,100V	72982	8035D2AADC0G101K
C3643	281-0204-00			CAP.,VAR,PLSTC:2-22PF,100V	80031	287C00222MJ02
C3647	281-0809-00			CAP.,FXD,CER DI:200PF,5%,100V	72982	8013T2ADDC1G201J
C3682	281-0773-00			CAP.,FXD,CER DI:0.01UF,10%,100V	72982	8005H9AADW5R103K
C3683	281-0813-00			CAP.,FXD CER DI:0.047UF,20%,100V	04222	GC705-E-473M
C3690	281-0205-00			CAP.,VAR,PLSTC:4-65PF,100V	80031	2810C5R565QJ02F0
C3714	281-0814-00			CAP.,FXD,CER DI:100PF,10%,100V	72982	8035D2AADC0G101K
C3723	281-0814-00			CAP.,FXD,CER DI:100PF,10%,100V	72982	8035D2AADC0G101K
C3726	281-0814-00			CAP.,FXD,CER DI:100PF,10%,100V	72982	8035D2AADC0G101K
C3734	290-0527-00			CAP.,FXD,ELCTLT:15UF,20%,20V	90201	TDC156M020FL
C3787	281-0815-00			CAP.,FXD,CER DI:0.027UF,20%,50V	72982	8005D9AABW5R273M
C3804	281-0630-00			CAP.,FXD,CER DI:390PF,5%,500V	72982	630000Y5D391J
C3813	281-0809-00			CAP.,FXD,CER DI:200PF,5%,100V	72982	8013T2ADDC1G201J
C3822	281-0763-00			CAP.,FXD,CER DI:47PF,10%,100V	72982	8035D9AADC1G470K
C3827	281-0798-00			CAP.,FXD,CER DI:51PF,1%,100V	04222	MC101A510G
C3832	290-0517-00			CAP.,FXD,ELCTLT:6.8UF,20%,35V	56289	196D685X0035KA1
C3846	281-0812-00			CAP.,FXD,CER DI:1000PF,10%,100V	72982	8035D9AADX7R102K
C3848	281-0759-00			CAP.,FXD,CER DI:22PF,10%,100V	72982	8035D9AADC1G220K
C3854	281-0809-00			CAP.,FXD,CER DI:200PF,5%,100V	72982	8013T2ADDC1G201J
C3885	281-0815-00			CAP.,FXD,CER DI:0.027UF,20%,50V	72982	8005D9AABW5R273M
C3886	281-0815-00			CAP.,FXD,CER DI:0.027UF,20%,50V	72982	8005D9AABW5R273M
C3894	290-0517-00			CAP.,FXD,ELCTLT:6.8UF,20%,35V	56289	196D685X0035KA1
C3896	281-0547-00			CAP.,FXD,CER DI:2.7PF,10%,500V	72982	301-000C0J0279C
C3911	281-0773-00			CAP.,FXD,CER DI:0.01UF,10%,100V	72982	8005H9AADW5R103K
C3912	290-0517-00			CAP.,FXD,ELCTLT:6.8UF,20%,35V	56289	196D685X0035KA1
C3943	281-0788-00			CAP.,FXD,CER DI:470PF,10%,100V	72982	8005H9AADW5R471K
CR3013	152-0141-02			SEMICOND DEVICE:SILICON,30V,150MA	80009	152-0141-02
CR3014	152-0141-02			SEMICOND DEVICE:SILICON,30V,150MA	80009	152-0141-02
CR3015	152-0141-02			SEMICOND DEVICE:SILICON,30V,150MA	80009	152-0141-02
CR3023	152-0141-02			SEMICOND DEVICE:SILICON,30V,150MA	80009	152-0141-02
CR3024	152-0141-02			SEMICOND DEVICE:SILICON,30V,150MA	80009	152-0141-02
CR3034	152-0141-02			SEMICOND DEVICE:SILICON,30V,150MA	80009	152-0141-02
CR3193	152-0153-00			SEMICOND DEVICE:SILICON,15V,50MA	80009	152-0153-00
CR3263	152-0612-00			SEMICOND DEVICE:V VAR CAP.,4V,17.5PF	80009	152-0612-00
CR3264	152-0612-00			SEMICOND DEVICE:V VAR CAP.,4V,17.5PF	80009	152-0612-00
CR3298	152-0323-00			SEMICOND DEVICE:SILICON,35V,0.1A	80009	152-0323-00
CR3312	152-0141-02			SEMICOND DEVICE:SILICON,30V,150MA	80009	152-0141-02
CR3327	152-0141-02			SEMICOND DEVICE:SILICON,30V,150MA	80009	152-0141-02
CR3432	152-0322-00			SEMICOND DEVICE:SILICON,15V,HOT CARRIER	28480	5082-2672
CR3434	152-0322-00			SEMICOND DEVICE:SILICON,15V,HOT CARRIER	28480	5082-2672
CR3436	152-0322-00			SEMICOND DEVICE:SILICON,15V,HOT CARRIER	28480	5082-2672
CR3438	152-0322-00			SEMICOND DEVICE:SILICON,15V,HOT CARRIER	28480	5082-2672
CR3441	152-0322-00			SEMICOND DEVICE:SILICON,15V,HOT CARRIER	28480	5082-2672
CR3443	152-0322-00			SEMICOND DEVICE:SILICON,15V,HOT CARRIER	28480	5082-2672
CR3445	152-0322-00			SEMICOND DEVICE:SILICON,15V,HOT CARRIER	28480	5082-2672
CR3447	152-0322-00			SEMICOND DEVICE:SILICON,15V,HOT CARRIER	28480	5082-2672
CR3529	152-0141-02			SEMICOND DEVICE:SILICON,30V,150MA	80009	152-0141-02
CR3541	152-0322-00			SEMICOND DEVICE:SILICON,15V,HOT CARRIER	28480	5082-2672
CR3543	152-0322-00			SEMICOND DEVICE:SILICON,15V,HOT CARRIER	28480	5082-2672
CR3545	152-0322-00			SEMICOND DEVICE:SILICON,15V,HOT CARRIER	28480	5082-2672
CR3547	152-0322-00			SEMICOND DEVICE:SILICON,15V,HOT CARRIER	28480	5082-2672

Ckt No.	Tektronix Part No.	Serial/Model No. Eff	Dscont	Name & Description	Mfr Code	Mfr Part Number
CR3693	152-0153-00			SEMICOND DEVICE:SILICON,15V,50MA	80009	152-0153-00
CR3727	152-0141-02			SEMICOND DEVICE:SILICON,30V,150MA	80009	152-0141-02
CR3763	152-0612-00			SEMICOND DEVICE:V VAR CAP.,4V,17.5PF	80009	152-0612-00
CR3764	152-0612-00			SEMICOND DEVICE:V VAR CAP.,4V,17.5PF	80009	152-0612-00
CR3796	152-0323-00			SEMICOND DEVICE:SILICON,35V,0.1A	80009	152-0323-00
CR3818	152-0141-02			SEMICOND DEVICE:SILICON,30V,150MA	80009	152-0141-02
CR3918	152-0141-02			SEMICOND DEVICE:SILICON,30V,150MA	80009	152-0141-02
CR3936	152-0141-02			SEMICOND DEVICE:SILICON,30V,150MA	80009	152-0141-02
L3245	108-0433-00			COIL,RF:0.09UH	80009	108-0433-00
L3412	108-0182-00			COIL,RF:0.3UH	80009	108-0182-00
L3512	108-0182-00			COIL,RF:0.3UH	80009	108-0182-00
L3642	108-0433-00			COIL,RF:0.09UH	80009	108-0433-00
Q3004	151-0190-00			TRANSISTOR:SILICON,NPN	80009	151-0190-00
Q3028	151-0221-00			TRANSISTOR:SILICON,PNP	80009	151-0221-00
Q3038	151-0271-00			TRANSISTOR:SILICON,PNP	80009	151-0271-00
Q3045	151-0271-00			TRANSISTOR:SILICON,PNP	80009	151-0271-00
Q3062	151-0190-00			TRANSISTOR:SILICON,NPN	80009	151-0190-00
Q3118	151-0188-00			TRANSISTOR:SILICON,PNP	80009	151-0188-00
Q3125	151-0221-00			TRANSISTOR:SILICON,PNP	80009	151-0221-00
Q3145	151-0271-00			TRANSISTOR:SILICON,PNP	80009	151-0271-00
Q3150	151-0221-00			TRANSISTOR:SILICON,PNP	80009	151-0221-00
Q3155	151-0434-00			TRANSISTOR:SILICON,PNP	80009	151-0434-00
Q3175	151-0198-00			TRANSISTOR:SILICON,NPN,SEL FROM MPS918	80009	151-0198-00
Q3215	151-0198-00			TRANSISTOR:SILICON,NPN,SEL FROM MPS918	80009	151-0198-00
Q3225	151-0221-00			TRANSISTOR:SILICON,PNP	80009	151-0221-00
Q3235	151-0221-00			TRANSISTOR:SILICON,PNP	80009	151-0221-00
Q3250	151-0221-00			TRANSISTOR:SILICON,PNP	80009	151-0221-00
Q3297	151-1090-00			TRANSISTOR:SILICON,DUAL,N CHANNEL,FET	80009	151-1090-00
Q3344	151-0221-00			TRANSISTOR:SILICON,PNP	80009	151-0221-00
Q3346	151-0221-00			TRANSISTOR:SILICON,PNP	80009	151-0221-00
Q3355	151-0434-00			TRANSISTOR:SILICON,PNP	80009	151-0434-00
Q3375	151-0198-00			TRANSISTOR:SILICON,NPN,SEL FROM MPS918	80009	151-0198-00
Q3426	151-0472-00			TRANSISTOR:SILICON,NPN	80009	151-0472-00
Q3428	151-0472-00			TRANSISTOR:SILICON,NPN	80009	151-0472-00
Q3555	151-0190-00			TRANSISTOR:SILICON,NPN	80009	151-0190-00
Q3617	151-0188-00			TRANSISTOR:SILICON,PNP	80009	151-0188-00
Q3619	151-0188-00			TRANSISTOR:SILICON,PNP	80009	151-0188-00
Q3636	151-0367-00			TRANSISTOR:SILICON,NPN,SEL FROM 3571TP	80009	151-0367-00
Q3644	151-0221-00			TRANSISTOR:SILICON,PNP	80009	151-0221-00
Q3646	151-0221-00			TRANSISTOR:SILICON,PNP	80009	151-0221-00
Q3655	151-0434-00			TRANSISTOR:SILICON,PNP	80009	151-0434-00
Q3675	151-0198-00			TRANSISTOR:SILICON,NPN,SEL FROM MPS918	80009	151-0198-00
Q3698	151-1090-00			TRANSISTOR:SILICON,DUAL,N CHANNEL,FET	80009	151-1090-00
Q3719	151-0188-00			TRANSISTOR:SILICON,PNP	80009	151-0188-00
Q3746	151-0221-00			TRANSISTOR:SILICON,PNP	80009	151-0221-00
Q3812	151-0188-00			TRANSISTOR:SILICON,PNP	80009	151-0188-00
Q3833	151-0221-00			TRANSISTOR:SILICON,PNP	80009	151-0221-00
Q3845	151-0271-00			TRANSISTOR:SILICON,PNP	80009	151-0271-00
Q3855	151-0434-00			TRANSISTOR:SILICON,PNP	80009	151-0434-00
Q3875	151-0198-00			TRANSISTOR:SILICON,NPN,SEL FROM MPS918	80009	151-0198-00
Q3938	151-0271-00			TRANSISTOR:SILICON,PNP	80009	151-0271-00
Q3948	151-0271-00			TRANSISTOR:SILICON,PNP	80009	151-0271-00
Q3954	151-0221-00			TRANSISTOR:SILICON,PNP	80009	151-0221-00
R3016	321-0064-00			RES.,FXD,FILM:45.3 OHM,1%,0.125W	91637	MFF1816G45R30F
R3032	321-0201-00			RES.,FXD,FILM:1.21K OHM,1%,0.125W	91637	MFF1816G12100F
R3033	315-0331-00			RES.,FXD,CMPSN:330 OHM,5%,0.25W	01121	CB3315
R3035	315-0470-00			RES.,FXD,CMPSN:47 OHM,5%,0.25W	01121	CB4705

Ckt No.	Tektronix Part No.	Serial/Model No. Eff	Dscont	Name & Description	Mfr Code	Mfr Part Number
R3042	315-0431-00			RES.,FXD,CMPSN:430 OHM,5%,0.25W	01121	CB4315
R3052	315-0101-00			RES.,FXD,CMPSN:100 OHM,5%,0.25W	01121	CB1015
R3055	311-1311-00			RES.,VAR,NONWIR:1K OHM,20%,1W	01121	73M4G048L102M
R3064	321-0190-00			RES.,FXD,FILM:931 OHM,1%,0.125W	91637	MFF1816G931R0F
R3072	315-0112-00			RES.,FXD,CMPSN:1.1K OHM,5%,0.25W	01121	CB1125
R3081	321-0229-00			RES.,FXD,FILM:2.37K OHM,1%,0.125W	91637	MFF1816G23700F
R3082	321-0229-00			RES.,FXD,FILM:2.37K OHM,1%,0.125W	91637	MFF1816G23700F
R3087	315-0470-00			RES.,FXD,CMPSN:47 OHM,5%,0.25W	01121	CB4705
R3095	321-0030-00			RES.,FXD,FILM:20 OHM,1%,0.125W	91637	MFF1816G20R00F
R3106	321-0064-00			RES.,FXD,FILM:45.3 OHM,1%,0.125W	91637	MFF1816G45R30F
R3107	321-0068-00			RES.,FXD,FILM:49.9 OHM,1%,0.125W	91637	MFF1816G49R90F
R3108	321-0126-00			RES.,FXD,FILM:200 OHM,1%,0.125W	91637	MFF1816G200R0F
R3116	315-0751-00			RES.,FXD,CMPSN:750 OHM,5%,0.25W	01121	CB7515
R3117	315-0331-00			RES.,FXD,CMPSN:330 OHM,5%,0.25W	01121	CB3315
R3126	311-1564-00			RES.,VAR,NONWIR:500 OHM,20%,0.50W	73138	91A R500
R3135	311-1558-00			RES.,VAR,NONWIR:20K OHM,20%,0.50W	73138	91-80-0
R3136	315-0331-00			RES.,FXD,CMPSN:330 OHM,5%,0.25W	01121	CB3315
R3143	321-0192-00			RES.,FXD,FILM:976 OHM,1%,0.125W	91637	MFF1816G976R0F
R3144	321-0126-00			RES.,FXD,FILM:200 OHM,1%,0.125W	91637	MFF1816G200R0F
R3147	315-0390-00			RES.,FXD,CMPSN:39 OHM,5%,0.25W	01121	CB3905
R3148	315-0222-00			RES.,FXD,CMPSN:2.2K OHM,5%,0.25W	01121	CB2225
R3159	321-0126-00			RES.,FXD,FILM:200 OHM,1%,0.125W	91637	MFF1816G200R0F
R3168	315-0183-00			RES.,FXD,CMPSN:18K OHM,5%,0.25W	01121	CB1835
R3176	311-1560-00			RES.,VAR,NONWIR:5K OHM,5%,0.50W	73138	91A R5K
R3185	311-1560-00			RES.,VAR,NONWIR:5K OHM,5%,0.50W	73138	91A R5K
R3186	315-0470-00			RES.,FXD,CMPSN:47 OHM,5%,0.25W	01121	CB4705
R3188	315-0470-00			RES.,FXD,CMPSN:47 OHM,5%,0.25W	01121	CB4705
R3190	311-1567-00			RES.,VAR,NONWIR:TRMR,100 OHM,0.50W	73138	91-89-0
R3202	311-1564-00			RES.,VAR,NONWIR:500 OHM,20%,0.50W	73138	91A R500
R3205	321-0206-00			RES.,FXD,FILM:1.37K OHM,1%,0.125W	91637	MFF1816G13700F
R3206	321-0177-00			RES.,FXD,FILM:681 OHM,1%,0.125W	91637	MFF1816G681R0F
R3207	315-0271-00			RES.,FXD,CMPSN:270 OHM,5%,0.25W	01121	CB2715
R3208	323-0156-00			RES.,FXD,FILM:412 OHM,1%,0.50W	75042	CECT0-4120F
R3216	315-0511-00			RES.,FXD,CMPSN:510 OHM,5%,0.25W	01121	CB5115
R3232	315-0430-00			RES.,FXD,CMPSN:43 OHM,5%,0.25W	01121	CB4305
R3233	315-0512-00			RES.,FXD,CMPSN:5.1K OHM,5%,0.25W	01121	CB5125
R3234	321-0196-00			RES.,FXD,FILM:1.07K OHM,1%,0.125W	91637	MFF1816G10700F
R3242	321-0192-00			RES.,FXD,FILM:976 OHM,1%,0.125W	91637	MFF1816G976R0F
R3243	315-0392-00			RES.,FXD,CMPSN:3.9K OHM,5%,0.25W	01121	CB3925
R3244	315-0392-00			RES.,FXD,CMPSN:3.9K OHM,5%,0.25W	01121	CB3925
R3246	315-0390-00			RES.,FXD,CMPSN:39 OHM,5%,0.25W	01121	CB3905
R3247	315-0222-00			RES.,FXD,CMPSN:2.2K OHM,5%,0.25W	01121	CB2225
R3252	321-0170-00			RES.,FXD,FILM:576 OHM,1%,0.125W	91637	MFF1816G576R0F
R3253	321-0170-00			RES.,FXD,FILM:576 OHM,1%,0.125W	91637	MFF1816G576R0F
R3254	321-0089-00			RES.,FXD,FILM:82.5 OHM,1%,0.125W	91637	MFF1816G82R50F
R3256	315-0100-00			RES.,FXD,CMPSN:10 OHM,5%,0.25W	01121	CB1005
R3258	315-0100-00			RES.,FXD,CMPSN:10 OHM,5%,0.25W	01121	CB1005
R3274	315-0301-00			RES.,FXD,CMPSN:300 OHM,5%,0.25W	01121	CB3015
R3275	321-0181-00			RES.,FXD,FILM:750 OHM,1%,0.125W	91637	MFF1816G750R0F
R3276	321-0181-00			RES.,FXD,FILM:750 OHM,1%,0.125W	91637	MFF1816G750R0F
R3278	315-0270-00			RES.,FXD,CMPSN:27 OHM,5%,0.25W	01121	CB2705
R3285	311-1403-00			RES.,VAR,NONWIR:5K OHM,20%,0.50W	01121	10M922
R3296	321-0030-00			RES.,FXD,FILM:20 OHM,1%,0.125W	91637	MFF1816G20R00F
R3299	315-0621-00			RES.,FXD,CMPSN:620 OHM,5%,0.25W	01121	CB6215
R3311	321-0049-00			RES.,FXD,FILM:31.6 OHM,1%,0.125W	91637	MFF1816G31R60F
R3314	321-0065-00			RES.,FXD,FILM:46.4 OHM,1%,0.125W	91637	MFF1816G46R40F
R3326	315-0430-00			RES.,FXD,CMPSN:43 OHM,5%,0.25W	01121	CB4305
R3328	321-0126-00			RES.,FXD,FILM:200 OHM,1%,0.125W	91637	MFF1816G200R0F

Ckt No.	Tektronix Part No.	Serial/Model No. Eff	Dscont	Name & Description	Mfr Code	Mfr Part Number
R3333	315-0821-00			RES.,FXD,CMPSN:820 OHM,5%,0.25W	01121	CB8215
R3334	315-0821-00			RES.,FXD,CMPSN:820 OHM,5%,0.25W	01121	CB8215
R3335	311-1563-00			RES.,VAR,NONWIR:1K OHM,20%,0.50W	73138	91A R1K
R3353	315-0241-00			RES.,FXD,CMPSN:240 OHM,5%,0.25W	01121	CB2415
R3358	321-0126-00			RES.,FXD,FILM:200 OHM,1%,0.125W	91637	MFF1816G200R0F
R3376	315-0301-00			RES.,FXD,CMPSN:300 OHM,5%,0.25W	01121	CB3015
R3382	315-0470-00			RES.,FXD,CMPSN:47 OHM,5%,0.25W	01121	CB4705
R3384	315-0101-00			RES.,FXD,CMPSN:100 OHM,5%,0.25W	01121	CB1015
R3385	315-0101-00			RES.,FXD,CMPSN:100 OHM,5%,0.25W	01121	CB1015
R3391	315-0151-00			RES.,FXD,CMPSN:150 OHM,5%,0.25W	01121	CB1515
R3392	315-0103-00			RES.,FXD,CMPSN:10K OHM,5%,0.25W	01121	CB1035
R3422	315-0750-00			RES.,FXD,CMPSN:75 OHM,5%,0.25W	01121	CB7505
R3438	315-0302-00			RES.,FXD,CMPSN:3K OHM,5%,0.25W	01121	CB3025
R3439	315-0302-00			RES.,FXD,CMPSN:3K OHM,5%,0.25W	01121	CB3025
R3448	315-0511-00			RES.,FXD,CMPSN:510 OHM,5%,0.25W	01121	CB5115
R3449	315-0751-00			RES.,FXD,CMPSN:750 OHM,5%,0.25W	01121	CB7515
R3482	311-1561-00			RES.,VAR,NONWIR:2.5K OHM,20%,0.50W	73138	91A R2500
R3484	311-1559-00			RES.,VAR,NONWIR:10K OHM,20%,0.50W	73138	91A-10001M
R3486	321-0307-00			RES.,FXD,FILM:15.4K OHM,1%,0.125W	91637	MFF1816G15401F
R3487	321-0239-00			RES.,FXD,FILM:3.01K OHM,1%,0.125W	91637	MFF1816G30100F
R3488	321-0277-00			RES.,FXD,FILM:7.5K OHM,1%,0.125W	91637	MFF1816G75000F
R3504	315-0331-00			RES.,FXD,CMPSN:330 OHM,5%,0.25W	01121	CB3315
R3514	321-0065-00			RES.,FXD,FILM:46.4 OHM,1%,0.125W	91637	MFF1816G46R40F
R3516	323-0161-00			RES.,FXD,FILM:464 OHM,1%,0.50W	75042	CECT0-4640F
R3521	315-0750-00			RES.,FXD,CMPSN:75 OHM,5%,0.25W	01121	CB7505
R3522	321-0126-00			RES.,FXD,FILM:200 OHM,1%,0.125W	91637	MFF1816G200R0F
R3532	321-0186-00			RES.,FXD,FILM:845 OHM,1%,0.125W	91637	MFF1816G845R0F
R3534	321-0186-00			RES.,FXD,FILM:845 OHM,1%,0.125W	91637	MFF1816G845R0F
R3536	321-0133-00			RES.,FXD,FILM:237 OHM,1%,0.125W	91637	MFF1816G237R0F
R3538	321-0133-00			RES.,FXD,FILM:237 OHM,1%,0.125W	91637	MFF1816G237R0F
R3548	315-0751-00			RES.,FXD,CMPSN:750 OHM,5%,0.25W	01121	CB7515
R3549	315-0511-00			RES.,FXD,CMPSN:510 OHM,5%,0.25W	01121	CB5115
R3558	311-1311-00			RES.,VAR,NONWIR:1K OHM,20%,1W	01121	73M4G048L102M
R3562	321-0190-00			RES.,FXD,FILM:931 OHM,1%,0.125W	91637	MFF1816G931R0F
R3579	321-0229-00			RES.,FXD,FILM:2.37K OHM,1%,0.125W	91637	MFF1816G23700F
R3580	311-1560-00			RES.,VAR,NONWIR:5K OHM,5%,0.50W	73138	91A R5K
R3582	311-1560-00			RES.,VAR,NONWIR:5K OHM,5%,0.50W	73138	91A R5K
R3587	315-0112-00			RES.,FXD,CMPSN:1.1K OHM,5%,0.25W	01121	CB1125
R3589	315-0470-00			RES.,FXD,CMPSN:47 OHM,5%,0.25W	01121	CB4705
R3590	321-0229-00			RES.,FXD,FILM:2.37K OHM,1%,0.125W	91637	MFF1816G23700F
R3612	315-0752-00			RES.,FXD,CMPSN:7.5K OHM,5%,0.25W	01121	CB7525
R3613	315-0103-00			RES.,FXD,CMPSN:10K OHM,5%,0.25W	01121	CB1035
R3616	315-0752-00			RES.,FXD,CMPSN:7.5K OHM,5%,0.25W	01121	CB7525
R3622	321-0151-00			RES.,FXD,FILM:365 OHM,1%,0.125W	91637	MFF1816G365R0F
R3624	321-0145-00			RES.,FXD,FILM:316 OHM,1%,0.125W	91637	MFF1816G316R0F
R3625	321-0151-00			RES.,FXD,FILM:365 OHM,1%,0.125W	91637	MFF1816G365R0F
R3626	321-0145-00			RES.,FXD,FILM:316 OHM,1%,0.125W	91637	MFF1816G316R0F
R3632	323-0106-00			RES.,FXD,FILM:124 OHM,1%,0.50W	91637	MFF1226G124R0F
R3634	311-1563-00			RES.,VAR,NONWIR:1K OHM,20%,0.50W	73138	91A R1K
R3645	315-0392-00			RES.,FXD,CMPSN:3.9K OHM,5%,0.25W	01121	CB3925
R3647	315-0241-00			RES.,FXD,CMPSN:240 OHM,5%,0.25W	01121	CB2415
R3661	321-0126-00			RES.,FXD,FILM:200 OHM,1%,0.125W	91637	MFF1816G200R0F
R3683	315-0470-00			RES.,FXD,CMPSN:47 OHM,5%,0.25W	01121	CB4705
R3684	315-0470-00			RES.,FXD,CMPSN:47 OHM,5%,0.25W	01121	CB4705
R3685	311-1567-00			RES.,VAR,NONWIR:TRMR,100 OHM,0.50W	73138	91-89-0
R3687	315-0270-00			RES.,FXD,CMPSN:27 OHM,5%,0.25W	01121	CB2705
R3695	321-0030-00			RES.,FXD,FILM:20 OHM,1%,0.125W	91637	MFF1816G20R00F
R3712	315-0103-00			RES.,FXD,CMPSN:10K OHM,5%,0.25W	01121	CB1035

Ckt No.	Tektronix Part No.	Serial/Model No. Eff	Dscont	Name & Description	Mfr Code	Mfr Part Number
R3714	315-0752-00			RES.,FXD,CMPSN:7.5K OHM,5%,0.25W	01121	CB7525
R3716	315-0103-00			RES.,FXD,CMPSN:10K OHM,5%,0.25W	01121	CB1035
R3724	321-0145-00			RES.,FXD,FILM:316 OHM,1%,0.125W	91637	MFF1816G316R0F
R3725	321-0151-00			RES.,FXD,FILM:365 OHM,1%,0.125W	91637	MFF1816G365R0F
R3735	311-1558-00			RES.,VAR,NONWIR:20K OHM,20%,0.50W	73138	91-80-0
R3742	315-0392-00			RES.,FXD,CMPSN:3.9K OHM,5%,0.25W	01121	CB3925
R3744	315-0390-00			RES.,FXD,CMPSN:39 OHM,5%,0.25W	01121	CB3905
R3752	321-0170-00			RES.,FXD,FILM:576 OHM,1%,0.125W	91637	MFF1816G576R0F
R3753	321-0170-00			RES.,FXD,FILM:576 OHM,1%,0.125W	91637	MFF1816G576R0F
R3754	321-0089-00			RES.,FXD,FILM:82.5 OHM,1%,0.125W	91637	MFF1816G82R50F
R3756	315-0100-00			RES.,FXD,CMPSN:10 OHM,5%,0.25W	01121	CB1005
R3758	315-0100-00			RES.,FXD,CMPSN:10 OHM,5%,0.25W	01121	CB1005
R3774	315-0301-00			RES.,FXD,CMPSN:300 OHM,5%,0.25W	01121	CB3015
R3775	321-0181-00			RES.,FXD,FILM:750 OHM,1%,0.125W	91637	MFF1816G750R0F
R3776	321-0181-00			RES.,FXD,FILM:750 OHM,1%,0.125W	91637	MFF1816G750R0F
R3782	311-1403-00			RES.,VAR,NONWIR:5K OHM,20%,0.50W	01121	10M922
R3794	321-0030-00			RES.,FXD,FILM:20 OHM,1%,0.125W	91637	MFF1816G20R00F
R3798	315-0621-00			RES.,FXD,CMPSN:620 OHM,5%,0.25W	01121	CB6215
R3815	315-0102-00			RES.,FXD,CMPSN:1K OHM,5%,0.25W	01121	CB1025
R3816	315-0302-00			RES.,FXD,CMPSN:3K OHM,5%,0.25W	01121	CB3025
R3817	315-0302-00			RES.,FXD,CMPSN:3K OHM,5%,0.25W	01121	CB3025
R3825	315-0102-00			RES.,FXD,CMPSN:1K OHM,5%,0.25W	01121	CB1025
R3828	321-0064-00			RES.,FXD,FILM:45.3 OHM,1%,0.125W	91637	MFF1816G45R30F
R3834	321-0201-00			RES.,FXD,FILM:1.21K OHM,1%,0.125W	91637	MFF1816G12100F
R3835	311-1564-00			RES.,VAR,NONWIR:500 OHM,20%,0.50W	73138	91A R500
R3838	315-0470-00			RES.,FXD,CMPSN:47 OHM,5%,0.25W	01121	CB4705
R3839	315-0431-00			RES.,FXD,CMPSN:430 OHM,5%,0.25W	01121	CB4315
R3842	321-0192-00			RES.,FXD,FILM:976 OHM,1%,0.125W	91637	MFF1816G976R0F
R3843	321-0192-00			RES.,FXD,FILM:976 OHM,1%,0.125W	91637	MFF1816G976R0F
R3849	315-0222-00			RES.,FXD,CMPSN:2.2K OHM,5%,0.25W	01121	CB2225
R3854	315-0241-00			RES.,FXD,CMPSN:240 OHM,5%,0.25W	01121	CB2415
R3858	321-0126-00			RES.,FXD,FILM:200 OHM,1%,0.125W	91637	MFF1816G200R0F
R3868	315-0183-00			RES.,FXD,CMPSN:18K OHM,5%,0.25W	01121	CB1835
R3876	315-0301-00			RES.,FXD,CMPSN:300 OHM,5%,0.25W	01121	CB3015
R3881	315-0470-00			RES.,FXD,CMPSN:47 OHM,5%,0.25W	01121	CB4705
R3882	311-1561-00			RES.,VAR,NONWIR:2.5K OHM,20%,0.50W	73138	91A R2500
R3884	311-1559-00			RES.,VAR,NONWIR:10K OHM,20%,0.50W	73138	91A-10001M
R3885	315-0101-00			RES.,FXD,CMPSN:100 OHM,5%,0.25W	01121	CB1015
R3886	315-0101-00			RES.,FXD,CMPSN:100 OHM,5%,0.25W	01121	CB1015
R3889	315-0103-00			RES.,FXD,CMPSN:10K OHM,5%,0.25W	01121	CB1035
R3891	315-0151-00			RES.,FXD,CMPSN:150 OHM,5%,0.25W	01121	CB1515
R3893	315-0103-00			RES.,FXD,CMPSN:10K OHM,5%,0.25W	01121	CB1035
R3903	315-0112-00			RES.,FXD,CMPSN:1.1K OHM,5%,0.25W	01121	CB1125
R3904	315-0221-00			RES.,FXD,CMPSN:220 OHM,5%,0.25W	01121	CB2215
R3906	315-0203-00			RES.,FXD,CMPSN:20K OHM,5%,0.25W	01121	CB2035
R3914	315-0122-00			RES.,FXD,CMPSN:1.2K OHM,5%,0.25W	01121	CB1225
R3916	315-0471-00			RES.,FXD,CMPSN:470 OHM,5%,0.25W	01121	CB4715
R3922	315-0102-00			RES.,FXD,CMPSN:1K OHM,5%,0.25W	01121	CB1025
R3924	315-0122-00			RES.,FXD,CMPSN:1.2K OHM,5%,0.25W	01121	CB1225
R3932	315-0751-00			RES.,FXD,CMPSN:750 OHM,5%,0.25W	01121	CB7515
R3934	321-0196-00			RES.,FXD,FILM:1.07K OHM,1%,0.125W	91637	MFF1816G10700F
R3944	315-0331-00			RES.,FXD,CMPSN:330 OHM,5%,0.25W	01121	CB3315
R3946	321-0126-00			RES.,FXD,FILM:200 OHM,1%,0.125W	91637	MFF1816G200R0F
R3952	315-0101-00			RES.,FXD,CMPSN:100 OHM,5%,0.25W	01121	CB1015
R3956	315-0390-00			RES.,FXD,CMPSN:39 OHM,5%,0.25W	01121	CB3905
R3958	315-0222-00			RES.,FXD,CMPSN:2.2K OHM,5%,0.25W	01121	CB2225
R3975	311-1559-00			RES.,VAR,NONWIR:10K OHM,20%,0.50W	73138	91A-10001M
R3981	321-0307-00			RES.,FXD,FILM:15.4K OHM,1%,0.125W	91637	MFF1816G15401F

Ckt No.	Tektronix Part No.	Serial/Model No. Eff	Dscont	Name & Description	Mfr Code	Mfr Part Number
R3983	321-0307-00			RES.,FXD,FILM:15.4K OHM,1%,0.125W	91637	MFF1816G15401F
R3986	321-0277-00			RES.,FXD,FILM:7.5K OHM,1%,0.125W	91637	MFF1816G75000F
R3987	321-0277-00			RES.,FXD,FILM:7.5K OHM,1%,0.125W	91637	MFF1816G75000F
R3988	321-0253-00			RES.,FXD,FILM:4.22K OHM,1%,0.125W	91637	MFF1816G42200F
R3989	321-0253-00			RES.,FXD,FILM:4.22K OHM,1%,0.125W	91637	MFF1816G42200F
RT3267	307-0181-00			RES.,THERMAL:100K OHM,10%,4MW/DEG C	15454	1DE104-K-220EC
RT3767	307-0181-00			RES.,THERMAL:100K OHM,10%,4MW/DEG C	15454	1DE104-K-220EC
S3414	260-1486-00			SWITCH,PUSH:	80009	260-1486-00
S3995	260-1208-00			SWITCH,PUSH:DPDT	80009	260-1208-00
U3290	155-0078-10			MICROCIRCUIT,LI:ML,VERTICAL AMPLIFIER	80009	155-0078-10
U3605	160-0204-01			MICROCIRCUIT,DI:256 X 4 ROM	80009	160-0204-01
U3705	156-0392-00			MICROCIRCUIT,DI:QUAD LATCH	01295	SN74LS175N
U3790	155-0078-10			MICROCIRCUIT,LI:ML,VERTICAL AMPLIFIER	80009	155-0078-10
U3805	156-0480-00			MICROCIRCUIT,DI:QUAD 2-INPUT AND GATE	80009	156-0480-00
U3905	156-0382-00			MICROCIRCUIT,DI:QUAD 2-INPUT NAND GATE	01295	SN74LS00N
VR3096	152-0217-00			SEMICOND DEVICE:ZENER,0.4W,8.2V,5%	80009	152-0217-00
VR3356	152-0166-00			SEMICOND DEVICE:ZENER,0.4W,6.2V,5%	80009	152-0166-00
VR3597	152-0217-00			SEMICOND DEVICE:ZENER,0.4W,8.2V,5%	80009	152-0217-00
VR3662	152-0166-00			SEMICOND DEVICE:ZENER,0.4W,6.2V,5%	80009	152-0166-00
VR3824	152-0306-00			SEMICOND DEVICE:ZENER,0.4W,9.1V,5%	80009	152-0306-00

A3 VERTICAL MODE BOARD CHANGES

(CHANGE TO:)

S350	260-1944-00			SWITCH,PUSH:5 BTN,2 POLE	80009	260-1944-00

(ADD:)

C11	290-0246-00			CAP.,FXD,ELCTLT:3.3UF,10%,15V	56289	162D335X9015CD2
C13	290-0246-00			CAP.,FXD,ELCTLT:3.3UF,10%,15V	56289	162D335X9015CD2
C14	290-0246-00			CAP.,FXD,ELCTLT:3.3UF,10%,15V	56289	162D335X9015CD2
C16	290-0246-00			CAP.,FXD,ELCTLT:3.3UF,10%,15V	56289	162D335X9015CD2
C50	281-0775-00			CAP.,FXD,CER DI:0.1UF,20%,50V	72982	8005D9AABZ5U104M
C51	281-0773-00			CAP.,FXD,CER DI:0.01UF,10%,100V	72982	8005H9AADW5R103K
CR48	152-0141-02			SEMICOND DEVICE:SILICON,30V,150MA	80009	152-0141-02
CR50	152-0141-02			SEMICOND DEVICE:SILICON,30V,150MA	80009	152-0141-02
CR51	152-0141-02			SEMICOND DEVICE:SILICON,30V,150MA	80009	152-0141-02
DS1572	150-0035-00			LAMP,GLOW:90V,0.3MA	53944	A1B-3
DS1572	----- -----			(466 ONLY)		
Q51	151-0301-00			TRANSISTOR:SILICON,PNP	04713	2N2907A
Q61	151-0301-00			TRANSISTOR:SILICON,PNP	04713	2N2907A
R11	315-0102-00			RES.,FXD,CMPSN:1K OHM,5%,0.25W	01121	CB1025
R12	315-0621-00			RES.,FXD,CMPSN:620 OHM,5%,0.25W	01121	CB6215
R16	315-0621-00			RES.,FXD,CMPSN:620 OHM,5%,0.25W	01121	CB6215
R17	315-0102-00			RES.,FXD,CMPSN:1K OHM,5%,0.25W	01121	CB1025
R18	315-0621-00			RES.,FXD,CMPSN:620 OHM,5%,0.25W	01121	CB6215
R19	315-0102-00			RES.,FXD,CMPSN:1K OHM,5%,0.25W	01121	CB1025
R21	315-0681-00			RES.,FXD,CMPSN:680 OHM,5%,0.25W	01121	CB6815
R22	315-0102-00			RES.,FXD,CMPSN:1K OHM,5%,0.25W	01121	CB1025
R26	315-0103-00			RES.,FXD,CMPSN:10K OHM,5%,0.25W	01121	CB1035
R27	315-0103-00			RES.,FXD,CMPSN:10K OHM,5%,0.25W	01121	CB1035
R28	315-0102-00			RES.,FXD,CMPSN:1K OHM,5%,0.25W	01121	CB1025

Ckt No.	Tektronix Part No.	Serial/Model No. Eff	Dscont	Name & Description	Mfr Code	Mfr Part Number
R29	315-0102-00			RES.,FXD,CMPSN:1K OHM,5%,0.25W	01121	CB1025
R30	315-0103-00			RES.,FXD,CMPSN:10K OHM,5%,0.25W	01121	CB1035
R48	315-0272-00			RES.,FXD,CMPSN:2.7K OHM,5%,0.25W	01121	CB2725
R49	315-0272-00			RES.,FXD,CMPSN:2.7K OHM,5%,0.25W	01121	CB2725
R51	315-0102-00			RES.,FXD,CMPSN:1K OHM,5%,0.25W	01121	CB1025
U50	156-0652-00			MICROCIRCUIT,DI:QUAD 2-INPUT EXCL NOR GATE	01295	SN74LS266N

A4 VERTICAL OUTPUT BOARD CHANGES

(CHANGE TO:)

C409	281-0097-00			CAP.,VAR,CER DI:9-35PF,200V	72982	538-006-D9-35
R409	321-0113-00			RES.,FXD,FILM:147 OHM,1%,0.125W	91637	MFF1816G147R0F

A5 TRIGGER BOARD CHANGES

(CHANGE TO:)

C603	281-0217-00			CAP.,VAR,CER DI:0.5-3.5PF,400V	52763	RT202-08SB.6/3.5
C604	281-0814-00			CAP.,FXD,CER DI:100PF,10%,100V	72982	8035D2AADC0G101K
C606	281-0207-00			CAP.,VAR,PLSTC:2-18PF,100V	80031	2807C00218MH02F0
C607	281-0579-00			CAP.,FXD,CER DI:21PF,5%,500V	72982	301-050C0G0210J
C676	281-0122-00			CAP.,VAR,CER DI:2.5-9PF,100V	72982	518-000A2.5-9
C956	283-0223-00			CAP.,FXD,CER DI:3PF,+/-18PF,50V		
Q672	151-0367-00			TRANSISTOR:SILICON,NPN,SEL FROM 3571TP	80009	151-0367-00
Q682	151-0367-00			TRANSISTOR:SILICON,NPN,SEL FROM 3571TP	80009	151-0367-00
Q954	151-0220-00			TRANSISTOR:SILICON,PNP	80009	151-0220-00
R540	315-0222-00			RES.,FXD,CMPSN:2.2K OHM,5%,0.25W	01121	CB2225
R603	325-0245-00			RES.,FXD,FILM:3.32M OHM,1%,0.125W	01121	CC3324F2
R604	321-0381-00			RES.,FXD,FILM:90.9K OHM,1%,0.125W	91637	MFF1816G90901F
R606	321-0790-00			RES.,FXD,FILM:990K OHM,1%,0.125W	14298	AME55D9903F
R607	321-0450-00			RES.,FXD,FILM:475K OHM,1%,0.125W	91637	MFF1816G47502F
R640	315-0222-00			RES.,FXD,CMPSN:2.2K OHM,5%,0.25W	01121	CB2225
R672	315-0270-00			RES.,FXD,CMPSN:27 OHM,5%,0.25W	01121	CB2705
R673	311-1260-00			RES.,VAR,NONWIR:250 OHM,10%,0.50W	32997	3329P-L58-251
R674	321-0198-00			RES.,FXD,FILM:1.13K OHM,1%,0.125W	91637	MFF1816G11300F
R675	311-1567-00			RES.,VAR,NONWIR:TRMR,100 OHM,0.50W	73138	91-89-0
R679	311-1567-00			RES.,VAR,NONWIR:TRMR,100 OHM,0.50W	73138	91-89-0
R682	315-0270-00			RES.,FXD,CMPSN:27 OHM,5%,0.25W	01121	CB2705
R683	315-0162-00			RES.,FXD,CMPSN:1.6K OHM,5%,0.25W	01121	CB1625
R684	321-0198-00			RES.,FXD,FILM:1.13K OHM,1%,0.125W	91637	MFF1816G11300F
R694	321-0175-00			RES.,FXD,FILM:649 OHM,1%,0.125W	91637	MFF1816G649R0F
R944	315-0274-00			RES.,FXD,CMPSN:270K OHM,5%,0.25W	01121	CB2745
R949	315-0360-00			RES.,FXD,CMPSN:36 OHM,5%,0.25W	01121	CB3605
S610	263-0068-00			SW SL ACTR ASSY:A SOURCE,60F 6 POSITION	80009	263-0068-00

(ADD:)

C608	281-0811-00			CAP.,FXD,CER DI:10PF,10%,100V	72982	8035D2AADC1G100K
C673	281-0763-00			CAP.,FXD,CER DI:47PF,10%,100V	72982	8035D9AADC1G470K
C683	283-0116-00			CAP.,FXD,CER DI:820PF,5%,500V	72982	801-547B821J
C685	281-0812-00			CAP.,FXD,CER DI:1000PF,10%,100V	72982	8035D9AADX7R102K

@

Ckt No.	Tektronix Part No.	Serial/Model No. Eff	Dscont	Name & Description	Mfr Code	Mfr Part Number
C919	281-0786-00			CAP.,FXD,CER DI:150PF,10%,100V	72982	8035D2AADX5P151K
CR674	152-0141-02			SEMICOND DEVICE:SILICON,30V,150MA	80009	152-0141-02
CR684	152-0141-02			SEMICOND DEVICE:SILICON,30V,150MA	80009	152-0141-02
Q919	151-0190-00			TRANSISTOR:SILICON,NPN	80009	151-0190-00
(REMOVE:)						
C822	290-0534-00			CAP.,FXD,ELCTLT:1UF,20%,35V	56289	196D105X0035HA1
C822	----- -----			(DM44 ONLY)		
C887	283-0003-00			CAP.,FXD,CER DI:0.01UF,+80-20%,150V	72982	855-558Z5U-103Z
C895	283-0003-00			CAP.,FXD,CER DI:0.01UF,+80-20%,150V	72982	855-558Z5U-103Z
C897	283-0003-00			CAP.,FXD,CER DI:0.01UF,+80-20%,150V	72982	855-558Z5U-103Z
CR895	152-0141-02			SEMICOND DEVICE:SILICON,30V,150MA	80009	152-0141-02
CR896	152-0141-02			SEMICOND DEVICE:SILICON,30V,150MA	80009	152-0141-02
CR897	152-0141-02			SEMICOND DEVICE:SILICON,30V,150MA	80009	152-0141-02
CR986	152-0141-02			SEMICOND DEVICE:SILICON,30V,150MA	80009	152-0141-02
CR987	152-0141-02			SEMICOND DEVICE:SILICON,30V,150MA	80009	152-0141-02
CR989	152-0141-02			SEMICOND DEVICE:SILICON,30V,150MA	80009	152-0141-02
Q678	151-0223-00			TRANSISTOR:SILICON,NPN	80009	151-0223-00
Q688	151-0223-00			TRANSISTOR:SILICON,NPN	80009	151-0223-00
R602	315-0470-00			RES.,FXD,CMPSN:47 OHM,5%,0.25W	01121	CB4705
R687	301-0821-00			RES.,FXD,CMPSN:820 OHM,5%,0.50W	01121	EB8215
R689	315-0681-00			RES.,FXD,CMPSN:680 OHM,5%,0.25W	01121	CB6815
R691	315-0302-00			RES.,FXD,CMPSN:3K OHM,5%,0.25W	01121	CB3025
R876	321-0230-00			RES.,FXD,FILM:2.43K OHM,1%,0.125W	91637	MFF1816G24300F
R895	321-0210-00			RES.,FXD,FILM:1.5K OHM,1%,0.125W	91637	MFF1816G15000F
R984	315-0122-00			RES.,FXD,CMPSN:1.2K OHM,5%,0.25W	01121	CB1225
R986	315-0103-00			RES.,FXD,CMPSN:10K OHM,5%,0.25W	01121	CB1035
R989	315-0682-00			RES.,FXD,CMPSN:6.8K OHM,5%,0.25W	01121	CB6825

A6 INTERFACE BOARD CHANGES

(ADD:)						
CR1761	152-0556-00			SEMICOND DEVICE:BRIDGE,50V,2.5A	04713	SDA10271K
R1213	321-0255-00			RES.,FXD,FILM:4.42K OHM,1%,0.125W	91637	MFF1816G44200F

REPLACEABLE MECHANICAL PARTS

PARTS ORDERING INFORMATION

Replacement parts are available from or through your local Tektronix, Inc. Field Office or representative.

Changes to Tektronix instruments are sometimes made to accommodate improved components as they become available, and to give you the benefit of the latest circuit improvements developed in our engineering department. It is therefore important, when ordering parts, to include the following information in your order: Part number, instrument type or number, serial number, and modification number if applicable.

If a part you have ordered has been replaced with a new or improved part, your local Tektronix, Inc. Field Office or representative will contact you concerning any change in part number.

Change information, if any, is located at the rear of this manual.

SPECIAL NOTES AND SYMBOLS

X000	Part first added at this serial number
00X	Part removed after this serial number

FIGURE AND INDEX NUMBERS

Items in this section are referenced by figure and index numbers to the illustrations.

INDENTATION SYSTEM

This mechanical parts list is indented to indicate item relationships. Following is an example of the indentation system used in the description column.

1 2 3 4 5 Name & Description

Assembly and/or Component
Attaching parts for Assembly and/or Component
- - - * - - -
Detail Part of Assembly and/or Component
Attaching parts for Detail Part
- - - * - - -
Parts of Detail Part
Attaching parts for Parts of Detail Part
- - - * - - -

Attaching Parts always appear in the same indentation as the item it mounts, while the detail parts are indented to the right. Indented items are part of, and included with, the next higher indentation. The separation symbol - - - * - - - indicates the end of attaching parts.

Attaching parts must be purchased separately, unless otherwise specified.

ITEM NAME

In the Parts List, an Item Name is separated from the description by a colon (:). Because of space limitations, an Item Name may sometimes appear as incomplete. For further Item Name identification, the U.S. Federal Cataloging Handbook H6-1 can be utilized where possible.

ABBREVIATIONS

"	INCH
#	NUMBER SIZE
ACTR	ACTUATOR
ADPTR	ADAPTER
ALIGN	ALIGNMENT
AL	ALUMINUM
ASSEM	ASSEMBLED
ASSY	ASSEMBLY
ATTEN	ATTENUATOR
AWG	AMERICAN WIRE GAGE
BD	BOARD
BRKT	BRACKET
BRS	BRASS
BRZ	BRONZE
BSHG	BUSHING
CAB	CABINET
CAP	CAPACITOR
CER	CERAMIC
CHAS	CHASSIS
CKT	CIRCUIT
COMP	COMPOSITION
CONN	CONNECTOR
COV	COVER
CPLG	COUPLING
CRT	CATHODE RAY TUBE
DEG	DEGREE
DWR	DRAWER
ELCTRN	ELECTRON
ELEC	ELECTRICAL
ELCTLT	ELECTROLYTIC
ELEM	ELEMENT
EPL	ELECTRICAL PARTS LIST
EQPT	EQUIPMENT
EXT	EXTERNAL
FIL	FILLISTER HEAD
FLEX	FLEXIBLE
FLH	FLAT HEAD
FLTR	FILTER
FR	FRAME or FRONT
FSTNR	FASTENER
FT	FOOT
FXD	FIXED
GSKT	GASKET
HDL	HANDLE
HEX	HEXAGON
HEX HD	HEXAGONAL HEAD
HEX SOC	HEXAGONAL SOCKET
HLCPS	HELICAL COMPRESSION
HLEXT	HELICAL EXTENSION
HV	HIGH VOLTAGE
IC	INTEGRATED CIRCUIT
ID	INSIDE DIAMETER
IDENT	IDENTIFICATION
IMPLR	IMPELLER
IN	INCH
INCAND	INCANDESCENT
INSUL	INSULATOR
INTL	INTERNAL
LPHLDR	LAMPHOLDER
MACH	MACHINE
MECH	MECHANICAL
MTG	MOUNTING
NIP	NIPPLE
NON WIRE	NOT WIRE WOUND
OBD	ORDER BY DESCRIPTION
OD	OUTSIDE DIAMETER
OVH	OVAL HEAD
PH BRZ	PHOSPHOR BRONZE
PL	PLAIN or PLATE
PLSTC	PLASTIC
PN	PART NUMBER
PNH	PAN HEAD
PWR	POWER
RCPT	RECEPTACLE
RES	RESISTOR
RGD	RIGID
RLF	RELIEF
RTNR	RETAINER
SCH	SOCKET HEAD
SCOPE	OSCILLOSCOPE
SCR	SCREW
SE	SINGLE END
SECT	SECTION
SEMICOND	SEMICONDUCTOR
SHLD	SHIELD
SHLDR	SHOULDERED
SKT	SOCKET
SL	SLIDE
SLFLKG	SELF-LOCKING
SLVG	SLEEVING
SPR	SPRING
SQ	SQUARE
SST	STAINLESS STEEL
STL	STEEL
SW	SWITCH
T	TUBE
TERM	TERMINAL
THD	THREAD
THK	THICK
TNSN	TENSION
TPG	TAPPING
TRH	TRUSS HEAD
V	VOLTAGE
VAR	VARIABLE
W/	WITH
WSHR	WASHER
XFMR	TRANSFORMER
XSTR	TRANSISTOR

CROSS INDEX—MFR. CODE NUMBER TO MANUFACTURER

Mfr. Code	Manufacturer	Address	City, State, Zip
01121	ALLEN-BRADLEY COMPANY	1201 2ND STREET SOUTH	MILWAUKEE, WI 53204
04713	MOTOROLA, INC., SEMICONDUCTOR PROD. DIV.	5005 E MCDOWELL RD,PO BOX 20923	PHOENIX, AZ 85036
56289	SPRAGUE ELECTRIC CO.		NORTH ADAMS, MA 01247
72982	ERIE TECHNOLOGICAL PRODUCTS, INC.	644 W. 12TH ST.	ERIE, PA 16512
80009	TEKTRONIX, INC.	P O BOX 500	BEAVERTON, OR 97077
91637	DALE ELECTRONICS, INC.	P. O. BOX 609	COLUMBUS, NE 68601

Fig. & Index No.	Tektronix Part No.	Serial/Model No. Eff	Dscont	Qty	1 2 3 4 5 Name & Description	Mfr Code	Mfr Part Number
					MECHANICAL DIFFERENCES BETWEEN STANDARD INSTRUMENT WHEN OPTION 10 IS ADDED		
-1	333-2580-00			1	PANEL,FRONT:	80009	333-2580-00
	----- -----			-	(464 ONLY)		
	333-2581-00			1	PANEL,FRONT:	80009	333-2581-00
	----- -----			-	(466 ONLY)		
-2	----- -----			1	CKT BOARD ASSY:(SEE A5 EPL)		
-3	136-0260-02			2	. SOCKET,PLUG-IN:16 CONTACT,LOW CLEARANCE	82647	C9316-18
-4	----- -----			1	. SL SW ACTR ASSY:(SEE S610 EPL)		
-5	136-0252-04			108	. SOCKET,PIN TERM:0.188 INCH LONG	22526	75060
-6	366-1557-85			1	PUSH BUTTON:BW LIMIT	80009	366-1557-85
-7	384-1542-00			1	EXTENSION SHAFT:11.682 L 0.187 SQ,PLASTIC	80009	384-1542-00
-8	384-1560-00			1	EXTENSION SHAFT:4.834 L	80009	384-1560-00
-9	----- -----			1	CKT BOARD ASSY:VERTICAL PREAMP(SEE A2 EPL)		
-10	136-0260-02			2	. SOCKET,PLUG-IN:16 CONTACT,LOW CLEARANCE	82647	C9316-18
-11	131-0566-00			2	. LINK,TERM.CONNE:0.086 DIA X 2.375 INCH L	55210	L-2007-1
-12	131-0608-00			11	. TERMINAL,PIN:0.365 L X 0.25 PH,BRZ,GOLD PL	22526	47357
-13	136-0252-04			171	. SOCKET,PIN TERM:0.188 INCH LONG	22526	75060
-14	131-1003-00			10	. CONNECTOR BODY,:CKT BD MT,2 PRONG	80009	131-1003-00
-15	136-0269-02			2	. SOCKET,PLUG-IN:14 CONTACT,LOW CLEARANCE	01295	C95140
-16	----- -----			2	. RES.,VAR,NONWW:(SEE R1285,R1782 EPL)		
-17	----- -----			1	. SWITCH,PUSH:(SEE S1414 EPL)		
-18	361-0411-00			2	. SPACER,PUSH SW:0.13 W X 0.375 INCH L,PLSTC	71590	J64285-00
	214-0579-00			5	. TERM.,TEST PT:BRS CD PL	80009	214-0579-00
-19	366-1557-84			1	PUSH BUTTON:TRIG VIEW	80009	366-1557-84
-20	----- -----			1	CKT BOARD ASSY:VERT MODE SW(SEE A3 EPL)		
-21	136-0269-02			1	. SOCKET,PLUG-IN:14 CONTACT,LOW CLEARANCE	01295	C95140
-22	131-0608-00			18	. TERMINAL,PIN:0.365 L X 0.25 PH,BRZ,GOLD PL	22526	47357
-23	136-0252-04			18	. SOCKET,PIN TERM:0.188 INCH LONG	22526	75060
-24	----- -----			2	. SWITCH,PUSH:(SEE S350 EPL)		
	175-2637-00			1	CA ASSY,SP,ELEC:7,26 AWG,11.0 L	80009	175-2637-00
	175-2717-00			1	CA ASSY,SP,ELEC:2,26 AWG,6.0 L	80009	175-2717-00
	195-0465-00			1	LEAD,ELECTRICAL:26 AWG,7.0 L	80009	195-0465-00
	195-0466-00			1	LEAD,ELECTRICAL:26 AWG,9.0 L	80009	195-0466-00
	195-0467-00			1	LEAD,ELECTRICAL:26 AWG,26.0 L	80009	195-0467-00
	198-4243-00			1	WIRE SET,ELEC:	80009	198-4243-00
	352-0163-00			1	. HLDR,TERM CONN:5 WIRE BLACK,0.1 SPACING	80009	362-0163-00

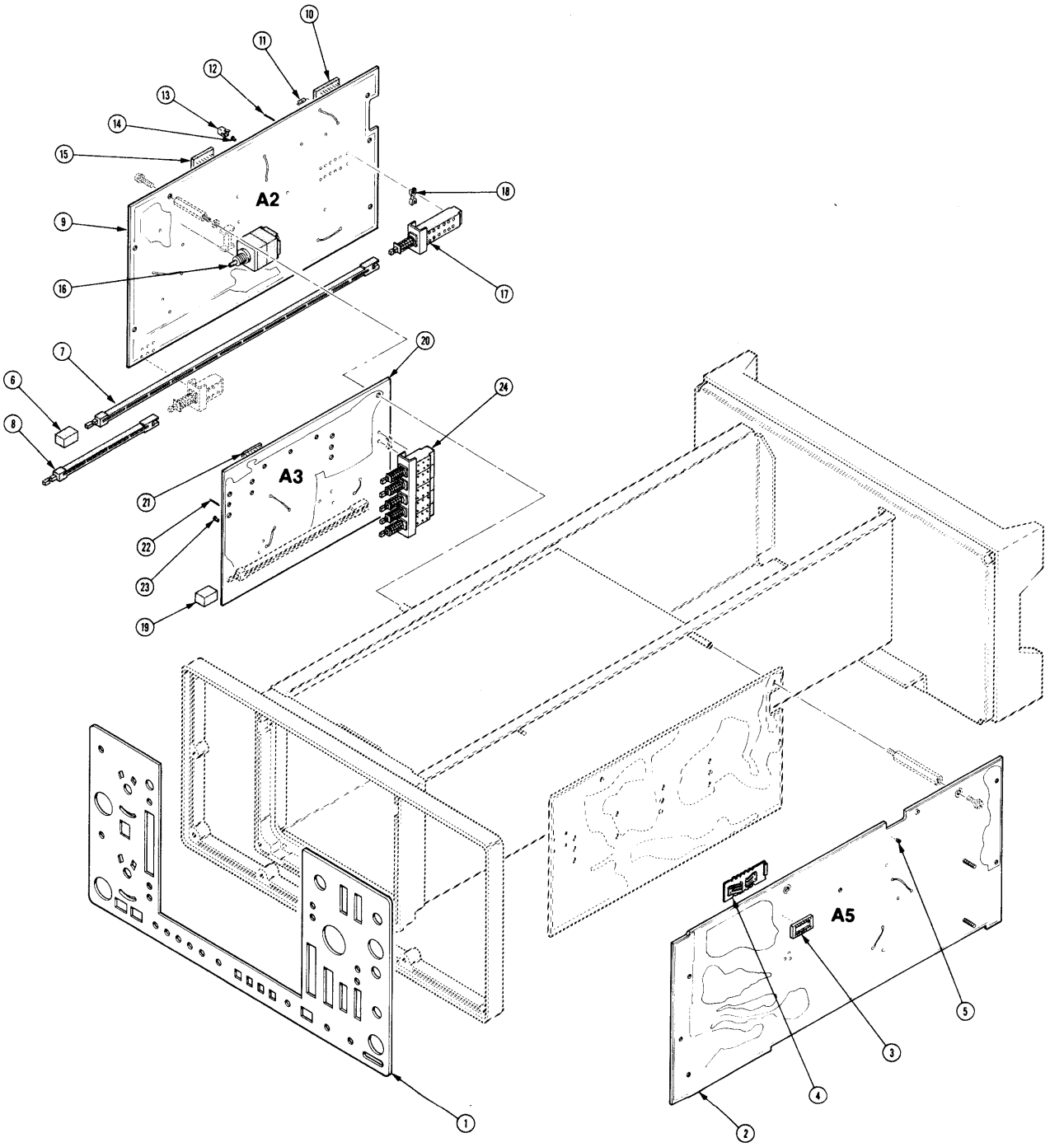
A2
A3
A5
1
2
3
4
5
6
7
8
9
10
11
12
13
14
15
16
17
18
19
20
21
22
23
24

DIAGRAMS AND CIRCUIT BOARD ILLUSTRATIONS

Symbols and Reference Designators

Electrical components shown on the diagrams are in the following units unless noted otherwise:

Capacitors = Values one or greater are in picofarads (pF).
Values less than one are in microfarads (μF).
Resistors = Ohms (Ω).

Graphic symbols and class designation letters are based on ANSI Standard Y32.2-1975.

Logic symbology is based on ANSI Y32.14-1973 in terms of positive logic. Logic symbols depict the logic function performed and may differ from the manufacturer's data.

The overline on a signal name indicates that the signal performs its intended function when it goes to the low state.

Abbreviations are based on ANSI Y1.1-1972.

Other ANSI standards that are used in the preparation of diagrams by Tektronix, Inc. are:

Y14.15, 1966	Drafting Practices.
Y14.2, 1973	Line Conventions and Lettering.
Y10.5, 1968	Letter Symbols for Quantities Used in Electrical Science and Electrical Engineering.

The following prefix letters are used as reference designators to identify components or assemblies on the diagrams.

A	Assembly, separable or repairable (circuit board, etc)
AT	Attenuator, fixed or variable
B	Motor
BT	Battery
C	Capacitor, fixed or variable
CB	Circuit breaker
CR	Diode, signal or rectifier
DL	Delay line
DS	Indicating device (lamp)
E	Spark Gap, Ferrite bead
F	Fuse
FL	Filter
H	Heat dissipating device (heat sink, heat radiator, etc)
HR	Heater
HY	Hybrid circuit
J	Connector, stationary portion
K	Relay
L	Inductor, fixed or variable
M	Meter
P	Connector, movable portion
Q	Transistor or silicon-controlled rectifier
R	Resistor, fixed or variable
RT	Thermistor
S	Switch or contactor
T	Transformer
TC	Thermocouple
TP	Test point
U	Assembly, inseparable or non-repairable (integrated circuit, etc.)
V	Electron tube
VR	Voltage regulator (zener diode, etc.)
W	Wirestrap or cable
Y	Crystal
Z	Phase shifter

The following special symbols may appear on the diagrams:

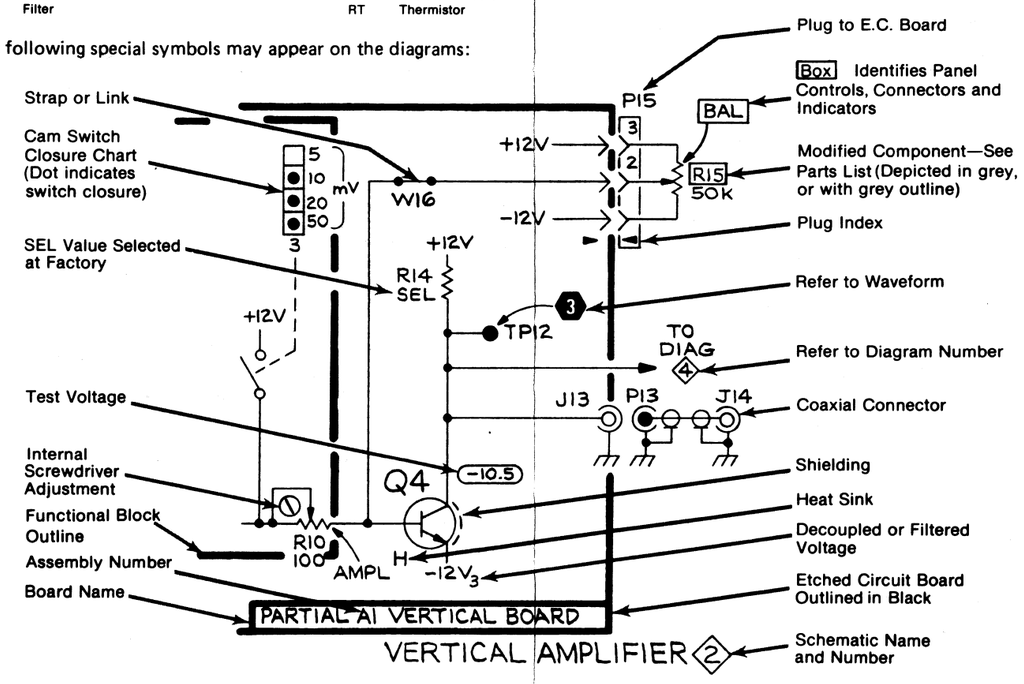

@

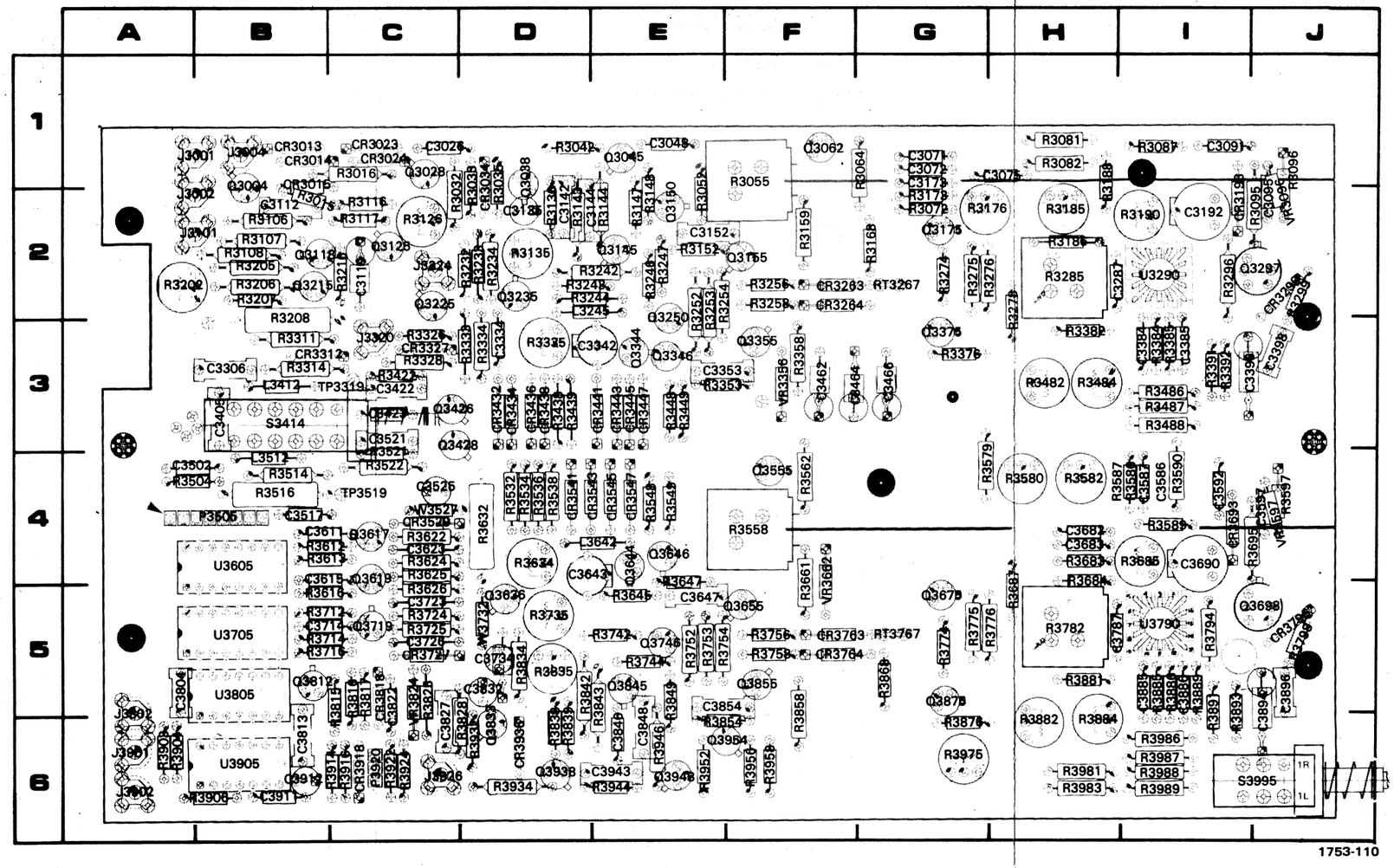

Figure Option 10-8. A2 Vertical Preamp board component locations.

CKT NO	GRID LOC	CKT NO	GRID LOC	CKT NO	GRID LOC	CKT NO	GRID LOC	CKT NO	GRID LOC	CKT NO	GRID LOC	CKT NO	GRID LOC	CKT NO	GRID LOC	CKT NO	GRID LOC	CKT NO	GRID LOC	CKT NO	GRID LOC	CKT NO	GRID LOC	CKT NO	GRID LOC
C3026	1C	C3306	3B	C3521	3C	C3726	5C	C3912	6B	CR3434	3D	CR3764	5F	L3245	2D	Q3150	1E	Q3619	5C	Q3954	6E	R3096	2J	R3173	2G
C3048	1E	C3334	3D	C3525	4C	C3734	5D	C3943	6E	CR3436	3D	CR3796	5J	L3412	3B	Q3155	2F	Q3636	5D			R3106	2B	R3176	2G
C3071	1G	C3342	3E	C3586	4H	C3787	5H			CR3438	3D	CR3818	5C	L3512	3B	Q3175	2G	Q3644	4E	R3015	1B	R3107	2B	R3185	2H
C3072	1G	C3353	3E	C3587	4I	C3804	5A	CR3013	1B	CR3441	3D	CR3918	6C	L3642	4D	Q3215	2B	Q3646	4E	R3016	1C	R3108	2B	R3186	2H
C3075	1H	C3384	3I	C3592	4I	C3813	5B	CR3014	1B	CR3443	3E	CR3936	6D			Q3225	2C	Q3655	5F	R3032	2C	R3116	1C	R3188	1H
C3091	1I	C3385	3I	C3597	4J	C3822	5C	CR3015	1B	CR3445	3E			P3505	4A	Q3235	2D	Q3675	4G	R3033	1D	R3117	2C	R3190	2I
C3095	2J	C3396	3I	C3611	4B	C3827	6C	CR3023	1C	CR3447	3E	J3001	1B	P3920	6C	Q3250	2E	Q3698	5J	R3035	1D	R3126	2C	R3202	2A
C3112	1B	C3398	3J	C3615	4B	C3832	5D	CR3024	1C	CR3529	4C	J3002	1B			Q3297	2J	Q3719	5C	R3042	1D	R3135	2D	R3205	2B
C3119	2C	C3405	3B	C3623	4C	C3846	6E	CR3034	1D	CR3541	4D	J3004	1B	Q3004	1B	Q3344	3E	Q3746	5E	R3052	2E	R3136	2D	R3206	2B
C3135	2D	C3422	3C	C3643	4D	C3848	6E	CR3193	2I	CR3543	4D	J3101	2A	Q3028	1C	Q3346	3E	Q3812	5B	R3055	1F	R3143	2D	R3207	2B
C3142	2D	C3423	3C	C3647	5E	C3854	5E	CR3263	2F	CR3545	4E	J3224	2C	Q3038	1D	Q3355	3F	Q3833	6D	R3064	1G	R3144	2E	R3208	2B
C3144	2D	C3462	3F	C3682	4H	C3885	5I	CR3264	3F	CR3547	4E	J3320	3C	Q3045	1E	Q3375	3G	Q3845	5E	R3072	2G	R3147	2E	R3216	2C
C3152	2E	C3464	3F	C3683	4H	C3886	5I	CR3298	2J	CR3693	4I	J3802	5A	Q3062	1F	Q3426	3D	Q3855	5F	R3081	1H	R3148	2E	R3232	2D
C3173	1G	C3466	3G	C3690	4I	C3894	6I	CR3312	3B	CR3727	5C	J3901	6A	Q3118	2B	Q3428	3D	Q3875	5G	R3082	1H	R3152	2E	R3233	2D
C3192	2I	C3502	4A	C3714	5B	C3896	6J	CR3327	3C	CR3763	5F	J3902	6A	Q3125	2C	Q3555	3F	Q3938	6E	R3087	1I	R3159	2F	R3234	2D
C3287	2I	C3517	4B	C3723	5C	C3911	6B	CR3432	3D			J3926	6C	Q3145	2E	Q3617	4C	Q3948	6E	R3095	2J	R3168	2G	R3242	2D

CKT NO	GRID LOC	CKT NO	GRID LOC	CKT NO	GRID LOC
R3243	2D	R3624	4C	R3944	6E
R3244	2D	R3625	4C	R3946	6E
R3246	2E	R3626	4C	R3952	6E
R3247	2E	R3632	4D	R3956	6F
R3252	2E	R3634	4D	R3958	6F
R3253	2E	R3645	5E	R3975	6G
R3254	2E	R3647	4E	R3981	6H
R3256	2F	R3661	5F	R3983	6H
R3258	2F	R3683	4H	R3986	6I
R3274	2G	R3684	4H	R3987	6I
R3275	2G	R3685	4I	R3988	6I
R3276	2H	R3687	5H	R3989	6I
R3278	2H	R3695	4I		
R3285	2H	R3712	5B	RT3267	2G
R3296	2I	R3714	5B	RT3767	5G
R3299	2J	R3716	5B		
R3311	2B	R3724	5C	S3414	3B
R3314	3B	R3725	5C	S3995	6J
R3326	2C	R3735	5D		
R3328	3C	R3742	5E	TP3319	3C
R3333	3D	R3744	5E	TP3519	4C
R3334	3D	R3752	5E		
R3335	3D	R3753	5E	U3290	2I
R3353	3E	R3754	5E	U3605	4B
R3358	3F	R3756	5F	U3705	5B
R3376	3G	R3758	5F	U3790	5I
R3382	2H	R3774	5G	U3805	5B
R3384	3I	R3775	5G	U3905	6B
R3385	3I	R3776	5G		
R3391	3I	R3782	5H	VR3096	2J
R3392	3I	R3794	5I	VR3356	3F
R3422	3C	R3798	5J	VR3597	4J
R3438	3D	R3815	5B	VR3662	5F
R3439	3D	R3816	5C	VR3824	5C
R3448	3E	R3817	5C		
R3449	3E	R3825	5C	W3527	4C
R3482	3H	R3828	6C	W3732	5D
R3484	3H	R3834	5D		
R3486	3I	R3835	5D		
R3487	3I	R3838	5D		
R3488	3I	R3839	5D		
R3504	4A	R3842	5D		
R3514	4B	R3843	5D		
R3516	4B	R3849	5E		
R3521	3C	R3854	5E		
R3522	4C	R3858	6F		
R3532	4D	R3868	5G		
R3534	4D	R3876	6G		
R3536	4D	R3881	5H		
R3538	4D	R3882	6H		
R3548	4E	R3884	6H		
R3549	4E	R3885	5I		
R3558	4F	R3886	5I		
R3562	4F	R3889	5I		
R3579	4G	R3891	6I		
R3580	4H	R3893	6I		
R3582	4H	R3903	6A		
R3586	4I	R3904	6A		
R3587	4H	R3906	6A		
R3589	4I	R3914	6B		
R3590	4I	R3916	6C		
R3597	4J	R3922	6C		
R3612	4B	R3924	6C		
R3613	4B	R3932	6C		
R3616	4B	R3934	6D		
R3622	4C				

@

464—466
CONTROL SETTINGS

DC Voltages

VERT MODE	CH 1
AC-GND-DC(both)	GND

AC Waveforms

VERT MODE	CH 1
CH 1 AC-GND-DC	DC
VOLTS/DIV	5 mV
Input	20 mV positive-going squre wave

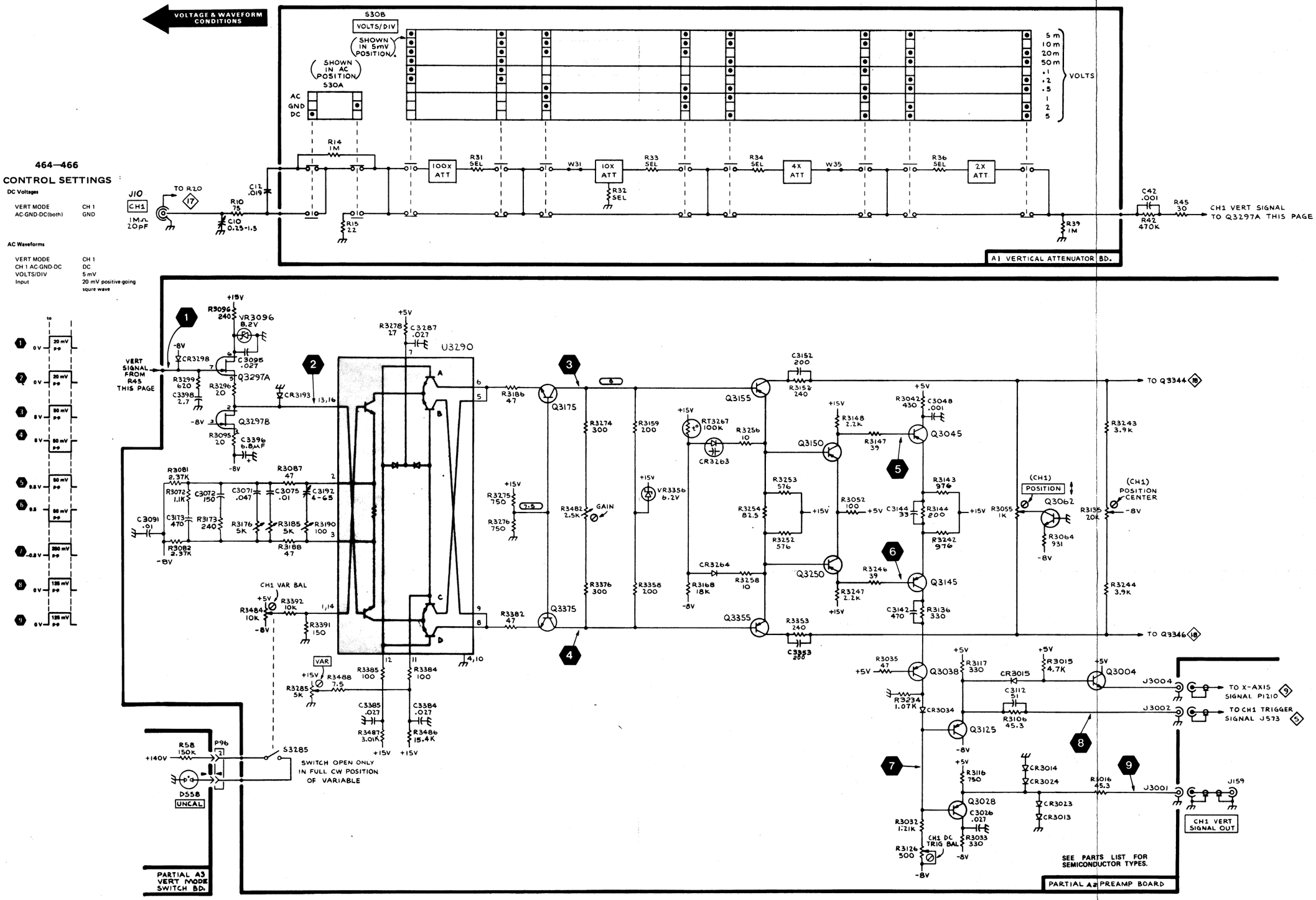

1753-111
@

CH1 VERTICAL PREAMP 15

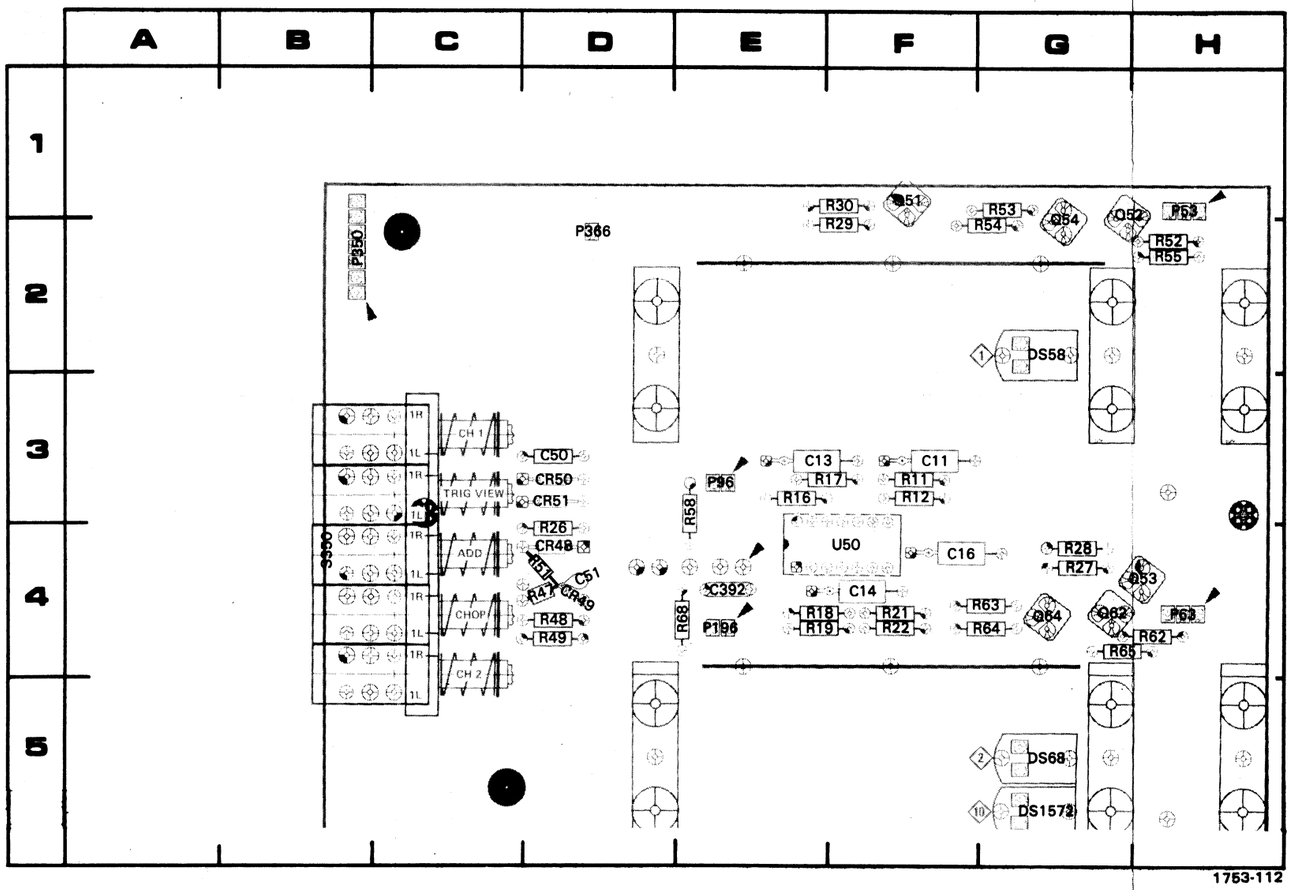

Figure Option 10-9. A3 Vertical Mode Switch board component locations.

CKT NO	GRID LOC	CKT NO	GRID LOC	CKT NO	GRID LOC
C11	3F	Q51	1F	R48	4D
C13	3E	Q52	1G	R49	4D
C14	4F	Q53	4H	R51	4D
C16	4F	Q54	2G	R52	2H
C50	3D	Q62	4G	R53	2G
C51	3D	Q64	4G	R54	2G
C392	4E			R55	2H
		R11	3F	R58	3E
CR48	4D	R12	3F	R62	4H
CR49	4D	R16	3E	R63	4G
CR50	3D	R17	3E	R64	4G
CR51	4D	R18	4E	R65	4G
		R19	4E	R68	4E
DS58	3G	R21	4F		
DS68	5G	R22	4F	S350	4B
DS1572	5G	R26	4D		
		R27	4G	U50	4E
P53	2H	R28	4G		
P63	4H	R29	2F		
P96	3E	R30	1F		
P196	4E	R47	4D		
P350	2B				
P366	2D				

@

464–466 CONTROL SETTINGS

DC Voltages

VERT MODE	CH 2
AC-GND-DC (both)	GND

AC Waveforms

VERT MODE	CH 2
CH 2 AC-GND-DC	DC
VOLTS/DIV	5 mV
Input	20 mV positive-going square wave

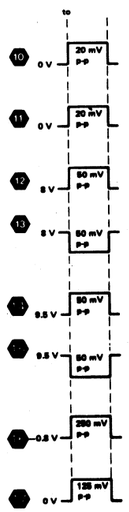

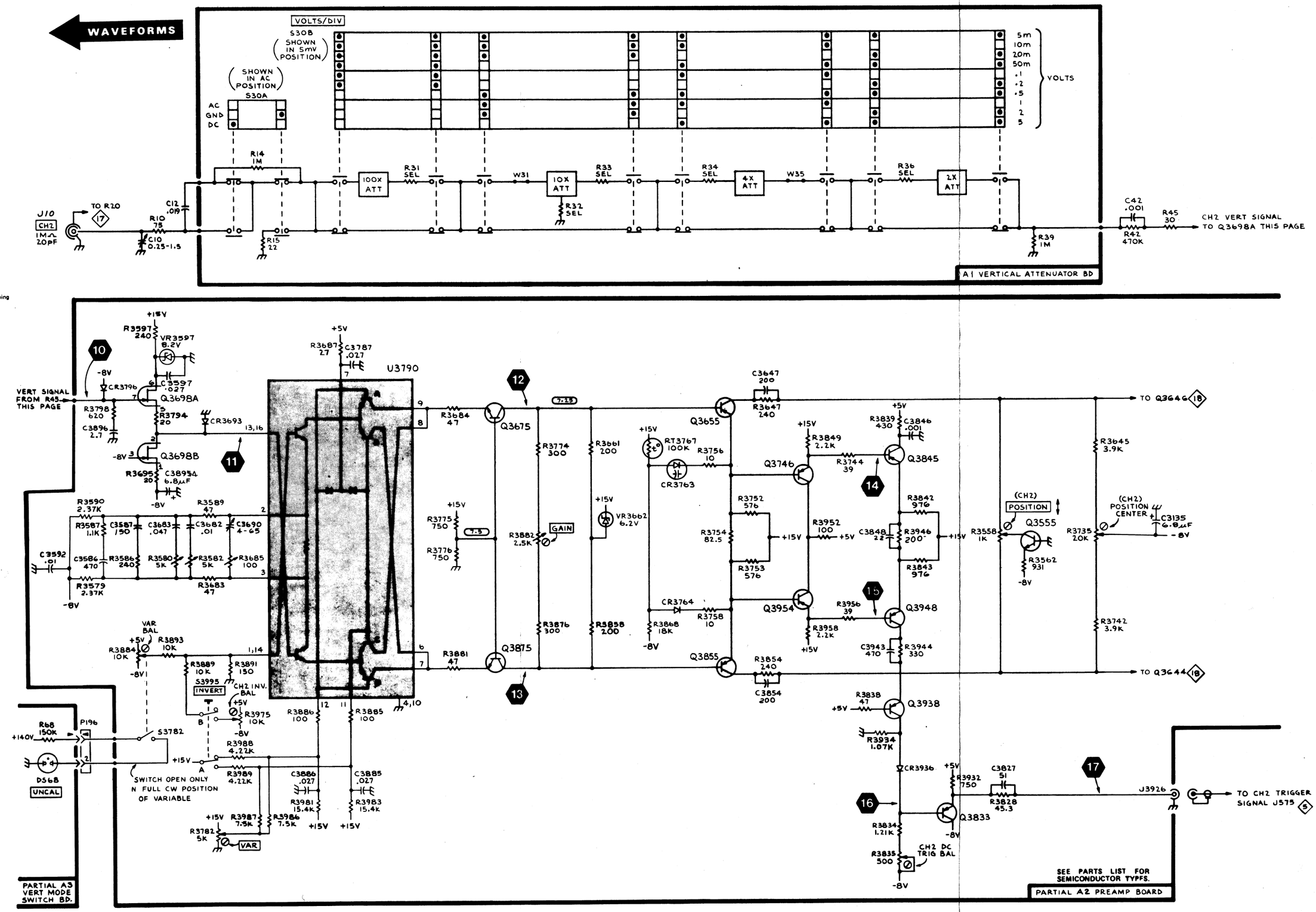

464/466 OPTION 10

1753-113
@

CH2 VERTICAL PREAMP 16

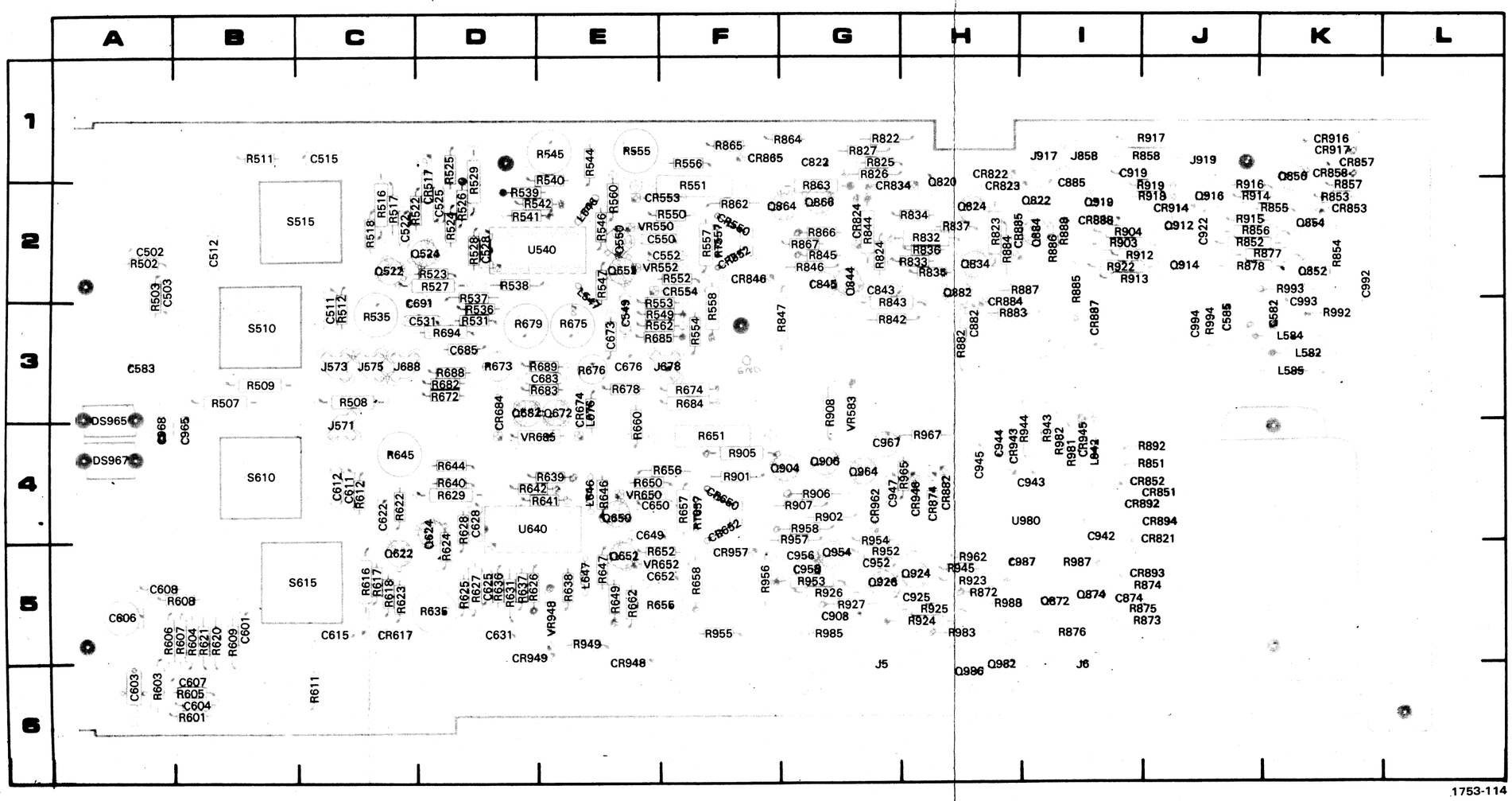

Figure Option 10-10. A5 Trigger Generator and Sweep Logic baord component locations.

CKT NO	GRID LOC	CKT NO	GRID LOC	CKT NO	GRID LOC	CKT NO	GRID LOC	CKT NO	GRID LOC	CKT NO	GRID LOC	CKT NO	GRID LOC	CKT NO	GRID LOC	CKT NO	GRID LOC	CKT NO	GRID LOC	CKT NO	GRID LOC	CKT NO	GRID LOC	CKT NO	GRID LOC	CKT NO	GRID LOC	CKT NO	GRID LOC
C502	2A	C601	5B	C673	3E	C943	4I	CR550	2F	CR852	4J	CR917	1K	J575	3C	Q522	2C	Q854	2K	Q954	5G	R523	2D	R544	1E	R601	6B	R623	5C
C503	2A	C603	6A	C676	3E	C944	4I	CR552	2F	CR853	2L	CR943	4I	J678	3F	Q524	2D	Q856	1K	Q964	4G	R524	2D	R545	1E	R603	6A	R624	5D
C511	2C	C604	6B	C683	3E	C945	4H	CR553	2F	CR857	1L	CR945	4I	J688	3C	Q550	2E	Q864	2G	Q982	6I	R525	1D	R546	2E	R604	5B	R625	5D
C512	2B	C606	5A	C685	3D	C947	4H	CR554	2F	CR858	1K	CR946	4H	J858	1I	Q552	2E	Q866	2G	Q986	6H	R526	2D	R547	2E	R605	6B	R626	5D
C515	1C	C607	6B	C691	2D	C952	5G	CR617	5C	CR865	1G	CR948	5E	J917	1I	Q622	5C	Q872	5I			R527	2D	R549	3F	R606	5A	R627	5D
C522	2C	C608	5A	C822	1G	C956	5G	CR650	4F	CR874	4H	CR949	5D	J919	1J	Q624	4D	Q874	5I	R502	2A	R528	2D	R550	2F	R607	5A	R628	4D
C525	2D	C611	4C	C843	2H	C958	5G	CR652	4F	CR882	4H	CR957	5F			Q650	4E	Q882	2I	R503	2A	R529	1D	R551	1F	R608	5A	R629	4D
C528	2D	C612	4C	C845	2G	C965	3A	CR674	3E	CR884	2I	CR962	4G	L546	2E	Q652	5E	Q884	2I	R507	3B	R531	2D	R552	2F	R609	5B	R631	5D
C531	2D	C615	5C	C874	5J	C967	4H	CR684	3D	CR885	2I			L547	2E	Q672	3E	Q904	4G	R508	3C	R535	2C	R553	2F	R611	6C	R635	5D
C549	2E	C622	4C	C882	3H	C968	3A	CR821	4J	CR887	2I	DS965	3A	L582	3K	Q682	3D	Q906	4G	R509	3B	R536	2D	R554	3F	R612	4C	R636	5D
C550	2F	C625	5D	C885	1I	C987	5I	CR822	1H	CR888	2I	DS967	4A	L584	3K	Q820	1H	Q912	2J	R511	1B	R537	2D	R555	1E	R616	5C	R637	5D
C552	2F	C628	4D	C908	5G	C992	2L	CR823	1H	CR892	4J			L585	3K	Q822	1I	Q914	2J	R512	2C	R538	2D	R556	1F	R617	5C	R638	5E
C582	3K	C631	5D	C919	1J	C993	2K	CR824	2G	CR893	5J	J5	6G	L646	4E	Q824	2H	Q916	1J	R516	2C	R539	1E	R557	2F	R618	5C	R639	4E
C583	3A	C649	4F	C922	2J	C994	3J	CR834	1H	CR894	4J	J6	6I	L647	5E	Q834	2H	Q919	2I	R517	2C	R540	1E	R558	3F	R620	5B	R640	4D
C584	3K	C650	4F	C925	5H			CR846	2F	CR914	2J	J571	3C	L676	2L	Q844	2G	Q924	5H	R518	2C	R541	2E	R560	2E	R621	5B	R641	4E
C585	3K	C652	5F	C942	4I	CR517	1D	CR851	4J	CR916	1K	J573	3C	L942	4I	Q852	2K	Q926	5G	R522	2C	R542	2E	R562	3F	R622	4C	R642	4E

@

CKT NO	GRID LOC	CKT NO	GRID LOC	CKT NO	GRID LOC
R644	4D	R877	2K	U540	2E
R645	4C	R878	2K	U640	4E
R646	4E	R882	3H	U980	4I
R647	5E	R883	2I		
R649	5E	R884	2I	VR550	2F
R650	4F	R885	2I	VR552	2F
R651	4F	R886	2I	VR583	3G
R652	5F	R887	2I	VR650	4F
R655	5F	R888	2I	VR652	5F
R656	4F	R892	4J	VR685	4E
R657	4F	R901	4F	VR948	5E
R658	5F	R902	4G	VR987	4I
R660	3E	R903	2J		
R662	5E	R904	2J		
R672	3D	R905	4F		
R673	3D	R906	4G		
R674	3F	R907	4G		
R675	2E	R908	3G		
R676	2L	R912	2J		
R678	3E	R913	2J		
R679	2E	R914	1K		
R682	3D	R915	2K		
R683	3E	R916	1K		
R684	3F	R917	1J		
R685	3F	R918	1J		
R688	3D	R919	1J		
R689	3E	R922	2J		
R694	3D	R923	5H		
R822	1G	R924	5H		
R823	2H	R925	5H		
R824	2G	R926	5G		
R825	1G	R927	5G		
R826	1G	R943	4I		
R827	1G	R944	4I		
R832	2H	R945	5H		
R833	2H	R949	5E		
R834	2H	R952	5G		
R835	2H	R953	5G		
R836	2H	R954	4G		
R837	2H	R955	5F		
R842	3H	R956	5G		
R843	2H	R957	4G		
R844	2G	R958	4G		
R845	2G	R962	5H		
R846	2G	R965	4H		
R847	3G	R967	4H		
R851	4J	R981	4I		
R852	2K	R982	4I		
R853	1K	R983	5H		
R854	2K	R985	5G		
R855	2K	R987	5I		
R856	2K	R988	5I		
R857	1K	R992	2K		
R858	1J	R993	2K		
R862	2F	R994	3J		
R863	1G				
R864	1G	RT557	2F		
R865	1F	RT657	4F		
R866	2G				
R867	2G	S510	3B		
R872	5H	S515	2C		
R873	5J	S610	4B		
R874	5J	S615	5B		
R875	5J				
R876	5I				

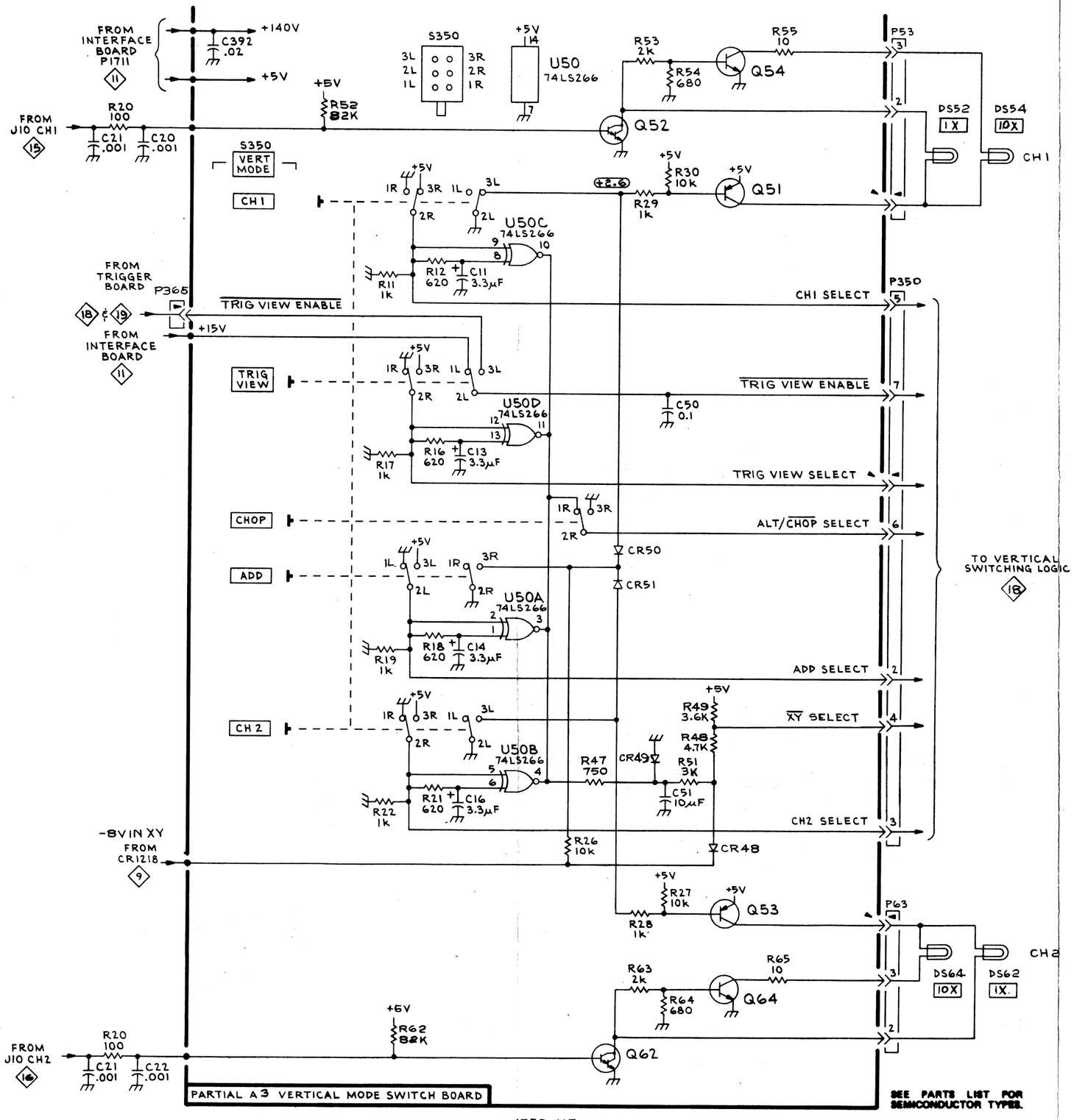

464/466 OPTION 10

1753-115
@

VERTICAL MODE SWITCH 17

WAVEFORM CONDITIONS 18

NOTE

The waveforms shown here were displayed on a Tektronix 466 Oscilloscope.

Control Settings of Instrument Under Test

Vert Mode	
Channel 1	Pressed in
Add	Pressed in
Chop	Pressed in
Time/Div	1 μs
Trigger	
Mode	AUTO
Source	EXT ÷ 10[1]

[1] For waveform 24, a 3 MHz sine wave of 4 V p-p was applied to the external input connector.

Control Settings of Test Oscilloscope

Vert Mode	
Channel 1	Pressed in
Alternate	Pressed in
Channel 2	Pressed in
BW Limit	Pressed in
Volts/Div	
Channel 1	5
Channel 2	5
Time/Div	0.5 μs
Trigger	A
Coupling	AC
Source	EXT ÷ 10 (Connected to TP18)

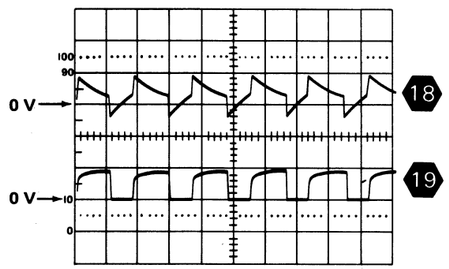

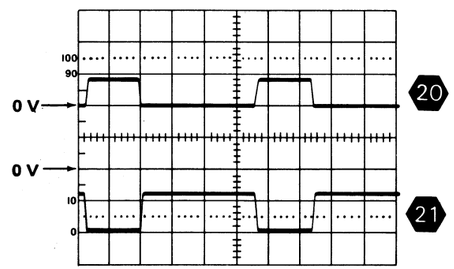

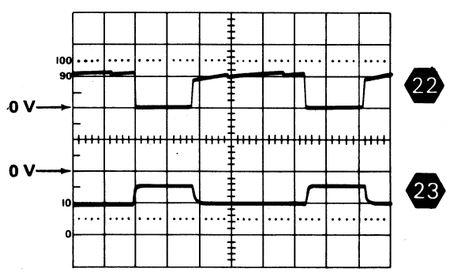

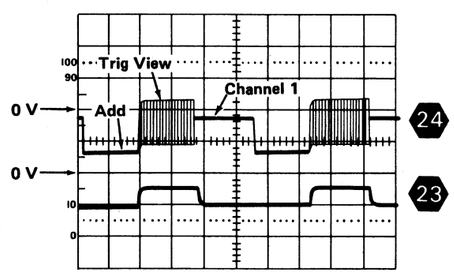

Trigger View pressed in.
With signal applied.[1]

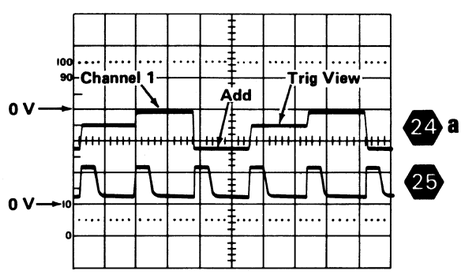

Trigger View pressed in.
No signal applied to external input.

@

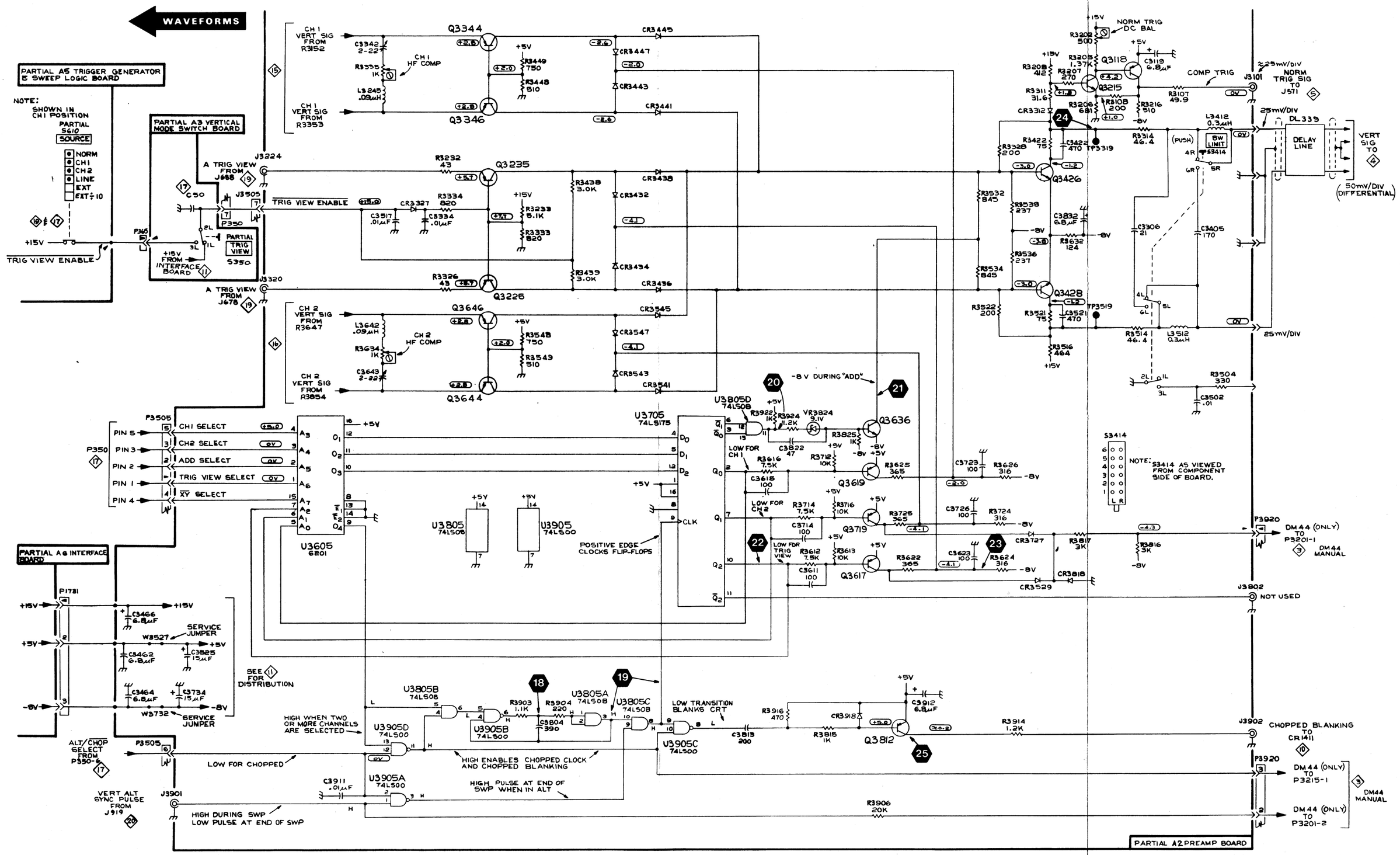

464/466 OPTION 10

1753-116

VERTICAL SWITCHING LOGIC 18

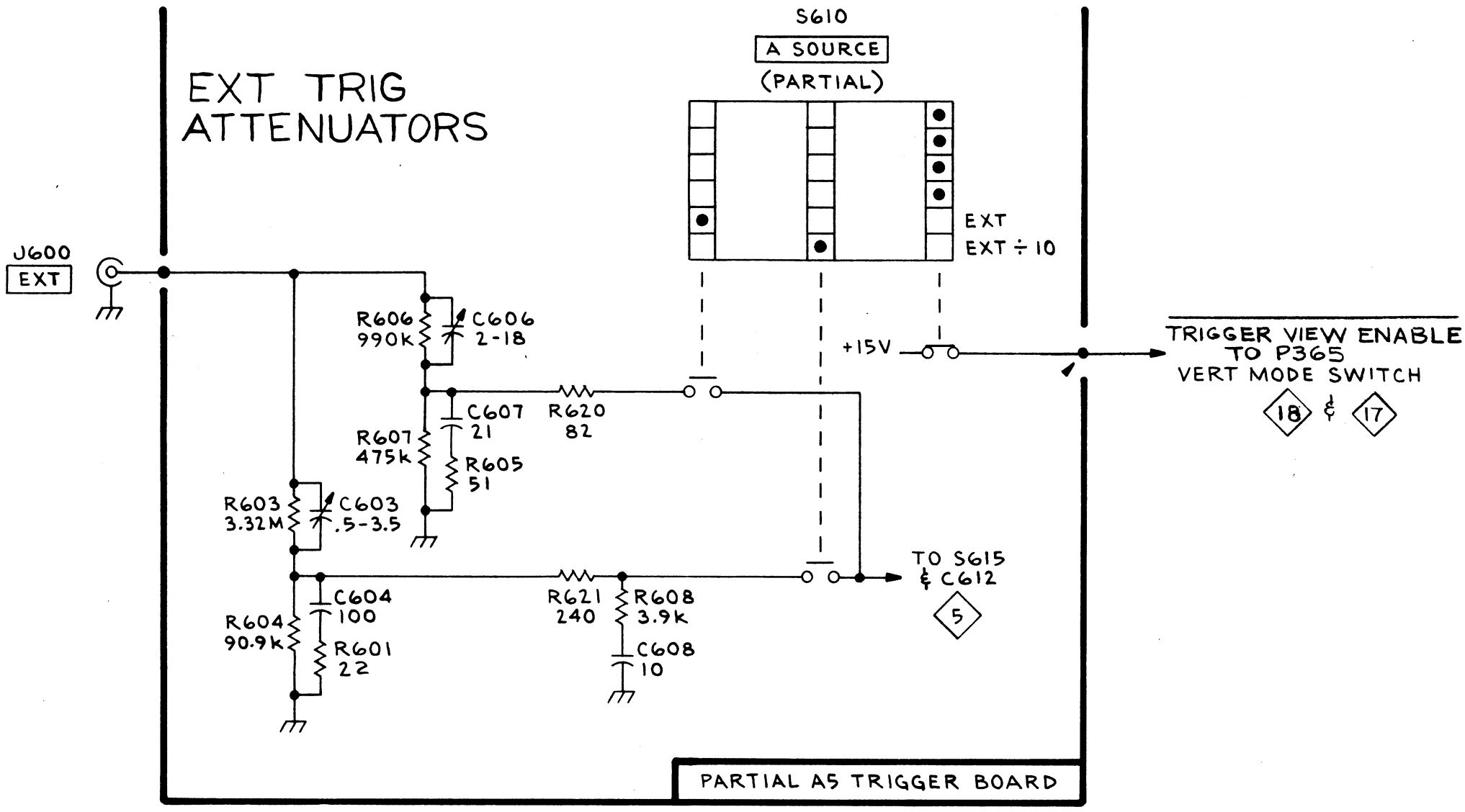

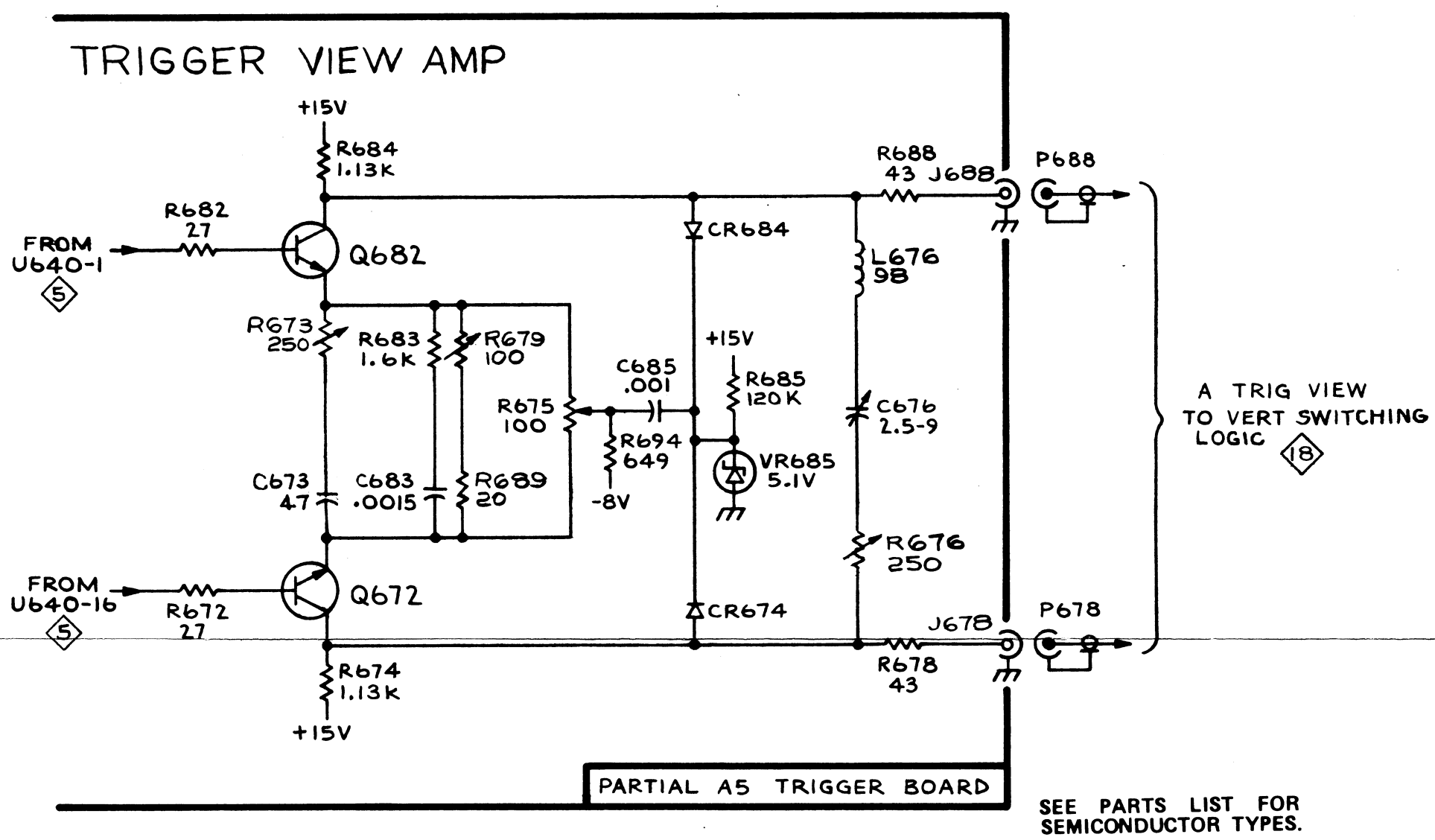

SEE PARTS LIST FOR SEMICONDUCTOR TYPES.

464/466 OPTION 10

1753-117 @

A & B TRIGGER GENERATOR

19

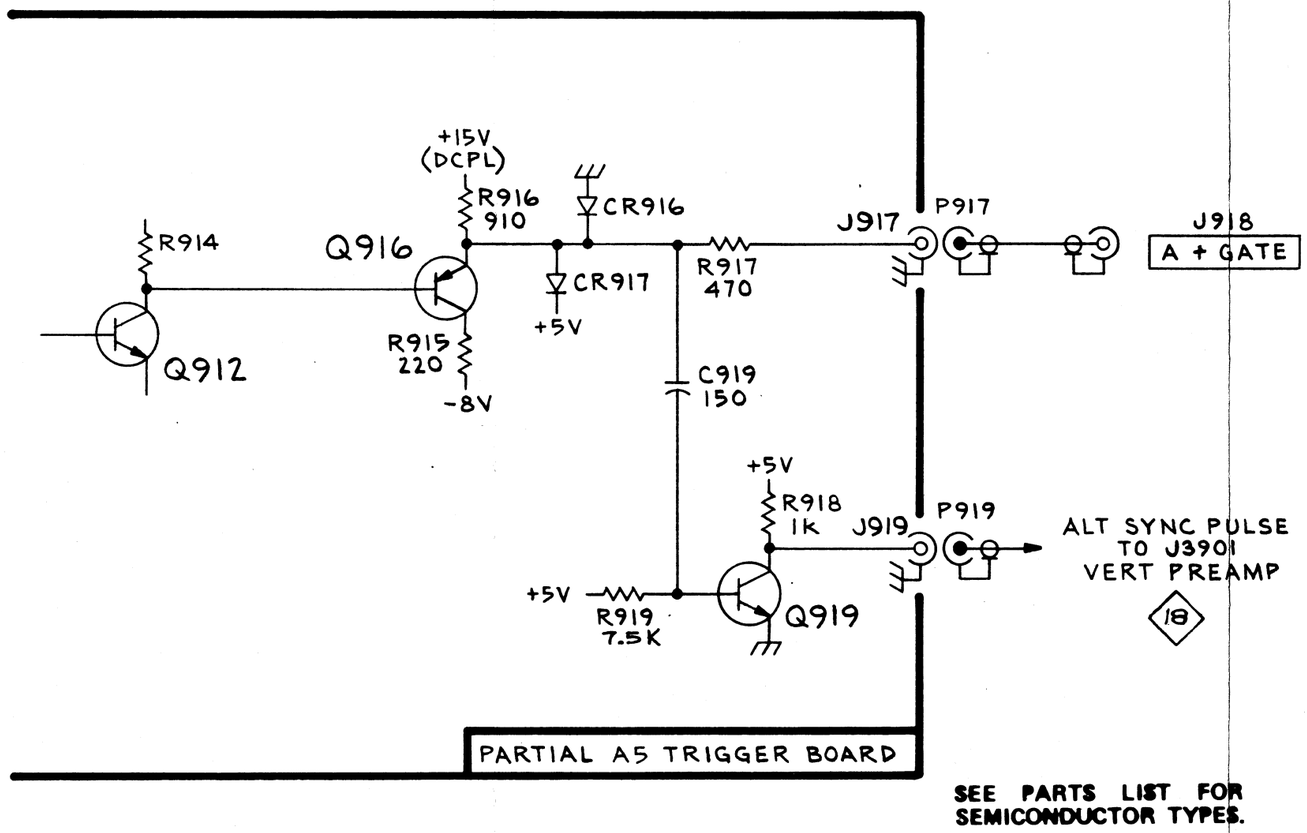

SEE PARTS LIST FOR SEMICONDUCTOR TYPES.

464/466 OPTION 10

1753-118
@

SWEEP & Z AXIS LOGIC 20

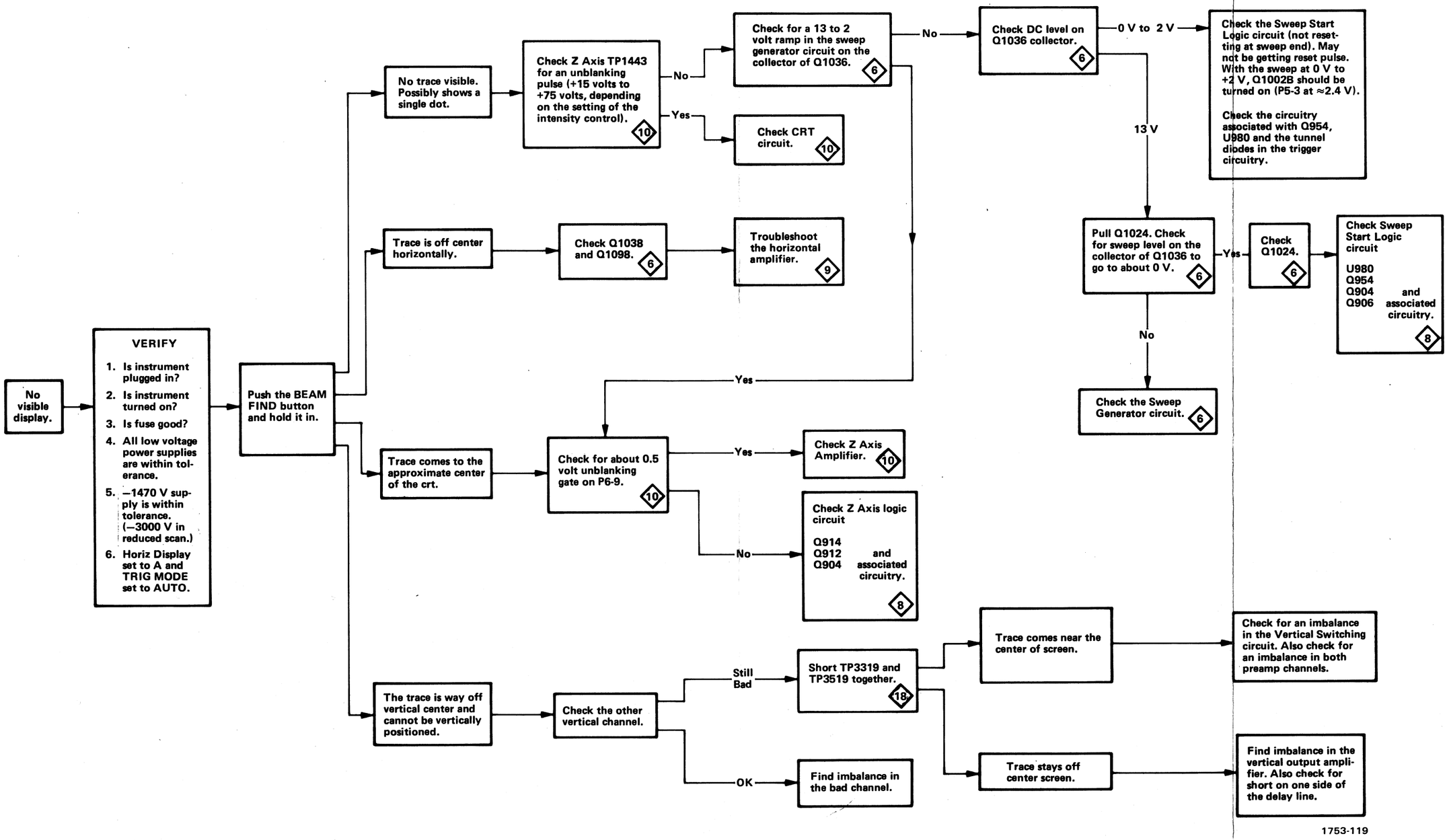

Figure Option 10-11. No visible display troubleshooting.

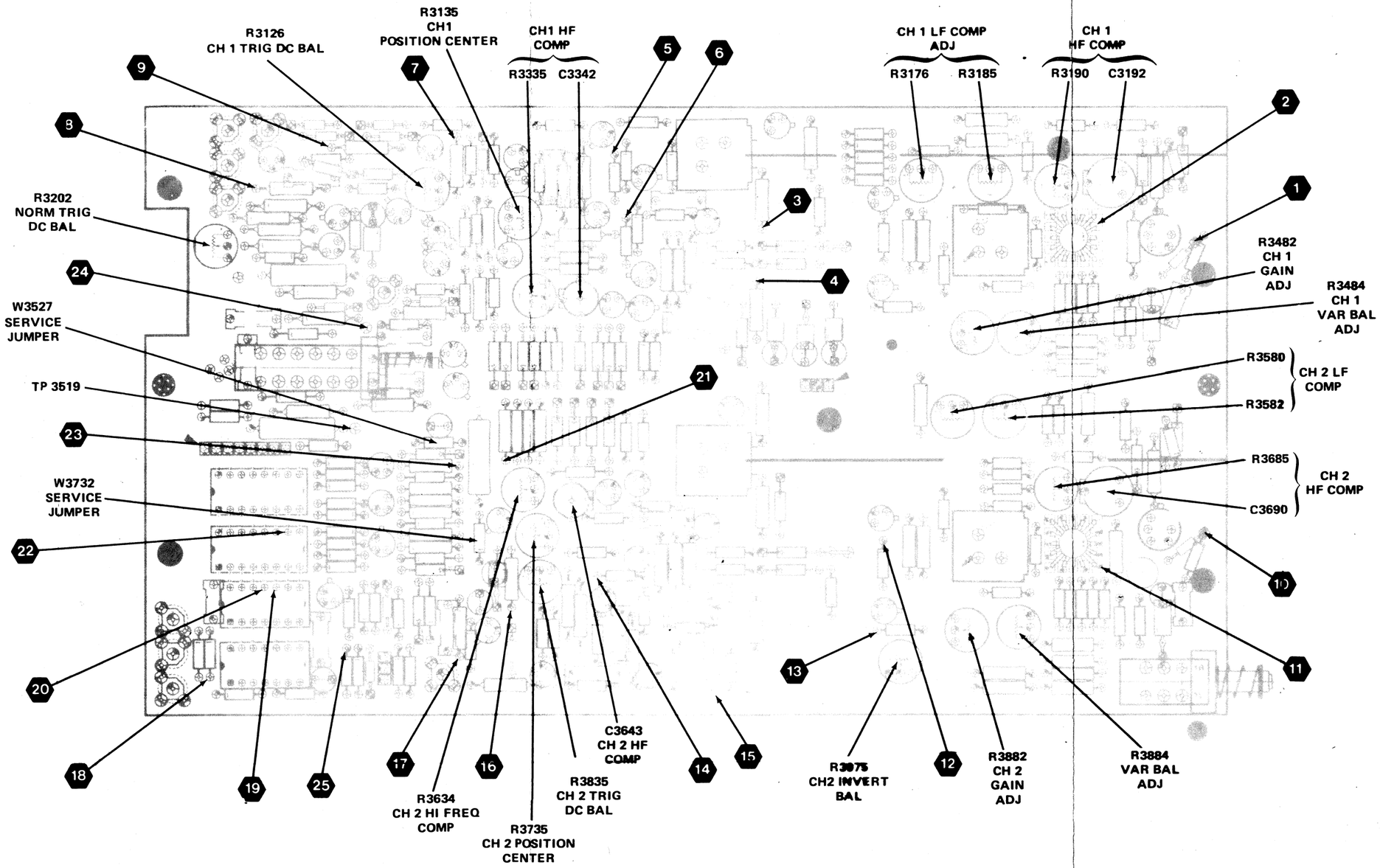

Figure Option 10-12. Adjustment locations and test points on option 10 A2 Vertical Preamplifier board.

1753-120

MANUAL CHANGE INFORMATION

At Tektronix, we continually strive to keep up with latest electronic developments by adding circuit and component improvements to our instruments as soon as they are developed and tested.

Sometimes, due to printing and shipping requirements, we can't get these changes immediately into printed manuals. Hence, your manual may contain new change information on following pages.

A single change may affect several sections. Since the change information sheets are carried in the manual until all changes are permanently entered, some duplication may occur. If no such change pages appear following this page, your manual is correct as printed.

SERVICE NOTE

Because of the universal parts procurement problem, some electrical parts in your instrument may be different from those described in the Replaceable Electrical Parts List. The parts used will in no way alter or compromise the performance or reliability of this instrument. They are installed when necessary to ensure prompt delivery to the customer. Order replacement parts from the Replaceable Electrical Parts List.

CALIBRATION TEST EQUIPMENT REPLACEMENT

Calibration Test Equipment Chart

This chart compares TM 500 product performance to that of older Tektronix equipment. Only those characteristics where significant specification differences occur, are listed. In some cases the new instrument may not be a total functional replacement. Additional support instrumentation may be needed or a change in calibration procedure may be necessary.

Comparison of Main Characteristics

DM 501 replaces 7D13		
PG 501 replaces 107	PG 501 - Risetime less than 3.5 ns into 50 Ω.	107 - Risetime less than 3.0 ns into 50 Ω.
108	PG 501 - 5 V output pulse; 3.5 ns Risetime	108 - 10 V output pulse 1 ns Risetime
PG 502 replaces 107		
108	PG 502 - 5 V output	108 - 10 V output
111	PG 502 - Risetime less than 1 ns; 10 ns Pretrigger pulse delay	111 - Risetime 0.5 ns; 30 to 250 ns Pretrigger pulse delay
PG 508 replaces 114	Performance of replacement equipment is the same or better than equipment being replaced.	
115		
2101		
PG 506 replaces 106	PG 506 - Positive-going trigger output signal at least 1 V; High Amplitude output, 60 V.	106 - Positive and Negative-going trigger output signal, 50 ns and 1 V; High Amplitude output, 100 V.
067-0502-01	PG 506 - Does not have chopped feature.	0502-01 - Comparator output can be alternately chopped to a reference voltage.
SG 503 replaces 190, 190A, 190B	SG 503 - Amplitude range 5 mV to 5.5 V p-p.	190B - Amplitude range 40 mV to 10 V p-p.
191		
067-0532-01	SG 503 - Frequency range 250 kHz to 250 MHz.	0532-01 - Frequency range 65 MHz to 500 MHz.
SG 504 replaces 067-0532-01	SG 504 - Frequency range 245 MHz to 1050 MHz.	0532-01 - Frequency range 65 MHz to 500 MHz.
067-0650-00		
TG 501 replaces 180, 180A	TG 501 - Trigger output-slaved to marker output from 5 sec through 100 ns. One time-mark can be generated at a time.	180A - Trigger pulses 1, 10, 100 Hz; 1, 10, and 100 kHz. Multiple time-marks can be generated simultaneously.
181		181 - Multiple time-marks
184	TG 501 - Trigger output-slaved to market output from 5 sec through 100 ns. One time-mark can be generated at a time.	184 - Separate trigger pulses of 1 and 0.1 sec; 10, 1, and 0.1 ms; 10 and 1 μs.
2901	TG 501 - Trigger output-slaved to marker output from 5 sec through 100 ns. One time-mark can be generated at a time.	2901 - Separate trigger pulses, from 5 sec to 0.1 μs. Multiple time-marks can be generated simultaneously.

NOTE: All TM 500 generator outputs are short-proof. All TM 500 plug-in instruments require TM 500-Series Power Module.

Tektronix®
COMMITTED TO EXCELLENCE

MANUAL CHANGE INFORMATION

Change Reference: C1/679 Date: 6-1-79

Product: 464 AND 466 OPTION 10 SERVICE SUPPLEMENT 061-2172-00

CHANGE	DESCRIPTION

EFF ALL SN OF OPTION 10

ELECTRICAL PARTS LIST AND SCHEMATIC CHANGES

			REF
ADD:			
CR1216	152-0141-02	SEMICOND DEVICE:SILICON,30V,150MA,1N4152	PC 1
R3915	315-0103-00	RES.,FXD,CMPSN:10K OHM,5%,0.25W	PC 3

R3915 is located on the A2 VERTICAL PREAMP board and is added at grid location 6B just left of R3914 in Figure Option 10-8. R3915 is added from the collector of Q3812 to ground; see VERTICAL SWITCHING LOGIC diagram 18. CR1216 is added to the A6 INTERFACE board with anode connected to pin 1 of P1210 and cathode to junction of R1212-R1215. See HORIZONTAL AMPLIFIER diagram 9 in 464 or 466 Service manual.

R3915 affects page 36 and CR1216 affects page 39 parts list pages of this manual.

Tektronix®
COMMITTED TO EXCELLENCE

MANUAL CHANGE INFORMATION

Date: 7-2-79 Change Reference: C2/779

Product: 464 AND 466 OPTION 10 Manual Part No.: 061-2172-00

DESCRIPTION

EFF ALL SN

ELECTRICAL PARTS LIST AND SCHEMATIC CHANGES

CHANGE TO:			REF
A1	670-3254-02	CKT BOARD ASSY:ATTENUATOR (CH 1 & CH 2)	PC 7
C603	281-0214-00	CAP.,VAR, CER DI:0.5-3PF, 400V	PC 5
R31	317-0150-00	RES.,FXD,CMPSN:15 OHM,(NOMINAL VALUE) SEL	PC 7
REMOVE:			
C3048	281-0812-00	CAP.FXD,CER DI:1000PF,10%,100V	PC 5

C603 is located on the A5 TRIGGER board and is shown on A & B TRIGGER GENERATOR diagram 19. R31 is located on the CH 1 and CH 2 A1 VERTICAL ATTENUATOR boards and is shown on CH 1 VERTICAL PREAMP diagram 15 and CH 2 VERTICAL PREAMP diagram 16. C3048 is removed from the A2 VERTICAL PREAMP board and affects Figure Option 10-8 and CH 1 VERTICAL PREAMP diagram 15.

Tektronix
COMMITTED TO EXCELLENCE

MANUAL CHANGE INFORMATION

Date: 10-31-79 Change Reference: M38705

Product: 464 and 466 Option 10 Manual Part No.: 061-2172-00

DESCRIPTION

464 EFF SN B144655

466 EFF SN B149102

ELECTRICAL PARTS LIST AND SCHEMATIC CHANGES

CHANGE TO:

A2	670-6301-01	CKT BOARD ASSY:VERTICAL PREAMP
R3081	321-0641-00	RES.,FXD,FILM:1.8K OHM,1%,0.125W
R3082	321-0641-00	RES.,FXD,FILM:1.8K OHM,1%,0.125W
R3579	321-0641-00	RES.,FXD,FILM:1.8K OHM,1%,0.125W
R3590	321-0641-00	RES.,FXD,FILM:1.8K OHM,1%,0.125W

R3081, R3082, R3579 and R3590 are located on the A2 VERTICAL PREAMP CIRCUIT BOARD. R3081 and R3082 are shown on CH 1 VERTICAL PREAMP diagram 15. R3579 and R3590 are shown on CH 2 VERTICAL PREAMP diagram 16.

Tektronix®
COMMITTED TO EXCELLENCE

MANUAL CHANGE INFORMATION

Date: 11-30-79 Change Reference: M38895

Product: 464 and 466 OPTION 10 SERVICE SUPPLEMENT Manual Part No.: 061-2172-00

DESCRIPTION

EFF SN 464: B144706

EFF SN 466: B149275

ELECTRICAL PARTS LIST AND SCHEMATIC CHANGES

CHANGE TO:

A2	670-6301-02	CKT BOARD ASSY:VERTICAL PREAMP

ADD:

C3906	281-0814-00	CAP.,FXD,CER DI:100PF,10%,100V

C3906 is added in parallel with R3906 on the A2 VERTICAL PREAMP board and affects VERTICAL SWITCHING LOGIC diagram 18.

Tektronix®
COMMITTED TO EXCELLENCE

MANUAL CHANGE INFORMATION

Date: 1-8-80 Change Reference: M37767

Product: 464 and 466 OPTION 10 Manual Part No.: 061-2172-00

DESCRIPTION

464 OPTION 10 EFF SN B144755

466 OPTION 10 EFF SN B149444

ELECTRICAL PARTS LIST CHANGES

A6	670-2805-19	CKT BOARD ASSEMBLY:INTERFACE (466 OPTION 10)
A6	670-2805-20	CKT BOARD ASSEMBLY:INTERFACE (464 OPTION 10)

M37767 changes CR1263, CR1264, CR1412 and R1716 on the A6 board. Refer to the 464 or 466 Service manual for details concerning these components.

Tektronix®
COMMITTED TO EXCELLENCE

MANUAL CHANGE INFORMATION

Date: 8-8-80 Change Reference: M40654

Product: 464 and 466 OPTION 10 SERVICE SUPPLEMENT Manual Part No.: 061-2172-00

DESCRIPTION

464 OPTION 10, EFF SN: B145328

466 OPTION 10, EFF SN: B150755

ELECTRICAL PARTS LIST DIFFERENCES BETWEEN INSTRUMENT EQUIPPED WITH OPTION 10 AND STANDARD INSTRUMENT

CHANGE TO:

A4	670-2811-04	CKT BOARD ASSY:VERTICAL OUTPUT