TEKTRONIX®

1350
MEMORY DISPLAY UNIT

INSTRUCTION MANUAL

Tektronix, Inc.
P.O. Box 500
Beaverton, Oregon 97077

Serial Number _____

First Printing APR 1975

070-1888-00

WARRANTY

All TEKTRONIX instruments are warranted against defective materials and workmanship for one year. Any questions with respect to the warranty should be taken up with your TEKTRONIX Field Engineer or representative.

All requests for repairs and replacement parts should be directed to the TEKTRONIX Field Office or representative in your area. This will assure you the fastest possible service. Please include the instrument Type Number or Part Number and Serial Number with all requests for parts or service.

Specifications and price change privileges reserved.

U.S.A. and foreign Tektronix products covered by U.S. and foreign patents and/or patents pending.

TABLE OF CONTENTS


LOAD
READ
MANUAL
AUTO
HOLD
REFRESHED
AFTER LOAD
MANUAL
ERASE DISPLAY
MEMORY
POWER
ON
OFF
1350 MEMORY DISPLAY UNIT
(FOR R7912)

1888-01

@

SECTION 1

CHARACTERISTICS

Specifications

The electrical specifications listed in the Performance Requirement column are valid over the stated range for instruments calibrated at an ambient temperature of +20°C to +30°C and after a five minute warm-up. The electrical specifications listed in the Supplemental Information column indicate typical instrument operation and is not intended to be construed as a requirement for instrument operation.

ELECTRICAL SPECIFICATIONS

CHARACTERISTICS	PERFORMANCE REQUIREMENTS	SUPPLEMENTAL INFORMATION
POWER REQUIREMENTS		
Line Voltage	117/234 VAC	Line Voltage range AC, RMS (selected by line selector assembly on rear panel).
115 volts nominal	90 to 136 volts	
230 volts nominal	180 to 272 volts	
Line Frequency	50 to 400 Hz	
Maximum Power Consumption	20 watts, 0.19 amperes at 60 hertz, at nominal line voltage	

OPERATIONAL SPECIFICATIONS

Voltage Range	Standard TTL	Low: 0-0.2V High: 2.4-5V
Input Impedance		
DC	Greater than 5000 Ω	
AC Line Termination		Approximately 120 Ω
Analog Output		
Resolution	1 pair in 512 (9 bits)	
Digital to Analog		
Converter Accuracy	±0.0015% of full scale ± ½LSB	At 23°C
Temperature Coefficient	60 PPM/°C	
Linearity	0.2% of full scale	
Buffer Amplifier		
Response		Settle to 1% of final value of full scale step in less than 1 μs into 100 pF load.
Output Impedance		
X-Out	2.5 kΩ ± 10%	
Y-Out	500 Ω ± 10%	
Z-Out	750 Ω ± 10%	
Adjustment Range		
X-Out & Y-Out	± 5% from nominal value	Z-Out fixed
Output Rate		
To Refresh Monitor	75 KHz ± 10%	
To Storage Monitor	7.5 KHz ± 10%	

@

PHYSICAL SPECIFICATIONS

DIMENSIONS

CHARACTERISTICS	DESCRIPTIONS
Cabinet Style	
Height	6.00 inches (15.25 centimeters)
Width	8.50 inches (21.50 centimeters)
Length	20.00 incnes (50.80 centimeters)
Rackmount Style	
Height	5.25 inches (13.25 centimeters)
Width	8.50 inches (21.50 centimeters)
Length	19.00 inches (48.25 centimeters)

SECTION 2

OPERATING INSTRUCTIONS

The 1350 Memory Display Unit is a Digital Display Controller for the R7912 Transient Digitizer. The 1350 provides all the controls necessary to load the R7912 memory. It can then read data from the R7912 memory and convert it to x-y analog data for driving non-raster displays. The display device can be a storage monitor or an x-y monitor that displays the analog information in a refreshed mode; the display is flicker-free for most waveforms.

The 1350 is compatible with the Tektronix 601, 603, 605, 611, and 613 storage monitors and the Tektronix 602 and 604 display monitors. These monitors can be connected to the 1350 through J60, a 25 pin connector on the rear panel for interactive control. Three BNC connectors provide x, y, and z signals for other display monitors.

NOTE

The X and Y gain, of the 1350, is set to +1V and -1V respectively at the factory. If the CRT display and the CRT viewing area of the monitor do not coincide, the X and Y gains of the 1350 may be adjusted slightly to compensate for the difference. Refer to the Adjustment Procedure Section for the location of these adjustments.

ASCII Data

The 1350 MDU is not designed to decode ASCII characters. A

R7912 equipped with ASCII Converter Option 20 can be used if the ASCII Converter is disabled. Disabling the ASCII Converter requires only that J60 be disconnected from P60 (located near the front of the Interface card). If the ASCII Converter is not disabled, a small gap will appear on the displayed data.

Controls

The 1350 has two operating modes; the Memory Load mode and the Memory Read mode. The control buttons for the Memory Load mode are the Manual, Auto, and Hold buttons. For the Memory Read mode there are the Refreshed, After Load, and Manual buttons. The unit also has an Erase Display button. Following is a brief description of each of these controls.

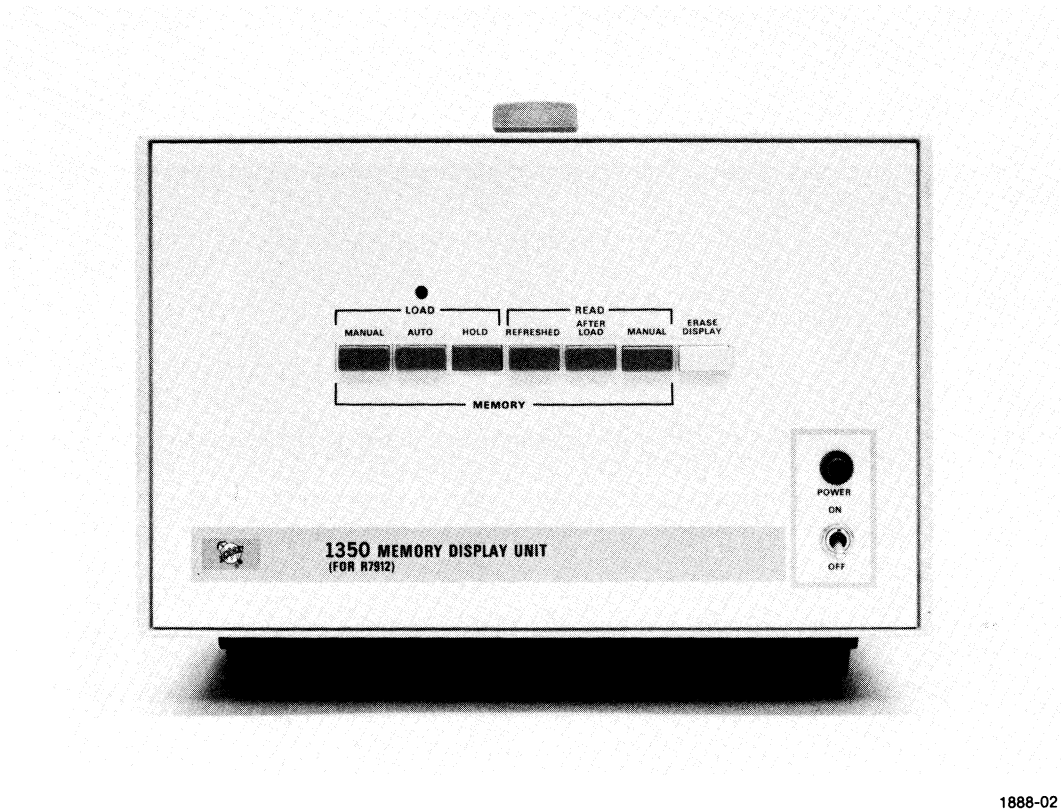

1888-02

Fig. 2-1. 1350 Memory Display Unit Front Panel Controls.

@

POWER	Controls power to the instrument.
LOAD	
MANUAL	Stores the waveform into the R7912's memory. This mode is used for storing repetitive waveforms.
AUTO	Sets the R7912 memory so that each signal transient or successive waveform will be stored automatically. The cycle time, load and read, requires approximately 100 ms; any waveforms (other than the one being stored) that occurs during this time may be missed.
HOLD	Causes the R7912 to hold the waveform presently displayed.
READ	
REFRESHED	Reads the memory continuously so that a signal is continuously displayed on a storage monitor. Continuous readout will be interrupted when a load cycle is performed.
AFTER LOAD	Allows the R7912 memory to be read and create an output of the waveform to a storage monitor. This is done at a slower rate to allow for the slew rate of the storage monitor. This process is repeated after the load of each waveform.

MANUAL	Causes a one time read of the R7912 memory and an output of the waveform to a storage monitor.
ERASE DISPLAY	Erases the display on the storage monitor when connected via J60.

Connectors

X, Y, Z and Erase signals are available on the OUTPUT connector (J60, 25-pin) located on the rear panel of the 1350. Table 2-1 shows the pin assignments for this connector.

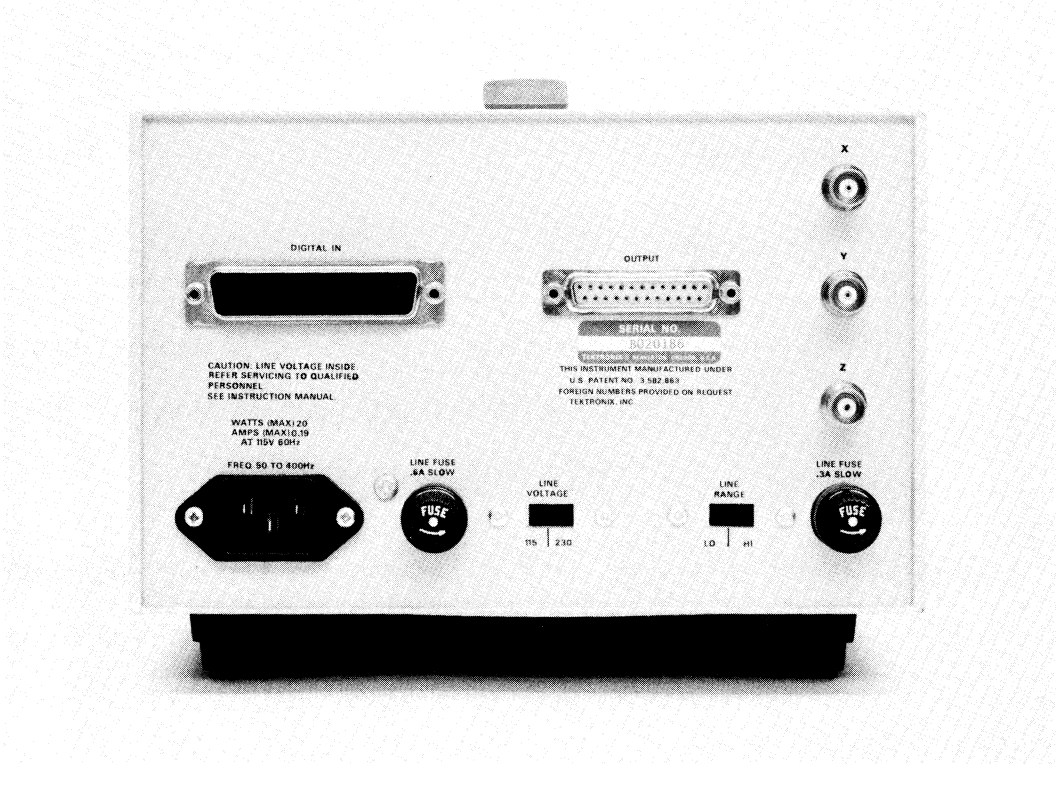

1888-03

Fig. 2-2. 1350 Memory Display Unit Rear Panel Connectors.

@

TABLE 2-1

J60 PIN ASSIGNMENTS

PIN NUMBER	SIGNAL
1	X AXIS
2	GROUND X AXIS
3	GROUND Y AXIS
4	Z AXIS
5	GROUND Z AXIS
14	GROUND X AXIS
15	Y AXIS
16	BROUND Y AXIS
17	BROUND Z AXIS
18	ERASE

X, Y, and Z signals are also available on the three BNC connectors located on the rear panel.

Signal information is supplied to the 1350 by the R7912 through the DIGITAL IN connector (J50, 104-pin) located on the rear panel. Table 2-2 shows the pin assignments for this connector.

TABLE 2-2

J50 PIN ASSIGNMENTS

PIN NO.	SIGNAL	PIN NO.	SIGNAL
1	DATA 0 COM.	29	DATA 6 BIT
2	DATA 1 COM.	30	DATA 7 BIT
3	DATA 2 COM.	31	DATA 8 BIT
4	DATA 3 COM.	32	DATA 9 BIT
5	DATA 4 COM.	38	MODE INDICATOR
6	DATA 5 COM.	39	READ ENABLE
7	DATA 6 COM.	40	LOAD ENABLE
8	DATA 7 COM.	41	LOAD DELAY
9	DATA 8 COM.	48	LOAD COMMAND COMMON
10	DATA 9 COM.	49	UNIT ENABLE
16	MODE IND. COM.	50	UNIT EN. COM.
17	READ EN. COM.	53	MEMORY RESET
18	LOAD EN. COM.	54	MEM. RESET COM.
19	LOAD DELAY COM.	59	READ CLOCK COM.
23	DATA 0 BIT	60	READ CLOCK
24	DATA 1 BIT	61	DISPLAY/DIGITAL COMMON
25	DATA 2 BIT	62	DISPLAY/DIGITAL
26	DATA 3 BIT	65	READ START
27	DATA 4 BIT	66	READ START COMMON
28	DATA 5 BIT	69	LOAD COMMON

@

SECTION 3

CIRCUIT DESCRIPTION

The 1350 has two circuit boards, a control board and a power supply board. The control board contains the digital to analog converter circuits and the control circuits. The operation of these circuits is described in the following pages.

In the remainder of the circuit description the term "digital to analog" is abreviated d/a.

Control Board

Digital to Analog Circuit (see Diagram 1A). The input to the d/a circuit consists of ten twisted pair lines that are connected to the line receivers U41, U42, U43, U44, and U45. The line receivers convert the signals from the R7912 to standard TTL level. The outputs of the line receivers are connected to a set of latches (U11, U12 or U13) that serve as demultiplexers to separate the vertical and horizontal information.

The information is received from the R7912 and loaded into one of the latches. If it is a vertical address, it is transmitted through the vertical latch or, if it is a horizontal address, it is loaded into a horizontal latch. The switching of the latches and control of which latch is to receive the information is controlled by bit 9.

The output of the latches then goes to the d/a converters (U33 or U34) so that the binary word value that is received by the d/a

converter comes out as an anlog voltage.

Associated with the d/a converters are some operational amplifiers. In the case of the horizontal d/a converter (U34), there is a single operational amplifier, U35. The output of U35 goes through an X-gain potentiometer (R21), where the output can be calibrated. In the case of the vertical d/a converter (U33), an inversion has to follow the operational amplifier that is fed by the d/a converter, so there are two operational amplifiers following U33. The first amplifier (U31) serves as a current to voltage converter and the second amplifier (U32) is an inverter with a gain less than one. This gain serves to attenuate the 5V signal, which is the output of the current to voltage converter. The output of U32 goes through a Y-gain potentiometer (R22) where the output can be calibrated.

Control Circuit (see Diagram 1B). There are many circuits in the 1350 that depend on responses from the R7912 memory card. Because there are so few things the 1350 can do by itself, the control circuit has to be connected to and tested by the R7912 with a memory installed.

The simplest operation of the control circuit is the READ operation. This operation can be initiated by depressing the READ MANUAL button. When this button is pressed, U75A, a one-shot pulse generator, generates a narrow pulse. The button operates a flip-flop (U64) so there can be no response to contact bounce in the button. U75A will generate a pulse each time the MANUAL button is depressed. This pulse is applied to U63B, a one-shot which is the read start pulse generator.

Upon receiving the Read Start signal, the memory control circuit in the R7912 responds with a Read Enable signal. This Read Enable signal is received by U74A of the Memory Display Unit. U74A responds by going HI. When U74A goes HI it causes pin 5 of U85 to go HI. U85 is part of a circuit that can be called the read clock chain which is made up of U85, U84A, U83A and U83B.

When pin 5 of U85 goes HI it initiates a pulse in U85. When this pulse ends, it initiates a pulse in U84A. When the pulse in 84A ends, it initiates a pulse in U83A. U83A goes to U83B and U83B reinitiates a pulse out of U85 again. Therefore, as long as U85 is held HI, these four one-shots will fire one another in sequence with the last one firing the first, so the circuit will run continuously until the U85 level changes.

U84A produces a Read Clock pulse. U83A provides a delay following the Read Clock pulse. This delay gives the clock time to advance before the Z input to the monitor brightens up the beam. The Z pulse is provided by U83B. After the Z pulse has been sent, it is necessary that there is a delay before providing the next clock pulse so there is time for the Z pulse to turn off. U85 provides the delay for the next clock pulse.

The same pulse that provides the Read Clock pulse initiates a delay in U84B which generates a pulse called Latch Strobe. This pulse is fed into U24 of the d/a converter circuit and serves to strobe the data in the latches after the data has had a chance to settle.

The requirement of the R7912 is that the Read Clock pulses continue until the Read Enable goes LO. When Read Enable goes LO, U85 is no longer triggered so the cycle ends and waits for re-initiation. The circuit in the R7912 that determines when to turn off the Read Clock is a counter. When 512 horizontal addresses have been counted it is assumed that one full frame of data has been sent and the counter turns the Read circuit in the R7912 off. This Read circuit turns the Read Enable off which stops the Read Clock chain in the 1350.

The other function of the control circuit that is a basic element of the operation is a Load Cycle. This is an operation which loads data into the R7912 memory. The R7912 has two methods of loading. One is used with the repetitive type of waveform where the load command must come from external means. The other mode is the single-shot operation where the load command is generated within the R7912. This load command is initiated by the sweep gate so that the waveform will be digitized immediately following the firing of the sweep before the target has a chance to decay and the video information lost.

The LOAD MANUAL button has an anti-bounce flip-flop (U55) associated with the button. There is a single pulse generated each time the button is pressed. This pulse goes to U54 which is a one-shot generator with a pulse width of approximately 2 μsec.

Since the R7912 can be in either the digital or the non-store mode, the 1350 must know which mode and be able to take the appropriate action to generate the necessary pulses. To do this we have

@

a twisted pair line, called the Mode Indicator, coming in from the R7912. This line is used to control the gating circuits associated with U63A. This way, if the monitor is in a non-store mode, a 3 to 4 second delay is provided to allow the R7912 to switch into the digital mode and this provides sufficient time for the phase lock loop to become stable before initiating a Load Command. However, if the R7912 is already in the digital mode, this condition is sensed by the Mode Indicator signal and the 4 second delay is not provided. After the delay period or instantly, as dictated by the Mode Indicator, U73 produces a 400 ns pulse which is transmitted to the R7912 as a Load Command signal. Upon receiving the Load Command signal the R7912 responds with a Load Enable signal.

At the end of the Load Enable signal U65B, another one-shot generator, is triggered. If the R7912 was in the non-store mode this serves to reset the TV/DIGITAL CONTROL flip-flop U53C and U53B which was set at the beginning of the 4 seconds delay time. This clears the $\overline{\text{Display/Digital}}$ control line and allows the R7912 to go back to the non-store mode giving a television display. Thus the television display is interrupted only for the time necessary to perform the digitizing operation.

The remainder of the circuitry on the control board is used to automatically perform the aforementioned cycles.

If a waveform has been loaded and is to be displayed on the monitor immediately after the digitizing process, the READ-AFTER LOAD button should be pressed. This causes the pulse from the back edge of the Load Enable signal, generated at U65B, to initiate a Read

Start pulse. The Read Start pulse initiates the operation of the Read Clock chain, which operates as described earlier. If the operation is in a single-shot mode, the R7912 memory will be automatically loaded and with READ-AFTER LOAD mode in effect, every single-shot event will be displayed on the monitor associated with the Memory Display Unit.

In the LOAD cycle another function that can be used is Automatic Load. When a repetitive type of waveform is received, a sequence of events are initiated. A load cycle will start first just as if it had been manually triggered, only at the completion of the load cycle the read cycle will automatically start and at the completion of the read cycle another load cycle will automatically start. This load and read cycle will repeat itself automatically until it is manually turned off. Not every waveform will necessarily be picked up. This depends on the repetition rate of the signal involved. The digitizing rate is approximately 60 ms and the read time is determined by the waveform being digitized, a total time of approximately 100 ms must elapse before another waveform can be taken. If a waveform has a slow repetition rate, the R7912 will examine and pick up every waveform. This will enable every waveform to be digitized and displayed.

If at any time during this mode of operation a unique display comes up and a longer look is desired or if a photograph is wanted, then the HOLD button can be depressed. This will immediately stop any further loading of the memory so the particular waveform will reside in memory until it is deliberately removed.

The Refreshed mode is another operation that can be used. In

this mode the read clock chain is speeded up by changing the delay between the $\overline{\text{Read Clock}}$ and the Z pulse. At this faster rate the memory can be read continuously. As soon as the Read Enable goes LO, U75B, a one-shot generator is fired. This generates another $\overline{\text{Read Start}}$ pulse. The $\overline{\text{Read Start}}$ pulse is fed to the R7912 and the R7912 responds with a Read Enable pulse. The Read Enable pulse restarts the Read cycle so that the Read cycle runs continuously. (When the cycle reaches the end it automatically restarts and runs again). This cycle is running at a faster rate so the outputs from the d/a converter will be much faster and a non-store monitor can be used to observe the waveform.

If desired, another waveform can be taken while the 1350 is still in the refreshed mode. When a Load cycle is initiated, either manually or automatically, the refreshed cycle is interrupted long enough for the digitizing to occur. When Load Enable goes negative the refreshed cycle is once again started. By this method the refreshed display terminates briefly during the loading of a new waveform, then restarts after that waveform has been digitized. The control that allows the refreshed mode to be interrupted then restarted again is the flip-flop U55B and U55C.

It must be understood that the memory can be terminated no matter what is going on. When a Load cycle is initiated an immediate response is received from the R7912 as a $\overline{\text{Load Delay}}$ signal. This signal is received by U71A which triggers U62B. U62B generates a signal called $\overline{\text{Memory Control Reset}}$. The signal causes any operation in process in the R7912 to be terminated.

During the time the $\overline{\text{Load}}$ $\overline{\text{Delay}}$ signal is present (approximately 100 μs) U63B (the one-shot that generates the $\overline{\text{Read}}$ $\overline{\text{Start}}$ pulse) is disabled, so no new Read Cycle can be initiated. This brings the entire Read circuit to a halt. When the Read circuit stops, the refreshed cycle ends. In this condition, the R7912 is waiting to be loaded by a new waveform.

Even though the Read cycle is terminated, the Load command proceeds through the normal cycle as described previously. After the load command has been issued, the response comes back on Load Enable. The end of Load Enable then restarts the continuous read operation in the refreshed mode.

There are two lights on the front panel of the Memory Display Unit. One is the POWER light which indicates when there is power to the instrument. The other light is the LOAD light. The LOAD light indicates when a Load cycle is in progress.

When the Load cycle is in progress there is no television display. Because of this, there is no way for an individual to know what is happening within the instrument, therefore if a Load cycle is in progress, the LOAD light will be lit. When the 1350 is in the digital mode of operation the Load cycle lasts only 60 ms; the LOAD light is not lit during the Load cycle, but this is of no concern since the television display will only be interrupted briefly.

Power Supply

The power supply used in the 1350 provides regulated voltages

@

of +15V, -15V, and +5V. The Memory Display Unit will operate from a 115VAC or 230VAC power source. The primary windings of transformer T110 are connected in parallel for 115VAC operation and in series for 230VAC operation. This operation is controlled by voltage selector switch S102. The HI/LO switch S103 selects the primary taps of the transformer. The HI/LO switch should be set as indicated in Table 3-1.

TABLE 3-1

LINE VOLTAGE RANGE

Line Voltage		115	230
Line Range	LO	90 to 118	180 to 236
	HI	104 to 136	208 to 272

The +15V supply consists of bridge rectifier CR111, CR112, CR113, and CR114 connected across the secondary windings (terminals 10 and 11) of T110, filter capacitors C111 and C112, and the voltage regulator circuit containing Q123, Q129, Q133, Q135, and Q138. This supply is the reference supply for the +5V and -15V supplies.

The +5V supply consists of bridge rectifier CR141, CR142, CR143, and CR144 connected across the secondary windings (terminals 14 and 15) of T110, filter capacitor C141, and the voltage regulator circuit consisting of Q153, Q159, Q163, and Q168.

The -15V supply consists of bridge rectifier CR171, CR172, CR173, and CR174 connected across the secondary windings (terminals 12 and 13) of T110, filter capacitors C171 and C172, and the voltage regulator circuit consisting of Q183, Q189, Q193, and Q198.

@

SECTION 4

ADJUSTMENT PROCEDURE

Equipment Required

The following test equipment is required to complete the adjustment procedure for the 1350 Memory Display Unit.

1. DC Voltmeter: Range- 0V to 20V. Calibrated to an accuracy of within 1% at +15V and within 2% at +5V.

2. Sine-wave Generator with an output frequence of approximately 1 kHz and an output amplitude of 800 mV.

3. Test Oscilloscope: 5 MHz Bandwidth with a vertical sensitivity of 0.2V/div.

4. One 50Ω coaxial cable, approximately 42 inches in length, with BNC connectors.

Preliminary Procedure

Remove the top right hand cover from the Memory Display Unit. Using the interconnecting cables, connect the R7912, 1350, and the display monitor together.

Apply power to the three instruments and set the 1350 to the READ-REFRESHED mode.

1. CHECK/ADJUST +15V Supply.
   a. Connect a dc voltmeter between Pin 1 (+15V) and Pin 3 (Gnd) of J195 on the Power Supply circuit board, see Fig. 4-1.

@

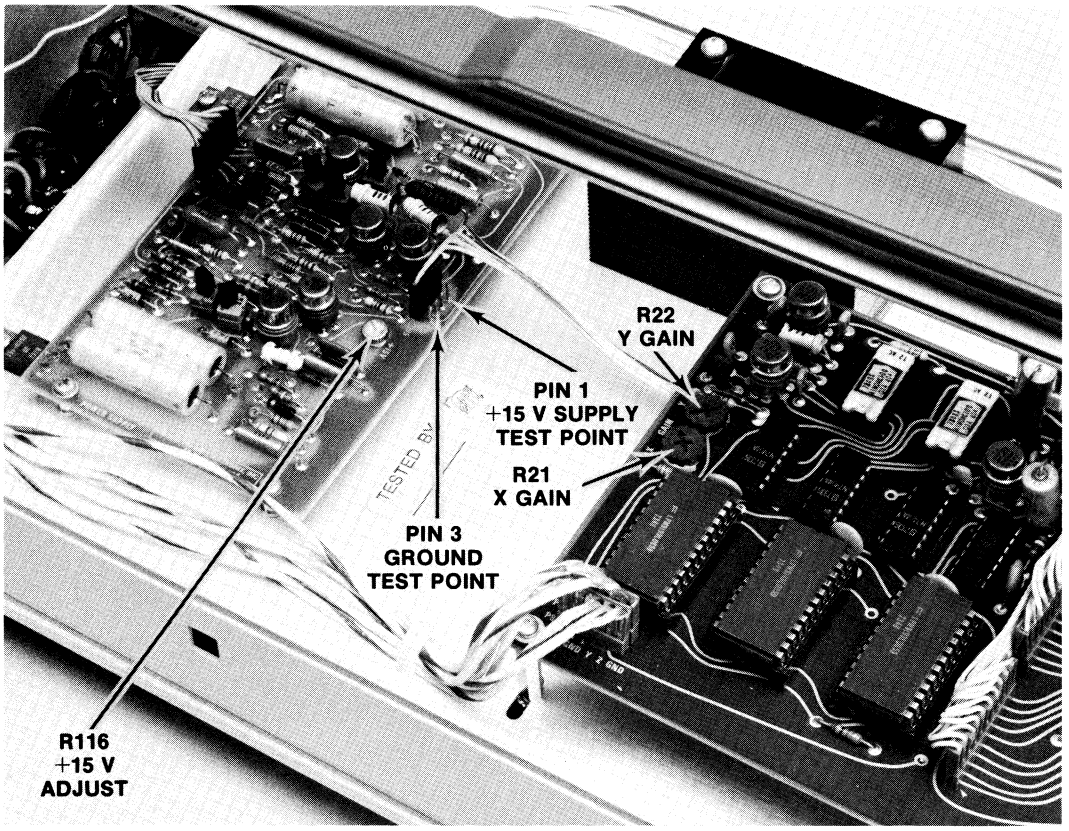

1888-04

Fig. 4-1. Adjustment and Test Point Location.

b. CHECK- The voltage should measure +15V ±0.15V.

c. ADJUST- R116, +15 Volts (see Fig. 4-1), for a meter reading of +15V.

2. CHECK -15V Supply.

a. Connect a dc voltmeter between Pin 4 (-15V) and Pin 3 (Gnd) of J195.

b. CHECK- for a meter reading of -15 volts ±0.3V.

3. CHECK +5V Supply.

a. Connect a dc voltmeter between Pin 2 (+5V) and Pin 3 (Gnd) of J195.

@

b. CHECK- for a meter reading of +5 volts ±0.1V.

4. CHECK/ADJUST X Gain.

a. With the coaxial cable, connect the vertical input of the test oscilloscope to the X OUTPUT connector on the rear panel of the 1350.

b. Set the test oscilloscope TIME/DIV to 5 ms/div and the vertical sensitivity to 0.2V/div.

c. Manually load a waveform into the 1350 from the R7912.

d. CHECK- for a sawtooth waveform 1V ±0.2V in amplitude.

e. ADJUST- R21, X Gain (see Fig. 4-1), for an amplitude of 1V.

5. CHECK/ADJUST Y Gain.

a. Connect the vertical input of the test oscilloscope to the Y OUTPUT of the 1350.

b. Set the test oscillsocope TIME/DIV to 5 ms/div and the vertical sensitivity to 0.2V/div.

c. Connect a 1 kHz sine-wave, approximately 800 mV in amplitude, to the vertical input of the R7912. Set the R7912 vertical sensitivity to 0.1V/div (this should slightly overscan the target).

d. Set the 1350 to the LOAD-AUTO position and center the sine-wave display on the monitor. Obtain a

display on the test oscilloscope.

e. Set the 1350 to the LOAD-MANUAL position.

f. CHECK- the test oscilloscope display for an amplitude of 1V ±0.2V.

g. ADJUST- R22, Y Gain (see Fig. 4-1), for a displayed amplitude of 1V.

6. CHECK Z Axis Out.

a. Connect the test oscilloscope to the Z OUTPUT of the 1350. Set the test oscilloscope TIME/DIV to 10 μs/div.

b. CHECK- for an output pulse 1V to 1.2V in amplitude, repetition rate approximately 40 μs, and the pulse width approximately 3.5 μs at the 50% point.

This completes the adjustment procedure for the 1350. Turn off the power and install the 1350 cover.

@

REPLACEABLE ELECTRICAL PARTS

PARTS ORDERING INFORMATION

Replacement parts are available from or through your local Tektronix, Inc. Field Office or representative.

Changes to Tektronix instruments are sometimes made to accommodate improved components as they become available, and to give you the benefit of the latest circuit improvements developed in our engineering department. It is therefore important, when ordering parts, to include the following information in your order: Part number, instrument type or number, serial number, and modification number if applicable.

If a part you have ordered has been replaced with a new or improved part, your local Tektronix, Inc. Field Office or representative will contact you concerning any change in part number.

Change information, if any, is located at the rear of this manual.

SPECIAL NOTES AND SYMBOLS

X000	Part first added at this serial number
00X	Part removed after this serial number

ITEM NAME

In the Parts List, an Item Name is separated from the description by a colon (:). Because of space limitations, an Item Name may sometimes appear as incomplete. For further Item Name identification, the U.S. Federal Cataloging Handbook H6-1 can be utilized where possible.

ABBREVIATIONS

ACTR	ACTUATOR	PLSTC	PLASTIC
ASSY	ASSEMBLY	QTZ	QUARTZ
CAP	CAPACITOR	RECP	RECEPTACLE
CER	CERAMIC	RES	RESISTOR
CKT	CIRCUIT	RF	RADIO FREQUENCY
COMP	COMPOSITION	SEL	SELECTED
CONN	CONNECTOR	SEMICOND	SEMICONDUCTOR
ELCTLT	ELECTROLYTIC	SENS	SENSITIVE
ELEC	ELECTRICAL	VAR	VARIABLE
INCAND	INCANDESCENT	WW	WIREWOUND
LED	LIGHT EMITTING DIODE	XFMR	TRANSFORMER
NONWIR	NON WIREWOUND	XTAL	CRYSTAL

CROSS INDEX MFR. CODE NUMBER TO MANUFACTURER

MFR.CODE	MANUFACTURER	ADDRESS	CITY,STATE,ZIP
01002	GENERAL ELECTRIC CO., INDUSTRIAL AND POWER CAPACITOR PRODUCTS DEPT.	JOHN ST.	HUDSON FALLS, NY 12839
01121	ALLEN-BRADLEY CO.	1201 2ND ST. SOUTH	MILWAUKEE, WI 53204
01295	TEXAS INSTRUMENTS, INC., SEMICONDUCTOR GROUP	P. O. BOX 5012	DALLAS, TX 75222
03508	GENERAL ELECTRIC CO., SEMI-CONDUCTOR PRODUCTS DEPT.	ELECTRONICS PARK	SYRACUSE, NY 13201
04713	MOTOROLA, INC., SEMICONDUCTOR PRODUCTS DIV.	5005 E. MCDOWELL RD.	PHOENIX, AZ 85036
05245	COMPONENTS CORP.	2857 HALSTED ST.	CHICAGO, IL 60657
05397	UNION CARBIDE CORP., MATERIALS SYSTEMS DIVISION	11901 MADISON AVE.	CLEVELAND, OH 44101
06665	PRECISION MONOLITHICS INC.	1500 SPACE PARK DR.	SANTA CLARA, CA 95050
07263	FAIRCHILD SEMICONDUCTOR, A DIV. OF FAIRCHILD CAMERA AND INSTRUMENT CORP.	464 ELLIS ST.	MOUNTAIN VIEW, CA 94042
07910	TELEDYNE SEMICONDUCTOR	12515 CHADRON AVE.	HAWTHORNE, CA 90250
08806	GENERAL ELECTRIC CO., MINIATURE LAMP PRODUCTS DEPT.	NELA PK.	CLEVELAND, OH 44112
09353	C AND K COMPONENTS, INC.	103 MORSE STREET	WATERTOWN, MA 02172
12040	NATIONAL SEMICONDUCTOR CORP.	COMMERCE DRIVE	DANBURY, CT 06810
12954	DICKSON ELECTRONICS CORP.	8700 E. THOMAS RD.	SCOTTSDALE, AZ 85252
24931	SPECIALTY CONNECTOR CO., INC.	3560 MADISON AVE.	INDIANAPOLIS, IN 46227
34371	HARRIS SEMICONDUCTOR, DIV. OF HARRIS-INTERTYPE CORP.	P. O. BOX 883	MELBOURNE, FL 32901
50157	N. L. INDUSTRIES, INC., ELECTRONICS DEPT.	P. O. BOX 787	MUSKEGON, MI 49443
56289	SPRAGUE ELECTRIC CO.		NORTH ADAMS, MA 01247
71400	BUSSMAN MFG., DIVISION OF MCGRAW-EDISON CO.	2536 W. UNIVERSITY ST.	ST. LOUIS, MO 63107
71468	ITT CANNON ELECTRIC	666 E. DYER RD.	SANTA ANA, CA 92702
71590	CENTRALAB ELECTRONICS, DIV. OF GLOBE-UNION, INC.	5757 N. GREEN BAY AVE.	MILWAUKEE, WI 53201
72982	ERIE TECHNOLOGICAL PRODUCTS, INC.	644 W. 12TH ST.	ERIE, PA 16512
73138	BECKMAN INSTRUMENTS, INC., HELIPOT DIV.	2500 HARBOR BlVD.	FULLERTON, CA 92634
75042	TRW ELECTRONIC COMPONENTS, IRC FIXED RESISTORS, PHILADELPHIA DIVISION	401 N. BROAD ST.	PHILADELPHIA, PA 19108
80009	TEKTRONIX, INC.	P. O. BOX 500	BEAVERTON, OR 97077
82389	SWITCHCRAFT, INC.	5555 N. ELSTON AVE.	CHICAGO, IL 60630
90201	MALLORY CAPACITOR CO., DIV. OF P. R. MALLORY CO., INC.	3029 E. WASHINGTON ST.	INDIANAPOLIS, IN 46206
91637	DALE ELECTRONICS, INC.	P. O. BOX 609	COLUMBUS, NB 68601

Ckt No.	Tektronix Part No.	Serial/Model No. Eff	Dscont	Name & Description	Mfr Code	Mfr Part Number
	670-3315-00			CIRCUIT BOARD ASSEMBLY:POWER SUPPLY	80009	670-3315-00
	670-3358-00			CIRCUIT BOARD ASSEMBLY:CONTROL	80009	670-3358-00
C11	283-0080-00			CAP.,FXD,CER DI:0.022UF,+80-20%,25V	72982	5835-515E223Z
C12	283-0080-00			CAP.,FXD,CER DI:0.022UF,+80-20%,25V	72982	5835-515E223Z
C13	283-0080-00			CAP.,FXD,CER DI:0.022UF,+80-20%,25V	72982	5835-515E223Z
C16	283-0180-00			CAP.,FXD,CER DI:5600PF,20%,200V	72982	8121N204E562M
C17	283-0180-00			CAP.,FXD,CER DI:5600PF,20%,200V	72982	8121N204E562M
C18	283-0180-00			CAP.,FXD,CER DI:5600PF,20%,200V	72982	8121N204E562M
C19	283-0180-00			CAP.,FXD,CER DI:5600PF,20%,200V	72982	8121N204E562M
C24	283-0067-00			CAP.,FXD,CER DI:0.001UF,10%,200V	72982	835-515Z5D-102M
C25	283-0111-00			CAP.,FXD,CER DI:0.1UF,20%,50V	72982	8131-050651104M
C26	290-0309-00			CAP.,FXD,CER DI:150PF,10%,50V	56289	109D107X0025F2
C27	290-0539-00			CAP.,FXD,ELCTLT:47UF,20%,20V	90201	THF476M020P1F
C30	281-0542-00			CAP.,FXD,CER DI:18PF,10%,500V	72982	301-002C0G0180K
C31	283-0094-00			CAP.,FXD,CER DI:27PF,10%,200V	72982	835-515A270K
C32	283-0204-00			CAP.,FXD,CER DI:0.01UF,20%,50V	72982	8121-N058651103M
C33	283-0204-00			CAP.,FXD,CER DI:0.01UF,20%,50V	72982	8121-N058651103M
C34	283-0204-00			CAP.,FXD,CER DI:0.01UF,20%,50V	72982	8121-N058651103M
C35	283-0094-00			CAP.,FXD,CER DI:27PF,10%,200V	72982	835-515A270K
C36	283-0204-00			CAP.,FXD,CER DI:0.01UF,20%,50V	72982	8121-N058651103M
C37	283-0204-00			CAP.,FXD,CER DI:0.01UF,20%,50V	72982	8121-N058651103M
C38	283-0204-00			CAP.,FXD,CER DI:0.01UF,20%,50V	72982	8121-N058651103M
C39	290-0539-00			CAP.,FXD,ELCTLT:47UF,20%,20V	90201	THF476M020P1F
C40	283-0103-00			CAP.,FXD,CER DI:180PF,5%,500V	56289	40C393A1
C41	283-0103-00			CAP.,FXD,CER DI:180PF,5%,500V	56289	40C393A1
C42	283-0103-00			CAP.,FXD,CER DI:180PF,5%,500V	56289	40C393A1
C43	283-0103-00			CAP.,FXD,CER DI:180PF,5%,500V	56289	40C393A1
C44	283-0103-00			CAP.,FXD,CER DI:180PF,5%,500V	56289	40C393A1
C45	283-0103-00			CAP.,FXD,CER DI:180PF,5%,500V	56289	40C393A1
C46	283-0103-00			CAP.,FXD,CER DI:180PF,5%,500V	56289	40C393A1
C47	283-0103-00			CAP.,FXD,CER DI:180PF,5%,500V	56289	40C393A1
C48	283-0103-00			CAP.,FXD,CER DI:180PF,5%,500V	56289	40C393A1
C49	283-0103-00			CAP.,FXD,CER DI:180PF,5%,500V	56289	40C393A1
C50	290-0309-00			CAP.,FXD,CER DI:150PF,10%,50V	56289	109D107X0025F2
C51	290-0134-00			CAP.,FXD,ELCTLT:22UF,20%,15V	56289	150D226X0015B2
C54	283-0054-00			CAP.,FXD,CER DI:150PF,5%,200V	72982	855-535U2J151J
C55	283-0003-00			CAP.,FXD,CER DI:0.01UF,+80-20%,150V	56289	20C205A1
C56	283-0010-00			CAP.,FXD,CER DI:0.05UF,+100-20%,50V	56289	273C20
C60	283-0060-00			CAP.,FXD,CER DI:100PF,5%,200V	72982	855-535U2J101J
C61	283-0010-00			CAP.,FXD,CER DI:0.05UF,+100-20%,50V	56289	273C20
C62	283-0003-00			CAP.,FXD,CER DI:0.01UF,+80-20%,150V	56289	20C205A1
C63	283-0060-00			CAP.,FXD,CER DI:100PF,5%,200V	72982	855-535U2J101J
C64	283-0003-00			CAP.,FXD,CER DI:0.01UF,+80-20%,150V	56289	20C205A1
C65	290-0539-00			CAP.,FXD,ELCTLT:47UF,20%,20V	90201	THF476M020P1F
C66	283-0060-00			CAP.,FXD,CER DI:100PF,5%,200V	72982	855-535U2J101J
C67	283-0003-00			CAP.,FXD,CER DI:0.01UF,+80-20%,150V	56289	20C205A1
C68	283-0003-00			CAP.,FXD,CER DI:0.01UF,+80-20%,150V	56289	20C205A1
C69	283-0060-00			CAP.,FXD,CER DI:100PF,5%,200V	72982	855-535U2J101J
C72	283-0060-00			CAP.,FXD,CER DI:100PF,5%,200V	72982	855-535U2J101J
C73	283-0003-00			CAP.,FXD,CER DI:0.01UF,+80-20%,150V	56289	20C205A1
C74	283-0060-00			CAP.,FXD,CER DI:100PF,5%,200V	72982	855-535U2J101J

Ckt No.	Tektronix Part No.	Serial/Model No. Eff	Dscont	Name & Description	Mfr Code	Mfr Part Number
C75	283-0060-00			CAP.,FXD,CER DI:100PF,5%,200V	72982	855-535U2J101J
C76	283-0103-00			CAP.,FXD,CER DI:180PF,5%,500V	56289	40C393A1
C77	283-0103-00			CAP.,FXD,CER DI:180PF,5%,500V	56289	40C393A1
C78	283-0103-00			CAP.,FXD,CER DI:180PF,5%,500V	56289	40C393A1
C79	283-0103-00			CAP.,FXD,CER DI:180PF,5%,500V	56289	40C393A1
C82	285-0598-00			CAP.,FXD,PLSTC:0.01UF,5%,100V	01002	64F10A3103
C83	283-0003-00			CAP.,FXD,CER DI:0.01UF,+80-20%,150V	56289	20C205A1
C84	283-0150-00			CAP.,FXD,CER DI:650PF,5%,200V	72982	835-5158651J
C85	283-0000-00			CAP.,FXD,CER DI:0.001UF,+100-0%,500V	56289	40C626
C86	283-0060-00			CAP.,FXD,CER DI:100PF,5%,200V	72982	855-535U2J101J
C87	283-0000-00			CAP.,FXD,CER DI:0.001UF,+100-0%,500V	56289	40C626
C88	283-0010-00			CAP.,FXD,CER DI:0.05UF,+100-20%,50V	56289	273C20
C90	283-0180-00			CAP.,FXD,CER DI:5600PF,20%,200V	72982	8121N204E562M
C91	283-0180-00			CAP.,FXD,CER DI:5600PF,20%,200V	72982	8121N204E562M
C92	283-0180-00			CAP.,FXD,CER DI:5600PF,20%,200V	72982	8121N204E562M
C93	283-0180-00			CAP.,FXD,CER DI:5600PF,20%,200V	72982	8121N204E562M
C94	283-0180-00			CAP.,FXD,CER DI:5600PF,20%,200V	72982	8121N204E562M
C95	283-0180-00			CAP.,FXD,CER DI:5600PF,20%,200V	72982	8121N204E562M
C96	283-0180-00			CAP.,FXD,CER DI:5600PF,20%,200V	72982	8121N204E562M
C97	283-0180-00			CAP.,FXD,CER DI:5600PF,20%,200V	72982	8121N204E562M
C98	283-0180-00			CAP.,FXD,CER DI:5600PF,20%,200V	72982	8121N204E562M
C99	283-0180-00			CAP.,FXD,CER DI:5600PF,20%,200V	72982	8121N204E562M
C111	290-0394-00			CAP.,FXD,ELCTLT:160UF,10%,50V	56289	109D167X9050W2
C112	290-0394-00			CAP.,FXD,ELCTLT:160UF,10%,50V	56289	109D167X9050W2
C116	290-0135-00			CAP.,FXD,ELCTLT:15UF,20%,20V	12954	D15B20MI
C121	283-0026-00			CAP.,FXD,CER DI:0.2UF,20%,25V	56289	274C3
C123	281-0549-00			CAP.,FXD,CER DI:68PF,10%,500V	72982	301-000U2J0680K
C136	290-0183-00			CAP.,FXD,ELCTLT:15UF,20%,20V	05397	K1J35KS
C139	290-0135-00			CAP.,FXD,ELCTLT:15UF,20%,20V	12954	D15B20MI
C141	290-0409-00			CAP.,FXD,ELCTLT:1000UF,75%,25V	56289	39D40827
C159	281-0512-00			CAP.,FXD,CER DI:27PF,+/-2.7PF,500V	72982	308-000C0G0270K
C169	290-0135-00			CAP.,FXD,ELCTLT:15UF,20%,20V	12954	D15B20MI
C171	290-0394-00			CAP.,FXD,ELCTLT:160UF,10%,50V	56289	109D167X9050W2
C172	290-0394-00			CAP.,FXD,ELCTLT:160UF,10%,50V	56289	109D167X9050W2
C176	290-0135-00			CAP.,FXD,ELCTLT:15UF,20%,20V	12954	D15B20MI
C180	281-0622-00			CAP.,FXD,CER DI:47PF,1%,500V	72982	308-000C0G0470F
C196	290-0301-00			CAP.,FXD,ELCTLT:10UF,10%,20V	56289	150D106X9020B2
C199	290-0135-00			CAP.,FXD,ELCTLT:15UF,20%,20V	12954	D15B20MI
CR63	152-0141-02			SEMICOND DEVICE:SILICON,30V,150MA	07910	CD8220
CR64	152-0141-02			SEMICOND DEVICE:SILICON,30V,150MA	07910	CD8220
CR76	152-0141-02			SEMICOND DEVICE:SILICON,30V,150MA	07910	CD8220
CR77	152-0141-02			SEMICOND DEVICE:SILICON,30V,150MA	07910	CD8220
CR111	152-0107-00			SEMICOND DEVICE:SILICON,375V,400MA	80009	152-0107-00
CR112	152-0107-00			SEMICOND DEVICE:SILICON,375V,400MA	80009	152-0107-00
CR113	152-0107-00			SEMICOND DEVICE:SILICON,375V,400MA	80009	152-0107-00
CR114	152-0107-00			SEMICOND DEVICE:SILICON,375V,400MA	80009	152-0107-00
CR126	152-0141-02			SEMICOND DEVICE:SILICON,30V,150MA	07910	CD8220
CR127	152-0141-02			SEMICOND DEVICE:SILICON,30V,150MA	07910	CD8220
CR135	152-0075-00			SEMICOND DEVICE:GE,25V,40MA	72982	ED48
CR141	152-0107-00			SEMICOND DEVICE:SILICON,375V,400MA	80009	152-0107-00
CR142	152-0107-00			SEMICOND DEVICE:SILICON,375V,400MA	80009	152-0107-00

Ckt No.	Tektronix Part No.	Serial/Model No. Eff	Dscont	Name & Description	Mfr Code	Mfr Part Number
CR143	152-0107-00			SEMICOND DEVICE:SILICON,375V,400MA	80009	152-0107-00
CR144	152-0107-00			SEMICOND DEVICE:SILICON,375V,400MA	80009	152-0107-00
CR150	152-0141-02			SEMICOND DEVICE:SILICON,30V,150MA	07910	CD8220
CR171	152-0107-00			SEMICOND DEVICE:SILICON,375V,400MA	80009	152-0107-00
CR172	152-0107-00			SEMICOND DEVICE:SILICON,375V,400MA	80009	152-0107-00
CR173	152-0107-00			SEMICOND DEVICE:SILICON,375V,400MA	80009	152-0107-00
CR174	152-0107-00			SEMICOND DEVICE:SILICON,375V,400MA	80009	152-0107-00
DS1	150-0048-00			LAMP,INCAND:5V,60MA	08806	683
DS2	150-0045-00			LAMP,INCAND:5V,0.06A	08806	685
F101	159-0043-00			FUSE,CARTRIDGE:3AG,0.6A,250V,SLOW-BLOW	71400	MDL6-10
F102	159-0029-00			FUSE,CARTRIDGE:3AG,0.3A,250V,MEDIUM-BLOW	71400	MDL3-10
FL101	119-0420-00			FILTER,RAD INT:6A,400HZ,250VAC	05245	6EF1
J50	131-1405-00			CABLE,SP,ELEC:	80009	131-1405-00
J60	131-0569-00			CONNECTOR,RCPT:	71468	DB25S
J70	131-0955-00			CONNECTOR,RCPT,:BNC,FEMALE	24931	28JR200-1
J80	131-0955-00			CONNECTOR,RCPT,:BNC,FEMALE	24931	28JR200-1
J90	131-0955-00			CONNECTOR,RCPT,:BNC,FEMALE	24931	28JR200-1
Q63	151-0190-00			TRANSISTOR:SILICON,NPN	04713	2N3904
Q123	151-0261-00			TRANSISTOR:SILICON,PNP,DUAL	12040	NS7410
Q129	151-0134-00			TRANSISTOR:SILICON,PNP	04713	2N2905A
Q133	151-0188-00			TRANSISTOR:SILICON,PNP	04713	2N3906
Q135	151-0192-00			TRANSISTOR:SILICON,NPN,SEL FROM MPS6521	80009	151-0192-00
Q138	151-0352-00			TRANSISTOR:SILICON,NPN	03508	X44C282
Q153	151-0232-00			TRANSISTOR:SILICON,NPN,DUAL	12040	NS7348
Q159	151-0188-00			TRANSISTOR:SILICON,PNP	04713	2N3906
Q163	151-0188-00			TRANSISTOR:SILICON,PNP	04713	2N3906
Q168	151-0366-00			TRANSISTOR:SILICON,PNP	03508	X45C277
Q183	151-0232-00			TRANSISTOR:SILICON,NPN,DUAL	12040	NS7348
Q189	151-0103-00			TRANSISTOR:SILICON,NPN	04713	2N2219A
Q193	151-0192-00			TRANSISTOR:SILICON,NPN,SEL FROM MPS6521	80009	151-0192-00
Q198	151-0352-00			TRANSISTOR:SILICON,NPN	03508	X44C282
R13	315-0102-00			RES.,FXD,COMP:1K OHM,5%,0.25W	01121	CB1025
R20	321-0227-00			RES.,FXD,FILM:2.26K OHM,1%,0.125W	75042	CEAT0-2261F
R21	311-1564-00			RES.,VAR,NONWIR:500 OHM,20%,0.50W	73138	91A-500R0M
R22	311-1564-00			RES.,VAR,NONWIR:500 OHM,20%,0.50W	73138	91A-500R0M
R23	321-0227-00			RES.,FXD,FILM:2.26K OHM,1%,0.125W	75042	CEAT0-2261F
R24	315-0392-00			RES.,FXD,COMP:3.9K OHM,5%,0.25W	01121	CB3925
R30	315-0122-00			RES.,FXD,COMP:1.2K OHM,5%,0.25W	01121	CB1225
R31	321-0260-00			RES.,FXD,FILM:4.99K OHM,1%,0.125W	75042	CEAT0-4991F
R32	321-0197-00			RES.,FXD,FILM:1.1K OHM,1%,0.125W	75042	CEAT0-1101F
R33	321-0288-00			RES.,FXD,FILM:9.76K OHM,1%,0.125W	75042	CEAT0-9761F
R35	315-0122-00			RES.,FXD,COMP:1.2K OHM,5%,0.25W	01121	CB1225
R41	315-0102-00			RES.,FXD,COMP:1K OHM,5%,0.25W	01121	CB1025
R43	315-0621-00			RES.,FXD,COMP:620 OHM,5%,0.25W	01121	CB6215
R44	315-0682-00			RES.,FXD,COMP:6.8K OHM,5%,0.25W	01121	CB6825
R45	315-0472-00			RES.,FXD,COMP:4.7K OHM,5%,0.25W	01121	CB4725
R46	315-0682-00			RES.,FXD,COMP:6.8K OHM,5%,0.25W	01121	CB6825
R47	315-0682-00			RES.,FXD,COMP:6.8K OHM,5%,0.25W	01121	CB6825
R48	315-0392-00			RES.,FXD,COMP:3.9K OHM,5%,0.25W	01121	CB3925

Ckt No.	Tektronix Part No.	Serial/Model No. Eff	Dscont	Name & Description	Mfr Code	Mfr Part Number
R49	315-0102-00			RES.,FXD,COMP:1K OHM,5%,0.25W	01121	CB1025
R50	315-0510-00			RES.,FXD,COMP:51 OHM,5%,0.25W	01121	CB5105
R51	315-0121-00			RES.,FXD,COMP:120 OHM,5%,0.25W	01121	CB1215
R52	315-0272-00			RES.,FXD,COMP:2.7K OHM,5%,0.25W	01121	CB2725
R53	315-0102-00			RES.,FXD,COMP:1K OHM,5%,0.25W	01121	CB1025
R54	315-0302-00			RES.,FXD,COMP:3K OHM,5%,0.25W	01121	CB3025
R55	315-0682-00			RES.,FXD,COMP:6.8K OHM,5%,0.25W	01121	CB6825
R56	315-0203-00			RES.,FXD,COMP:20K OHM,5%,0.25W	01121	CB2035
R57	315-0472-00			RES.,FXD,COMP:4.7K OHM,5%,0.25W	01121	CB4725
R58	315-0302-00			RES.,FXD,COMP:3K OHM,5%,0.25W	01121	CB3025
R59	315-0302-00			RES.,FXD,COMP:3K OHM,5%,0.25W	01121	CB3025
R60	315-0302-00			RES.,FXD,COMP:3K OHM,5%,0.25W	01121	CB3025
R61	315-0302-00			RES.,FXD,COMP:3K OHM,5%,0.25W	01121	CB3025
R62	315-0822-00			RES.,FXD,COMP:8.2K OHM,5%,0.25W	01121	CB8225
R63	315-0102-00			RES.,FXD,COMP:1K OHM,5%,0.25W	01121	CB1025
R64	315-0202-00			RES.,FXD,COMP:2K OHM,5%,0.25W	01121	CB2025
R65	315-0822-00			RES.,FXD,COMP:8.2K OHM,5%,0.25W	01121	CB8225
R66	315-0472-00			RES.,FXD,COMP:4.7K OHM,5%,0.25W	01121	CB4725
R67	315-0204-00			RES.,FXD,COMP:200K OHM,5%,0.25W	01121	CB2045
R68	315-0682-00			RES.,FXD,COMP:6.8K OHM,5%,0.25W	01121	CB6825
R69	315-0822-00			RES.,FXD,COMP:8.2K OHM,5%,0.25W	01121	CB8225
R70	315-0682-00			RES.,FXD,COMP:6.8K OHM,5%,0.25W	01121	CB6825
R71	315-0303-00			RES.,FXD,COMP:30K OHM,5%,0.25W	01121	CB3035
R72	315-0203-00			RES.,FXD,COMP:20K OHM,5%,0.25W	01121	CB2035
R73	315-0822-00			RES.,FXD,COMP:8.2K OHM,5%,0.25W	01121	CB8225
R74	315-0822-00			RES.,FXD,COMP:8.2K OHM,5%,0.25W	01121	CB8225
R75	315-0822-00			RES.,FXD,COMP:8.2K OHM,5%,0.25W	01121	CB8225
R76	315-0270-00			RES.,FXD,COMP:27 OHM,5%,0.25W	01121	CB2705
R82	315-0102-00			RES.,FXD,COMP:1K OHM,5%,0.25W	01121	CB1025
R83	315-0202-00			RES.,FXD,COMP:2K OHM,5%,0.25W	01121	CB2025
R84	315-0822-00			RES.,FXD,COMP:8.2K OHM,5%,0.25W	01121	CB8225
R85	315-0822-00			RES.,FXD,COMP:8.2K OHM,5%,0.25W	01121	CB8225
R86	315-0822-00			RES.,FXD,COMP:8.2K OHM,5%,0.25W	01121	CB8225
R87	315-0472-00			RES.,FXD,COMP:4.7K OHM,5%,0.25W	01121	CB4725
R115	321-0163-00			RES.,FXD,FILM:487 OHM,1%,0.125W	75042	CEAT0-4870F
R116	311-1260-00			RES.,VAR,NONWIR:250 OHM,10%,0.50W	73138	62PT-345-0
R117	321-0183-00			RES.,FXD,FILM:787 OHM,1%,0.125W	75042	CEAT0-7870F
R118	315-0201-00			RES.,FXD,COMP:200 OHM,5%,0.25W	01121	CB2015
R119	315-0132-00			RES.,FXD,COMP:1.3K OHM,5%,0.25W	01121	CB1325
R120	321-0184-00			RES.,FXD,FILM:806 OHM,1%,0.125W	75042	CEAT0-8060F
R121	315-0391-00			RES.,FXD,COMP:390 OHM,5%,0.25W	01121	CB3915
R122	315-0201-00			RES.,FXD,COMP:200 OHM,5%,0.25W	01121	CB2015
R123	315-0752-00			RES.,FXD,COMP:7.5K OHM,5%,0.25W	01121	CB7525
R126	301-0821-00			RES.,FXD,COMP:820 OHM,5%,0.50W	01121	EB8215
R127	315-0103-00			RES.,FXD,COMP:10K OHM,5%,0.25W	01121	CB1035
R128	315-0102-00			RES.,FXD,COMP:1K OHM,5%,0.25W	01121	CB1025
R129	315-0102-00			RES.,FXD,COMP:1K OHM,5%,0.25W	01121	CB1025
R131	315-0270-00			RES.,FXD,COMP:27 OHM,5%,0.25W	01121	CB2705
R133	315-0131-00			RES.,FXD,COMP:130 OHM,5%,0.25W	01121	CB1315
R135	315-0512-00			RES.,FXD,COMP:5.1K OHM,5%,0.25W	01121	CB5125
R136	315-0101-00			RES.,FXD,COMP:100 OHM,5%,0.25W	01121	CB1015
R138	308-0459-00			RES.,FXD,WW:1.1 OHM,5%,3W	91637	RS2B-D1R100J
R145	321-0199-06			RES.,FXD,FILM:1.15K OHM,0.25%,0.125W	75042	CEAT9-1151C

Ckt No.	Tektronix Part No.	Serial/Model No. Eff	Dscont	Name & Description	Mfr Code	Mfr Part Number
R146	321-0225-06			RES.,FXD,FILM:2.15K OHM,0.25%,0.125W	75042	CEAT9-2151C
R149	315-0622-00			RES.,FXD,COMP:6.2K OHM,5%,0.25W	01121	CB6225
R150	321-0822-06			RES.,FXD,FILM:1.76K OHM,0.25%,0.125W	75042	CEAT9-1761C
R151	321-0225-06			RES.,FXD,FILM:2.15K OHM,0.25%,0.125W	75042	CEAT9-2151C
R152	321-0823-01			RES.,FXD,FILM:3.425K OHM,0.5%,0.125W	75042	CEAT0-34250D
R153	315-0153-00			RES.,FXD,COMP:15K OHM,5%,0.25W	01121	CB1535
R156	301-0621-00			RES.,FXD,COMP:620 OHM,5%,0.50W	01121	EB6215
R159	315-0102-00			RES.,FXD,COMP:1K OHM,5%,0.25W	01121	CB1025
R165	315-0182-00			RES.,FXD,COMP:1.8K OHM,5%,0.25W	01121	CB1825
R166	315-0121-00			RES.,FXD,COMP:120 OHM,5%,0.25W	01121	CB1215
R168	308-0499-00			RES.,FXD,WW:0.50 OHM,10%,0.25W	91637	RS2B0R50K
R175	322-0210-00			RES.,FXD,FILM:1.5K OHM,1%,0.25W	75042	CEBT0-1501F
R176	322-0210-00			RES.,FXD,FILM:1.5K OHM,1%,0.25W	75042	CEBT0-1501F
R179	315-0242-00			RES.,FXD,COMP:2.4K OHM,5%,0.25W	01121	CB2425
R180	317-0751-00			RES.,FXD,COMP25W 750 OHM,5%,0.1	01121	BB7515
R183	315-0472-00			RES.,FXD,COMP:4.7K OHM,5%,0.25W	01121	CB4725
R189	315-0331-00			RES.,FXD,COMP:330 OHM,5%,0.25W	01121	CB3315
R195	317-0472-00			RES.,FXD,COMP:4.7K OHM,5%,0.125W	01121	BB4725
R196	317-0121-00			RES.,FXD,COMP:120 OHM,5%,0.125W	01121	BB1215
R198	308-0365-00			RES.,FXD,WW:1.5 OHM,5%,3W	56289	RS28-DIR500J
RT132	307-0127-00			RES.,THERMAL:1K OHM,1%	50157	2D1596
S10	260-1614-00			SWITCH,PUSH:	71590	2KCM0700001266
S101	260-1615-00			SWITCH,TOGGLE:DPDT,5A,115VAC	09353	7318
S102	260-1300-02			SWITCH,SLIDE:DPDT,3A,125VAC	82389	11A-1389
S103	260-1300-02			SWITCH,SLIDE:DPDT,3A,125VAC	82389	11A-1389
T110	120-0651-00			XFMR,POWER:	80009	120-0651-00
U11	156-0220-00			MICROCIRCUIT DI:DUAL 4-BIT LATCH	07263	U6N93L0859X
U12	156-0220-00			MICROCIRCUIT DI:DUAL 4-BIT LATCH	07263	U6N9310859X
U13	156-0220-00			MICROCIRCUIT DI:DUAL 4-BIT LATCH	07263	U6N9310859X
U21	156-0058-00			MICROCIRCUIT DI:HEX INVERTER	04713	MC7404P
U22	156-0058-00			MICROCIRCUIT DI:HEX INVERTER	04713	MC7404P
U23	156-0058-00			MICROCIRCUIT DI:HEX INVERTER	04713	MC7404P
U24	156-0072-00			MICROCIRCUIT LI:MONOSTABLE MV,TTL	12040	DM71421N
U31	156-0317-00			MICROCIRCUIT LI:OPERATIONAL AMPLIFIER	34371	HA2-2625-5
U32	156-0317-00			MICROCIRCUIT LI:OPERATIONAL AMPLIFIER	34371	HA2-2625-5
U33	156-0137-00			MICROCIRCUIT DI:10-BIT,DIGITAL-TO-ANALOG	06665	AIMDAC-100ACT2
U34	156-0137-00			MICROCIRCUIT DI:10-BIT,DIGITAL-TO-ANALOG	06665	AIMDAC-100ACT2
U35	156-0317-00			MICROCIRCUIT DI:10-BIT,DIGITAL-TO-ANALOG	06665	AIMDAC-100ACT2
U41	156-0274-00			MICROCIRCUIT DI:DUAL DIFF LINE RECIEVER	07263	U7B961559X
U42	156-0274-00			MICROCIRCUIT DI:DUAL DIFF LINE RECIEVER	07263	U7B961559X
U43	156-0274-00			MICROCIRCUIT DI:DUAL DIFF LINE RECIEVER	07263	U7B961559X
U44	156-0274-00			MICROCIRCUIT DI:DUAL DIFF LINE RECIEVER	07263	U7B961559X
U45	156-0274-00			MICROCIRCUIT DI:DUAL DIFF LINE RECIEVER	07263	U7B961559X
U51	156-0395-00			MICROCIRCUIT DI:DUAL DIFF LINE RECIEVER	07263	U7B961559X
U52	156-0043-00			MICROCIRCUIT DI:2-INPUT NOR GATE	01295	SN7402N
U53	156-0030-00			MICROCIRCUIT DI:QUAD 2-INPUT POS NAND GATE	01295	SN7400N
U54	156-0072-00			MICROCIRCUIT LI:MONOSTABLE MV,TTL	12040	DM71421N
U55	156-0030-00			MICROCIRCUIT DI:QUAD 2-INPUT POS NAND GATE	01295	SN7400N
U61	156-0395-00			MICROCIRCUIT DI:DECADE COUNTER	01295	SN7490AN
U62	156-0405-00			MICROCIRCUIT DI:DUAL RETRIG MONOSTABLE MV	07263	9602PC
U63	156-0405-00			MICROCIRCUIT DI:DUAL RETRIG MONOSTABLE MV	07263	9602PC
U64	156-0030-00			MICROCIRCUIT DI:QUAD 2-INPUT POS NAND GATE	01295	SN7400N
U65	156-0405-00			MICROCIRCUIT DI:DUAL RETRIG MONOSTABLE MV	07263	9602PC
U71	156-0274-00			MICROCIRCUIT DI:DUAL DIFF LINE RECIEVER	07263	U7B961559X

Ckt No.	Tektronix Part No.	Serial/Model No. Eff	Dscont	Name & Description	Mfr Code	Mfr Part Number
U72	156-0030-00			MICROCIRCUIT DI:QUAD 2-INPUT POS NAND GATE	01295	SN7400N
U73	156-0072-00			MICROCIRCUIT LI:MONOSTABLE MV,TTL	12040	DM71421N
U74	156-0274-00			MICROCIRCUIT DI:DUAL DIFF LINE RECIEVER	07263	U7B961559X
U75	156-0405-00			MICROCIRCUIT DI:DUAL RETRIG MONOSTABLE MV	07263	9602PC
U83	156-0405-00			MICROCIRCUIT DI:DUAL RETRIG MONOSTABLE MV	07263	9602PC
U84	156-0405-00			MICROCIRCUIT DI:DUAL RETRIG MONOSTABLE MV	07263	9602PC
U85	156-0072-00			MICROCIRCUIT LI:MONOSTABLE MV,TTL	12040	DM71421N
VR120	152-0212-00			SEMICOND DEVICE:ZENER,0.5W,9V,5%	04713	SZ50646

CKT NO	GRID LOC	CKT NO	GRID LOC	CKT NO	GRID LOC
C11	G2	C90	G7	R60	D6
C12	G3	C91	G7	R61	C6
C13	G4	C92	G8	R62	C7
C16	B6	C93	G8	R63	E8
C17	B7	C94	G9	R64	D8
C18	C9	C95	G9	R65	D8
C19	C10	C96	G9	R66	D9
C24	F5	C97	G10	R67	D9
C25	E4	C98	G10	R68	E10
C26	E5	C99	G11	R69	E10
C27	D4			R70	D10
C30	E2	CR63	E8	R71	E11
C31	E1	CR64	D8	R72	C8
C33	E7	CR76	C11	R73	C8
C34	B8	CR77	D11	R74	D10
C35	E4			R75	C11
C36	C9	P15	E8	R76	C11
C37	D10	P25	A12	R82	B8
C38	E8	P35	C5	R83	B9
C39	D5	P45	D5	R84	A9
C40	H7	P55	E5	R85	B10
C41	H7	P65	G5	R86	B10
C42	H8	P75	H5	R87	B12
C43	H8	P84	J2		
C44	H9	P85	J2		
C45	H9	P95	D4	S10	E12
C46	H9				
C47	H10	Q63	E9	U11	G2
C48	H10			U12	G3
C49	H11	R13	H4	U13	G5
C50	H10	R20	G1	U21	F2
C51	D6	R21	F1	U22	F3
C54	F9	R22	F1	U23	F4
C55	F10	R23	F1	U24	F5
C56	G11	R24	F5	U31	E2
C60	D7	R30	E2	U32	D2
C61	E8	R31	E2	U33	E3
C62	E5	R32	E2	U34	E4
C63	E8	R33	D3	U35	E4
C64	D1	R35	D5	U41	G7
C65	E9	R41	H6	U42	G8
C66	E10	R43	E6	U43	G9
C67	E1	R44	H12	U44	G10
C68	E4	R45	G11	U45	G11
C69	E11	R46	F11	U51	E7
C72	C8	R47	F11	U52	E8
C73	D2	R48	E11	U53	F9
C74	C10	R49	E10	U54	F10
C75	D11	R50	E6	U55	F11
C76	B6	R51	E6	U61	C7
C77	B7	R52	F7	U62	D8
C78	C9	R53	F7	U63	D9
C79	D10	R54	E7	U64	E10
C82	B8	R55	F8	U65	E11
C83	E2	R56	F9	U71	B7
C84	B9	R57	E10	U72	C8
C85	A9	R58	F10	U73	C9
C86	B10	R59	F10	U74	C10
C87	B10			U75	C11
C88	B12			U83	B9
				U84	B10
				U85	B11

1350 MEMORY DISPLAY UNIT

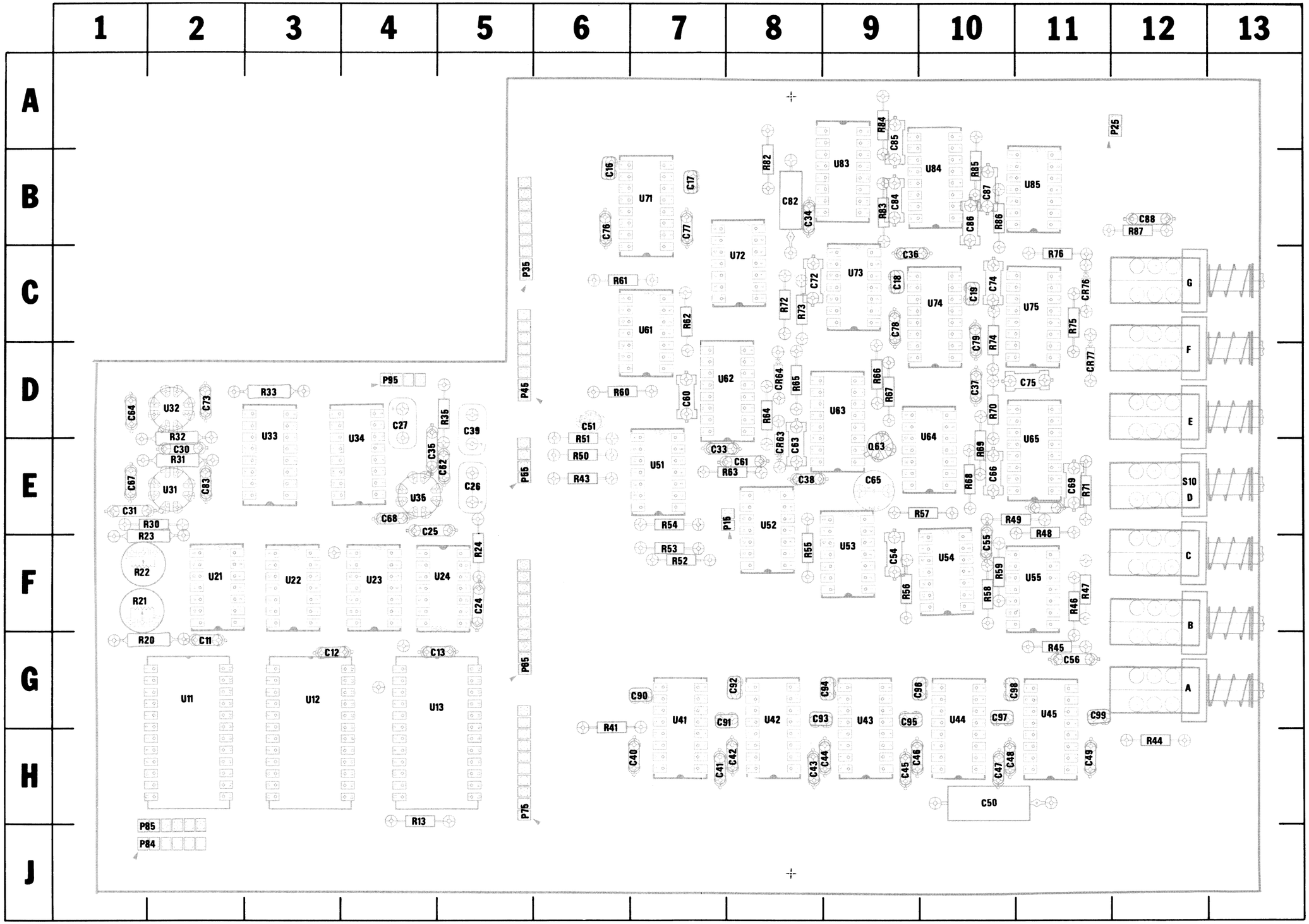

1350 Control Board

@

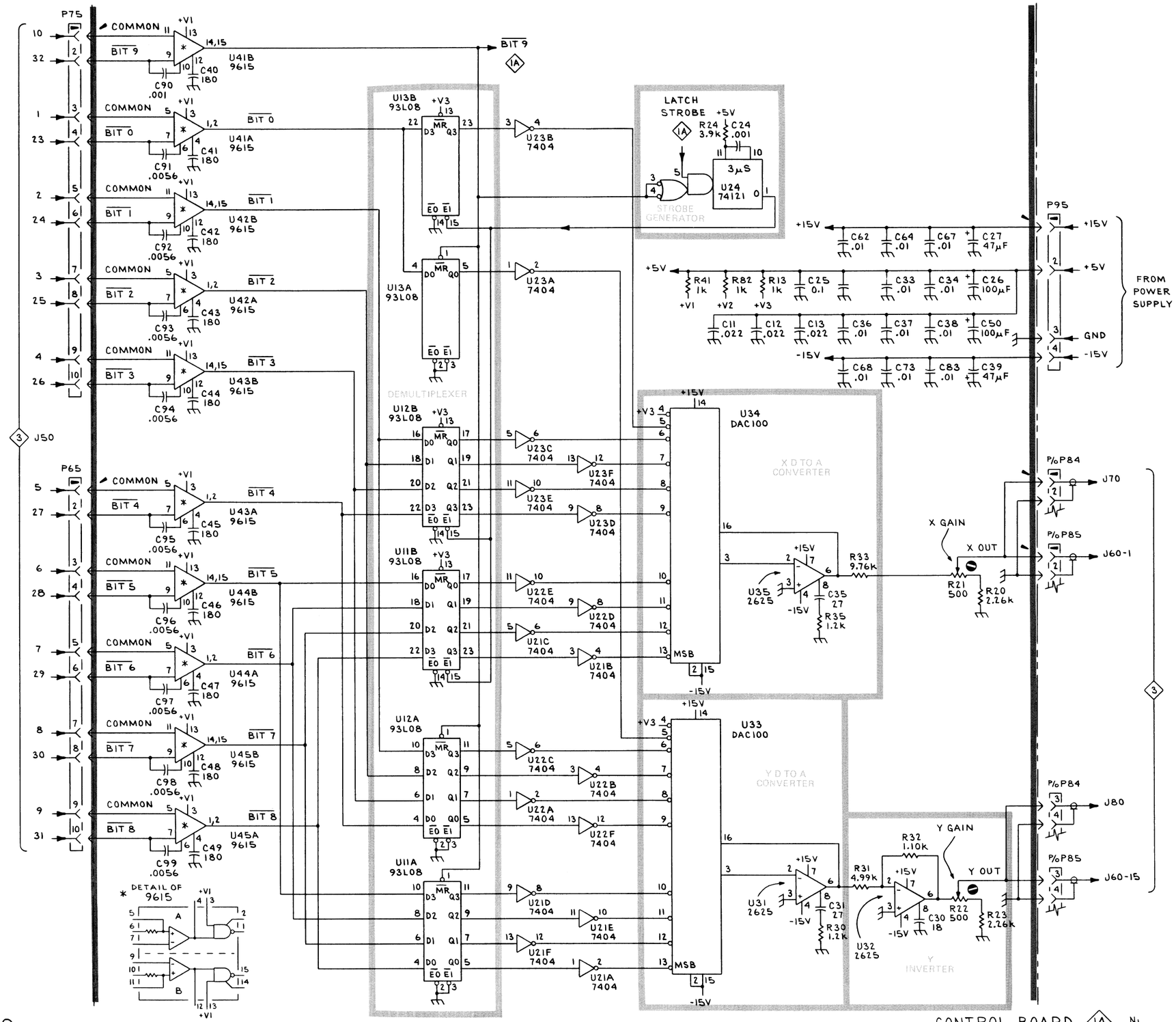
P75
P65
J50
COMMON
BIT 9
BIT 0
BIT 1
BIT 2
BIT 3
BIT 4
BIT 5
BIT 6
BIT 7
BIT 8
U41B 9615
U41A 9615
U42B 9615
U42A 9615
U43B 9615
U43A 9615
U44B 9615
U44A 9615
U45B 9615
U45A 9615
DETAIL OF 9615
U13B 93L08
U13A 93L08
U12B 93L08
U11B 93L08
U12A 93L08
U11A 93L08
DEMULTIPLEXER
U23B 7404
U23A 7404
U23C 7404
U23F 7404
U23E 7404
U23D 7404
U22E 7404
U22D 7404
U21C 7404
U21B 7404
U22C 7404
U22B 7404
U22A 7404
U22F 7404
U21D 7404
U21E 7404
U21F 7404
U21A 7404
LATCH STROBE
STROBE GENERATOR
U24 74121
3μS
U34 DAC100
X D TO A CONVERTER
U33 DAC100
Y D TO A CONVERTER
U35 2625
U31 2625
U32 2625
Y INVERTER
X GAIN
X OUT
Y GAIN
Y OUT
P95
FROM POWER SUPPLY
GND
P/o P84
P/o P85
J70
J60-1
J80
J60-15

1350 MEMORY DISPLAY UNIT

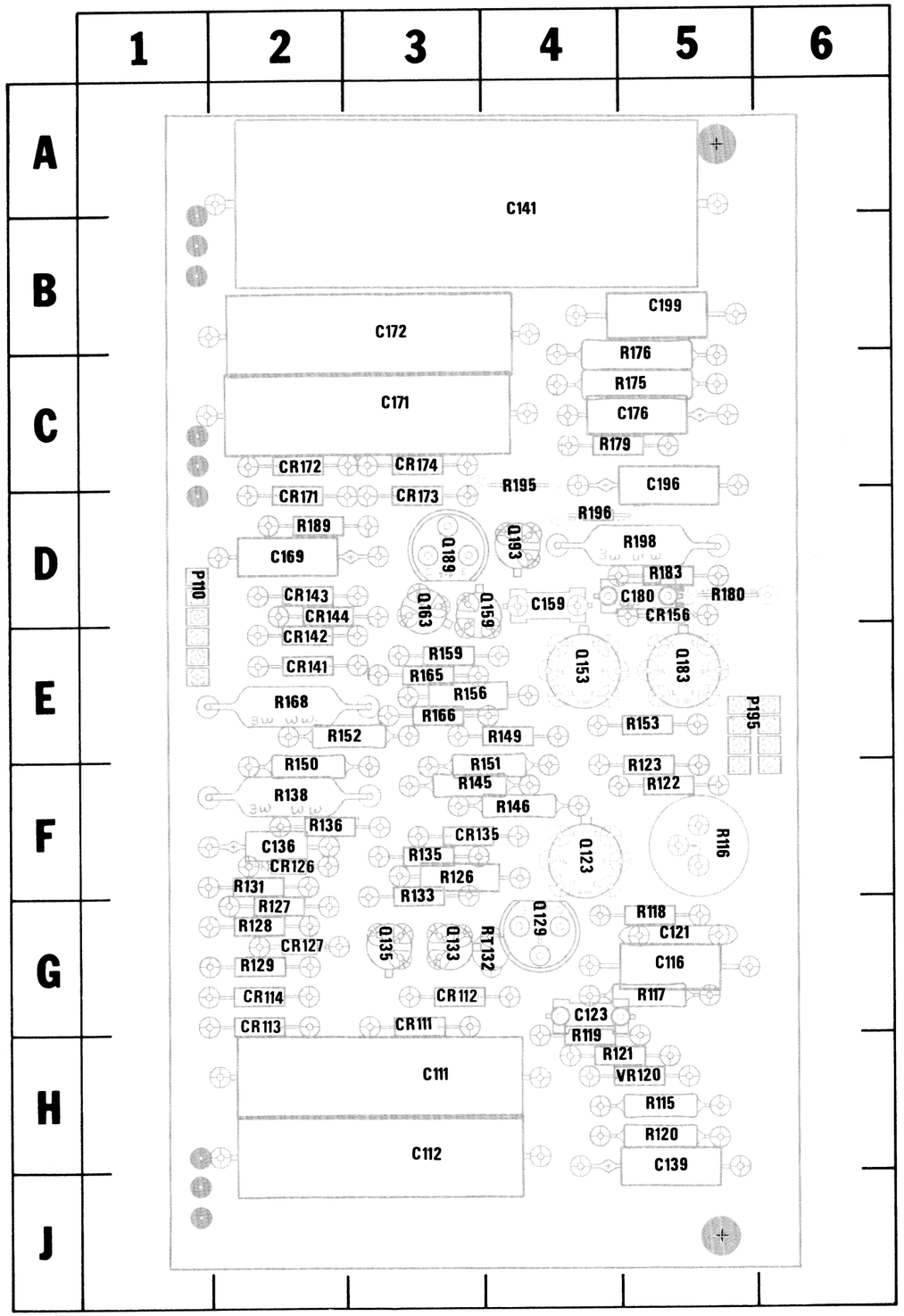

CKT NO	GRID LOC	CKT NO	GRID LOC
C111	H3	R131	F2
C112	H3	R133	G3
C116	G5	R135	F3
C121	G5	R136	F2
C123	G4	R138	F2
C136	F2	R145	F3
C139	H5	R146	F4
C141	A4	R149	E4
C159	D4	R150	F2
C169	D2	R151	F4
C171	C3	R152	E2
C172	B3	R153	E5
C176	C5	R156	E3
C180	D5	R159	E3
C196	D5	R165	E3
C199	B5	R166	E3
		R168	E2
		R175	C5
CR111	G3	R176	C5
CR112	G3	R179	C5
CR113	G2	R180	D5
CR114	G2	R183	D5
CR126	F2	R189	D2
CR127	G2	R195	C4
CR135	F3	R196	D4
CR141	E2	R198	D5
CR142	E2		
CR143	D2	RT132	G4
CR144	D2		
CR156	D5	VR120	H5
CR171	D2		
CR172	C2		
CR173	D3		
CR174	C3		
P110	D1		
P195	E6		
Q123	F4		
Q129	G4		
Q133	G3		
Q135	G3		
Q153	E4		
Q159	D4		
Q163	D3		
Q183	E5		
Q189	D3		
Q193	D4		
R115	H5		
R116	F5		
R117	G5		
R118	G5		
R119	H4		
R120	H5		
R121	H4		
R122	F5		
R123	F5		
R126	F3		
R127	G2		
R128	G2		
R129	G2		

1350 Power Supply Board

@

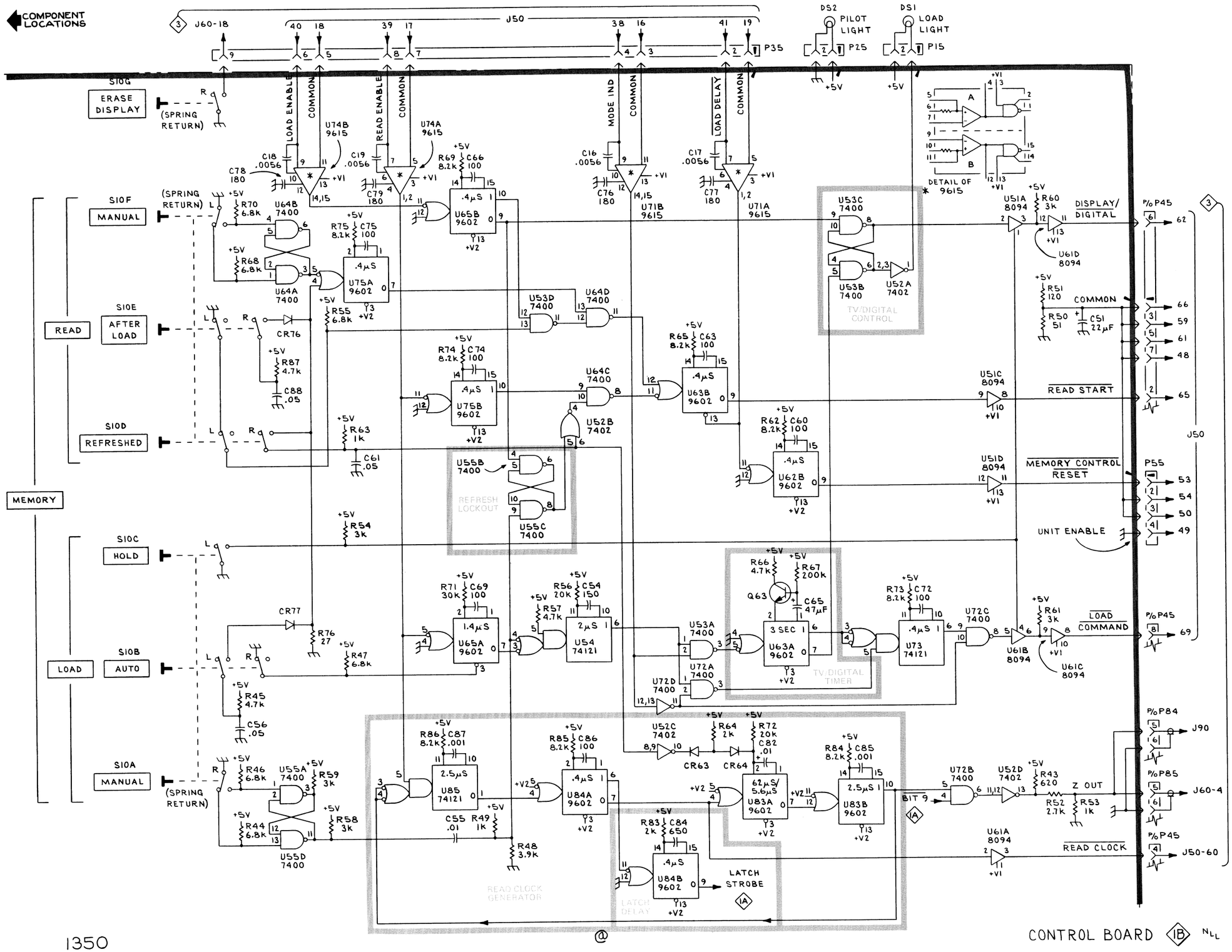

1350

@

CONTROL BOARD 1B NLL

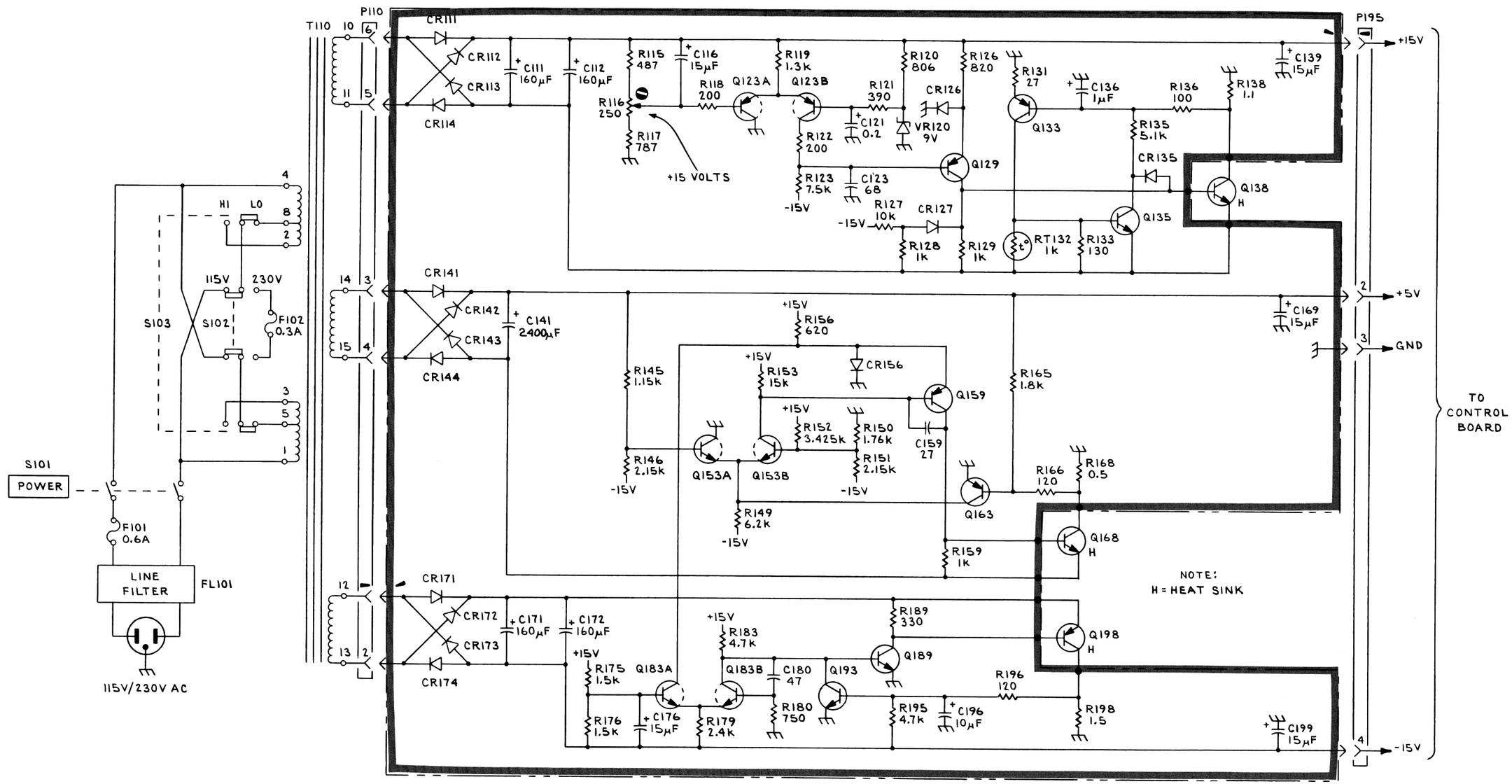

@

POWER SUPPLY 2 NLL

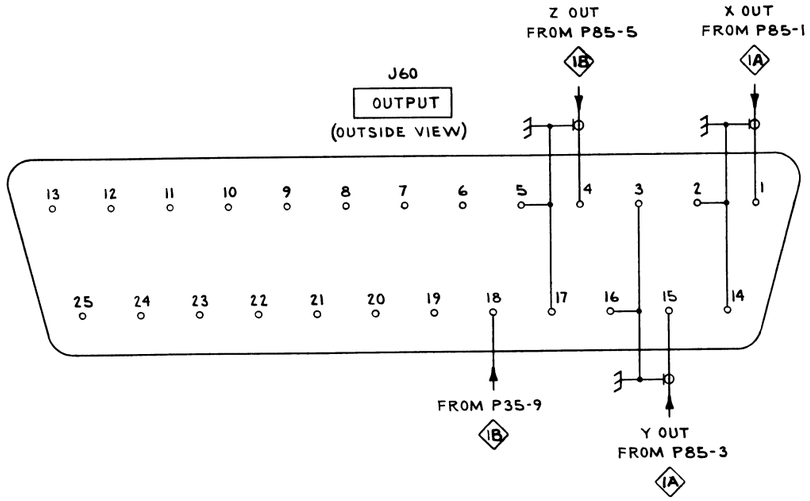

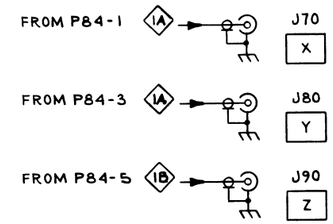

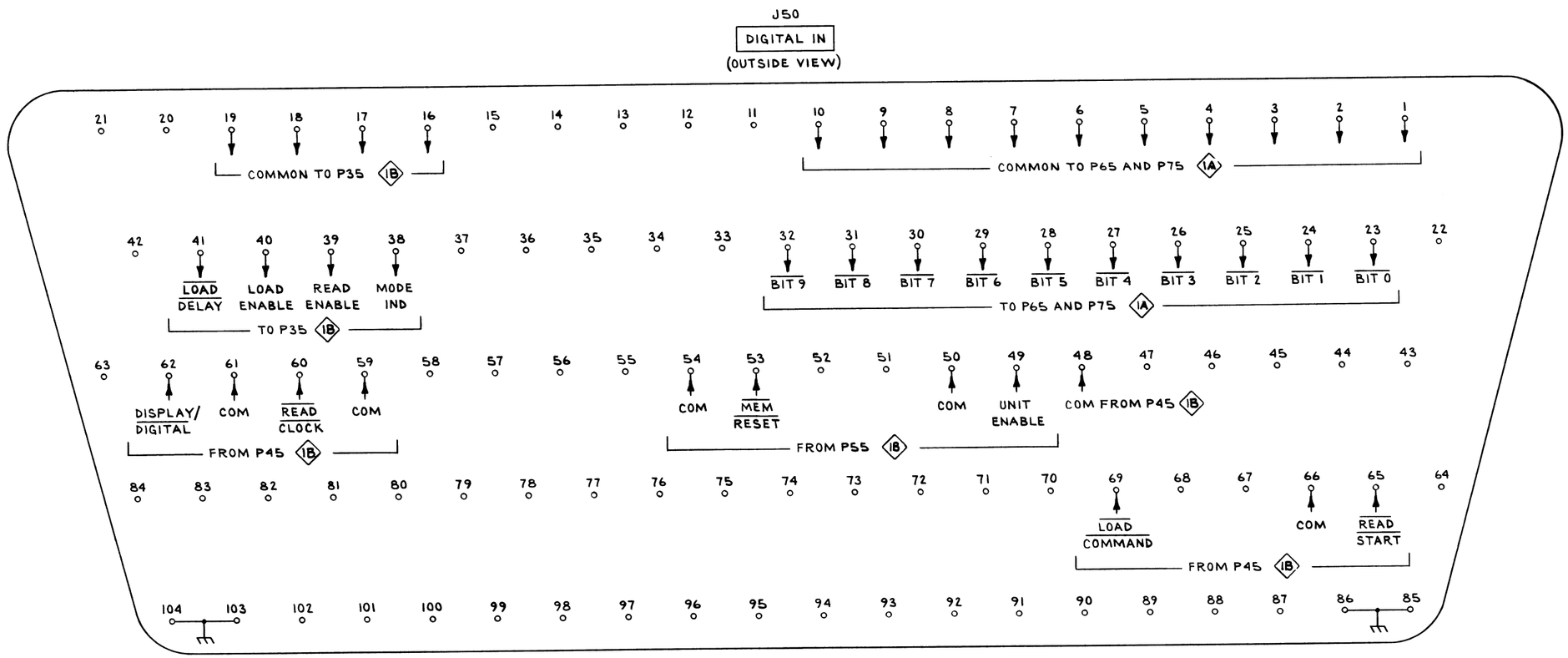

REAR PANEL CONNECTORS 3 NLL

REPLACEABLE MECHANICAL PARTS

PARTS ORDERING INFORMATION

Replacement parts are available from or through your local Tektronix, Inc. Field Office or representative.

Changes to Tektronix instruments are sometimes made to accommodate improved components as they become available, and to give you the benefit of the latest circuit improvements developed in our engineering department. It is therefore important, when ordering parts, to include the following information in your order: Part number, instrument type or number, serial number, and modification number if applicable.

If a part you have ordered has been replaced with a new or improved part, your local Tektronix, Inc. Field Office or representative will contact you concerning any change in part number.

Change information, if any, is located at the rear of this manual.

SPECIAL NOTES AND SYMBOLS

X000	Part first added at this serial number
00X	Part removed after this serial number

FIGURE AND INDEX NUMBERS

Items in this section are referenced by figure and index numbers to the illustrations.

INDENTATION SYSTEM

This mechanical parts list is indented to indicate item relationships. Following is an example of the indentation system used in the description column.

1 2 3 4 5 Name & Description

Assembly and/or Component
Attaching parts for Assembly and/or Component
- - - * - - -
Detail Part of Assembly and/or Component
Attaching parts for Detail Part
- - - * - - -
Parts of Detail Part
Attaching parts for Parts of Detail Part
- - - * - - -

Attaching Parts always appear in the same indentation as the item it mounts, while the detail parts are indented to the right. Indented items are part of, and included with, the next higher indentation. The separation symbol - - - * - - - indicates the end of attaching parts.

Attaching parts must be purchased separately, unless otherwise specified.

ITEM NAME

In the Parts List, an Item Name is separated from the description by a colon (:). Because of space limitations, an Item Name may sometimes appear as incomplete. For further Item Name identification, the U.S. Federal Cataloging Handbook H6-1 can be utilized where possible.

ABBREVIATIONS

"	INCH
#	NUMBER SIZE
ACTR	ACTUATOR
ADPTR	ADAPTER
ALIGN	ALIGNMENT
AL	ALUMINUM
ASSEM	ASSEMBLED
ASSY	ASSEMBLY
ATTEN	ATTENUATOR
AWG	AMERICAN WIRE GAGE
BD	BOARD
BRKT	BRACKET
BRS	BRASS
BRZ	BRONZE
BSHG	BUSHING
CAB	CABINET
CAP	CAPACITOR
CER	CERAMIC
CHAS	CHASSIS
CKT	CIRCUIT
COMP	COMPOSITION
CONN	CONNECTOR
COV	COVER
CPLG	COUPLING
CRT	CATHODE RAY TUBE
DEG	DEGREE
DWR	DRAWER
ELCTRN	ELECTRON
ELEC	ELECTRICAL
ELCTLT	ELECTROLYTIC
ELEM	ELEMENT
EPL	ELECTRICAL PARTS LIST
EQPT	EQUIPMENT
EXT	EXTERNAL
FIL	FILLISTER HEAD
FLEX	FLEXIBLE
FLH	FLAT HEAD
FLTR	FILTER
FR	FRAME or FRONT
FSTNR	FASTENER
FT	FOOT
FXD	FIXED
GSKT	GASKET
HDL	HANDLE
HEX	HEXAGON
HEX HD	HEXAGONAL HEAD
HEX SOC	HEXAGONAL SOCKET
HLCPS	HELICAL COMPRESSION
HLEXT	HELICAL EXTENSION
HV	HIGH VOLTAGE
IC	INTEGRATED CIRCUIT
ID	INSIDE DIAMETER
IDENT	IDENTIFICATION
IMPLR	IMPELLER
IN	INCH
INCAND	INCANDESCENT
INSUL	INSULATOR
INTL	INTERNAL
LPHLDR	LAMPHOLDER
MACH	MACHINE
MECH	MECHANICAL
MTG	MOUNTING
NIP	NIPPLE
NON WIRE	NOT WIRE WOUND
OBD	ORDER BY DESCRIPTION
OD	OUTSIDE DIAMETER
OVH	OVAL HEAD
PH BRZ	PHOSPHOR BRONZE
PL	PLAIN or PLATE
PLSTC	PLASTIC
PN	PART NUMBER
PNH	PAN HEAD
PWR	POWER
RCPT	RECEPTACLE
RES	RESISTOR
RGD	RIGID
RLF	RELIEF
RTNR	RETAINER
SCH	SOCKET HEAD
SCOPE	OSCILLOSCOPE
SCR	SCREW
SE	SINGLE END
SECT	SECTION
SEMICOND	SEMICONDUCTOR
SHLD	SHIELD
SHLDR	SHOULDERED
SKT	SOCKET
SL	SLIDE
SLFLKG	SELF-LOCKING
SLVG	SLEEVING
SPR	SPRING
SQ	SQUARE
SST	STAINLESS STEEL
STL	STEEL
SW	SWITCH
T	TUBE
TERM	TERMINAL
THD	THREAD
THK	THICK
TNSN	TENSION
TPG	TAPPING
TRH	TRUSS HEAD
V	VOLTAGE
VAR	VARIABLE
W/	WITH
WSHR	WASHER
XFMR	TRANSFORMER
XSTR	TRANSISTOR

CROSS INDEX MFR. CODE NUMBER TO MANUFACTURER

MFR.CODE	MANUFACTURER	ADDRESS	CITY,STATE,ZIP
01295	TEXAS INSTRUMENTS, INC., SEMICONDUCTOR GROUP	P. O. BOX 5012	DALLAS, TX 75222
09353	C AND K COMPONENTS, INC.	103 MORSE STREET	WATERTOWN, MA 02172
22526	BERG ELECTRONICS, INC.	YOUK EXPRESSWAY	NEW CUMBERLAND, PA 17070
24931	SPECIALTY CONNECTOR CO., INC.	3560 MADISON AVE.	INDIANAPOLIS, IN 46227
71468	ITT CANNON ELECTRIC	666 E. DYER RD.	SANTA ANA, CA 92702
71590	CENTRALAB ELECTRONICS, DIV. OF GLOBE-UNION, INC.	5757 N. GREEN BAY AVE.	MILWAUKEE, WI 53201
71785	TRW ELECTRONIC COMPONENTS, CINCH CONNECTOR OPERATIONS	1501 MORSE AVE.	ELK GROVE VILLAGE, IL 60007
72765	DRAKE MFG. CO.	4626 N. OLCOTT AVE.	HARWOOD HEIGHTS, IL 60656
73743	FISCHER SPECIAL MFG. CO.	446 MORGAN ST.	CINCINNATI, OH 45206
75915	LITTELFUSE, INC.	800 E. NORTHWEST HWY	DES PLAINES, IL 60016
78189	ILLINOIS TOOL WORKS, INC. SHAKEPROOF DIVISION	ST. CHARLES ROAD	ELGIN, IL 60120
79807	WROUGHT WASHER MFG. CO.	2100 S. O BAY ST.	MILWAUKEE, WI 53207
80009	TEKTRONIX, INC.	P. O. BOX 500	BEAVERTON, OR 97077
82389	SWITCHCRAFT, INC.	5555 N. ELSTON AVE.	CHICAGO, IL 60630
83385	CENTRAL SCREW CO.	2530 CRESCENT DR.	BROADVIEW, IL 60153
93351	GENERAL ELECTRIC CO., DISTRIBUTION ASSEMBLIES PRODUCT DEPT., SEATTLE PLANT	37 S. HUDSON ST.	SEATTLE, WA 98134

Fig. & Index No.	Tektronix Part No.	Serial/Model No. Eff	Dscont	Qty	1 2 3 4 5 Name & Description	Mfr Code	Mfr Part Number
1-	390-0244-00			1	CABINET SIDE:RIGHT	80009	390-0244-00
	----- -----			-	. CABINET SIDE INCLUDES:		
	214-0812-00			2	. LATCH ASSEMBLY:	80009	214-0812-00
	----- -----			-	. . EACH LATCH ASSY INCLUDES:		
-2	386-0226-00			1	. . PL,LATCH LKG:	80009	386-0226-00
-3	386-0227-00			1	. . PL,LATCH INDEX:	80009	386-0227-00
-4	214-0604-00			1	. . WASH.,SPG TNSN:0.26 ID X 0.47INCH OD	80009	214-0604-00
-5	214-0603-01			1	. . PIN,SECURING:0.27 INCH LONG	80009	214-0603-01
-6	390-0270-00			1	CABINET SIDE:LEFT	80009	390-0270-00
	----- -----			-	. CABINET SIDE INCLUDES:		
	214-0812-00			2	. LATCH ASSEMBLY:	80009	214-0812-00
	----- -----			-	. . EACH LATCH ASSY INCLUDES:		
-7	386-0226-00			1	. . PL,LATCH LKG:	80009	386-0226-00
-8	386-0227-00			1	. . PL,LATCH INDEX:	80009	386-0227-00
-9	214-0604-00			1	. . WASH.,SPG TNSN:0.26 ID X 0.47INCH OD	80009	214-0604-00
-10	214-0603-01			1	. . PIN,SECURING:0.27 INCH LONG	80009	214-0603-01
-11	390-0280-00			1	CABINET,BOTTOM:	80009	390-0280-00
	----- -----			-	. CABINET BOTTOM INCLUDES:		
	214-0812-00			4	. LATCH ASSEMBLY:	80009	214-0812-00
	----- -----			-	. . EACH LATCH ASSY INCLUDES:		
-12	386-0226-00			1	. . PL,LATCH LKG:	80009	386-0226-00
-13	386-0227-00			1	. . PL,LATCH INDEX:	80009	386-0227-00
-14	214-0604-00			1	. . WASH.,SPG TNSN:0.26 ID X 0.47INCH OD	80009	214-0604-00
-15	214-0603-01			1	. . PIN,SECURING:0.27 INCH LONG	80009	214-0603-01
-16	348-0073-00			2	. SPT PIVOT,FLIP:LEFT FRONT,RIGHT REAR	80009	348-0073-00
					(ATTACHING PARTS FOR EACH)		
-17	211-0532-00			2	. SCREW,MACHINE:6-32 X 0.75 INCH,FILH STL	83385	OBD
-18	210-0457-00			2	. NUT,PLAIN,EXT W:6-32 X 0.312,INCH,STL	83385	OBD
					- - - * - - -		
-19	348-0208-00			2	. FOOT,CABINET:LEFT FRONT,RIGHT REAR	80009	348-0208-00
-20	348-0074-00			2	. SPT PIVOT,FLIP:RIGHT FRONT,LEFT REAR	80009	348-0074-00
					(ATTACHING PARTS FOR EACH)		
-21	211-0532-00			2	. SCREW,MACHINE:6-32 X 0.75 INCH,FILH STL	83385	OBD
-22	210-0457-00			2	. NUT,PLAIN,EXT W:6-32 X 0.312,INCH,STL	83385	OBD
					- - - * - - -		
-23	348-0207-00			2	. FOOT,CABINET:RIGHT FRONT,LEFT REAR	80009	348-0207-00
-24	348-0275-00			1	FLIPSTAND,CAB:	80009	348-0275-00
-25	200-0728-00			2	COV,HANDLE END:	80009	200-0728-00
-26	367-0116-00			1	HANDLE,CARRYING:	80009	367-0116-00
					(ATTACHING PARTS)		
-27	212-0597-00			4	SCREW,MACHINE:10-32X0.355X0.50",SHLDR,STL	93351	A7148516P2
-28	386-1624-00			2	PL,RET.,HANDLE:	80009	386-1624-00
-29	386-1283-00			2	PLATE,HDL MTG:PLASTIC	80009	386-1283-00
					- - - * - - -		
-30	----- -----			1	CKT BOARD ASSY:CONTROL(SEE EPL)		
					(ATTACHING PARTS)		
-31	211-0008-00			7	SCREW,MACHINE:4-40 X 0.25 INCH,PNH STL	83385	OBD
					- - - * - - -		
	----- -----			-	. CKT BOARD ASSY INCLUDES:		
-32	131-0608-00			61	. CONTACT,ELEC:0.365 INCH LONG	22526	47357
-33	136-0237-00			3	. SOCKET,SEMICOND:8 CONTACT,ROUND	71785	133-98-12-062
-34	136-0220-00			1	. SOCKET,PLUG-IN:3 CONTACT,SQUARE	71785	133-23-11-034
-35	136-0260-02			15	. SOCKET,SEMICOND:16 CONTACT,LOW CLEARANCE	01295	C931602
-36	136-0269-02			14	. SOCKET,SEMICOND:14 CONTACT,LOW CLEARANCE	01295	C931402
-37	136-0432-00			3	. SOCKET,PLUG-IN:	71785	133-59-02-011
-38	260-1614-00			1	. SWITCH,PUSH:	71590	2KCM0700001266
-39	361-0384-00			14	. SPACER,PB SW:0.133 INCH LONG	80009	361-0384-00
-40	366-1162-00			6	PUSHBUTTON:BLANK,GRAY PLASTIC	80009	366-1162-00
-41	366-1161-00			1	PUSHBUTTON:BLANK,LIGHT GRAY PLASTIC	80009	366-1161-00
-42	260-1615-00			1	SWITCH,TOGGLE:DPDT,5A,115VAC	09353	7318
					(ATTACHING PARTS)		
-43	210-0940-00			1	WASHER,FLAT:0.25 ID X 0.375 INCH OD,STL	79807	OBD
					- - - * - - -		

Fig. & Index No.	Tektronix Part No.	Serial/Model No. Eff	Dscont	Qty	1 2 3 4 5 Name & Description	Mfr Code	Mfr Part Number
1-44	136-0279-00			1	SOCKET,LIGHT:WITH HARDWARE	72765	5160-458-GREEN
-45	426-0568-00			7	FR,PUSHBUTTON:PLASTIC	80009	426-0568-00
-46	333-1830-01			1	PANEL,FRONT:	80009	333-1830-01
					(ATTACHING PARTS)		
-47	210-0457-00			3	NUT,PLAIN,EXT W:6-32 X 0.312,INCH,STL	83385	OBD
					- - - * - - -		
-48	220-0449-00			2	NUT,SLEEVE:4-40X0.188X0.50 INCH,HEX.BRS	80009	220-0449-00
					(ATTACHING PARTS)		
-49	211-0101-00			1	SCREW,MACHINE:4-40 X 0.25" 100 DEG,FLH STL	83385	OBD
					- - - * - - -		
-50	200-0935-00			1	BASE,LAMPHOLDER:0.29 OD X 0.19" L,BK PLSTC	80009	200-0935-00
-51	378-0602-00			1	LENS,LIGHT:GREEN	80009	378-0602-00
-52	352-0157-00			1	LAMPHOLDER:WHITE PLASTIC	80009	352-0157-00
-53	129-0404-00			5	POST,ELEC-MECH:4-40X0.188 HEX. X0.853" L	80009	129-0404-00
					(ATTACHING PARTS FOR EACH)		
-54	210-0586-00			1	NUT,PLAIN,EXT W:4-40 X 0.25 INCH,STL	78189	OBD
					- - - * - - -		
-55	----- -----			1	TRANSFORMER:(SEE T10 EPL)		
					(ATTACHING PARTS)		
-56	211-0553-00			4	SCREW,MACHINE:6-32 X 1.50 INCH,PNH STL	83385	OBD
-57	210-0457-00			3	NUT,PLAIN,EXT W:6-32 X 0.312,INCH,STL	83385	OBD
-58	210-0202-00			1	TERMINAL,LUG:SE #6	78189	2104-06-00-2520N
-59	210-0408-00			1	NUT,PLAIN,HEX.:6-32 X 0.312 INCH,BRS	73743	3040-402
					- - - * - - -		
-60	179-2092-00			1	WIRING HARNESS:	80009	179-2092-00
-61	343-0089-00			4	CLAMP,LOOP:LARGE	80009	343-0089-00
-62	----- -----			1	CKT BOARD ASSY:POWER SUPPLY(SEE EPL)		
					(ATTACHING PARTS)		
-63	211-0008-00			4	SCREW,MACHINE:4-40 X 0.25 INCH,PNH STL	83385	OBD
					- - - * - - -		
	----- -----			-	. CKT BOARD ASSY INCLUDES:		
-64	131-0608-00			14	. CONTACT,ELEC:0.365 INCH LONG	22526	47357
-65	136-0183-00			2	. SOCKET,SEMICOND:3 PIN	80009	136-0183-00
-66	136-0220-00			5	. SOCKET,PLUG-IN:3 CONTACT,SQUARE	71785	133-23-11-034
-67	136-0235-00			3	. SOCKET,SEMICOND:6 CONTACT,ROUND	71785	133-96-12-062
-68	----- -----			3	TRANSISTOR:(SEE Q138,Q198 & Q168 EPL)		
					(ATTACHING PARTS FOR EACH)		
-69	211-0097-00			1	SCREW,MACHINE:4-40 X 0.312 INCH,PNH STL	83385	OBD
-70	210-1171-00			1	WASHER,SHLDR:0.12 ID X 0.143"OD,PLSTC	80009	210-1171-00
-71	210-0586-00			1	NUT,PLAIN,EXT W:4-40 X 0.25 INCH,STL	78189	OBD
-72	342-0163-00			1	INSULATOR,PLATE:XSTR,0.675 X 0.625 X 0.001"	80009	342-0163-00
					- - - * - - -		
-73	441-1243-00			1	CHASSIS:MAIN	80009	441-1243-00
					(ATTACHING PARTS)		
-74	211-0541-00			4	SCREW,MACHINE:6-32 X 0.25"100 DEG,FLH STL	83385	OBD
-75	210-0457-00			4	NUT,PLAIN,EXT W:6-32 X 0.312,INCH,STL	83385	OBD
					- - - * - - -		
-76	161-0066-00			1	CABLE ASSY,PWR:3 WIRE,98 INCH LONG	80009	161-0066-00
-77	----- -----			1	FILTER,RAD INT:(SEE FL101 EPL)		
					(ATTACHING PARTS)		
-78	211-0012-00			2	SCREW,MACHINE:4-40 X 0.375 INCH,PNH STL	83385	OBD
-79	210-0994-00			2	WASHER,FLAT:0.125 ID X 0.25" OD,STL	83385	OBD
-80	210-0586-00			2	NUT,PLAIN,EXT W:4-40 X 0.25 INCH,STL	78189	OBD
					- - - * - - -		
-81	131-0569-00			1	CONNECTOR,RCPT:25 CONTACT,FEMALE	71468	DB25S
					(ATTACHING PARTS)		
-82	131-0890-00			2	CONNECTOR,LOCK:4-40X0.312X0.188" HEX.,STL	71785	D20418-2
-83	210-0054-00			2	WASHER,LOCK:SPLIT,0.118 ID X 0.212"OD STL	83385	OBD
					- - - * - - -		
-84	210-0202-00			1	TERMINAL,LUG:SE #6	78189	2104-06-00-2520N
					(ATTACHING PARTS)		
-85	211-0504-00			1	SCREW,MACHINE:6-32 X 0.25 INCH,PNH STL	83385	OBD
-86	210-0408-00			1	NUT,PLAIN,HEX.:6-32 X 0.312 INCH,BRS	73743	3040-402
					- - - * - - -		

Fig. & Index No.	Tektronix Part No.	Serial/Model No. Eff	Dscont	Qty	1 2 3 4 5 Name & Description	Mfr Code	Mfr Part Number
1-87	352-0076-00			2	FUSEHOLDER:W/HARDWARE	75915	342012
-88	260-1300-02			2	SWITCH,SLIDE:	82389	11A-1389
					(ATTACHING PARTS FOR EACH)		
-89	211-0007-00			2	SCREW,MACHINE:4-40 X 0.188 INCH,PNH STL	83385	OBD
					- - - * - - -		
-90	131-0955-00			3	CONNECTOR,RCPT,:BNC,FEMALE	24931	28JR200-1
					(ATTACHING PARTS FOR EACH)		
-91	210-0255-00			1	TERMINAL,LUG:0.391" ID INT TOOTH	80009	210-0255-00
					- - - * - - -		
-92	426-1137-00			1	FRAME:	80009	426-1137-00
-93	175-1549-00			1	CABLE,SP,ELEC:	80009	175-1549-00
					(ATTACHING PARTS)		
-94	131-0890-00			2	CONNECTOR,LOCK:4-40X0.312X0.188" HEX.,STL	71785	D20418-2
-95	210-0994-00			2	WASHER,FLAT:0.125 ID X 0.25" OD,STL	83385	OBD
-96	210-0201-00			2	TERMINAL,LUG:SE #4	78189	2104-04-00-2520N
					- - - * - - -		
					INCLUDED ACCESSORIES		
	012-0486-00			1	CABLE ASSY,SP:8 FOOT LONG	80009	012-0486-00
	021-0141-00			1	INTERFACE:10 BUFFER	80009	021-0141-00
	070-1888-00			1	MANUAL,TECH:INSTRUCTION	80009	070-1888-00

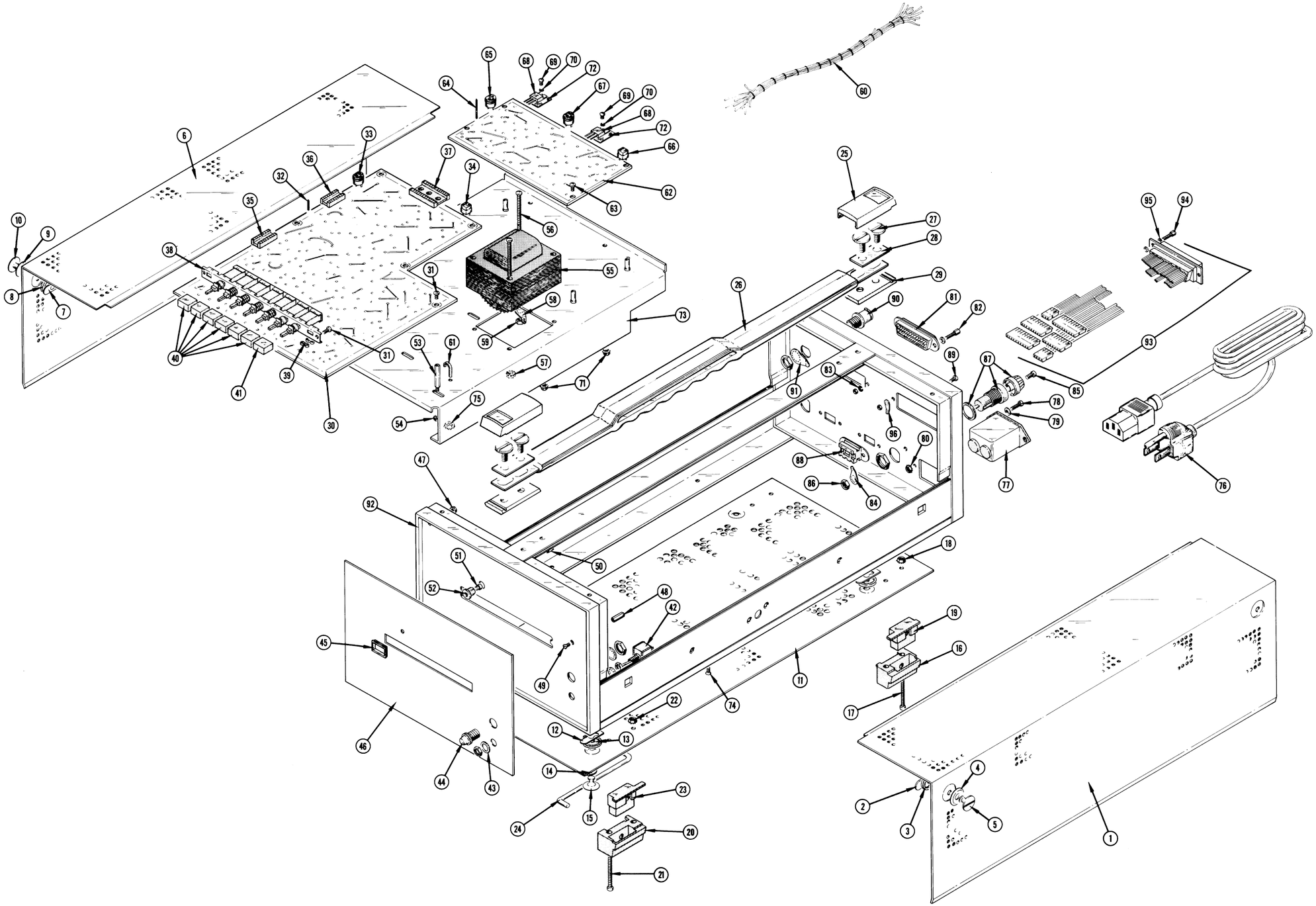

FIG. 1 EXPLODED

1350 MDU

TEKTRONIX®
committed to technical excellence

MANUAL CHANGE INFORMATION

PRODUCT GENERAL

CHANGE REFERENCE S23351

DATE 4-10-75

CHANGE:	DESCRIPTION

POWER CORD CHANGES

The 1974 National Electrical Code permits the use of IEC (International Electrotechnical Commission) power cord color codes. As production permits, we are changing the entire Tektronix product line to comply with IEC power cord color code requirements. As a result, the power cord on Tektronix instruments may conform to either IEC or the older NEC requirements. The change consists of the following:

Conductor	NEC	IEC
Line	Black	Brown
Neutral	White	Light Blue*
Safety Earth	Green w/Yellow Stripe	Green w/Yellow Stripe

*Tinned copper conductor.