PRELIMINARY INSTRUCTION MANUAL

TYPE L-10A SPECTRUM ANALYZER

165

070-458

WARRANTY

All Tektronix instruments are warranted against defective materials and workmanship for one year. Tektronix transformers, manufactured in our own plant, are warranted for the life of the instrument.

Any questions with respect to the warranty mentioned above should be taken up with your Tektronix Field Engineer.

Tektronix repair and replacement-part service is geared directly to the field, therefore all requests for repairs and replacement parts should be directed to the Tektronix Field Office or Representative in your area. This procedure will assure you the fastest possible service. Please include the instrument Type and Serial number with all requests for parts or service.

Specifications and price change privileges reserved.

Tektronix, Inc.
S.W. Millikan Way • P. O. Box 500 • Beaverton, Oregon • Phone MI 4-0161 • Cables: Tektronix

Because this is a new instrument the instruction manual has not yet been completed. Please fill out and return this card so that we may send the permanent manual to you. The information below will be used as the return label. **Please print clearly or type.**

(do not tear off)

Tektronix, Inc.
P. O. Box 500
Beaverton, Oregon

Co. Name _____

Address _____

City _____ State _____

Att/Dept. _____

Tek Inst. Type _____ S/N _____

001-802 D

Postage
Will Be Paid
by
Addressee

No
Postage Stamp
Necessary
If Mailed in the
United States

BUSINESS REPLY CARD

First Class Permit No. 61, Sec. 34.9, P.L. & R., Beaverton, Oregon

TEKTRONIX, INC.
P. O. BOX 500
BEAVERTON, OREGON

ATTEN: Customer Service Manuals Dept.

TYPE L-10A

PRELIMINARY INSTRUCTIONS

NOTE

This is a preliminary instruction manual. It is not complete and may contain errors. We will send you the permanent instruction manual as soon as it is completed. Be sure to fill out and send us the attached card so that we can send the permanent manual directly to the user of the instrument.

CHARACTERISTICS

Introduction

The Type L-10A Spectrum Analyzer plug-in unit is designed for use with Tektronix Type 530-, 540-, 550-, and *580-Series Oscilloscopes. The Type L-10A Spectrum Analyzer is tunable over the frequency range of 1 mc to 36 mc. The frequency "window" (dispersion) of the display is variable in eight calibrated steps of 0.1 to 20 kc in a 1, 2, 5 sequence.

The Type L-10A displays the frequency distribution of an applied signal (or signals) along the horizontal axis of the crt while the signal energy of the signal is displayed on the vertical axis.

Specifications

Frequency Range	Continuously tunable from 1mc to 36mc.
Dial Accuracy	±1% of dial reading ±100kc.

*A plug-in adapter must be used with 580-Series Oscilloscopes.

Dispersion (Width of frequency "window".)	100 cps to 20 kc in eight calibrated steps in a 1, 2, 5 sequence.
Dispersion Accuracy	±5%
Sensitivity	Approximately -100 dbm at 10 cps resolution. (0 dbm equals 1 milliwatt)
Sweep Rate	Determined by oscilloscope Time/Cm switch. Typically 1 Sec/Cm to 5 mSec/Cm.
Resolution	10 cps to 1 kc depending on setting RESOLUTION and DISPERSION-KC switch.
Maximum Input Power	-20 dbm with R-F ATTEN switches OFF +24 dbm with R-F ATTEN switches ON
Frequency Stability	Local Oscillator: 100 ppm/°F. 100 ppm/volt of line voltage I.F. Amplifier: 2 ppm/°F. 1 ppm/volt of line voltage
Display Flatness	±1 db
Vertical Display (with 6 cm screen)	LOG: 50 db LIN: 26 db LIN X10: 26 db
R-F ATTEN	51 db, ±0.1db/db in 1 db steps.
GAIN Control Range	60 db

OPERATING INFORMATION

Function of Controls and Connectors

FREQUENCY Control and Dial	Tunes the Spectrum Analyzer to the frequency to be displayed. The dial reading indicates the frequency at an accuracy of ±1% of reading ±100 kc.

FINE FREQUENCY	Provides a vernier adjustment as a supplement to the FREQUENCY control. Range of the FINE FREQUENCY control is approximately 20kc.
OSC connectors	OSC OUT (top connector) is the output of the tunable local oscillator in the Type L-10A. Output frequency is 61 mc to 97 mc. OSC IN (bottom connector) is the oscillator input connector to the mixer. When an external oscillator is used, it should be connected to this connector.
VERTICAL POSITION	Varies the position of the trace on the crt screen. Normally set where the trace is aligned with the bottom graticule line.
R-F ATTEN	Six toggle switches that may be individually switched in or out to obtain from 1 to 51 db attenuation. The attenuators are useful for making comparative amplitude measurements.
EXT OSC-INT OSC	Turns off the internal local oscillator in the EXT OSC position. To avoid interference, the local oscillator should be turned off when an external oscillator is used. In most other applications the switch should be set INT OSC.

DISPLAY FUNCTION	LOG: provides about a 50 db dynamic range in a six centimeter vertical display. LIN and LIN X10: both positions provide about a 26 db dynamic range with a six centimeter vertical display. The LIN X10 position is about 10 times more sensitive than the LIN position. VIDEO INPUT: permits a vertical input signal to be displayed on the oscilloscope for a conventional analog display of amplitude versus time. Input signal must be connected to the VIDEO INPUT connector.
GAIN	Varies the vertical amplitude of the display. Range is 60 db.
DISPERSION-KC	Sets the frequency width of the display. For example, in the 20 position the frequency "window" of the display is 20 kc wide. In the SEARCH position, the "window" is widened to permit less apparent selectivity with the FREQUENCY control.
COUPLED RESOLUTION (PULL TO VARY RESOLUTION)	Sets the resolving power of the display. That is, the ability to resolve between two signals that are near the same frequency.

INPUT 50Ω	Spectrum input connector. Characteristic input impedance is 50Ω.
VIDEO INPUT	Input connector for use when the DISPLAY FUNCTION switch is set to the VIDEO INPUT position. Permits an analog display of time versus signal amplitude.
INPUT 600Ω	Spectrum input connector. Serves the same function as the INPUT 50Ω connector. Characteristic input impedance is 600Ω.
SWEEP INPUT	Jack for applying the sawtooth or sweep voltage of the oscilloscope. This coupling must be made when the Type L-10A is used as a spectrum analyzer (i.e. in the LOG, LIN and LIN X10 positions of the DISPLAY FUNCTION switch).
100V-150V SAWTOOTH (rear panel)	This switch should be set to correspond to the peak sawtooth output voltage of the oscilloscope. See the instruction manual of the oscilloscope to determine the sawtooth voltage.

First-Time Operation

The following procedure provides a display with the Type L-10A Spectrum Analyzer and demonstrates the function of various front-panel controls. The only equipment required for this procedure is

an r.f. signal generator that will produce a signal within the tunable range of the analyzer.

1. Before inserting the Type L-10A Spectrum Analyzer into the oscilloscope, check the oscilloscope instruction manual to determine the nominal amplitude of the sweep or sawtooth output voltage -- it will be either 100 or 150 volts. Then, on the rear of the plug-in unit, set the slide switch to 100 or 150, whichever is appropriate.

2. Insert the Spectrum Analyzer into the oscilloscope, turn on the power and allow about 30 minutes for warm up.

3. Connect a patch cord between the oscilloscope Sawtooth Output connector and the SWEEP INPUT jack of the Spectrum Analyzer.

CAUTION

Be careful when making this connection since the sawtooth voltage can give a slight shock.

4. Set the Time/Cm of the oscilloscope to 5 mSec. (In actual practice the oscilloscope Time/Cm switch may be set to any desired setting from 1 Sec/Cm to 5 mSec/Cm.)

5. Set the front panel controls of the Type L-10A as follows:

POSITION	Midrange
GAIN	Fully ccw
DISPLAY FUNCTION	LIN
R-F ATTEN	All OFF
DISPERSION-KC	SEARCH
COUPLED RESOLUTION	Same as DISPERSION-KC
EXT-INT OSC	INT OSC

6. Set the oscilloscope for a free-running sweep.

7. At this point there should be a trace displayed on the oscilloscope. If not, adjust the POSITION control of the Spectrum Analyzer along with the INTENSITY control of the oscilloscope. Also, check the setting of the HORIZONTAL DISPLAY or MODE switch of the oscilloscope. It should be set to 'A' or NORMAL.

8. Once a trace is obtained on the crt, set the FOCUS, ASTIGMATISM and INTENSITY controls of the oscilloscope for a well-defined display.

9. Set the HORIZONTAL POSITION control of the oscilloscope so that the trace starts on the first graticule line.

10. Apply a signal from a signal generator to either the INPUT 50Ω or INPUT 600Ω connector.

11. Set the frequency of the generator at a frequency between 1 and 36 mc.

12. Slowly rotate the FREQUENCY control of the L-10A to bring the signal onto the screen. (Use the FINE FREQUENCY control as a vernier.)

13. Set the DISPERSION-KC to 20 and notice that the signal widens. (Use the FINE FREQUENCY control to bring the signal on screen if necessary.) The frequency distribution of the display is now 2 kc per centimeter (1/10 of DISPERSION-KC setting).

Applied Signal Precautions

Signals applied to the INPUT 50Ω connector should be connected through a 50-ohm coaxial cable with a Type N male connector. Unshielded connections will tend to pick up stray unwanted signals and cause a confusing display. Before applying any signals to the INPUT 50Ω connector, make sure the signal energy is less than that specified under "Characteristics". Otherwise, the Spectrum Analyzer may be overdriven.

The characteristic input impedance (Z_o) at the INPUT 50Ω connector is nominally 50 ohms. The dc input resistance of this connector is in the order of several hundred ohms. Proper matching between the device under test and the Spectrum Analyzer may be necessary to prevent adverse loading effects on the device under test.

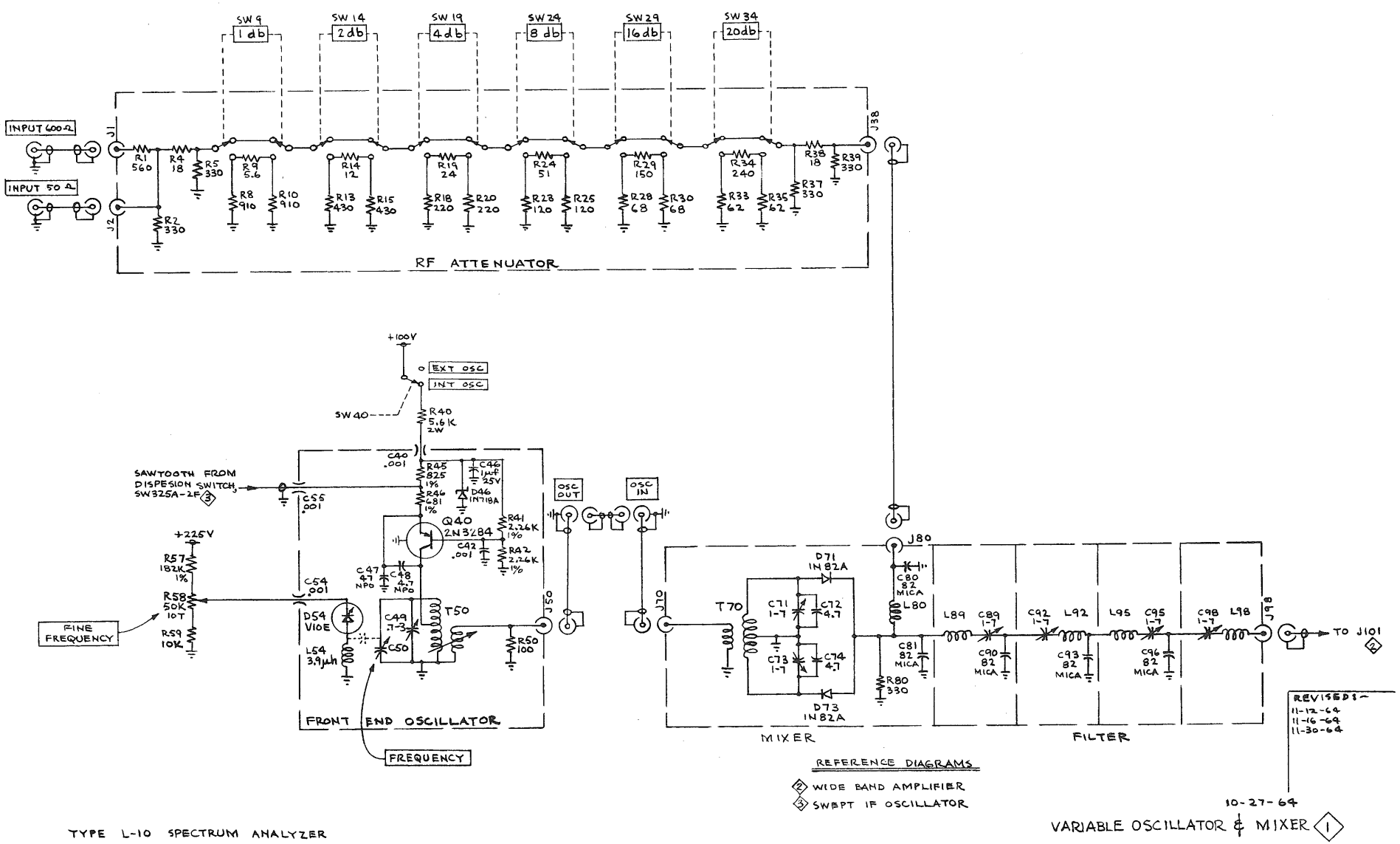

TYPE L-10 SPECTRUM ANALYZER

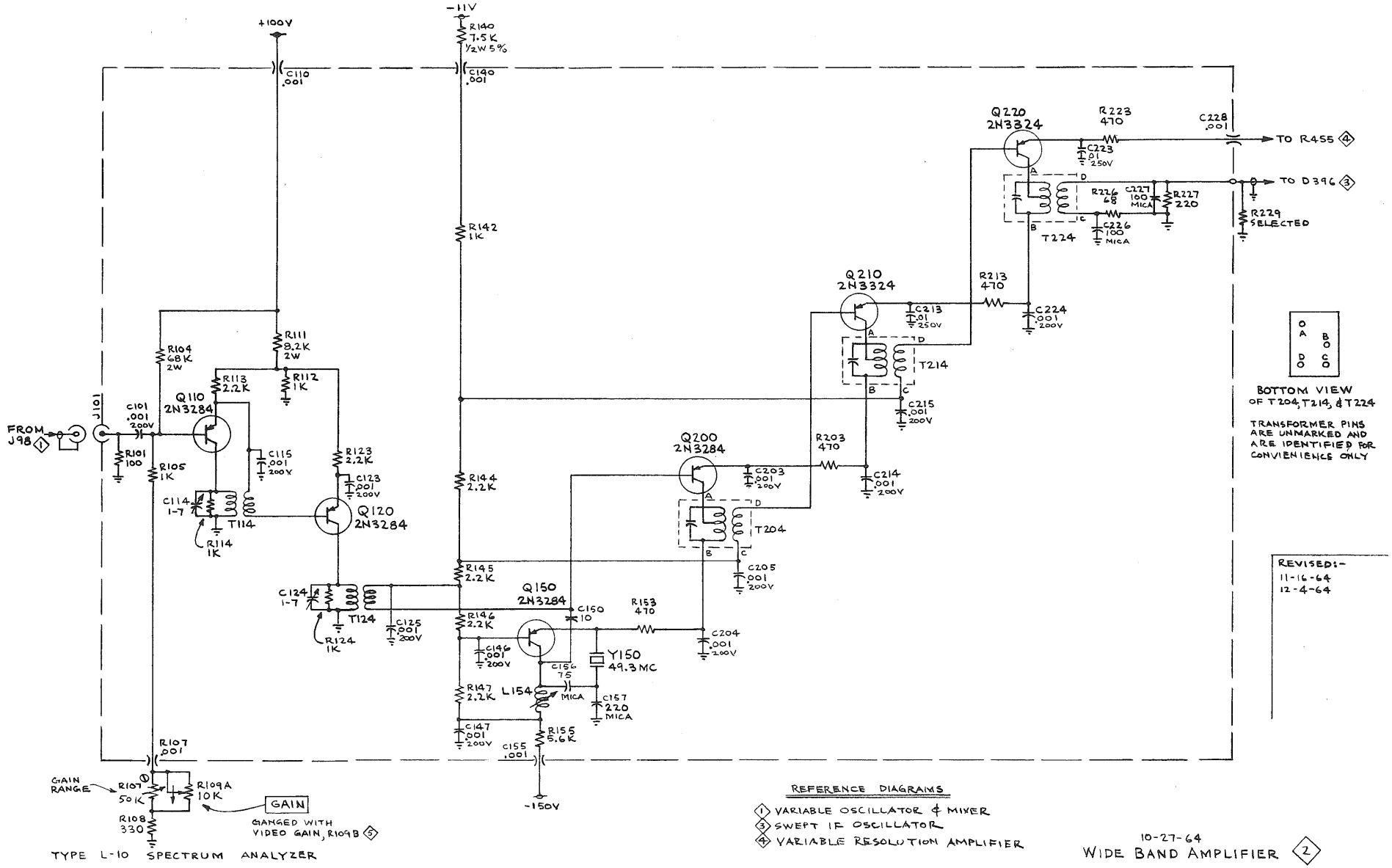

REFERENCE DIAGRAMS

1 VARIABLE OSCILLATOR & MIXER
3 SWEPT IF OSCILLATOR
4 VARIABLE RESOLUTION AMPLIFIER

TYPE L-10 SPECTRUM ANALYZER

10-27-64
WIDE BAND AMPLIFIER 2

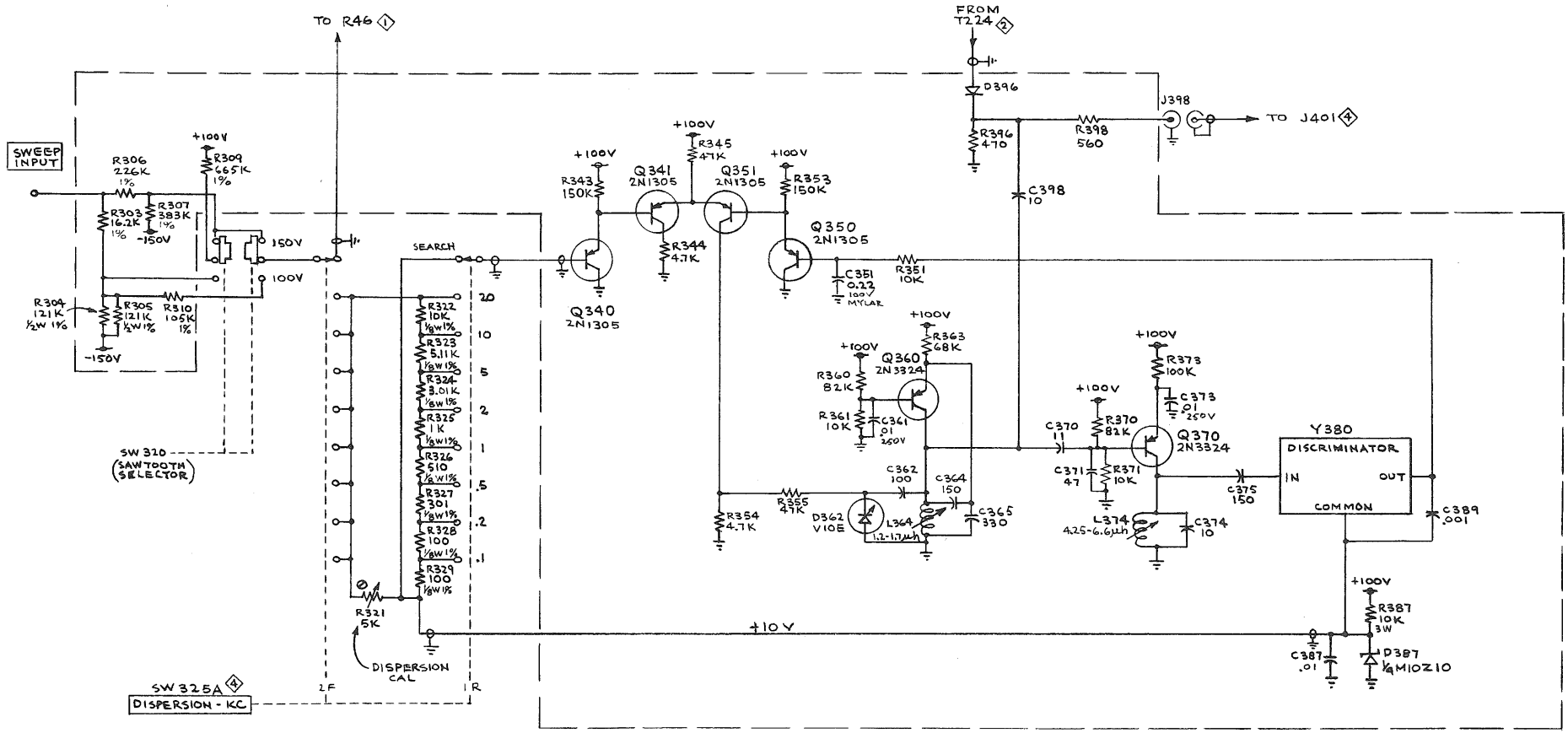

REFERENCE DIAGRAMS

① VARIABLE OSCILLATOR & MIXER
② WIDE BAND AMPLIFIER
④ VARIABLE RESOLUTION AMPLIFIER

REVISED:-
11-12-64
11-16-69
12-4-64

10-27-64

TYPE L-10 SPECTRUM ANALYZER

SWEPT IF OSCILLATOR ③

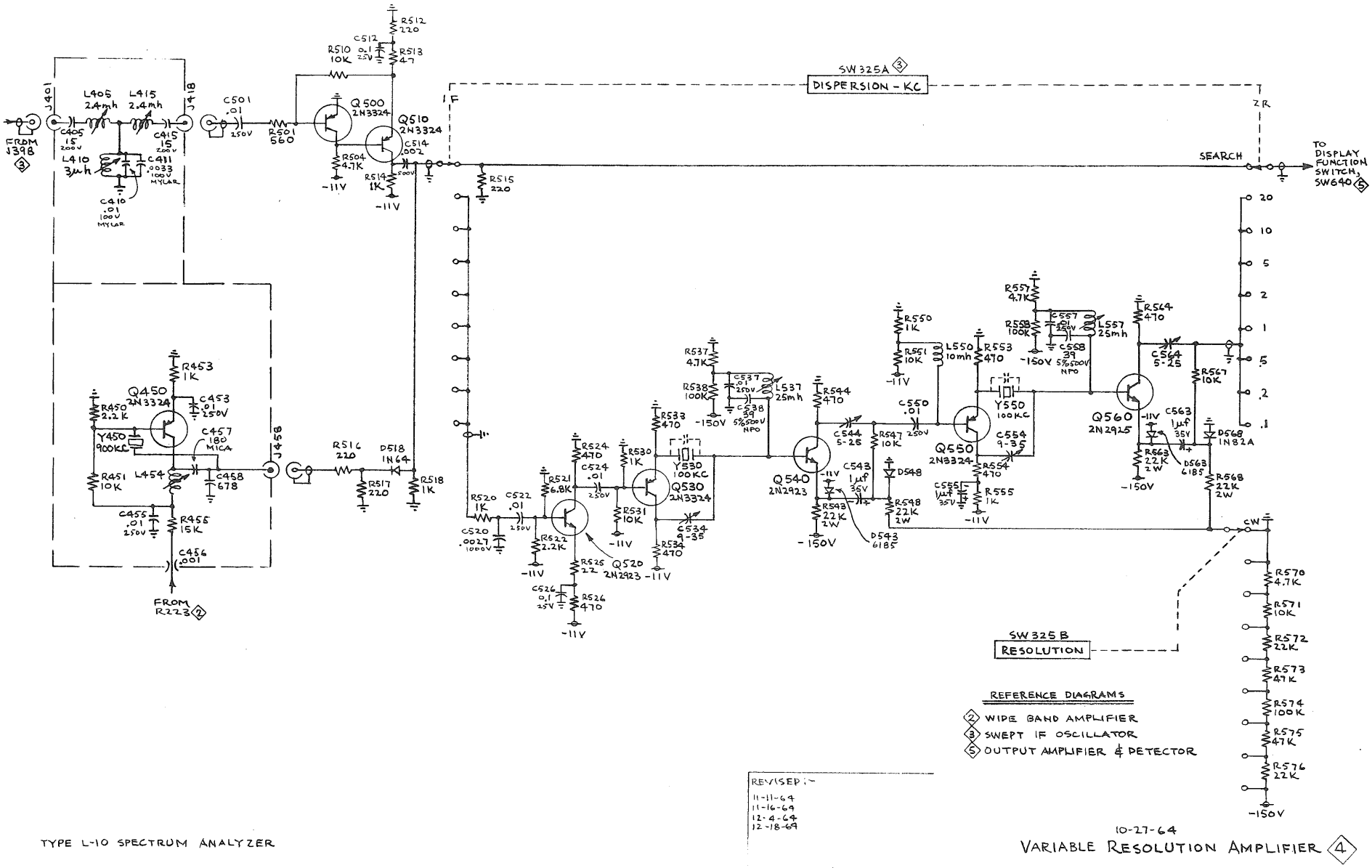

REFERENCE DIAGRAMS

2 WIDE BAND AMPLIFIER
3 SWEPT IF OSCILLATOR
5 OUTPUT AMPLIFIER & DETECTOR

REVISED:-
11-11-64
11-16-64
12-4-64
12-18-69

TYPE L-10 SPECTRUM ANALYZER

10-27-64

VARIABLE RESOLUTION AMPLIFIER 4

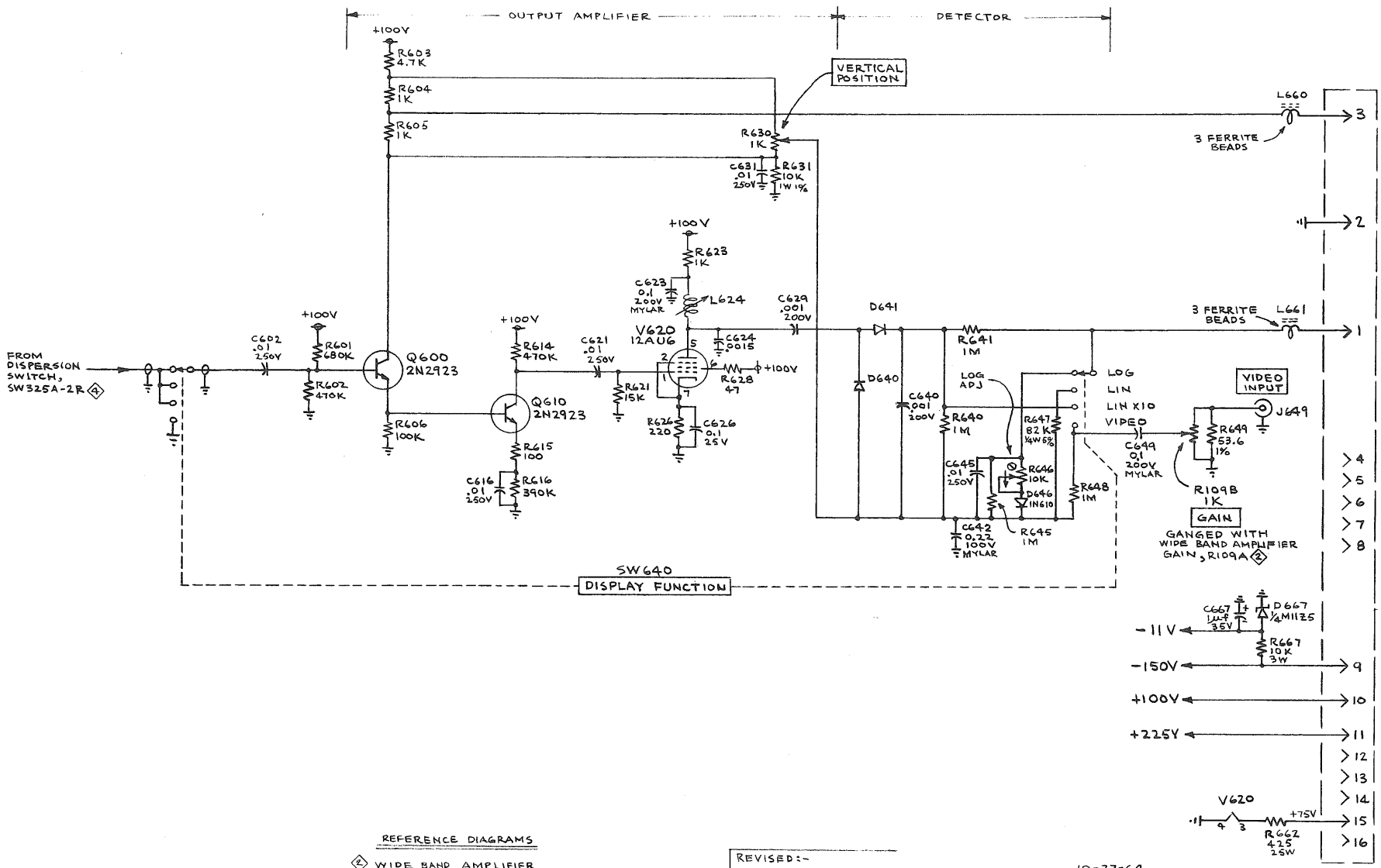

REFERENCE DIAGRAMS

2 WIDE BAND AMPLIFIER

4 VARIABLE RESOLUTION AMPLIFIER

REVISED:-
11-12-64
11-16-64
12-4-64

TYPE L-10 SPECTRUM ANALYZER

10-27-64

OUTPUT AMPLIFIER AND DETECTOR 5