Tektronix®

COMMITTED TO EXCELLENCE

5B13N

TIME BASE

INSTRUCTION MANUAL

WARRANTY

All TEKTRONIX instruments are warranted against defective materials and workmanship for one year. Any questions with respect to the warranty should be taken up with your TEKTRONIX Field Engineer or representative.

All requests for repairs and replacement parts should be directed to the TEKTRONIX Field Office or representative in your area. This will assure you the fastest possible service. Please include the instrument Type Number or Part Number and Serial Number with all requests for parts or service.

Specifications and price change privileges reserved.

TABLE OF CONTENTS

Fig. 1-1. 5B13N Time Base.

SECTION 1
5B13N SPECIFICATION

Introduction

The 5B13N Time Base is a plug-in unit for generating a sweep in Tektronix 5100-series oscilloscopes. The unit features solid-state circuitry and simplicity of front-panel controls. The 5B13N provides sweep rates from 1 microsecond per division to 0.1 second per division in decade steps; a multiplier control permits variable adjustment between steps from 1 microsecond per division to 1 second per division. Additionally, the unit accepts external signals to be displayed in lieu of the time-base sweep. Deflection factor is 50 millivolts per division, variable to at least 5 volts per division.

In this manual, the word Volts/Div or division refers to major graticule division.

The following electrical characteristics apply over an ambient temperature range of 0° to +50°C. Refer to the 5100-series Oscilloscope System manual for environmental specifications.

TABLE 1-1

Characteristic	Performance Requirement	Supplemental Information
Sweep Rate		
Calibrated Range	1 microsecond/division to 100 milliseconds/division.	6 decade steps. Multiplier extends range to 1 second/division.
Displayed Accuracy		
Over Center 8 Divisions	Within 5% with Multiplier at X1.	
Over Any 2-Division Interval Within Center 8 Divisions	Within 8%.	
MULTIPLIER Range		At least 10:1.
POSITION Range		Any portion of the sweep can be positioned on screen.
Triggering Requirements		
Internal (AC Coupled)	At least 1 division, 10 hertz to 1 megahertz.	
External (AC Coupled)	At least 250 millivolts, 50 hertz to 100 kilohertz.	
External Trigger Input		
Input R and C		100 kilohms, paralleled by ≈1000 picofarads.
Maximum Operational Input Voltage	+ and − 2 volts.	
Maximum Safe Input Voltage		200 volts DC, 50 volts AC (peak-to-peak) to 100 kilohertz.

Characteristic	Performance Requirement	Supplemental Information
LEVEL Range		
Internal (AC Coupled)		6 divisions, peak to peak, for both + and − slope.
External (AC Coupled)		1.5 volt peak to peak, for both + and − slope.
Amplifier Mode		
Deflection Factor		
Calibrated	50 millivolts/division with Multiplier in X1.	
Accuracy	Within 5% calibrated	
MULTIPLIER Range		At least 100:1. Extends deflection factor range to 5 volts per division.
Frequency Response		
Bandwidth (8 Divisions Reference)	DC to at least 100 kilohertz.	
Input		
Input R and C		Approximately 100 kilohms, paralleled by 1000 picofarads.
Useful Input Voltage		+ and − 50 volts.
Maximum Safe Input Voltage		50 volts (DC + peak AC).

Repackaging for Shipment

If the Tektronix instrument is to be shipped to a Tektronix Service Center for service or repair, attach a tag showing: owner (with address) and the name of an individual at your firm that can be contacted, complete instrument serial number and a description of the service required.

Save and re-use the package in which your instrument was shipped. If the original packaging is unfit for use or not available, repackage the instrument as follows:

Surround the instrument with polyethylene sheeting to protect the finish of the instrument. Obtain a carton of corrugated cardboard of the correct carton strength and having inside dimensions of no less than six inches more than the instrument dimensions. Cushion the instrument by tightly packing three inches of dunnage or urethane foam between carton and instrument, on all sides. Seal carton with shipping tape or industrial stapler.

The carton test strength for your instrument is 200 pounds.

SECTION 2
OPERATING INSTRUCTIONS

General

The 5B13N Time Base operates with a Tektronix 5100-series oscilloscope and is ready for use as it is received. It can be installed in any compartment of the oscilloscope, but is intended for principal use in the horizontal (right) compartment. If the instrument is used in one of the vertical compartments (for example, to provide a vertical sweep), there is no retrace blanking; however, if used in the right vertical (center) compartment, internal triggering is provided.

To install, align the upper and lower rails of the 5B13N with the plug-in compartment tracks and fully insert it (the plug-in panel must be flush with the oscilloscope panel). To remove, pull the release latch to disengage the 5B13N from the oscilloscope.

Controls and Connectors

DISPLAY	Applies logic levels to the oscilloscope system to select CHOP (button pushed in) or ALTernate (button out) time-shared switching between vertical plug-ins and amplifier channels.
POSITION	Positions trace or display.
SEC/DIV or VOLTS/DIV	
Time Base Mode	Time per major graticule division. Six pushbuttons allow selection of calibrated sweep rates from 1 μs/Div to 100 ms/Div in decade steps. MULTIPLIER control must be in X1 for indicated sweep rate.
Amplifier Mode	Volts per major graticule division. Provides a calibrated deflection factor of 50 mV/Div for external signals. MULTIPLIER control must be X1.
MULTIPLIER	Provides uncalibrated, continuously variable sweep rates between calibrated X1 and X10 positions. Provides uncalibrated, continuously variable deflection factor from calibrated X1 position. This control extends the sweep rate range to 1 second/division, or deflection factor range to at least 5 volts/division.
Triggering Source	LEFT: Selects the left vertical plug-in as the trigger signal source. RIGHT: Selects the right vertical plug-in as the trigger signal source. COMPOSITE (both the LEFT and RIGHT buttons pushed in): Selects the signal being displayed as the trigger signal source. LINE: Selects the line-frequency voltage as the trigger source. EXT: Selects the EXT INPUT as the trigger signal source.
NOTE *All triggering sources are AC coupled.*	
Triggering Mode	AUTO TRIG: If triggering signal is absent or occurs at a rate less than 20 hertz, the sweep generator reverts to a free-running mode (bright baseline). Button out selects Normal Triggered Mode.
Triggering LEVEL/SLOPE	Selects portion of triggering signal which starts the sweep.
EXT INPUT	Input for external trigger or deflection signals.

Basic Operation

This procedure is provided to aid in quickly obtaining the correct control settings to present a time-base display. Operation of other instruments in the system is described in the instruction manuals for those units.

1. Insert the unit all the way into the oscilloscope right plug-in compartment.

2. Turn the oscilloscope Intensity control fully counterclockwise and turn the Power on.

3. Set the 5B13N front-panel controls as follows:

DISPLAY	ALT (button out)
POSITION	Midrange
SEC/DIV	1 ms
MULTIPLIER	X1
Triggering	
Source	LEFT
Mode	AUTO TRIG
LEVEL/SLOPE	Midrange, + Slope

4. Adjust the Intensity control for normal viewing of the trace.

Triggering Source (A and B)

LEFT, RIGHT, or COMPOSITE. The LEFT and RIGHT buttons of the A and B TRIGGERING SOURCE switches permit selection of the triggering signal from either vertical plug-in unit. In addition, the A TRIGGERING SOURCE permits selection of the triggering signal from the signal being displayed (both LEFT and RIGHT buttons pushed in). This internal triggering normally provides the most convenient operation, because the sweep can be started at a selected point on a displayed signal.

NOTE

If the composite trigger mode is selected when this unit is installed in a 5403, the unit will trigger off the left vertical plug-in only.

Line. When the LINE button is pressed, a sample of the power-line frequency is connected to the Trigger Generator circuit. Line triggering is useful when the input signal is time-related to the line frequency. It is also useful for providing a stable display of a line-frequency component in a complex waveform.

External. An external signal connected to the EXT INPUT connector can be used to trigger the sweep when the EXT button is pressed. The external signal must be time-related to the displayed signal to produce a stable display. An external triggering signal can be used to provide a triggered display when the internal signal is too low in amplitude for correct triggering, or contains signal components on which it is not desired to trigger. It is also useful when signal tracing in amplifiers, phase-shift networks, wave-shaping circuits, etc. The signal from a single point in the circuit can be connected to the EXT INPUT connector through a signal probe or cable. The sweep is then triggered by the same signal at all times and allows examination of amplitude, time relationship, or waveshape changes of signals at various points in the circuit without resetting the triggering controls.

Triggering Level/Slope

The LEVEL control and Slope switch are combined in a single control. The Slope switch determines whether a sweep trigger is initiated on the positive-going or negative-going portion of the triggering signal, and the LEVEL control determines the voltage level on the triggering waveform at which the sweep is triggered.

When the Slope switch is in the + region, the display starts with the positive-going portion of the waveform; in the − region, the display starts with the negative-going portion of the waveform. When several cycles of a signal appear in the display, the setting of the Slope switch is often unimportant. However, if only a certain portion of a cycle is to be displayed, the setting of the Slope switch is important to provide a display which starts on the desired slope of the input signal.

NOTE

When this plug-in is used in a Tektronix 5403 oscilloscope the leading edge of the display will not be observed when using sweep rates faster than 1 µs.

Sweep Mode

Normal Triggered Mode. The Normal Triggered Mode (AUTO TRIG button out) provides a repetitive triggered display when the LEVEL control is correctly set and an adequate triggering signal is available. Otherwise, the sweep generating circuits remain off and there is no display.

Auto Mode and Bright Baseline. Operation in this mode (AUTO TRIG button pushed in) provides a repetitive triggered display when the triggering signal is occurring at a rate of 20 hertz or greater and the LEVEL control is correctly set. When the trigger repetition rate is less than about 20 hertz, or in the absence of an adequate triggering signal, the sweep generator free runs at the sweep rate selected by the SEC/DIV switch and MULTIPLIER control to produce a reference trace. When an adequate triggering signal is again applied, the free-running condition ends and the sweep generator is triggered to produce a stable display.

Selecting Sweep Rate

The SEC/DIV switch allows selection of six basic sweep rates from one microsecond/division to 100 milliseconds/division. The MULTIPLIER control provides variable multiplication from X1 to X10 of the selected time per division, extending the sweep rate range to one second/division (100 milliseconds/division X10). When selecting sweep rates, set the MULTIPLIER to X1 and select a rate that either provides adequate sweep speed for the display or is slightly faster than desired. To decrease the sweep speed, turn the MULTIPLIER control counterclockwise as needed, increasing the time per division as indicated on the knob skirt.

Amplifier Mode

In some applications, it is desirable to display one signal versus another (X-Y) rather than against time (Y–T). The Amplifier Mode provides a means for applying an external signal to the oscilloscope deflection system for this type of display.

When the VOLTS/DIV button (50 mV EXT) is pushed in, the sweep generator circuits are disabled. The external signal is routed through the MULTIPLIER potentiometer and DC coupled to the oscilloscope deflection system. A calibrated deflection factor of 50 millivolts/division is provided in the X1 position of the MULTIPLIER control. The MULTIPLIER control provides a continuously variable 1X to at least 100X attenuation of the input signal, extending the deflection factor range to at least 5 volts per division.

SECTION 3
CIRCUIT DESCRIPTION

Introduction

This section of the manual contains an electrical description of the circuits in the 5B13N Time Base plug-in unit. An overall block diagram and a complete schematic diagram are given on pullout pages at the rear of the manual.

BLOCK DIAGRAM DESCRIPTION

The Input Switching permits the sweep-triggering signal to be selected from any one of four sources. All triggering signals are AC coupled to the Sweep Generator circuit.

The Sweep Generator circuit produces a negative-going sawtooth voltage which is amplified in the oscilloscope mainframe to provide sweep deflection on the CRT. Positive- and negative-going gates are produced at the same time the sawtooth is being produced to perform sweep-related functions such as CRT sweep-retrace blanking, etc. The Sweep Generator can be operated either in the normal triggered mode or the auto-triggered (bright baseline) mode.

Externally applied signals may be displayed instead of a time-base sweep. For this mode of operation, the 50 mV EXT button of the SEC/DIV OR VOLTS/DIV switch is pushed in, providing a direct input to the mainframe and at the same time disabling the Sweep Generator. The front-panel MULTIPLIER control performs as a variable attenuator. Positioning current for either the sweep signals or the display signals is provided by the POSITION control.

DETAILED CIRCUIT DESCRIPTION

Display Switching

Alternate or Chopped time-shared switching of the vertical plug-ins and amplifier channels is selected at the time-base unit. The DISPLAY switch, S80, selects either CHOP (button pushed in) or ALT (button out).

Trigger Input

The source from which a sweep-triggering signal is obtained is selected by TRIGGERING SOURCE switch S10. The triggering signal may be selected from internal, line, or external sources. The internal triggering signal is obtained from either the left vertical plug-in, the right vertical plug-in, or from both as a composite triggering signal. Amplitude of the internal triggering signal is about 250 millivolts per division of display. The line triggering signal is a sample of the line frequency obtained from the power supply circuit of the associated oscilloscope. External triggering signals are applied via J1, EXT INPUT.

All triggering signals are capacitive (AC) coupled through C10. C10 blocks any DC component of the signal while coupling signals of 10 hertz (–3 dB point; 50 hertz for external signals) and higher to the Sweep Generator circuit.

Sweep Generator

The Sweep Generator circuit is a Tektronix integrated circuit, U30, and its associated discrete circuit components. The active circuits in this IC include the trigger generator, the sweep-gating circuit, and an operational amplifier to form the basis of a Miller Integrator. Power is applied to pins 7 and 12, and ground reference is applied to pin 15 to establish the operating levels within the device. An internal reference Zener provides 6.4 volts between pins 9 and 8 for operation of external controls; pin 8 provides a level two diode junctions above the negative level at pin 12.

Trigger Generator. Pins 10, 11, 13, and 14 are associated with the trigger generator portion of U30. The triggering signal is applied to an FET input at pin 13. The TRIGGERING LEVEL/SLOPE potentiometer R31 at pin 14 controls the internal comparators that determine the level and slope at which the internal Schmitt multivibrator switches states, initiating a sweep trigger. Differentiating capacitor C19 at pin 11 determines the trigger-pulse width.

For normal triggered operation, –5 volts is applied to pin 10 to hold the bright baseline auto circuit inactive. In this mode, when the triggering signal is lost, a sweep cannot be produced. When AUTO TRIG button S10A is pushed, the –5 volts is disconnected to permit a free-running sweep, or bright baseline, to be produced. Pin 10 moves positive as C18 charges, and this positive potential replaces the incoming triggering signal. A new sweep will be initiated immediately following the sweep holdoff time. However, in the Auto Trig mode, any incoming triggering signal will discharge C18; if the signal is occurring at a rate greater than about 20 hertz, C18 will be held below the auto-trigger level, permitting a triggered sweep.

Sweep Gate and Miller Integrator. Pins 1, 2, 3, 4, 5, 6, and 16 are associated with the sweep generator portion of U30. Upon receipt of a trigger from the trigger generator, the sweep gate turns on. While the gate is on, an internal constant-current source provides timing current from pin 2 to the external R_T components R71-R77. Pin 5 is the operational amplifier null point, thus the timing current is forced into the feedback timing capacitor C75-C78. As the timing capacitor charges, a linear, negative-going sawtooth voltage is produced at pin 4. When the sawtooth reaches a level determined by R33, Sweep Length (pin 6), the sweep terminates. At this point, the sweep gate turns off, removing the timing current and quickly discharging the timing capacitor. A short-duration trigger-lockout period to allow the sweep generator to reset and stabilize is provided by C22 at pin 3.

The timing RC components are selected by SEC/DIV OR VOLTS/DIV switch S70, permitting one of six nominal sweep rates in decade steps to be chosen. R35, X1 Sweep Cal (pin 1) provides an adjustment of the timing current to permit calibrating the X1 sweep to the CRT graticule. MULTIPLIER control R67A attenuates the timing voltage to the R_T component, providing a variable X10 multiplication of the sweep time (a slower rate). R61, X10 Sweep Cal, permits calibrating the X10 sweep to the CRT graticule.

Sweep Output

The sweep sawtooth produced at pin 4 of U30 is connected through S71 and made available to the negative output contacts A15, B7, and B13. R45, POSITION, provides an adjustable change in the DC level at the positive output contacts, A7 and A13, to alter the quiescent beam position.

Gate Output

The negative-going gate produced at pin 16 of U30 is applied to Q55, producing a positive-going gate at its collector. The positive-going gate is made available to contacts A10 and B15, and also applied to Q57. The negative-going gate produced at Q57 collector is made available to contacts A9 and B10, and is used primarily to unblank the CRT during the sweep.

External Signal Display

To allow externally applied signals to be displayed instead of a time-base sweep, the 50 mV EXT button of the SEC/DIV OR VOLTS/DIV switch is pushed, signals applied to the EXT INPUT connector J1 can be directly applied to the amplifier in the oscilloscope mainframe via the positive output contacts, A7 and A13. In this mode, the Sweep Generator is disabled. MULTIPLIER control R67B performs as a continuously variable 1X to ≈100X attenuator, providing a deflection factor from 50 millivolts/division to ≈5 volts/division. R45, POSITION, provides an adjustable change in the DC level at the negative output contacts, A15, B7, and B13, to alter the quiescent beam position.

SECTION 4
CALIBRATION

Introduction

This section of the manual contains a procedure to return the circuits of the 5B13N to within their designed operating capabilities. Calibration is generally required after a repair has been made, or after long time intervals in which normal aging of components may affect instrument accuracy. For initial inspection to verify instrument operation, the Basic Operation procedure in Section 2 should be used (the instrument is checked with its covers on, using a minimum of peripheral equipment).

Instrument Maintenance

Before complete calibration, thoroughly clean and inspect this instrument as outlined in the Maintenance section of the Oscilloscope System manual. Also, the system manual contains information for general maintenance of this instrument, including preventive maintenance, component identification and replacement, etc.

Services Available

Tektronix, Inc. provides complete instrument repair and calibration at local Field Service Centers and at the Factory Service Center. Contact your local Tektronix Field Office or representative for further information.

TEST EQUIPMENT REQUIRED

General

The following test equipment and accessories, or the equivalent, is required for complete calibration of the 5B13N. Specifications given for the test equipment are the minimum necessary for accurate calibration. Therefore, some of the specifications listed here may be less rigorous than the actual performance capabilities of the test equipment. All test equipment is assumed to be correctly calibrated and operating within the listed specifications.

Calibration Equipment Alternatives

If other test equipment is substituted, control settings or calibration setup may need altering to meet the requirements of the equipment used. Detailed operating instructions for the test equipment are not given in this procedure. Refer to the instruction manual for the test equipment if more information is needed.

Special Calibration Fixtures

Special Tektronix calibration fixtures are used in this procedure only where they facilitate instrument calibration. These special calibration fixtures are available from Tektronix, Inc. Order by part number through your local Tektronix Field Office or representative.

Test Instruments

1. 5100-series oscilloscope. For this procedure, a 5103N/D10 with a 5A15N amplifier is used.

2. Constant-amplitude sine-wave generator. Frequency, 2 hertz to 2 megahertz; output amplitude, from about 0.5 volt to greater than 20 volts peak to peak. For example, General Radio 1310-B Oscillator (use a GR Type 274 QBJ Adapter to provide BNC output).

3. Time-mark generator. Marker outputs, 1 microsecond to 0.1 second; marker accuracy, within 0.1%. Tektronix 2901 Time Mark Generator recommended.

Accessories

4. Coaxial cable. Impedance, 50 ohms; length, 42 inches; connectors, BNC. Tektronix Part No. 012-0057-01.

5. Dual-input cable. Provides matched signal paths to the vertical and time-base external inputs. Tektronix Calibration Fixture 067-0525-00 recommended.

6. In-line termination. Impedance, 50 ohms; accuracy, ±2%; connectors, BNC. Tektronix Part No. 011-0049-01.

SHORT-FORM PROCEDURE AND INDEX

5B13N Serial No. _____

Calibration Date _____

Calibrated By _____

1. Check Sweep Triggering

Triggering Sensitivity: Check that triggering circuit is sensitive to the signals given in Table 4-1, with the input conditions as listed.

Triggering Level Control Range: Range is at least 1.5 volts peak to peak for external signals, and 6 divisions peak to peak for internal signals.

Line Triggering Operation: Stable CRT display at line frequency.

2. Check/Adjust Sweep Generator

Sweep Length: At least 1 μs/div sweep rate, adjust R33 for a sweep length of 10 major divisions.

Sweep Timing: At 1 ms/div sweep rate and MULTIPLIER at X1, adjust R35 (X1 Sweep Cal) so second and tenth 1-ms time markers are exactly 8 divisions apart; with MULTIPLIER at X10, adjust R61 (X10 Sweep Cal) so second and tenth 10-ms markers are exactly 8 divisions apart.

Sweep Linearity: Displayed accuracy over any two-division interval within the center 8 divisions is within 8%.

Sec/Div Switch Accuracy: Timing accuracy for all switch positions is as listed in Table 4-2.

Position Range: Any portion of the sweep can be positioned on screen.

3. Check External-Signal Display

Deflection Factor Accuracy: Within 5% at 50 mV/div (X1)

Multiplier Control Ratio: At least 100:1.

Bandwidth: DC to at least 250 kilohertz.

CALIBRATION PROCEDURE

Preparation

NOTE

This instrument should be adjusted at an ambient temperature between +20°C and +30°C (between +68°F and +86°F) for best overall accuracy.

1. Remove the dust cover from the right side of the 5B13N and remove the cabinet panel from the 5100-series oscilloscope. Insert the 5B13N into the right plug-in compartment and insert a 5A-series amplifier unit into the left plug-in compartment. A plug-in extender (Part No. 067-0645-00) is available for use with this system, but is not mandatory for this procedure.

2. Connect the oscilloscope to the power source for which it is wired. Set the controls as given under Initial Control Settings.

Initial Control Settings

NOTE

Do not preset internal controls unless they are known to be significantly out of adjustment, or unless repairs have been made to the circuit. In these instances, the particular controls can be set to midrange.

5B13N

DISPLAY	Alt (button out)
POSITION	Midrange
MULTIPLIER	X1
SEC/DIV	1 ms
Triggering	
LEVEL/SLOPE	Midrange, +
SOURCE	LEFT
MODE	AUTO TRIG

Oscilloscope

Mainframe (5103N/D10)	
Intensity	Normal display brightness.
Focus	Adjust for best focus of trace.
Amplifier (5A15N)	
Display	On
Position	Midrange
Volts/Div	0.5 V
Variable Volts/Div	Calibrated (fully clockwise)
Input Coupling	DC

1. Check Sweep Triggering

TRIGGERING SENSITIVITY

a. Connect the sine-wave generator output to the amplifier input and the 5B13N EXT INPUT through a coaxial cable and a dual-input cable. Set the generator for a coaxial cable and a dual-input cable. Set the generator for a one-megahertz, one-division (500 millivolts) display. Position the display as desired.

b. CHECK—Using the conditions and control settings given in Table 4-1 as a guide, check that stable triggering can be obtained with the LEVEL/SLOPE control for both + and – slope.

TABLE 4-1

Sine-wave generator frequency	SEC/DIV	Triggering Source	Triggering signal display amplitude
1 MHz	1 μs	LEFT	1 division
10 Hz	10 ms		
100 kHz	10 μs	EXT	0.5 division (250 millivolts)
50 Hz	10 ms		

TRIGGERING LEVEL CONTROL RANGE

c. Set the Input Coupling of the amplifier unit to GND and the SEC/DIV switch to 1 ms. Adjust the free-running trace to the center graticule line, then set the Input Coupling to DC. Adjust the sine-wave generator frequency to one kilohertz and the amplitude to exactly two divisions (1 volt). Change the Volts/Div switch to .2 and adjust the Variable Volts/Div control for exactly 4 divisions of display, establishing a deflection factor of 0.25 volt/division. Then adjust the sine-wave generator amplitude for slightly greater than six divisions of display.

d. CHECK—Stable CRT display can be obtained with the LEVEL/SLOPE control, selecting any point on the triggering signal within the center 6 divisions to start the display. This indicates a level range of 1.5 volts peak to peak.

e. Set the TRIGGERING SOURCE switch to LEFT, and check that internal triggering can be obtained within the center 6 divisions, indicating a level range of 6 divisions peak to peak.

f. Disconnect the sine-wave generator.

LINE TRIGGERING OPERATION

g. Set the Sweep Mode switch to normal sweep (AUTO TRIG button out). Check that sweep disappears.

h. Set the TRIGGERING Source switch to LINE.

i. CHECK—Sweep appears, triggered by line frequency. Adjust the LEVEL/SLOPE control if necessary.

2. Check/Adjust Sweep Generator

a. Set the front-panel controls as listed under Initial Control Settings, except as follows:

SEC/DIV 1 μs

SWEEP LENGTH

b. Connect the time-mark generator marker output to the vertical input connector through a coaxial cable and a 50-ohm termination. Set the time-mark generator for 1-microsecond markers. If necessary, adjust the Volts/Div switch to provide about two divisions or more of marker amplitude. Position the first marker to the left edge of the graticule.

c. CHECK—About one 1-microsecond marker per major graticule division.

ADJUST—R33, Sweep Length, so the sweep is 10 divisions (one screen width) in length. This will provide a sweep length between 11 and 12 major divisions for the rest of the calibrated timing positions.

SWEEP TIMING

d. Set the SEC/DIV switch to 1 ms and the time-mark generator marker selector for 1-millisecond markers. Reposition the sweep start to the left edge of the graticule.

e. CHECK—With the MULTIPLIER control in the X1 position, about one marker per major graticule division should be observed. Check timing over middle eight divisions. The distance between the second and tenth markers must be 8 divisions, ±0.4 division (±5%).

ADJUST—R35, X1 Sweep Cal, so the second and tenth markers are exactly 8 divisions apart.

f. Rotate the MULTIPLIER control to X10 (fully counterclockwise) and set the time-mark generator for 10-millisecond markers.

g. ADJUST—R61, X10 Sweep Cal, so the second and tenth 10-millisecond markers are exactly 8 divisions apart.

INTERACTION—Repeat steps c through f to ensure correct timing.

SWEEP LINEARITY

h. Turn the MULTIPLIER control to X1 and set the time-mark generator for 1-millisecond markers.

i. CHECK—Displayed accuracy over any two-division interval within the center 8 divisions is within 8% (2 divisions ±0.16 division).

SEC/DIV SWITCH ACCURACY

j. Set the SEC/DIV switch and time-mark generator marker selector as per Table 4-2.

k. CHECK—Timing accuracy over middle 8 divisions is within 5%.

TABLE 4-2

SEC/DIV switch setting	Time marker selector	CRT display (markers/ division)	Accuracy (measured between first and ninth graticule lines)
1 μs	1 μs	1	±5% (±0.4 division)
10 μs	10 μs		
100 μs	.1 ms		
1 ms	1 ms		
10 ms	10 ms		
100 ms	.1 s		

POSITION RANGE

l. Rotate the POSITION control from one extreme to the other.

m. CHECK—Any portion of the sweep can be positioned on screen.

n. Reposition the sweep start to the left edge of the graticule and disconnect the time-mark generator.

3. Check External-Signal Display

DEFLECTION FACTOR ACCURACY

a. Set the front-panel controls as listed under Initial Control Settings, except as follows:

Volts/Div (amplifier unit) 50 ms

b. Connect the sine-wave generator output to the amplifier input and the 5B13N EXT INPUT through a coaxial cable and a dual-input cable. Set the generator for a one-kilohertz, six-division display.

c. Set the TRIGGERING Source to EXT and the SEC/DIV OR VOLTS/DIV switch to 50 mV EXT. The X-Y display should be a diagonal line or loop.

d. CHECK—Overall horizontal width of the display is 6 divisions, ±0.3 division (within 5%).

MULTIPLIER CONTROL RATIO

e. Set the amplifier unit Volts/Div switch to 5 V and the SEC/DIV OR VOLTS/DIV switch to 1 ms. Adjust the sine-wave generator amplitude for a six-division vertical display.

f. Set the SEC/DIV OR VOLTS/DIV switch to 50 mV EXT and rotate the MULTIPLIER control fully counterclockwise.

g. CHECK—Overall horizontal width of display is 6 divisions or less. This indicates an attenuator ratio of at least 100:1.

BANDWIDTH

h. Set the amplifier unit Input Coupling to GND and the MULTIPLIER control to X1. Adjust the constant-amplitude sine-wave generator for a horizontal line 8 divisions in length. Change the frequency from 1 kilohertz to 250 kilohertz.

i. CHECK—The horizontal line is at least 5.66 divisions in length (.707 times 8 divisions at −3 dB).

This completes the calibration procedure for the 5B13N.

DIAGRAMS AND CIRCUIT BOARD ILLUSTRATIONS

Symbols and Reference Designators

Electrical components shown on the diagrams are in the following units unless noted otherwise:

Capacitors = Values one or greater are in picofarads (pF).
Values less than one are in microfarads (μF).

Resistors = Ohms (Ω).

Graphic symbols and class designation letters are based on ANSI Standard Y32.2-1975.

Logic symbology is based on ANSI Y32.14-1973 in terms of positive logic. Logic symbols depict the logic function performed and may differ from the manufacturer's data.

The overline on a signal name indicates that the signal performs its intended function when it goes to the low state.

Abbreviations are based on ANSI Y1.1-1972.

Other ANSI standards that are used in the preparation of diagrams by Tektronix, Inc. are:

Y14.15, 1966	Drafting Practices.
Y14.2, 1973	Line Conventions and Lettering.
Y10.5, 1968	Letter Symbols for Quantities Used in Electrical Science and Electrical Engineering.

The following prefix letters are used as reference designators to identify components or assemblies on the diagrams.

A	Assembly, separable or repairable (circuit board, etc)
AT	Attenuator, fixed or variable
B	Motor
BT	Battery
C	Capacitor, fixed or variable
CB	Circuit breaker
CR	Diode, signal or rectifier
DL	Delay line
DS	Indicating device (lamp)
E	Spark Gap, Ferrite bead
F	Fuse
FL	Filter
H	Heat dissipating device (heat sink, heat radiator, etc)
HR	Heater
HY	Hybrid circuit
J	Connector, stationary portion
K	Relay
L	Inductor, fixed or variable
M	Meter
P	Connector, movable portion
Q	Transistor or silicon-controlled rectifier
R	Resistor, fixed or variable
RT	Thermistor
S	Switch or contactor
T	Transformer
TC	Thermocouple
TP	Test point
U	Assembly, inseparable or non-repairable (integrated circuit, etc.)
V	Electron tube
VR	Voltage regulator (zener diode, etc.)
W	Wirestrap or cable
Y	Crystal
Z	Phase shifter

The following special symbols may appear on the diagrams:

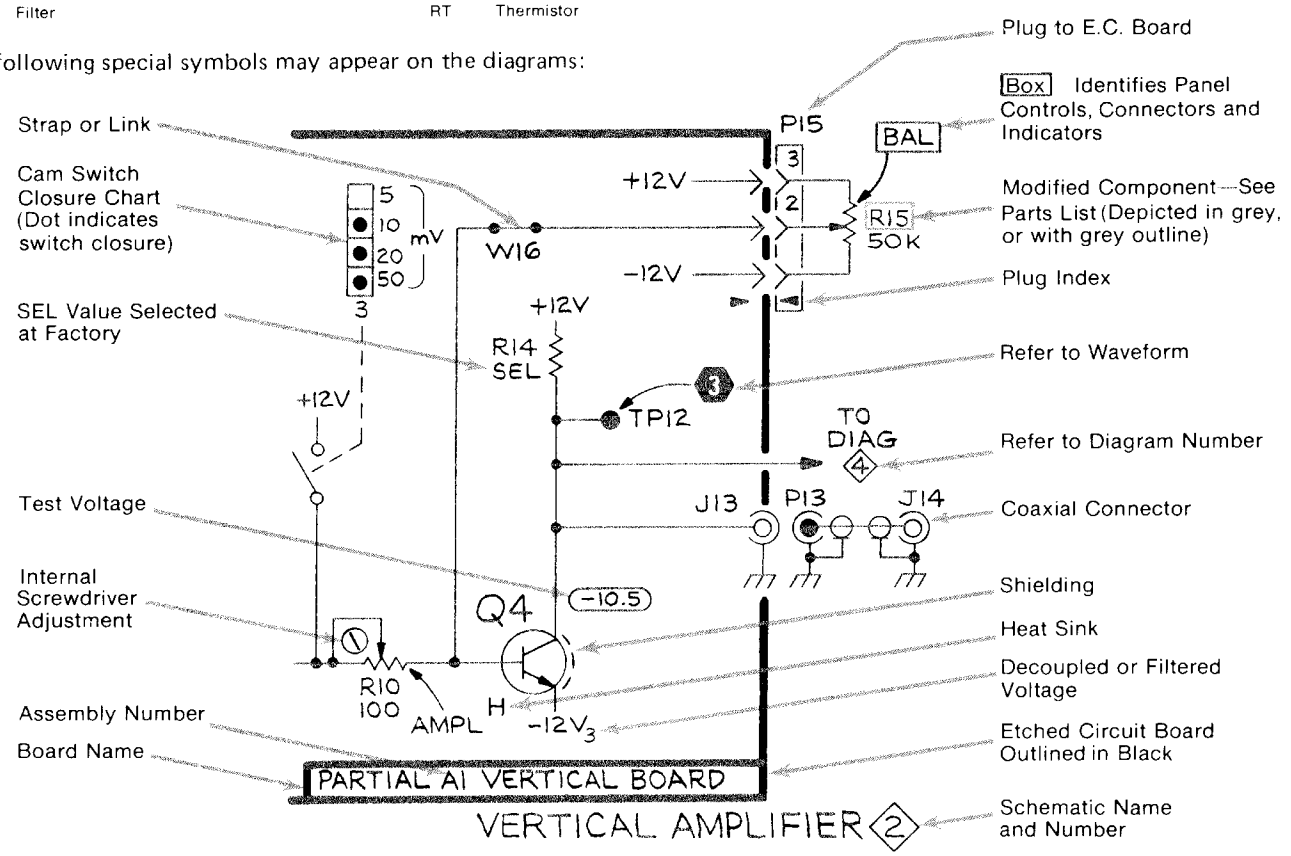

5B13N

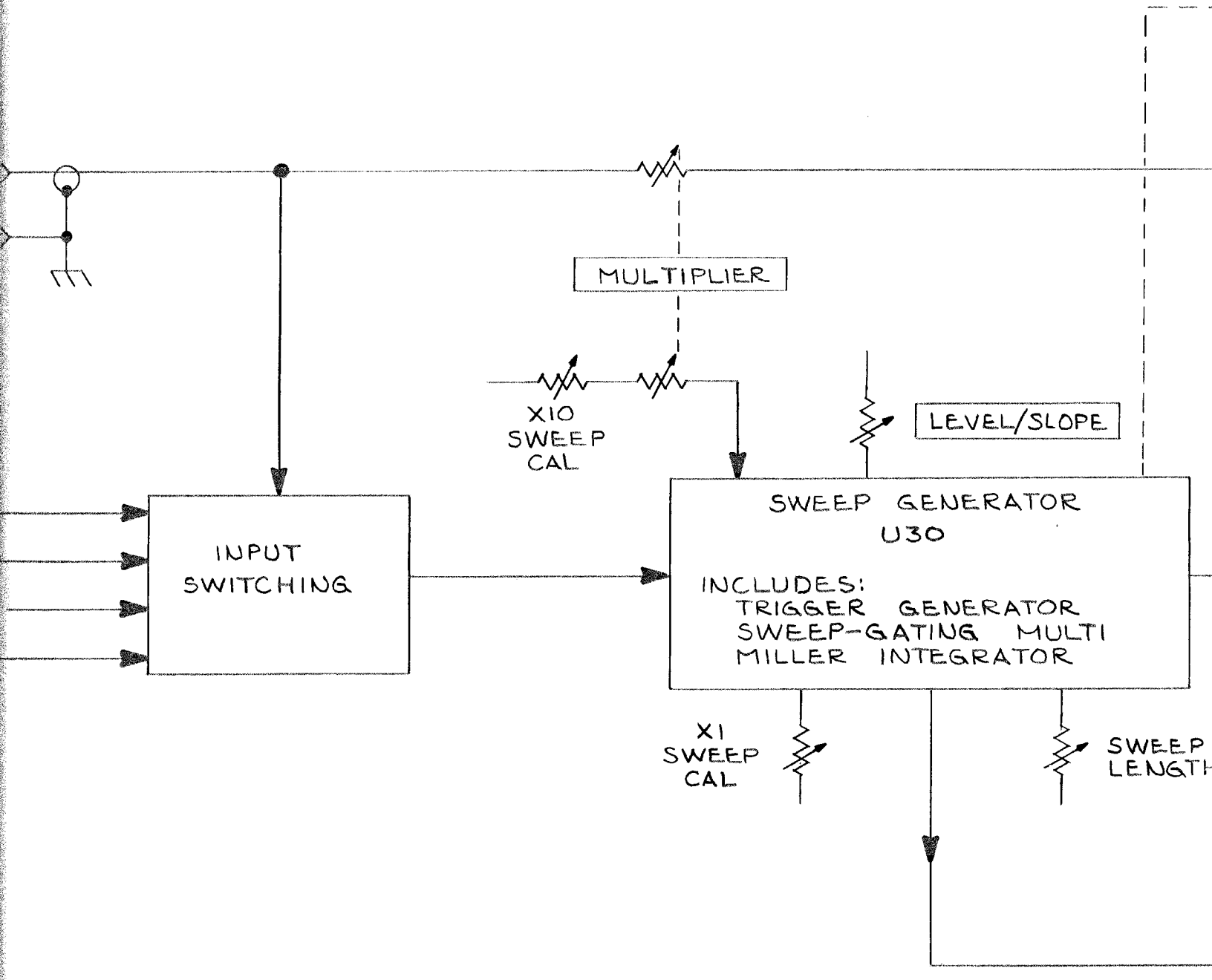
MULTIPLIER
X10
SWEEP
CAL
LEVEL/SLOPE
INPUT
SWITCHING
SWEEP GENERATOR
U30
INCLUDES:
TRIGGER GENERATOR
SWEEP-GATING MULTI
MILLER INTEGRATOR
X1
SWEEP
CAL
SWEEP
LENGTH

Ⓐ

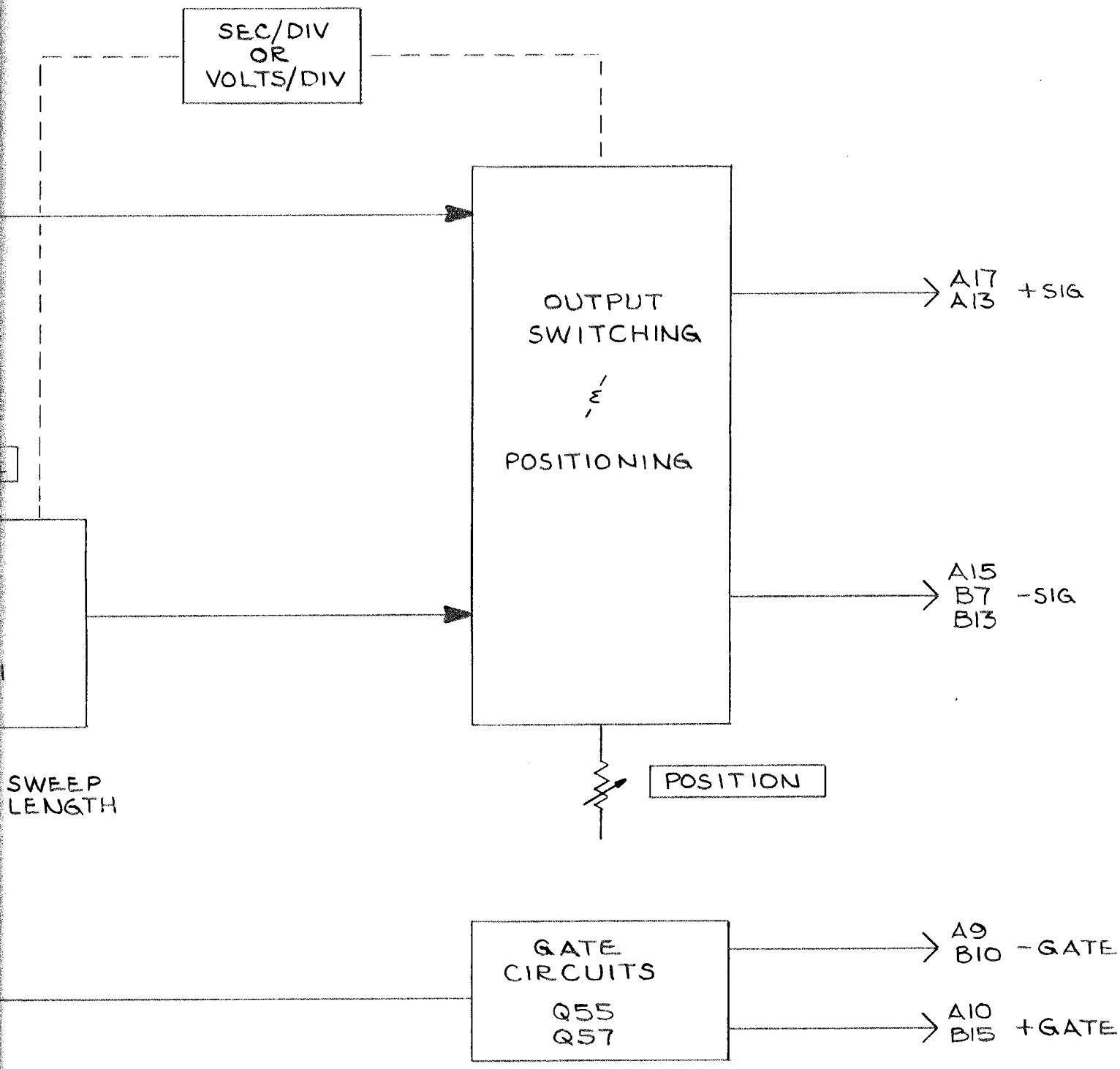

BLOCK DIAGRAM 871 RHL

BLOCK DIAGRAM

5B13N PARTS LOCATION GRID

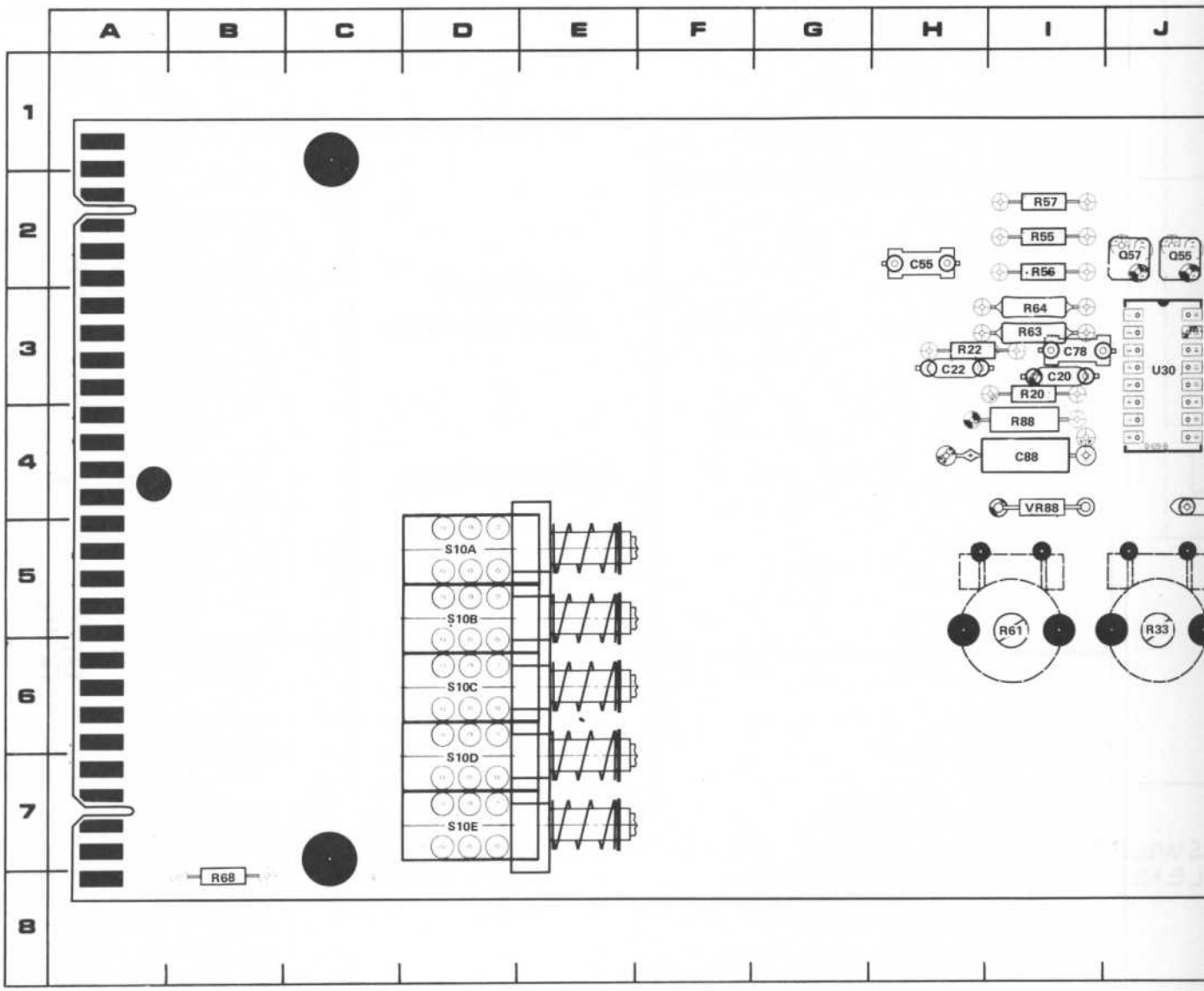

*See Parts List for serial number ranges.

CKT NO	GRID LOC	CKT NO	GRID LOC	CKT NO	GRID LOC	CKT NO	GRID LOC	CKT NO	GR LO
C1	N-7	C77	M-3	R20	I-3	R55	I-2	R77	N-5
C10	L-6	C78	I-3	R22	H-3	R56	I-2	R88	I-4
C18	K-4	C88	I-4	R23	L-2	R57	I-2		
C19	K-3			R33	J-5	R61	I-5	S10A	D-5
C20	I-3	CR14	K-4	R35	K-5	R63	I-3	S10B	D-5
C22	H-3	CR15	K-4	R41	L-5	R64	I-3	S10C	D-6
C33	K-5	CR69	N-3	R42	M-5	R68	B-8	S10D	D-7
C42	M-5			R46 *	O-3	R69	N-3	S10E	D-7
C48	O-3	Q55	J-2	R47	O-8	R71	M-6	S70A	O-4
C55	H-3	Q57	J-2	R48	O-3	R72	M-7	S70B	O-4
C75	I-5			R51	K-3	R73	N-6	S70C	O-5
C76	M-4	R14	L-4	R53	K-2	R75	N-5	S70D	O-5
		R15	K-3					S70E	O-6

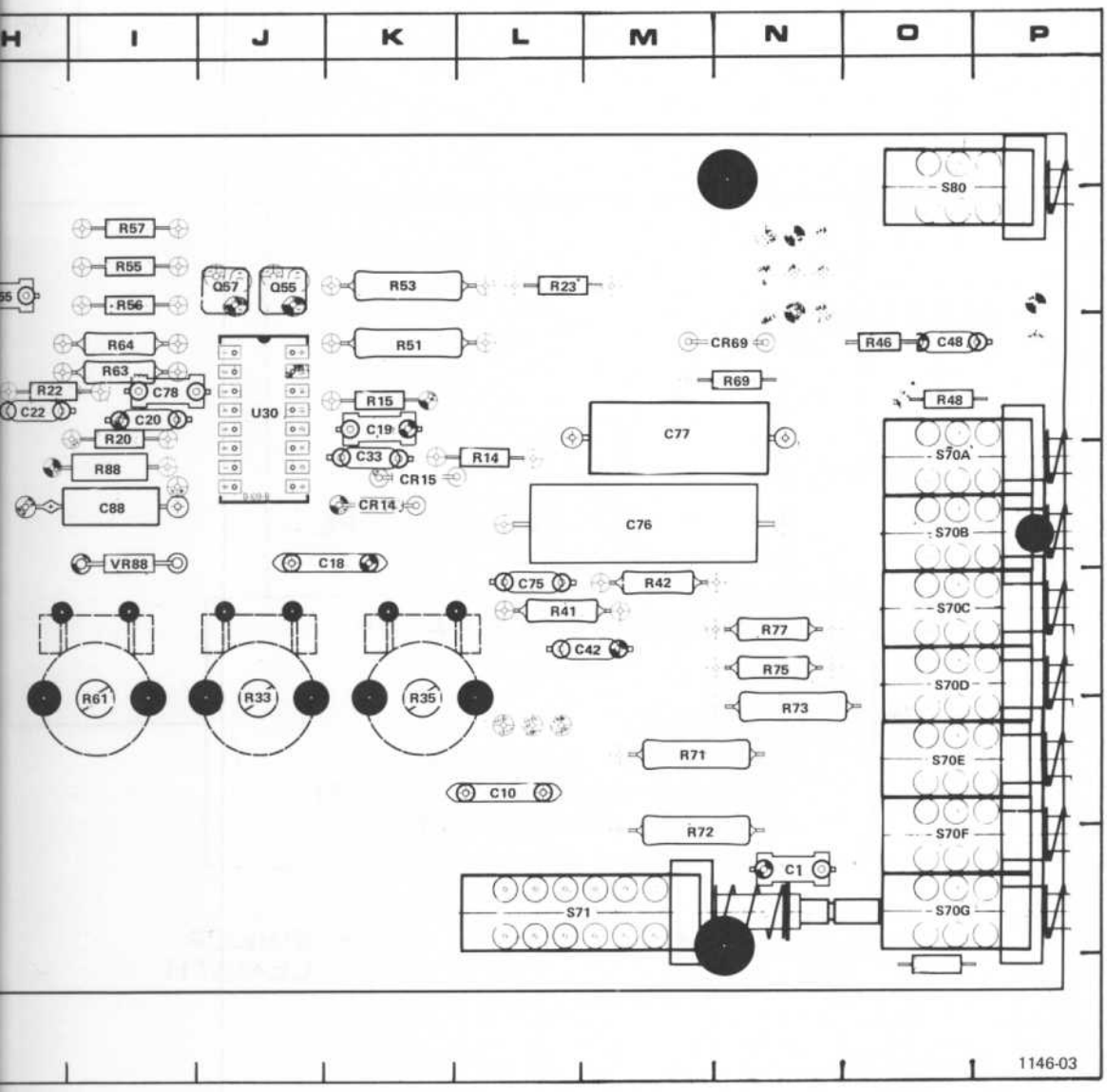

GRID LOC	CKT NO	GRID LOC	CKT NO	GRID LOC	CKT NO	GRID LOC
I-3	R55	I-2	R77	N-5	S70F	O-7
H-3	R56	I-2	R88	I-4	S70G	O-7
L-2	R57	I-2			S71	L-7
J-5	R61	I-5	S10A	D-5	S80	O-2
K-5	R63	I-3	S10B	D-5		
L-5	R64	I-3	S10C	D-6	U30	J-3
M-5	R68	B-8	S10D	D-7		
O-3	R69	N-3	S10E	D-7	VR88	I-4
O-8	R71	M-6	S70A	O-4		
O-3	R72	M-7	S70B	O-4		
K-3	R73	N-6	S70C	O-5		
K-2	R75	N-5	S70D	O-5		
			S70E	O-6		

REPLACEABLE ELECTRICAL PARTS

PARTS ORDERING INFORMATION

Replacement parts are available from or through your local Tektronix, Inc. Field Office or representative.

Changes to Tektronix instruments are sometimes made to accommodate improved components as they become available, and to give you the benefit of the latest circuit improvements developed in our engineering department. It is therefore important, when ordering parts, to include the following information in your order: Part number, instrument type or number, serial number, and modification number if applicable.

If a part you have ordered has been replaced with a new or improved part, your local Tektronix, Inc. Field Office or representative will contact you concerning any change in part number.

Change information, if any, is located at the rear of this manual.

SPECIAL NOTES AND SYMBOLS

X000	Part first added at this serial number
00X	Part removed after this serial number

ITEM NAME

In the Parts List, an Item Name is separated from the description by a colon (:). Because of space limitations, an Item Name may sometimes appear as incomplete. For further Item Name identification, the U.S. Federal Cataloging Handbook H6-1 can be utilized where possible.

ABBREVIATIONS

ACTR	ACTUATOR	PLSTC	PLASTIC
ASSY	ASSEMBLY	QTZ	QUARTZ
CAP	CAPACITOR	RECP	RECEPTACLE
CER	CERAMIC	RES	RESISTOR
CKT	CIRCUIT	RF	RADIO FREQUENCY
COMP	COMPOSITION	SEL	SELECTED
CONN	CONNECTOR	SEMICOND	SEMICONDUCTOR
ELCTLT	ELECTROLYTIC	SENS	SENSITIVE
ELEC	ELECTRICAL	VAR	VARIABLE
INCAND	INCANDESCENT	WW	WIREWOUND
LED	LIGHT EMITTING DIODE	XFMR	TRANSFORMER
NONWIR	NON WIREWOUND	XTAL	CRYSTAL

CROSS INDEX—MFR. CODE NUMBER TO MANUFACTURER

Mfr. Code	Manufacturer	Address	City, State, Zip
01121	ALLEN-BRADLEY COMPANY	1201 2ND STREET SOUTH	MILWAUKEE, WI 53204
03888	KDI PYROFILM CORPORATION	60 S JEFFERSON ROAD	WHIPPANY, NJ 07981
04222	AVX CERAMICS, DIVISION OF AVX CORP.	P O BOX 867, 19TH AVE. SOUTH	MYRTLE BEACH, SC 29577
05091	TRI-ORDINATE CORPORATION	343 SNYDER AVENUE	BERKELEY HEIGHTS, NJ 07922
07910	TELEDYNE SEMICONDUCTOR	12515 CHADRON AVE.	HAWTHORNE, CA 90250
08806	GENERAL ELECTRIC CO., MINIATURE LAMP PRODUCTS DEPARTMENT	NELA PARK	CLEVELAND, OH 44112
53944	ELT INC., GLOW LITE DIVISION	BOX 698	PAULS VALLEY, OK 73075
56289	SPRAGUE ELECTRIC CO.		NORTH ADAMS, MA 01247
71450	CTS CORP.	1142 W. BEARDSLEY AVE.	ELKHART, IN 46514
72982	ERIE TECHNOLOGICAL PRODUCTS, INC.	644 W. 12TH ST.	ERIE, PA 16512
75042	TRW ELECTRONIC COMPONENTS, IRC FIXED RESISTORS, PHILADELPHIA DIVISION	401 N. BROAD ST.	PHILADELPHIA, PA 19108
80009	TEKTRONIX, INC.	P O BOX 500	BEAVERTON, OR 97077
91637	DALE ELECTRONICS, INC.	P. O. BOX 609	COLUMBUS, NE 68601

Ckt No.	Tektronix Part No.	Serial/Model No. Eff	Dscont	Name & Description	Mfr Code	Mfr Part Number
A1	670-1628-00	B010100	B079999	CKT BOARD ASSY:MAIN	80009	670-1628-00
A1	670-1628-01	B080000	B089999	CKT BOARD ASSY:MAIN	80009	670-1628-01
A1	670-1628-02	B090000		CKT BOARD ASSY:MAIN	80009	670-1628-02
C1	283-0067-00			CAP.,FXD,CER DI:0.001UF,10%,200V	72982	835-515B102K
C10	283-0057-00			CAP.,FXD,CER DI:0.1UF,+80-20%,200V	56289	274C10
C15	281-0524-00	XB050000		CAP.,FXD,CER DI:150PF,+/-30PF,500V	04222	7001-1381
C18	283-0059-00			CAP.,FXD,CER DI:1UF,+80-20%,25V	72982	8141N037Z5U0105Z
C19	281-0629-00			CAP.,FXD,CER DI:33PF,5%,600V	72982	308-000C0G0330J
C20	283-0177-00			CAP.,FXD,CER DI:1UF,+80-20%,25V	72982	8131N039 E 105Z
C22	283-0000-00			CAP.,FXD,CER DI:0.001UF,+100-0%,500V	72982	831-516E102P
C33	283-0080-00			CAP.,FXD,CER DI:0.022UF,+80-20%,25V	56289	19C611
C42	283-0116-00			CAP.,FXD,CER DI:820PF,5%,500V	72982	801-547B821J
C48	283-0178-00			CAP.,FXD,CER DI:0.1UF,+80-20%,100V	72982	8131N145 E 104Z
C55	281-0546-00	B010100	B039999	CAP.,FXD,CER DI:330PF,10%,500V	04222	7001-1380
C55	281-0525-00	B040000		CAP.,FXD,CER DI:470PF,+/-94PF,500V	04222	7001-1364
C75	283-0028-00			CAP.,FXD,CER DI:0.0022UF,20%,50V	56289	19C606
C76 C77	295-0153-00			CAP SET,MATCHED:0.1UF,0.001UF,MATCHED 1%	80009	295-0153-00
C78	281-0510-00			CAP.,FXD,CER DI:22PF,+/-4.4PF,500V	72982	301-000C0G0220M
C88	290-0297-00			CAP.,FXD,ELCTLT:39UF,10%,10V	56289	150D396X9010B2
CR14	152-0185-00			SEMICOND DEVICE:SILICON,40PIV,150MA	07910	1N4152
CR15	152-0185-00			SEMICOND DEVICE:SILICON,40PIV,150MA	07910	1N4152
CR69	152-0185-00			SEMICOND DEVICE:SILICON,40PIV,150MA	07910	1N4152
DS67	150-0111-00	B010100	B079999	LAMP,GLOW:NEON,1.2MA	53944	A1B-3
DS67	150-0130-00	B080000		LAMP,INCAND:5V,60MA	08806	2200DX
J1	131-0955-00			CONNECTOR,RCPT,:BNC,FEMALE,W/HARDWARE	05091	31-279
Q55	151-0341-00			TRANSISTOR:SILICON,NPN	80009	151-0341-00
Q57	151-0190-00			TRANSISTOR:SILICON,NPN	80009	151-0190-00
R1	316-0102-00			RES.,FXD,CMPSN:1K OHM,10%,0.25W	01121	CB1021
R9	316-0475-00	XB030000		RES.,FXD,CMPSN:4.7M OHM,10%,0.25W	01121	CB4751
R14	316-0103-00			RES.,FXD,CMPSN:10K OHM,10%,0.25W	01121	CB1031
R15	316-0105-00			RES.,FXD,CMPSN:1M OHM,10%,0.25W	01121	CB1051
R20	316-0100-00			RES.,FXD,CMPSN:10 OHM,10%,0.25W	01121	CB1001
R22	316-0473-00			RES.,FXD,CMPSN:47K OHM,10%,0.25W	01121	CB4731
R23	316-0104-00			RES.,FXD,CMPSN:100K OHM,10%,0.25W	01121	CB1041
R31	311-1220-00			RES.,VAR,NONWIR:20K OHM,30%,0.25W	71450	200-YA5547
R33	311-1199-00			RES.,VAR,NONWIR:10K OHM,30%,0.25W	71450	201-YA5543
R35	311-1199-00			RES.,VAR,NONWIR:10K OHM,30%,0.25W	71450	201-YA5543
R41	321-0273-00			RES.,FXD,FILM:6.81K OHM,1%,0.125W	91637	MFF1816G68100F
R42	321-0222-00			RES.,FXD,FILM:2K OHM,1%,0.125W	91637	MFF1816G20000F
R45	311-1220-00			RES.,VAR,NONWIR:20K OHM,30%,0.25W	71450	200-YA5547
R46	315-0470-00	XB070000		RES.,FXD,CMPSN:47 OHM,5%,0.25W	01121	CB4705
R47	316-0563-00			RES.,FXD,CMPSN:56K OHM,10%,0.25W	01121	CB5631
R48	316-0102-00			RES.,FXD,CMPSN:1K OHM,10%,0.25W	01121	CB1021
R51	322-0385-00			RES.,FXD,FILM:100K OHM,1%,0.25W	75042	CEBT0-1003F
R53	322-0385-00			RES.,FXD,FILM:100K OHM,1%,0.25W	75042	CEBT0-1003F
R55	316-0222-00			RES.,FXD,CMPSN:2.2K OHM,10%,0.25W	01121	CB2221
R56	315-0513-00			RES.,FXD,CMPSN:51K OHM,5%,0.25W	01121	CB5135
R57	316-0102-00			RES.,FXD,CMPSN:1K OHM,10%,0.25W	01121	CB1021
R61	311-1199-00			RES.,VAR,NONWIR:10K OHM,30%,0.25W	71450	201-YA5543

Ckt No.	Tektronix Part No.	Serial/Model No. Eff	Dscont	Name & Description	Mfr Code	Mfr Part Number
R63	321-0335-00			RES.,FXD,FILM:30.1K OHM,1%,0.125W	91637	MFF1816G30101F
R64	321-0130-00			RES.,FXD,FILM:221 OHM,1%,0.125W	91637	MFF1816G221R0F
R67A,B	311-1292-00			RES.,VAR,NONWIR:2K OHM X 100K OHM,20%	80009	311-1292-00
R68	316-0184-00	B010100	B079999	RES.,FXD,CMPSN:180K OHM,10%,0.25W	01121	CB1841
R68	315-0270-00	B080000		RES.,FXD,CMPSN:27 OHM,5%,0.25W	01121	CB2705
R69	316-0103-00			RES.,FXD,CMPSN:10K OHM,10%,0.25W	01121	CB1031
R71	309-0087-00	B010100	B061464	RES.,FXD,FILM:5M OHM,1%,0.50W	91637	DC1-25004F
R71	325-0056-00	B061465		RES.,FXD,FILM:5M OHM,1%,0.5W	03888	PME70-G50003F
R72	316-0473-00			RES.,FXD,CMPSN:47K OHM,10%,0.25W	01121	CB4731
R73	323-0498-00			RES.,FXD,FILM:1.5M OHM,1%,0.50W	75042	CECTO-1504F
R75	321-0402-00			RES.,FXD,FILM:150K OHM,1%,0.125W	91637	MFF1816G15002F
R77	321-0306-00			RES.,FXD,FILM:15K OHM,1%,0.125W	91637	MFF1816G15001F
R88	302-0102-00	B010100	B059999	RES.,FXD,CMPSN:1K OHM,10%,0.50W	01121	EB1021
R88	304-0102-00	B060000		RES.,FXD,CMPSN:1K OHM,10%,1W	01121	GB1021
S10A-E	260-1288-00			SWITCH,PUSH:	80009	260-1288-00
S70A-G	260-1287-00			SWITCH,PUSH:	80009	260-1287-00
S71	260-1310-00			SWITCH,PUSH:	80009	260-1310-00
S80	260-1211-00			SWITCH,PUSH:DPDT,PUSH-PUSH	80009	260-1211-00
U30	155-0055-00			MICROCIRCUIT,LI:MONOLITHIC,TRIG AND SWEEP	80009	155-0055-00
VR88	152-0279-00			SEMICOND DEVICE:ZENER,0.4W,5.1V,5%	80009	152-0279-00

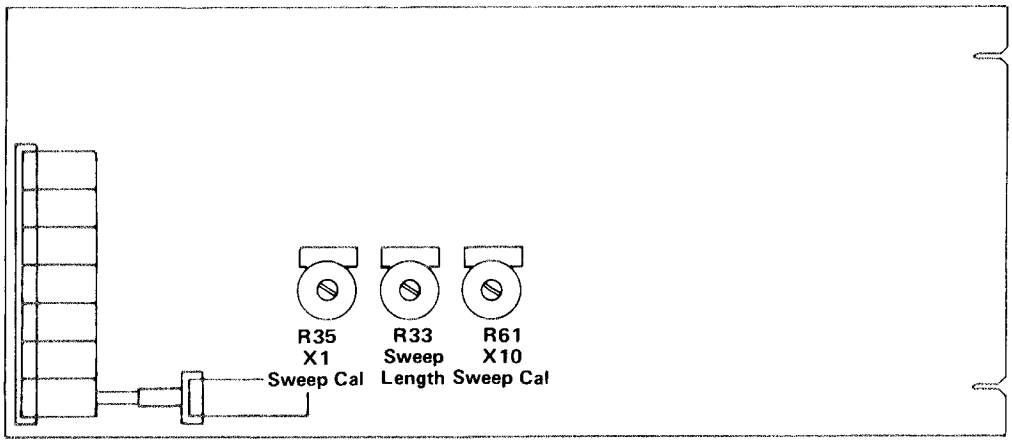

Calibration control locations.

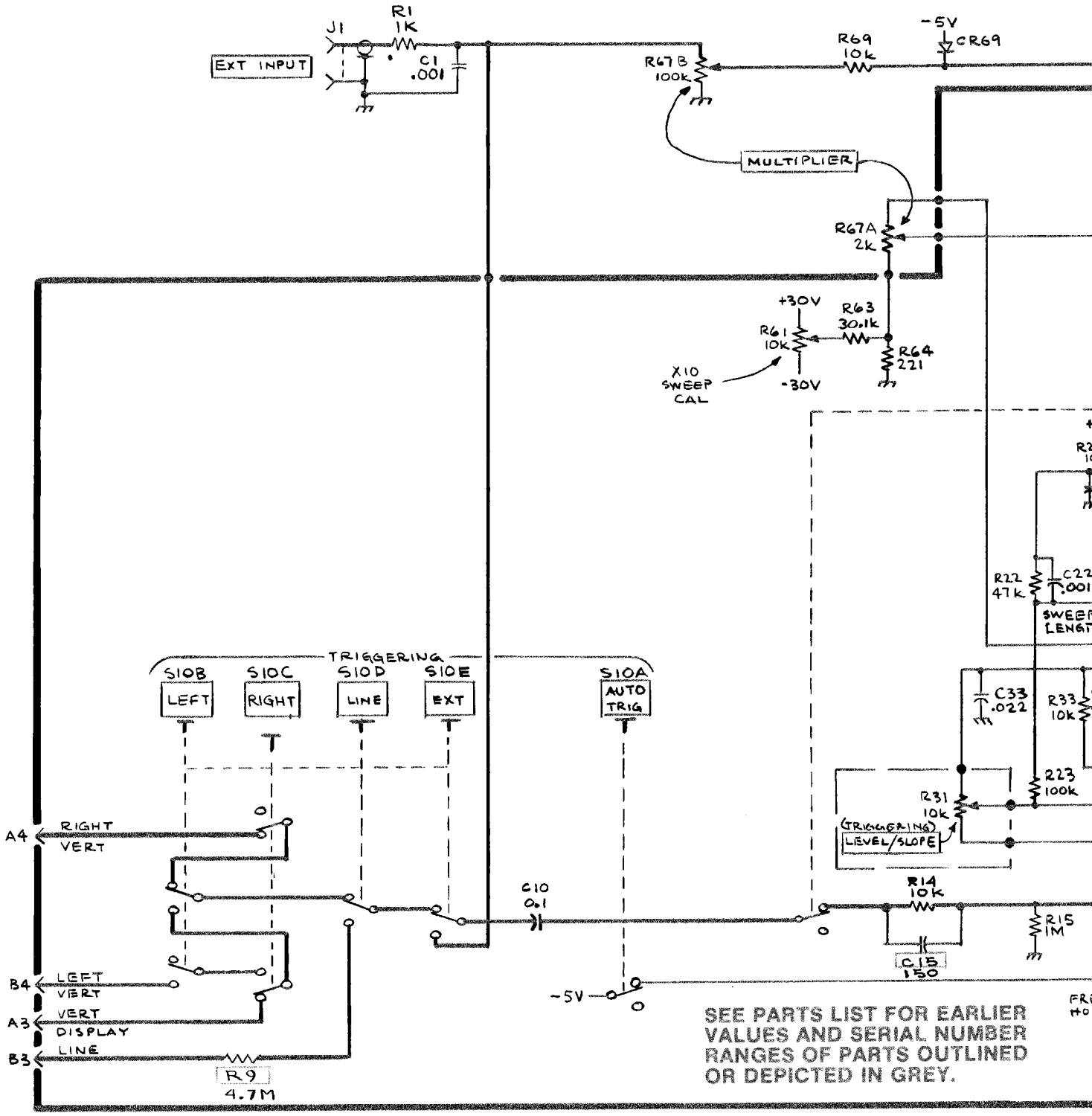

5B13N

1146-04
REV. D, APR

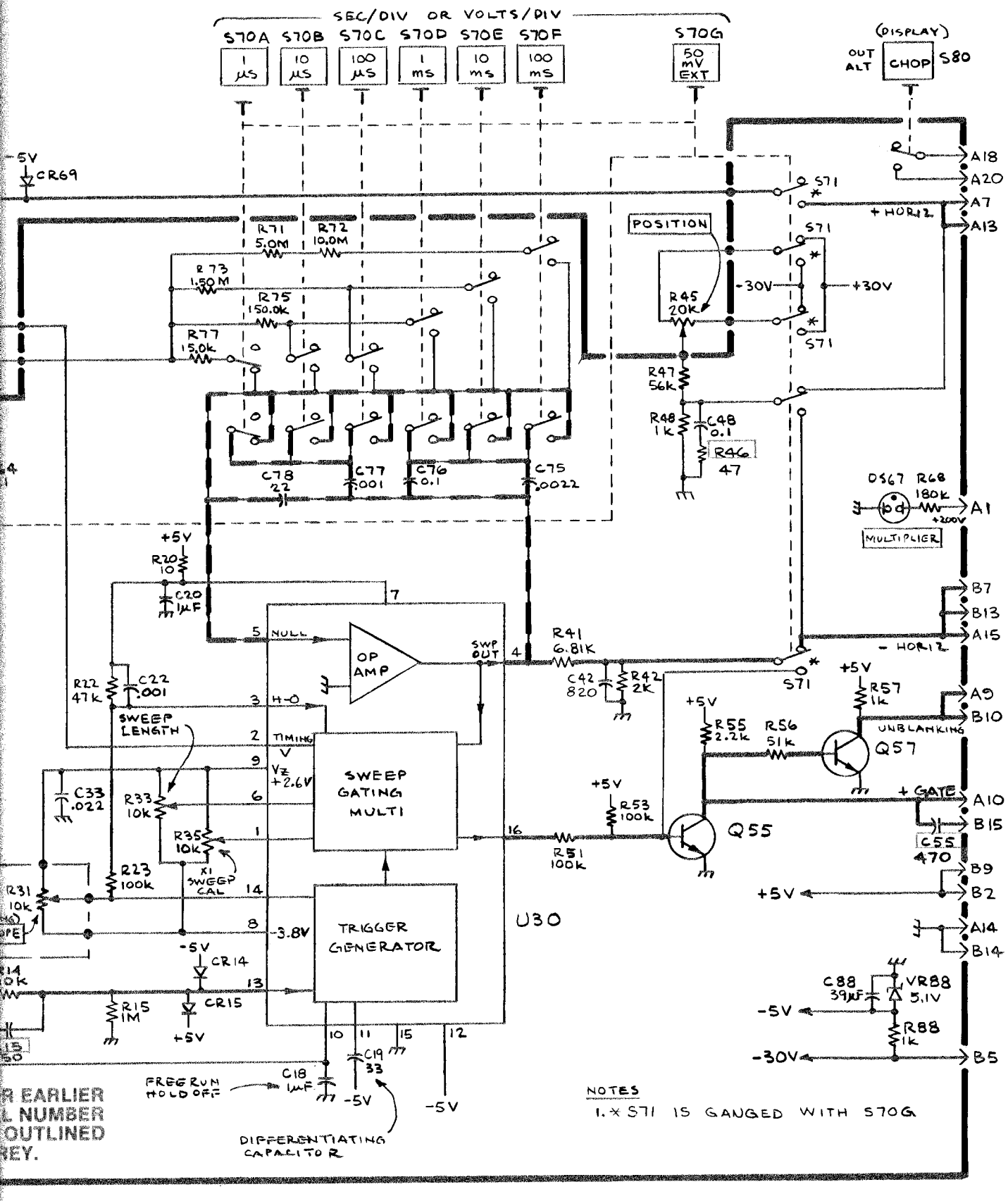

NOTES

1. * S71 IS GANGED WITH S70G

1146-04
REV. D, APRIL 1977

TIME BASE

772

TIME BASE

REPLACEABLE MECHANICAL PARTS

PARTS ORDERING INFORMATION

Replacement parts are available from or through your local Tektronix, Inc. Field Office or representative.

Changes to Tektronix instruments are sometimes made to accommodate improved components as they become available, and to give you the benefit of the latest circuit improvements developed in our engineering department. It is therefore important, when ordering parts, to include the following information in your order: Part number, instrument type or number, serial number, and modification number if applicable.

If a part you have ordered has been replaced with a new or improved part, your local Tektronix, Inc. Field Office or representative will contact you concerning any change in part number.

Change information, if any, is located at the rear of this manual.

SPECIAL NOTES AND SYMBOLS

X000	Part first added at this serial number
00X	Part removed after this serial number

FIGURE AND INDEX NUMBERS

Items in this section are referenced by figure and index numbers to the illustrations.

INDENTATION SYSTEM

This mechanical parts list is indented to indicate item relationships. Following is an example of the indentation system used in the description column.

1 2 3 4 5 Name & Description

Assembly and/or Component
Attaching parts for Assembly and/or Component
- - - * - - -
Detail Part of Assembly and/or Component
Attaching parts for Detail Part
- - - * - - -
Parts of Detail Part
Attaching parts for Parts of Detail Part
- - - * - - -

Attaching Parts always appear in the same indentation as the item it mounts, while the detail parts are indented to the right. Indented items are part of, and included with, the next higher indentation. The separation symbol - - - * - - - indicates the end of attaching parts.

Attaching parts must be purchased separately, unless otherwise specified.

ITEM NAME

In the Parts List, an Item Name is separated from the description by a colon (:). Because of space limitations, an Item Name may sometimes appear as incomplete. For further Item Name identification, the U.S. Federal Cataloging Handbook H6-1 can be utilized where possible.

ABBREVIATIONS

"	INCH
#	NUMBER SIZE
ACTR	ACTUATOR
ADPTR	ADAPTER
ALIGN	ALIGNMENT
AL	ALUMINUM
ASSEM	ASSEMBLED
ASSY	ASSEMBLY
ATTEN	ATTENUATOR
AWG	AMERICAN WIRE GAGE
BD	BOARD
BRKT	BRACKET
BRS	BRASS
BRZ	BRONZE
BSHG	BUSHING
CAB	CABINET
CAP	CAPACITOR
CER	CERAMIC
CHAS	CHASSIS
CKT	CIRCUIT
COMP	COMPOSITION
CONN	CONNECTOR
COV	COVER
CPLG	COUPLING
CRT	CATHODE RAY TUBE
DEG	DEGREE
DWR	DRAWER
ELCTRN	ELECTRON
ELEC	ELECTRICAL
ELCTLT	ELECTROLYTIC
ELEM	ELEMENT
EPL	ELECTRICAL PARTS LIST
EQPT	EQUIPMENT
EXT	EXTERNAL
FIL	FILLISTER HEAD
FLEX	FLEXIBLE
FLH	FLAT HEAD
FLTR	FILTER
FR	FRAME or FRONT
FSTNR	FASTENER
FT	FOOT
FXD	FIXED
GSKT	GASKET
HDL	HANDLE
HEX	HEXAGON
HEX HD	HEXAGONAL HEAD
HEX SOC	HEXAGONAL SOCKET
HLCPS	HELICAL COMPRESSION
HLEXT	HELICAL EXTENSION
HV	HIGH VOLTAGE
IC	INTEGRATED CIRCUIT
ID	INSIDE DIAMETER
IDENT	IDENTIFICATION
IMPLR	IMPELLER
IN	INCH
INCAND	INCANDESCENT
INSUL	INSULATOR
INTL	INTERNAL
LPHLDR	LAMPHOLDER
MACH	MACHINE
MECH	MECHANICAL
MTG	MOUNTING
NIP	NIPPLE
NON WIRE	NOT WIRE WOUND
OBD	ORDER BY DESCRIPTION
OD	OUTSIDE DIAMETER
OVH	OVAL HEAD
PH BRZ	PHOSPHOR BRONZE
PL	PLAIN or PLATE
PLSTC	PLASTIC
PN	PART NUMBER
PNH	PAN HEAD
PWR	POWER
RCPT	RECEPTACLE
RES	RESISTOR
RGD	RIGID
RLF	RELIEF
RTNR	RETAINER
SCH	SOCKET HEAD
SCOPE	OSCILLOSCOPE
SCR	SCREW
SE	SINGLE END
SECT	SECTION
SEMICOND	SEMICONDUCTOR
SHLD	SHIELD
SHLDR	SHOULDERED
SKT	SOCKET
SL	SLIDE
SLFLKG	SELF-LOCKING
SLVG	SLEEVING
SPR	SPRING
SQ	SQUARE
SST	STAINLESS STEEL
STL	STEEL
SW	SWITCH
T	TUBE
TERM	TERMINAL
THD	THREAD
THK	THICK
TNSN	TENSION
TPG	TAPPING
TRH	TRUSS HEAD
V	VOLTAGE
VAR	VARIABLE
W/	WITH
WSHR	WASHER
XFMR	TRANSFORMER
XSTR	TRANSISTOR

CROSS INDEX—MFR. CODE NUMBER TO MANUFACTURER

Mfr. Code	Manufacturer	Address	City, State, Zip
000CY	NORTHWEST FASTENER SALES, INC.	7923 SW CIRRUS DRIVE	BEAVERTON, OREGON 97005
05091	TRI-ORDINATE CORPORATION	343 SNYDER AVENUE	BERKELEY HEIGHTS, NJ 07922
45722	USM CORP., PARKER-KALON FASTENER DIV.		CAMPBELLSVILLE, KY 42718
71785	TRW, CINCH CONNECTORS	1501 MORSE AVENUE	ELK GROVE VILLAGE, IL 60007
73743	FISCHER SPECIAL MFG. CO.	446 MORGAN ST.	CINCINNATI, OH 45206
78189	ILLINOIS TOOL WORKS, INC. SHAKEPROOF DIVISION	ST. CHARLES ROAD	ELGIN, IL 60120
79807	WROUGHT WASHER MFG. CO.	2100 S. O BAY ST.	MILWAUKEE, WI 53207
80009	TEKTRONIX, INC.	P O BOX 500	BEAVERTON, OR 97077
83385	CENTRAL SCREW CO.	2530 CRESCENT DR.	BROADVIEW, IL 60153
93907	CAMCAR SCREW AND MFG. CO.	600 18TH AVE.	ROCKFORD, IL 61101

Fig. & Index No.	Tektronix Part No.	Serial/Model No. Eff	Dscont	Qty	1 2 3 4 5 Name & Description	Mfr Code	Mfr Part Number
1-1	337-1399-00			2	SHLD,ELECTRICAL:SIDE	80009	337-1399-00
-2	366-1349-00			1	KNOB:GRAY	80009	366-1349-00
	213-0153-00			2	. SETSCREW:5-40 X 0.125,STL BK OXD,HEX	000CY	OBD
-3	366-0494-00			2	KNOBGRAY,W/SETSCREW	80009	366-0494-00
	213-0153-00			1	. SETSCREW:5-40 X 0.125,STL BK OXD,HEX	000CY	OBD
-4	366-1286-00	B010100	B059999	1	KNOB:SIL GY,0.5 X 0.2 X 0.375	80009	366-1286-00
	366-1286-03	B060000	B082989	1	KNOB:SIL GY,0.5 X 0.2 X 0.375	80009	366-1286-03
	366-1690-00	B082990		1	KNOB,LATCH:	80009	366-1690-00
	214-1840-00	XB060000	B082990X	1	PIN,KNOB SECRG:0.094 OD X 0.120 INCH LONG	80009	214-1840-00
-5	----- -----			3	RESISTOR,VAR:(SEE R45,R67A,B EPL)		
					(ATTACHING PARTS FOR EACH)		
-6	210-0583-00			1	NUT,PLAIN,HEX.:0.25-32 X 0.312 INCH,BRS	73743	2X20224-402
-7	210-0940-00			1	WASHER,FLAT:0.25 ID X 0.375 INCH OD,STL	79807	OBD
-8	210-0046-00			1	WASHER,LOCK:INTL,0.26 ID X 0.40" OD,STL	78189	1214-05-00-0541C
					- - - * - - -		
-9	131-0955-00			1	CONNECTOR,RCPT,:BNC,FEMALE,W/HARDWARE	05091	31-279
					(ATTACHING PARTS)		
-10	210-0255-00			1	TERMINAL,LUG:0.391" ID INT TOOTH	80009	210-0255-00
					- - - * - - -		
-11	366-1257-31			1	PUSH BUTTON:CHOP	80009	366-1257-31
-12	366-1257-26			1	PUSH BUTTON:GRAY--AUTO TRIG	80009	366-1257-26
-13	366-1257-21			1	PUSH BUTTON:LEFT-DISPL	80009	366-1257-21
-14	366-1257-22			1	PUSH BUTTON:TRIG RIGHT	80009	366-1257-22
-15	366-1257-23			1	PUSH BUTTON:LINE	80009	366-1257-23
-16	366-1257-24			1	PUSH BUTTON:GRAY--EXT	80009	366-1257-24
-17	366-1257-51			1	PUSH BUTTON:GRAY--1US	80009	366-1257-51
-18	366-1257-60			1	PUSH BUTTON:GRAY--10US	80009	366-1257-60
-19	366-1257-50			1	PUSH BUTTON:GRAY--100US	80009	366-1257-50
-20	366-1257-49			1	PUSH BUTTON:GRAY--1MS	80009	366-1257-49
-21	366-1257-48			1	PUSH BUTTON:10 MS	80009	366-1257-48
-22	366-1257-47			1	PUSH BUTTON:100 MS	80009	366-1257-47
-23	366-1257-56			1	PUSH BUTTON:50 MV EXT	80009	366-1257-56
-24	426-0681-00			12	FR,PUSH BUTTON:GRAY PLASTIC	80009	426-0681-00
-25	333-1456-00			1	PANEL,FRONT:5B13N	80009	333-1456-00
-26	214-1513-00	B010100	B059999	1	LCH,PL-IN RTNG:PLASTIC	80009	214-1513-00
	214-1513-01	B060000	B082989	1	LCH,PLUG-IN RET:	80009	214-1513-01
	105-0719-00	B082990		1	LATCH,RETAINING:PLUG-IN	80009	105-0719-00
					(ATTACHING PARTS)		
-27	213-0254-00			1	SCR,TPG,THD CTG:2-32 X 0.250,100 DEG,FLH	45722	OBD
					- - - * - - -		
	105-0718-00	XB082990	B093149	1	BAR,LATCH RLSE:	80009	105-0718-00
	105-0718-01	B093150		1	BAR,LATCH RLSE:	80009	105-0718-01
-28	386-2019-00			1	SUBPANEL,FRONT:	80009	386-2019-00
					(ATTACHING PARTS)		
-29	213-0229-00			4	SCR,TPG,THD FOR:6-20 X0.375"100 DEG,FLH STL	93907	OBD
					- - - * - - -		
-30	337-1469-00			1	SHIELD,ELEC:REAR	80009	337-1469-00
-31	337-1430-00			1	SHIELD,LIGHT:LAMP	80009	337-1430-00
-32	136-0429-00			1	RETAINER,LAMP:CAM SWITCH	80009	136-0429-00
-33	384-1060-00			5	EXTENSION SHAFT:7.831 INCH LONG	80009	384-1060-00
-34	----- -----			1	CKT BOARD ASSY:MAIN (SEE A1 EPL)		
-35	136-0260-01			1	. SOCKET,PLUG-IN:16 CONTACT,RECT SHAPE	71785	133-51-02-075
-36	214-0579-00			3	. TERM.,TEST PT:BRS CD PL	80009	214-0579-00
-37	----- -----			1	. SWITCH,PUSH:(SEE S80 EPL)		
					(ATTACHING PARTS)		
-38	361-0383-00			2	. SPACER,PB SW:CHARCOAL,0.33 INCH LONG	80009	361-0383-00
					- - - * - - -		
-39	260-1287-00			1	. PUSH BUTTON:(SEE S70A-G EPL)		
					(ATTACHING PARTS)		
-40	361-0384-00			4	. SPACER,PB SW:0.133 INCH LONG	80009	361-0384-00
					- - - * - - -		
-41	260-1288-00			1	. PUSH BUTTON:(SEE S10A-E EPL)		
					(ATTACHING PARTS)		
-42	361-0382-00			6	. SPACER,PB SW:BROWN,0.275 INCH LONG	80009	361-0382-00
					- - - * - - -		

Fig. & Index No.	Tektronix Part No.	Serial/Model No. Eff	Dscont	Qty	1 2 3 4 5 Name & Description	Mfr Code	Mfr Part Number
1-43	260-1310-00			1	. SWITCH,PUSH:(SEE S71 EPL)	80009	260-1310-00
					(ATTACHING PARTS)		
-44	361-0382-00			2	. SPACER,PB SW:BROWN,0.275 INCH LONG	80009	361-0382-00
					- - - * - - -		
					(ATTACHING PARTS FOR CKT BD)		
-45	213-0146-00			4	SCR,TPG,THD FOR:6-20 X 0.313 INCH,PNH STL	83385	OBD
					- - - * - - -		
-46	426-0725-00			1	FR SECT,PLUG-IN:TOP	80009	426-0725-00
-47	426-0724-00			1	FR SECT,PLUG-IN:BOTTOM	80009	426-0724-00
-48	175-0826-00			FT	WIRE,ELECTRICAL:3 WIRE RIBBON	80009	175-0826-00

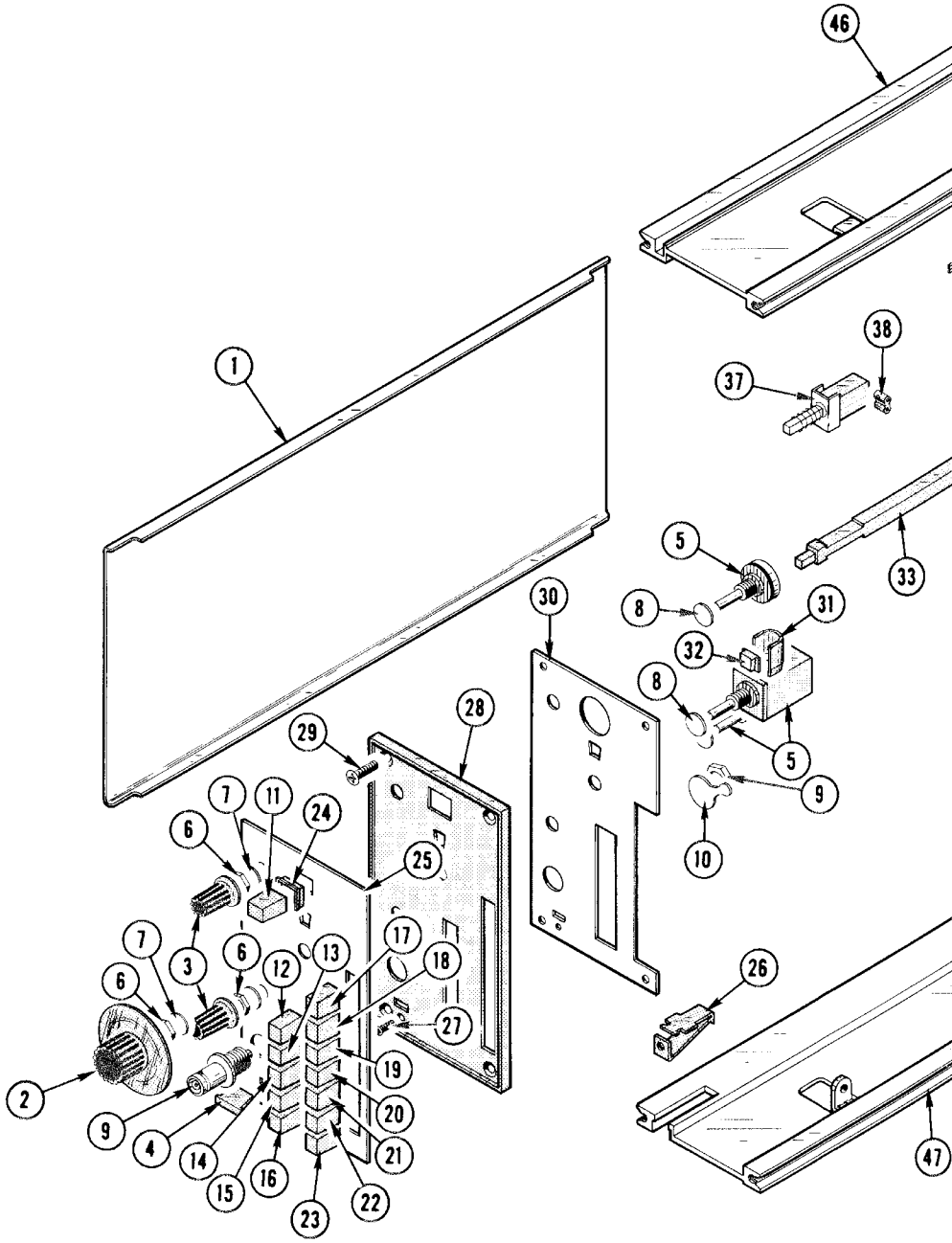
46
1
38
37
5
33
8
30
31
32
8
28
29
5
9
7
11
24
6
25
10
7
3
6
12
13
17
18
6
26
27
2
19
9
20
4
14
21
15
16
23
22
47

Ⓐ

FIG. 1 EXPLODED

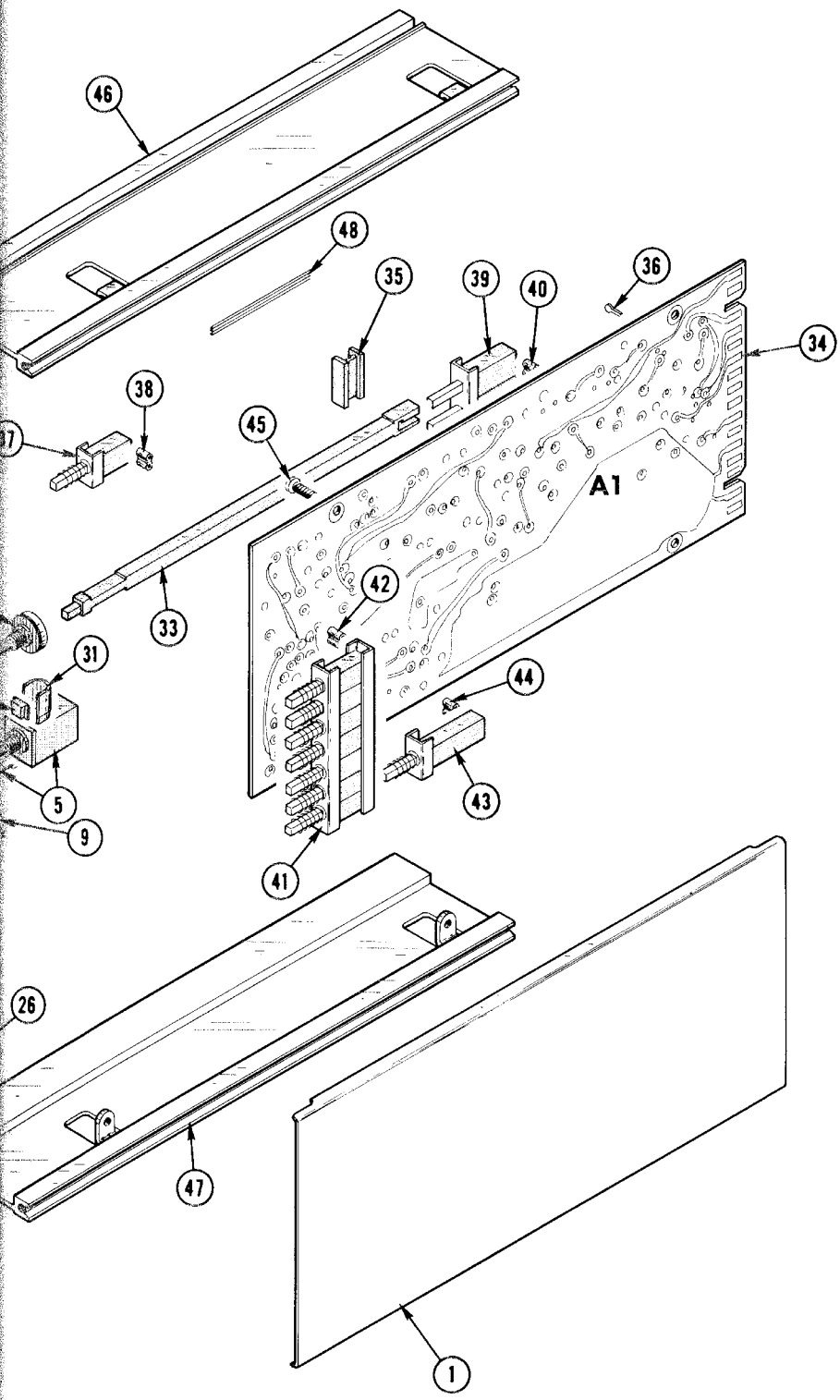

5B13N TIME BASE

STANDARD ACCESSORIES

Fig. & Index No.	Tektronix Part No.	Serial/Model No. Eff	Dscont	Qty	1 2 3 4 5	Name & Description	Mfr Code	Mfr Part Number
	070-1146-00			1		MANUAL,TECH:INSTRUCTION	80009	070-1146-00
	020-0422-00			1		ACCESSORY PKG:SCOPE ASSY KIT KQ-4	80009	020-0422-00

MANUAL CHANGE INFORMATION

At Tektronix, we continually strive to keep up with latest electronic developments by adding circuit and component improvements to our instruments as soon as they are developed and tested.

Sometimes, due to printing and shipping requirements, we can't get these changes immediately into printed manuals. Hence, your manual may contain new change information on following pages.

A single change may affect several sections. Since the change information sheets are carried in the manual until all changes are permanently entered, some duplication may occur. If no such change pages appear following this page, your manual is correct as printed.

SERVICE NOTE

Because of the universal parts procurement problem, some electrical parts in your instrument may be different from those described in the Replaceable Electrical Parts List. The parts used will in no way alter or compromise the performance or reliability of this instrument. They are installed when necessary to ensure prompt delivery to the customer. Order replacement parts from the Replaceable Electrical Parts List.

CALIBRATION TEST EQUIPMENT REPLACEMENT

Calibration Test Equipment Chart

This chart compares TM 500 product performance to that of older Tektronix equipment. Only those characteristics where significant specification differences occur, are listed. In some cases the new instrument may not be a total functional replacement. Additional support instrumentation may be needed or a change in calibration procedure may be necessary.

Comparison of Main Characteristics

DM 501 replaces 7D13		
PG 501 replaces 107	PG 501 - Risetime less than 3.5 ns into 50 Ω.	107 - Risetime less than 3.0 ns into 50 Ω.
108	PG 501 - 5 V output pulse; 3.5 ns Risetime	108 - 10 V output pulse 1 ns Risetime
PG 502 replaces 107		
108	PG 502 - 5 V output	108 - 10 V output
111	PG 502 - Risetime less than 1 ns; 10 ns Pretrigger pulse delay	111 - Risetime 0.5 ns; 30 to 250 ns Pretrigger pulse delay
PG 508 replaces 114	Performance of replacement equipment is the same or better than equipment being replaced.	
115		
2101		
PG 506 replaces 106	PG 506 - Positive-going trigger output signal at least 1 V; High Amplitude output, 60 V.	106 - Positive and Negative-going trigger output signal, 50 ns and 1 V; High Amplitude output, 100 V.
067-0502-01	PG 506 - Does not have chopped feature.	0502-01 - Comparator output can be alternately chopped to a reference voltage.
SG 503 replaces 190, 190A, 190B	SG 503 - Amplitude range 5 mV to 5.5 V p-p.	190B - Amplitude range 40 mV to 10 V p-p.
191		
067-0532-01	SG 503 - Frequency range 250 kHz to 250 MHz.	0532-01 - Frequency range 65 MHz to 500 MHz.
SG 504 replaces 067-0532-01	SG 504 - Frequency range 245 MHz to 1050 MHz.	0532-01 - Frequency range 65 MHz to 500 MHz.
067-0650-00		
TG 501 replaces 180, 180A	TG 501 - Trigger output-slaved to marker output from 5 sec through 100 ns. One time-mark can be generated at a time.	180A - Trigger pulses 1, 10, 100 Hz; 1, 10, and 100 kHz. Multiple time-marks can be generated simultaneously.
181		181 - Multiple time-marks
184	TG 501 - Trigger output-slaved to market output from 5 sec through 100 ns. One time-mark can be generated at a time.	184 - Separate trigger pulses of 1 and 0.1 sec; 10, 1, and 0.1 ms; 10 and 1 μs.
2901	TG 501 - Trigger output-slaved to marker output from 5 sec through 100 ns. One time-mark can be generated at a time.	2901 - Separate trigger pulses, from 5 sec to 0.1 μs. Multiple time-marks can be generated simultaneously.

NOTE: All TM 500 generator outputs are short-proof. All TM 500 plug-in instruments require TM 500-Series Power Module.

TEKTRONIX®
committed to technical excellence

MANUAL CHANGE INFORMATION

PRODUCT 5B13N
070-1146-00

CHANGE REFERENCE M31689
DATE 5-11-77

CHANGE:	DESCRIPTION

EFF SN B080000-up

ELECTRICAL PARTS LIST AND SCHEMATIC CHANGES

CHANGE TO:

A1	670-1628-01	MAIN Circuit Board Assembly
DS67	150-0130-00	LAMP,INCANDESCENT
R68	315-0270-00	RES.,FXD,CMPSN:27 OHM,5%,0.25W

TEKTRONIX®
committed to technical excellence

MANUAL CHANGE INFORMATION

PRODUCT 5B13N	CHANGE REFERENCE M32690
070-1146-00	DATE 11-16-78

CHANGE:	DESCRIPTION

EFF SN B090000

ELECTRICAL PARTS LIST CHANGES

CHANGE TO:

A1	670-1628-02	CKT BOARD ASSY:MAIN
R33	311-1228-00	RES.,VAR,NONWIR:10K OHM,0.5W
R35	311-1228-00	RES.,VAR,NONWIR:10K OHM,0.5W
R61	311-1228-00	RES.,VAR,NONWIR:10K OHM,0.5W

Tektronix®
COMMITTED TO EXCELLENCE

MANUAL CHANGE INFORMATION

Date: 8-21-79 Change Reference: M38094

Product: 5B13N TIME BASE Manual Part No.: 070-1146-00

DESCRIPTION

EFF SN B093220

ELECTRICAL PARTS LIST AND SCHEMATIC CHANGES

ADD:

C40	283-0067-00	CAP.,FXD,CER DI:0.001UF,10%,200V

C40 is located on the MAIN circuit board assembly.

C40 is added from pin 4 of U30 to ground.