TEK CUSTOMER PRODUCT SERVICING INFORMATION

May 1989, Issue 55

SERVICETEKNOTES

TEKTRONIX—EVER SEARCHING FOR NEW AND BETTER PRODUCTS TO SERVE YOUR NEEDS!

Tek 222–Handheld 10 MHz Digital Storage Oscilloscope

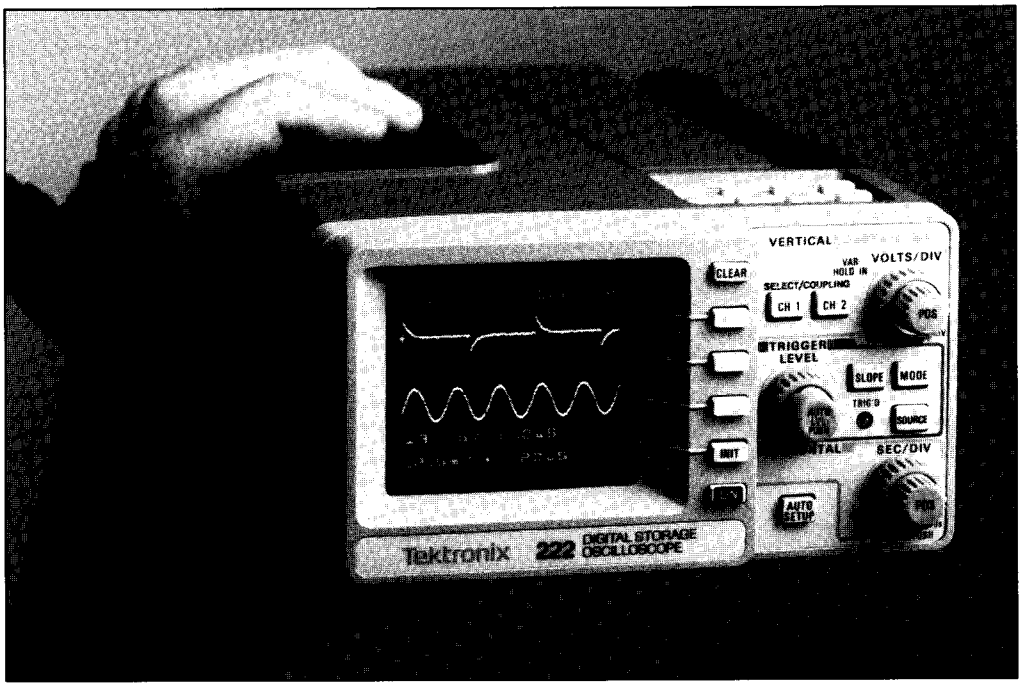

Introducing the ultra-portable digital scope that's packed to go!

Only Tek could pack so much into so little — and still make it easy to use.

Published by Tektronix
Service Publications Support

Tektronix®
COMMITTED TO EXCELLENCE

TO OUR CUSTOMERS

The Tektronix Service Organization firmly supports a policy of assuring continued utility of products sold by Tektronix.

This publication is meant to provide technical information to the customer who has elected to maintain his own Tektronix products. It contains product servicing information and is written for the technician. The notation at the bottom of each article (W^2 Issue: XX-X) signifies that the article has previously been published in a publication known as *WIZARDS' WORKSHOP*.

Articles are submitted primarily by Corporate Service Support & Planning personnel thoroughly familiar with the products they support.

SERVICETEKNOTES also encourages you, the customer, to submit articles for publication. If you have knowledge of a technique, procedure or idea that enables you to service your Tektronix product more effectively, write it up so others may benefit from your experience.

Articles for publication should be submitted directly to:

TEKTRONIX, INC.,
SERVICETEKNOTES, Editor
P.O. Box 4600, M/S 94-925
Beaverton, Oregon 97076 - 9958

The Editor and staff of *SERVICETEKNOTES* provide the material in this publication as a service to users of Tektronix products. While we have tried to be diligent in assuring the accuracy of the material which we have printed, we cannot guarantee its accuracy. Neither *SERVICETEKNOTES*, its editor and staff, Tektronix, Inc., nor its representatives assume any responsibility for the use of the material printed in this publication; nor can we assume any responsibility for any errors or for the resulting effects of any errors.

SERVICETEKNOTES is distributed by Service Operations Support free of charge to customers who maintain their own Tektronix equipment. A customer may ask to be added to the distribution list by applying through his local Tektronix Sales Engineer. Please send all pertinent mailing information to *SERVICETEKNOTES* , M/S 94-925, Beaverton.

TABLE OF CONTENTS

(Continued on the following page)

TABLE OF CONTENTS

New Tek 222 Handheld Digital Storage Oscilloscope

TEK's 222 Introduces Unprecedented Power to the World of Handheld Scopes

Automated setups and waveform storage offer outstanding ease-of-use and productivity.

Beaverton, Oregon —
Tektronix has announced a new 4 1/2 pound handheld digital storage oscilloscope (DSO). The Tek 222 delivers dual-channel 10 MHz performance in a compact package measuring only 3 1/2 X 6 1/4 X 10 inches. Yet, the 222 provides powerful features including automatic setup and digital save/recall of both front-panel settings and captured waveforms. It also provides a built-in battery and two independent isolated channels for making elevated ground measurements safely.

A New Class of Toolbox Instruments —
The Tek 222 Oscilloscope is a useful tool in a wide range of troubleshooting applications including process control, electromechanical, avionics, power stations, medical equipment, and manufacturing and environmental controls.

Its convenient size, light weight, and easy to use front panel make it a good choice for any service application. Sandra Lowe, general manager of the handheld business unit, explains, "We call the 222 a 'toolbox' instrument because it is designed to be a serviceperson's personal oscilloscope, easily fitting in a toolbox with all the other tools of the trade. It also comes with built-in rechargeable batteries, because we know it's not always easy or convenient to find a power outlet at the site."

Ruggedly Built for Proven Reliability —
The new 222 scope has been ruggedly designed to meet the reliability needs of the service industry in a full range of environmental conditions. For example, impact resistant materials protect the scope's electronic components from damage. Lowe elaborates, "For an electronic instrument to survive the rough and tumble world of field use it must be impact resistant, shock-proof, and well protected. For extra measure, the 222 meets the MIL-T-28800D standards for altitude, vibration, and shock."

High-powered Features Packed in a Small Footprint —
Although the 222 is small enough to be handheld, it offers a number of high-powered digital features. For example, glitch capture up to 100 ns, dual channels, 10 MHz bandwidth, and 10 MS/sec sample rate are all features normally found on larger oscilloscopes.

The 222 features the ability to float grounds to high voltages (400 V) for power supply and motor control measurements that are common in industrial environments. You can hold the 222 without risk when ground is floating, because its integral probes leave no metal exposed. And with their own carrying pouch, the probes won't get lost or left behind. *(Continued on the following page)*

222 Handheld Scope *(Continued from page 1)*

PC Interface feature... allows users to connect their scopes to computers for data analysis, automatic acquisition, or record keeping.

Productivity-Enhancing Features —
Such features as automatic trigger, automatic setup, and save/recall of front-panel setups, make the 222 very easy to use and save operator time and effort. In addition, users can acquire up to four waveforms, store them, and recall them when needed for waveform comparison or analysis. This is especially useful when working at remote sites.

Press Auto Trigger, and the 222 will automatically locate trigger points and select the correct voltage level needed to capture a waveform.

The scope's AutoSet feature is ideal for signal acquisition and display in first-time applications. Just press a single button and the scope does the rest!

Convenience and Safety Features —
The 222 includes a carrying case, battery charger, and optional spare battery. The scope's snug, nylon carrying strap provides comfortable handling and an easy grip. With the convenient neck strap, users can operate the scope with one hand, and use the other hand probe positioning or, if necessary, to steady themselves while making measurements from precarious positions.

PC Interface Feature —
The 222 is fully programmable via an RS-232-C interface which comes standard. This allows users to connect their scopes to computers for data analysis, automatic acquisition, or record keeping. In addition, the instrument is U.L. listed, as well as V.D. E. and C.S.A. certified. Integral probes provide safety and eliminate extra handling and unnecessary connections.

Pricing and Availability —
The Tektronix 222 Handheld DSO is available and is priced at $2,350. It comes with the standard Tektronix 3-year warranty and may be ordered directly from Tektronix sales representatives or authorized Tektronix distributors.

Tektronix is a leading manufacturer of electronic products and systems in the areas of test and measurement, computer graphics, and communications. Sales in fiscal 1988 totaled $1.4 billion. The company has approximately 16,000 employees worldwide.

For further information on Tektronix products, write on company letterhead to:

Tektronix, Inc.
Portable Test Instruments Division,
P.O. Box 1700,
Beaverton, Oregon 97075

or call toll free 1-800-426-2200. ◊

Thinking About Traceability

Additional material has been included in this issue as *Pullout A.*

For several years, Tektronix has supported and conformed to the practices and procedures associated with the concept of traceability, as defined by MIL-STD-45662 and other earlier related documents.

The MIL-STD has recently been revised to -45662A. With this revision, and a concurrent increasing interest in the concepts surrounding traceability within more industry segments, it was felt that a review of parts of the specifications could be beneficial to your understanding.

Enclosed with this issue as an appendix is such a review. Refer to ***Pullout A***. This material was developed for the facility that might just now be investigating traceability and its requirements. As published here, the material is simply a review of some of the key provisions of the MIL-STD's detailed specifications, and is only intended to assist the reader to start asking the right questions about the provisions of MIL-STD-45662A.

Keep the purpose of the material in mind as you review it. And, if you can obtain a current copy of the new standard from your Standards personnel, having it in hand for reference will also assist in understanding.

For detailed direction, policy or procedural questions about how Tektronix operates within the scope of MIL-STD-45662A, contact your Metrology Lab, or contact Factory Service Metrology, Del Knapp, (503) 642-8658, Delivery Station 56-117.

Bill Bean
Product Service Manager
58-699, (503) 627-1677

◊

Product Service Training Schedule *(Pullout B)*

An updated *Product Service Training Schedule* has been included as ***Pullout B*** in the back of this publication. This schedule will be updated and included in future editions

W2 Issue: 19-1

P6461/P6461E: Probe Application Note *(Pullout C)*

In this issue is a copy of a P6461 Data Acquisition Probe Application Note: *Using the P6461 Probe for Maximum Accuracy*. See ***Pullout C***.

W2 Issue: 19-4

PG506A: Excessive Noise on Standard Amplitude Reduced

Ref: Mod #67434
S/N B010414

Noise is being coupled into the +120 V supply ground causing excessive noise on the Standard Amplitude output signal. To correct this, a diode was added in series with the drain of A2Q1010.

To install CR1010 lift the drain (middle Lead) of A2Q1010 and add Tektronix P/N 152-0333-00 in series with the cathode towards the drain.

W2 Issue: 19-4

SPG170A: Front Panel Change

REF: SPG170A Series Instruction Manual, P/N 070-5965-00

MOD #65140

MOD #65140 updated the SPG170A Front Panel to a membrane switch panel similar to those used on other members of the TSG/SPG family.

The old front panel (P/N 333-3341-00) and the front panel circuit board (P/N 670-9692-00) can be updated to the new version by ordering part number 333-3341-01.

These panels should only be updated upon request or upon failure.

MOD #65140 is installed in new instruments from the factory starting with S/N B020609.

W2 Issue: 19-3

7B80/7B85: Single Sweep 'Ready' Light Erratic

Ref: 7B80 Instruction manual 070-1959-00
7B85 Instruction manual 070-1961-01

A Service Action Request from Australia has resulted in a modification to the 7B80 and 7B85. The problem was that the Single Sweep 'Ready' light tends to exhibit erratic, unstable characteristics when in an electrically 'noisy' environment, or in an area with high ambient light. To correct this problem, LID Engineering Change Number 69123 was instituted to add a resistor to the circuit. A 10 k resistor is being added between the junction of R-232/R-233 and the nearest +5 Volt supply point. These components are part of the Logic Circuit and are shown on schematic #3 in the Instruction Manual. All 7B80s and 7B85s below B040000 are affected by this change. All 7B50As are also affected by this change. Since the 7B50A is no longer in production, this information will be documented only.

W2 Issue: 19-4

336/336A: Circuit Board Interconnect Cable Replaceable Part Number

Ref: 175-8656-00

The interconnect cable used in the 336/A to connect J810, J820, J830, and J840 is not pictured in the manual for the 336. If replacement of this cable is necessary, order Tektronix part number 175-8656-00.

W2 Issue: 19-4

520/A Series: Replacement Pots Now in Kits

Ref: 520A Instruction Manual, P/N 070-1709-00
521A Instruction Manual, P/N 070-1794-00
522A Instruction Manual, P/N 070-1874-00

Due to a possibility of potentiometers being sourced from two different vendors, in two different configurations, replacement kits have been established for the following 520/A series controls.

CKT #	Desc	Kit #
R403/S403	A GAIN	050-2526-00
R413/S413	B GAIN	050-2526-00
R685/S685	LUM GAIN	050-2527-00

These kits will provide wiring/configuration instructions, and will also provide attaching circuit parts where previous parts would no longer have sufficient lead lengths.

Use the appropriate kit for replacement on an "as fails" basis.

W2 Issue: 19-4

760 Series: CRT Heater Voltage Reduced

REF: 760 Series Instruction Manual, P/N 070-5992-00

MOD #65437

MOD #65437 changes A1R124 from 7.5 ohms to 10 ohms (P/N 315-0100-00) in order to bring the CRT filament voltage closer to nominal spec.

Although the modification does not present a significant change to operational life, it is suggested that this change be made on any 760 returned for service.

MOD #65437 will be installed in new instruments from the factory starting with S/N B020641.

W2 Issue: 19-3

1410 Series: IC Socket Replacement

During several service/rebuild attempts, it has been noted that when an IC has been removed from a socket in an older instrument, it was usually quite difficult to correctly solder back into the circuit board.

In most cases age, IC pin coatings, and socket types contributed to the common problem. In older instruments, many IC's that were socketed, also had pins that were silver plated. This silver plate oxidized over time, creating connection (and re-solder) problems. These older instruments also may have contained sockets that were subsequently judged to have reliability problems, and have been replaced with better devices in most of our product lines.

At the factory, we have found that most IC's that were installed in sockets have smaller amounts of oxidation on the pins. This small amount has also usually been conductive, but will not take solder.

If you desire to use an IC socket, the current types, such as those from Burndy, will usually grip tight enough to allow good contact with older IC pins.

If you wish to discard the socket entirely, our experience shows that a lot of time may be saved by installing a new IC instead of trying to fight old oxidation, bad solder joints, etc.

New IC pins are solder coated and should not be a problem in solder or sockets. Also, IC types that use gold pins don't suffer from the oxidation problems.

W2 Issue: 19-3

1480 Series: Volts Full Scale Pot Now in a Kit

Ref: 1480 Series Instruction Manual,
P/N 070-2338-00
MOD #64569

Due to popular demand, a kit has been established for replacement of R9828 (Volts Full Scale, Variable) in the 1480 Series waveform monitors.

The new kit, P/N 050-2338-00, provides necessary ground hardware for proper operation. It also provides pin-out configurations, for correct wiring of either of two types of potentiometers, that may be delivered if a replacement part for R9828 is ordered.

MOD #64569 is being installed in new instruments from the factory starting with S/N B106115 (1480R series) and B094559 (1480C series).

W2 Issue: 19-4

1730 Series/1740 Series: Option 16 Kits Available

REF: 1730 Series Instruction Manual,
P/N 070-4474-02

1740 Series Instruction Manual,
P/N 070-4473-00

Previous articles have mentioned the addition of Option 16 to the 1730 Series and 1740 Series products. This option provides a 90 Hz (100 Hz PAL) sweep for monitoring RF and servo waveforms within composite digital (D2) video recorders.

To accommodate those owners of 1730's and 1740's that may wish to add this option to their instrument, field kits are now available.

For the 1730 Series, the kit part number is 040-1271-00.

For the 1740 Series, the kit part number is 040-1270-00.

It is requested that field installations of these kits in the service centers be accomplished by ordering and using the kits instead of "off the shelf." We wish to be able to judge the relative merits of offering these kinds of kits, and the order history against the part number is the only method of easily doing so at the present.

W2 Issue: 19-3

2220/2221/2230: Intermittent Failures

When installed incorrectly, the wiring harnesses used in the 2200 DSO products can cause intermittent failures.

The ribbon cable should be installed on the pins by pushing on the housing for the connectors. If the housing is not installed all the way, any pin inside the housing has room to move, causing an intermittent contact.

To ensure a good contact, install the ribbon cable by pushing on the housing, then pull on the wires. This will enable the connector to grip the pin and make firm contact.

If an instrument comes in with an intermittent failure, check the ribbon cables, and reinstall if necessary.

W2 Issue: 19-1

2245/2245A/2246/2246A: Heat Sinks Added on the Switching Transistors

Ref: P/N 214-4042-01

A couple of heat sinks (P/N 214-4042-01) have been added on top of two transistors (A18Q2209, Q2210) to prevent the transistors from getting too hot and then failing.

Manufacturing started using heat sinks when the 2245A/2246A were introduced. However, some late 2246's and early 2246A's did not have the heat sinks. Those instruments, which are within the following serial number ranges, must have the two heat sinks installed when received for service.

- 2246 (B045411 - B045576)
- 2246A (B010100 - B010305)

The heat sinks, which have the bottom edges clipped off (a must) to prevent them from touching other components, can be seen from the right side of an instrument when a cabinet is removed.

Old 224X's are also recommended to have two heat sinks installed only when the power supply board is being worked on.

Notes:

- Two part numbers (151-0476-00 and 151-0852-00) have been used for the two transistors mentioned above. The P/N 151-0852-00 has been discovered to dissipate more power than the other. However, both perform well with heat sinks on.

- Manufacturing is currently using the heat sink (P/N 214-3796-00) which has one leg soldered on the board. This heat sink surely does not fit in an old supply board.

W2 Issue: 19-4

2245/2245A/2246/2246A/2247A: Readout Interferes with Sweep or Locks-up in Beamfind or 5 µs Horizontal Jitter

Ref: P/N 234-0401-21

Two more lot dates (839 155P, 836 043P) of the horizontal pre-amp IC's used in the 224X's have been found to cause a horizontal jitter at 5 µs.

A defective IC will measure less than 2.4 KΩ between pins 1 and 4 out of circuit. For accurate reading when measuring the IC, use the 20 KΩ range of the DMM. A lower range could give a wrong reading.

Customer service stock has been checked and corrected.

W2 Issue: 19-4

2245/2245A/2246/22461Y/2246A/2247A: Unstable Trigger, Horizontal or Cursor Jitter

Ref: P/N 285-1300-01

There have been field failures due to a noisy capacitor used in the sample and hold circuit, located on the microprocessor board.

Below are the failure symptoms and the associated caps:

- Horizontal jitter ..... (C2305)
- Reference cursor jitter..... (C2301)
- Delta cursor jitter ..... (C2302)
- Unstable "A" triggering and/or "A" trigger light is on all the time ..... (C2303)
- Unstable "B" triggering and/or unstable (DC, +PK, -PK, PK/PK) measurements and cursors ... (C2306, C2324)

The defective capacitors are black. Capacitors which are red in color are more reliable.

Customer service stock has been checked. All black caps have been replaced by the red ones.

Our Engineers are working with our vendors to resolve this issue so that either capacitor can be used in this application.

W2 Issue: 19-1

2245A/22461Y/2246A/2247A: Noise on Trace While in Chop Mode Corrected

MOD #69124

While in Vertical Mode Chop the traces displayed on the screen may seem noisier than when in the Alternate mode. A guideline for acceptable noise is 0.1 division.

A MOD has been implemented to reduce the amount of noise observed while in chop. To install this MOD add A10C666, Tektronix P/N 281-0819-00, in parallel with A10R666.

W2 Issue: 19-3

2245A/2246A/2247A: Two Step Auto Setup Feature Added

Ref: 68805
S/N: 2245A B020100
2246A B020100
2247A B020100

A feature has been added to the 2245A, 2246A, and 2247A instruments which allows the customer to hold in the auto setup button for "minimum" auto setup.

The min setup controls, which could be changed while in auto setup, are listed below:

- Horizontal Mode
- A and B Trigger Level
- Vertical Input Coupling
- Vertical Mode
- Ch 1 and Ch 2 Volts/Div
- A and B Sec/Div
- Cursors/Time Position

Information on two step auto is available in Appendix A, of the operators manuals for the products. The part numbers are listed below:

Instrument	Manual P/N
2245A	070-6558-01
2246A	070-6556-01
2247A	070-6373-01

A product enhancement kit has been set up for the **2246A** only to provide the two step auto setup feature. Order Tektronix P/N 040-1278-00.

W2 Issue: 19-4

2247A: Heat Sink Required When Troubleshooting A16U1905

When troubleshooting the processor board in the vicinity of U1905 it may be necessary to remove the heat sink from the Fast Counter Logic I.C.

Since this I.C. runs hot, a heat sink is available, which will allow access to the components located around U1905 while troubleshooting. Order Tektronix part number 214-3503-00.

W2 Issue: 19-2

2247A: Service Manual Now Available

The *2247A Service Manual* is now available. Order Tektronix part number 070-6367-00.

W2 Issue: 19-2

4126/4230/4330 Series Option 33: Liquid Crystal Shutter (LCS) Connector Orientation

Ref: 4115/4120 Series Field Service Manual, P/N 070-5270-02

19" Display Field Service Manual, P/N 070-7243-00

4230 Series Field Service Manual, P/N 070-6647-00

When servicing the 4126, 4230, or 4330 Series Option 33, Stereoscopic Display's LCS (P/N 119-2647-00), or the Shutter Driver board (P/N 671-0427-00), make sure that the LCS cable connector is positioned correctly onto J1, located on the Shutter Driver board.

A close examination of the LCS cable's black harmonica connector reveals that the pin 1 marking is not an arrow, but is represented by a single digit number (usually '2'). The same side of this connector that shows the number, also has the connector pin locking holes.

When installing this connector onto J1, position the number on the connector to J1, pin 1 (top most pin on J1 when Shutter Driver board is mounted on the Deflection Switch Daughter board). Also, note that the locking holes in the same side as the number on the connector are positioned towards the deflection side of the display. If this connector is positioned backwards onto J1, the LCS will not work correctly when in stereo mode, and may damage the LCS and/or components on the Shutter Driver board.

W2 Issue: 19-3

422X/432X: Possible Defective Voltage Selector Switch

Ref: 4220 Field Service 070-6646-00

Affected Serial Numbers:

4224	B020890 to B020920
4225	B022250 to B022360
4324	B030210 to B030215
4325	B030450 to B030465

There is a possibility that the 422X/423X products, between the above serial number range and set from the factory for 115 V, may have been shipped with a defective line voltage selector switch. A small number of switches, PN 260-2394-00, were found to be assembled incorrectly from the vendor, which makes the voltage selection backwards.

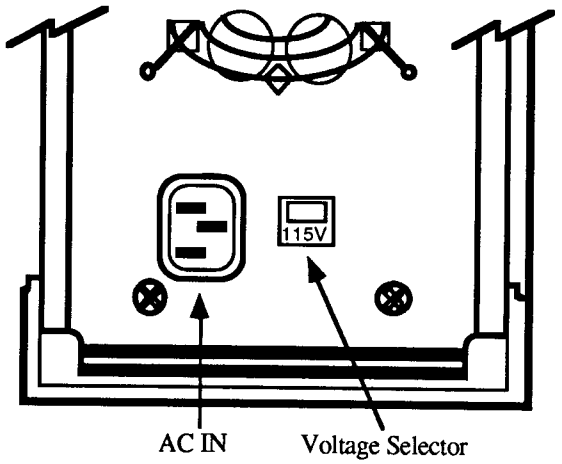

422X Graphics Module

To check for a faulty switch: with the Graphics Module on its side (floppy drive at the top) the Voltage Selector switch should be right side up. If the 115 V/230 V slide switch label is upside down, replace with a new switch. The power supply module does not need to be removed from the chassis; however, the power supply module cover does. Unsolder the two wires at the switch and resolder wires to terminals 2 and 2a of the replacement switch.

W2 Issue: 19-4

4220/4230: Modularized Field Service Manuals Replace Original Field Service Manuals

Ref: See Below

The 4220/4230 Field Service Manuals, P/N 070-6646-0X and P/N 070-6647-0X, have been replaced by the modularized 4220/4230 Field Service Manuals. Future revisions will be made only to the modularized manuals; not the original manuals.

The following is a list of part numbers that make-up the modularized 4220 Field Service Manual:

070-7375-00 — 4220 Field Service Overview (includes binder)
070-7374-00 — 2D Graphic Engine Module (GEM) Field Service
070-7242-00 — 16" Display Field Service
070-7243-00 — 19" Display Field Service
070-7244-00 — VT200 Keyboard And Mouse Field Service

The following is a list of part numbers that make-up the modularized 4230 Series Field Service Manual:

070-7376-00 — 4230 Field Service Overview (includes binder)
070-7377-00 — 3D GEM Field Service
070-7242-00 — 16" Display Field Service
070-7243-00 — 19" Display Field Service
070-7244-00 — VT200 Keyboard And Mouse Field Service

W2 Issue: 19-4

4230/4330 Series: MIS Box's Cable Is Available To Order

Ref: 3D GEM Field Service Manual, P/N 070-7377-00

4230 Series Field Service Manual, P/N 070-6647-00

The MIS Box's Interface Cable, P/N 174-0634-00, can be ordered to replace the existing cable without having to order the complete MIS Box.

Note that the part number of the complete MIS Box is 670-9780-00, which includes the cable and the plate with its plastic clips (which attaches to the back of the 4230 series display).

W2 Issue: 19-3

4237/4337/CM12: Board Green Vertical Stripe Modification

Ref: Corporate Mod #68560

4230 Field Service Manual, P/N 070-6647-00

2-D/3-D Graphics Command Summary Manual, P/N 070-6643-01

670-9615-02/01/00

It has recently been reported that green vertical stripes appear when a green field is displayed, and when a CM12 board (670-9615-02 thru -00) is present in the 4230 series terminals. However, not all CM12 boards will display these vertical stripes. These vertical stripes can also be copied to a 4693RGB.

To test for this anomaly, type the following commands:

1. Press SETUP key (terminal goes into setup mode)
2. ESC TM 1 1 1 <CR> (Put into the RGB mode)
3. ESC TB 0 * 0 <CR> (* can be any number from 0 to 100; smaller number displays small intensity of green, and a larger number displays a larger intensity of green; good numbers to try are 20, 40, 60)

These commands will put the terminal in RGB mode and then display a green screen with the ability to increase or decrease the intensity of the green. Changing the other two zeros to higher numbers, in the ESC TB command, will increase red and blue screen intensities.

Some CM12 boards may exhibit green vertical stripes over the entire green screen. These green vertical stripes are caused by oscillations occurring on the green channel of the video output from the CM12 board. The following modification corrects this green vertical stripe anomaly.

Locate and remove transistor Q4600 and install transistor P/N 151-0350-00.

After the modification, the 670-9615-02 rolls to suffix level -03.

Ref: 4230 Frame Buffers Service Manual, P/N 070-6657-99

W2 Issue: 19-1

4319: "Buildroot" Will Not Install DiNEX

Ref: UTek System Administration;
P/N 070-6621-01;
SPRs #00147 and #00350

In the V3.0 release, the 4319 P01 miniroot does not install DiNEX when executing "Buildroot." The next UTEK release V4.0, will have this corrected.

A work-around can be done by booting miniroot then mounting /dev/ds00a by executing the following commands:

```
cd <space> / <CR>
mkdir <space> mnt <CR>
/etc/mount <space> /dev/ds00a <space>
/mnt <CR>
mnt/etc/mkboot <space> /dev/rsd00o
<space> /mnt/diags/DiNEX <CR>
/etc/unmount <space> /dev/ds00a <CR>
rm <space> -r <space> /mnt <CR>
```

W2 Issue: 19-4

433X: Replacement Power Switches

Ref: 4301/4320/4330 Field Procedures,
P/N 070-6700-01

There has been some confusion regarding the correct part number of the replacement power switch on the 4301, or CEM side of the 43XX Workstation. The correct part number is 174-0874-00, which includes the switch and attached cabling.

The correct part number for the 423X side is 174-0633-00, which includes the power reset, selftest switches, and attached cable.

W2 Issue: 19-2

7250: Memory Erase

Five 7250 memory modules (7200) have been returned to Beaverton in the last three months as FRUs. Two of these modules have been found to test O.K. These memory modules still had data stored on them. There are some sites that have 7250s where removal of data from the site would constitute a breach of security.

To prevent this situation from occurring, we strongly advise that the memory backup battery be disconnected after removing the 7200 memory module from the 7250. This will erase any data that is stored in the module.

To disconnect the batteries, remove the cover from the 7200 memory module. Locate S13 near the batteries. Change the jumper from the '1' position to the '0' position. Replace the cover and the cover screws.

W2 Issue: 19-4

◊ ◊ ◊

Thinking About Traceability

William C. Bean

STATEMENT OF INTENT

This booklet has been prepared as a guide for initial introduction to some of the basic concepts and practices of traceability. Its sole intent is to provide information about current perceptions, thereby allowing the user to further research the subject of traceability with a working knowledge of the scope, and of some of the possible resources available.

This booklet was prepared from information that included an advanced copy of MIL-STD-45662A. However, the information contained herein is not to be considered as an official guideline for compliance with this standard or any other applicable documents.

Where questions of compliance with MIL-STD-45662A or any other standard arise, it is the responsibility of the user of the standard to determine compliance within his own organization, and with any other outside organizations or entities.

Tektronix, Inc., and the author assume no liability for any consequences or damages arising from the use or misuse of any information contained within this document.

CONTENTS

INTRODUCTION

- Background -

Traceability, as a concept and as a working practice, began in the early forties with a government need to verify the quality of goods and services that were obtained from vendors and contractors. This concept has since evolved into a documented set of requirements that are a consensus of the needs of the various government and military agencies.

Today's result is a military standard, MIL-STD-45662A entitled "Calibration System Requirements". MIL-STD-45662A is in effect this year although some time is expected to lapse as industry gears up to accommodate the new requirements of this standard. Although the previous standard, MIL-STD-45662, is still being used by some, the updated (A) version will be the basis for the observations, definitions and discussions that are the subject of this booklet. The intent is to provide the user with the information that will be necessary for future planning.

MIL-STD-45662 was supported and further explained by a document entitled MIL-HDBK-52A. A revised version of this handbook in support of -45662A was not available at the time of this print, but is expected to be available mid 1989. A copy of the revision will be highly recommended as an adjunct to your understanding of the impact of the new standard.

- Applicability -

Although "traceability" is simply a term that has been assigned a specific definition within the MIL-STD, generally accepted usage of this term with a large segment of the test and measurement industry is now given to imply conformance to the intent of the standard, and in many cases, to the detailed requirements. It is also important to note here that discussions about the subject and details of traceability continue to be colored by a wide variety of individual and organizational interpretations of the details. Detailed explanations and discussions are routinely published in trade journals and other media, but variances in opinion are likely to continue.

The detailed requirements of MIL-STD-45662A should only be considered legal and binding when the standard is actually mentioned in a contract for goods or services between two parties. However, be aware that references to "government" or "military" standards within a contract or service request should also be interpreted to mean compliance with the MIL-STD. Beyond these contractual implications, the standard can still be a useful reference for the purpose for which it was originally drafted - Quality Assurance.

With this in mind, it is suggested that a review of the processes and requirements of "traceability", as understood and used by these industries, will provide a valuable insight into several aspects of quality assurance. Subsequent to a thorough understanding of the potential requirements, the ultimate responsibility for determining any particular level of compliance may seem to lie within the individual organization. But, any outside auditor may have the final say. In this case, it will be up to your organization to provide satisfactory proof of compliance. Keep your options open. Once you venture outside of your organization to provide or acquire traceable goods or services, you will be subject to the interpretations and expectations of others.

DEFINITIONS

MIL-STD-45662A provides definitions of several terms appropriate to the subject of traceability. From these, two are provided below in order to provide a common frame of reference for the discussions that will follow. Review the others, but keep these two in mind.

- Calibration -

"The comparison of M&TE (Measuring and Test Equipment) or Measurement Standards of unknown accuracy to a Measurement Standard of known accuracy in order to detect, correlate, report, or eliminate by adjustment any variation in the accuracy of the instrument being compared."

- Traceability -

"The ability to relate individual measurement results through an unbroken chain of calibrations to one or more of the following:

- U.S. national standards maintained by the U.S. National Bureau of Standards (NBS) and the U.S. Naval Observatory.
- Fundamental or natural physical constants with values assigned or accepted by the U.S. NBS.
- National standards of other countries which are correlated with U.S. national
- Ratio type of calibrations.
- Comparison to consensus standards."

In approaching the discussions about what needs to be addressed in order to establish traceability within an organization, a departure will be made from the strict definitions of these two terms "Calibration and Traceability". The concept will be to represent two principle tasks associated with the establishment of a calibration system.

"Calibration" will represent the ability to actually do the physical comparisons correctly, with the equipment at hand. This should be the first major task. From here, your organization should be able to assess the immediate financial impact associated with traceability in terms of what equipment or outside services may need to be acquired.

"Traceability", the second major task, will discuss the many kinds of written documents used to prove to yourself and others that you are in compliance with the MIL-STD.

CALIBRATION AND TEST EQUIPMENT

A critical path item in the long road toward establishing a facility as traceable will be whether or not the job can be properly accomplished with the equipment at hand. And, even though your facility may not be required to meet all of the MIL-STD, a thorough capabilities assessment is always appropriate from a quality assurance viewpoint. In either case, the task of ensuring that measurements are correct implies that the measuring devices are within acceptable tolerances. These acceptable tolerances, in turn, must be verified by other devices within your organization, or sent outside to facilities that will provide this service. Your first task then will be to determine all of the acceptable tolerances and ability of your equipment to meet or exceed these tolerances at each level of the calibration chain.

Only one portion of this task has been done for you. The MIL-STD specifies an minimum accuracy of better than 25% of the characteristic that you wish to measure. This accuracy will be addressed again in the next section, but should be kept in mind as you proceed through your capabilities assessment in this section.

- An Equipment Survey -

A walk-through of your facility's equipment, with a vision of where you want to be upon completion, will be your initial approach. However, a simple list of what is setting on the various test benches is insufficient for the task at hand. A methodical "from the ground up" approach is necessary to achieve the desired results, and the following points are suggested as one possible methodology.

1. Determine each and every base item that will need to be established as Traceable to satisfy your operating requirements. Obtain the service/calibration manual or other appropriate documents for each one of these.

2. Review each item's calibration manual for the following points:

   - Measurement Standards technical requirements and recommended types.
   - Operating and calibration environmental requirements.
   - Written conformance to specifications (MIL-STD).

3. Referring to each Measurement Standard requirement and/or type listed in the previous step, review each actual Measurement Standard on hand for the following points:

   - Adequate accuracy and stability for the intended use.
   - Appropriate substitution/deviation criteria if required.

4. Repeat steps 2 and 3 (previous page) for each of the succeeding tiers of Measurement Standards until the required items are:

   - No longer within your facility, or
   - Must be sent to an outside facility to receive the required level of service.

One additional benefit that will be available upon completion of such a survey may not be immediately obvious, but does deserve mentioning. If you are now faced with the need to acquire equipment to address traceability requirements, to cover other present or planned testing, or for any other need, you will now have a wealth of information available to assist in making the best possible acquisition decision based upon all of your present technical capabilities.

TRACEABILITY AND SYSTEM DOCUMENTATION

A good general assumption for any system of quality control is that there are established procedures, often written, for accomplishing the goals by using adequate methods in an identical manner for each occurrence or test. A traceable calibration system goes a bit beyond this general assumption in definition, and substantially beyond it in scope. The development of written documents covering the numerous required details therefore becomes the second principle task.

The first point that will be encountered is that the written calibration system description is now mandatory. This description will will start with very generic information covering such items as where calibration records are kept, and will progress into detailed descriptions of what those records contain. The intent of this exhaustive documentation requirement will be for the facility to be able to prove that a) the various system components have been properly selected, operated and maintained, b) that the results have been properly recorded, stored and appropriately disseminated, and c) that any mistakes, compromises or other anomalies encountered within the process are immediately fed back to the facility itself, and to all affected customers for appropriate corrective action.

A quick review of several of the sections of the MIL-STD shows that many of the requirements appear to overlap. Therefore, the following discussions will concentrate only upon Section 5, the Detailed Requirements. These requirements will be the focus of the vast majority of your day-to-day efforts to provide and maintain traceability.

A review of Section 4, General Requirements, will provide an overview of what it is that your documentation needs to address in a global sense.

- Calibration System Description (5.1) -

Section 5.1 mandates a document that will serve as a general overview of your facility, the equipment, the processes and methods of operating, and the provisions for variation. It will also serve as a master index of other supporting documents, and where they are located.

Within this description, it will be appropriate to have sentences, paragraphs or chapters, as required, to discuss the specifics of each of the remaining detailed requirements (5.2 thru 5.13). Some key points about how each of these other sections apply to 5.2 are as follows:

-5.2- Develop a general statement attesting to the adequacy of the measurement standards used in the facility including, but not limited to, accuracies, stabilities, ranges, resolutions, and collective uncertainties.

Indicate where instrument specific accuracy requirements can be located, and also where Measurement Standard specifications can be located.

Indicate where deviations are required, what they are, and how they are handled. These deviation notes, if extensive or unique, may be located within the documentation for a specific application. If so, indicate the location. *(Calibration ... continued on following page)*

- Calibration System Description (5.1) – *(...Continued from previous page)*

-5.3- Provide a general statement of the applicable environmental conditions that will be met within the facility. Also indicate how and where environmental conditions are monitored and recorded, and what compensating factors may have been implemented.

-5.4- Indicate what calibration intervals are used, how they are maintained, and what provisions there are for making interval changes.

Describe the workings of your recall system, including such items as what criteria is used, who may be notified, what time periods are appropriate, and how extensions are addressed.

-5.5- Describe what calibration procedures are used for each instrument, where they are kept, and what processes might be used for procedure updates or corrections.

-5.6- Indicate your out-of-tolerance response processes, including all who must be notified, and list types of data that will be provided.

-5.7- Develop procedures that will allow you to periodically verify that your facility is in compliance.This may include, but is not limited to, procedures that provide alternate instrument performance verifications, procedures that specify how and when your records are audited, and procedures that specify how changes are accommodated.

-5.8- Provide a list of where all of your items are calibrated (your facility, or any outside facility). Then, develop a location list of where all evidence of traceable calibration is kept, and what types of data, certificates, reports, etc., are required for each instrument type. Also develop a list of calibration schedules for your equipment.

-5.9- Develop a list of where calibration records are kept, how they are maintained, what their format will be, and any supporting data that may be required.

-5.10- Describe your calibration labeling requirements. Include information about what types of labels are used, what the label contents are, when and how they are used, where they are attached, and your response to damaged or broken seals. Actual examples of your various labels are desirable.

-5.11- Describe your means of coordination with outside facilities in order to ensure conformance. Include provisions for auditing them.

-5.12- Provide appropriate statements for proper storage and handling of equipment.

-5.13- Provide allowances for revisions to the MIL-STD where they may apply.

- Adequacy of Measurement Standards (5.2) -

Section 5.2 specifies the accuracy requirements, supporting documentation, and procedures to be used when prescribed accuracies cannot be attained.

- Measurement standards shall be Traceable.
- Measurement standards shall have accuracy, stability, range and resolution required for the intended use.
- The collective uncertainty shall not exceed 25% of the acceptable tolerance of the characteristic being calibrated.
- Provisions for deviations from uncertainty requirements are allowed.
- Calibration adequacy shall not be degraded.
- Deviations shall be documented.

- Environmental Controls (5.3) -

Section 5.3 specifies that equipment shall be calibrated and utilized in a proper controlled environment appropriate for the tasks. Also required is the application of compensation factors where a departure from an acceptable environment is encountered. Although not specifically stated at this point, these compensation factors are usually recorded elsewhere in various instrument specific documents.

Common practice today is to place appropriate environmental monitoring devices within the facility, periodically (daily) record their readings, and make these readings readily available for individual instrument certificates, data sheets, reports, etc.

Environmental conditions to monitor are instrument and/or lab specific, but will usually include one or more of the following:

- Temperature
- Humidity
- Vibration
- Cleanliness
- Electronic interference
- Other applicable data

- Intervals of Calibration (5.4) -

Section 5.4 specifies how often equipment within the facility must be calibrated. The focus here is on the equipment that will be used to calibrate other people's equipment.

The requirements of regular and proper intervals are set to assure acceptable accuracies. Items to consider are:

- Intervals are purposely established and maintained.
- Intervals shall be shortened as required to assure accuracy.
- Accuracy is defined as "remaining in tolerance".
- Intervals may be lengthened if historical records can validate this change.
- Periodic intervals shall be supported by a mandatory recall system.
- Temporary extensions are allowed for under specific conditions.

- Calibration Procedures (5.5) -

Section 5.5 gives specifics about the contents of written calibration procedures to assure that the measurement standards chosen can be shown to be adequate, that the required results are documented, and that the calibration is accomplished correctly and in the same manner each time. The procedure that shall be used shall specify, at a minimum, the following points:

- The measurement standards and equipment to be used:
  - The manufacturer and model number or a generic description.
  - The required parameter(s).
  - Each required parameter's range.
  - Each required parameter's accuracy.
- The acceptable tolerance of each instrument characteristic being calibrated.
- The written procedure shall provide instructions adequate for calibration of each characteristic of concern.

- Out-of-Tolerance Conditions (5.6) -

Section 5.6 is focused upon the equipment that is being calibrated at the moment. In short, it mandates a mechanism that will notify the user that his item was significantly out-of-tolerance when received at the calibration facility. The intent is to allow the user to take any necessary actions on other equipment that this item may have been used with or on. Key points here are:

- Significantly out-of-tolerance is presently agreed to be greater than 50% of the affected characteristic's specified tolerance.
- The user shall be notified.
- Your facility's quality control element shall be notified.
- Associated supporting measurement data shall be supplied.

- Calibration Sources (5.8) -

Section 5.8 is deals primarily with the requirement to have written evidence of instrument specific conformance to MIL-STD for calibrations, with an added emphasis on those calibrations that are provided by other facilities. Also specified are the types of information that are to be included. Specific requirements include, but are not limited to, the following:

- All Measurement Standards shall be traceable.
- All Measurement Standards shall be supported by certificates, reports, or data sheets.
- Certificates, reports, or data sheets shall attest to the:
    - Description or identification of the item.
    - Calibration source.
    - Date of calibration.
    - Calibration assigned value.
    - Statement of uncertainty.
    - Environmental conditions under which the calibration was performed.
    - Fact that the measurement standards used in obtaining the results are traceable.

Some of these data items may not be required in order to use the Measurement Standard. This is allowed for within the MIL-STD.

- Records (5.9) -

Section 5.9 covers the requirements for records showing what work was done, when it was done, and how it was done. The focus is upon the instrument that was calibrated.

There is to be an individual set of records for each item of test equipment, and these records are to include, at a minimum, the following types of information:

- Schedules of past calibrations.
- A description of the procedures used.
- A description or identification of the item.
- Calibration interval.
- The date calibrated.
- The identification of the calibration source.
- Calibration results.
- Calibration actions taken.
- Certificate or report numbers.

It should be noted here that current procedures used by many auditors require that records be kept for at least one year plus one calibration interval.

- Calibration Status (5.10) -

Section 5.10 addresses labels that shall be attached to each item calibrated. It covers the requirements for how and when to use labels, and their minimum contents and formats. The focus of this section is to provide a visible means of identifying whether or not an instrument is within prescribed time schedules, and what its adequacy limits might be, without having to research records that may not be readily available.

Some of the key points associated with labeling requirements are:

- Indicate the specific date calibrated.
- Indicate the specific due date.
- Indicate all limitations of use if the instrument is not at full capability.
- Instructions are necessary where specific label attachment criteria are appropriate, and are also necessary to address damaged or broken labels.
- Several types of labels are used to indicate "calibration status":
    - Traceable
    - Calibrated
    - No cal necessary
    - Exempt
    - Others

- Control of Subcontractor Calibration (5.11) -

Section 5.11, in short, makes it your responsibility to ensure that any calibrations of your equipment performed by outside facilities complies with the requirements of the MIL-STD.

- Storage and Handling (5.12) -

Section 5.12 specifies that equipment shall be stored and handled properly.

- Amendments and Revisions (5.13) -

Section 5.13 addresses the need to account for any amendments by letting the facility or person that you are working for know, in writing, of the changes.

PRODUCT SERVICE TRAINING CLASSES

Tektronix Service Training provides new technicians the skills and techniques required for effective maintenance of Tektronix products. In addition, it brings experienced technicians up-to-date on maintenance of new products.

Classes	Locations	Dates
DAS9200 Digital Analysis System	Beaverton, OR	July 10 – 21, 1989
LV500 Logic Verifier System	Beaverton, OR	July 20 – 28, 1989
1240/1241 Logic Analyzers	Beaverton, OR	Sept. 25 – Oct. 6, 1989
465B/475A Portable Oscilloscopes	Irvine, CA	August 7 – 11, 1989
2215/2235/2236 Portable Oscilloscopes	Irvine, CA	August 14 – 18, 1989
2230/2232 Digital Storage Oscilloscopes	Beaverton, OR	Aug. 21 – Sept. 1, 1989
2430/2432/2440 Digital Storage Oscilloscopes	Beaverton, OR	June 12 – 23, 1989
2245/2246/2247 Portable Oscilloscopes	Irvine, CA	August 21 – 25, 1989
2465/2467 Microprocessor Based Oscilloscopes	Atlanta, GA	July 10 – 21, 1989
7612D Programmable Waveform Digitizers	Beaverton, OR	July 10 – 21, 1989
7904/7633 Lab-Storage Oscilloscope	Atlanta, GA	Sept. 11 – 22, 1989
7912HB Programmable Digitizer	Beaverton, OR	Sept. 11 – 22, 1989
TM5000 Digital Counter/Multimeter	Beaverton, OR	Sept. 18 – 29, 1989
1180X Digital Sampling Oscilloscope	Beaverton, OR	July 24 – 28, 1989
49XA/P-275X Portable Spectrum Analyzers	Beaverton, OR	June 12 – 30, 1989
3052 Digital Spectrum Analyzer	Beaverton, OR	Aug. 14 – Sept. 1, 1989

In addition to classroom instruction, Tektronix Service Training has a variety of training packages and video tapes available for self-study. Classes are also available for maintenance of other Tektronix products. Call for further information.

Registration Information

Class sizes are limited. We recommend that you enroll early.

For more information or to register for these classes, call Tektronix Service Training, 1-800-835-9433, EXT. WR1407. In Oregon, call (503) 629-1407, or contact your local Tektronix Field Office.

We retain the option to cancel or reschedule a class.

Bob Derman, Service Training, (503) 629-1177/MS94-925

This application note describes how to obtain optimum performance using the P6461's reference, reference sense and ground sense inputs when making hi-speed measurements with the 92A16. Theory of operation is included so that the user can effectively utilize the 92A16's 200 MHz acquisition speed in combination with the unique P6461 probing system.

***Note** — In the 92A16/A16E User's Manual (070-5948-01), Appendix C, pages 10-12, "Connecting Probes To The System Under Test", "P6461/E — Ground and Reference Sense", is NOT accurate. Please replace the information in the "Ground and Reference Sense" section with the information in this article.*

Theory of Operation

The P6461 has a differential input comparator, rather than a single input comparator, as in the P6460. A functional block diagram of the P6461 podlet and probe is shown in Figure 1.

As shown in Figure 1, the signal input to the podlet is compared to the encoded threshold voltage from the 92A16. This encoded voltage sets the signal input threshold on the comparator to the programmed threshold which is relative to the user's ground sense wire (black wire). This encoded threshold voltage is used by either the P6460 or P6461. *(Continued on the following page)*

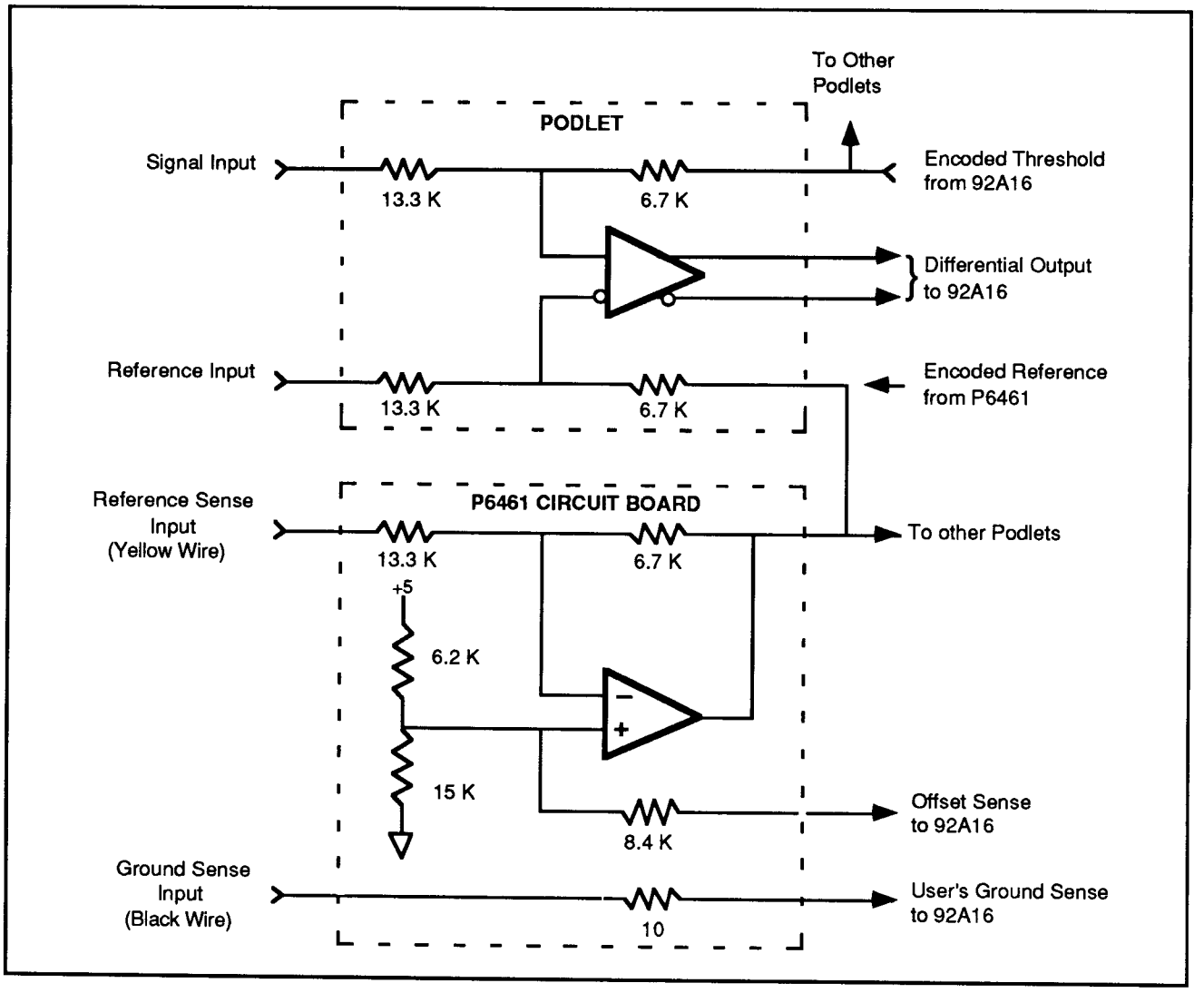

Figure 1 — Functional Block Diagram of P6461 Podlet and Probe

The reference signal input to the podlet is compared to an encoded reference voltage from the P6461 probe. The encoded reference voltage is generated inside the P6461 main pod, and is a function of the reference sense input (yellow wire). It receives no control inputs from the 92A16, and operates independently of the encoded threshold from the 92A16.

The reference inputs to the individual podlets perform two functions:

1. It provides a short AC ground for the input signal, allowing operation above 200 MHz. If the reference input is not used, the bandpass is reduced to less than 100 MHz;

2. It allows compensation for the DC shift and AC noise which is different for every podlet receiver. In the hi-speed mode, the reference input and the reference sense input (yellow lead) must both connect to the same voltage level (V_{cc} or V_{bb} or Ground).

Example:

In ECL circuits, the input threshold is V_{cc} - 1.3 V. It is possible to have 100-200 mV of DC variation in V_{cc} across a circuit board. To compensate for this voltage drop when making a measurement with the P6461:

- connect the P6461's reference sense to V_{cc} (where there is no voltage drop);

- measure V_{cc} reference voltage, and program threshold = V_{cc} - 1.3 V;

- connect podlet's signal input to desired signal line at the receiver IC;

- connect reference sense input to V_{cc} of that IC. Any difference between reference sense and reference input causes a corresponding shift in the podlet threshold.

All ten podlets have their own reference input, and each podlet corrects for reference input voltage variations independently. The reference input also corrects for AC noise. For example, if there is 100 mV of switching power supply noise on the reference input, the podlet threshold will compensate for this.

Operation Without Using Reference Inputs

In slow speed circuits (below 100 MHz) with large input swings (TTL), the reference inputs can remain disconnected (floating). There will be additional timing skew of about 1 ns if the reference is NOT used. In addition, the podlets will not correct for reference variation. For some applications, these errors are trivial and the major benefit is quicker probe connection, i.e., 11 less wires to connect per probe.

When the reference is not used, however, the reference sense wire must be left floating. When the reference sense is floated, the encoded reference voltage is forced to the correct level for the podlet comparator input. The threshold will work correctly as long as the podlet reference inputs will work correctly as long as the podlet reference inputs are floating. Any voltage applied to the podlet reference input will change the comparator voltage, resulting in gross threshold error, on the order of volts, OR if the reference sense wire is connected, but the podlet reference input is floated, gross threshold error on the order of volts will also result.

***Note** — if one reference input is used, the reference sense (yellow wire) must be connected, and all inputs that are connected must use reference inputs. If the reference sense input is used, all podlets must have reference inputs connected.*

Unused podlets can generate undesirable timing inaccuracies if conditions happen to be exactly wrong. If the programmed threshold is the same as the reference sense, the podlet comparator would be set at V_{bb}. It would send amplified "noise" to the 92A16, which introduces cross talk. To prevent this, tie one podlet input to a voltage other than the threshold voltage.

(Continued on the following page)

Obtaining Optimum Performance Using the Reference Inputs

Using the reference inputs allows the podlet threshold to react as the receiver IC does. This assures that the logic analyzer samples what the receiver IC detects.

Misuse of the reference inputs can cause the logic analyzer to disagree with the receiver IC. If the reference input is connected to a different IC than the signal input is received at, the podlet will correct for the wrong receiver IC. Assuming worst case, this can result in additional error, possibly even worse than if the reference input were unconnected.

The reference voltage used should be the same voltage which the receiver IC's reference their thresholds to. In ECL this is V_{cc} whereas in TTL this is V_{ee}. If V_{ee} is erroneously used for the reference in an ECL circuit, the podlet will correct for V_{ee} variations. The ECL input threshold is fairly independent of V_{ee}. In fact, V_{ee} usually drifts positive (from IR drop), while V_{cc} drifts negative (from IR drop). In this case the podlet reference input will correct in the opposite direction relative to V_{bb}. If the wrong reference voltage is chosen, error is introduced into the measurement rather than corrected for.

Where to Connect the Reference Sense and Ground Sense Inputs

The reference sent (yellow wire) and ground sense (black wire) inputs can be connected to any point on the board under test, although it is better to make connections near the power supply input. If the reference point is ground, both the reference sense and the ground sense should be connected to the same point.

How to Select the Programmed Threshold

A good example is +5 V referenced ECL. Using a voltmeter, measure the voltage between the ground sense (black wire) connected to GND and the reference sense (yellow wire) connected to V_{cc}. It is CRITICAL to measure at the sense input points. Measuring at any other point will introduce a threshold error equal to the difference between the sense input points and where the voltmeter was connected. This error could negate the advantages of using the reference inputs.

For example, assume the reading is 5.10 V. Calculate V_{cc} - 1.30 V (ECL V_{bb}) = 3.8 V. The correct value, then, to program the threshold would be a 3.8 V. The actual threshold at the podlet will be:

$$3.8\ V \pm (V_{ref}\ Sense - V_{ref}\ In)$$

In summary, select the correct reference point: V_{cc} for ECL and V_{ee} for TTL. Connect the signal inputs at the IC receivers and connect the reference input on the podlet to the same IC that the signal input connects to.

Using the P6461 in Differential Input Mode

Differential input mode is not a specified operating mode of the P6461 and P6461E. It is functional, however, and should perform as well or better than normal single-ended mode.

To use differential inputs, the reference sense input (yellow wire) must connect to V_{bb}. The podlet signal input connects to the positive differential input and the reference connects to the negative differential input and the reference connects to the negative differential input. The podlet switching threshold is determined at the point where the differential inputs cross and the difference between the reference sense input and the midswing of the differential inputs.

In theory it is possible to operate with differential inputs on several podlets and with signal and reference inputs on the other podlets, all on the same P6461 probe. Consequently, differential and single-ended signals can be simultaneously acquired on the same P6461 probe. When using mixed differential and single-ended inputs together on the same P6461 probe, the reference input on the single-ended inputs must be connected to V_{bb}.