TEKTRONIX®

M1
MULTIFUNCTION MODULE

INTERIM SERVICE

INSTRUCTION MANUAL

Tektronix, Inc.
P.O. Box 500
Beaverton, Oregon 97005

Serial Number _____

WARRANTY

All TEKTRONIX instruments are warranted against defective materials and workmanship for one year. Any questions with respect to the warranty should be taken up with your TEKTRONIX Field Engineer or representative.

All requests for repair and replacement parts should be directed to the TEKTRONIX Field Office or representative in your area. This will assure you the fastest possible service. Please include the instrument Type Number or Part Number and Serial Number with all requests for parts or service.

Specifications and price change privileges reserved.

U.S.A. and Foreign TEKTRONIX products covered by U.S. and foreign patents and/or patents pending.

PERFORMANCE

Calibration interval

To insure instrument accuracy, check the performance of the M1 every 1000 hours of operation, or every six months if used infrequently.

If the instrument does not perform within the tolerances given in the Performance Check, recalibration may be necessary.

Tektronix Field Services

Tektronix, Inc. provides complete instrument repair and recalibration at local Field Service Centers and the Factory Service Center. Contact your local Tektronix Field Office or representative for further information.

Test Equipment Alternatives

The following test equipment and accessories, or equivalent, is required for a complete performance check of the M1 and 7D12 combination. Specifications given for the test equipment are the minimum necessary for an accurate performance check. Therefore, the specifications of any test equipment used must meet or exceed the listed specifications. All test equipment is assumed to be correctly calibrated and operating within the listed specifications. Detailed operating instructions for the test equipment are not given in this procedure. Refer to the instruction manual for the test equipment if more information is needed.

When other equipment is substituted, control settings or performance setup may need to be altered to meet the requirements of the substituted equipment. If the exact item of test equipment, given as an example in the Test Equipment List, is not available, first check the specifications column carefully to see if any other equipment is available that might suffice. Then check the Usage column to see what this item of test equipment is used for. If used for a check that is of little or no importance to your measurement requirements, the item and corresponding step(s) can be deleted.

TABLE 1

Test Equipment

DESCRIPTION	MINIMUM SPECIFICATIONS	USAGE	EXAMPLES OF APPLICABLE TEST EQUIPMENT
1. Indicator Oscilloscope	Tektronix 7000-series Oscilloscope equipped with a readout system.	Used throughout procedure to provide a read-out display.	a. Tektronix 7704A Oscilloscope b. Tektronix 7603 Oscilloscope
2. 7D12 A/D Converter		Used throughout procedure as interface between M1 and indicator oscilloscope.	a. Tektronix 7D12 A/D Converter.
3. Resistance Standard	Range, 200 ohms to 20 megohms; accuracy, within 0.05%.	Resistance measurement accuracy check.	a. Electro Scientific Industries Model DB52 Decade Resistor.
4. DC Voltage Standard	Range, 0 volts to 1000 volts; accuracy, within 0.005%.	Voltage measurement accuracy check.	a. Fluke Model 343A DC Voltage Calibrator.
5. Temperature Bath and Bath Cooler	Range, 0°C to +125°C.	Temperature measurement accuracy check.	a. Neslab Instruments Model TE9/100 Stirred Bath and Model PBC-4 Bath Cooler.
6. Oil Testing Thermometer	Range, 0°C and +125°C; accuracy, within 1/5°C.	Temperature measurement accuracy check.	a. ASTM 67C; Nurnberg Catalog Number 5790

Test Equipment

DESCRIPTION	MINIMUM SPECIFICATIONS	USAGE	EXAMPLES OF APPLICABLE TEST EQUIPMENT
7. Temperature Probe Equalizing Block		Temperature measurement accuracy check.	a. See Figs. 1 and 2.
8. Digital Voltmeter	Range, 20 volts; accuracy, within 0.1%.	TEMP OUT accuracy check.	a. Tektronix 7D13 Digital Multimeter Plug-in.
9. P6058 Voltage/Temperature Probe (supplied accessory)		DC Voltage and Temperature measurement accuracy check with probe.	a. Tektronix Part Number 010-0260-00.
10. Patch Cord (one required)	Connectors, Banana Plug-Jack to Banana Plug-Jack; length, 18 inches.	Voltage measurement check.	a. Tektronix Part Number 012-0031-00 (red) b. Tektronix Part Number 012-0039-00 (black)
11. Test Lead Set (supplied accessory)		Resistance and Voltage measurement checks.	a. Tektronix Part Number 012-0427-00.
12. 10 Megohm Resistor	10 megohm, within 1%; Good short term stability.	20 MΩ accuracy check.	a. Tektronix Part Number 325-0072-00.

Index to Performance Check Procedure

PERFORMANCE CHECK

Introduction

The following procedure checks the performance of the M1 without making internal adjustments. All tolerances given in this procedure are based on the Performance Requirements Specification given in the 7D12, M1, M2, M3 Operator's Manual.

Preliminary Procedure for Performance Check

NOTE

The performance of this instrument can be checked at any temperature within the +15°C to +40°C range unless stated otherwise.

1. Insert the M1 Module into the 7D12 A/D Converter and install them in any available plug-in compartment of a 7000-series indicator oscilloscope.

2. Connect the indicator oscilloscope to a power source which meets the frequency and voltage requirements of the oscilloscope power supply.

3. Turn the indicator oscilloscope power on. Allow at least twenty minutes warmup time before checking the M1 to the given accuracy.

4. Set the controls as follows:

7D12

TRIGGERING	AUTO
GATE	OUT-OFF

M1

M1

MODE/RANGE	DC VOLTS/2V (orange front-panel tint)

Any controls not mentioned can be set as desired.

5. Set the indicator oscilloscope readout control to obtain a usable readout display. Adjust the focus and astigmatism as necessary for well-defined characters in the display.

DC VOLTS MEASUREMENT ACCURACY CHECK

Equipment Required

1. Indicator Oscilloscope
2. 7D12 A/D Converter
3. DC Voltage Standard
4. Banana-plug patch cord (one required)
5. P6058 Probe (supplied accessory)
6. Test Lead Set (supplied accessory)

Control Settings

Set the M1 MODE/RANGE switch to DC VOLTS/2 V. (The orange-tinted area of the front panel indicates the ranges used for measurements via the INPUT connectors.)

NOTE

The tolerances given in this check are valid at an ambient temperature range of +20°C to +30°C. However, if the check is performed at some other temperature refer to the M1 Specification section in the Operator's Manual for applicable tolerances for that temperature.

1. Check DC VOLTS Measurement Accuracy

a. Connect a banana-plug patch cord between the M1 COM INPUT connector and the ground post connector on the indicator oscilloscope.

b. Set the output of the DC voltage standard to zero.

c. Using the Test lead set, connect the M1 HIGH and COM INPUT connectors to the plus (+) and minus (-) output terminals respectively on the DC voltage standard.

d. CHECK - Set the M1 MODE/RANGE switch and the output of the DC voltage standard to the settings given in Table 2. The readout display should show a positive voltage (a "+" symbol preceding the voltage reading) within the limits given for each MODE/RANGE switch setting and DC voltage standard output listed in Table 2.

NOTE

If the input voltage equals or exceeds the MODE/RANGE switch setting, the polarity symbol will be replaced by a > symbol.

TABLE 2

DC VOLTS Measurement Accuracy

M1 MODE/RANGE Switch	DC VOLTAGE Standard Output	Readout Limits	
		Min	Max
DC VOLTS/2 V	2.00000 V	1.9993 V	2.0007 V
DC VOLTS/20 V	2.00000 V	1.998 V	2.002 V
DC VOLTS/20 V	20.0000 V	19.993 V	20.007 V
DC VOLTS/200 V	20.0000 V	19.98 V	20.02 V
DC VOLTS/200 V	200.000 V	199.93 V	200.07 V
DC VOLTS/1 kV	200.000 V	.1998 kV	.2002 kV
DC VOLTS/1 kV	1000.00 V	.9996 kV	1.0004 kV

e. Set the output of the voltage standard to zero.

f. Connect the M1 HIGH and COM INPUT connectors to the minus (-) and plus (+) output terminals respectively on the DC voltage standard.

g. CHECK - Set the M1 MODE/RANGE switch and the output of the DC voltage standard to the settings given in Table 2. The readout display should show a negative voltage (a "-" symbol preceding the voltage reading) within the limits given for each MODE/RANGE switch setting and DC voltage standard output listed in Table 2.

h. Set the M1 MODE/RANGE switch to DC VOLTS/2 V and the output of the DC voltage standard to 20 volts.

i. CHECK - The readout polarity symbol should be replaced by a > symbol to indicate an over-range measurement.

j. Set the output of the DC voltage standard to zero and remove the Test lead set connections between the M1 and the DC voltage standard.

2. Check PROBE DC VOLTS Measurement accuracy.

a. Connect the P6058 Voltage/Temperature probe to the M1 PROBE connector.

CAUTION

When connecting the Voltage/Temperature Probe to the PROBE connector, the two connectors must be correctly aligned. Damage to the terminals can result from forcing the connector and jack together. Refer to the probe instruction manual.

b. Set the M1 MODE/RANGE switch to DC VOLTS/2 V. (The DC VOLTS ranges in the dark-gray area of the front panel are used for voltage measurements with the probe.)

c. Set the output of the DC voltage standard to zero.

d. Connect the probe tip and common strap to the plus (+) and minus (-) output terminals respectively on the DC voltage standard.

e. CHECK - The readout display should show a positive voltage (a "+" symbol preceding the voltage reading) within the limits given for each MODE/RANGE switch setting and DC voltage standard output listed in Table 2.

f. Set the output of the DC voltage standard to zero and disconnect the probe tip and common strap.

g. Disconnect the P6058 probe from the M1 PROBE connector.

RESISTANCE MEASUREMENT ACCURACY CHECK

Equipment Required

1. Indicator Oscilloscope
2. 7D12 A/D Converter
3. Resistance Standard
4. Test Lead Set (supplied accessory)
5. 10 megohm Resistor

Control Settings

Set the M1 MODE/RANGE switch to RESISTANCE/200 Ω.

3. Check RESISTANCE Measurement Accuracy

a. Connect the M1 INPUT connectors to the resistance standard, using the test lead set.

b. CHECK - The readout display should show a value of resistance within the limits given for each MODE/RANGE switch setting and resistance standard value listed in Table 3.

c. Disconnect the test lead set connections between the M1 INPUT connectors and the resistance standard.

NOTE

If the value of resistance being measured equals or exceeds the MODE/RANGE switch setting, the readout display will be preceeded by a > symbol.

TABLE 3

RESISTANCE Measurement Accuracy

M1 MODE/RANGE Switch	RESISTANCE Standard Output	Readout Limits	
		Min	Max
RESISTANCE/200 Ω	200.00 Ω	199.80 Ω	200.20 Ω
RESISTANCE/2 kΩ	200.00 Ω	.1996 kΩ	.2004 kΩ
RESISTANCE/2 kΩ	2000.0 Ω	1.9980 kΩ	2.0020 kΩ
RESISTANCE/20 kΩ	2000.0 Ω	1.996 kΩ	2.004 kΩ
RESISTANCE/20 kΩ	20.000 kΩ	19.980 kΩ	20.020 kΩ
RESISTANCE/200 kΩ	20.000 kΩ	19.96 kΩ	20.04 kΩ
RESISTANCE/200 kΩ	200.00 kΩ	199.80 kΩ	200.20 kΩ
RESISTANCE/2 MΩ	200.00 kΩ	.1996 MΩ	.2004 MΩ
RESISTANCE/2 MΩ	2.0000 MΩ	1.9980 MΩ	2.0020 MΩ
RESISTANCE/20 MΩ	2.0000 MΩ	1.996 MΩ	2.004 MΩ
RESISTANCE/20 MΩ	*20.000 MΩ	19.980 MΩ	20.020 MΩ

*Note: If a 20 megohm standard is not available, use the alternative 20 megohm accuracy check below.

4. Alternate 20 Megohm Accuracy Check

a. Set the resistance standard to 10 megohms, and the M1 MODE/RANGE switch to 20 MΩ.

b. CHECK - The readout display should read 10 MΩ within .01 MΩ (9.990 MΩ to 10.010 MΩ). Note the exact value of the readout display.

c. Remove the test leads from the resistance standard, and connect them across the 10 megohm resistor. Note the exact value of the readout display.

d. Add the value of resistance displayed on the readout to the value of resistance obtained from the resistance standard.

e. Connect the resistance standard and resistor in series and measure the total resistance.

f. CHECK - The readout display should equal the sum obtained in part d, within .01 megohm.

TEMPERATURE MEASUREMENT CHECK

Equipment Required

1. Indicator Oscilloscope
2. 7D12 A/D Converter
3. P6058 Probe
4. Temperature bath and bath cooler
5. Oil testing thermometer
6. Temperature probe equalizing block
7. Digital voltmeter

Control Settings

Set the M1 MODE/RANGE control to TEMPERATURE.

5. Check TEMPERATURE Measurement Accuracy and TEMP OUT Accuracy

a. Connect the P6058 probe to the M1 PROBE connector.

CAUTION

When connecting the P6058 probe to the PROBE connector, the two connectors must be correctly aligned. Damage to the terminals can result from forcing the connector and jack together.

b. Install the P6058 probe and the oil-testing thermometer in the holes in the temperature-probe equalizing block. (Use the dielectric coolant given in Fig. 1.)

c. Suspend the temperature-probe equalizing block in the temperature bath, making sure that the top surface of the block is not submerged.

d. Set the temperature bath and bath cooler for 0°C.

e. CHECK - When the temperature bath has reached 0°C as indicated by the oil-testing thermometer, the M1 readout display should read 0°C, plus or minus 1°C (-1C to +1C).

f. Connect the digital voltmeter to the TEMP OUT pinjack connectors.

g. CHECK - The digital voltmeter should read 0 volt, plus or minus 10 mV.

h. Set the temperature bath for +125°C.

i. CHECK - When the temperature bath has reached +125°C as indicated by the oil-testing thermometer, the M1 readout display should show +125C, plus or minus 1°C (+124C to +126C).

j. CHECK - The digital voltmeter should read +1.25 volts, within 10 mV (+1.24 V to +1.26V).

k. Disconnect the digital voltmeter.

l. Set the temperature bath to 25°C (room temperature).

m. After allowing the temperature bath to cool, remove the temperature-probe equalizing block, P6058 probe, and the oil-testing thermometer from the bath.

n. Disconnect the P6058 probe from the M1.

This completes the Performance Check of the M1.

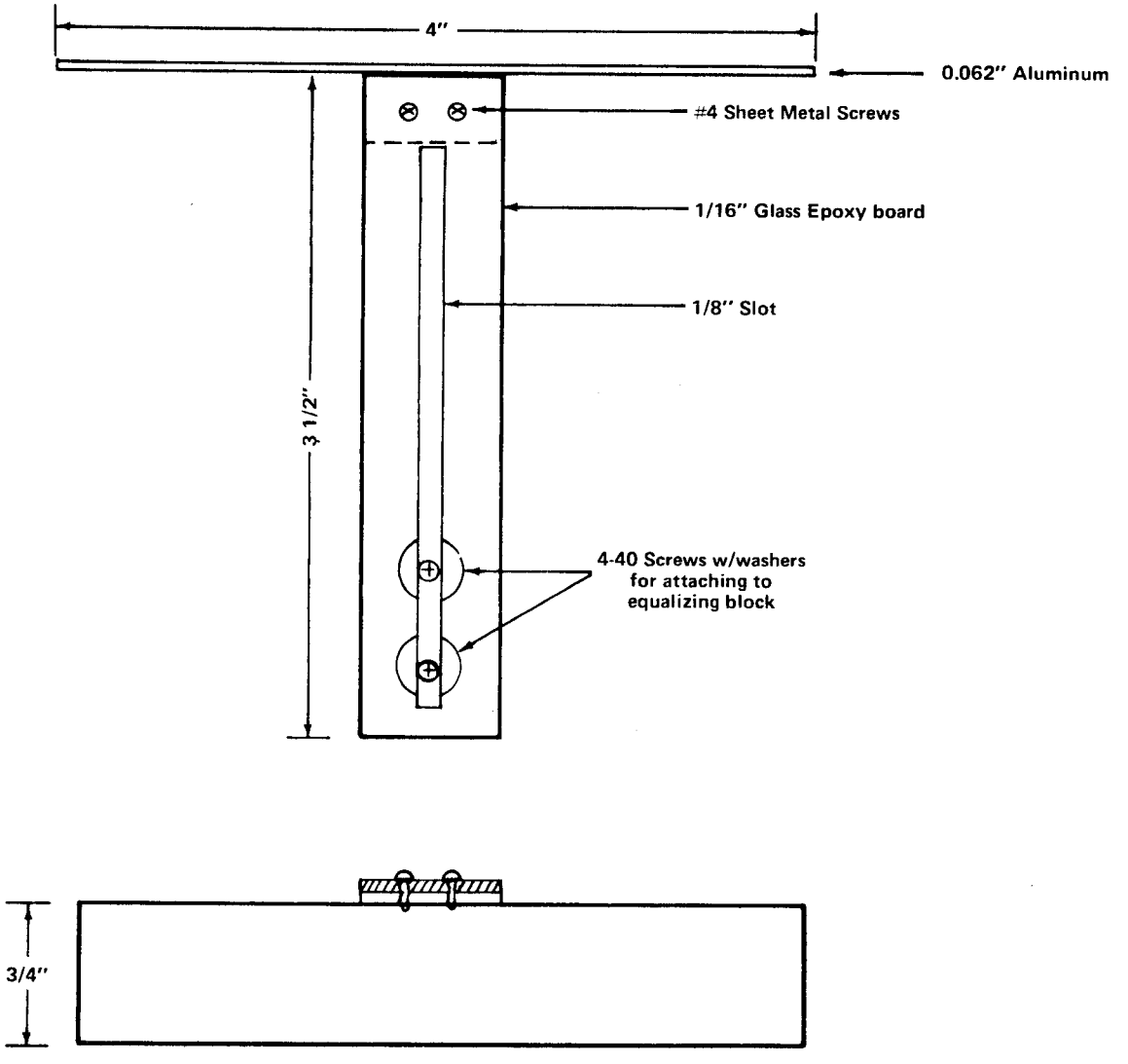

Fig. 1. Temperature Probe Equalizing Block

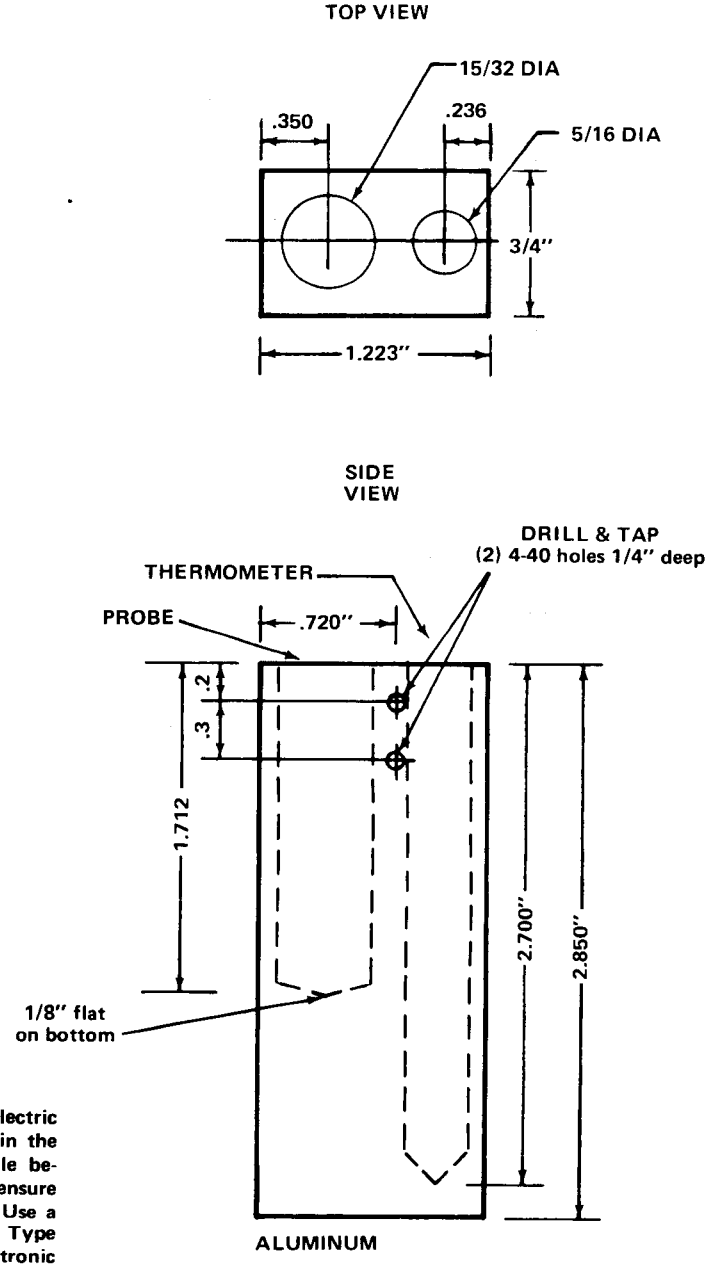

A small quantity of dielectric coolant should be placed in the equalizing block probe hole before installing the probe to ensure good thermal conduction. Use a dielectric coolant such as Type FC40 Fluorinert Brand Electronic Liquid.

Fig. 2. Suspension bracket for temperature probe equalizing block.

ELECTRICAL REPLACEABLE PARTS LIST

PARTS ORDERING INFORMATION

Replacement parts are available from or through your local Tektronix, Inc. Field Office or representative.

Changes to Tektronix instruments are sometimes made to accommodate improved components as they become available, and to give you the benefit of the latest circuit improvements developed in our engineering department. It is therefore important, when ordering parts, to include the following information in your order: Part number, instrument type or number, serial number, and modification number if applicable.

If a part you have ordered has been replaced with a new or improved part, your local Tektronix, Inc. Field Office or representative will contact you concerning any change in part number.

Change information, if any, is located at the rear of this manual.

SPECIAL NOTES AND SYMBOLS

X000	Part first added at this serial number
00X	Part removed after this serial number

ITEM NAME

In the Parts List, an Item Name is separated from the description by a colon (:). Because of space limitations, an Item Name may sometimes appear as incomplete. For further Item Name identification, the U.S. Federal Cataloging Handbook H6-1 can be utilized where possible.

ABBREVIATIONS

ACTR	ACTUATOR	PLSTC	PLASTIC
ASSY	ASSEMBLY	QTZ	QUARTZ
CAP	CAPACITOR	RECP	RECEPTACLE
CER	CERAMIC	RES	RESISTOR
CKT	CIRCUIT	RF	RADIO FREQUENCY
COMP	COMPOSITION	SEL	SELECTED
CONN	CONNECTOR	SEMICOND	SEMICONDUCTOR
ELCTLT	ELECTROLYTIC	SENS	SENSITIVE
ELEC	ELECTRICAL	SEP	SEPARATELY
FXD	FIXED	VAR	VARIABLE
INCAND	INCANDESCENT	WW	WIREWOUND
LED	LIGHT EMITTING DIODE	XFMR	TRANSFORMER
NONWIR	NON WIREWOUND	XTAL	CRYSTAL

CROSS INDEX

MFR. CODE NUMBER TO MANUFACTURER

MFR.CODE	MANUFACTURER	ADDRESS	CITY,STATE,ZIP
0000A	Lemo USA	2015 2nd St.	Berkley, CA 94710
01002	General Electric Co., Industrial and Power Capacitor Products Dept.	John St.	Hudson Falls, NY 12839
01121	Allen-Bradley Co.	1201 2nd St.	Milwaukee, WI 53212
04713	Motorola, Inc., Semiconductor Products Div.	5005 E. McDowell Rd.	Phoenix, AZ 85008
07263	Fairchild Semiconductor, A Div. of Fairchild Camera and Instrument Corp.	464 Ellis St.	Mountain View, CA 94040
07910	Teledyne Semiconductor	12515 Chadron Ave.	Hawthorne, CA 90250
15818	Teledyne Semiconductor	1300 Terra Bella Ave.	Mountain View, CA 74040
56289	Sprague Electric Co.		North Adams, MA 01247
71400	Bussman Mfg., Division of McGraw-Edison Co.	2536 W. University St.	St. Louis, MO 63107
72982	Erie Technological Products, Inc.	644 W. 12th St.	Erie, PA 16512
73138	Beckman Instruments, Inc., Helipot Div.	2500 Harbor Blvd.	Fullerton, CA 92634
75042	TRW Electronic Components, IRC Philadelphia Div.	401 N. Broad St.	Philadelphia, PA 19108
80009	Tektronix, Inc.	P. O. Box 500	Beaverton, OR 97005
81483	International Rectifier Corp.	9220 Sunset Blvd.	Los Angeles, CA 90069
91637	Dale Electronics, Inc.	P. O. Box 609	Columbus, NB 68601

ABBREVIATIONS

ACTR	actuator
ASSY	assembly
CAP	capacitor
CER	ceramic
CKT	circuit
COMP	composition
CONN	connector
ELCTLT	electrolytic
ELEC	electrical
FXD	fixed
NONWIR	non wirewound
PLSTC	plastic
RECP	receptacle
RES	resistor
SEMICOND	semiconductor
VAR	variable
WW	wirewound

Ckt No.	Tektronix Part No.	Serial/Model No. Eff	Dscont	Name & Description	Mfr Code	Mfr Part Number
A1	670-2444-00			CKT BOARD ASSY:--TEMP OHMS	80009	670-2444-00
A2	670-2698-00			CKT BOARD ASSY:--MAIN	80009	670-2698-00
C1	283-0114-00			CAP.,FXD,CER DI:0.0015UF,5%,200V	72982	805-509Y5D152J
C2	283-0114-00			CAP.,FXD,CER DI:0.0015UF,5%,200V	72982	805-509Y5D152J
C9	283-0176-00			CAP.,FXD,CER DI:0.0022UF,20%,50V	72982	8121-M050W5R222M
C14	285-0889-00			CAP.,FXD,PLSTC:0.0027UF,5%,100V	01002	64F10AC272
C20	283-0204-00			CAP.,FXD,CER DI:0.01UF,20%,50V	72982	8121-N058651103M
C27	283-0111-00			CAP.,FXD,CER DI:0.1UF,20%,50V	72982	8131-050651104M
C29	283-0111-00			CAP.,FXD,CER DI:0.1UF,20%,50V	72982	8131-050651104M
C38	283-0000-00			CAP.,FXD,CER DI:0.001UF,+100-0%,500V	56289	40C626
C40	290-0525-00			CAP.,FXD,ELCTLT:4.7UF,20%,50V	56289	196D475X0050KA1
C42	283-0000-00			CAP.,FXD,CER DI:0.001UF,+100-0%,500V	56289	40C626
C54	283-0077-00			CAP.,FXD,CER DI:330PF,5%,500V	56289	40C94A3
C56	283-0000-00			CAP.,FXD,CER DI:0.001UF,+100-0%,500V	56289	40C626
C57	283-0111-00			CAP.,FXD,CER DI:0.1UF,20%,50V	72982	8131-050651104M
C61	290-0167-00			CAP.,FXD,ELCTLT:10UF,15V	56289	150D106X0015B2
C62	283-0000-00			CAP.,FXD,CER DI:0.001UF,+100-0%,500V	56289	40C626
C64	283-0110-00			CAP.,FXD,CER DI:0.005UF,150V	72982	855-547Z5U502Z
C71	290-0525-00			CAP.,FXD,ELCTLT:4.7UF,20%,50V	56289	196D475X0050KA1
C76	285-0919-00			CAP.,FXD,PLSTC:0.22UF,10%,100V	56289	LP66A1B224K002
C77	285-0683-00			CAP.,FXD,PLSTC:0.022UF,5%,100V	01002	64F15AC223
CR6	152-0321-00			SEMICOND DEVICE:SILICON,20V,20PA	07263	FSA1480
CR17	152-0141-02			SEMICOND DEVICE:SILICON,30V,50NA	07910	CD8220
CR37	152-0141-02			SEMICOND DEVICE:SILICON,30V,50NA	07910	CD8220
CR39	152-0141-02			SEMICOND DEVICE:SILICON,30V,50NA	07910	CD8220
CR44	152-0141-02			SEMICOND DEVICE:SILICON,30V,50NA	07910	CD8220
CR45	152-0141-02			SEMICOND DEVICE:SILICON,30V,50NA	07910	CD8220
F5	159-0024-00			FUSE,CARTRIDGE:0.06A,3AG,FAST-BLO	71400	AGC1-16
J1	131-1011-00			CONN,RECP,ELEC:4 CONTACTS,FEMALE	0000A	RA-1304TPX
J3	136-0497-00			JACK,TIP:RED	80009	136-0497-00
J33	136-0498-00			JACK,TIP:BLACK	80009	136-0498-00
Q7	151-1022-00			TRANSISTOR:SILICON,JFE,SEL FROM 2N4392	80009	151-1022-00
Q16	151-0192-00			TRANSISTOR:SILICON,SEL FROM MPS6521	80009	151-0192-00
Q18A,B	151-1044-00			TRANSISTOR:SILICON,JFE,DUAL	15818	2N3955
Q36	151-0188-00			TRANSISTOR:SILICON,PNP	04713	2N3906
Q43	151-0188-00			TRANSISTOR:SILICON,PNP	04713	2N3906
Q49	151-1022-00			TRANSISTOR:SILICON,JFE,SEL FROM 2N4392	80009	151-1022-00
Q58	151-1022-00			TRANSISTOR:SILICON,JFE,SEL FROM 2N4392	80009	151-1022-00
Q60	151-1022-00			TRANSISTOR:SILICON,JFE,SEL FROM 2N4392	80009	151-1022-00
R5	315-0510-00			RES.,FXD,COMP:51 OHM,5%,0.25W	01121	CB5105
R6	315-0202-00			RES.,FXD,COMP:2K OHM,5%,0.25W	01121	CB2025
R11	321-0699-00			RES.,FXD,FILM:23.2K OHM,0.25%,0.125W	91637	MFF1816CA23201C
R13	321-0699-00			RES.,FXD,FILM:23.2K OHM,0.25%,0.125W	91637	MFF1816CA23201C
R16	321-0306-00			RES.,FXD,FILM:15K OHM,1%,0.125W	75042	CEAT0-1502F
R17	315-0682-00			RES.,FXD,COMP:6.8K OHM,5%,0.25W	01121	CB6825
R21	321-0235-00			RES.,FXD,FILM:2.74K OHM,1%,0.125W	75042	CEAT0-2741F
R22	321-0643-00			RES.,FXD,FILM:22.1K OHM,0.25%,0.125W	91637	MFF1816C22101C
R24	321-0926-07			RES.,FXD,FILM:4K OHM,0.1%,0.125W	75042	CEAT9-4001B
R25	311-1489-00			RES.,VAR,NONWIR:500 OHM,10%,0.75W	73138	89P-501K-SM
R31	307-0352-00			RES.,NETWORK:FILM	01121	FN236
R32	308-0724-00			RES.,FXD,WW:100 OHM,0.01%,0.2W	91637	MWA8-H100R0L
R36	321-0250-00			RES.,FXD,FILM:3.92K OHM,1%,0.125W	75042	CEAT0-3921F
R38	321-0439-00			RES.,FXD,FILM:365K OHM,1%,0.125W	91637	MFF1816G36502F
R39	315-0104-00			RES.,FXD,COMP:100K OHM,5%,0.25W	01121	CB1045
R40	321-0243-00			RES.,FXD,FILM:3.32K OHM,1%,0.125W	75042	CEAT0-3321F
R42	321-0439-00			RES.,FXD,FILM:365K OHM,1%,0.125W	91637	MFF1816G36502F
R43	321-0250-00			RES.,FXD,FILM:3.92K OHM,1%,0.125W	75042	CEAT0-3921F
R44	315-0104-00			RES.,FXD,COMP:100K OHM,5%,0.25W	01121	CB1045
R45	315-0103-00			RES.,FXD,COMP:10K OHM,5%,0.25W	01121	CB1035
R47	315-0104-00			RES.,FXD,COMP:100K OHM,5%,0.25W	01121	CB1045

Ckt No.	Tektronix Part No.	Serial/Model No. Eff	Dscont	Name & Description	Mfr Code	Mfr Part Number
R49	321-0365-00			RES.,FXD,FILM:61.9K OHM,1%,0.125W	75042	CEAT0-6192F
R50	322-0643-00			RES.,FXD,FILM:600K OHM,1%,0.25W	75042	CEBT0-6003F
R52	321-0116-00			RES.,FXD,FILM:158 OHM,1%,0.125W	75042	CEAT9-1580F
R54	321-0222-07			RES.,FXD,FILM:2K OHM,0.1%,0.125W	91637	MFF1816C20000B
R60	315-0104-00			RES.,FXD,COMP:100K OHM,5%,0.25W	01121	CB1045
R62	315-0683-00			RES.,FXD,COMP:68K OHM,5%,0.25W	01121	CB6835
R65	311-1236-00			RES.,VAR,NONWIR:250 OHM,10%,0.5W	73138	72X-22-0-251K
R66	321-0222-07			RES.,FXD,FILM:2K OHM,0.1%,0.125W	91637	MFF181620000B
R67	321-0423-09			RES.,FXD,FILM:249K OHM,1%,0.125W	75042	CEAT9-2493F
R69	321-0397-00			RES.,FXD,FILM:133K OHM,1%,0.125W	75042	CEAT9-1333F
R70	321-0446-09			RES.,FXD,FILM:432K OHM,1%,0.125W	75042	CEAT9-4323F
R71	321-0174-00			RES.,FXD,FILM:634 OHM,1%,0.125W	75042	CEAT0-6340F
R72	311-1488-00			RES.,VAR,NONWIR:100 OHM,10%,0.75W	73138	89P-101K-SM
R73	321-0190-00			RES.,FXD,FILM:931 OHM,1%,0.125W	75042	CEAT0-9310F
R75	305-0564-00			RES.,FXD,COMP:560K OHM,5%,2W	01121	HB5645
R78	321-0356-00			RES.,FXD,FILM:49.9K OHM,1%,0.125W	75042	CEAT0-4992F
R79	315-0753-00			RES.,FXD,COMP:75K OHM,5%,0.25W	01121	CB7535
R80	315-0154-00			RES.,FXD,COMP:150K OHM,5%,0.25W	01121	CB1545
R82	321-0327-00			RES.,FXD,FILM:24.9K OHM,1%,0.125W	75042	CEAT0-2492F
R84	321-0356-00			RES.,FXD,FILM:49.9K OHM,1%,0.125W	75042	CEAT0-4992F
R85	321-0327-00			RES.,FXD,FILM:24.9K OHM,1%,0.125W	75042	CEAT0-2492F
R86	321-0321-00			RES.,FXD,FILM:21.5K OHM,1%,0.125W	75042	CEAT0-2152F
R88	315-0753-00			RES.,FXD,COMP:75K OHM,5%,0.25W	01121	CB7535
R89	315-0154-00			RES.,FXD,COMP:150K OHM,5%,0.25W	01121	CB1545
R91	321-0327-00			RES.,FXD,FILM:24.9K OHM,1%,0.125W	75042	CEAT0-2492F
R92	321-0356-00			RES.,FXD,FILM:49.9K OHM,1%,0.125W	75042	CEAT0-4992F
R94	321-0321-00			RES.,FXD,FILM:21.5K OHM,5%,0.125W	75042	CEAT0-2152F
R95	321-0356-00			RES.,FXD,FILM:49.9K OHM,1%,0.125W	75042	CEAT0-4992F
R97	315-0102-00			RES.,FXD,COMP:1K OHM,5%,0.25W	01121	CB1025
R98	315-0102-00			RES.,FXD,COMP:1K OHM,5%,0.25W	01121	CB1025
S2	105-0446-00			ACTR ASSY,CAM S:MODE/RANGE	80009	105-0446-00
U9	156-0067-00			INTEGRATED CKT:OPERATIONAL AMPLIFIER	07263	UA741
U56	156-0067-00			INTEGRATED CKT:OPERATIONAL AMPLIFIER	07263	UA741
U63	156-0067-00			INTEGRATED CKT:OPERATIONAL AMPLIFIER	07263	UA741
VR6	152-0195-00			SEMICOND DEVICE:ZENER,5.1V,5%,0.4W	81483	69-6512
VR27	152-0317-00			SMEICOND DEVICE:ZENER,6.2V,5%,0.25W	81483	1N3497
VR29	152-0127-00			SEMICOND DEVICE:ZENER,7.5V,5%,0.4W	04713	1N755A
VR71	152-0317-00			SEMICOND DEVICE:ZENER,6.2V,5%,0.25W	81483	1N3497

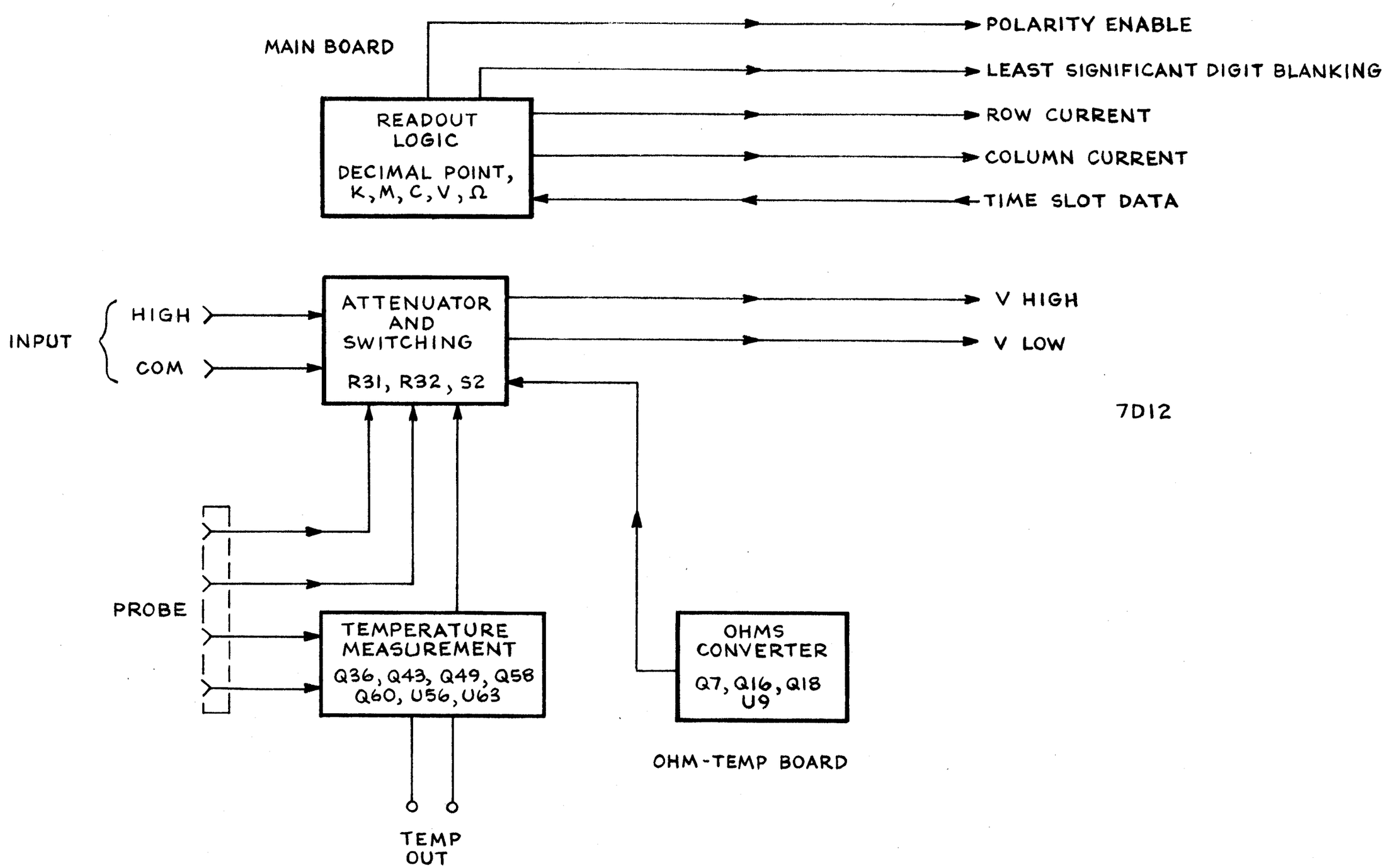

M1 BLOCK DIAGRAM

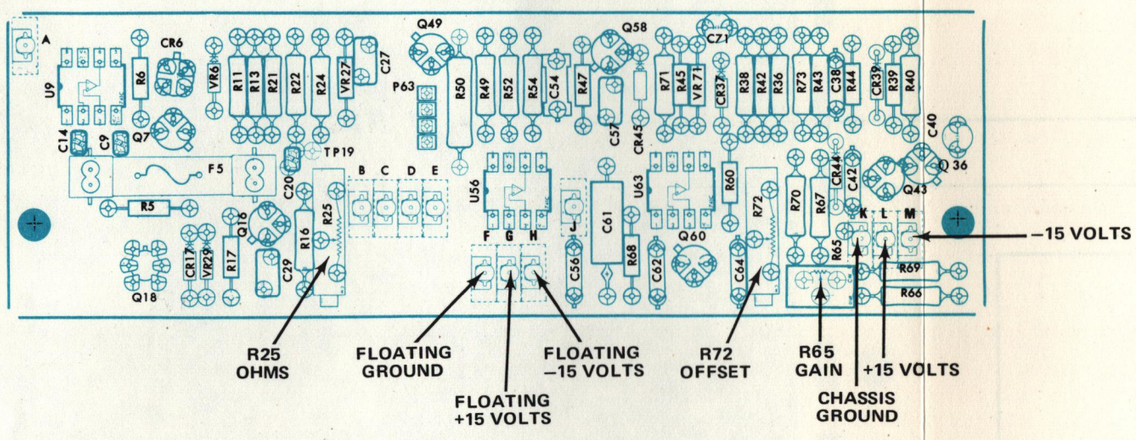

Fig. 3. OHM-TEMP board (A1) component and adjustment locations.

NOTE—Component locations will vary from those shown in this illustration in instruments with serial numbers prior to B010130.

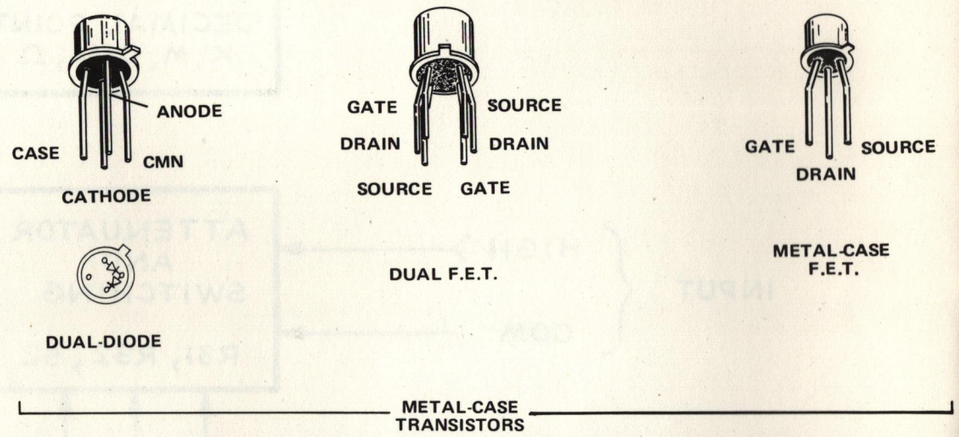

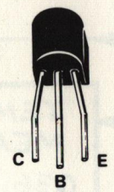

PLASTIC-CASE
TRANSISTOR

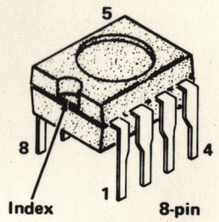

INTEGRATED CIRCUIT

MORE

M1

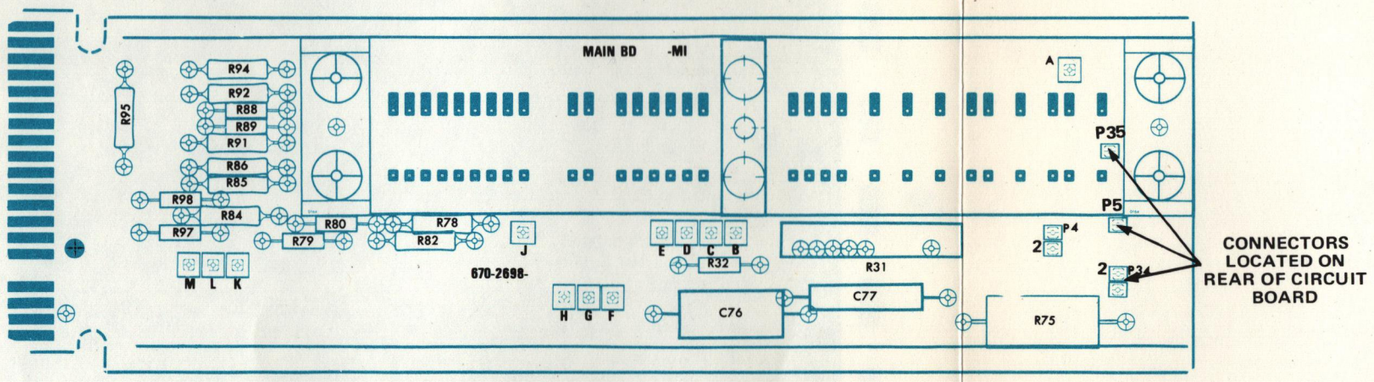

Fig. 4. MAIN board (A2) component locations.

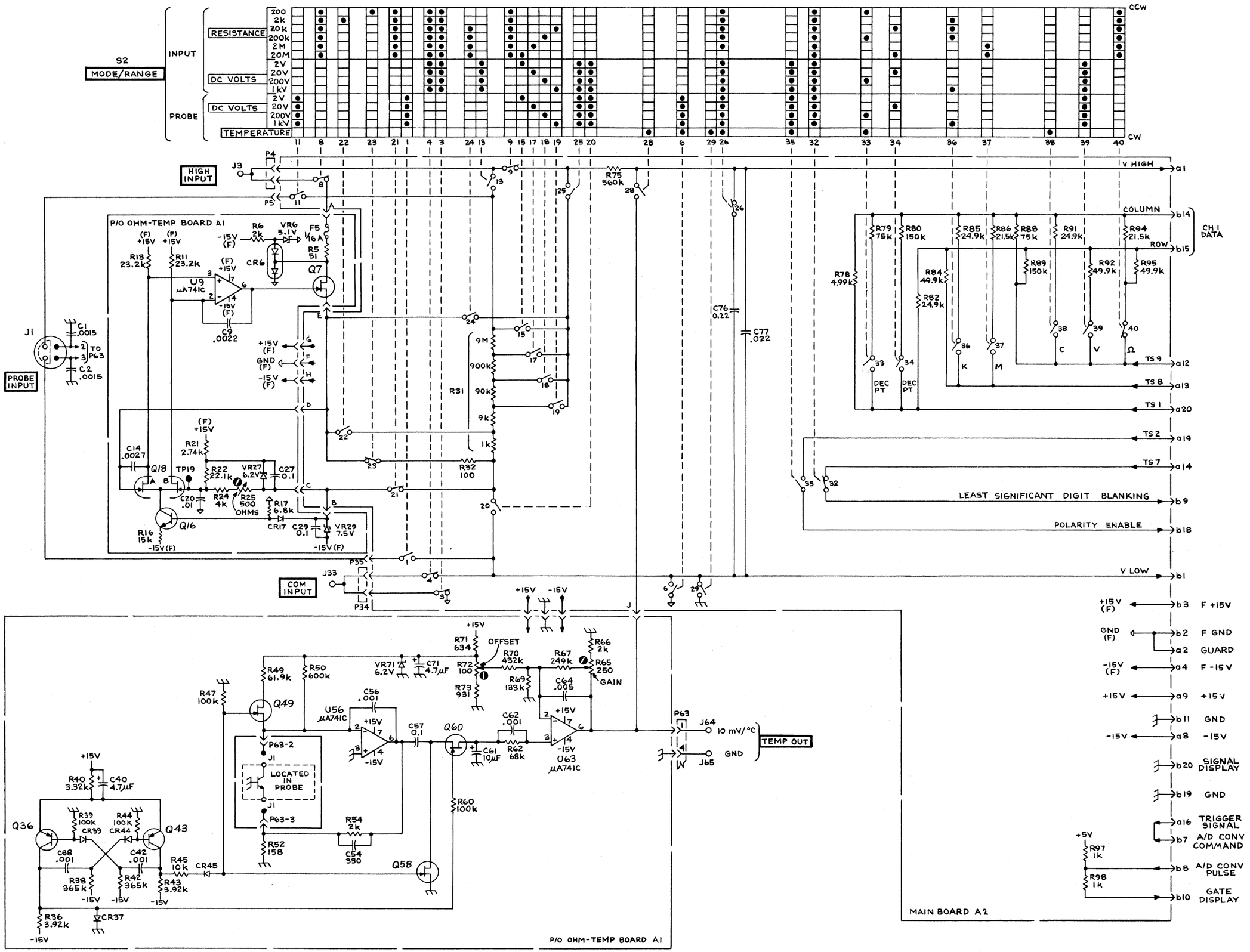

M1

MULTIFUNCTION MODULE