TEKTRONIX®

1440

AUTOMATIC VIDEO CORRECTOR

VIR SIGNAL REFERENCED

INSTRUCTION MANUAL

Tektronix, Inc.
P.O. Box 500
Beaverton, Oregon 97077

Serial Number _____

473

070-1498-02

WARRANTY

All TEKTRONIX instruments are warranted against defective materials and workmanship for one year. Any questions with respect to the warranty should be taken up with your TEKTRONIX Field Engineer or representative.

All requests for repairs and replacement parts should be directed to the TEKTRONIX Field Office or representative in your area. This will assure you the fastest possible service. Please include the instrument Type Number or Part Number and Serial Number with all requests for parts or service.

Specifications and price change privileges reserved.

Copyright © 1973, 1974, 1977, by Tektronix, Inc., Beaverton, Oregon. Printed in the United States of America. All rights reserved. Contents of this publication may not be reproduced in any form without permission of Tektronix, Inc.

U.S.A. and foreign TEKTRONIX products covered by U.S. and foreign patents and/or patents pending.

TEKTRONIX is a registered trademark of Tektronix, Inc.

TABLE OF CONTENTS

This manual is divided into two parts for safety purposes. Part I is intended for use both by operating and service personnel. The Safety Summary should be reviewed before operating or servicing the instrument.

Part II includes installation, programming, and service instructions that can lead to exposure of personnel to hazardous voltages. These instructions are intended for use by qualified service personnel only.

PART I
OPERATOR'S INFORMATION

		Page
SECTION 1	**OPERATING INSTRUCTIONS**	
	Safety Summary	1-1
	Introduction	1-1
	Description	1-2
	Front-Panel Controls	1-3
	Controls, Indicators, and Connectors	1-3
	Front Panel and Monitor	1-5
	Interpreting Front-Panel Indications	1-5
	Using Front-Panel Input and Output Jacks	1-6
	Using the Program Monitor Out	1-6
	Making Corrections	1-6
	Direct Correction	1-6
	Installation in the Program Line	1-6
	Basic Direct Correction Programming	1-7
	Functional Check-out Procedure for Direct Correction Operation	1-7
	Procedure	1-8
	Optional Steps	1-8
	Precorrection	1-8
	Precorrection Operation	1-8
	Installation in the Precorrection Loop	1-10
	Basic Precorrection Programming	1-10
	Operating Precautions	1-11
	Loop Delay	1-11
	Signal Clipping	1-11
	Processing Amplifiers	1-11
	Sync and Burst Re-Insertion	1-11
	Optional Programming	1-12
	Reduced Correction Ranges	1-12

		Page
SECTION 1	**OPERATING INSTRUCTIONS (cont)**	
	Other Operational Changes	1-12
	Sync Loss Bypass	1-12
	VIR Signal Line Selector	1-12
	VIR Signal Field Selector	1-12
	Clamp Time	1-12
	Burst Phase Correction Disable	1-12
	Correction Signal Source	1-12
	0-Carrier Sampling	1-12
	0-Carrier Pulse Polarity	1-12
	Internal Preset Adjustments	1-12
	Remote	1-13
	Remote Monitoring	1-13
	Remote Plug Wiring	1-13
	Remote Control	1-13
	Remote Bypass	1-14
	Full Remote Control	1-14
	Setting Up Automatic and Preset Correction Levels	1-14
	Specification	1-16
	Performance Conditions	1-16
	Table 1-3 Input and Output	1-16
	Table 1-4 Correction Ranges	1-17
	Table 1-5 Chrominance/ Luminance Gain Correction	1-18
	Table 1-6 Clamping, Noise, and Jitter	1-18
	Table 1-7 Linear Waveform Distortion	1-19
	Table 1-8 Non-Linear Waveform Distortion	1-19
	Table 1-9 Power Supply	1-19
	Table 1-10 Physical Characteristics	1-20
	Table 1-11 Environmental	1-20
	Glossary of Terms	1-20

TABLE OF CONTENTS (cont)

WARNING

THE REMAINING PORTION OF THIS TABLE OF CONTENTS LISTS THE SERVICING AND INSTALLATION INSTRUCTIONS. THESE INSTRUCTIONS ARE FOR USE BY QUALIFIED PERSONNEL ONLY. TO AVOID PERSONAL INJURY, DO NOT PERFORM ANY SERVICING OTHER THAN THAT CONTAINED IN THE OPERATOR'S INFORMATION UNLESS YOU ARE QUALIFIED TO DO SO.

PART II

SERVICE INFORMATION

SECTION 2	INSTALLATION and PROGRAMMING	Page
	INSTALLATION	2-1
	Packaging	2-1
	Repackaging for Shipment	2-1
	Electrical	2-2
	Table 2-1 Power Cord Conductor Identification	2-2
	Line Frequency and Voltage Ranges	2-2
	Power Line Conversion	2-2
	Mechanical	2-2
	Rackmounting	2-2
	PROGRAMMING	2-2
	Programming for Direct Correction	2-7
	Table 2-2 Direct Correction Programming	2-7
	Functional Check-Out for Direct Correction Programming	2-7
	Programming for Precorrection Operation	2-7
	Table 2-3 Precorrection Programming	2-9
	Connecting the 1440 for Precorrection Operation	2-10
	Optional Programming	2-10
	Reduced Correction Ranges	2-11
	Table 2-4 Reduced Correction Ranges	2-11
	Other Operational Changes	2-13
	Sync Loss Bypass	2-13
	VIR Signal Line Selector	2-13
	VIR Signal Field Selector	2-13
	Clamp Time	2-13
	Burst Phase Correction Disable	2-13
	Correction Signal Source	2-14
	0-Carrier Sampling	2-14
	0-Carrier Pulse Polarity	2-14

SECTION 3	CIRCUIT DESCRIPTION	Page
	INTERFACE AND RELAY (1)	3-1
	INPUT AMPLIFIER (2)	3-1
	Master Gain	3-1
	Clamp Gate	3-1
	CHROMA SEPARATOR (3)	3-1
	OUTPUT AMPLIFIER (4)	3-2
	Output Amp	3-2
	Sync Gain	3-2
	Setup	3-2
	BURST CORRECTION (5)	3-2
	Burst Amplitude Compensation	3-2
	Burst Phase	3-2
	SYNC STRIPPER (6)	3-3
	HORIZONTAL COUNTER (7)	3-5
	Sync Lock	3-5
	Sync Lock Detector	3-5
	VERTICAL COUNTER (8)	3-6
	Setup Timing	3-6
	Sync Gate	3-6
	CORRECTION LOGIC (9)	3-6
	Sync Loss Detector	3-6
	Clamp Pulse and Burst Gate	3-6
	Manual and Auto	3-6
	VIRS SAMPLING TIMING (10)	3-7
	DECODER SYNC STRIPPER (11)	3-7
	Input Amplifier	3-7
	Luminance Amplifier	3-8
	DEMODULATORS (12)	3-8
	Burst Gate	3-8
	Demodulators	3-8
	DECODED SIGNAL SAMPLING (13)	3-8

TABLE OF CONTENTS (cont)

SECTION 3	CIRCUIT DESCRIPTION (cont)	Page
	SYNC & BURST ERROR AMPS, VIDEO ERROR AMPS 14 15	3-9
	Bypass Logic	3-9
	Remote Unit Drive	3-9
	0-REFERENCE DRIVE 16	3-10
	POWER SUPPLY 17	3-10
	REMOTE CONNECTOR 18	3-10

SECTION 4	MAINTENANCE	
	INTRODUCTION	4-1
	PREVENTIVE MAINTENANCE	4-1
	Cleaning	4-1
	Exterior	4-1
	Interior	4-1
	Visual Inspection	4-1
	Transistor and Integrated Circuit Checks	4-1
	TROUBLESHOOTING	4-1
	Troubleshooting Aids	4-1
	Diagrams	4-1
	Circuit Boards	4-2
	Wire and Component Color Coding	4-2
	Table 4-1 Wiring Color Codes	4-2
	Table 4-2 Power Cord Conductor Identification	4-2
	Resistor Color Code	4-2
	Capacitor Marking	4-2
	Troubleshooting Techniques	4-2
	Troubleshooting Equipment	4-4
	Procedure	4-5
	CORRECTIVE MAINTENANCE	4-7
	General	4-7
	Obtaining Replacement Parts	4-7
	Special Parts	4-7
	Ordering Parts	4-7
	Component Replacement	4-7
	Multiple Terminal Connector Holders	4-7
	Circuit Boards	4-9
	Transistor and Integrated Circuit Replacement	4-9

SECTION 4	MAINTENANCE (cont)	Page
	LED Indicator Light Replacement	4-9
	Power Transformer Replacement	4-9
	Power Input Connector and RFI Filter Replacement	4-9
	Soldering Techniques	4-9
	Circuit Boards	4-9
	Metal Terminals	4-10
	Recalibration After Repair	4-10

SECTION 5	PERFORMANCE CHECK/ CALIBRATION PROCEDURE	
	INTRODUCTION	5-1
	TEST EQUIPMENT REQUIRED	5-1
	SHORT-FORM PROCEDURE	5-2
	Calibration Record	5-3
	CALIBRATION GUIDE	5-4
	PROCEDURE	5-5
	Initial Equipment Connections and Control Settings	5-5
	Setup	5-5
	Power Supply	5-7
	Timing	5-9
	Program Compensation	5-10
	Linear Waveform Distortion	5-14
	Non-Linear Waveform Distortion	5-15
	Intermodulation and Delay	5-15
	Return Loss	5-16
	Bypass Delay	5-17
	Spurious Subcarrier and Random Noise	5-17
	Demodulator Control	5-17
	Demodulator Control (Alternate Method)	5-19

SECTION 6	OPTIONS	
SECTION 7	REPLACEABLE ELECTRICAL PARTS	
SECTION 8	DIAGRAMS AND CIRCUIT BOARD ILLUSTRATIONS	
SECTION 9	REPLACEABLE MECHANICAL PARTS	
CHANGE INFORMATION		

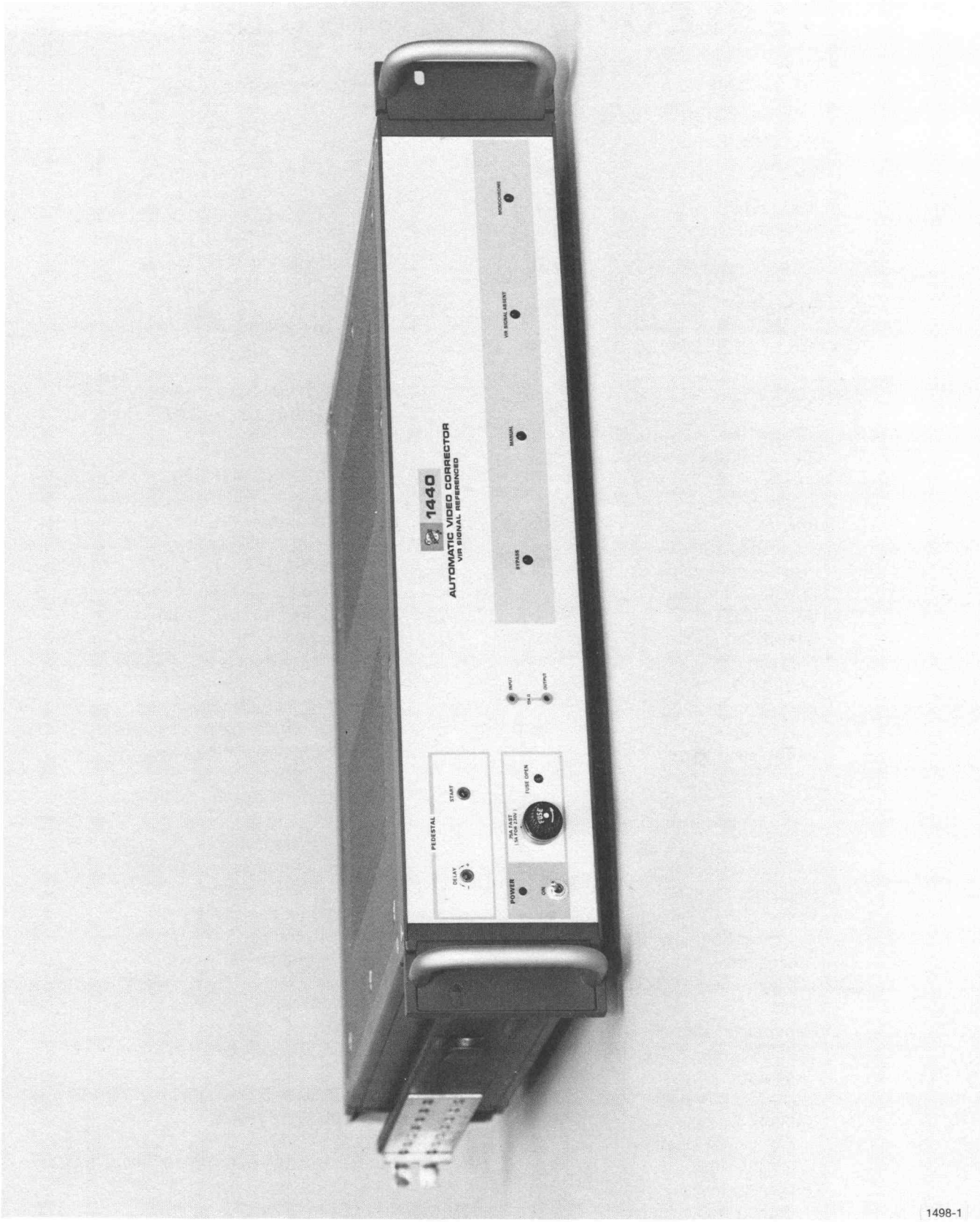

Fig. 1-1. 1440 Automatic Video Corrector.

PART I

OPERATORS INFORMATION

Section 1—1440

OPERATING INSTRUCTIONS

SAFETY SUMMARY

This manual contains safety information that the operator and service technician must follow to avoid hazardous voltages and to ensure safe operation of the instrument.

WARNING information is intended to protect the operator or service technician from injury.

CAUTION information is intended to protect the instrument from damage.

The following are general safety precautions that must be observed during all phases of operation and maintenance.

WARNING

To reduce electrical shock hazard, the instrument must be properly grounded. Use only the three-wire power cord supplied with the instrument.

Electrical shock hazards are present inside the instrument. Only qualified service personnel should remove the instrument covers.

INTRODUCTION

This section of the manual provides the operator with information to operate the 1440. This section includes (1) Description of the 1440; (2) Controls, Indicators, and Connectors; Front Panel and Monitor; (3) Direct Correction and Programming; (4) Functional Check-Out Procedure; (5) Precorrection; (6) Specification; and (7) Glossary of Television Terms.

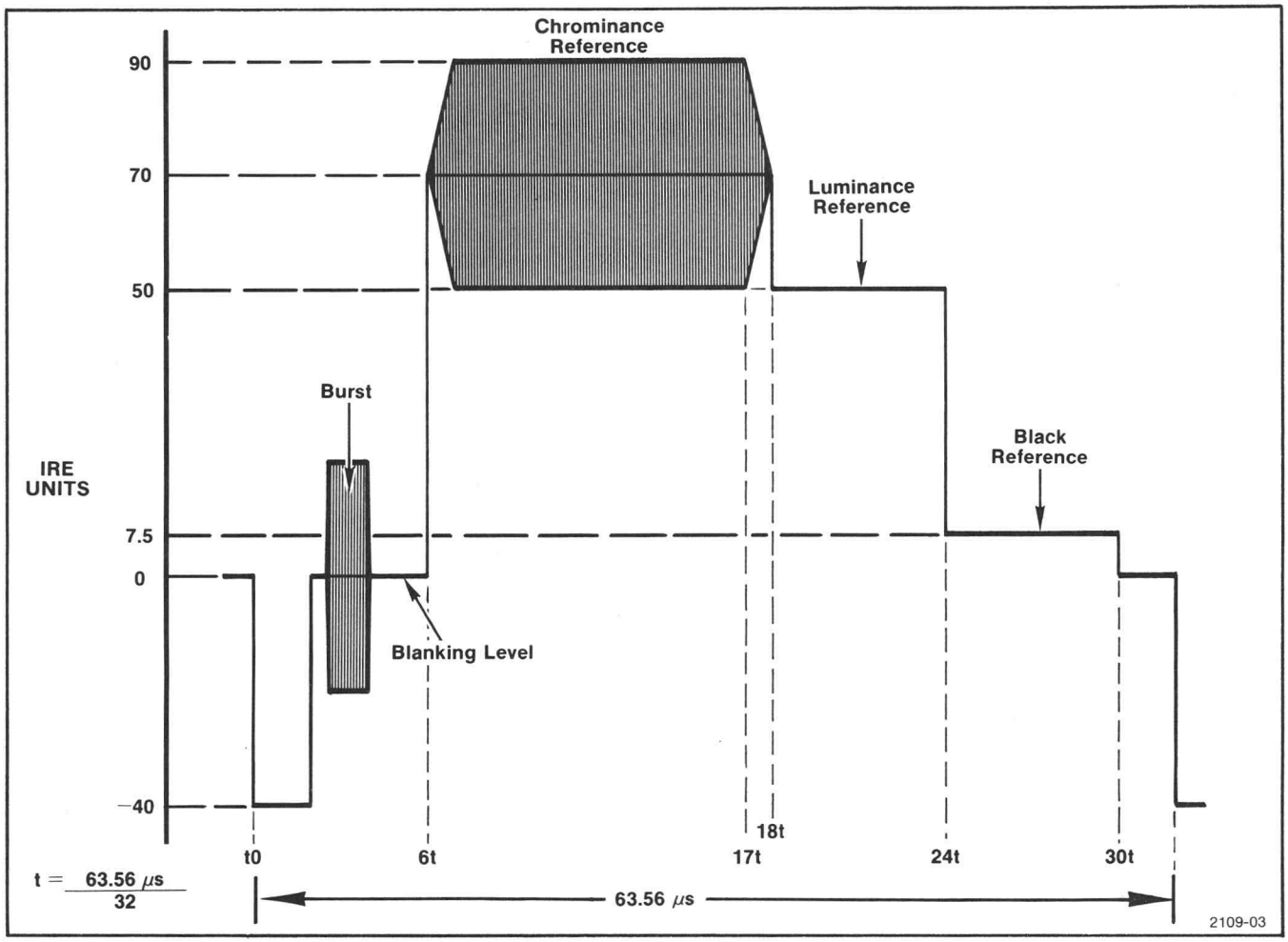

Fig. 1-2. The Vertical Interval Reference Signal (VIR Signal).

Description

The 1440 AUTOMATIC VIDEO CORRECTOR is an "in-line" NTSC processing amplifier that uses the Vertical Interval Reference (VIR) Signal [1] to automatically correct video gain, chrominance-to-luminance gain ratio, setup level, and burst phase relation to chroma (hue). Sync and burst amplitudes are corrected separately.

Video gain is controlled by the 50 IRE level of the VIR signal. Chrominance-to-luminance gain ratio and burst phase are controlled by the amplitude and phase of the VIR signal chrominance. Setup level is controlled by the 7.5 IRE level of the VIR signal. Sync and burst gains are controlled respective to their standard amplitudes. Fig. 1-2 shows the standard Vertical Interval Reference signal (VIR signal). The VIR signal may appear on any line from line 15 through line 21, and on either or both fields. Internal plug-jumpers permit setting the 1440 to operate within these conditions. The 1440 iis normally factory-wired to select line 19 on both fields.

In addition to the "in-line" correction mode, the 1440 can be used for video precorrection. To precorrect, a closed loop is formed to recover the reference signal from the output signal and use it as the correction reference. The most common application for precorrection is around a transmitter. The output signal, including the VIR signal, is recovered through a precision demodulator and is applied to the 1440 EXTERNAL CORRECTION INPUT. Precorrecting holds the output of the transmitter constant by precorrecting its input program video.

[1] **Proposed by the Broadcast Television Systems Committee of the Electronics Industries Association (EIA). See RP-1, passed by EIA dated 7/1/72.**

Front-Panel Controls

Two front-panel controls (screwdriver adjustments) are provided to compensate for various pedestal widths that may be encountered in different processing amplifiers. PEDESTAL DELAY can be adjusted so that the 1440 setup level matches the signal pedestal at the 62 μs point on the video line. PEDESTAL START matches 1440 setup to signal pedestal at the 12 μs point on the video line.

PEDESTAL DELAY should be adjusted first, because it affects the timing of the pedestal with respect to sync. PEDESTAL START affects only the start of the pedestal, and should be adjusted after the PEDESTAL DELAY is set. This pedestal is added to or substracted from the signal to correct setup level.

Front-Panel Test Points

Two front-panel test points, labeled INPUT and OUTPUT, are provided to enable the user to determine signal state. The INPUT test point is electrically at the input to the input amplifier, except being through an impedance of 15 k ohm, and can be used to determine if the video program has come through the interface into the amplifier. The OUTPUT test point is electrically at the output of the output amplifier through a 15 k ohm impedance, and can be used to determine the state of the signal after processing. No signal is present at these points in Bypass mode.

The 1440 may be remotely set to MANUAL operating mode with all corrections remotely controlled. If a VIR signal is not present, the 1440 will automatically go to MANUAL. If burst is not present, but a VIR signal is, burst phase and burst gain correction circuits do not act.

Outputs are provided so that the amount of correction being applied by the 1440 can be monitored. A Remote Monitor Unit (Tektronix Part No. 015-0239-00) is available for this purpose.

Continuity of the program line is protected by a bypass relay. The program video is automatically bypassed through a delay line, equal to the 1440 processing time, in the event there is a power failure or upon actuation of a remote bypass switch. This feature even allows removal of the 1440 from the equipment rack with minimum disruption to the program line; minimal time difference between the corrected or bypassed signal will be observed.

CONTROLS, INDICATORS, AND CONNECTORS

FRONT PANEL

POWER (1)	Miniature toggle switch, equipped with green jeweled indicator lamp, providing control over power applied to the 1440.
PEDESTAL (2)	DELAY: Adjusts pedestal position with respect to sync. START: Adjusts pedestal width.
FUSE OPEN (3)	Indicates line fuse open. When the fuse is open the 1440 automatically reverts to the bypass mode.
INPUT (4)	Front panel jack provided to monitor the program signal applied to the input amplifier. Impedance is 15 k ohm.
OUTPUT (5)	Front panel jack provided to monitor the program signal out at the output of the output amplifier. Impedance is 15 k ohm.
INSTRUMENT BYPASS (6)	Indicates that the program video is being passed to the program output without correction.
MANUAL (7)	Indicates that the 1440 has either been remotely switched to manual control; or has reverted to a preset correction, due to loss of VIR signal.

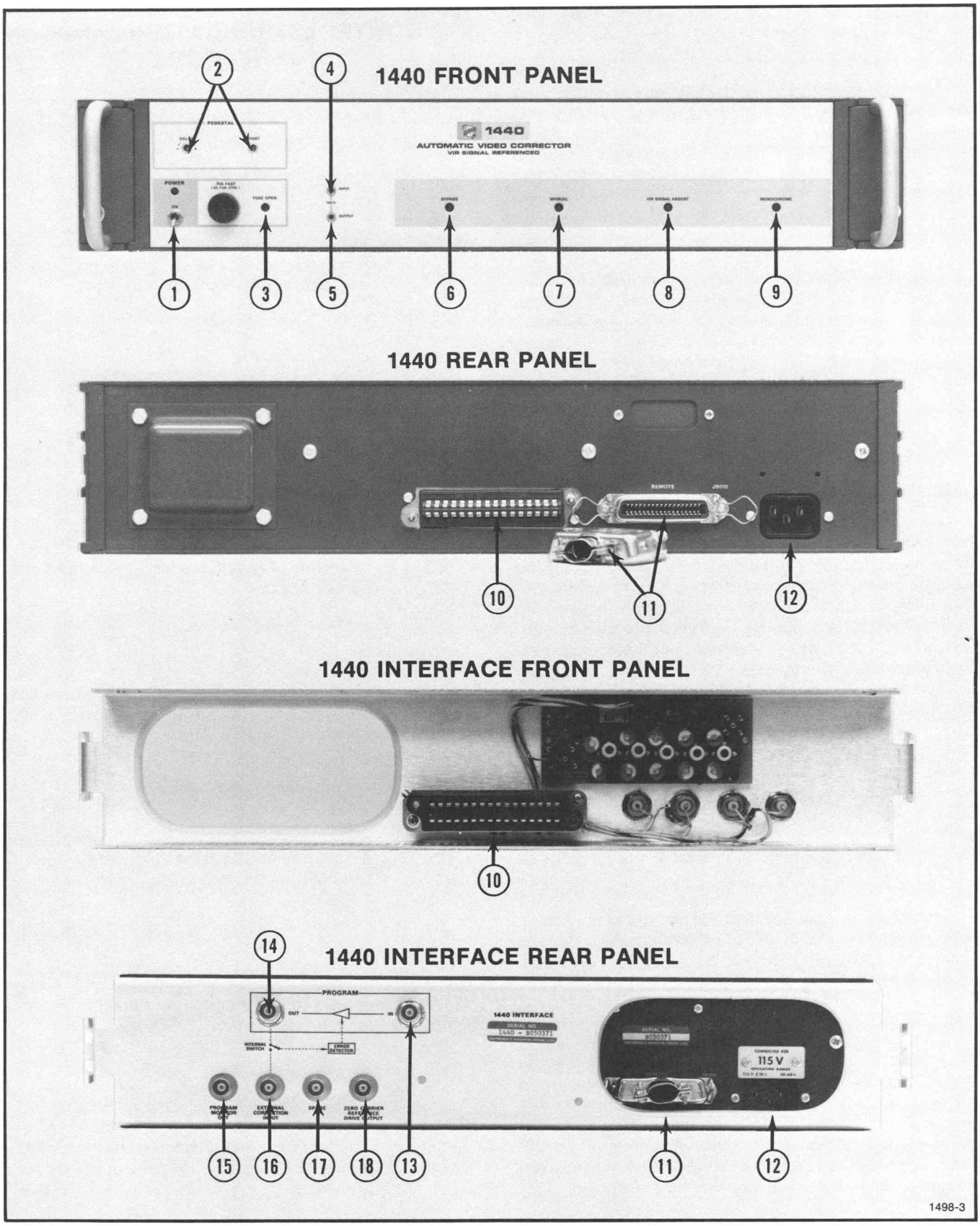

Fig. 1-3. 1440 controls and connectors.

VIR SIGNAL ABSENT (8) — Indicates the loss of the reference signal on the incoming program video.

MONO-CHROME (9) — Indicates the loss of burst from the incoming program video.

REAR PANEL

Input Connector (10) — 32 pin jack that mates to the interface plug, providing access to the 1440 for input, output, monitor and bypass relay control functions.

REMOTE (11) — 36 pin plug and jack assembly intended for remote monitoring or control of correction.

Power Receptacle (12) — Contains the line filter. Mates with a narrow-spaced, European type female power plug.

INTERFACE

Input Connector (10) — The 32 pin plug that mates to the 1440 jack.

PROGRAM IN (13) — The 75 ohm input to the 1440.

PROGRAM OUT (14) — The 75 ohm output from the 1440.

PROGRAM MONITOR OUT (15) — Provides the same signal as the PROGRAM OUT, however it does not have a signal present in the bypassed mode.

EXTERNAL COR-RECTION INPUT (16) — Used in the precorrection mode of operation to apply the output of the demodulator to the 1440.

SPARE (17) — Provided to allow flexibility of application at a later time.

ZERO-CAR-RIER REF-ERENCE DRIVE OUT-PUT (18) — Used to control the timing of the zero carrier reference pulse from the demodulator.

FRONT PANEL AND MONITOR

Interpreting Front-Panel Indications

The 1440 Automatic Video Corrector is designed to operate without an operator present; however, it is equipped with four status-indicating lamps and a pilot lamp to relay its operating status. Information about the signal and the correction, if any, can be ascertained from these indicators.

Table 1-1 gives the status of the signal and the correction being applied for all indications of the status indicating lamps.

Table 1-1
STATUS INDICATION AND CORRECTION

Indication	Signal	Correction
INSTRUMENT BYPASS	No Sync, or signal missing	none
VIR SIGNAL ABSENT	VIR signal not on the program, or external correction signal	preset levels
MANUAL (Remote Control)	No VIR signal (or manual remote control)	preset levels or manual remote control
MONOCHROME	Monochrome signal	no burst gain or phase correction

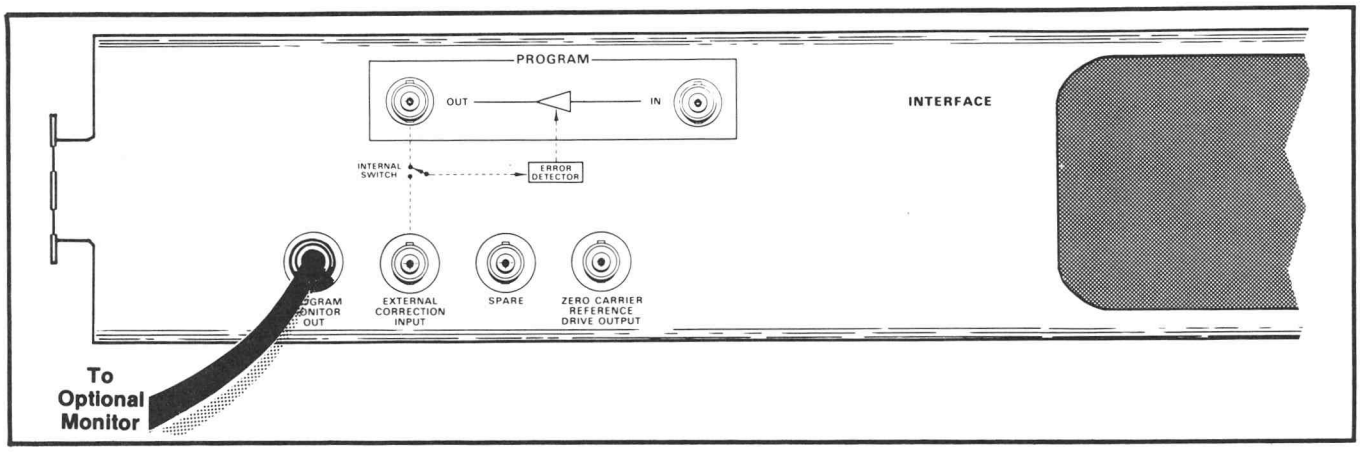

Fig. 1-4. Location of PROGRAM MONITOR OUT connector.

Using Front-Panel Input and Output Jacks

For convenience, the input to and the output of the 1440 can be monitored through the front-panel pin jacks. They are isolated from the program line by 15 kΩ and taken right at the input to the input amplifier and at the output of the output amplifier. The INPUT and OUTPUT jacks, as well as the remainder of the 1440 signal processing circuits, are inactive when the 1440 is bypassed.

Using the Program Monitor Out

The 1440 is equipped with a 75 Ω output to drive a local waveform monitor without disrupting the program line. This output is in parallel with the program line output, and provides an accurate signal for monitoring. Since the PROGRAM MONITOR OUT is a portion of the signal processing circuitry, it does not operate when the 1440 is in BYPASS mode of operation. See Fig. 1-4 for the location of the PROGRAM MONITOR OUT connector.

MAKING CORRECTIONS

The 1440 Automatic Video Corrector can be used in either of two correction modes, direct correction and precorrection. Both types of correction require that the video program line, with the VIR signal on the program video, be routed through the 1440 signal processing circuits. They differ in the method of recovering the reference signal. Each type of correction will be described in its own sub-section. Each sub-section includes information required to become familiar with that mode of operation.

DIRECT CORRECTION

Direct correction results from sampling the reference at the 1440 output and using the sample to control the gain of correction amplifiers. This results in the program video being corrected by the amount required to return the reference signal to unity at the 1440 PROGRAM OUT connector. Fig. 1-5 is a simplified illustration of how the direct correction is achieved.

Installation in the Program Line

The 1440 may be inserted into the program line at almost any point desired. The 1440 does, however, impose some limits; principal of these are the addition of 145 ns of video delay, and resistance to fading.

If the VIR signal is faded along with the program signal, the 1440 will attempt to correct the reference signal (and thus, the program video) and defeat the purpose of fading the program video.

Fig. 1-6 shows the connection of the 1440 into the program line (for direct correction).

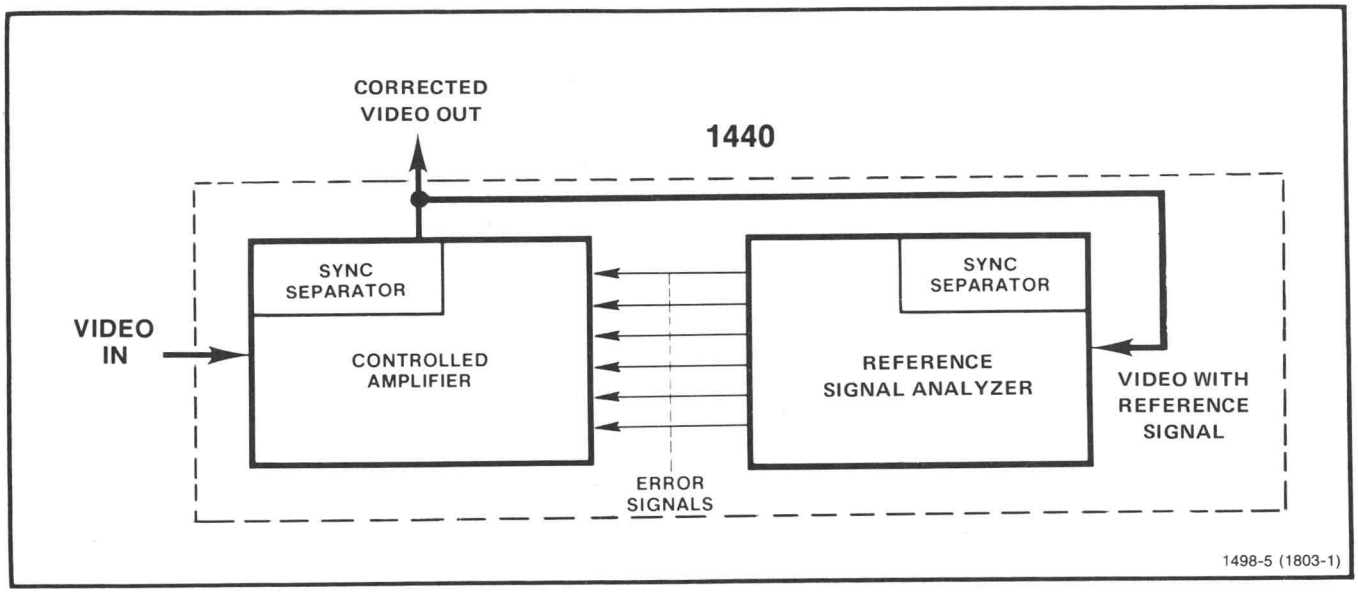

Fig. 1-5. Simplified operation of 1440 making direct correction.

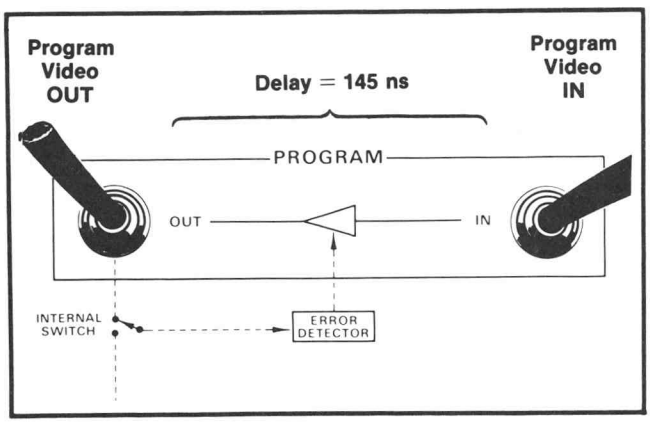

Fig. 1-6. Installing the 1440 in the program line.

Basic Direct Correction Programming

The 1440 is shipped programmed for maximum corrections in the direct correction mode. See Programming in Section 2 of this manual (Installation and Programming) for details of changing programming.

WARNING

Changing of programming in the 1440 requires that the covers of the instrument be removed, and electrical plug-jumpers must be moved to different positions. This operation should only be performed by qualified service personnel, since exposure to potentially-hazardous voltages is involved.

Functional Check-Out Procedure for Direct Correction Operation

This procedure is intended to serve a dual purpose. First, the procedure should familiarize the operator with the various functions of the 1440 when used in the direct correction mode, and secondly, performing the following steps serves as an operational check-out of the system.

NOTE

The Functional Check-Out Procedure that follows does not check all performance requirements listed under Specification. See Section 5 (Performance Check/Calibration Procedure) for a complete Performance Check Procedure.

This procedure requires a video test signal source capable of providing composite video, VIT signals programmable to any line in the vertical interval, and a VIR signal. For example, the TEKTRONIX 149A NTSC Test Signal Generator. In addition, if optional steps 5 through 8 are to be performed, two other pieces of test equipment are required: (1) a waveform monitor to observe field-rate and line-rate displays. For example, the TEKTRONIX 1480 Waveform Monitor, and (2) a video processing amplifier with a variable output-signal amplitude.

Procedure

1. Connect the 1440 to a suitable source of ac power. Set the 1440 POWER switch to ON. Note that the MANUAL, VIR SIGNAL ABSENT, and MONOCHROME indicators are lit.

2. Program the video test signal generator for a VIR signal on line 19, both fields. Connect the video test signal generator output to the 1440 PROGRAM IN connector. Note that all indicator LED's are out.

3. Remove the VIR signal from the incoming video signal. Note that the VIR SIGNAL ABSENT and MANUAL indicators are lit. Restore the VIR signal to the incoming video.

4. Remove the color burst from the incoming video signal. Note that the MONOCHROME indicator is lit. Restore the color burst to the incoming video.

Optional Steps

The following steps serve to verify that the 1440 performs the amplitude-correction function for input signals that are either greater or less than normal amplitude.

5. Connect the 1440 PROGRAM OUT to the waveform monitor loop-through video input connector. Terminate the other loop-through connector with a 75-ohm End-Line Termination (Tektronix Part No. 011-0102-00).

6. Connect the video test signal generator to the processing amplifier input. Connect the processing amplifier output to the 1440 PROGRAM IN connector.

7. Increase gain of the processing amplifier up to twice unity. Note that the 1440 PROGRAM OUT signal (as viewed on the waveform monitor) does not change amplitude.

8. Decrease gain of the processing amplifier to one-half unity. Note that the 1440 PROGRAM OUT signal does not change amplitude.

PRECORRECTION

Precorrection differs from direct correction in the way that the reference signal is recovered. Instead of sampling it directly from the 1440 program video out, the reference signal is recovered after it has passed through other equipment. In Fig. 1-7, the reference signal (line 19 VIRS) is recovered from the output of a video transmitter through a precision demodulator. The recovered signal is applied to the EXTERNAL CORRECTION INPUT of the 1440.

Fig. 1-8 is a simplified illustration of how the precorrection is achieved.

Fig. 1-7 also shows a Zero-Carrier Reference Drive pulse being returned to the Demodulator. This allows the 1440 to control the position of the Zero-Carrier Reference pulse, both as to line and position on the line. The end result is a usable Zero-Carrier Reference pulse that cannot interfere with the correction. The Demodulator may require modification to accept the drive pulse. Contact its manufacturer for specific modification instructions.

Precorrection Operation

The 1440 generates a Zero-Carrier Reference Drive pulse that gates a Zero-Carrier Reference pulse in the Demodulator. The Demodulator output is applied through the 1440 EXTERNAL CORRECTION INPUT connector to the Zero-Carrier Sampling circuit.

The Zero-Carrier Sampling circuit dc level is adjusted so that the output is zero volts when the Zero-Carrier Reference pulse is the proper amplitude. This output is applied to the Master Gain Correction circuit in the 1440.

The VIR signal 50 IRE level is sampled in the Luminance Amplitude Sampling circuit. The Luminance Amplitude Sampling output signal is applied to the Master Gain Correction circuit. When the VIR signal is the proper amplitude, the sampled level at the input ot the Master Gain Correction circuit is zero volts.

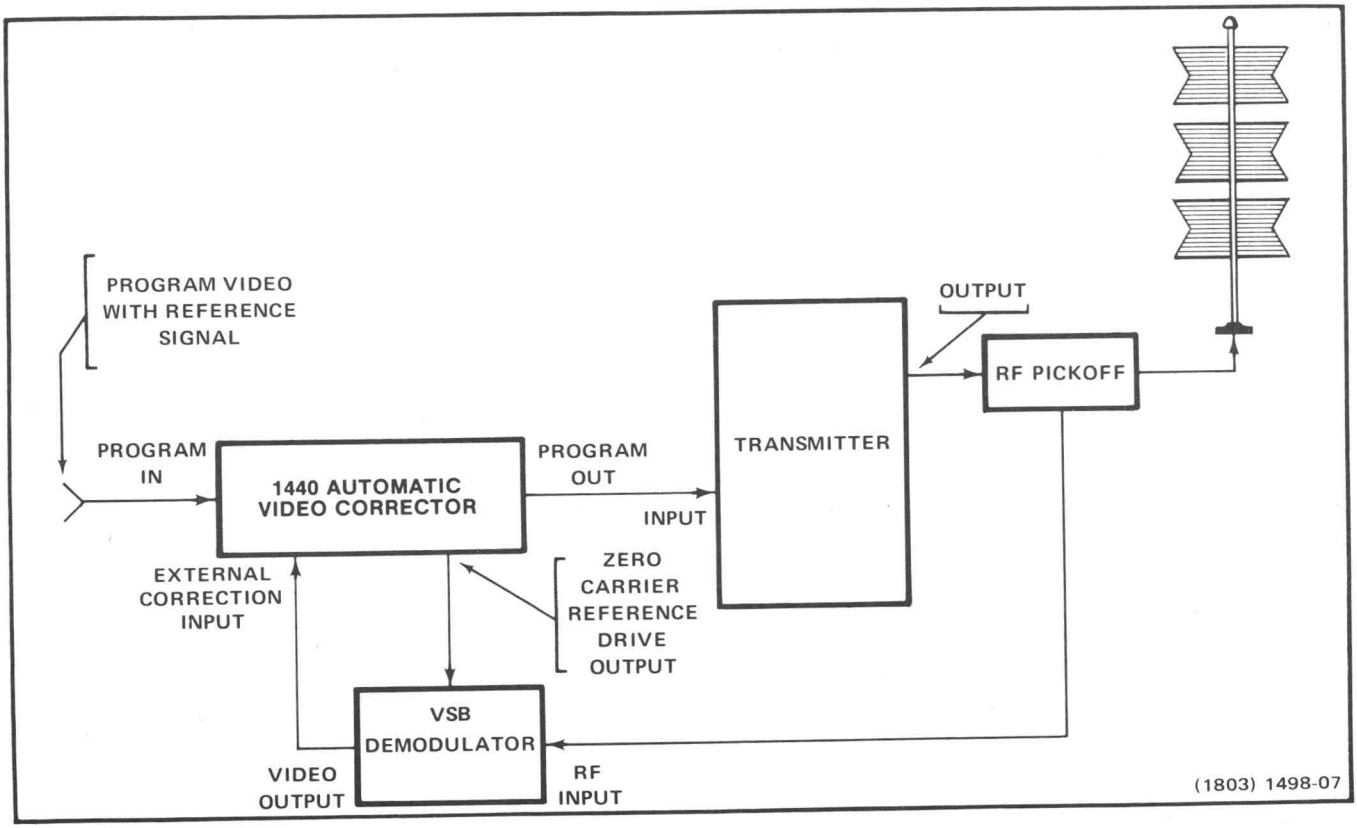

Fig. 1-7. The precorrection loop.

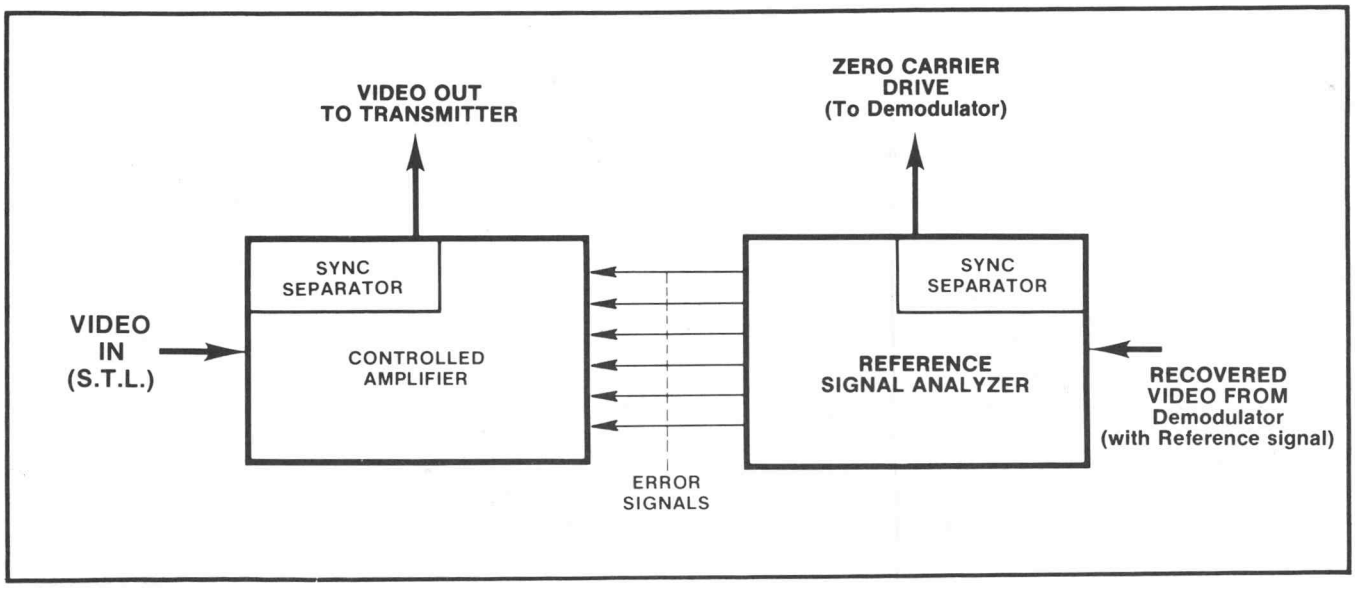

Fig. 1-8. Simplified operation of 1440 making precorrection.

The Zero-Carrier Sampling output signal goes negative when the Zero-Carrier Reference pulse increases in amplitude. The Luminance Amplitude Sampling output signal goes positive when the VIR signal amplitude increases. These levels are applied to opposite ends of a resistive divider, and the gain of the Zero-Carrier Sampling circuit is adjusted for zero volts at the center of the divider when the ratio of VIR signal to Zero-Carrier Reference pulse is correct. When the ratio of these two levels changes, the Master Gain Correction circuit changes the 1440 output amplitude, changing the video transmitter output.

Any amplitude change occurring in the Demodulator will not change the input to the transmitter, because the ratio of VIR signal to Zero-Carrier Reference pulse will not change. (Both levels will go up or down together with changes in Demodulator amplitude, maintaining a constant ratio.)

Any amplitude change occurring in the transmitter will change the ratio of VIR signal to Zero-Carrier Reference pulse, causing the 1440 to change the input to the transmitter.

Installation in the Precorrection Loop

Fig. 1-9 shows the proper connections for the precorrection mode of operation. The use of the waveform monitor is optional. Since this is now the precorrection mode, remember that the PROGRAM MONITOR OUT signal is exactly the same as the PROGRAM OUT signal and will reflect the precorrection.

Basic Precorrection Programming

The basic precorrection program, except for three essential differences, is the same as the direct correction program. The three major differences are: (1) correction source; (2) zero carrier reference control; and (3) location of the Zero-Carrier Reference Drive pulse.

The 1440 is factory-wired to place the Zero-Carrier Reference pulse on line 20.

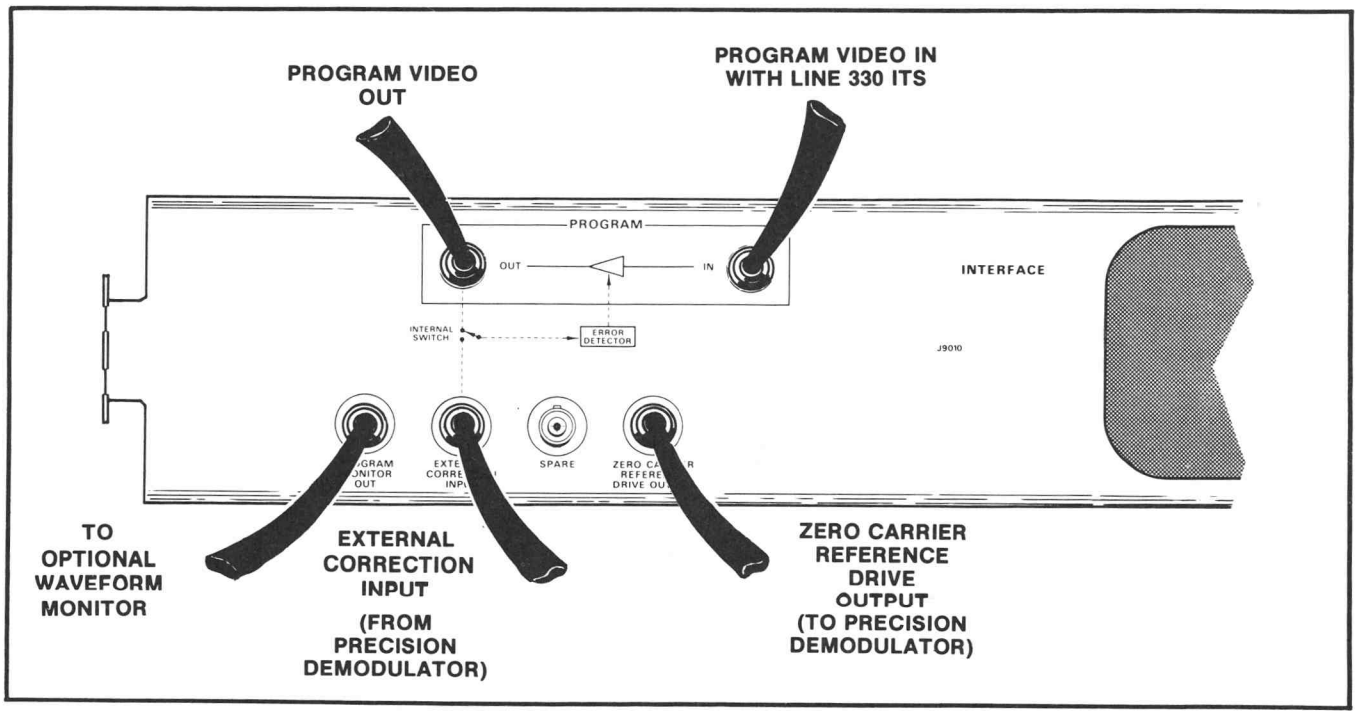

Fig. 1-9. Installing the 1440 in the precorrection loop.

Operating Precautions

Performance-limiting factors that have the greatest effect on the precorrection loop around a video transmitter are: (1) loop delay; (2) sync compression; (3) the use of processing amplifiers; and (4) sync and burst re-insertion.

Loop Delay. When the 1440 and Demodulator are both located at the transmitter site, loop delay is not a concern. However, if either the Demodulator or the 1440 is located some distance from the transmitter (off-site), loop delay becomes a crucial concern. The 1440 will operate and provide good corrections with a loop delay up to 30 microseconds between the PROGRAM OUT signal and the EXTERNAL CORRECTION INPUT signal. See your local Video Specialist Field Engineer for details if a longer loop delay must be accommodated.

Fig. 1-10 shows how to set up for a measurement of loop delay, using a 1480 Waveform Monitor. Fig. 1-11 shows how to determine the delay from the waveform monitor display.

The 1480 Line Selector is set to line 19 (or whichever line the VIR signal is on). The Field Selector is set for All Fields, and the Display controls are set to provide a display at a sweep rate that will permit measurement of the loop delay (similar to Fig. 1-11). The 1480 front-panel Sync switch is set to Ext. The B Input signal is displayed, and the display is positioned so that the leading edge of the horizontal sync pulse falls on the first graticule scale marking on the left edge of the screen. Then, the A Input signal is displayed. The delay is measured from the first scale marking to the leading edge of horizontal sync. In Fig. 1-11, a 5 μs/div sweep rate is shown, giving an indicated loop delay of 20 microseconds.

Signal Clipping. In the precorrection loop, sync compression (or other signal clipping) can cause the 1440 to have problems with making corrections. The 1440 will attempt to make a correction, but since it sees no results, it continues to increase gain until the maximum is reached.

Processing Amplifiers. Processing amplifiers with automatic gain control (agc) cannot be used within the precorrection loop. They will react to the signal changes, in opposition to the 1440 corrections. This will cause excessive fluctuations in the transmitter input-signal. If a processing amplifier must be used, it should be connected ahead of the 1440 PROGRAM IN connector.

Sync and Burst Re-Insertion. If automatic sync-correction is to be made, do not re-insert sync after the 1440.

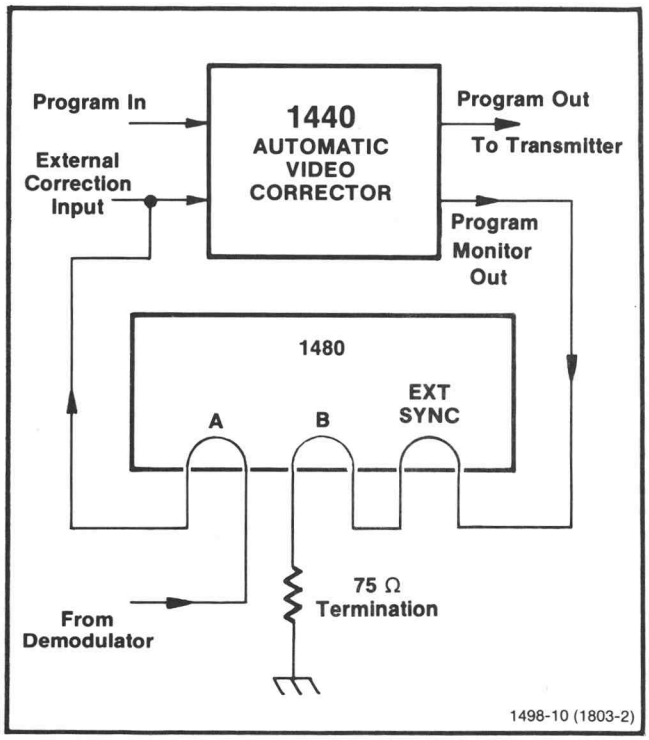

Fig. 1-10. How to set up loop delay measurement.

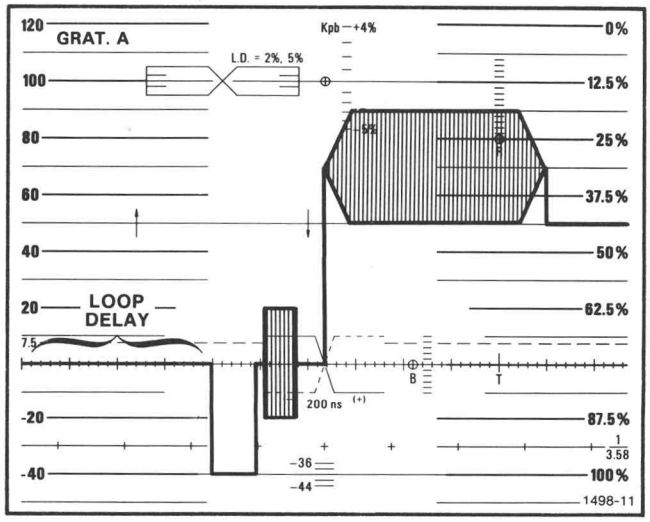

Fig. 1-11. How to read loop delay.

OPTIONAL PROGRAMMING

The 1440 Automatic Video Corrector is capable of operating in a number of applications. This section so far has described the two principle applications in their most common programming configurations. Optional Programming covers additional programming to alter ranges, delete some corrections, change references, and even dictate when the 1440 will go into Bypass mode.

Reduced Correction Ranges

There are times when full correction range for one or more of the correction parameters may not be desirable. The 1440 is designed with reduced gain available on four of the corrections. The parameters are: (1) Master Gain Correction; (2) Burst Gain Correction; (3) Setup Correction; and (4) Sync Level Correction. For programming details, see Optional Programming under Programming in Part II of this manual.

OTHER OPERATIONAL CHANGES

Several options are available in the 1440 by use of plug-jumpers on the etched-circuit boards. The following explains the various options. For instructions in changing plug-jumpers, see Programming in Part II of this manual.

Sync Loss Bypass

P5749 (Error Amps board) provides the option of switching the 1440 to the Bypass mode upon loss of sync, or allowing the signal to pass through the circuitry in the normal manner. This function allows switching between signal sources on the program line, without causing the 1440 to go into the Bypass mode.

VIR Signal Line Selector

P3280 (Timing board) is the VIR signal detector line-selector. This plug-jumper allows any line (from line 15 through 21) to be selected for VIR signal detection.

VIR Signal Field Selector

P3130 (Timing board) selects field one, field two, or both fields for VIR signal detection. Detection in both fields is the normal mode of operation.

Clamp Time

P1567 (Processing board) selects the clamp time-constant. In the normal operating mode, the signal is clamped within one line after a level shift. The other mode (SLOW) clamps within ten lines, and is useful in reducing the effects of noise-caused keyboarding.

Burst Phase Correction Disable

As factory-connected, P1320 (Processing board) connects the output of the Chroma Amplitude Compensation circuit to the input of the Burst Amplitude Compensation circuit, and thence to the Burst Phase Correction circuit. Burst signals from this circuit correct for phase errors of the output burst. With P1320 moved to its alternate position (OFF), the Burst Phase Correction circuit is disabled.

Correction Signal Source

P4384 (Decoder board) selects the signal source for correction. In the normal mode (INT), signals arriving at the PROGRAM IN connector are corrected. With the four-pin jumper rotated 90°, a signal that has gone through another instrument "downstream" of the 1440 (for example, a transmitter) can be looped back to the EXTERNAL CORRECTION INPUT. In this mode, the signal from the 1440 PROGRAM OUT changes amplitude to correct for "downstream" signal errors. (See Fig. 1-7.)

0-Carrier Sampling

P669 (0-Carrier Reference board) connects the 0-Carrier Sampling circuit to the Master Gain Correction circuit, or grounds this input to the Master Gain Correction circuit. The 0-Carrier Sampling circuit should be connected to the Master Gain Correction circuit only if the 1440 is going to be used in the transmitter-demodulator loop (precorrection loop). In all other applications, P669 should be in the 'OFF' position.

0-Carrier Pulse Polarity

P664 (0-Carrier Reference board) selects the 0-Carrier Reference Drive pulse-polarity to accommodate various demodulator requirements.

INTERNAL PRESET ADJUSTMENTS

In all operating modes, precautions are taken to prevent program disruption if the reference signal is lost. This is done by setting up preset gain and phase relationships for the 1440 when the reference signal is lost. If remote control is used, these adjustments are brought out to the Remote Control Unit front panel, and are adjusted there; see description under REMOTE heading. Without remote control, the adjustments are internal within the 1440.

The 1440 is shipped from the factory with the preset corrections set at unity. Any or all may be set to correct for known program chain deficiencies. The amount of correction available is the same as the automatic correction, and is limited by the programming. For example, total burst-level correction available for the reduced correction option is ±3 dB, compared to ±6 dB for full correction.

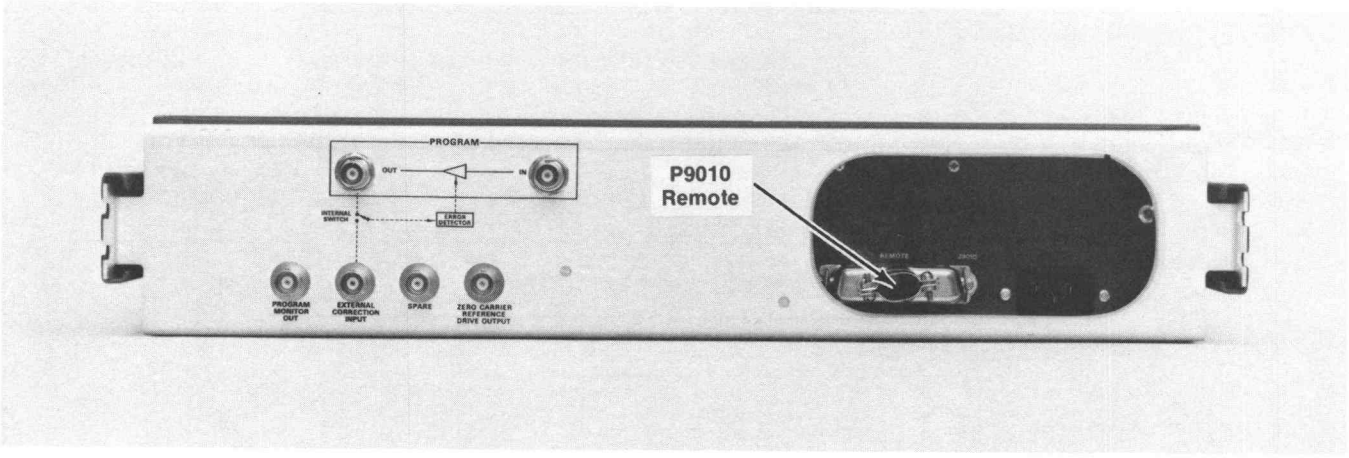

Fig. 1-12. 1440 rear panel and REMOTE plug and jack.

All of the Preset adjustments, except Burst Phase, can be made with a waveform monitor on the PROGRAM MONITOR OUT or at the point of correction (point of correction for a pre-corrected transmitter is its output). The 1440 is normally set for unity when it reverts to Preset, but may be adjusted for any amount of correction (within the limits) desired. The Calibration Procedure in Section 5 of this manual includes instructions to return the 1440 to unity settings.

REMOTE

To add to the versatility of the 1440 Automatic Video Corrector, its operation can be remotely controlled and monitored. These added features can be used at any time, either totally or partially. Access is through the 1440 rear-panel REMOTE jack, J9010, shown in Fig. 1-12.

Remote Monitoring

Remote monitoring consists of the circuitry to drive meters. The metering circuits for Master Gain, Chroma Gain, Setup, Burst Gain, Burst Phase, and Sync Gain contain meter tracking adjustments. These are internal adjustments in the 1440. The adjustment of these parameters is covered in the Calibration Procedure in Section 5 of this manual.

In order to show corrections of either polarity, center-scale meters are used. Any one or all of the corrections can be monitored with equal accuracy if 50 μA full-scale deflection (either direction) meters, with series resistors are used. To set-up the Gain and Centering: zero the meter with the Centering adjustment (when no correction is being made), then offset the reference signal by a known amount and adjust the Gain to reflect the correction being applied.

An excellent companion unit to the 1440 for monitoring applications is the Remote Monitor Unit (1440), Tektronix Part Number 015-0239-00. This unit contains front-panel meters, scaled plus (+) and minus (−) to either side of center for each of the six corrected parameters.

Remote Plug Wiring

Fig. 1-13 shows the pin numbers and the signal input or output for the remote functions. J9010/P9010 are the access for both remote monitoring and remote control. Note that there are seven Error Outputs instead of the six mentioned under REMOTE MONITOR. The additional output is for monitoring the Zero Carrier Reference pulse. It too can be used to drive a meter; however, it is only active during operation in the precorrection mode.

In addition to monitoring with meters, a strip-chart recorder can be used to determine changes in the program chain over a longer period of time, and also provides a permanent record that may be reviewed at the user's convenience.

Remote Control

Control over corrections and operation can be exercised from a remote location. The automatic and preset correction levels are brought to REMOTE jack, J9010, along with control over correction logic and the BYPASS function. It is possible to use the 1440 as an automatic corrector, a manual video processing amplifier, or remove it from the program chain through a remote location. Not all of the remote capabilities need be used; in some cases, it may be advantageous to use only one feature, remote adjustment of the preset levels, for example.

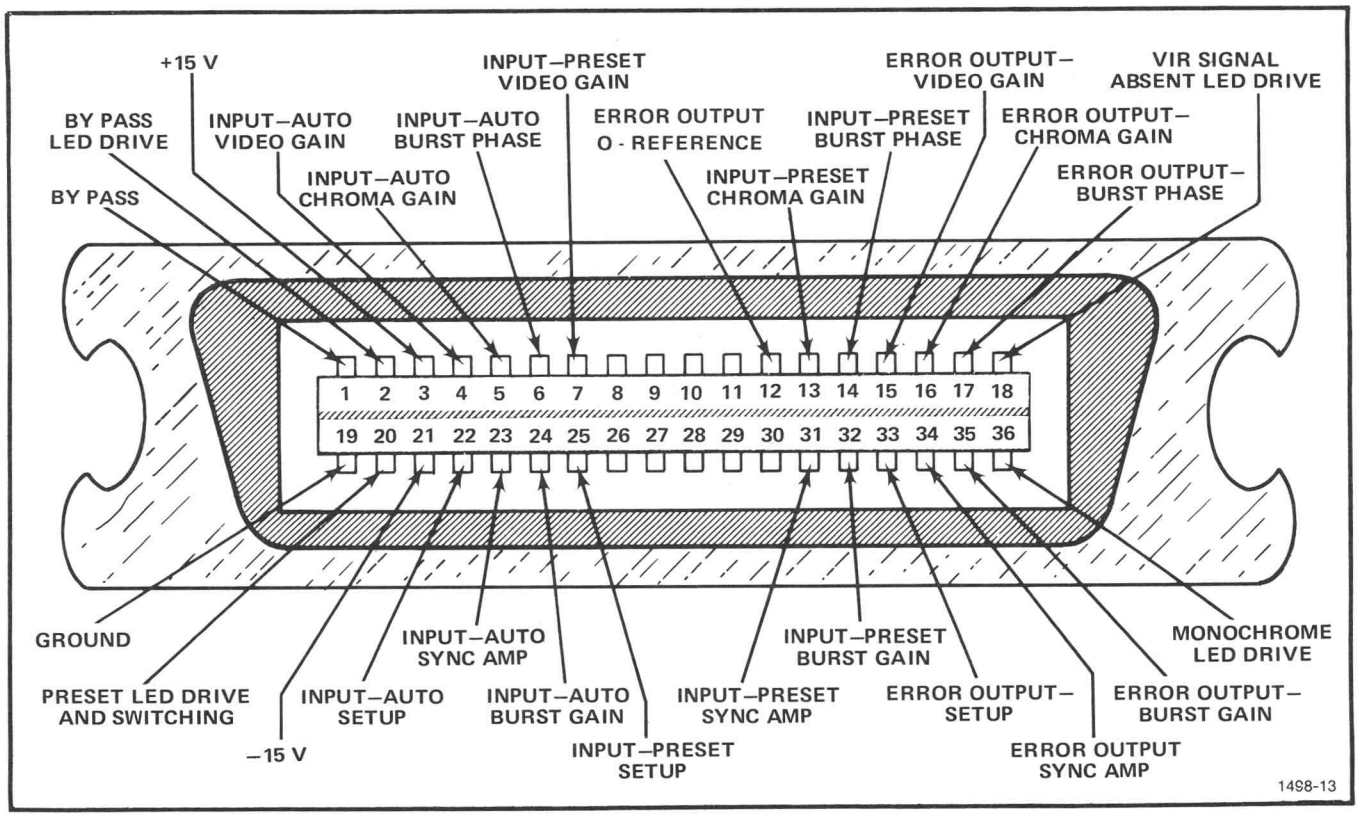

Fig. 1-13. REMOTE plug P9010 functions.

Remote Bypass

One of the most useful functions available to remote location is remote bypassing. All that is required to obtain this function at a remote location is to connect a switch between the remote bypass control line (pin 1 of J9010) and ground (pin 19 of J9010). (See Fig. 1-13.) When the switch is opened, the 1440 will go to BYPASS mode.

It is also possible to add a status indicator to this remote bypass control. Use a Light Emitting Diode (LED), of the same characteristics as the front-panel indicators, between pins 2 and 3 of J9010 (see the Replaceable Electrical Parts list for LED description). The light will actually be an OPERATE indicator, 'on' when the 1440 is correcting, and extinguished when the 1440 is bypassed.

For remote-control applications, the Remote Control Unit, Tektronix Part Number 015-0240-00, is available as a companion unit. This unit includes automatic, preset, and manual adjustments of the six corrected parameters, plus BYPASS and MANUAL switching and status indicators.

Full Remote Control

The 1440 is configured so that the external automatic and preset level corrections supersede the internally-set levels. This allows a remote operator to throw a switch and manually control the 1440 correction levels. The manual controls parallel the remote preset and automatic correction level adjustments, and are brought into play by grounding pin 20 of J9010. It is assumed that most of the time, the 1440 will be operating automatically, but as an added convenience the preset and automatic correction levels can be set at the remote panel.

Setting Up Automatic and Preset Correction Levels

When operated in Remote mode, the automatic and preset correction levels must be set up at the Remote Control Unit front panel. Table 1-2 gives the procedure to

set up the automatic correction levels. To employ the same table for the preset correction levels, ground pin 20 of J9010 (do not switch Remote Control Unit to manual control). All of the adjustments (except Burst Phase) are made with a waveform monitor, through the 1440 PROGRAM MONITOR OUT signal or at the point of correction.

To set up the Burst Phase correction level, use a vectorscope. Fig. 1-14 shows equipment connections for the adjustments. In the precorrection loop, the 1440 output signal reflects the precorrection. The Calibration Procedure in the 015-0240-00 Remote Control Unit instruction manual outlines the proper procedure in more detail.

Table 1-2

REMOTE AUTOMATIC CORRECTION LEVEL ADJUSTMENTS

CONTROL	NOTES
Master Gain	Set for null on waveform monitor, differential operation.
Setup	Set for null on waveform monitor, differential operation.
Chroma Gain	Set for flat bottom 12.5 T pulse on waveform monitor, single channel operation.
Sync Gain	Set for null on waveform monitor, differential operation.
Burst Gain	Set to overlay burst and VIR signal amplitude on vectorscope.
Burst Phase	Set to overlay burst and VIR signal phase on vectorscope.

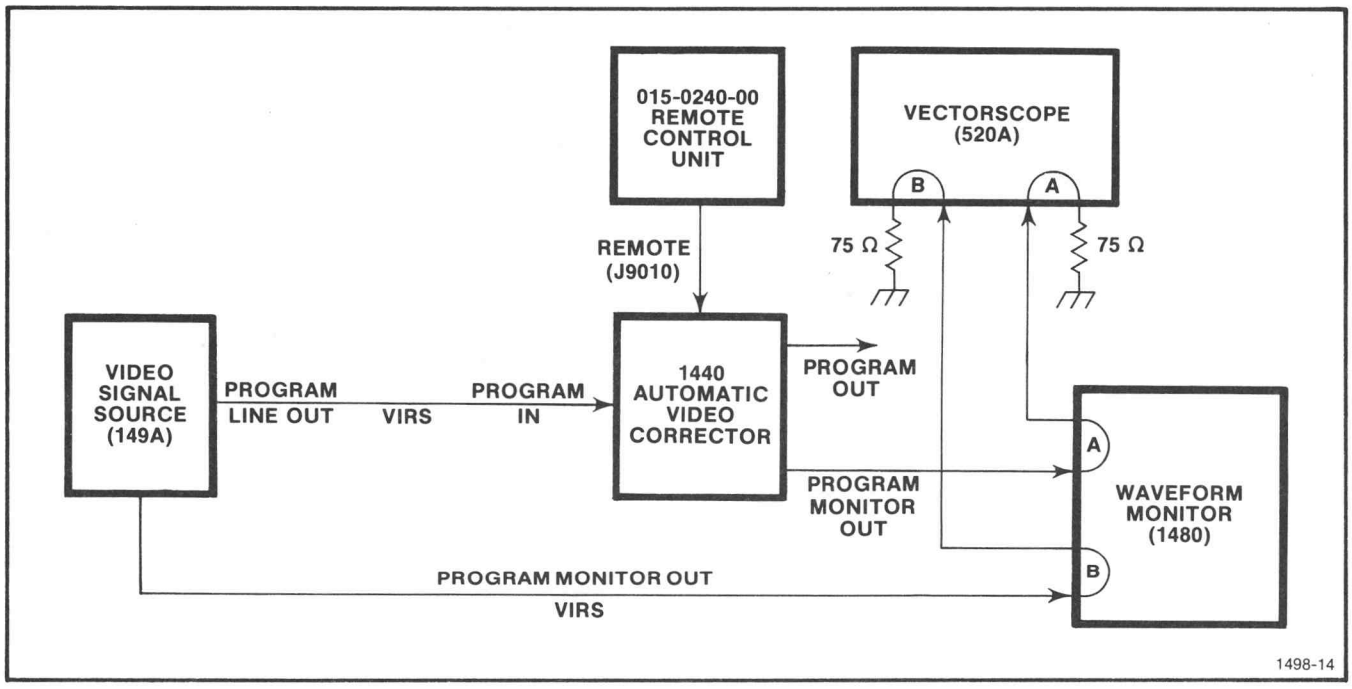

Fig. 1-14. Equipment connections for automatic correction level adjustments.

SPECIFICATION

Performance Conditions

The electrical performance requirements for this instrument are valid over the environmental limits stated at the end of this specification section. Calibration within an ambient temperature range of +20° C to +30° C and a warm-up period of 10 minutes are required prior to achieving stated accuracies.

The electrical characteristics that follow are divided into two categories. Information listed in the Performance Requirement column applies directly to the instrument performance. Information listed in the Supplemental Information column is for clarification and operator convenience. The information given in this column may state typical performance, but is not to be used to specify any performance limits for the instrument. Characteristics listed in the Performance Requirement column are checked by the Performance Check steps (labeled Check —) in the Calibration Procedure (Section 5 of this manual). Any instrument not meeting these performance limits can be brought within the performance requirements by performing the Calibration Procedure (after correcting any faults that may have occurred in the instrument).

Table 1-3

INPUT AND OUTPUT

Characteristics	Performance Requirements	Supplemental Information
Input Impedance	75 ohms, nominal	bnc input
Video Delay	145 ns (operating or bypass)	
Output Impedance	75 ohms, nominal	bnc outputs
Return Loss		
Input		
Operating	46 dB to 5 MHz	
Bypass	40 dB to 5 MHz	
Output	36 dB to 5 MHz	
Program Monitor Out	36 dB to 5 MHz	
External Correction Input	46 dB to 5 MHz	
Front-panel Jacks Input and Output Impedance		Approximately 15 k ohms
External Correction In Input Impedance	75 ohms	
Zero Carrier Reference Drive Output	1 volt into 75 ohms (polarity reversable)	
Program Monitor Out Output Impedance	75 ohms	

Table 1-4

CORRECTION RANGES

Characteristics	Performance Requirements		Supplemental Information
Maximum Correction			Normally provided
Manual or Automatic (VIR Signal Control)	Auto	Manual	
Video Level at Input	±6 dB	±6 dB	
Sync Level at Input	±3 dB	±6 dB	
Chrominance/ Luminance Gain	±3 dB	±3 dB	
Burst Level	±6 dB	±6 dB	
Burst/Chrominance Phase	±25 °	±25°	
Black Level Setup	±10 IRE	±10 IRE	
Zero Carrier Reference	±1.5 dB	±1.5 dB	
Correction Rate	≈0.3 second for 90% correction		
Reduced Correction	Auto	Manual	
Video Level at Input	±2 dB	±2 dB	Internal plug-jumpers are provided to allow these ranges.
Sync Level at Input	±1.5 dB	±3 dB	
Burst Level	±3 dB	±3 dB	
Chrominance/ Luminance Gain	±3 dB	±3 dB	
Burst/Chrominance Phase	±25°	±25°	
Black Level Setup	±10 IRE	±10 IRE	
DC Error Signal Outputs	Video Gain, Sync Gain, Burst Gain, Relative Chrominance Gain, Burst Phase, Setup, and Zero Carrier Offset		For remote metering, telemetry, etc.
Source Impedance	10 k ohms		
Open Circuit Voltage	10 volts		

Table 1-5

CHROMINANCE/LUMINANCE GAIN CORRECTION

Characteristics	Performance Requirements		Supplemental Information
Chrominance/Luminance Gain Correction	+3 dB	−3 dB	
2T Pulse/Bar Ratio	110% max.	92% min.	
T Pulse/Bar Ratio	125% max.	85% min.	
2T Pulse Pre-shoot	5% max.		
Overshoot	5% max.		
T Step Overshoot	5% max.		
T Step Risetime	95 ns min.	155 ns max.	
Chrominance/Luminance Delay	10 ns max.	10 ns max.	

Table 1-6

CLAMPING, NOISE, AND JITTER

Characteristics	Performance Requirements	Supplemental Information
Clamping Characteristics 10-90% APL or 90-10% APL		Recovery within 1 line to within 5 IRE without overshoot. Slow clamp option provided to reduce keyboarding when used with noisy signals.
Hum Reduction	1 volt hum on input signal can be reduced to 25 mV or less.	
Field Time Tilt Correction	25% tilt on input signal will be reduced to 1% or less.	
Video Signal to Random Noise Ratio, unweighted	At least 60 dB to 5 MHz	
Spurious Subcarrier	−60 dB	
Relative Signal Timing Errors		
Sync to Burst	No error	
Burst to Video	No error	
Jitter		
Sync to Video	No error	
Burst	No error	

Table 1-7

LINEAR WAVEFORM DISTORTION

Characteristics	Performance Requirements	Supplemental Information
Field Time	0.5% maximum	Using field-rate square wave measured differentially.
Line Time	0.5% maximum	Using 26 μs bar.
Short Time		
T Pulse/Bar	2% maximum	Measured with chrominance/ luminance gain correction set to zero.
2T Pulse/Bar	1% maximum	

Table 1-8

NON-LINEAR WAVEFORM DISTORTION

Characteristics	Performance Requirements	Supplemental Information
Differential Gain (10-90% APL)	0.5% maximum	Measured at two test signal conditions: (1) +6 dB, video gain at −6 dB; (2) 1V, video gain at 0 dB.
Differential Phase (10-90% APL)	0.5° maximum	
Dynamic Gain (10-90% APL)	Picture: 0.5% max.; Sync: 0.5% max.	
Chrominance /Luminance Intermodulation	0.5% maximum	Measured with 80 IRE subcarrier at 50 IRE pedestal.
Line Time Non-Linearity	0.5% maximum	Measured by differentiating an unmodulated 5-step staircase.

Table 1-9

POWER SUPPLY

Characteristics	Performance Requirements	Supplemental Information
Line Voltage Range		Range selectable by solder connections to transformer taps.
115 Vac	115 Vac ±10%	
230 Vac	230 Vac ±10%	
Line Frequency Range	48 to 66 Hz	
Crest Factor		At least 1.35
Maximum Line Current	0.5 ampere	
Maximum Power Consumption	35 watts	
Fuse Data		
115 Vac Line		0.75 ampere
230 Vac Line		0.5 ampere

Table 1-10

PHYSICAL CHARACTERISTICS

Characteristic	Description
Length	16.220 inches (41.20 cm)
Width	19.000 inches (48.26 cm)
Height	3.470 inches (8.81 cm)
Net Weight	26.690 pounds (7.57 kgm)
Shipping Weight Domestic	24.140 pounds (10.95 kgm)
Export (approx.)	37.000 pounds (16.78 kgm)

Table 1-11

ENVIRONMENTAL CHARACTERISTICS

Characteristics	Performance Requirements
Temperature	
Storage	−40° C to +65° C
Operating	0° C to +50° C
Altitude	
Storage	To 50,000 feet
Operating	To 15,000 feet

GLOSSARY OF TERMS

ACTIVE VIDEO LINES: All video lines not occurring in the vertical blanking interval.

APL: Average picture level. The average signal level, with respect to blanking level, during active picture scanning time, expressed as a percentage of the difference between the blanking and reference white levels.

BACK PORCH: That portion of the composite video signal which lies between the trailing edge of the horizontal sync pulse and the trailing edge of the horizontal blanking pulse.

BLACK BURST: A signal consisting of composite sync and burst. Normally has setup.

BLANKING LEVEL: The level of the front and back porches of the composite video signal. Normally at 0 IRE.

CHROMINANCE: That property of light which produces a sensation of color in the human eye, apart from any variation in luminance that may be present.

COLOR BAR: A test signal typically containing eight basic colors: white, yellow, cyan, green, magenta, red, blue, and black, which is used to check chrominance functions of color television systems.

COLOR BURST: In NTSC color systems, this normally refers to a burst of approximately 8 to 10 cycles of 3.579545 MHz subcarrier frequency on the back porch of the composite video signal, to establish a frequency and phase reference for the chrominance signal.

COLOR SUBCARRIER: In color systems, this is the carrier signal whose modulation sidebands are added to the monochrome signals to convey color information; in NTSC systems, it is a 3.579545 MHz sine wave.

COMPOSITE SYNC: The line and field rate synchronizing pulses (including the field equalizing pulses) when combined together form the composite sync signal.

COMPOSITE VIDEO: For color television, this consists of blanking, field and line rate synchronizing signals, color synchronizing signals (burst), chrominance and luminance picture information. These are all combined to form the complete color video signal.

DIFFERENTIAL GAIN: The difference between: the ratio of the output amplitude of a small, high-frequency sine-wave signal, at two stated levels of a low-frequency signal on which it is superimposed, and unity.

DIFFERENTIAL PHASE: The difference in output phase of a small, high-frequency sine-wave signal, at two stated levels of a low-frequency signal on which it is superimposed.

EIA: An abbreviation for Electronic Industries Association.

EQUALIZING PULSES: Pulses of one-half the width of the horizontal sync pulses, which are transmitted at twice the rate of the horizontal sync pulses during the portions of the vertical blanking interval immediately preceding and following the vertical sync pulses. The purpose of the equalizing pulses is to cause the vertical deflection to start at the same time in each interval, and also serves to keep the horizontal sweep circuits in step during the portions of the vertical blanking interval immediately preceding and following the vertical sync pulse.

FIELD: One-half of a complete picture (or frame) interval, containing all of the odd, or all of the even, lines of the picture.

FIELD BLANKING: Refers to the blanking signals which occur at the end of each field. Also called vertical blanking.

FIELD FREQUENCY: The rate at which one complete field is scanned, normally 59.94 times per second in NTSC systems.

FRAME: One complete picture, consisting of two fields of interlaced scanning lines.

H RATE: The time for scanning one complete line, including trace and retrace. NTSC equals 1/15734 second (color) or 63.56 μs.

IRE: An abbreviation for Institute of Radio Engineers.

IRE SCALE: An oscilloscope scale (graticule scribing) that applies to composite video levels. There are 140 IRE units in 1 volt.

LINE BLANKING: The blanking signal at the end of each scanning line. The signal is used to make the horizontal retrace invisible. Also called horizontal blanking.

LINE FREQUENCY: The number of horizontal scans per second, normally 15,734.26 times per second in NTSC systems.

LUMINANCE: The amount of light intensity, which is perceived by the eye as brightness (referred to as "Y").

NTSC: National Television Systems Committee. An industry-wide engineering group which, during 1950-1953 developed the color television specifications now established in the United States.

PEDESTAL: A luminance level that is algebraically added to the input video signal to correct the setup level. This term is sometimes used synonymously for setup level.

REFERENCE WHITE LEVEL: The level corresponding to the specified maximum excursion of the luminance signal in the white direction.

SETUP: The separation in level between blanking and reference black levels. Normally 7.5 IRE.

STAIRCASE: A video test signal containing several steps at increasing luminance levels. The staircase signal is usually amplitude-modulated by the subcarrier frequency and is useful for checking amplitude and phase linearities in video systems.

SYNC: An abbreviation for the words "synchronization", "synchronizing", etc. Applies to the synchronization signals, or timing pulses which lock the electron beam of the picture monitors in step, both horizontally and vertically, with the electron beam of the pickup tube. The color sync signal (NTSC) is known as the color burst.

VERTICAL BLANKING INTERVAL: The blanking portion at the beginning of each field. It contains the equalizing pulses, the vertical sync pulses, and VITS (if desired). Presently 18 to 21 lines duration.

VERTICAL DRIVE: A pulse at field rate used in television cameras. Its leading edge is coincident with the leading edge of the vertical blanking pulse and its duration may be 10.5 lines.

VERTICAL INTERVAL REFERENCE (VIR) SIGNAL: A signal proposed for use as a reference for amplitude and phase characteristics of a color television program.

VERTICAL INTERVAL TEST (VIT) SIGNAL: A signal which may be included during the vertical blanking interval to permit in-service testing and adjustment of video transmission.

WARNING

THE FOLLOWING SERVICING INSTRUCTIONS ARE FOR USE BY QUALIFIED PERSONNEL ONLY. TO AVOID PERSONAL INJURY, DO NOT PERFORM ANY SERVICING OTHER THAN THAT CONTAINED IN OPERATING INSTRUCTIONS UNLESS YOU ARE QUALIFIED TO DO SO.

PART II

SERVICE INFORMATION

WARNING

THESE SERVICING INSTRUCTIONS ARE FOR USE BY QUALIFIED PERSONNEL ONLY. TO AVOID ELECTRICAL SHOCK, DO NOT PERFORM ANY SERVICING OTHER THAN THAT CONTAINED IN THE OPERATING INSTRUCTIONS UNLESS QUALIFIED TO DO SO.

Section 2—1440

This section of Part II provides information necessary for (1) Installation of the 1440; and (2) Programming details.

INSTALLATION

Packaging

At installation time, save the shipping carton and packing materials for repackaging in case shipment becomes necessary. Refer to Fig. 2-1 for repackaging instructions.

REPACKAGING FOR SHIPMENT

If the Tektronix instrument is to be shipped to a Tektronix Service Center for service or repair, attach a tag showing: owner (with address) and the name of an individual at your firm that can be contacted. Include complete instrument serial number and a description of the service required.

Save and re-use the package in which your instrument was shipped. If the original packaging is unfit for use or not available, repackage the instrument as follows:

Surround the instrument with polyethylene sheeting to protect the finish of the instrument. Obtain a carton of corrugated cardboard of the correct carton strength and having inside dimensions of no less than six inches more than the instrument dimensions. Cushion the instrument by tightly packing three inches of dunnage or urethane foam between carton and instrument, on all sides. Seal carton with shipping tape or industrial stapler.

The carton test strength for your instrument is 275 pounds.

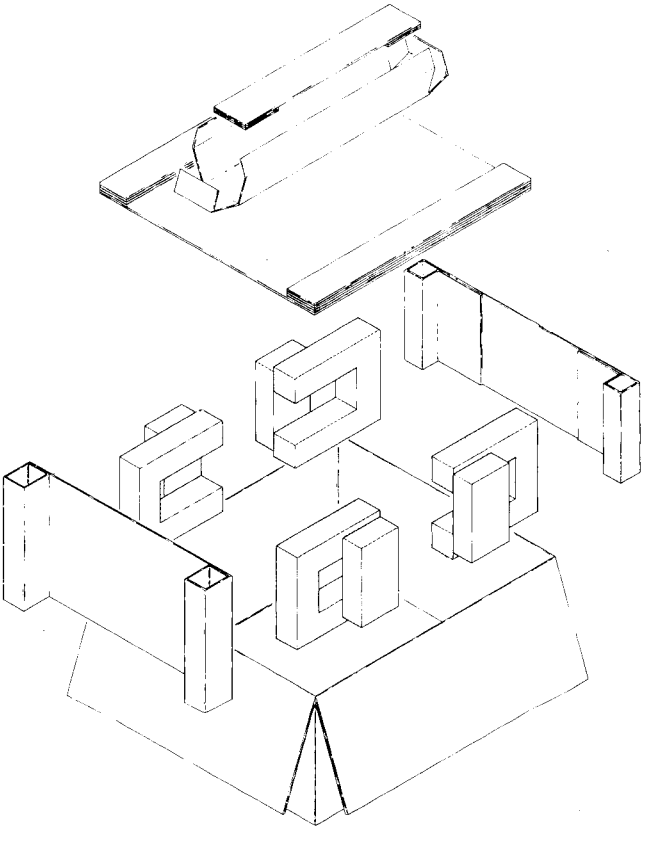

Fig. 2-1. Repackaging the 1440 for shipment.

Electrical

Power Source. This instrument is intended to operate from a single-phase power source having one of its current-carrying conductors at or near earth ground (the neutral conductor). Only the line conductor is fused for over-current protection. Systems that have both current-carrying conductors 'live' with respect to ground (such as phase-to-phase on multi-phase systems) are not recommended power sources.

WARNING

To reduce electrical shock hazard, the instrument must be properly grounded. Use only the three-wire power cord supplied with the instrument.

Table 2-1

POWER CORD CONDUCTOR IDENTIFICATION

Conductor	Color	Alternate Color
Ungrounded (Line)	Brown	Black
Grounded (Neutral)	Blue	White
Grounding (Earthing)	Green-Yellow	Green-Yellow

Line Frequency and Voltage Ranges. The 1440 operates over a frequency range of 48 Hz to 66 Hz and at line voltages of 115 Vac (±10%) or 230 Vac (±10%). The range (115 Vac or 230 Vac) is selectable by solder connections to transformer taps.

Power Line Conversion. Unless otherwise specified, the 1440 was shipped from the factory connected for 115 Vac operation.

To change the 1440 line-voltage operating range, reconfigure the power transformer, T9001, primary connections as shown in Fig. 2-2.

Mechanical

Rackmounting. Graphic instructions for installing the 1440 in an operating rack are included in Fig. 2-3, 2-4, and 2-5.

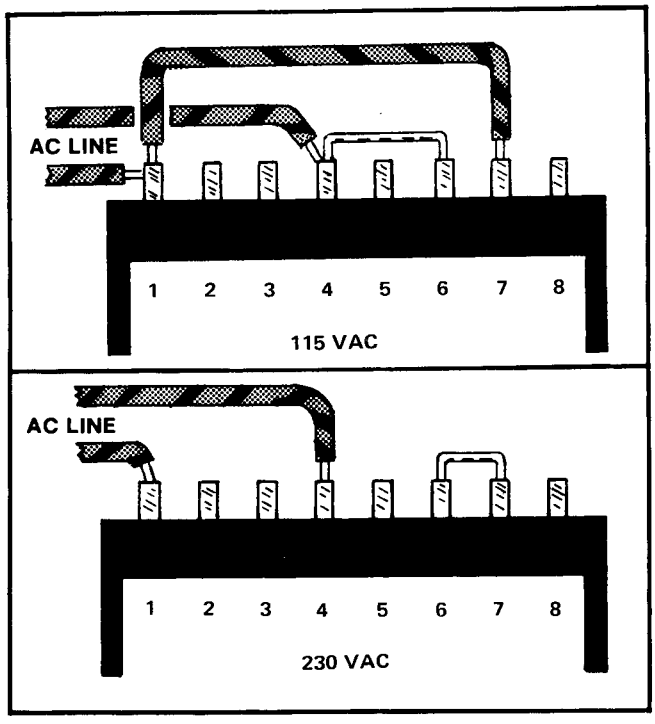

Fig. 2-2. Power transformer primary winding connections.

PROGRAMMING

Programming of the 1440 consists of setting plug-jumpers on the various circuit boards to positions that will enable the use of the 1440 in any of several desired operating conditions.

There are two basic application-modes when using the 1440. (1) Direct Correction. In this mode, the 1440 is connected in series with the video-signal flow path. Connected in this manner, the 1440 will correct for deficiencies in the video system up to the point in the video chain where the 1440 is installed. (2) Precorrection. In the precorrection mode, the 1440 is connected within a feedback loop around one (or more) devices in the video chain; for example, the video transmitter. The video signal is sampled at the output of the device, and (in the case of the video transmitter) coupled through an rf pickoff and a precision demodulator to the 1440 EXTERNAL CORRECTION INPUT. Any necessary corrections are made to the signal, which is then passed on to the transmitter program input.

Different programming is necessary for each of these modes. In addition to programming for either direct or precorrection operation, there are several options available for programming within these modes. These options are described under 'Optional Programming.'

There must be solid contact between the 1440 and its interface to prevent intermittent operation of the bypass relay. To ensure proper fit do not tighten the rear slide track mounting hardware until the 1440 is securely plugged into the interface. Make sure that the 1440 thumb screws, securing it to the rack, are fully tightened before fitting the interface onto the 1440 and tightening the rear slide track mounting hardware.

INSTALLATION IN RACK

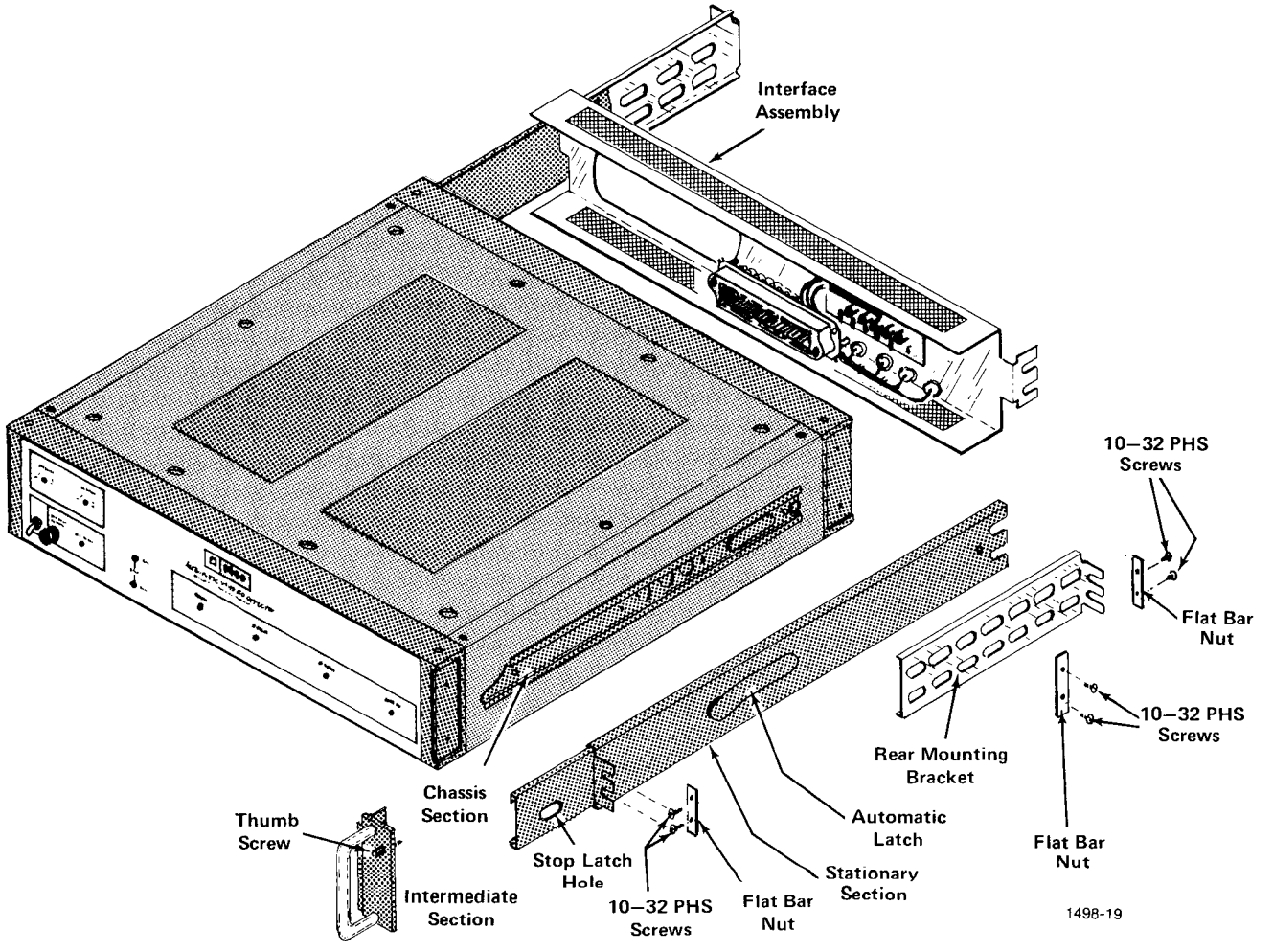

Fig. 2-3. Exploded view of 1440 rackmounting components and Interface assembly.

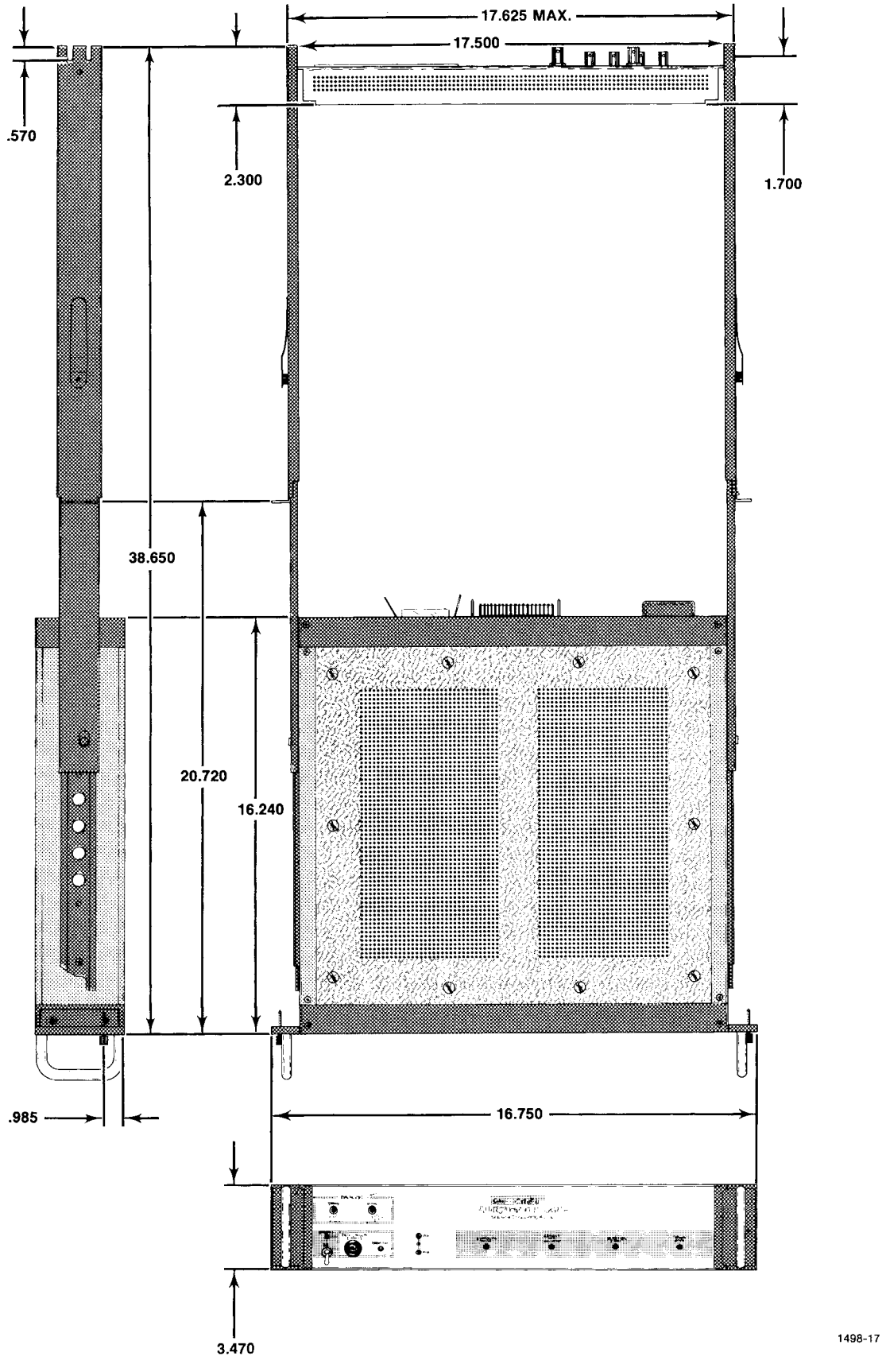

Fig. 2-4. Detailed measurements on 1440 rackmount configuration.

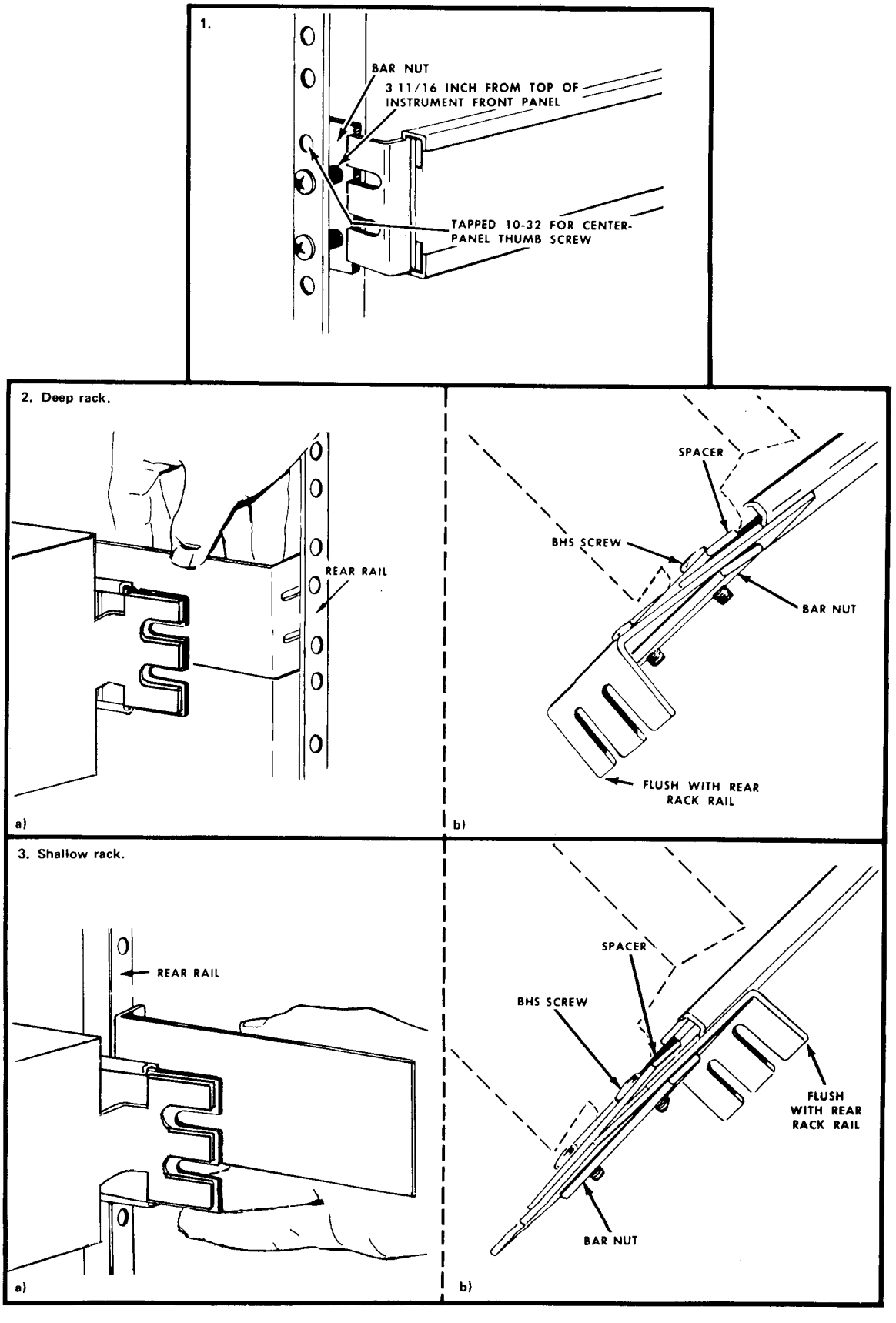

Fig. 2-5. Details for mounting rack rails to rack for 1440.

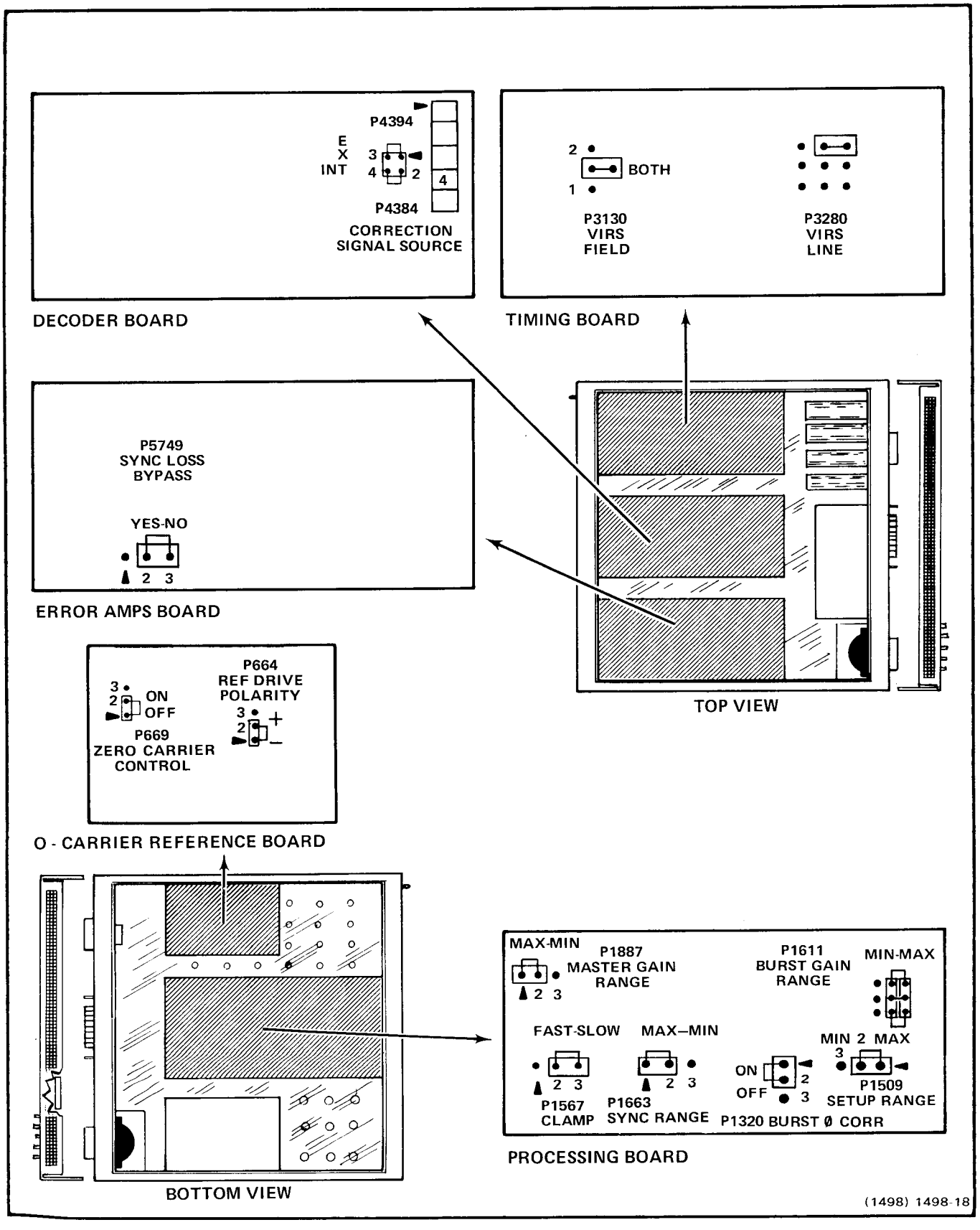

Fig. 2-6. Programming for maximum correction in the direct correction mode.

Programming for Direct Correction

The 1440 is shipped from the factory programmed for maximum corrections in the direct correction mode. To check the programming mode for direct correction, first, disconnect the 1440 from the ac power source. Then, remove the instrument top and bottom covers. Check the plug-jumper locations as shown in Fig. 2-6. The basic plug-jumpers, to set for direct correction, are listed in Table 2-2.

WARNING

With the 1440 top and bottom covers removed, the operator is exposed to electrical shock hazards, mainly the ac line voltage at the power transformer, the line filter, the line fuse, the FUSE OPEN indicator, and the ac power switch. Use caution when working in these areas.

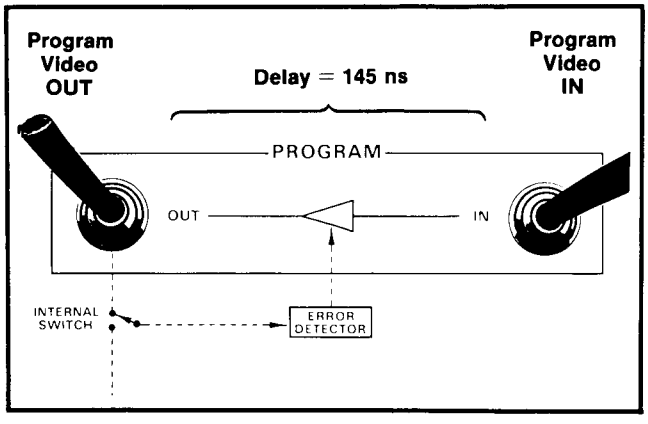

Fig. 2-7. Installing the 1440 in the program line.

Functional Check-Out for Direct Correction Programming

Section 1 (Operating Instructions) in this manual includes a procedure for checking operation in the direct correction mode. The 1440 should be connected in the program line as shown in Fig. 2-7.

Programming for Precorrection Operation

The same plug-jumpers that were set or checked for direct correction are set for precorrection operation. Table 2-3 lists the plug-jumpers and indicates their positions for precorrection operation. Circuit board and plug-jumper locations are shown in Fig. 2-8, 2-9, and 2-10.

Table 2-2

DIRECT CORRECTION PROGRAMMING

Plug	Circuit Board	Positioned For	Result
P3280	Timing	Line 19	Line 19 selected as the reference
P3130	Timing	Both Fields	Both fields selected as the field containing the reference
P4384	Decoder	Int	Reference signal sampled directly from the on-going program video
P664	0-Carrier Reference	Either	No 0-Carrier Reference signal routed to Master Gain circuit
P669	0-Carrier Reference	Off	

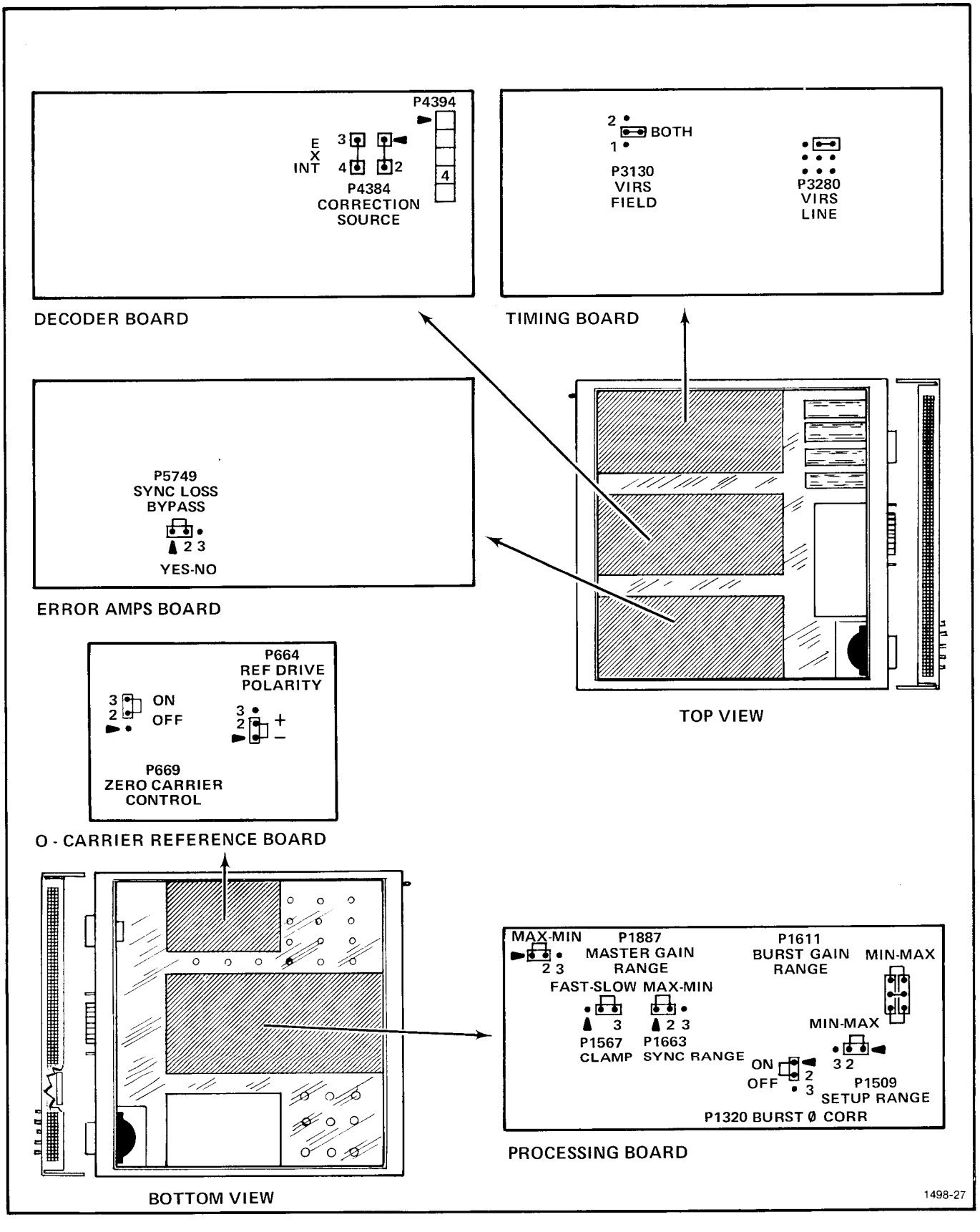

Fig. 2-8. Programming for maximum correction in the precorrection mode.

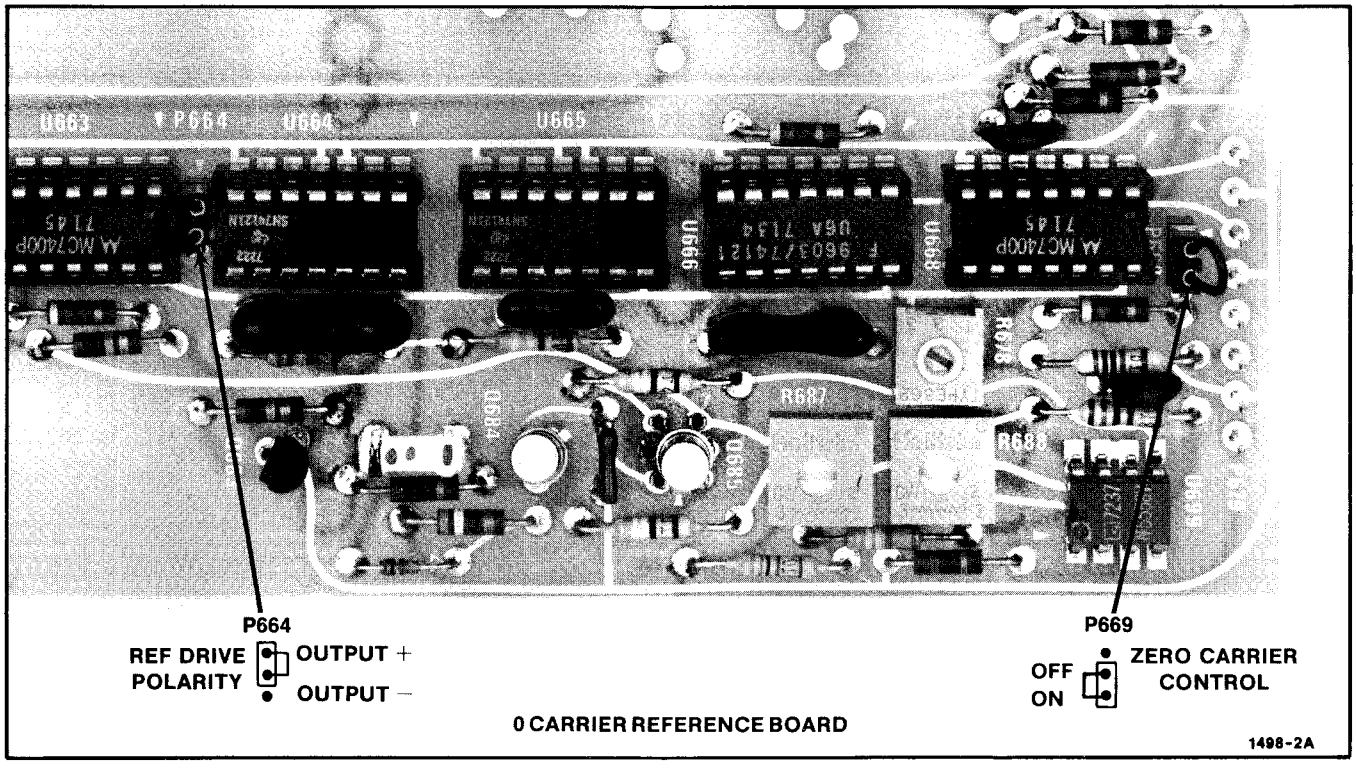

Fig. 2-9. P664 and P669 connected for precorrection operation.

Table 2-3

PRECORRECTION PROGRAMMING

Plug	Circuit Board	Positioned for	Result
P3280	Timing	Line 19	Line 19 selected as the reference
P3130	Timing	Both Fields	Both fields selected as the field containing the reference
P4384	Decoder	Ext	Reference signal must be applied to the EXTERNAL CORRECTION INPUT
P664	0-Carrier Reference	+ or − (depends on demodulator requirements)	Provides correct polarity or reference drive for the demodulator
P669	0-Carrier Reference	ON (used only when precorrections with a a demodulator is employed)	Routes the 0-Carrier Reference amplitude to the Master Gain circuit for comparison

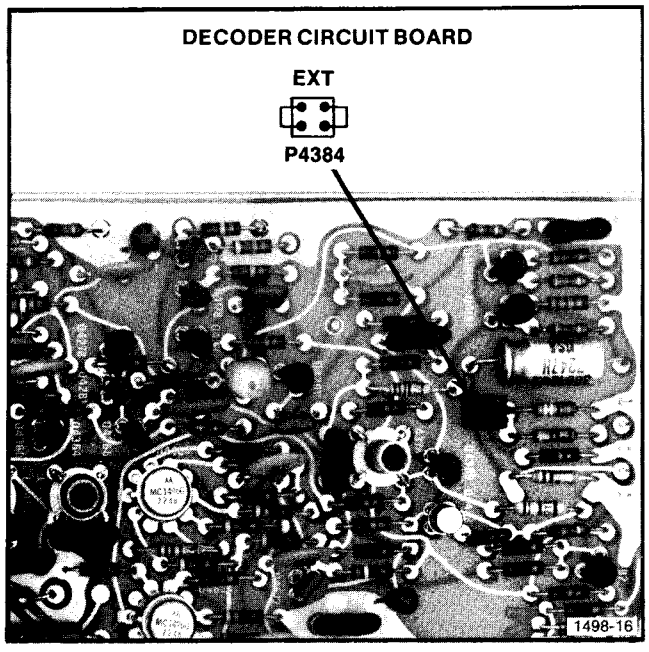

Fig. 2-10. P4384 connected for precorrection operation.

Connecting the 1440 for Precorrection Operation

The equipment connections for precorrection are very different than those for direct correction. Fig. 2-11 shows connections at the 1440 for connecting into the precorrection loop.

OPTIONAL PROGRAMMING

The 1440 Automatic Video Corrector is capable of operating in a number of applications, depending on programming configurations. So far, we have covered the two basic programming modes, direct and precorrection. Whichever of these two modes are selected, there are additional programming selections (within these two modes) that can be set up. These include programming to alter ranges, delete some corrections, change references, and dictate when the 1440 will go into bypass mode.

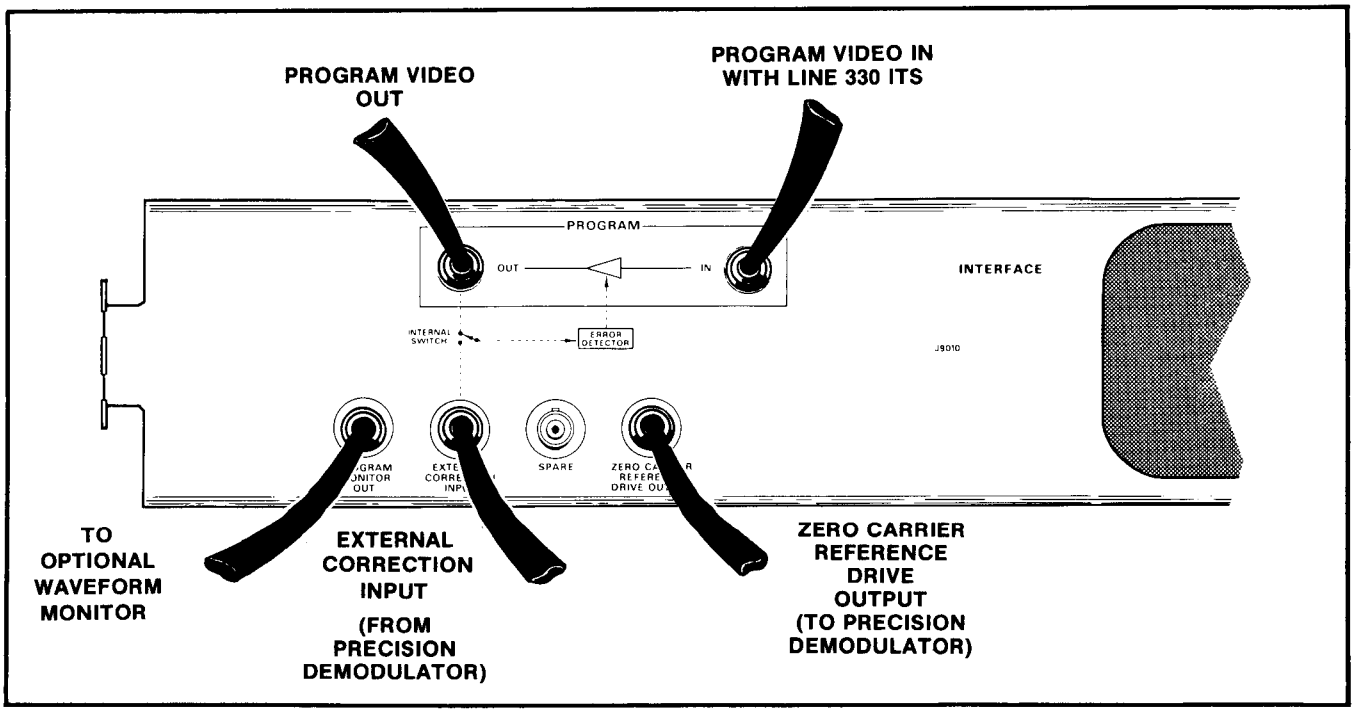

Fig. 2-11. Installing the 1440 in the precorrection loop.

Reduced Correction Ranges

There are times when full correction range for one or more of the corrections may not be desireable. The 1440 is designed with reduced gain available on four of the corrections. It will be necessary to reset Master Gain centering and the Sync Correction Centering if these gain ranges are changed; see the Calibration Procedure in Section 5 of this manual for adjustment procedure. The four parameters that may be programmed for reduced correction range are: (1) Master Gain, (2) Burst Gain, (3) Setup, and (4) Sync Level.

Table 2-4 and Fig. 2-12 show how to reduce the correction ranges. If remote monitoring is being used, the Monitor Range and Centering adjustments will require readjustment; see the REMOTE sub-section in Section 1 for details.

Table 2-4

REDUCED CORRECTION RANGES

Plug Number	Circuit Board	Position	Result	Reset
P1887	Processing	minimum	Master Gain correction ±2 dB	R1875
P1611	Processing	minimum	Burst Gain correction ±3 dB	
P1509	Processing	minimum	Setup correction ±5 IRE	
P1663	Processing	minimum	Sync Level correction ±3 dB	R1858

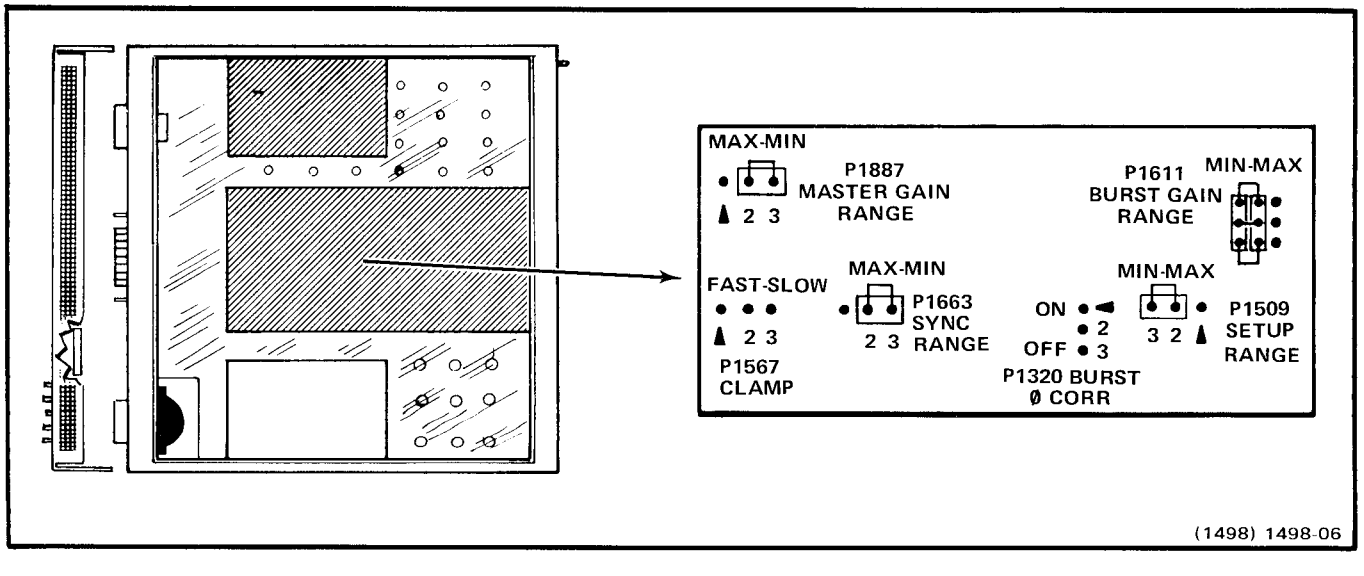

Fig. 2-12. Programming for reduced correction ranges.

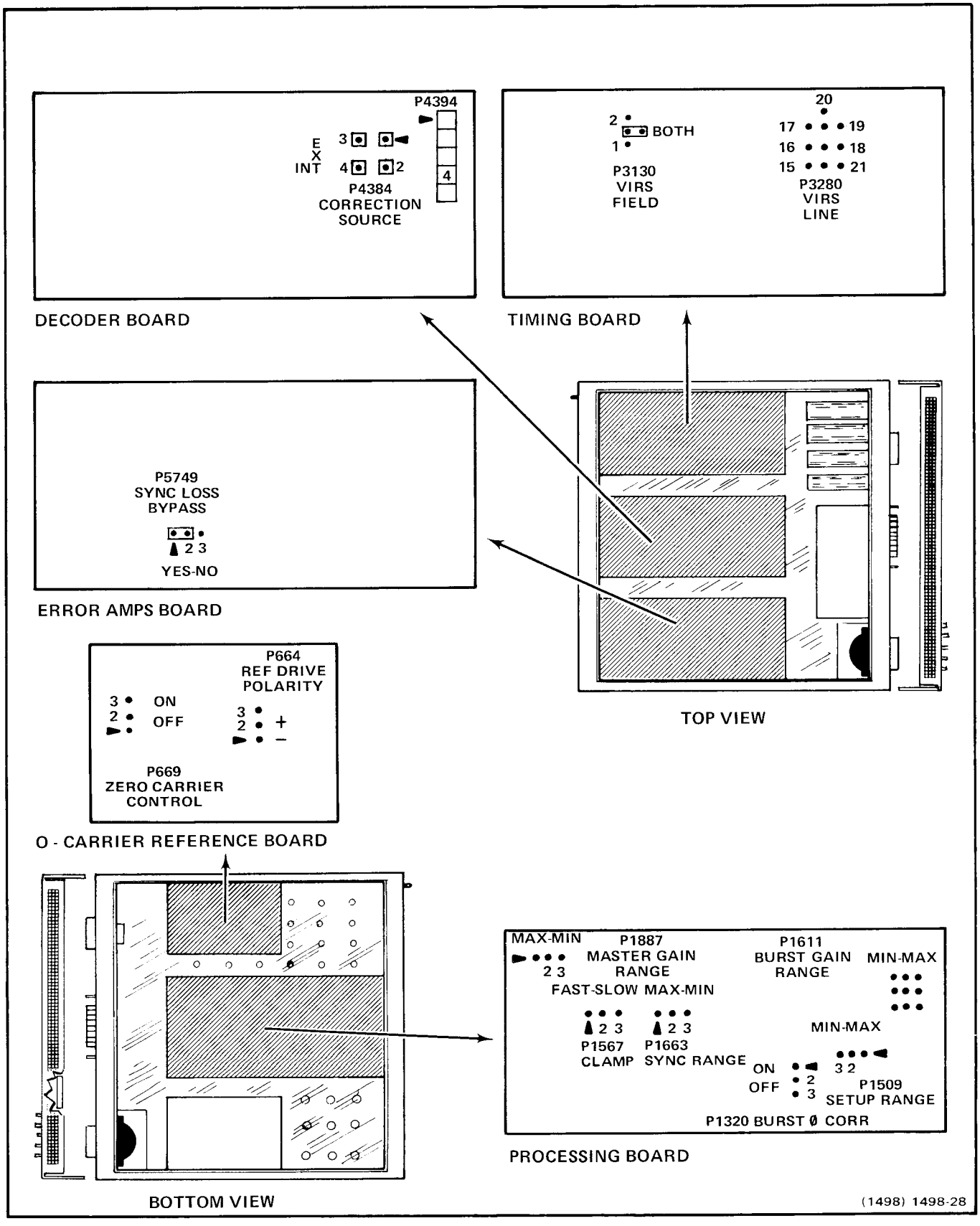

Fig. 2-13. Programming options.

@

OTHER OPERATIONAL CHANGES

Several options are available in the 1440 by use of plug-jumpers on the etched circuit boards. The following explains the plug-jumper options. Fig. 2-13 shows the circuit board and plug-jumper locations.

Sync Loss Bypass

P5749 (Error Amps board) provides the option of switching the 1440 to the bypass mode upon loss of sync, or allowing the signal to pass through the circuitry in the normal manner. This function allows switching between signal sources on the program line, without causing the 1440 to go into the bypass mode. The plug-jumper selections are labeled YES and NO.

VIR Signal Line Selector

P3280 (Timing board) is the VIR signal detector line-selector. This plug-jumper allows any line from line 15 through line 21 to be selected for VIR signal detection. The 1440 is factory-wired to select line 19 for VIRS. The plug-jumper selections are labeled 15 through 21.

VIR Signal Field Selector

P3130 (Timing board) is the VIRS detector field-selector. This plug-jumper allows selection of field one, field two, or both fields for VIR signal detection. The 1440 is factory-wired to select both fields for VIRS. The plug-jumper selections are labeled 1 - BOTH - 2.

Clamp Time

P1567 (Processing board) selects the clamp time-constant. In the normal operating mode, the signal is clamped within one line after a level shift. The other mode clamps within ten lines and is useful in reducing noise-caused keyboarding. The plug-jumper selections are labeled FAST and SLOW.

Burst Phase Correction Disable

As factory-connected, P1320 (Processing board) connects the output of the Chroma Amplitude Compensation stage to the input of the Burst Amplitude Compensation stage, and thence to the Burst Phase Correction stage (see diagram 5, Burst Correction). Burst signals from this circuit correct for phase errors of the output burst. With P1320 moved to its alternate position, the Burst Phase Correction circuit is disabled. The plug-jumper selections are labeled ON and OFF.

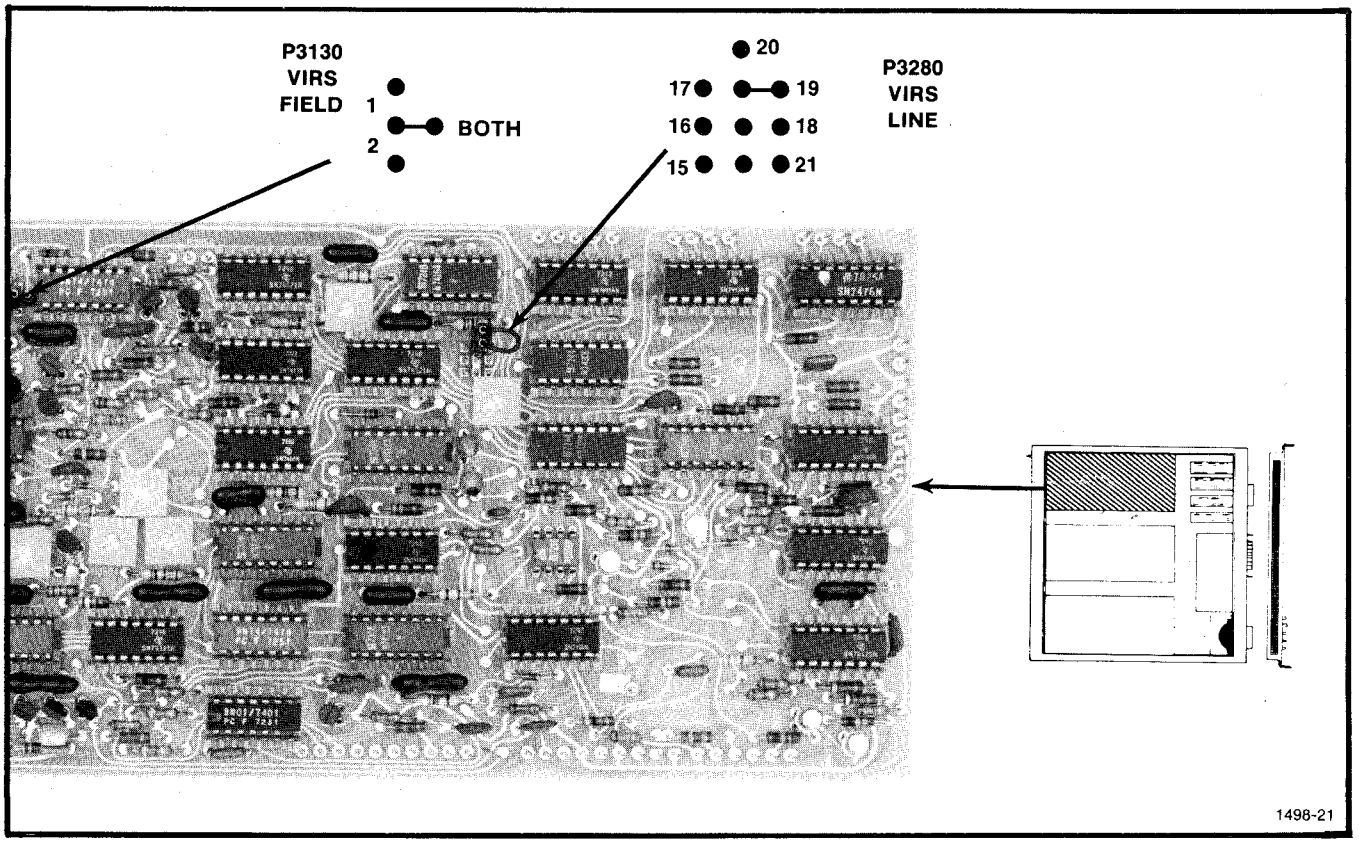

Fig. 2-14. Field and Line Selector locations.

Correction Signal Source

P4384 (Decoder board) selects the signal source for correction. In the normal mode, signals arriving at the PROGRAM IN connector are corrected. With the four-pin jumper rotated 90°, a signal that has gone through another instrument "downstream" of the 1440 can be looped back to the EXTERNAL CORRECTION INPUT. In this mode, the signal from the 1440 PROGRAM OUT changes amplitude to correct for "downstream" signal errors. The plug-jumper selections are labeled INT and EXT.

0-Carrier Sampling

P669 (0-Carrier Reference board) connects the 0-Carrier Sampling circuit to the Master Gain Correction circuit, or grounds this input connection at the Master Gain Correction circuit. The 0-Carrier Sampling circuit should be connected to the Master Gain Correction circuit only if the 1440 is going to be used in the transmitter-demodulator loop (precorrection loop). In all other applications, P669 should disconnect the 0-Carrier Sampling output from the Master Gain Correction input. The plug-jumper selections are labeled ON and OFF.

0-Carrier Pulse Polarity

P664 (0-Carrier Reference board) selects the 0-Carrier Reference Drive pulse-polarity to accommodate various demodulator requirements. The plug-jumper selections are labeled + and −.

CIRCUIT DESCRIPTION

This section of the manual describes the electrical operation of the 1440. The description is organized with respect to the schematic diagrams.

INTERFACE AND RELAY 1

This diagram shows the signal input processing circuits. At the left of the schematic is the input. When the instrument is off, relay K978 is deenergized, routing the signal through the delay line to the output. The 145 ns delay matches the delay of the instrument when operating. Q996 is a relay mode sensor that indicates the relay condition. When the relay is deenergized, the collector of Q996 is at +15 V.

Collector resistor R992 supplies voltage for a remote control unit in-service lamp, through P9010. This lamp comes on only when the collector of Q996 goes to 0 volts. When P999 pin 5 is at +15 volts and pin 3 goes to ground, the relay turns on, which sends the signal through the instrument and causes the collector of Q996 to go to ground. This turns the remote in-service lamp on. CR998 connects to the mode control circuit on Diagram 9. R997 provides input signal to the sync stripper on Diagram 6, even when the 1440 is in the bypass mode.

INPUT AMPLIFIER 2

Master Gain

When the relay is energized, the signal is applied through P1898-2, R1886. From that point the signal goes through R1884 to front panel test point INPUT jack J9220. U1690 is a modified paraphase amplifier. As connected, a positive-going signal at pin 14 causes a positive-going current signal at pin 9. The amount of amplification can be varied by changing the amount of signal going to pin 9 through the "current splitter" portion of the device. The amount of signal current added or subtracted depends upon the voltage applied to pin 12.

R1875 is a gain center control that compensates for variations in different IC's. U1690 pin 10 is a positioning current input. It is driven from U1668A, and adds or subtracts DC current to maintain the signal blanking DC level at 0 volts. U1690 pin 9 is the signal output that drives the delay line driver amplifier. P1887 sets two different ranges of correction. With R1890 in the circuit, the correction range is approximately ± 2 dB. With the resistor shorted, the correction range increases to ± 6 dB. Q1582 is the current source for the IC. Q1486 is temperature compensation for Q1582.

Clamp Gate

The output of the driver amplifier goes through filter L1476-L1478, which removes the burst and subcarrier from the signal, preventing these signal components from affecting the clamping action. U1666A is a buffer for the filter. Q1872 is a driver for the two FET gates, Q1774 and Q1762 on Diagram 4. Q1774 is turned on during back porch time, recognizing the blanking level of the signal.

Clamp level is applied to memory cap C1778, to U1668 (a buffer for the cap), and to a slew-rate limited amplifier, U1668A, which causes any step at the cap to be slowed to one line (if C1572 is not in the circuit), or approximately ten lines (if C1572 is in the circuit). C1572 is selected by jumper P1567. The output of U1668A is fed to pin 10 of U1690, causing the signal at the output of the driver amplifier to be held at zero. C1590 (feedback from the collector of Q1191 to U1690 pin 16) compensates for phase shifts that occur when gain in U1690 changes. C1384 is high-frequency compensation for the delay line driver amplifier.

CHROMA SEPARATOR 3

The Chroma Separator is driven from R1186 on Diagram 2 through P2980-1 to R2990. R2990 is adjusted to match the input impedance of the delay line to its driver.

The delay line is 110 ns long and drives dual transistor Q2580A and B. The base of Q2580A is driven by the input end of the delay line, while Q2580B is driven by the delay line output. The output of Q2580 is maximum when the signals at the input and output of the delay line are 180° apart. For low frequency signals, the output of Q2580 is minimum and increases as frequency increases. At approximately subcarrier frequency, the output of Q2580 will be maximum. This signal drives Q2562, which in turn drives burst amplitude correction circuits on Diagram 5. The delay line output is fed to P1070-1 on Diagram 4. C2790-R2990 is an impedance matching network, adjusted for minimum delay line reflections.

Q2380 has opposite polarity outputs, each driving a diode network arranged as a gain cell. The collector of Q2380A drives a "gain cell" consisting of CR2356, CR2350, and R2354. The junction of R2354 and the two diodes is always at 0.6 V, setting the current through R2354 at 2 mA. As long as the chroma gain control voltage at P2910-5 is above 0 V, the voltage at the junction of CR2230 and R2340 is at +0.6 V and no current flows in R2340 or CR2350. All of the signal current from Q2380A is then routed to ground through CR2356.

If the chroma gain control voltage goes negative, CR2350 assumes some of the current from CR2356. This signal current through CR2350 then becomes correction current to the chroma correction input circuit on Diagram 4.

If the chroma gain control voltage goes positive, CR2350 does not conduct, but opposite polarity signal current flows in CR2352 (output of the gain cell consisting of CR2358, CR2352, and R2360). This signal current then becomes opposite polarity correction current to the chroma correction input circuit.

P2910-5 receives DC information from Chroma Control circuitry shown on Diagram 15. If the voltage at P2910-5 is zero, the gain cell output is zero. The gain cell output at P2920-3 is always the same polarity as that at P2910-5. P2920-3 drives Chroma Correction Input circuitry on Diagram 4.

OUTPUT AMPLIFIER 4

Circuitry on this diagram includes the output amplifier, a clamp, and inputs for Gain Corrected Composite Video, Setup, Sync gain, and chroma.

The Gain Corrected Composite Video goes through the delay line on Diagram 3. It is applied to the base of Q1168 (the input of a non-inverting amplifier) on Diagram 4. Q1168 presents a high impedance to the delay line.

Output Amp

The signal out of Q1164 goes to the input of the output amplifier which consists of Q1452 and Q1642. This output amplifier drives through 75 ohms to the relay contacts and to the program out. It also drives a program monitor output and, through R1850, the front panel output test point, J9225. R1852 and C1850, on the output, is a return loss compensation network.

The output of the chroma separator and gain cells go to P1050-4. When the incoming video signal chrominance is low, the signal from the chrominance separator is positive and adds, making chrominance the right amplitude. If the signal is high, the chrominance coming in at this point is negative, thereby subtracting from the signal. This current goes through Q1340 to the output amplifier.

Q1762, the output level sampler, receives a gate during back porch time, turning it on. The back porch level is applied through slew-rate limited amplifier U1666B, to memory capacitor, C1170, and to Q1164. Q1164 provides negative feedback to the output amplifier and moves the output back to zero volts.

Sync Gain

The output of the delay line driver amplifier also goes to Q1471. This is a gate for sync, which receives its drive from Q1760. L1560, C1564, and C1462 is a delay matching network with approximately the same delay as the delay line on Diagram 3. The sync signal appears at pin 14 of U1360. If incoming sync is correct, pin 12 is at ground. If the sync on the incoming signal is low, the output signal, due to pin 12 changing, is positive and adds to the sync. If the sync coming into the instrument is high, U1360 pin 8 is negative and subtracts from the sync. U1360 pin 8 drives sync correction current through Q1260, a non-inverting amplifier, to the output amplifier. R1858 is a gain center control and can be adjusted to compensate for differences in IC's. P1663 allows for two correction ranges on the sync signal.

Setup

Setup amplitude errors are corrected by adding plus or minus compensation current from R1500 or R1210, respectively. This is gated on during the setup time. Q1212 and CR1202-CR1204 form a current switch that enables setup drive —, during the pedestal portion of a video line. CR1206 enables setup drive +, during the same time. The current is controlled from the setup correction drive circuit on Diagram 15, through P1200-9. The two currents are normally equal in amplitude if the voltage at P1200-9 is zero. If the voltage at P1200-9 goes negative, this unbalances the currents and causes a positive pedestal to be applied to the output. If the voltage at P1200-9 goes positive, this unbalances the currents in the opposite direction and causes a pedestal to go negative, subtracting from the setup. This current goes through a risetime limiting filter, then through a setup range selector P1509 to the output amplifier.

BURST CORRECTION 5

Burst Amplitude Compensation

P1050-6 is driven by chroma from Diagram 3. Q1234 is normally on, shorting the signal through C1232 to ground. The burst gate at P1020-3 turns Q1234 off during burst time so that the signal at the emitter of Q1316 will be burst signal only. The gain cell CR1330 and CR1332 compensates for the amount of chrominance correction. The burst signal then goes through Q1232. Q1315 is the emitter follower driving Q1702 and Q1718 At the collector of Q1718, the burst is in phase; at the collector of Q1702, the burst is out of phase. These go through two gain cells that operate the same way as those in the chrominance channel.

Burst Phase

The signal from Q1315 also goes to Q1434 and another gain cell, which compensates for burst amplitude correction. At TP1624, then, there will be a burst signal, which compares in amplitude to the burst going out of the output amplifier. This point drives two phase shift networks.

C1636, L1632, and C1742 shift the burst phase by −100°, while C1622, L1628, and C1724 shift the burst phase by +100°. The phase shift networks drive gain cells similar to those on Diagram 3. A burst phase control voltage is applied to the gain cells from burst phase correction drive on Diagram 14, through P1930-1. When the burst phase control is positive, −100° burst is passed. When the burst phase control is negative, the +100° burst is passed.

The burst phase correction (+100°, −100°, or 0) is routed through Q1536 to the output amplifier on Diagram 4, where it combines vectorially with incoming burst, the resultant being shifted in phase by the amplitude of the correction signal.

If the burst phase control voltage is zero, the output of the two gain cells is zero, providing no correction to incoming burst.

P1611 provides two different ranges of burst amplitude correction. The currents from the gain cells in the burst phase amplitude correction circuit go through Q1536 to the output amplifier.

SYNC STRIPPER 6

This circuit removes sync from the externally applied composite video signal. Processing of the composite sync eliminates degradation such as the white noise, 60 Hz hum, etc. Composite sync processing is accomplished by clamping the sync tip of the externally applied video to a predetermined level, and adjusting the blanking level by controlling the overall circuit gain. (See Fig. 3-1).

Composite video is applied through P3600-1 to the input operational amplifier (Q3606, Q3610, Q3616). C3502 and L3500 provide a low impedance to ground for chrominance signals.

Q3610 inverts the input signal and drives summing amplifier Q3722. The feedback loop around Q3606 and Q3610 is a low pass filter (C3512 and Q3616), which provides negative feedback to 60 Hz signals, effectively reducing 60 Hz hum.

R3514 and C3510 form a high pass filter that changes the gain of the summing amplifier from 1 at very low frequencies to 3 above approximately 200 Hz. This allows faster recovery of the sync tip level.

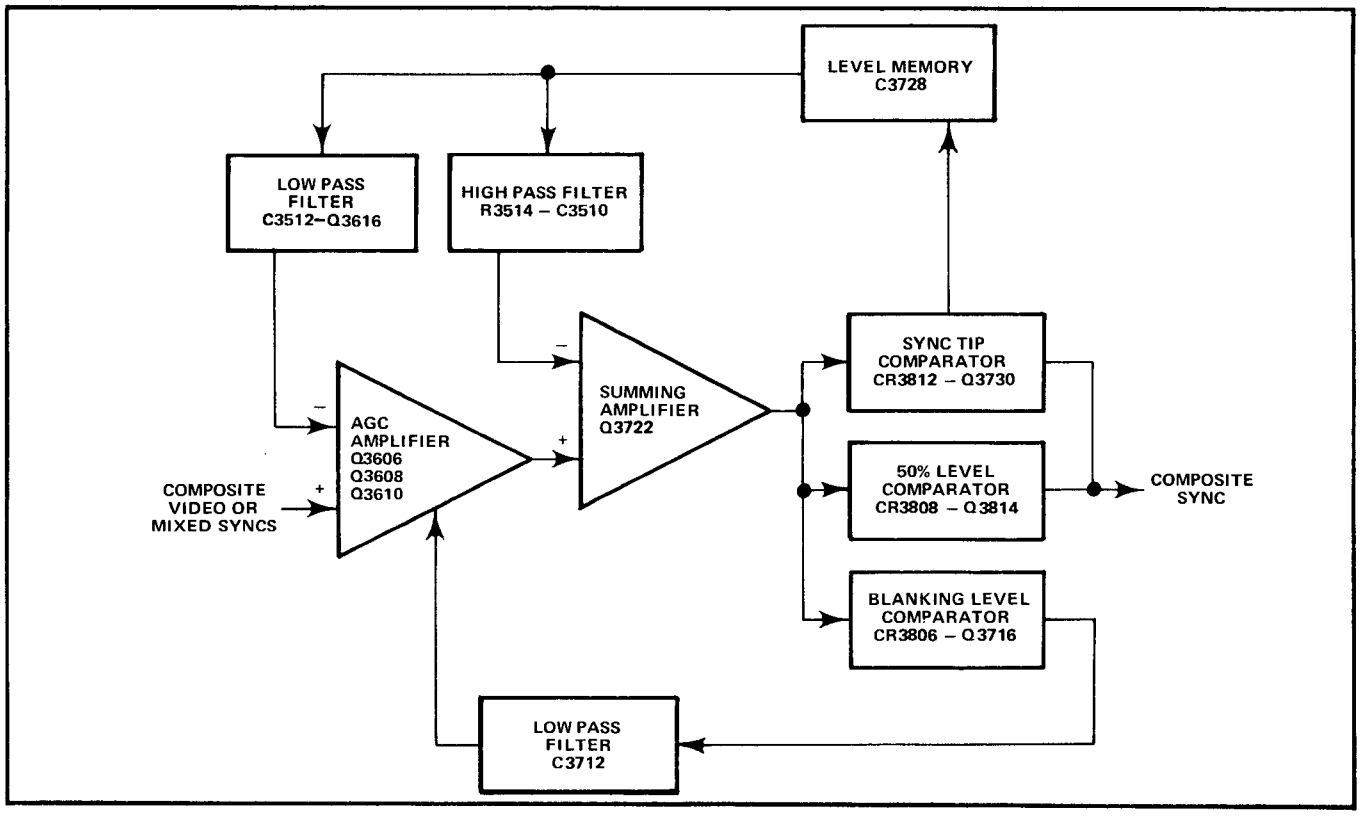

Fig. 3-1. Block diagram of the Sync Stripper circuit.

Summing amplifier Q3722 drives emitter follower Q3724 with inverted video (sync positive). Q3724 drives three comparators. (Blanking Level, CR3806-Q3716; Sync 50% Level, CR3808-Q3814; Sync Tip CR3812-Q3720). During active video time, the diodes in the three comparators are conducting.

When the positive-going sync pulse at the emitter of Q3724 rises past the anode of CR3812, the Sync Tip Comparator switches, clamping the sync tip at that point. Collector current in Q3730 charges Sync Tip Level Memory capacitor C3732. The stored charge on C3732 is applied through emitter follower Q3726 to summing amplifier Q3722, which demands more or less current from the input amplifier, setting the level at the emitter of Q3724. The Sync Tip Comparator is rate limited by C3732 so that impulses will not shift the sync tip level.

Any sync tip tilt present on incoming video is eliminated as soon as the Sync Tip Comparator switches, because the sync regeneration that takes place at the collector of Q3816 is isolated from the incoming video by the comparator.

CR3822 provides some current during sync time, allowing C3732 to slew negative if the sync tip is not far enough positive to turn CR3812 off.

The Sync 50% Level Comparator switches at the half-amplitude point of the sync pulse at the emitter of Q3724. Collector current in Q3814 causes Q3816 to saturate, producing a 5 V pulse at the collector of Q3816 of the same width and polarity as incoming sync. This stripped sync pulse drives the Square Wave Shaper on Diagram 7, the Vertical Integrator on Diagram 8, and timing circuits in the Correction Logic on Diagram 9. The pulse also gates CR3822 on, to provide current to the Sync Tip Comparator during sync time. CR3912 catches the sync output level at +5 V during non-sync time. (When Q3816 is off.)

The Blanking Level Comparator is biased to switch about half way between the setup level and the blanking level. This comparator provides gain drive for the total circuit, determined by the length of time that it charges C3712 (see Fig. 3-2).

The charge on C3712 sets the bias on the base of Q3608, the AGC control. Q3608 carries part of the collector current for Q3606; the other part of this current is base current for Q3610.

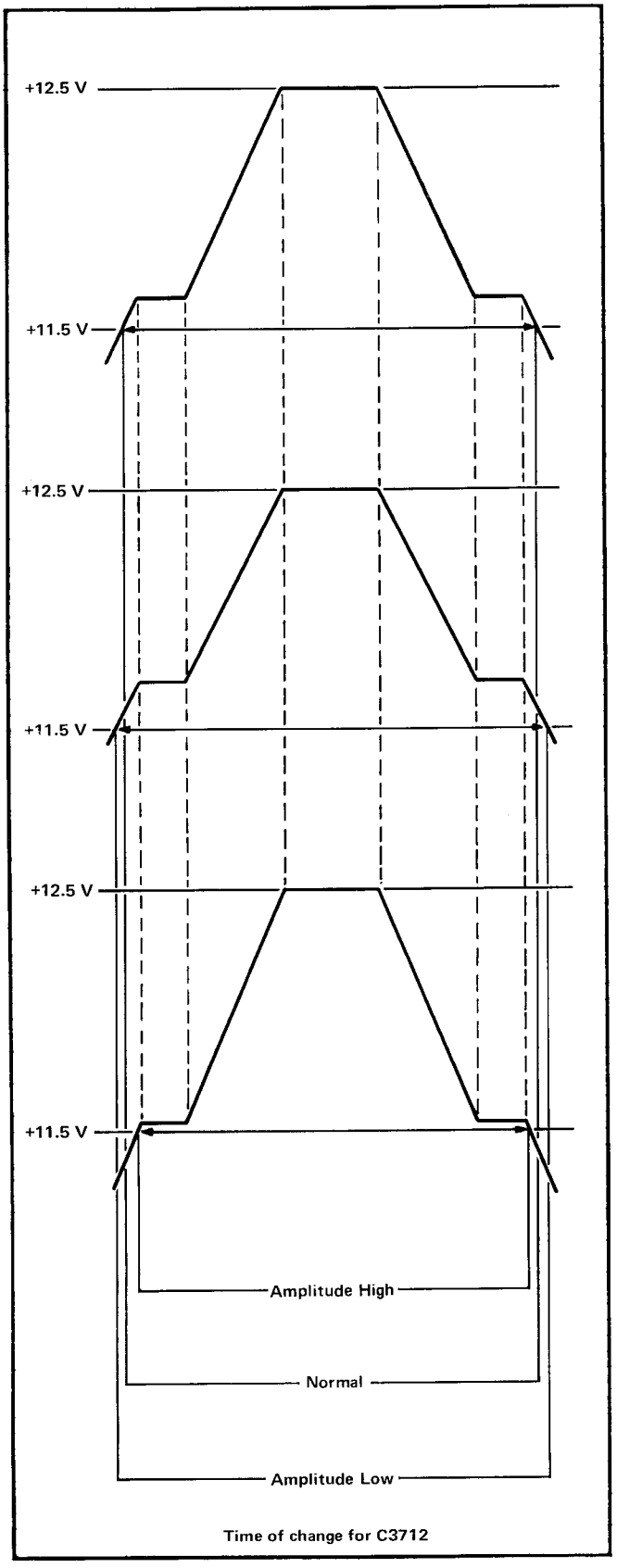

Fig. 3-2. Q3716 conduction time.

If the input signal amplitude to the Sync Stripper is low, the Blanking Level Comparator switches at a point closer black than to blanking. As a result, Q3716 conducts for a longer period of time than it would if the input were correct. The longer period of conduction charges C3712 more positive, decreasing current through Q3608. This forces more base current in Q3610, increasing circuit gain. If the input signal amplitude is high, the opposte condition prevails.

Q3714 and Q3718 provide quick-charge current for C3712.

Q3720 and Q3700 are part of a loop used to detect an over-white condition, such as might exist if a double VIR Signal were applied to the PROGRAM IN connector. This circuit is active only when the 1440 is in the Auto mode. At that time, U3570 pin 1 on Diagram 9 is at −15 V. If an over-white condition arises, Q3720 will turn on, causing the collector of Q3700 to go to +15 V. The ultimate effect is to switch U3570 pin 1 to +15 V, switching the 1440 to the Manual mode, and applying a slightly more positive bias to the base of Q3720. This action prevents the 1440 from over-correcting video amplitudes. Feeding back to Q3720 prevents the 1440 from switching back and forth between Manual and Auto modes.

The sync stripper output goes to the Sync Lock circuit on Diagram 7.

HORIZONTAL COUNTER 7

Sync Lock

The output of the sync stripper, through differentiator C3742-R3738 (Diagram 6), provides a negative-going pulse at the start of sync, driving one-shot U3330A. When the leading edge of sync triggers U3330A, pin 4 feeds back through R3426 and C3420, holding U3330A so that it will not accept other triggers until the time constant is past. The time constant is approximately 60 μs (adjustable by R3624) eliminating most of the noise pulses that could occur during the line. It also eliminates the equalizing pulses and serrations during the vertical interval, because they are not at a line rate. U3330A, pin 13, goes to U3330B pin 10, triggering this one-shot. The one-shot has a time constant of approximately 32 μs. Pin 5 of U3330B, then, is a square wave that drives a miller integrator circuit, that in turn integrates the leading and trailing edges of the square wave into 2 μs ramps. Q3226 is a sampling gate that is turned on at the center of the ramp for approximately 200 ns. It puts the level of the ramp on the storage cap C3232. From this capacitor is a buffer amplifier, U3310B, that drives through R3222 to U3310A. In the normal mode of operation, the input resistance to the slew-rate limited amplifier (U3310A) is 62 kΩ. If the signal becomes unlocked, Q3240 turns off, turning on Q3320. The input resistor then becomes 1 kΩ in parallel with 62 kΩ, speeding up the lock of the 1440 by increasing the slew-rate of the amplifier.

The voltage at pin 1 of U3310A controls the capacitance of CR3410 and therefore the frequency of oscillator Q3204-Q3202. The coil, L3400, is adjusted so that the voltage at TP3308 is at zero volts. The frequency of the oscillator is four times the line rate. This output then goes to divide-by-four counter U3100. The output of Q3100 goes to a one-shot, U3102A. The one-shot time is from end of horizontal blanking to the start of sync.

The PEDESTAL DELAY control, on the front panel, sets the timing of the sample gate, changing the position of the pedestal on the incoming video signal with respect to horizontal sync.

The one-shot (U3102A) then drives another one-shot (U3102B), which delays that time to approximately the mid point of the ramp at Q3244. The output of the one-shot (U3102B) goes to RC network C3020 and R3022 to give approximately a 200 ns turn-on time for Q3226. If this is not turned on at the right time, the output of the Horizontal Integrator will be either positive or negative, causing the frequency of the oscillator to change to bring it into lock. If there is no incoming sync to U3330A, pin 4 is positive, turning on Q3224 so that a missing sync pulse does not cause the amplifier to slew off; instead, it retains the information that it had before.

Sync Lock Detector

U3134B is part of the sync lock detector. The sync signal is applied to pin 10, which presets pin 8 low. If the oscillator has been locked to the proper point, one microsecond later a pulse arrives at the clock point, resetting pin 8 high. The output goes to comparator Q3142-Q3144. If pin 8 of U3134B stays negative long enough to cause Q3142 to turn off, the current starts to flow through Q3144 and through miller integrator cap, C3256. If the sync is far enough off, the cap charges far enough positive that Schmitt circuit U3272A switches. When the oscillator has regained lock, the charging current through R3146 causes the voltage on the input to U3272A to charge slowly negative, switching U3272A back. Pin 6 of U3732A goes to pin 2 of D flipflop U3134A. Sync is coming into the clock, so that even though the sync detector indicates an unlocked condition, if there is no sync coming in, the output of the D flipflop will indicate that lock has been retained. Pin 6 of U3134A drives sync loss detector U3360A, to be discussed later.

VERTICAL COUNTER 8

The vertical counter is set to count from 1 to 525. It is preset to a count of 12 by a vertical sync pulse from U3768A; the output of the vertical integrator.

The vertical integrator is driven by stripped sync from Diagram 6, and produces a ramp from the vertical serrations that is peak-detected and applied to U3190 pins 2 and 7. The vertical integrator consists of Q3832, Q3834, Q3838, and Q3840. On the last vertical serration pulse, Q3840 is turned on, producing the pulse that presets the vertical counter.

The vertical counter receives drive at twice-line-rate from U3100A pin 6 on Diagram 7, and counts from line 1 to line 525. At that time U3284B senses all four inputs high and resets the counter to 0. U3128B is reset at count 0 and starts the vertical blanking interval. The vertical blanking interval is ended by line 16 from the Line Counter, U3160.

U3160, an eight-bit-shift register, receives input from the vertical counter at line 14. It is then clocked at the beginning of each horizontal sync pulse by an output of U3102B on Diagram 7. The Line Counter outputs are lines 15 through 21 and are used to drive the VIR Signal Detector on Diagram 10. Pin 2 of U3160 is driven by vertical blanking to gate out any signals arriving at pin 1 of U3160 that do not fall during the vertical interval.

The Field Detector (U3128A) detects the horizontal counter voltage level at the start of vertical blanking. During one field the level will be high; during the other, low. The Field Detector output is used to gate the VIR Signal Detector for either or both fields.

Setup Timing

U3150 is the setup timing IC. Setup blanking is started at the start of blanking by a pulse from pin 9 of U3100B on Diagram 7 to pin 5 of U3150. During the time one-shot U3150 is on, (the time is adjustable by the front panel PEDESTAL START control) there is no setup pedestal added. The pulse from U3150 pin 1 goes to pin 13 of U3370B. U3370B pin 12 is gated with vertical blanking so that no setup will be added during vertical blanking time. The setup amplifier on Diagram 4 requires both positive- and negative-going signals at the same time, therefore inverter U3768B produces the required opposite polarity signal at P3986-9 to drive the setup amplifier on Diagram 4.

Sync Gate

U3150 also drives Sync gate U3780. This allows the one-shot time constant to be set so that the gating starts slightly before sync and is ended by sync through inverter U3590C. R-S flipflop U3390B&C generates horizontal sync gate timing. This drives pin 12 of U3390D. U3390D pin 13 is sync gate timing for equalizing pulses and vertical serrations, enabled by U3380A&C. U3380A&C is set at the start of vertical blanking through pin 13, and reset at line 9 1/2 through pin 5. U3380A&C pin 3 is a clear input that only operates when the 1440 loses sync lock and U3134A pin 5, on Diagram 7, goes negative. This ensures correct timing of the sync gate, if, for some reason, the 1440 is not locked to the incoming signal. The output of U3380A&C is a vertical rate, so that sync is gated off during the time of the equalizing pulses and vertical serrations. At U3390D pin 11, the sync is gated during the main part of the picture, then continuously during the vertical interval, from start of blanking through line 9 1/2. The output of P3399-4 drives sync gain circuits on Diagram 4.

CORRECTION LOGIC 9

Sync Loss Detector

U3360B (retriggerable one-shot) detects either no incoming sync, or that the instrument is unlocked from the sync signal. It is triggered through pin 10 by the vertical sync. If U3360B loses vertical sync, or if the signal on pin 9 is missing, pin 5 goes negative after the one-shot time constant, driving U3272B and switching the instrument to the Manual mode. The signal from pin 5 is also applied through R3291 to P5749 on Diagram 14, which selects either bypass or non-bypass modes of operation.

Clamp Pulse and Burst Gate

The sync lost gate goes to clamp pulse generating one-shot U3276 to switch from the internal oscillator to the incoming sync to generate the clamp, i.e., if the 4H oscillator (on Diagram 7) unlocks, the incoming sync will then drive the clamp pulse timing generator. One-shot U3276 generates a pulse extending from the start of sync to a little past the end of burst. This goes to U3370A pin 4 and is gated along with sync so that there is a pulse at pin 6 of U3370A extending from the end of sync to a little past the end of burst. This is used for the burst gate on Diagram 5. U3370A also has an input from Diagram 12 through inverter U3562C, to pin 2, indicating presence or absence of burst. If there is no burst, there will be no gating of burst on Diagram 5. The output of U3276 also drives U3768C pin 10 along with sync to generate a pulse at pin 8 much the same as pin 6 of U3370A. The start of this pulse is delayed by C3880 and used to drive the signal clamp on Diagram 2.

Manual and Auto

The output of U3272B drives Q3580, which has an output that goes to the remote control. This can drive a light, or it can also be an input. If this input is grounded it will switch the 1440 to the Manual mode. The transistor

also drives the MANUAL indicator on the instrument itself. CR3590 keeps the input of U3390A (pins 1 and 2) from going above +5 volts.

If the output of U3390A goes positive, it pulls positive on both operational amplifiers (U3570A and B) so that both outputs go positive. U3570B controls the burst amplitude and burst phase modes. U3570A controls sync gain, master gain, setup, and chroma amplitude modes. P3986-8 is the burst present input from Diagram 12. If the level at P3986-8 goes positive, pin 7 of U3570B will go positive, switching burst phase and burst gain corrections to Manual mode. P3986-8 also drives U3590 pin 2. U3590 pin 1 receives bypass information from the remote connector through Q3576, disabling the MONOCHROME LED. The output, pin 3, indicates monochrome operating mode. This drives the MONOCHROME indicator on the instrument through R3690. It also drives an inverter that drives, through the remote connector, a monochrome light on the remote unit. P3986-8 also drives an inverter (U3562C pins 9 and 10). The output of U3562C (pin 8) goes to transistor Q3996. This transistor gates the meter drive circuitry for burst phase and burst gain to zero, when in monochrome or bypass. P3960-9 is an output from the sync detector on Diagram 11. This switches the instrument into the Manual mode if no sync is coming from the sync detector. CR3278 is the input from the VIRS absent detector on Diagram 10. If the VIR Signal is not present, pins 9 and 12 of U3272B will go negative, switching the 1440 to preset. CR3274 performs the same function in bypass mode.

VIRS SAMPLING TIMING (10)

VIRS Detector and sampling timing R-S flipflop U3850A and D receives line counter information from U3350B on Diagram 8. This allows one-shot U3750A to be triggered by the sync signal from Diagram 11 through P3912-1. The output of U3750A feeds back to pin 11 of R-S flipflop, U3850A and D, and resets it. The one-shot time constant allows approximately 14 microseconds from the leading edge of sync to where the detection of the VIR Signal will occur. After this 14 microseconds the three one-shots (U3750B, U3756 and U3550B) are started. U3750B runs until just before the end of the burst of the VIR Signal. U3756 runs until just before the end of the luminance, or 50 IRE, pedestal. The output of U3550A is approximately 2 microseconds long. At the end of this 2 microseconds, it clocks U3762B, causing pin 9 to go positive. This drives pin 13 of U3562D. If U3562D pin 12 is positive, pin 11 will go negative and start the sampling of the burst amplitude on the VIR Signal.

P3960-8 has chroma detector information from Diagram 12, and drives pin 9 of U3850C. When both pin 8 and pin 9 of U3850C are positive, pin 10 is negative, shutting the VIR Signal chroma sampling off. When U3850C pin 9 goes positive it is an indication that VIR Signal chrominance is lost, or there is no incoming VIR Signal. U3850B pin 6 is the input from the luminance detector on Diagram 11. If this is positive, or there is a positive current through R3900, and it gets a positive signal from U3756, U3850 pin 4 will go negative, causing pin 13 of U3562D to go negative. Pin 4 of U3850B or pin 10 of U3850C going negative pulls C3864 to ground. Even though U3850C pin 10 or U3850B pin 4 could go positive, both are held down for approximately one line duration by C3864. As a result, if there is no chrominance during VIR Signal time, the total gating of the VIR Signal is inhibited. U3762B is clocked through pin 11. As soon as the period of U3750B is over, it is cleared back to zero, and turns off the gating of the chrominance. The output, pin 12, of U3750B clocks one-shot U3550B through pin 10. This is approximately a 4 microsecond interval, which is the interval between the end of chrominance and the start of luminance sampling. This clocks U3762A, which in turn starts the gating of the luminance. The gating is ended by the ending of the time constant of one-shot U3756. Ending of the one-shot U3756 also starts another one-shot (U3766A) through pin 2. This is approximately 4 microseconds, which is the interval between the end of the luminance sampling and the start of the set-up sampling. At the end of this one-shot, it starts another one-shot, U3766B, with a time constant of approximately 6 microseconds, after which it samples the setup. At pin 6 of U3562B is an output going to retriggerable one-shot U3360A. As long as it continues to receive pulses, pin 13 stays positive, indicating presence of a VIR Signal. If it misses a few of these pulses, pin 13 goes negative, pulling down CR3278, and driving mode switching circuitry on Diagram 8. This switches the 1440 to the Manual mode. If the VIR Signal returns, U3360A pin 13 goes immediately positive, but the instrument will not go out of Manual until C3274 on Diagram 9 has charged positive.

DECODER SYNC STRIPPER (11)

Input Amplifier

The input to Diagram 11 is an amplifier, Q4192 and Q4190, which receives two inputs: (1) from the rear panel EXTERNAL CORRECTION INPUT connector (2) from the output amplifier on Diagram 4. This allows the 1440 to either correct the output of the instrument or to correct a signal processed by other instruments after the 1440. The input is switchable by turning plug-jumper P4384.

The output of the input amplifier drives a sync stripper, which is the same as the one on Diagram 6, except that it contains a luminance detector (Q4156). Signals in this circuit may be delayed in time because of circuitry between PROGRAM OUT and EXTERNAL CORRECTION INPUT. The delay is not known, so sync timing must be reestablished.

Q4156 detects when the luminance is above a certain level and drives the VIR Signal Detector, indicating VIR Signal luminance is present. The output of the sync stripper, Q4256, goes to CR4051 and Q4152, a sync detector. It detects that the signal has gone to a positive level. If there is no incoming sync, the output of the sync stripper is negative. The output, P4048-4 drives circuitry on Diagram 9. If there is no sync, the instrument is switched to Manual mode. At the output of the sync stripper is RC network, C4250-R4438. This sets the sync time for clamping of the demodulated outputs, and for gating the sync amplitude sampler on Diagram 13. The sync stripper drives another RC network (C4242-R4238), which sets the time that the burst detector on Diagram 12 is enabled.

Luminance Amplifier

The input amplifier drives through 3.58 MHz resonant network C4376-L4378, to a chrominance amplifier on Diagram 12. The resonant network input goes through R4296 to a luminance amplifier, Q4454 and Q4440. The output of the luminance amplifier is clamped by a feedback clamp, sampled by Q4424. This samples the blanking just after the sync occurs, and holds that point at zero through U4436A and B back to the input of the luminance amplifier.

DEMODULATORS 12

Burst Gate

The output of Q4244, Burst Detector Enable, drives Q4590 through R4594 and gates chrominance off, except during burst. VIR Signal timing from Diagram 10 drives Q4592 through CR4688. Q4380 and Q4488 are chrominance amplifiers. The output goes through the gating circuit to an emitter follower which in turn drives the demodulators.

Demodulators

The chrominance is fed into three demodulators. The first, U4860, demodulates the in-phase component of burst. The second, U4658, demodulates at a 90 degree phase offset from burst. The third, U4644, is a self-synchronous amplitude detector which receives the chrominance at the switching inputs and the amplitude detecting inputs. The demodulated output is proportional to the amplitude of the chrominance and is not affected by phase. This goes through a filter, L4460 and L4456, to shape the signal and remove the 3.58 MHz. This in turn goes through an amplifier, whose output is held to ground by feedback clamp Q4732 and U4736A.

Q4732 is turned on during sync time (during which there should be no chroma) holding this level to zero volts. This level is fed to U4212C on Diagram 13, to be discussed later; to burst amplitude sampling gate, Q4612 on Diagram 13; and to the chrominance detector. Q4148 and Q4146, which detects that the amplitude is above a certain point and drives the VIR Signal Detector. The demodulator, U4860, is used in much the same way as U4644 except that the chroma is not put into the switching inputs. The switching inputs are driven by subcarrier oscillator Q4480 and Q4878. The output of the demodulator goes through a filter and through an amplifier which has the same type feedback clamp and has its output level detected during the same time as U4644. It then drives U4212D for sampling of the VIR Signal chroma phase. It also drives Q4832 to lock the oscillator. C4830 is usually held at ground. If it is not at ground, the feedback returns through U4730 to the oscillator to change its phase slightly and bring the voltage at C4830 back to ground by changing the capacitance of CR4890.

U4658 is offset 90° from U4860 by L4774 and C4668. The chrominance drives pin 4, and a DC voltage pin 1. The output from pin 9 goes through a filter which shapes the pulse and also removes the chrominance. The shaped pulse goes through a non-inveritng amplifier, Q4644 and Q4646. This demodulator output is not clamped since the output drives AC coupling. Q4420 is a burst timing detector that is turned on right after sync through CR4434 and is allowed to stay on for slightly longer than burst time. During that time the pulse made by burst comes through C4524, turning Q4416 on, and causing a positive pulse at its collector. This turns on Q4522, which sets a level at U4730A pin 2, of 0 V during the time burst is on. Since burst is a negative pulse, during most of the line that point will be positive. The output of U4730A will be negative if there is burst and the subcarrier oscillator is locked. Thus, either the subcarrier oscillator being unlocked, or a monochrome signal will cause U4730A pin 1 to go positive and switch the 1440 to monochrome mode.

The pulse at the collector of Q4416 is also used to gate the in-phase component at Q4832. If C4830 is not at 0 V, the voltage is fed back to the oscillator, and its phase is changed so that the voltage at C4820 will be at 0 V. The pulse at the collector of Q4416 is also used to gate the sampling of burst amplitude through Q4714 and gate Q4612, therefore storing the amplitude of burst at C4608.

DECODED SIGNAL SAMPLING 13

All six sampling circuits are similar, only the sync amplitude sampling will be discussed in detail.

The luminance amplifier drives Q4510, which is gated during the sync interval. Sync amplitude is thus transferred to memory cap C4504. R4508 is for sync averaging; it prevents one sync pulse from making large voltage changes

on the capacitor. The voltage on the capacitor is transferred to the output at P4920-2 through a voltage following amplifier U4861A. Since Q4512A and B are matched, the drain of Q4512B will be held at zero volts offset from the gate of Q4512A. U4861A pin 1 is tied back to the minus input. Pin 3, the plus input, has zero offset from pin 1.

The output of the luminance amplifier on Diagram 11, also goes through R4222 to U4212A. CR4036 keeps the level at pins 1 and 4 from going above +5 V. The luminance gating signal, a 5 V pulse, comes into P4048-2. Q4130 transforms the pulse into a 15-volt pulse, going from approximately minus 7.5 volts to plus 7.5 volts. When the signal goes to plus 7.5 volts, it enables switch U4212B and transfers the signal voltage to memory capacitor C4110. This samples the amplitude at the 50 IRE level of the VIR Signal. The sampling time for setup is applied through P4040-4 and Q4224, enabling U4212A and transferring its level to memory cap C4100. Pin 8 of U4212C is the chroma amplitude input. Pin 11 of U4212D is the chroma phase input. Both input signals are gated on through P4040-3 and Q4220. This permits U4212C to transfer the chrominance amplitude to C4406, and via U4212D, transfers the chroma phase to memory cap C4404.

SYNC & BURST ERROR AMPS, VIDEO ERROR AMPS

14 15

Bypass Logic

On Diagram 14 is the +15 V, which drives the relay through Q5806. With the instrument operating normally, this transistor is turned on, and U5818B pin 7 is negative. C5816 is charged to +15 V. When the instrument is turned off, the +15 V starts to go negative at the emitter of Q5806, but the base is held positive by C5816 through CR5812. This turns the transistor off immediately, allowing the instrument to bypass before the power supplies have gone very low. This prevents the 1440 from distorting the signal at turn-off.

At turn-on, C5832 and pin 6 of U5818B are at ground. After turn-on, pin 5 goes to approximately +4 volts. After approximately 1/2 second, U5818B pin 6 comes up to this voltage, causing pin 7 of U5818B to go negative, turning on Q5806 and turning on the relay. There is also a diode from C5832 that goes to Diagram 9. This can be set up with a plug-jumper P5749, so that if sync is lost, U5818B pin 6 will be pulled negative. When pin 6 goes negative, it causes pin 7 of U5818B to go positive, turning off the transistor and allowing the relay to go into bypass.

Remote Unit Drive

This circuit has the DC correction voltages that go to Diagrams 2, 3, and 4 to correct the six signal elements: Burst phase, burst gain, sync amplitude, setup, master gain, and chroma gain. All six are similar. Each of these six outputs has meter drive circuitry.

The meter drive circuitry has a DC level set, and a gain adjustment to compensate for different meter sensitivities. In the burst phase meter drive, the centering adjust is R5174 and the gain adjust is R5188. There is also a clamp, Q5295, that clamps the DC drive to the meter to 0 V in case there is no burst, or when in bypass. The input is from the outputs to the correction circuitry (from the preset con rol on burst phase, U5166B). The internal preset adjustment is R5250, and the remote Manual control comes through P5051-8. In Manual, pin 6 of U5122 is held at 0 V so that there will be no feedback from the signal amplitude. The control is only through R5250 or from remote. When in Manual control, Q5114 is turned on, clamping the source to ground. Also Q5116 is on, clampling pin 6 of U5122 back through a resistor to the input. This causes the output to follow the input; since the input has been clamped to ground, the voltage at pin 6 will be at 0 V. When switching to Manual, the time constant going back to ground will be set by R5118 and C5140. When in the Auto mode, the time constant at correction will be R5142 and C5140.

When in the Auto mode, Q5114 and Q5116 are open. If the level at P5201-9 tries to move in any direction, it causes the output (U5122 pin 6) to move. If U5122 pin 6 changes voltage, it corrects the signal to bring P5201-9 back to its original voltage. This voltage on P5201-9 can be controlled by R5108 (internal adjustment) or through the remote control. This is so that burst phase can be offset, and maintain a set phase offset. The feedback loop, via the correction circuitry on Diagram 5 and time constants in this circuit, tries to keep the input of U5122 (pin 2), held at ground.

Burst gain is approximately the same circuitry except that it has one resistor coming into it from the master gain. If the 1440 automatically goes to a different level of master gain, the burst gain tracks, but if the video signal changes, and the only correction needed is master gain, the burst gain circuitry will not move. The inputs to Q5114 and Q5214 are turned on if there is a monochrome signal input, or if the 1440 is in bypass or Manual operating mode. Q5295 and Q5195 are turned on if the 1440 is in bypass, or there is a monochrome signal input, but not if the 1440 is in the Manual mode. Q5694, Q5395, Q5895, and Q5695 are only on in bypass. Also Q5314, Q5612, Q5716, and Q5822 are on in the Manual mode, or in bypass, but not in monochrome.

The sync amplitude corrections are much the same as burst gain except that two zener diodes are added (VR5354 and VR5254). This is to allow more correction range in Manual mode than in Auto mode.

Setup and master gain are much the same as sync amplitude except that the input is from two operational amplifiers. One, the output going to setup, recognizes the level of the setup and any change in relation to master gain. That is, if master gain changes, the setup will follow it, or if the incoming video changes and master gain needs to change, the setup correction will not be made. Pin 1 of U5106A gives the amplitude of the level between setup and the 50 IRE level. That is, if the setup changes, the 50 IRE level will change by the same number of IRE as the setup. This does not call for a master gain change, only a setup change. So the output, U5706 pin 1, to the master gain correction circuitry is only the difference in level between setup level and the 50 IRE level. U5818A, pin 1, is the output of the chroma gain. The input is the relationship of master gain to chrominance. Pin 2 of U5818A is at ground because pin 3 of P5801, for chrominance, is negative and goes more negative as the chrominance amplitude increases.

As luminance amplitude increases, pin 1 of U5706A goes positive. (If incoming video increases, pin 2 of U5818A will stay at ground, calling for only a master gain correction.) The remote control inputs for manual control may be switched off, so that when the VIR Signal is lost the 1440 will go to a preset mode. This will be done in the remote control unit at the customers option.

0—REFERENCE DRIVE 16

Circuitry on Diagram 16 accepts timing pulses from the Line Counter on Diagram 8, produces a 0 carrier reference drive pulse, and gates a correction drive circuit to change the master gain of the 1440.

R-S flip-flop, U668B&D, is set by the selected line pulse from the Line Counter on Diagram 8, and reset by composite sync from the Sync Stripper, Diagram 6. When U668B&D is reset, pin 6 goes low, switching one-shot U666. After the one-shot delay (set to about 12 μs), U666 pin 1 goes high, switching U664 and U665.

U664 pin 6 goes high and stays there for about 15 μs. The 15 μs pulse is applied to pin 2 of Nand gate U663A, and to the 0 CARRIER REFERENCE DRIVE OUT connector on the 1440 rear section. U665 pin 1 goes low when clocked by U666, and stays there for about 1 μs. The 1 μs, negative-going pulse is applied to pin 1 of U663A. When the 1 μs delay is past, U665 pin 1 goes high, causing U663A pin 3 to go low. The low at U663A pin 3 turns off Q683, turning Q684 on.

Q684 allows video from the EXTERNAL CORRECTION INPUT connector on the 1440 rear section to pass for about 14 μs. During this 14 μs, the 0 carrier reference pulse, which was gated by the drive pulse from U663D, is applied to memory cap, C685. Any amplitude change of the 0 carrier reference pulse is applied, through voltage follower U699B, to inverting amplifier U699A. The output of U699A drives master gain correction circuitry on Diagram 15. This causes the 1440 to correct all amplitudes as a ratio of the zero carrier reference pulse. If the zero carrier reference is not being used, the input to the master gain correction circuit is grounded through P669.

POWER SUPPLY 17

The Low Voltage Power Supply circuit provides three regulated supplies; +15 volts, +5 volts, and −15 volts. Electronic regulation is used to provide stable, low ripple output voltages. All the supplies are current-limited to prevent instrument damage in the event that a supply is shorted to ground. The primary circuit of the transformer can be connected to be operated from either a 115 VAC mains source or a 230 VAC mains source.

The −15 volt supply provides the reference voltage for the +5 and +15 volt supplies. The reference for the −15 volt supply is a 9.1 volt zener diode, VR9850.

The output from the secondary winding (pins 6 and 7 of T9001) is rectified by a full-wave rectifier consisting of CR9870, CR9872, CR9874, and CR9876. The rectified voltage is filtered by C9061 and applied through a −15 volt series regulator, Q9085, to the load. Series regulator Q9085 and its driver, Q9850, are controlled by a voltage comparator consisting of Q9854 and Q9856 with associated components. C9852 filters any noise generated by the −15 volt reference, VR9850.

Q9852 and associated components is an overload protection circuit. During excessive load current, Q9852 (normally off) turns on, which turns Q9850 and Q9085 off, disconnecting the −15 volt supply.

Both the +5 and +15 volt supplies are similar to the −15 volt supply.

REMOTE CONNECTOR 18

The REMOTE connector, J-P9010, can be used to control the 1440 from remote locations, to monitor the amount of correction used, and to drive visual indicators and alarms, if desired. See Operating Instructions, Section 1, of this manual for details.

MAINTENANCE

INTRODUCTION

Section 4 contains information for maintaining and servicing the 1440, including:

Preventive Maintenance. Cleaning, visual inspection, etc;

Troubleshooting Aids. Information to help in isolating a problem to a specific circuit;

Corrective Maintenance. Replacement procedures and parts ordering information.

PREVENTIVE MAINTENANCE

Preventive maintenance consists of periodic cleaning and visual inspection. A regular schedule of preventive maintenance can prevent breakdown and improve the reliability and appearance of this instrument.

Cleaning

The 1440 should be cleaned as often as operating conditions require. Dirt accumulated in the instrument acts as an insulating blanket that can cause overheating and breakdown by preventing efficient heat dissipation. Under high humidity conditions, accumulated dirt can also provide an undesired electrical conduction path.

CAUTION

Avoid using chemical cleaning agents that might damage the plastics used in this instrument. Chemicals to avoid include benzene, toluene, xylene, acetone, or similar solvents.

Exterior. Loose dirt on the outside of the 1440 can be removed with a soft cloth, dampened in a solution of water and mild detergent, or with a small paint brush. The brush is useful in dislodging dirt from around the INPUT and OUTPUT test point jacks, and the holes housing the LED indicators. Do not use abrasive cleaners.

Interior. Dust inside the 1440 should be removed occasionally, because of its conductive quality under high humidity conditions. The best way to remove the dust is to expel it with dry, low-velocity air. Remaining dirt can be removed with a soft brush, or a cloth dampened with a mild detergent and water solution. A cotton swab can be used for cleaning in narrow spaces.

Visual Inspection

Inspect the 1440 for broken connections, loose or disconnected pin connectors, improperly seated transistors and integrated circuits, damaged circuit boards, and heat-damaged components.

The correct procedure for most defects is obvious; however, take particular care if heat-damaged components are found. Overheating usually indicates other instrument problems; therefore, the cause of the overheating must be found and corrected to prevent recurrence of the damage.

Transistor and Integrated Circuit Checks

Periodic checks of transistors and integrated circuits used in the 1440 are not recommended. The best check of the performance of active devices is actual circuit operation.

Performance of the various circuits is thoroughly checked by performing the Performance Check Procedure in this manual (see Table of Contents). Any substandard transistors or integrated circuits will usually be detected then.

TROUBLESHOOTING

The following information is provided to help the service technician isolate troubles in the 1440. Troubleshooting aids, described here and troubleshooting techniques that follow, should be used in conjunction with the Circuit Description in this manual (see Table of Contents) to help locate a defect.

Troubleshooting Aids

Diagrams. Schematic diagrams are provided on foldout pages in the rear portion of this manual. Each component, its electrical value, and the circuit number are shown on the diagrams.

A gray box around a circuit number indicates that the component has been added (or removed) at some serial number, or that the component value, tolerance or rating, or supplier has been changed at some serial number up to the time of printing the manual. See the Replaceable Electrical Parts list for previous values and serial number ranges.

Each diagram has been assigned a title and a diagram number. For example, the first schematic is titled INTERFACE & RELAY, and has been assigned the number 1. Notice the heavy solid black line surrounding some of the circuitry on diagram 1. That line is used to identify the circuit board on which the components within the surrounded area are physically located. In this example, the components within the area are located on the A8 RELAY circuit board.

The grid coordinates around the outside edges of the diagram allow easy determination of the place of a component in the circuit when used in conjunction with the circuit board illustration and the parts locating chart. Assume, for example, that during a visual check, a resistor on the Relay board is found to be burned. A glance at the circuit board illustration (located on the back of the Block Diagram) will determine the component's circuit number (e.g., R997). Next, look at the parts locating chart on the inside section of Diagram 1 pull-out page. R997 is located at coordinates B-2. Now, its place on the schematic can be easily found. These references allow for correlation between the schematics, circuit boards, and electrical parts list.

Circuit Boards. The location of each circuit board within the instrument is shown alongside each circuit board illustration. Circuit board illustrations are provided on the back of the fold-out pages that precede the relevant diagrams. The assembly number assigned to each circuit board is an abbreviated method for identifying the circuit boards in the Replaceable Electrical Parts list.

Each electrical component on the board is identified by its circuit number, the same as that used on the schematic and the Replaceable Electrical Parts list. In most cases, these circuit numbers were assigned on a grid system on the board as a convenience to the user of the instrument. For example, notice the circuit board drawing opposite Diagram 2. The upper-left corner of the Processing board has been assigned numbers near 1100. Proceeding left to right, the numbers increase toward 1190 at the upper-right corner. From top to bottom, the numbers increase toward 1800 at the bottom-left corner, and 1899 at the bottom-right corner. Using this method, the physical location of each component is readily determined.

Fig. 4-1 shows the location of all circuit boards within the 1440, in relation to the main chassis.

Wire and Component Color Coding

Wire Color Codes. All insulated wires in the 1440 are color-coded to help in signal and power supply lead tracing. Tables 4-1 and 4-2 summarize the coding system used in the 1440.

Table 4-1

WIRING COLOR CODES

Color Code	Use
Black	Chassis Ground
Yellow on Green	Safety Ground
White[a]	Signal
Red[b]	B+
Violet[b]	B−

[a]Color stripes are used on these wires as an aid to circuit tracing.

[b]Color stripe on wire indicates position of supply with respect to 0 V (e.g., a black stripe on a red wire would be the first voltage in the positive direction). If a second stripe is used (white only), this indicates a non-regulated supply.

Table 4-2

POWER CORD CONDUCTOR IDENTIFICATION

Conductor	Color	Alternate color
Ungrounded (Line)	Brown	Black
Grounded (Neutral)	Blue	White
Grounding (Earthing)	Green-Yellow	Green-Yellow

Resistor Color Code. The resistance values of carbon and metal film resistors are coded on the components with the standard EIA color code (see Fig. 4-2). The physical appearance of some of the carbon resistors is similar to that of metal film resistors. Note the third significant figure band on metal film resistors that is not present on carbon resistors.

Capacitor Marking. The capacitance value of a common disc capacitor or electrolytic is marked in microfarads on the side of the component body. The white ceramic capacitors used in the 1440 are color-coded in picofarads, using a modified EIA code (see Fig. 4-2). The dipped tantalum capacitors are color-coded in picofarads, using a modified EIA code, with the dot indicating both the voltage rating and the positive side (see Fig. 4-3).

Troubleshooting Techniques

These troubleshooting techniques are arranged in an order that checks the simple possibilities before proceeding with extensive troubleshooting.

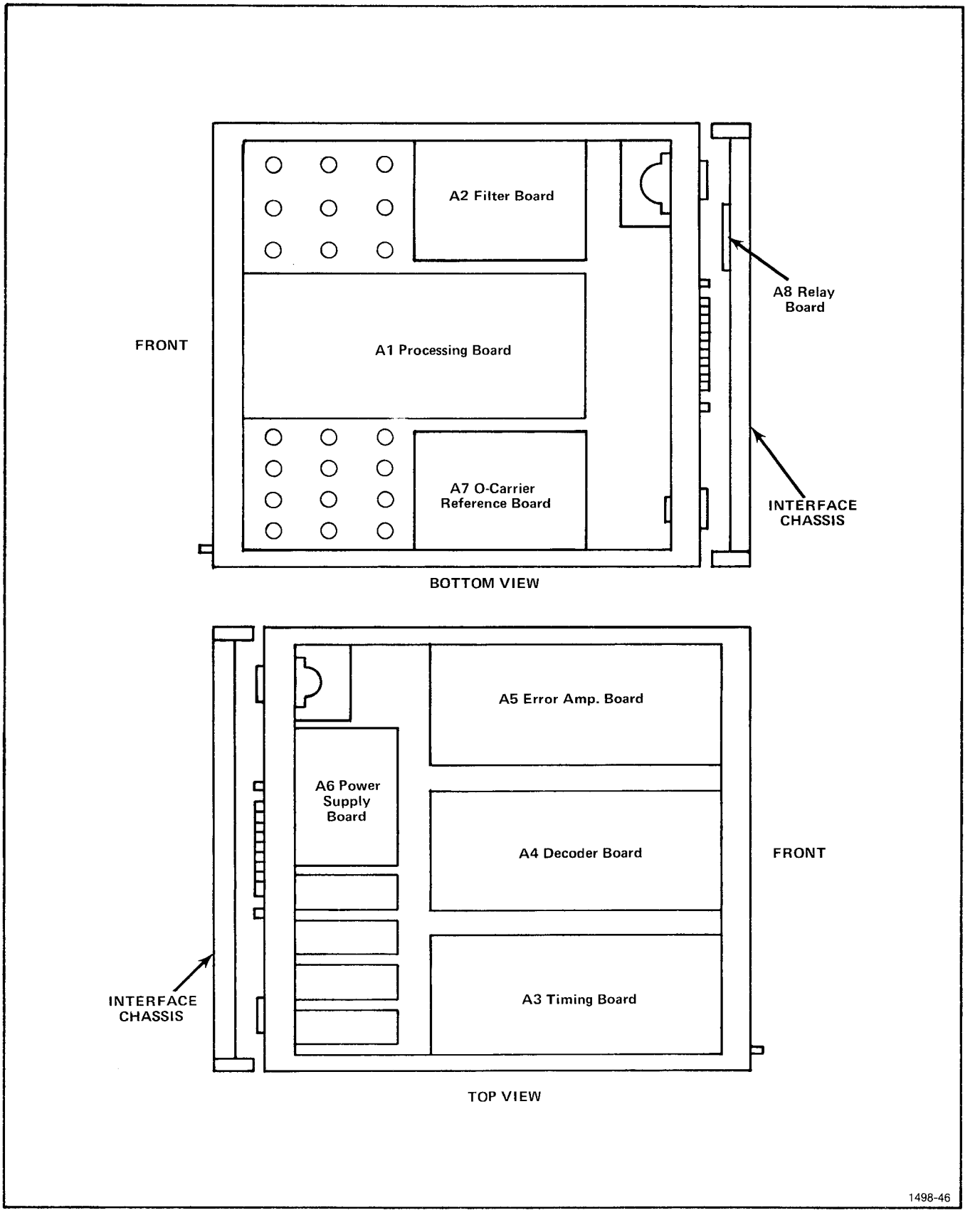

Fig. 4-1. Location of printed circuit boards in the 1440.

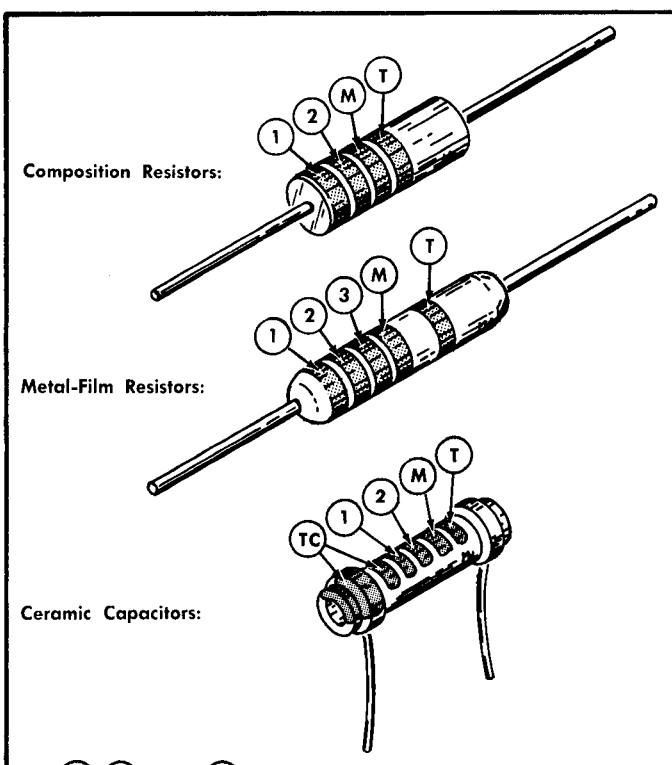

1 2 and 3 —1st, 2nd and 3rd significant figures;
M —multiplier; T —tolerance;
TC —temperature coefficient.

Resistor and Capacitor Color Code

Color	Significant Figures	Multiplier: Resistors	Multiplier: Capacitors	Tolerance: Resistors	Tolerance: Capacitors
Silver	---	10^{-2}	---	±10%	---
Gold	---	10^{-1}	---	±5%	---
Black	0	1	1	---	±20% or 2 pF*
Brown	1	10	10	±1%	±1% or 0.1 pF*
Red	2	10^{2}	10^{2}	±2%	±2%
Orange	3	10^{3}	10^{3}	±3%	±3%
Yellow	4	10^{4}	10^{4}	±4%	+100% −0%
Green	5	10^{5}	10^{5}	±0.5%	±5% or 0.5 pF*
Blue	6	10^{6}	10^{6}	---	---
Violet	7	---	---	---	---
Gray	8	---	10^{-2}	---	+80% −20% or 0.25 pF*
White	9	---	10^{-1}	---	±10% or 1 pF*
(none)	---	---	---	±20%	±10% or 1 pF*

*For capacitance of 10 pF or less.

NOTE: T and/or TC color code for capacitors depends upon manufacturer and capacitor type. May not be present in some cases.

Fig. 4-2. Standard EIA color coding for resistors and capacitors.

Troubleshooting Equipment

The following equipment is useful for troubleshooting the 1440:

1. Multimeter

Description: VOM, Input impedance, 10 MΩ; dc voltage range, 0.2 V to 1 kV full scale; resistance range, 200 Ω to 20 MΩ full scale; accuracy, 1% or better. Test prods must be insulated to prevent accidental shorts. TEKTRONIX DM502 with TM501 Power Module recommended.

NOTE

This instrument may be checked with a VTVM, 10 MΩ input impedance and 0 to 500 volts range; ohmmeter, 0 to 50 MΩ; accuracy within 3%.

Purpose: To check voltages, diodes, resistor values, and for general troubleshooting in this instrument.

2. Test Oscilloscope

Description: Frequency response, dc to 10 MHz or greater; deflection factor, 1 mV/div to 5 V/div (10 mV/div to 50 V/div with 10X probe); sweep range, 5 ns/div to 5 s/div. TEKTRONIX 7603 Oscilloscope with 7A13 and 7B53A plug-in units recommended.

Purpose: To check waveforms in this instrument.

3. Transistor Checker

Description: Dynamic transistor checker (static-type checkers are not recommended, since they do not simulate actual operating conditions). TEKTRONIX Type 576 Curver Tracer recommended.

Purpose: To check questionable transistors when known good replacements are not readily available.

Rated Voltage VDC 25°C	Color	CODE FOR CAPACITANCE IN PICOFARADS		
		1st Figure	2nd Figure	Multiplier—pF
4	Black	0	0	None
6	Brown	1	1	X 10
10	Red	2	2	X 10^2
15	Orange	3	3	X 10^3
20	Yellow	4	4	X 10^4
25	Green	5	5	X 10^5
35	Blue	6	6	X 10^6
50	Violet	7	7	X 10^7
	Gray	8	8	
3	White	9	9	

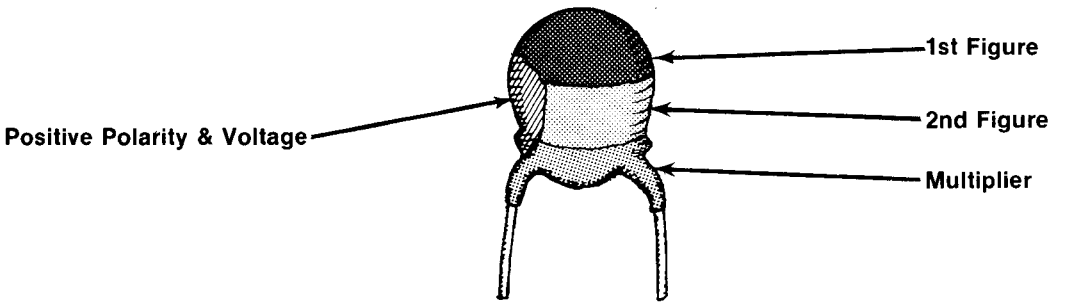

1498-22

Fig. 4-3. Color code for dipped tantalum capacitors.

Procedure

1. Check Control Settings and Indicators. Check the 1440 front panel for incorrect control settings, and for information that can be obtained from the LED indicators. The LED indicators tell mode and signal status. Two front-panel test points can provide signal routing information.

2. Check Associated Equipment. An apparent instrument problem can often be traced to associated equipment. If the 1440 is being used with a remote control unit, check that for proper setup and operation. The Operating Instructions section of this manual has remote operation information and information regarding the two front-panel test points. Check that the signal is properly connected between the 1440 and associated equipment, and that the interconnecting cables are not defective. Also, check the power source.

3. Visual Check. Visually check the portion of the instrument in which the trouble appears to be located. Look for unsoldered connections, loose pin connectors, broken wires, damaged circuit boards, damaged components, etc.

4. Check Instrument Calibration. The apparent trouble may be only a result of misadjustment and may be corrected by calibration. A complete performance check is given in this manual. (See Table of Contents.)

5. Isolate Trouble to a Circuit. Trouble symptoms can often point to the circuit at fault. For example, if a VIR signal is present, but the front-panel LED indicator says "VIR signal absent" and the 1440 is operating in the preset mode, a good place to start would be the VIRS Detector circuit. (Use the Block Diagram for circuit-to-circuit signal following.) The Circuit Description section explains signal routing and processing. By studying the circuit description and checking controls, indicators, and signals at the bnc connectors, it is often possible to determine improperly operating circuits.

Incorrect operation of all circuits often indicates trouble in the power supply. Check first for correct voltage of the individual supplies. A defective component (e.g., shorted capacitor) elsewhere in the instrument can also appear as a power supply trouble and would affect operation of other circuits.

6. Check Circuit Board Interconnection. After the trouble has been isolated to a particular area or circuit, check the pin connectors on the circuit board for correct connection.

The pin connectors used in the 1440 also provide a convenient means of circuit isolation. For example, a short in a power supply can be isolated by disconnecting the power distribution pin connectors from the board when making resistance-to-ground checks.

7. Check Voltages and Waveforms. Often, a defective component can be located by checking for the correct voltage or waveform in the circuit. Typical waveforms are given in the Diagrams section. The waveforms are not absolute, however, and may vary slightly between instruments. Carefully note the control settings and input signals that may be required to obtain the various waveforms.

CAUTION

Due to component density on the circuit boards, care should be taken with meter leads and probe tips when making connections. Accidental shorts can cause abnormal voltages or transients which may destroy many components. "Ground lugs" are not always at ground potential. Check the diagrams before using such connections as ground for meter leads or oscilloscope probes. Some transistor cases may be elevated. This caution note also applies to recessed screws that hold transistors to the chassis.

8. Check Individual Components. The following substeps are methods of checking components in the 1440. Components that are soldered in place should be checked without removal, if possible. If isolation of the component is questionable, unsolder one end.

a. TRANSISTORS. The best check of transistor operation is actual performance in an operating circuit. If a transistor is suspected of being defective, it can best be checked by substituting a new transistor. However, be sure that circuit conditions are such that the new transistor will not be damaged. If substitute transistors are not readily available, use a dynamic transistor tester, such as a TEKTRONIX 576. Static-type testers are not recommended, since they do not simulate actual operating conditions.

b. DIODES. Diodes can be checked for open or shorted conditions by measuring front- and back-resistance between terminals. Use an ohmmeter scale with an internal source between 800 millivolts and 3 volts. The resistance should be very high in one direction (backward), and very low when the leads are reversed (forward direction).

CAUTION

Do not use an ohmmeter that has high internal current. High current may damage the diode.

c. RESISTORS. Check the resistors with an ohmmeter. Check the Replaceable Electrical Parts list for the tolerance of the resistors used in the instrument. Resistors normally do not need to be replaced unless the measured value varies widely from the specified value.

d. INDUCTORS. Check for open inductors by checking continuity with an ohmmeter. Shorted (or partially-shorted) inductors can usually be found by checking the waveform response when high-frequency (fast-rise) signals are passed through the circuit. Partial shorting often reduces high-frequency response, resulting in roll-off of the leading edge of fast-rising pulses.

e. CAPACITORS. A 'leaky' or shorted capacitor can best be detected by checking resistance with an ohmmeter on the highest scale. Do not exceed the voltage rating of the capacitor. An open coupling capacitor can best be detected with a capacitance meter or by checking whether the capacitor passes ac signals.

9. Repair and Readjust the Circuit. If any defective component is located, follow the replacement information given in this section. Check the performance of any circuit that has been repaired or that has had any electrical components replaced.

CORRECTIVE MAINTENANCE

General

Corrective maintenance consists of component replacement and instrument repair. Information of a special nature needed to replace components or repair the 1440 is given here.

Obtaining Replacement Parts

Standard Parts. All electrical and mechanical replacement parts for the 1440 can be obtained through your local Tektronix Field Office or representative. However, many of the standard electronic components can be obtained locally in less time than is required to order from Tektronix, Inc. Before purchasing or ordering replacement parts, consult the parts list in this manual for value, tolerance, and rating.

NOTE

When selecting replacement parts, it is important to remember that the physical size and shape of a component may affect its performance in the instrument, particularly at high frequencies. All replacement parts should be direct replacements unless it is known that a different component will not adversely affect instrument performance.

Special Parts. In addition to the standard electronic components, some special components are used in the 1440. These components are manufactured or selected by Tektronix, Inc. to meet specific perfomance requirements, or are manufactured for Tektronix, Inc. in accordance with our specifications. The Mfr. Code in the Replaceable Electrical Parts list, referenced to the Cross Index Mfr. Code Number to Manufacturer at the beginning of the parts list, identifies the source of individual components.

Other specially-selected components are indicated under the Name & Description column of the parts list as 'SEL'. Most of the mechanical parts used in this instrument have been manufactured by Tektronix, Inc. Order all special parts directly from your local Tektronix Field Office or representative.

Ordering Parts. When ordering replacement parts from Tektronix, Inc., include the following information:

1. Instrument type.

2. Instrument serial number.

3. A description of the part (if electrical, include circuit number).

4. Tektronix Part Number (refer to the Replaceable Electrical Parts list).

Component Replacement

WARNING

Disconnect the instrument from the ac power source before replacing components.

Multiple Terminal Connector Holders. Most interconnections between circuit boards, or between the circuit boards and chassis-mounted components, are made through pin connectors. The terminals in the connector holders are identified with numbers. Connector orientation to the circuit board is keyed with triangles, one on the holder and one on the circuit board. The triangle indicates terminal (or pin) 1. See Fig. 4-4.

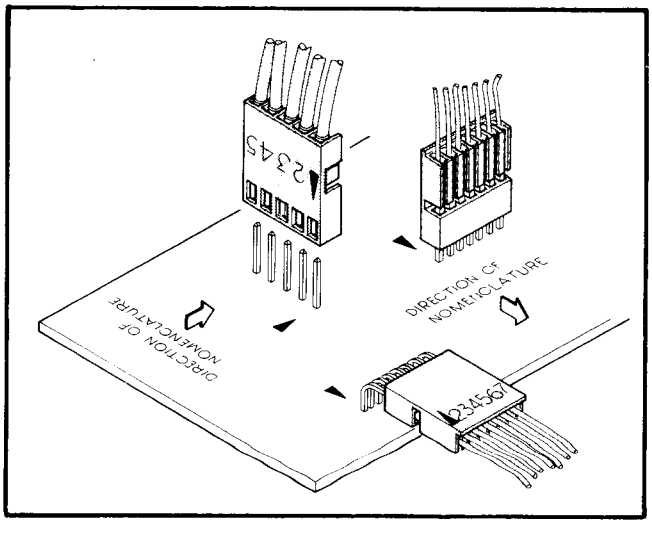

Fig. 4-4. Multipin circuit board connectors.

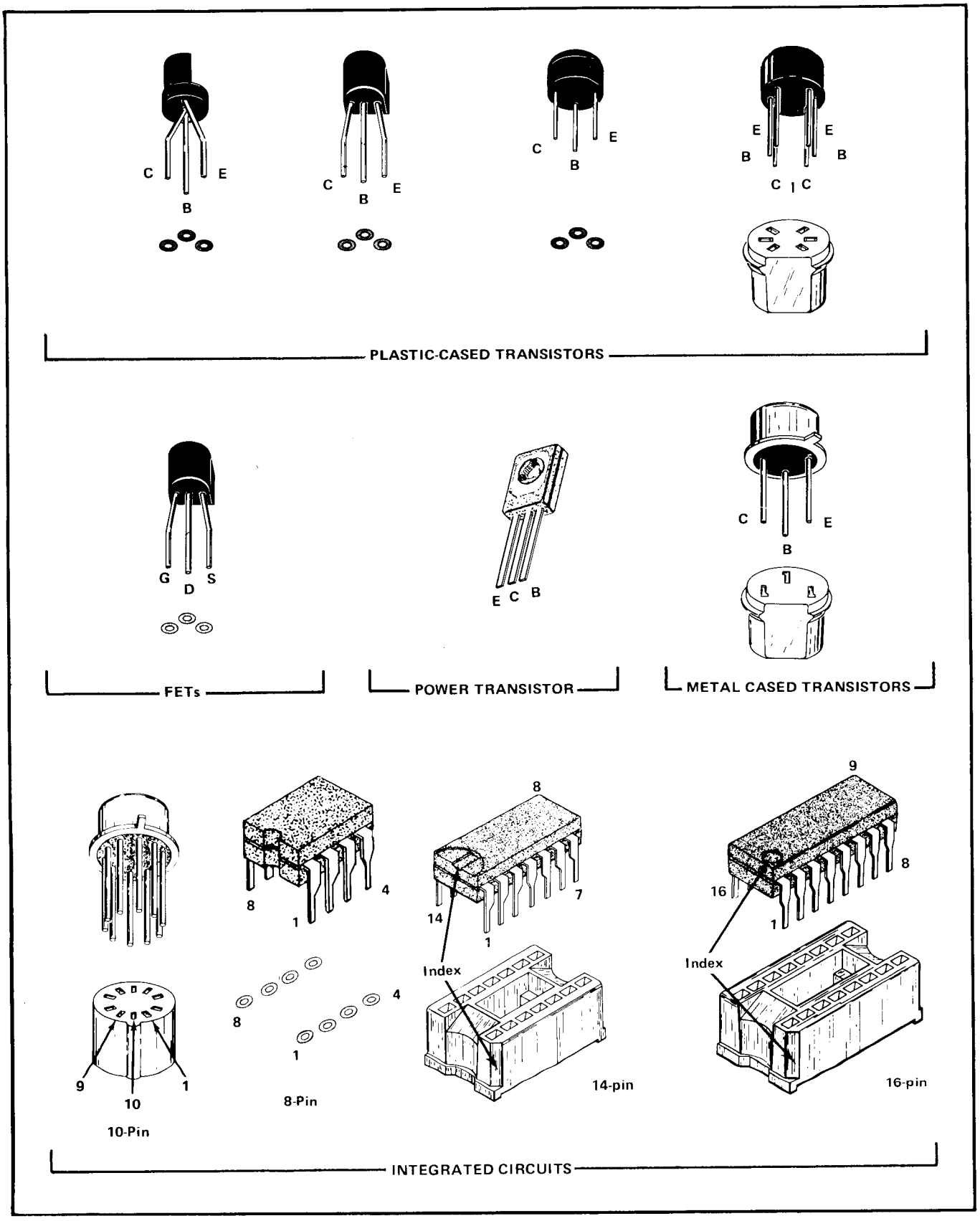

Fig. 4-5. Transistor and integrated circuit basing diagrams.

Circuit Boards. If a circuit board is damaged beyond repair, the entire assembly, including all soldered components, can be replaced. See the Replaceable Electrical Parts list for part number relating to the individual circuit board assemblies.

Transistor and Integrated Circuit Replacement. Transistors and integrated circuits should not be replaced unless actually defective. Replacement or exchange of components may affect the calibration of the instrument. If a transistor or integrated circuit is removed during routine maintenance, return it to its original socket.

Any replacement component should be of the original type or a direct replacement. Bend the leads to fit the socket and cut the leads to the same length as the original component. See Fig. 4-5 for basing diagrams.

After any component is replaced, check the operation and calibration of the associated circuits.

LED Indicator Light Replacement. To remove, pull the 2-pin harmonica connector from the LED leads. Next, grasp the outer ring at the rear of the light with needle-nose pliers and remove. Now, grasp both leads with the pliers and pull the LED out of the front-panel assembly. Install the new light by reversing this procedure. Fig. 4-6 illustrates polarity of connections to be observed.

Power Transformer Replacement. If the power transformer becomes defective, contact your local Tektronix Field Office or representative. Replace only with a direct replacement Tektronix transformer.

Power Input Connector and RFI Filter Replacement. The power input connector and RFI filter is replaceable as a unit; repair should not be attempted. If replacement is necessary, observe proper polarity to ensure instrument protection.

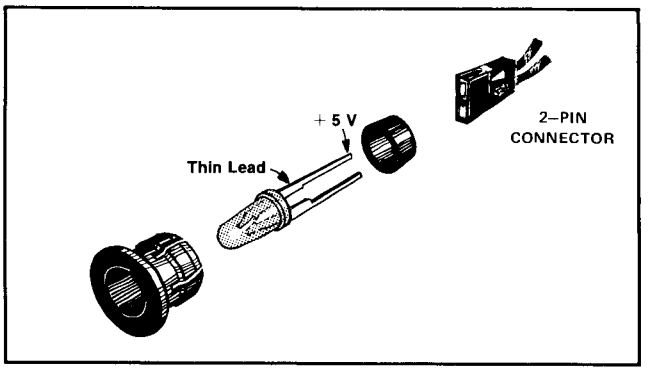

Fig. 4-6. LED replacement connections.

Soldering Techniques

WARNING

Disconnect the instrument from the power source before soldering.

Circuit Boards. Use ordinary 60/40 solder and a 35-40-watt pencil-type soldering iron on the circuit boards. A higher wattage soldering iron may separate the etched wiring from the base material.

The tip should be made of copper and have a chisel or beveled shape, with a 1/8-inch width. The tip of the iron should be clean and properly tinned for best heat transfer to the solder joint.

The following technique should be used to replace a component on a circuit board. Most components can be replaced without removing the boards from the instrument.

1. Grip the component lead with long-nose pliers between the solder connection and the component body. Touch the soldering-iron tip to the lead at the solder connection. Do not lay the iron directly on the board. (See Fig. 4-7.)

2. When the solder begins to melt, pull the lead out gently. This should leave a clean hole in the board. If not, the hole can be cleaned by reheating the solder and placing a sharp object such as a toothpick into the hole to clean it out. A vacuum-type desoldering tool can also be used for this purpose. If the removal is not accomplished in the first few seconds of heat application, go to another connection or wait a few minutes before reheating the connection. This is to avoid transferring excessive heat to the board substrate.

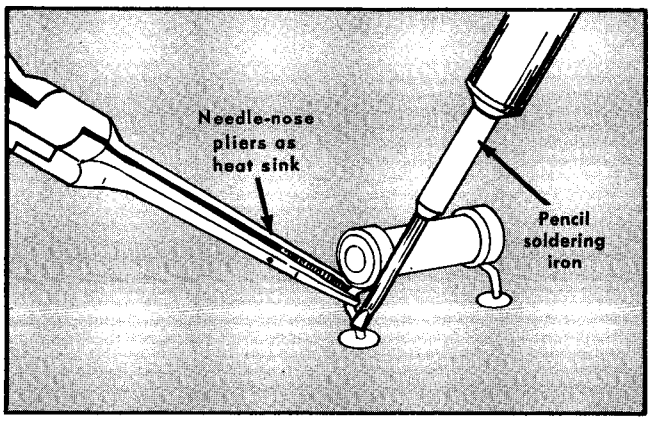

Fig. 4-7. Use of a heat sink to protect components during soldering.

3. Bend the leads of the new component to fit the holes in the board. If the component is replaced while the board is mounted in the instrument, cut the leads so that they will just protrude through the board. Insert the leads into the holes in the board so that the component is firmly seated against the board (or as positioned originally). If it does not seat properly, heat the solder and gently press the component into place.

4. Touch the iron to the solder connection and apply a small amount of solder to make a firm solder joint; do not apply too much solder. To protect heat-sensitive components, hold the lead between the component body and the solder joint with a pair of long-nose pliers (see fig. 4-7) or other heat sink.

5. Clean the area around the solder connection with a flux-remover solvent. Be careful not to remove information printed on the board.

Metal Terminals. When soldering to metal terminals (e.g., switch terminals, potentiometers, power-transistor leads, etc), ordinary 60/40 solder can be used. Use a soldering iron with a 40 to 75 watt rating and a 3/16-inch wide, wedge-shaped tip.

Observe the following precautions when soldering to metal terminals:

1. Apply only enough heat to make the solder flow freely.

2. Apply only enough solder to form a solid connection. Excess solder may impair the function of the part, or flow into adjacent areas and cause shorts.

3. If a lead extends beyond the solder joint, clip off the excess length.

4. Clean the flux from the solder joint with a flux-remover solvent.

Recalibration After Repair

After any electrical component has been replaced, the calibration of that particular circuit should be checked, as well as the calibration of other closely related circuits. Since the power supply affects all circuits, calibration of the entire instrument should be checked if work has been done in the power supply or if the power transformer has been replaced. The Performance Check Procedure in this manual provides a quick and convenient means of checking instrument operation. (See the Table of Contents.)

PERFORMANCE CHECK/CALIBRATION PROCEDURE

INTRODUCTION

This procedure can be used to either verify that the 1440 is meeting the electrical performance requirements as listed under Specification in the Operating Instructions section of this manual, or to recalibrate it after repairs or extended periods of operation. A short-form procedure precedes the Performance Check/Calibration Procedure, and can be used as a calibration record or as an index to the complete procedure.

In the complete procedure, steps or parts of steps that relate to Performance Check only are identified by the word "CHECK" in the step heading. Those steps that pertain to both the Performance Check and Calibration steps are headed "CHECK/ADJUST". If a Performance Check only is to be performed, follow the parts of these combined steps through all "CHECK" portions.

Front- and rear-panel control and connector names on the 1440 are fully capitalized; for example, PROGRAM MONITOR OUT. Control and connector names on test or auxiliary equipment and internal controls or adjustments in the 1440 have only the first letter capitalized; for example, Test Oscilloscope, Time/Div, etc.

Adjustment locations within the 1440 are shown throughout the procedure.

Limits and tolerances in the Calibration Procedure are intended as guides to normal performance, and are not instrument specifications unless stated as such in the Specification portion of this manual.

TEST EQUIPMENT REQUIRED

The following test equipment, or equivalent, is recommended for use with this procedure. The measurement capabilities described are the minimum required to calibrate the instrument. Each piece of test equipment is assumed to be operating within its stated specifications. If alternative equipment is used, it must meet or exceed these requirements.

1. Test Oscilloscope. Bandwidth, dc to 30 MHz; minimum deflection factor, 1 mV/Div; two input channels with provisions for independent or differential operation; dual time base with a range from 50 ns/div to 5 s/div and provisions for a delayed sweep.

For example, a TEKTRONIX 7603 Oscilloscope with a 7B53A Dual Time Base and a 7A13 Differential Comparator plug-in units.

2. Video Signal Source. Capable of providing composite video signals, including field rate and line rate square waves, $\sin^2$ pulse and bar, multiburst, staircase, and a VIR Signal. For example, a TEKTRONIX 149A NTSC Test Signal Generator.

3. Waveform Monitor. Capable of viewing line rate and field rate signals, with a magnifier to view the vertical interval. For example, a TEKTRONIX 1480 Waveform Monitor. (A TEKTRONIX Type 529 Waveform Monitor may be used, if available.)

4. Vectorscope. Capable of measuring differential gain and differential phase, as well as providing a vector display. For example, a TEKTRONIX 520A NTSC Vectorscope.

5. Sync Generator. Capable of providing black burst signal for drive to the Video Signal Source, For example, a TEKTRONIX SPG1 or SPG2 Sync Generator with a 1410 Mainframe. (A TEKTRONIX 140 NTSC Test Signal Generator may be used, if available.)

6. Voltage Control Unit. For example, General Radio W10MT3W Metered Variac Autotransformer.

7. RMS Voltmeter. For example, a Hewlett-Packard Model 3400A.

8. DC Voltmeter. Accuracy, within 0.1%. For example, a TEKTRONIX DM 502 Digital Multi-meter (see item 10).

9. Constant Amplitude Signal Generator. Output amplitude continuously variable to greater than 500 mV; frequency range continuously variable from 1 MHz to 5 MHz or greater, with a fixed 50 kHz reference frequency. For example, a TEKTRONIX SG 503 Leveled Sine Wave Generator (see item 10).

10. Power Module. For powering and housing TEKTRONIX DM 502 and SG 503 units. (Required if using these units.) TEKTRONIX TM 503.

11. Return Loss Bridge. Tektronix Part No. 015-0149-00.

12. Minimum Loss Attenuator. 50 Ω-to-75 Ω. Tektronix Part No. 011-0057-00.

13. 5 MHz Low-Pass Filter. Tektronix Part No. 015-0213-00.

14. 3.58 MHz Bandpass Filter.

15. Cables, 75-ohm (10 required). Tektronix Part No. 021-0074-00.

16. End-Line Termination, 75-ohm (5 required). Tektronix Part No. 011-0102-00.

17. Continuous Random Noise Measurement Weighting Network, 5 MHz. Tektronix Part No. 015-0215-00.

18. 10X Probe. Tektronix Part No. 010-6105-01 (P6105 Probe).

19. 1X Probe. Tektronix Part No. 010-6101-01 (P6101 Probe).

20. Vestigial Sideband Demodulator.

Remote controls are required to perform the complete 1440 Performance Check/Calibration Procedure. See the Operating Instructions section of this manual for remote operation details.

21. Remote Control Unit. Tektronix Part No. 015-0240-00.

22. Remote Monitor Unit. Tektronix Part No. 015-0239-00.

The 149A Remote plug, P9014, must be modified to allow sync and phase lock of the Full Field signal while using a black burst synchronizing signal. Fig. 5-1 shows wiring details to provide this function.

SHORT-FORM PROCEDURE

In the following Short-Form Procedure, steps labeled Check, Check/Adjust, or Adjust are all performed for complete calibration of the 1440. For a Performance Check, only the steps labeled Check or Check/Adjust need be performed. If parameters are noted (during a Performance Check) that fall outside stated limits, calibration is recommended. As defined under 'Introduction', some limits given are not instrument specifications, but may serve to indicate that calibration (or repair) may improve performance or reliability of the 1440.

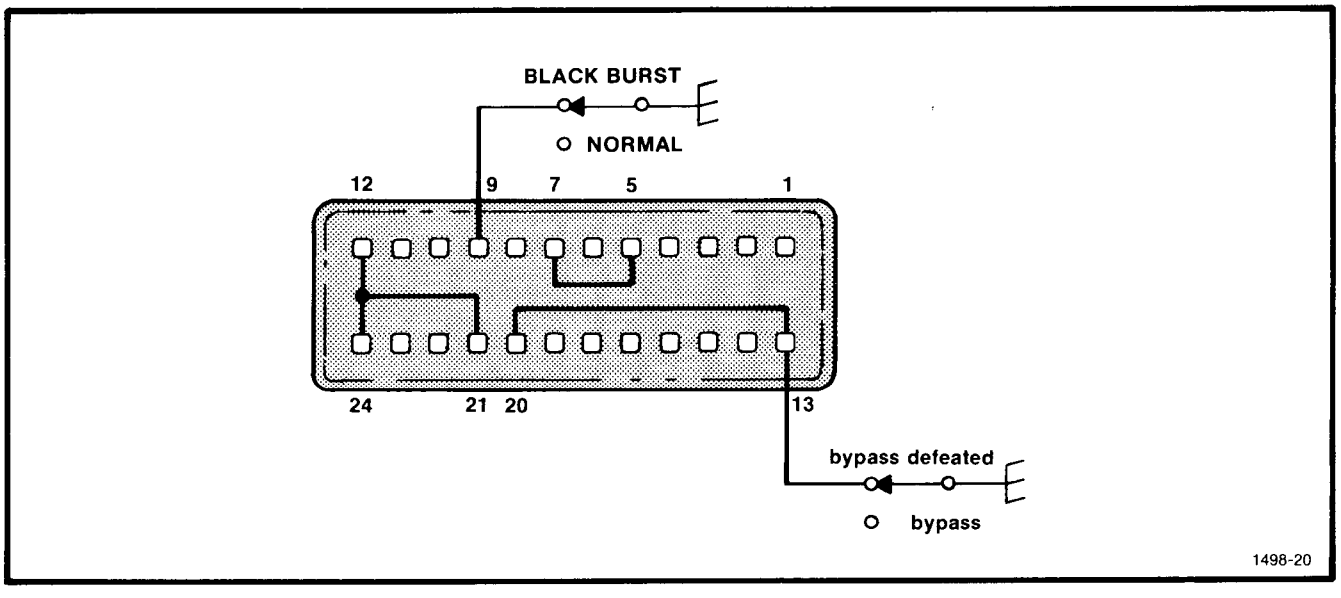

Fig. 5-1. 149A Remote plug, P9014, wired for 1440 calibration.

CALIBRATION RECORD

POWER SUPPLY

1. Check/Adjust—15 V, +15 V, and +5 V Supply Voltages, Regulation, and Ripple Page 5-7

TIMING

2. Check/Adjust Sync Noise Rejection Page 5-9

3. Check/Adjust 4H Oscillator Page 5-9

4. Check/Adjust Blanking Width Page 5-9

5. Check/Adjust Burst Pass Page 5-9

6. Check/Adjust VIR Signal Sample Gate Page 5-9

7. Adjust Chroma Rejection Page 5-10

8. Adjust Chroma Response Page 5-10

9. Adjust PEDESTAL START and DELAY Page 5-10

PROGRAM COMPENSATION

10. Preliminary Setup Page 5-10

11. Check/Adjust Corrections Page 5-12

LINEAR WAVEFORM DISTORTION

12. Check Field-Time Linear Distortion Page 5-14

13. Check Line-Time Linear Distortion Page 5-14

14. Check Short-Time Linear Distortion Page 5-15

NON-LINEAR WAVEFORM DISTORTION

15. Check Differential Gain Page 5-15

16. Check Differential Phase Page 5-15

17. Check Line-Time Non-Linear Distortion Page 5-15

INTERMODULATION AND DELAY

18. Check Chrominance-to-Luminance Intermodulation Page 5-15

19. Check Chrominance-to-Luminance Delay Page 5-15

RETURN LOSS

20. Check Input Return Loss Page 5-16

21. Check Output Return Loss Page 5-16

22. Check Bypass/Operate Return Loss Page 5-16

BYPASS DELAY

23. Adjust Delay Compensation Page 5-17

24. Check Bypass Delay Page 5-17

SPURIOUS SUBCARRIER AND RANDOM NOISE

25. Check Spurious Subcarrier Page 5-17

26. Check Random Noise Page 5-17

DEMODULATOR CONTROL

27. Setup Page 5-17

28. Check/Adjust 0-Carrier Reference Drive Start Page 5-18

29. Check/Adjust 0-Carrier Output DC Level Page 5-18

30. Check/Adjust 0-Carrier Sampling Gain Page 5-19

DEMODULATOR CONTROL (Alternate Method)

31. Additional Equipment Required Page 5-19

32. Connect Equipment Page 5-20

33. Setup Page 5-20

34. Check/Adjust 0-Carrier Reference Drive Start Page 5-21

35. Check/Adjust 0-Carrier Output DC Level Page 5-21

36. Check/Adjust 0-Carrier Sampling Gain Page 5-21

37. Check Tracking Page 5-21

38. Check ZERO-CARRIER REFERENCE DRIVE OUT Polarity Page 5-21

CALIBRATION GUIDE

The following table is intended to serve as a guide to location of the various calibration adjustments in the 1440. This may prove useful following a repair, where only a partial calibration is desired.

Table 5-1

ADJUSTMENT	CIRCUIT NUMBER	STEP NUMBER
POWER SUPPLY		
−15 V	R9851	1b
+5 V	R9801	1b
+15 V	R9831	1b
TIMING		
Sync Noise Rej	R3624	2d
4H Osc Freq	L3400	3d
Blanking Width	R3156	4e
Burst Pass	R3282	5d
Chroma Sample Start	R3534	6e
Chroma Sample Stop	R3438	6f
Luminance Gate	R3540	6i
Chroma Rej	L4378	7b
Chroma Resp	L4456-L4460	8b
PEDESTAL DELAY	R9210	9c
PEDESTAL START	R9215	9d
PROGRAM COMPENSATION		
HF Comp	C1384	10f
Filter BW	C2790-R2990	10h
Burst Phase	L1628	lld
Burst Phase	L1632	11g
Preset Master Gain	R5858	11j
Master Gain Centering	R1875	11k
Sync Centering	R1858	11n
Internal Preset Corrections		
Master Gain	R5858	11r
Setup	R5450	11r
Chroma Gain	R5854	11r
Sync Level	R5650	11r
Burst Gain	R5150	11r
Burst Phase	R5250	11r
Internal Auto Corrections		
Master Gain	R5406	11t
Setup	R5404	11t
Chroma Gain	R5800	11t
Sync Level	R5308	11t
Burst Gain	R5208	11t
Burst Phase	R5108	11t
Monitor Centering		
Master Gain	R5876	11u
Setup	R5464	11u
Chroma Gain	R5874	11u
Sync Level	R5470	11u
Burst Gain	R5172	11u
Burst Phase	R5174	11u

ADJUSTMENT	CIRCUIT NUMBER	STEP NUMBER
Phase Comp	C1580	11x
BYPASS DELAY		
Delay Line Comp	C906, C908, C924, C928 C944, C948, C968, C970 C986, C988	23d
DEMODULATOR CONTROL		
Ref Drive Start	R678	28c
DC Level	R687	29d
Gain	R688	30c
DEMODULATOR CONTROL (Alternate Method)		
Ref Drive Start	R678	34d
DC Level	R687	35c
Gain	R688	36d

PROCEDURE

Initial Equipment Connections and Control Settings

Setup (connections are also shown in Fig. 5-2)

a. Connect a black burst signal from the sync generator to the video signal source Black Burst input. Terminate the other Black Burst loop-thru input in 75 Ω.

Wire the video signal source Remote Plug (P9014) for Bypass Defeat and Black Burst Sync as shown in Fig. 5-1.

Connect the video signal source Full Field Test Sig Out to the video signal source Prog Line In.

b. Connect the video signal source Program Line Out to the vectorscope Ch B Input. Connect the vectorscope Ch B loop-thru to the waveform monitor B Input. Terminate the wavefrom monitor B Input loop-thru in 75 Ω.

c. Connect the video signal source Program Monitor Out to the 1440 PROGRAM IN. Connect the 1440 PROGRAM OUT to the vectorscope Ch A Input. Connect the vectorscope Ch A loop-thru to the waveform monitor A Input. Terminate the waveform monitor A Input loop-thru in 75 Ω.

d. Connect the video signal source CW Subcarrier Out to the vectorscope Ext CW ϕ Ref Input. Terminate the vectorscope Ext CW ϕ Ref loop-thru in 75 Ω. Connect the video signal source Comp Sync Out to the vectorscope Ext Sync Input. Connect the vectorscope Ext Sync loop-thru to the waveform monitor Ext Sync Input. Terminate the waveform monitor Ext Sync loop-thru in 75 Ω.

e. Connect the remote control unit and remote monitor unit to the 1440 REMOTE jack, J9010.

f. Remove the top and bottom covers from the 1440.

g. Control Settings:

Waveform Monitor

Input	A, DC CPL'D
Volts Full Scale	1.0
Response	Flat
DC Restorer	Fast, Back Porch
Display	10 μs/Div
Mag μs/Div	Off
Sync	Ext (Always A) AFC
Oper/Cal	Oper

Vectorscope

Display Selector	Ch A, Aϕ, Full Field
Function Selector	Vector
Channel A & B Gain	75%, Cal
ϕ Ref	Ext
Sync	Ext

Video Signal Source

Program Control	Unity Gain, Preview, Local
Full Field Sig	Flat Field
APL	Variable
Sync Source	Down (Black Burst)

Test Oscilloscope

Input	+Input, dc
Volts/Div	1 mV
BW	Full
Time/Div	10 ms
Triggering	Int, ac, Auto

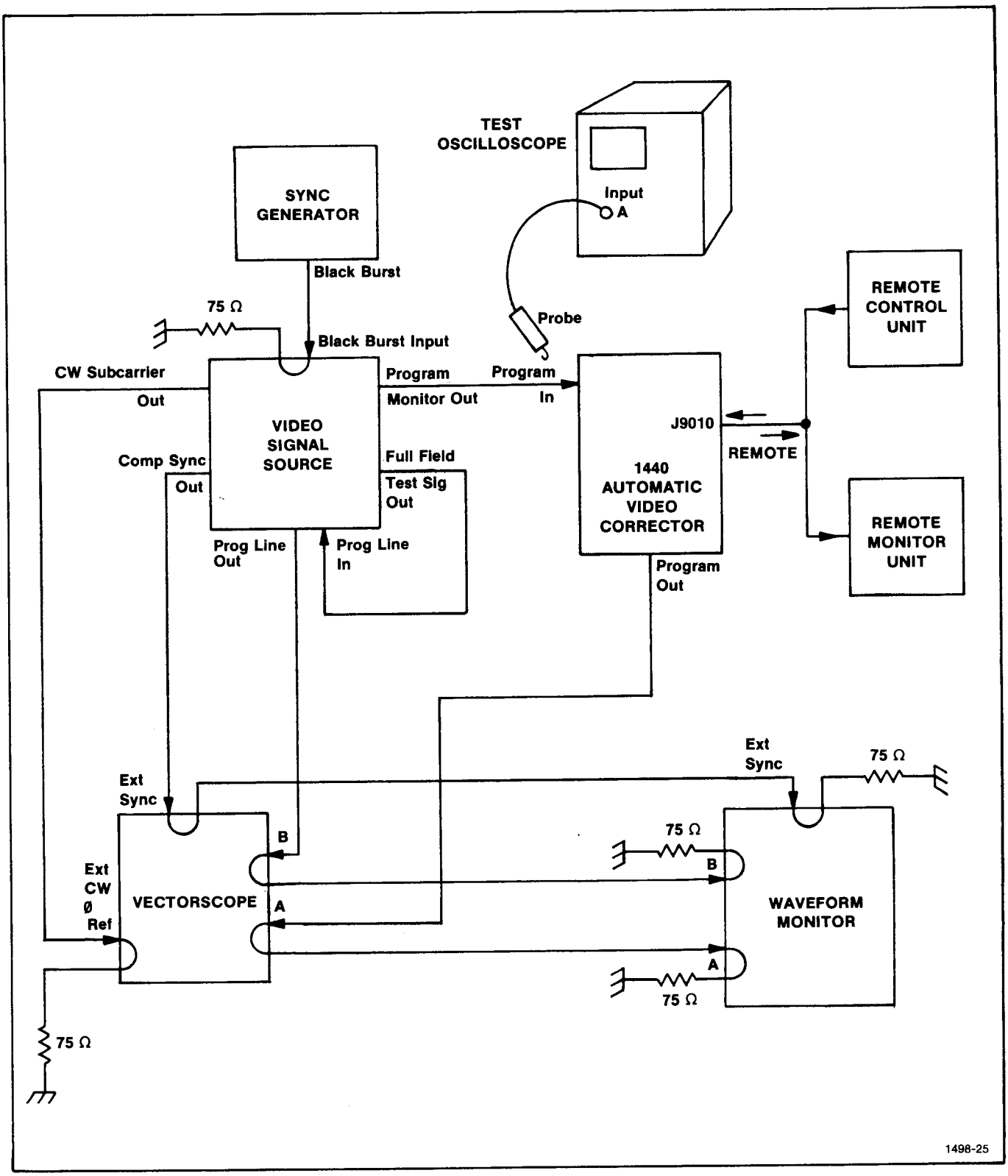

Fig. 5-2. Equipment connections for initial calibration setup.

Remote Control Unit

Manual/Auto	Manual
Operate/Bypass	Operate

h. Check for the proper 1440 Line Voltage fuse (see the Replaceable Electrical Parts list).

i. Connect the voltage control unit to an ac power outlet. Connect the 1440 ac power cord to the output of the voltage control unit, and set the voltage control unit output to 115 Vac.

j. Turn on all equipment and allow to warm up to normal operating temperature (approximately 10 minutes) before proceeding.

POWER SUPPLY

1. Check/Adjust −15 V, +15 V, and +5 V Supply Voltages, Regulation, and Ripple

a. CHECK— −15 V, +15 V, and +5 V supplies for accuracy, as listed in Table 5-2. (Connect a dc voltmeter to ground and to the individual test points as shown in Fig. 5-3).

ADJUST— −15 V, +15 V, and +5 V supplies (in that order) to proper voltages (adjustment locations are shown in Fig. 5-3).

c. CHECK— −15 V, +15 V, and +5 V supplies for regulation while varying the output of the voltage control unit between 103.5 Vac and 126.5 Vac (115 V ±10%). Voltages should stay within the accuracies as listed in Table 5-2.

d. CHECK—ripple of the −15 V, +15 V, and +5 V supplies (connect the test oscilloscope via a 1X probe to each test point in turn). Ripple content should be 10 mV peak-to-peak or less while the voltage control unit output is varied between 103.5 Vac and 126.5 Vac.

e. Disconnect the voltage control unit. Connect the 1440 ac power cord directly to a suitable power source.

Table 5-2

POWER SUPPLY ADJUSTMENT LOCATIONS

Supply	Test Point	Accuracy	Adjust
−15 V	P9852	−14.85 to −15.15 Volts	R9851 (−15 V)
+5 V	P9802	4.95 to 5.05 Volts	R9801 (+5 V)
+15 V	P9832	14.85 to 15.15 Volts	R9831 (+15 V)

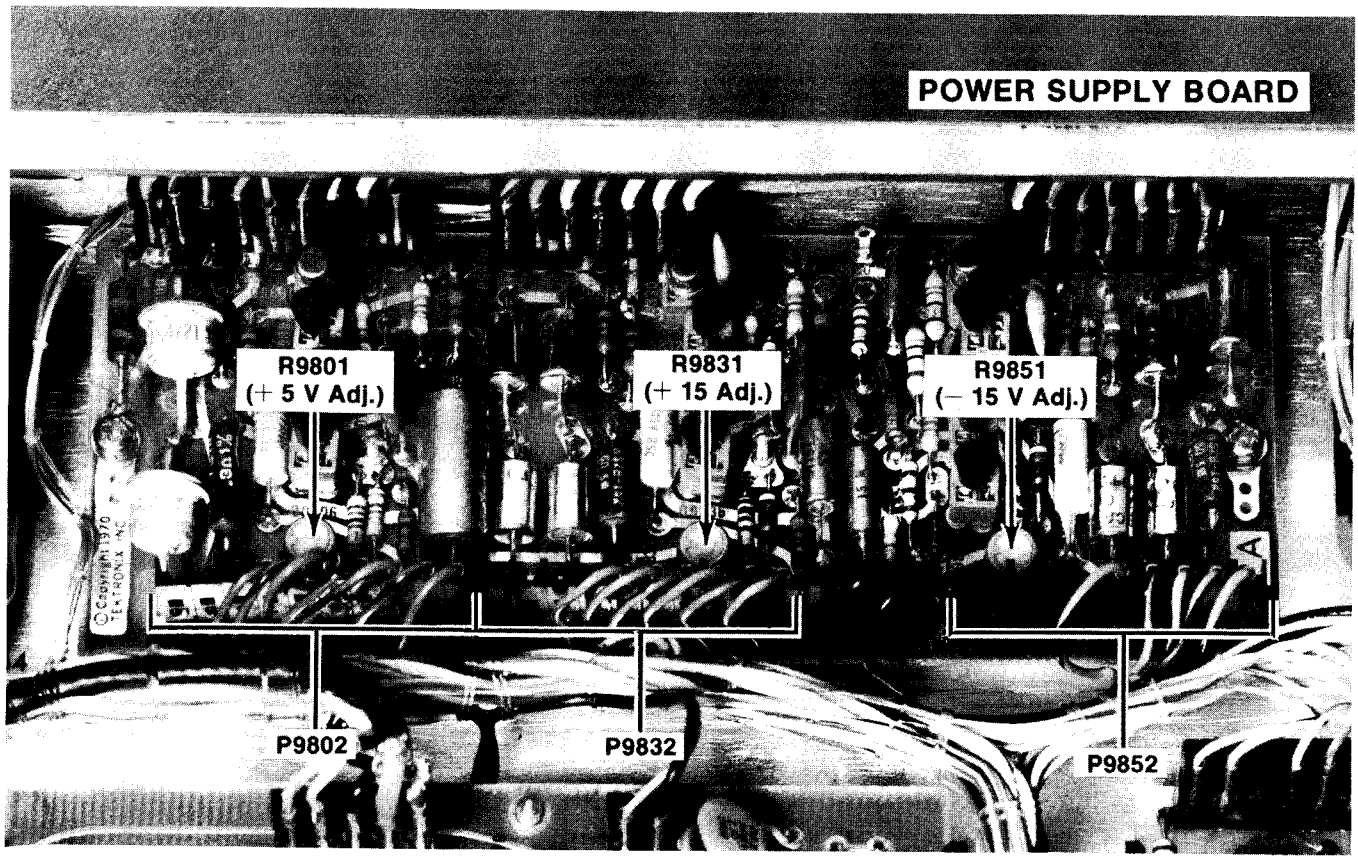

Fig. 5-3. Power Supply adjustment locations.

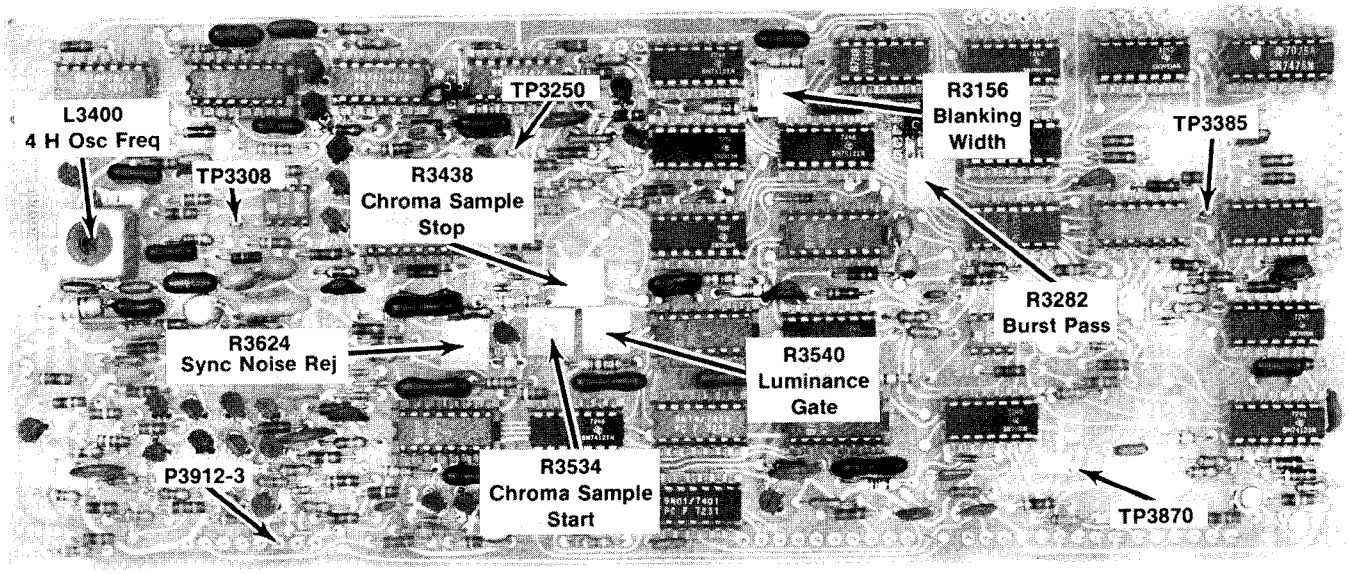

TIMING BOARD

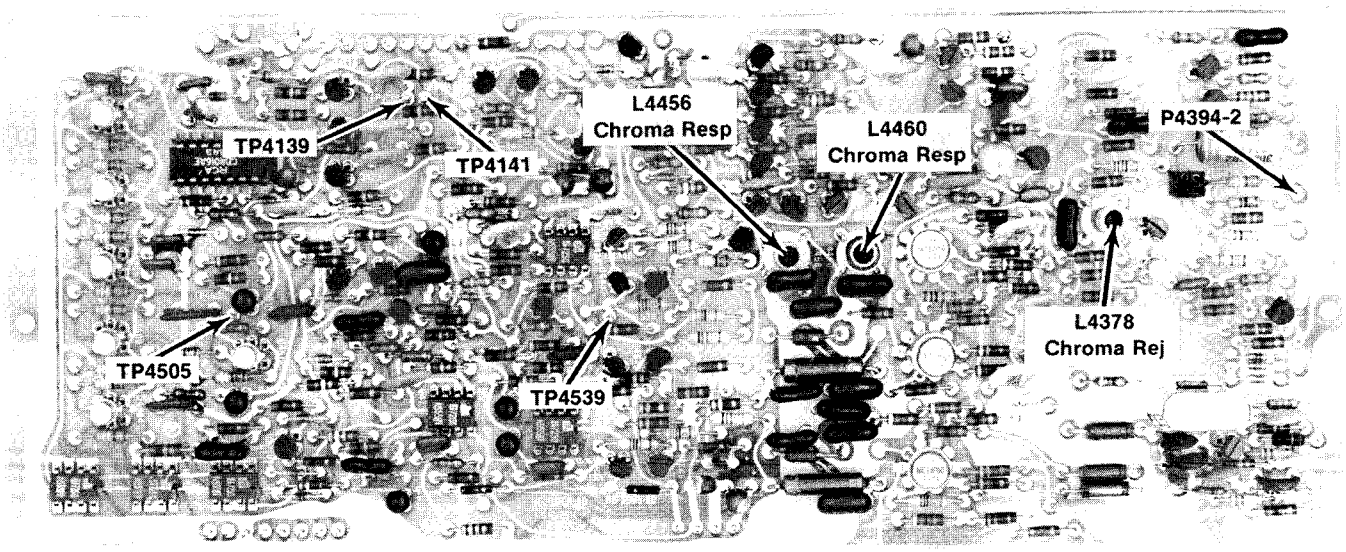

DECODER BOARD

1498-15

Fig. 5-4. Timing and Decoder boards, adjustment locations.

TIMING

Timing adjustments and test point locations are shown on the Timing and Decoder boards in Fig. 5-4.

2. Check/Adjust Sync Noise Rejection

a. Connect a 10X probe from the test oscilloscope to TP3250 on the 1440 Timing Board.

b. Set the test oscilloscope deflection factor to .5 V/div (includes 10X attenuation of probe) and the sweep rate to .5 μs/div.

c. CHECK—width of the Sync Noise Reject pulse. Should be 4 μs within 0.2 μs.

d. ADJUST—R3624 (Sync Noise Rej) for a pulse width of 4 μs.

3. Check/Adjust 4H Oscillator

a. Connect the 10X probe from the test oscilloscope to TP3308 on the 1440 Timing board.

b. Set the test oscilloscope deflection factor to .2 V/div (includes 10X attenuation of probe). Check that the input coupling is set to dc.

c. CHECK—voltage at variable voltage capacitance in 4H Oscillator circuit. Should be 0 V within 0.5 V.

d. ADJUST—L3400 (4H Osc. Freq.) on the 1440 Timing board for 0 Vdc.

4. Check/Adjust Blanking Width

a. Connect the 10X probe from the test oscilloscope to TP3385 on the 1440 Timing board.

b. Set the test oscilloscope sweep rate to 5 μs/div.

c. Set the PEDESTAL DELAY and START controls on the 1440 front panel to midrange.

d. CHECK—width of blanking pulse should be 11 μs, within 1 μs.

e. ADJUST—R3156 (Blanking Width) for a pulse width of 11 μs.

5. Check/Adjust Burst Pass

a. Connect the 10X probe from the test oscilloscope to P3912-3 (output of the Timing board Sync Stripper). Position the leading edge of the horizontal sync pulse to a convenient reference point on the test oscilloscope graticule.

b. Move the 10X probe to TP3870.

c. CHECK—that the trailing edge of the displayed pulse is 8.5 μs within 0.5 μs from the established reference point.

d. ADJUST—R3282 (Burst Pass) so that the trailing edge of the displayed pulse is 8.5 μs from the established reference point.

6. Check/Adjust VIR Signal Sample Gate

a. Connect the 10X probe from the test oscilloscope to P4394-2 on the 1440 Decoder board. Set the test oscilloscope sweep rate to 10 μs/div.

b. Position the leading edge of the VIR signal horizontal sync pulse to a convenient reference point on the test oscilloscope graticule. (See Fig. 5-5).

c. Move the 10X probe to TP4141 on the 1440 Decoder board.

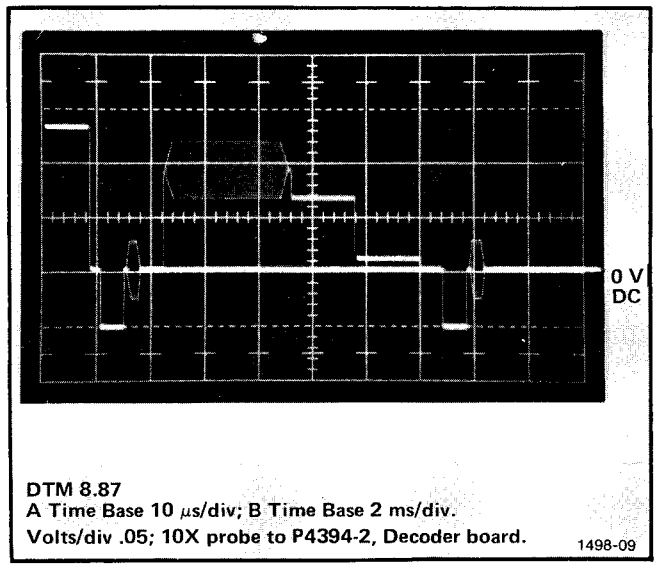

Fig. 5-5. VIR Signal as seen at P4394-2.

d. CHECK—position and width of VIR signal sample. The leading edge of the displayed pulse should be 17 μs within 1 μs from the established reference point, and the trailing edge of the pulse should be 30 μs within 1 μs from the established reference point.

e. ADJUST—R3534 (Chroma Sample Start) on the 1440 Timing board so that the leading edge of the displayed pulse is 17 μs from the established reference point.

f. ADJUST—R3438 (Chroma Sample Stop) on the 1440 Timing board so that the trailing edge of the displayed pulse is 30 μs from the established reference point.

g. Move the 10X probe to TP4139 on the 1440 Decoder board.

h. CHECK—position of the trailing edge of the Luminance Gate signal. The trailing edge of the displayed pulse should be 46 μs within 1 μs from the established reference point.

i. ADJUST—R3540 (Luminance Gate) on the 1440 Timing board so that the trailing edge of the displayed pulse is 46 μs from the established reference point.

7. Adjust Chroma Rejection

a. Connect the 10X probe from the test oscilloscope to TP4505 on the 1440 Decoder board.

b. ADJUST—L4378 (Chroma Rej) on the 1440 Decoder board for minimum chroma on the 70 IRE VIR signal pedestal.

8. Adjust Chroma Response

a. Connect the 10X probe from the test oscilloscope to TP4539 on the 1440 Decoder board.

b. ADJUST—L4456 and L4460 (Chrom Resp) on the 1440 Decoder board for best peak response of the demodulated VIR signal burst and chroma.

9. Adjust PEDESTAL START and DELAY

a. Program the video signal source for a 10% APL, Flat Field signal.

b. Set the remote control unit Manual Setup control so that the setup level is even with the blanking level as viewed on the waveform monitor.

c. ADJUST—PEDESTAL DELAY on the 1440 front panel for minimum aberrations on the video line, approximately 62 μs from the leading edge of horizontal sync.

d. ADJUST—PEDESTAL START for minimum aberrations on the video line, approximately 11 μs from the leading edge of horizontal sync.

e. Program the video signal source for a 0 APL Flat Field signal.

f. Set the remote control unit Manual Setup control for a flat blanking level.

PROGRAM COMPENSATION

Adjustment locations on the Processing, Filter, and Error Amp boards are shown in Fig. 5-7 and 5-8.

10. Preliminary Setup

a. Set the waveform monitor Input switch to A-B and the video signal source APL Variable switch to 100.

b. Set the remote control unit Manual Master Gain control for correct 1440 output amplitude. (See Fig. 5-6).

c. Set the waveform monitor Input switch to A and the video signal source Full Field Sig switch to Sin^2 Pulse and Bar.

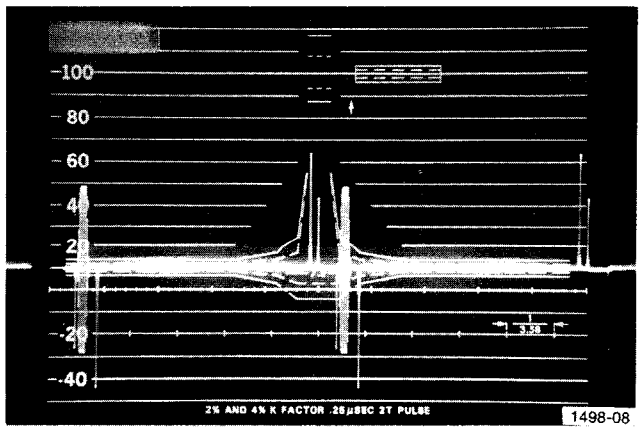

Fig. 5-6. Remote Control Unit Master Gain properly adjusted. Waveform Monitor in A-B.

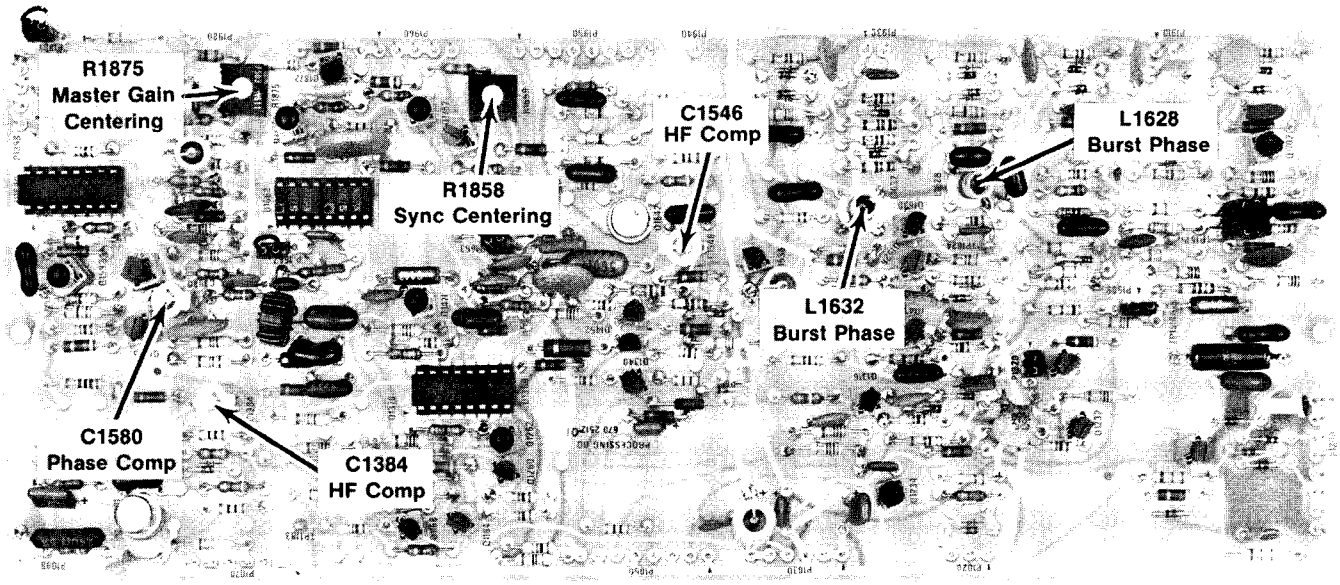

PROCESSING BOARD

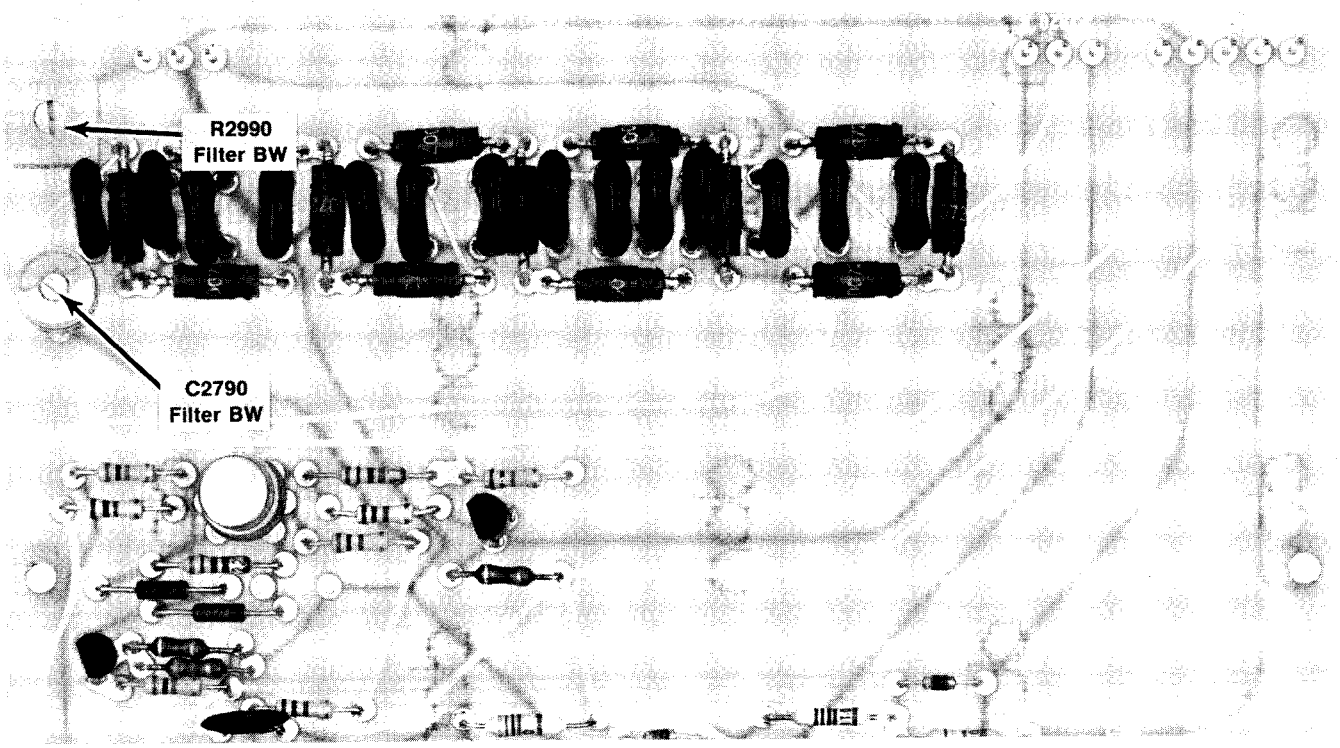

FILTER BOARD

1498-29

Fig. 5-7. Processing and Filter adjustment locations.

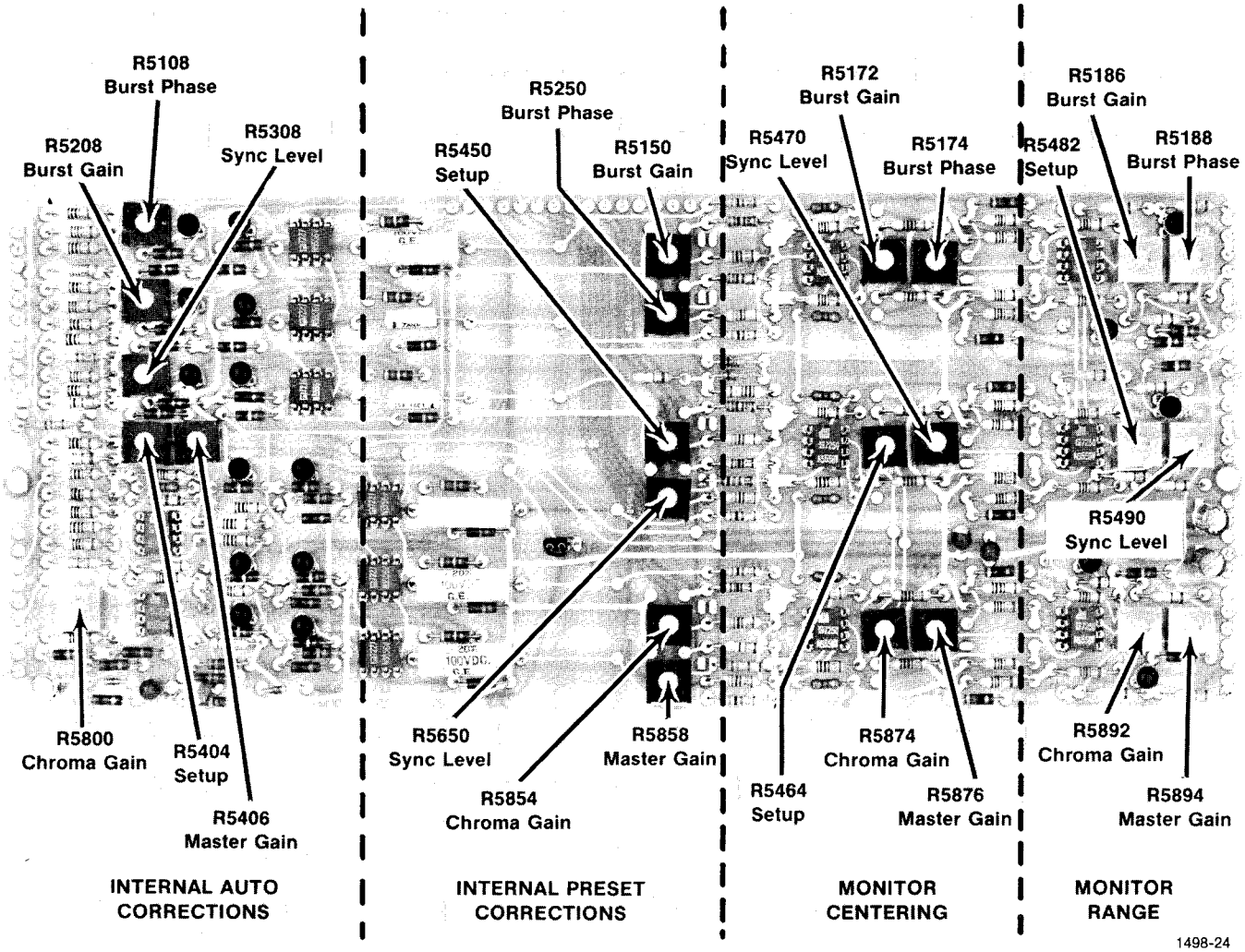

Fig. 5-8. Error Amplifier adjustment locations.

d. Set the remote control unit Manual Chroma Gain for minimum preshoot on the T pulse in the Sin^2 Pulse and Bar signal.

e. Set the video signal source Full Field Sig switch to Multiburst.

f. ADJUST—C1384 (HF Comp) on the 1440 Processing board so that the top of the 4.1 MHz Multiburst packet is equal in amplitude to the white bar.

g. Set the video signal source Full Field Sig switch to Sin^2 Pulse and Bar.

h. ADJUST—C2790 and R2990 (Filter BW) on the 1440 Filter board for best response of the T pulse in the Sin^2 Pulse and Bar signal.

i. These preliminary adjustments interact; repeat as necessary for best T pulse response and amplitude.

11. Check/Adjust Corrections

a. Connect the video signal source Program Monitor output directly to the vectorscope Ch A input. Set the vectorscope Ch A Gain controls so that the burst tip is exactly on the vectorscope graticule edge, with Remote Burst Phase centered and the burst vector set to 0° with the vectorscope Ch A Phase control. Connect the video signal source Program Monitor output to the 1440 PROGRAM IN; connect the 1440 PROGRAM OUT to the vectorscope Ch A input.

b. Set the remote control unit Manual Burst Phase control so that the burst vector is clockwise 20°.

c. CHECK—that the burst tip is approximately on the vectorscope graticule egde.

d. ADJUST—L1628 (Burst Phase) on the 1440 Processing board so that the burst tip is exactly on the vectorscope graticule edge.

e. Set the remote control unit Manual Burst Phase control so that the burst vector is counterclockwise 20°.

f. CHECK—that the burst tip is approximately on the vectorscope graticule edge.

g. ADJUST—L1632 (Burst Phase) on the 1440 Processing board so that the burst tip is exactly on the vectorscope graticule edge.

h. Set the remote control unit Manual Burst Phase control to 0.

i. Set the remote control unit Manual Master Gain control for minimum signal amplitude.

j. ADJUST—R5858 (Preset Master Gain) on the 1440 Error Amps board to midrange.

k. ADJUST—R1875 (Master Gain Centering) on the 1440 Processing board for 20 IRE units signal amplitude.

l. Set the remote control unit Manual Master Gain control for 140 IRE units signal amplitude.

m. Set the remote control unit Manual Sync Gain control for minimum sync amplitude. Set R5650 (Preset Sync) on the 1440 Error Amps board to midrange.

n. ADJUST—R1858 (Sync Centering) on the 1440 Processing board for minimum sync amplitude without polarity reversal.

o. Set the remote control unit Manual Sync Gain control for 40 IRE units sync amplitude.

p. Disconnect the 1440 ac power cord from the ac power source. Remove the two Remote Voltage fuses, F5691 and F5692, on the 1440 Error Amps board. Reconnect the 1440 ac power cord to the ac power source.

q. Set the waveform monitor Input switch to A-B.

r. ADJUST—internal Preset corrections on the 1440 Error Amps board as follows in Table 5-3.

s. Set the remote control unit Manual/Auto switch to Auto.

t. ADJUST—internal Auto corrections on the 1440 Error Amps board as follows in Table 5-4.

u. ADJUST—1440 Monitor Centering controls on the Error Amps board as follows in Table 5-5.

Table 5-3

INTERNAL PRESET CORRECTIONS

Control	Signal Element Controlled	Notes
R5858	Master Gain	Set for null on waveform monitor, differential operation.
R5450	Setup	Set for null on waveform monitor, differential operation.
R5854	Chroma Gain	Set for flat bottom 12.5 T pulse on waveform monitor, single channel operation.
R5650	Sync Level	Set for null on waveform monitor, differential operation.
R5150	Burst Gain	Set to overlay burst and VIR signal amplitude on vectorscope.
R5250	Burst Phase	Set to overlay burst and VIR signal phase on vectorscope.

Table 5-4

INTERNAL AUTO CORRECTIONS

Control	Signal Element Controlled	Notes
R5406	Master Gain	Set for null on waveform monitor, differential operation.
R5404	Setup	Set for null on waveform monitor, differential operation.
R5800	Chroma Gain	Set for flat bottom 12.5 T pulse on waveform monitor, single channel operation.
R5308	Sync Level	Set for null on waveform monitor, differential operation.
R5208	Burst Gain	Set to overlay burst and VIR signal amplitude on vectorscope.
R5108	Burst Phase	Set to overlay burst and VIR signal phase on vectorscope.

Table 5-5

MONITOR CENTERING ADJUSTMENTS

Control	Signal Element Controlled	Connect 10X Probe To	Adjust For
R5876	Master Gain	TP5897	O V dc on test oscilloscope, or if used with remote monitor, set to zero.
R5464	Setup	TP5382	
R5874	Chroma Gain	TP5687	
R5470	Sync Level	TP5682	
R5172	Burst Gain	TP5190	
R5174	Burst Phase	TP5282	

v. Disconnect the 1440 ac power cord from the ac power source. Replace the two Remote Voltage fuses on the 1440 Error Amps board. Reconnect the 1440 ac power cord to the ac power source.

w. Vary the remote control unit Master Gain control full range.

x. ADJUST—C1580 (Phase Comp) on the 1440 Processing board for minimum phase shift as the Remote Master Gain control is varied full range.

LINEAR WAVEFORM DISTORTION

12. Check Field-Time Linear Distortion

a. Connect the video signal source Program Line Out to the test oscilloscope B input (− Input). Set the video signal source Full Field Sig switch to Field Sq Wave.

b. Connect the video signal source Program Monitor Out to the 1440 PROGRAM IN.

c. Connect the 1440 PROGRAM OUT to the test oscilloscope A Input (+ Input).

d. Set the test oscilloscope for differential operation, a sweep rate of 2 ms/div, and a deflection factor of 10 mV/div.

e. CHECK—that differentially-measured tilt of the Field Sq Wave is 3.5 mV or less.

13. Check Line-Time Linear Distortion

a. Set the video signal source Full Field Sig switch to Sin^2 Pulse and Bar, and the test oscilloscope sweep rate to 10 μs/div.

b. CHECK—that tilt of the 26 μs bar is 3.5 mV or less.

14. Check Short-Time Linear Distortion

a. Set the test oscilloscope to display the A Input (+ Input) signal only.

b. CHECK—that overshoot of the T pulse in the Sin^2 Pulse and Bar signal is 14.0 mV or less. If this limit cannot be met, repeat Step 10 under Program Compensation.

c. Program the video signal source to produce a 2T pulse in the Sin^2 Pulse and Bar signal.

d. CHECK—that overshoot of the 2T pulse is 7.0 mV or less.

NON-LINEAR WAVEFORM DISTORTION

15. Check Differential Gain

a. Connect the 1440 PROGRAM OUT to the vectorscope Ch A input and the video signal source Program Line Out to the vectorscope Ch B input.

b. Program the video signal source for a linearity ramp waveform, modulated with 140 mV of subcarrier.

c. Press the vectorscope Ch A, Ch B, Full Field, Aϕ / Bϕ Alt, and Diff Gain buttons. Set the vectorscope Ch A and Ch B Gain switches to Max Gain.

d. Set the vectorscope Ch B Gain controls so that the difference in the slope of the lines can be measured.

e. CHECK—that differential gain is 0.5% or less.

16. Check Differential Phase

a. Press the vectorscope Diff Phase button.

b. Set the vectorscope Ch A and Ch B Phase controls so that when the vectorscope Calibrated Phase control is rotated, both displays move in the same direction.

c. Set the vectorscope Ch A Phase control so that the point of maximum separation between the Ch A traces just touches.

d. Set the vectorscope Ch B Phase control so that the point of minimum separation between the Ch B traces just touches.

e. Obtain a reference point between the graticule and the point of maximum separation of the Ch A display.

f. Set the vectorscope Calibrated Phase control so that the point of maximum separation of the Ch B display reaches the established reference point.

g. CHECK—that differential phase is 0.5° or less.

17. Check Line-Time Non-Linear Distortion

a. Set the video signal source Full Field Sig controls for a five-step unmodulated staircase.

b. Set the waveform monitor Input switch to A and Volts Full Scale to 1.0.

c. CHECK—that the difference in riser amplitude between any two steps is 0.5 IRE units or less. Subtract any error that may be in the video signal source.

INTERMODULATION AND DELAY

18. Check Chrominance-to-Luminance Intermodulation

a. Set the video signal source Full Field Sig controls for a modulated pedestal.

b. Set the waveform monitor Response switch to Low Pass. Connect the continuous random noise measurement weighting network in series with the incoming signal.

c. CHECK—that the change in pedestal level caused by intermodulation is 0.5 IRE units or less.

d. Remove the continuous random noise measurement weighting network.

19. Check Chrominance-to-Luminance Delay

a. Set the video signal source Full Field Sig switch to Sin^2 Pulse and Bar.

b. Set the waveform monitor Response switch to Flat and Volts Full Scale to 0.5.

c. CHECK—that chrominance-to-luminance delay at the baseline of the 12.5 T modulated pulse is 5 ns or less. (Any sine wave shape of the 12.5 T pulse chrominance should be 1 IRE unit peak-to-peak or less.)

RETURN LOSS

20. Check Input Return Loss

a. Connect the return loss bridge to the test oscilloscope vertical inputs. Set the test oscilloscope for differential operation and deflection factor of 50 mV/div.

b. Connect the constant amplitude signal generator through the 50 Ω-to75 Ω Minimum Loss Attenuator to the return loss bridge input. Set the constant amplitude signal generator to 50 kHz.

c. Remove the 75 Ω termination from the unknown arm of the return loss bridge.

d. Set the constant amplitude signal generator for 5 divisions display amplitude on the test oscilloscope.

e. Connect the 75 Ω termination to the return loss bridge unknown arm. Set the test oscilloscope for 1 mV/div deflection factor. The test oscilloscope display should be 1 mV or less in amplitude. If it is more than 1 mV in amplitude, adjust the return loss bridge Balance control.

f. Remove the 75 Ω termination from the return loss bridge unknown arm. Connect the return loss bridge unknown arm to the 1440 PROGRAM IN connector and the 75 Ω termination to the 1440 PROGRAM OUT connector.

g. CHECK—that input return loss is at least −46 dB (1.25 mV or less) from 50 kHz to 5 MHz.

h. Move the return loss bridge unknown arm to the 1440 EXTERNAL CORRECTION INPUT connector.

i. CHECK—that return loss is at least −46 dB (1.25 mV or less) from 50 kHz to 5 MHz.

21. Check Output Return Loss

a. Connect the return loss bridge Unknown arm to the 1440 PROGRAM MONITOR OUT connector.

b. CHECK—that return loss is at least −36 dB (7.9 mV or less) from 50 kHz to 5 MHz.

22. Check Bypass/Operate Return Loss

a. Set the remote control unit Operate/Bypass switch to Bypass.

b. Connect the return loss bridge Unknown arm to the 1440 PROGRAM IN connector and the 75 Ω termination to the 1440 PROGRAM OUT connector.

c. CHECK—that return loss for the bypass mode is at least −40 dB (2.5 mV or less) from 50 kHz to 5 MHz.

d. Set the remote control unit Operate/Bypass switch to Operate.

e. CHECK—that return loss for the operate mode is at least −46 dB (1.25 mV or less) from 50 kHz to 5 MHz.

f. Set the remote control unit Operate/Bypass switch to Bypass.

g. Move the return loss bridge Unknown arm to the 1440 PROGRAM OUT connector and the 75 Ω termination to the 1440 PROGRAM IN connector.

h. CHECK—that return loss for the bypass mode is at least −36 dB (7.9 mV or less) from 50 kHz to 5 MHz.

i. Set the remote control unit Operate/Bypass switch to Operate.

j. CHECK—that return loss for the operate mode remains the same; at least −36 dB (7.9 mV or less) from 50 kHz to 5 MHz.

k. If return loss does not fall within limits in any of the preceding checks, proceed with Step 23, Adjust Delay Compensation.

BYPASS DELAY

Locations of Delay capacitance adjustments on the 1440 Relay board are shown in Fig. 5-9.

23. Adjust Delay Compensation

a. Remove the INTERFACE section from the 1440.

b. Connect the video signal source Program Out through the 5 MHz Low-Pass Filter to the return loss bridge input.

c. Set the video signal source Full Field Sig switch to Multiburst.

d. ADJUST—Delay capacitors on the Relay board (C906, C908, C924, C928, C944, C948, C968, C970, C986, C988) for minimum and equal amplitude of the burst packets on the Multiburst signal.

e. Repeat Steps 20, 21, and 22.

24. Check Bypass Delay

a. Press the vectorscope Ch A and Vector buttons. Rotate the vectorscope Ch A Phase control to set the burst vector at 180° on the graticule.

b. Set the remote control unit Operate/Bypass switch to Bypass.

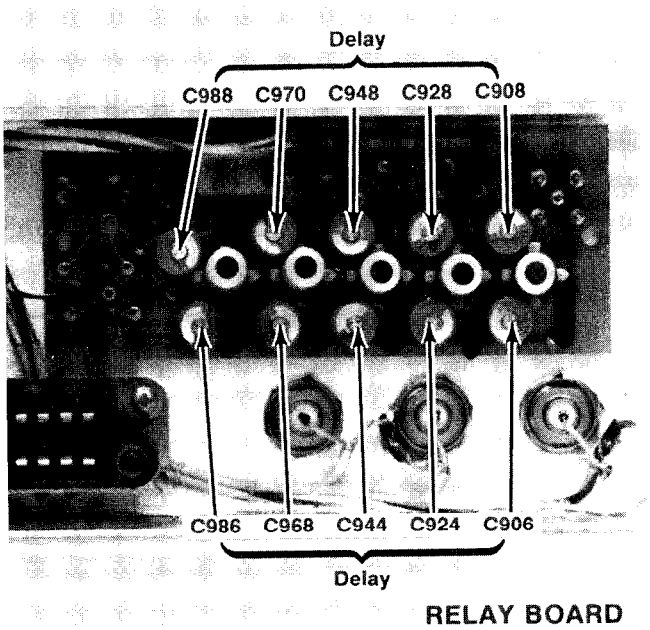

Fig. 5-9. Relay adjustment locations.

c. CHECK—that the burst vector shifts 5° or less from 180°. If the shift is excessive, select C2840 on the 1440 Processing board to minimize the shift.

SPURIOUS SUBCARRIER AND RANDOM NOISE

25. Check Spurious Subcarrier

a. Set the video signal source Full Field Sig switch to Color Test Signal.

b. Set the remote control unit Operate/Bypass switch to Bypass.

c. Connect the video signal source Program Out to the 1440 PROGRAM IN. Connect the 1440 PROGRAM MONITOR OUT to the test oscilloscope vertical input through the 3.58 MHz Bandpass Filter.

d. CHECK—that the spurious subcarrier on any video line is 0.7 mV or less. Use the test oscilloscope delayed sweep mode.

26. Check Random Noise

a. Remove the signal from the 1440 PROGRAM IN.

b. Connect the 1440 PROGRAM OUT through the 5 MHz Low-Pass Filter and a 75 Ω termination to the RMS Voltmeter.

c. CHECK—that random noise output is at least −60 dB (0.7 mV or less).

DEMODULATOR CONTROL

Locations of P664 and P669 are shown in Fig. 5-10. Location of P4384 is shown in Fig. 5-11.

27. Setup

a. Position plug-jumper P669 on the 1440 0-Carrier Reference board so that R679 is connected to P679-5. (ON).

b. Position plug-jumper P664 on the 1440 0-Carrier Reference board to select the pulse polarity required by the Demodulator to be used.

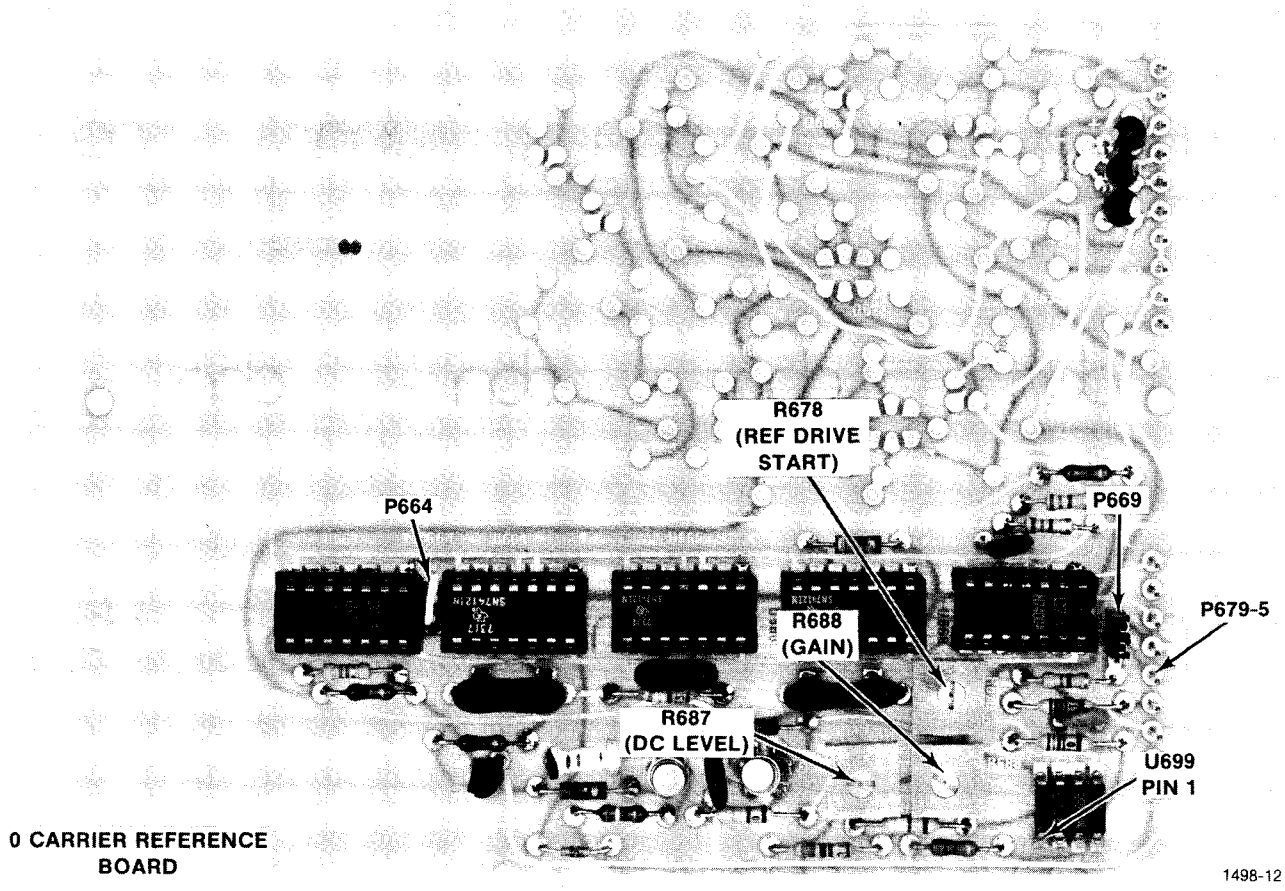

Fig. 5-10. 0-Carrier Reference adjustment locations.

c. Use plug-jumper 4384 on the 1440 Decoder board to select the EXTERNAL CORRECTION INPUT signal as input to the Decoder Sync Stripper. (EXT).

d. Use plug-jumper P3280 on the 1440 Timing board to select a video line (15 through 21) for drive. The 1440 is factory-programmed to select line 20. (See Fig. 2-14 in the Installation and Programming section of this manual.)

e. Connect the ZERO CARRIER REFERENCE DRIVE OUT to the Demodulator 0-Carrier Reference Drive input.

f. Connect the Demodulator output to the waveform monitor A Input and loop through to the 1440 EXTERNAL CORRECTION INPUT.

g. Connect the video program line to the 1440 PROGRAM IN.

h. Connect the 1440 PROGRAM OUT to the video transmitter.

i. Set the waveform monitor horizontal Display to 2 Field and the Mag μs/div to X25.

28. Check/Adjust 0-Carrier Reference Drive Start

a. Position the waveform monitor display to view the 0-Carrier Reference pulse.

b. CHECK—that the start of the 0-Carrier Reference pulse is 12 μs within 1 μs from the leading edge of horizontal sync.

c. ADJUST—R678 (Ref Drive Start) on the 1440 0-Carrier Reference board to set the start of the 0-Carrier Reference pulse to occur 12 μs from the leading edge of horizontal sync.

29. Check/Adjust 0-Carrier Output DC Level

a. Set the Demodulator gain for a 0-Carrier Reference pulse amplitude of 120 IRE units.

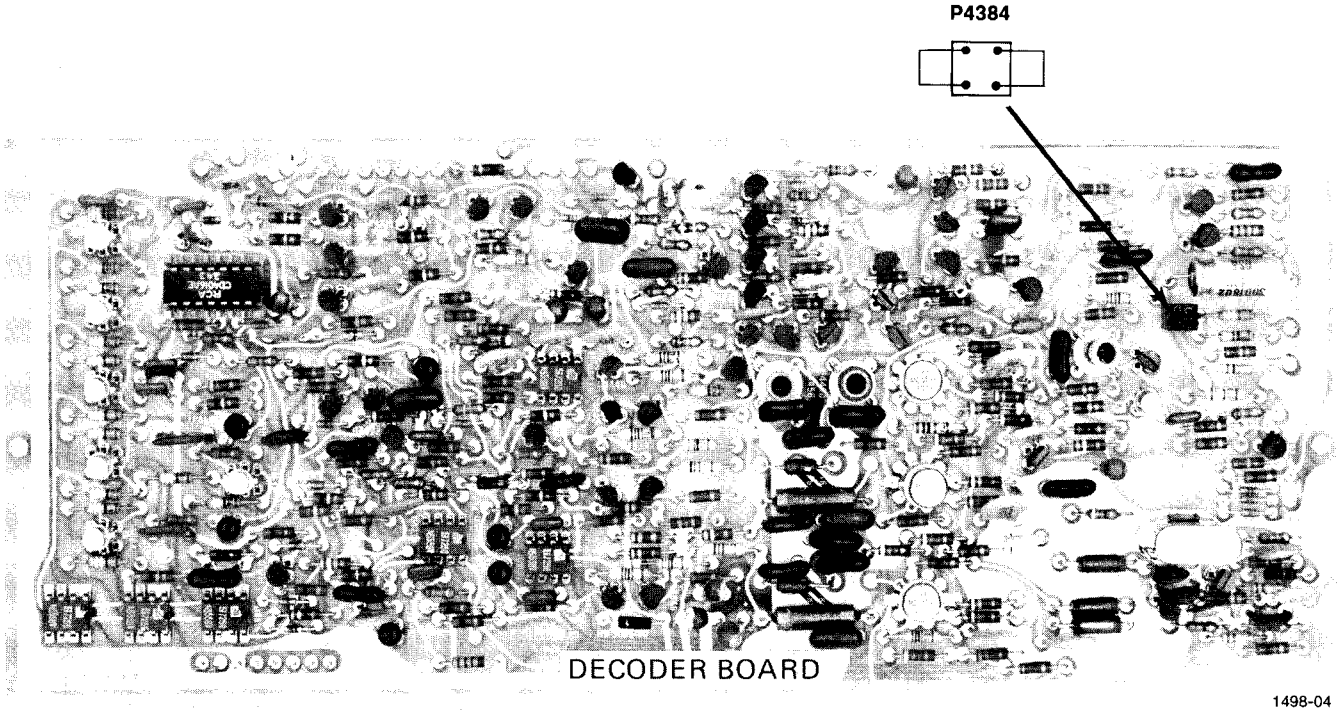

Fig. 5-11. P4384 connected for External Correction Input operation.

b. Connect the 10X probe from the test oscilloscope vertical input to P679-5 on the 1440 0-Carrier Reference board. (See Fig. 5-10.) Set the test oscilloscope deflection factor to .5 V/div (includes 10X attenuation of the probe).

c. CHECK—the output level of the 0-Carrier Sampling circuit. The dc level should be approximately 0 V, as observed on the test oscilloscope.

d. ADJUST—R687 (DC Level) on the 1440 0-Carrier Reference board for 0 V, as observed on the test oscilloscope.

30. Adjust 0-Carrier Sampling Gain

a. Set the Demodulator gain for a 0-Carrier Reference pulse amplitude of 100 IRE units.

b. CHECK—that the VIR signal IRE level to 0-Carrier Reference pulse ratio is correct (41.7 : 100 IRE).

c. ADJUST—R688 (Gain) so that the VIR signal 50 IRE level is 41.7 IRE units.

DEMODULATOR CONTROL (Alternate Method)

This alternate procedure for calibrating the Demodulator Control function does not require a demodulator and transmitter.

31. Additional Equipment Required.

a. 0-Carrier Reference Pulse Generator. Capable of producing a half-line pulse on any VITS line in the vertical interval of either or both fields, variable from at least 80 IRE units to 120 IRE units. For example, a TEKTRONIX 1430 Random Noise Measuring Set.

b. Dual-Trace Plug-In Unit. Capable of displaying the two channels alternately or individually. Bandwidth commensurate with video measurements (flat response from dc to beyond 5 MHz). For example, a TEKTRONIX 7A18 Dual Trace Amplifier.

c. Additional 10X Probe (2 total). Tektronix Part No. 010-6105-01 (P6105 Probe).

d. 500 Ω Variable Attenuator.

32. Connect Equipment

a. Connections are shown in Fig. 5-12.

33. Setup

a. Set the controls as follows:

149A

Program Control	Preview, Local, Unity Gain

1430 (Monitoring Channel)

Noise Measurement Mode	VITS
Field	Both
Line	20
IRE	100
Gain	Cal
Weighting Filter	Out
Noise Level	Off, −0

1480 Waveform Monitor

Input	A, DC Cpld
Response	Flat
Volts Full Scale	1.0
Display	10 μs/div
Line Selector	20
Mag μs/div	Off

b. Viewing the 1480 display, adjust the 1430 Pedestal Delay control so that the pedestal on line 20 starts 12 μs from the leading edge of horizontal sync, and set the Pedestal Level for 120 IRE units pedestal amplitude. Make sure that the VIR signal 50 IRE level is exactly 50 IRE units in amplitude. Use the 1480 Volts Full Scale Variable control to set the VIR signal level if necessary.

c. Program the 1440 for precorrection operation (see Basic Precorrection Programming, Fig. 2-8, in the Installation and Programming section of this manual).

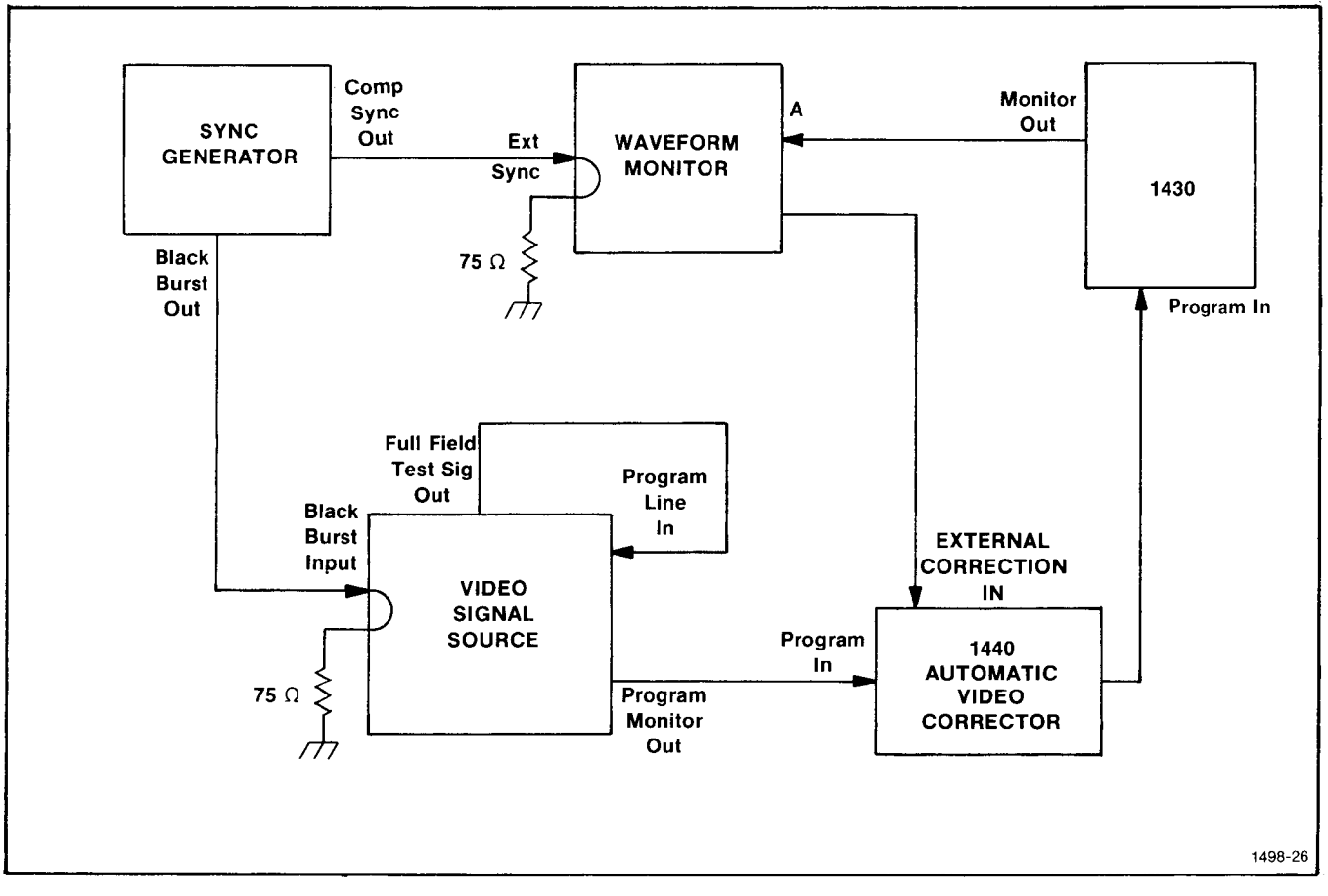

Fig. 5-12. Connections for Demodulator Control calibration (Alternate Method).

34. Check/Adjust 0-Carrier Reference Drive Start

a. Connect plug-jumper P669 to pins 1 and 2 (see Fig. 5-10). Connect a 10X probe from the test oscilloscope Ch 1 to plug-jumper P664. Connect another 10X probe from the test oscilloscope Ch 2 to P679-8.

b. Set the test oscilloscope for delayed sweep operation and alternate channel display. Set the deflection factor of both vertical channels to .2 V/div (includes probe attenuation), and the Time/div to 20 μs. Set the test oscilloscope Delay Time Multiplier to view line 20.

c. CHECK—for time coincidence of the leading edges of the two pulses as viewed on the test oscilloscope. Leading edges should be time coincident within 1 μs.

d. ADJUST—R678 (Ref Drive Start) on the 0-Carrier Reference board for time coincidence of the leading edges of the two pulses.

35. Check/Adjust 0-Carrier Output DC Level

a. Connect a 10X probe from the test oscilloscope Ch 1 to U699 pin 1, on the 0-Carrier Reference board (see Fig. 5-10).

b. CHECK—the dc level at the output of the 0-Carrier Sampling circuit for approximately 0 Vdc.

c. ADJUST—R687 (DC Level) on the 0-Carrier Reference board for 0 V.

36. Check/Adjust 0-Carrier Sampling Gain

a. Move plug-jumper P669 to pins 2 and 3 (R679 connected to P679-5).

b. Set the 1430 Pedestal Level for a pulse amplitude of 100 IRE units.

c. CHECK—VIR signal 50 IRE level for 41.7 IRE units. Set the 1430 Pedestal Level to bring the VIR signal 50 IRE level back to 50 IRE units.

d. ADJUST—R688 (Gain) so that the VIR signal 50 IRE level is at 41.7 IRE units. Set the 1430 Pedestal Level to bring the VIR signal 50 IRE level back to 50 IRE units.

37. Check Tracking

a. Connect a 10X probe from the test oscilloscope Ch 1 to P4394, pin 4 (Ext Correction In) on the 1440 Decoder board.

b. Connect the variable attenuator in series with the 1440 EXTERNAL CORRECTION INPUT.

c. CHECK—that a 5% change in amplitude of the signal into the EXTERNAL CORRECTION INPUT does not change the VIR signal amplitude, as observed on the 1480 Waveform Monitor. (Vary the input amplitude by plus and minus 5% with the variable attenuator. Use the test oscilloscope display to monitor signal amplitude settings.)

38. Check ZERO CARRIER REFERENCE DRIVE OUT Polarity

a. Connect the 10X probe from the test oscilloscope to P629-10 (ZERO CARRIER REFERENCE DRIVE OUT).

b. CHECK—for a negative-going pulse on line 20.

c. Move plug-jumper P664 to pins 2 and 3.

d. CHECK—for a positive-going pulse on line 20.

e. Move plug-jumper P664 back to pins 1 and 2.

This completes the Performance Check/Calibration Procedure for the 1440. If any repairs were made during the procedure, be sure to repeat any steps that might have been affected by the repair.

Re-program the 1440 for desired mode and operating parameters. See the Installation and Programming section of this manual for programming information.

Replace the 1440 top and bottom panel-covers.

OPTIONS

This section is meant to provide for documenting catalog options offered for the 1440. Custom modifications are negotiated and documented separately.

At the time of initial publication, there were no catalog options offered for the 1440.

REPLACEABLE ELECTRICAL PARTS

PARTS ORDERING INFORMATION

Replacement parts are available from or through your local Tektronix, Inc. Field Office or representative.

Changes to Tektronix instruments are sometimes made to accommodate improved components as they become available, and to give you the benefit of the latest circuit improvements developed in our engineering department. It is therefore important, when ordering parts, to include the following information in your order: Part number, instrument type or number, serial number, and modification number if applicable.

If a part you have ordered has been replaced with a new or improved part, your local Tektronix, Inc. Field Office or representative will contact you concerning any change in part number.

Change information, if any, is located at the rear of this manual.

SPECIAL NOTES AND SYMBOLS

X000	Part first added at this serial number
00X	Part removed after this serial number

ITEM NAME

In the Parts List, an Item Name is separated from the description by a colon (:). Because of space limitations, an Item Name may sometimes appear as incomplete. For further Item Name identification, the U.S. Federal Cataloging Handbook H6-1 can be utilized where possible.

ABBREVIATIONS

ACTR	ACTUATOR
ASSY	ASSEMBLY
CAP	CAPACITOR
CER	CERAMIC
CKT	CIRCUIT
COMP	COMPOSITION
CONN	CONNECTOR
ELCTLT	ELECTROLYTIC
ELEC	ELECTRICAL
INCAND	INCANDESCENT
LED	LIGHT EMITTING DIODE
NONWIR	NON WIREWOUND
PLSTC	PLASTIC
QTZ	QUARTZ
RECP	RECEPTACLE
RES	RESISTOR
RF	RADIO FREQUENCY
SEL	SELECTED
SEMICOND	SEMICONDUCTOR
SENS	SENSITIVE
VAR	VARIABLE
WW	WIREWOUND
XFMR	TRANSFORMER
XTAL	CRYSTAL

CROSS INDEX—MFR. CODE NUMBER TO MANUFACTURER

Mfr. Code	Manufacturer	Address	City, State, Zip
00853	SANGAMO ELECTRIC CO., S. CAROLINA DIV.	P O BOX 128	PICKENS, SC 29671
01002	GENERAL ELECTRIC COMPANY, INDUSTRIAL AND POWER CAPACITOR PRODUCTS DEPARTMENT	JOHN STREET	HUDSON FALLS, NY 12839
01121	ALLEN-BRADLEY COMPANY	1201 2ND STREET SOUTH	MILWAUKEE, WI 53204
02660	BUNKER RAMO CORP., CONNECTOR DIVISION	2801 S 25TH AVENUE	BROADVIEW, IL 60153
02777	HOPKINS ENGINEERING COMPANY	12900 FOOTHILL BLVD.	SAN FERNANDO, CA 91342
03508	GENERAL ELECTRIC COMPANY, SEMI-CONDUCTOR PRODUCTS DEPARTMENT	ELECTRONICS PARK	SYRACUSE, NY 13201
04713	MOTOROLA, INC., SEMICONDUCTOR PROD. DIV.	5005 E MCDOWELL RD,PO BOX 20923	PHOENIX, AZ 85036
05397	UNION CARBIDE CORPORATION, MATERIALS SYSTEMS DIVISION	11901 MADISON AVENUE	CLEVELAND, OH 44101
07263	FAIRCHILD SEMICONDUCTOR, A DIV. OF FAIRCHILD CAMERA AND INSTRUMENT CORP.	464 ELLIS STREET	MOUNTAIN VIEW, CA 94042
08806	GENERAL ELECTRIC CO., MINIATURE LAMP PRODUCTS DEPARTMENT	NELA PARK	CLEVELAND, OH 44112
09353	C AND K COMPONENTS, INC.	103 MORSE STREET	WATERTOWN, MA 02172
12954	SIEMENS CORPORATION, COMPONENTS GROUP	8700 E THOMAS RD, P O BOX 1390	SCOTTSDALE, AZ 85252
24546	CORNING GLASS WORKS, ELECTRONIC COMPONENTS DIVISION	550 HIGH STREET	BRADFORD, PA 16701
24931	SPECIALTY CONNECTOR CO., INC.	3560 MADISON AVE.	INDIANAPOLIS, IN 46227
27014	NATIONAL SEMICONDUCTOR CORP.	2900 SEMICONDUCTOR DR.	SANTA CLARA, CA 95051
32159	WEST-CAP ARIZONA	2201 E. ELVIRA ROAD	TUCSON, AZ 85706
32293	INTERSIL, INC.	10900 N. TANTAU AVE.	CUPERTINO, CA 95014
32436	SYSCON INTERNATIONAL, INC.	205 SYCAMORE ST.	SOUTH BEND, IN 46622
32997	BOURNS, INC., TRIMPOT PRODUCTS DIV.	1200 COLUMBIA AVE.	RIVERSIDE, CA 92507
50522	MONSANTO CO., ELECTRONIC SPECIAL PRODUCTS	3400 HILLVIEW AVENUE	PALO ALTO, CA 94304
53944	ELT INC., GLOW LITE DIVISION	BOX 698	PAULS VALLEY, OK 73075
56289	SPRAGUE ELECTRIC CO.		NORTH ADAMS, MA 01247
71400	BUSSMAN MFG., DIVISION OF MCGRAW-EDISON CO.	2536 W. UNIVERSITY ST.	ST. LOUIS, MO 63107
72136	ELECTRO MOTIVE CORPORATION, SUB OF INTERNATIONAL ELECTRONICS CORPORATION	LAUTER AVE, P O BOX 7600	FLORENCE, SC 29501
72982	ERIE TECHNOLOGICAL PRODUCTS, INC.	644 W. 12TH ST.	ERIE, PA 16512
74970	JOHNSON, E. F., CO.	299 10TH AVE. S. W.	WASECA, MN 56093
75378	CTS KNIGHTS, INC.	400 REIMANN AVE.	SANDWICH, IL 60548
75915	LITTELFUSE, INC.	800 E. NORTHWEST HWY	DES PLAINES, IL 60016
76493	BELL INDUSTRIES, INC., MILLER, J. W., DIV.	19070 REYES AVE., P O BOX 5825	COMPTON, CA 90224
77820	BENDIX CORP., THE, ELECTRICAL COMPONENTS DIVISION	SHERMAN AVE.	SIDNEY, NY 13838
80009	TEKTRONIX, INC.	P O BOX 500	BEAVERTON, OR 97077
90201	MALLORY CAPACITOR CO., DIV. OF P. R. MALLORY AND CO., INC.	3029 E. WASHINGTON STREET P. O. BOX 372	INDIANAPOLIS, IN 46206
91418	RADIO MATERIALS COMPANY, DIV. OF P.R. MALLORY AND COMPANY, INC.	4242 W BRYN MAWR	CHICAGO, IL 60646
91637	DALE ELECTRONICS, INC.	P. O. BOX 609	COLUMBUS, NE 68601
98291	SEALECTRO CORP.	225 HOYT	MAMARONECK, NY 10544

Ckt No.	Tektronix Part No.	Serial/Model No. Eff	Dscont	Name & Description	Mfr Code	Mfr Part Number
A1	670-2512-00	B010100	B029999	CKT BOARD ASSY:SIGNAL PROCESSING	80009	670-2512-00
A1	670-2512-02	B030000	B039999	CKT BOARD ASSY:SIGNAL PROCESSING	80009	670-2512-02
A1	670-2512-04	B040000	B060619	CKT BOARD ASSY:SIGNAL PROCESSING	80009	670-2512-04
A1	670-2512-06	B060620	B060659	CKT BOARD ASSY:SIGNAL PROCESSING	80009	670-2512-06
A1	670-2512-10	B060660		CKT BOARD ASSY:SIGNAL PROCESSING	80009	670-2512-10
A2	670-2513-00			CKT BOARD ASSY:FILTER	80009	670-2513-00
A3	670-2509-00	B010100	B039999	CKT BOARD ASSY:TIMING	80009	670-2509-00
A3	670-2509-01	B040000	B060659	CKT BOARD ASSY:TIMING	80009	670-2509-01
A3	670-2509-04	B060660	B061043	CKT BOARD ASSY:TIMING	80009	670-2509-04
A3	670-2509-05	B061044		CKT BOARD ASSY:TIMING	80009	670-2509-05
A4	670-2510-00	B010100	B029999	CKT BOARD ASSY:DECODER	80009	670-2510-00
A4	670-2510-01	B030000	B039999	CKT BOARD ASSY:DECODER	80009	670-2510-01
A4	670-2510-02	B040000	B060659	CKT BOARD ASSY:DECODER	80009	670-2510-02
A4	670-2510-04	B060660	B061043	CKT BOARD ASSY:DECODER	80009	670-2510-04
A4	670-2510-05	B061044		CKT BOARD ASSY:DECODER	80009	670-2510-05
A5	670-2511-00	B010100	B039999	CKT BOARD ASSY:ERROR AMPL	80009	670-2511-00
A5	670-2511-02	B040000	B060659	CKT BOARD ASSY:ERROR AMPL	80009	670-2511-02
A5	670-2511-04	B060660		CKT BOARD ASSY:ERROR AMPL	80009	670-2511-04
A6	670-1473-02	B010100	B060649	CKT BOARD ASSY:POWER SUPPLY	80009	670-1473-02
A6	670-1473-07	B060470		CKT BOARD ASSY:POWER SUPPLY	80009	670-1473-07
A7	670-2991-00	B010100	B039999	CKT BOARD ASSY:ZERO REFERENCE	80009	670-2991-00
A7	670-2991-01	B040000	B060659	CKT BOARD ASSY:ZERO REFERENCE	80009	670-2991-01
A7	670-2991-05	B060660		CKT BOARD ASSY:ZERO REFERENCE	80009	670-2991-05
A8	670-2814-00			CKT BOARD ASSY:RELAY	80009	670-2814-00
A9	670-3022-00			CKT BOARD ASSY:R.F.I. CAPACITOR	80009	670-3022-00
A10	670-4253-00	XB060372		CKT BOARD ASSY:CHOPPER DETECTOR	80009	670-4253-00
C1	283-0000-00			CAP.,FXD,CER DI:0.001UF,+100-0%,500V	72982	831-516E102P
C2	283-0000-00			CAP.,FXD,CER DI:0.001UF,+100-0%,500V	72982	831-516E102P
C3	283-0000-00			CAP.,FXD,CER DI:0.001UF,+100-0%,500V	72982	831-516E102P
C4	283-0000-00			CAP.,FXD,CER DI:0.001UF,+100-0%,500V	72982	831-516E102P
C5	283-0000-00			CAP.,FXD,CER DI:0.001UF,+100-0%,500V	72982	831-516E102P
C6	283-0000-00			CAP.,FXD,CER DI:0.001UF,+100-0%,500V	72982	831-516E102P
C7	283-0000-00			CAP.,FXD,CER DI:0.001UF,+100-0%,500V	72982	831-516E102P
C12	283-0000-00			CAP.,FXD,CER DI:0.001UF,+100-0%,500V	72982	831-516E102P
C13	283-0000-00			CAP.,FXD,CER DI:0.001UF,+100-0%,500V	72982	831-516E102P
C14	283-0000-00			CAP.,FXD,CER DI:0.001UF,+100-0%,500V	72982	831-516E102P
C15	283-0000-00			CAP.,FXD,CER DI:0.001UF,+100-0%,500V	72982	831-516E102P
C16	283-0000-00			CAP.,FXD,CER DI:0.001UF,+100-0%,500V	72982	831-516E102P
C17	283-0000-00			CAP.,FXD,CER DI:0.001UF,+100-0%,500V	72982	831-516E102P
C18	283-0000-00			CAP.,FXD,CER DI:0.001UF,+100-0%,500V	72982	831-516E102P
C20	283-0000-00			CAP.,FXD,CER DI:0.001UF,+100-0%,500V	72982	831-516E102P
C21	283-0000-00			CAP.,FXD,CER DI:0.001UF,+100-0%,500V	72982	831-516E102P
C22	283-0000-00			CAP.,FXD,CER DI:0.001UF,+100-0%,500V	72982	831-516E102P
C23	283-0000-00			CAP.,FXD,CER DI:0.001UF,+100-0%,500V	72982	831-516E102P
C24	283-0000-00			CAP.,FXD,CER DI:0.001UF,+100-0%,500V	72982	831-516E102P
C25	283-0000-00			CAP.,FXD,CER DI:0.001UF,+100-0%,500V	72982	831-516E102P
C31	283-0000-00			CAP.,FXD,CER DI:0.001UF,+100-0%,500V	72982	831-516E102P
C32	283-0000-00			CAP.,FXD,CER DI:0.001UF,+100-0%,500V	72982	831-516E102P
C33	283-0000-00			CAP.,FXD,CER DI:0.001UF,+100-0%,500V	72982	831-516E102P
C34	283-0000-00			CAP.,FXD,CER DI:0.001UF,+100-0%,500V	72982	831-516E102P
C35	283-0000-00			CAP.,FXD,CER DI:0.001UF,+100-0%,500V	72982	831-516E102P
C36	283-0000-00			CAP.,FXD,CER DI:0.001UF,+100-0%,500V	72982	831-516E102P
C619	290-0527-00	B010100	B039999X	CAP.,FXD,ELCTLT:15UF,20%,20V	90201	TDC156M020FL
C629	290-0527-00	B010100	B039999	CAP.,FXD,ELCTLT:15UF,20%,20V	90201	TDC156M020FL
C629	283-0023-00	B040000		CAP.,FXD,CER DI:0.1UF,+80-20%,12V	91418	MX0104Z1205R5
C639	290-0527-00	B010100	B039999X	CAP.,FXD,ELCTLT:15UF,20%,20V	90201	TDC156M020FL

Ckt No.	Tektronix Part No.	Serial/Model No. Eff	Dscont	Name & Description	Mfr Code	Mfr Part Number
C658	283-0032-00			CAP.,FXD,CER DI:470PF,5%,500V	72982	0831085Z5E00471J
C674	283-0623-00			CAP.,FXD,MICA D:1200PF,1%,100V	00853	D191F122F0
C675	283-0630-00	B010100	B029999	CAP.,FXD,MICA D:110PF,1%,100V	00853	D151E111F0
C675	283-0620-00	B030000		CAP.,FXD,MICA D:470PF,1%,300V	00853	D153F471F0
C676	283-0626-00			CAP.,FXD,MICA D:1800PF,5%,500V	00853	D195E182J0
C684	281-0541-00			CAP.,FXD,CER DI:6.8PF,10%,500V	72982	301-000C0H0689D
C685	283-0065-00			CAP.,FXD,CER DI:0.001UF,5%,100V	72982	805-518-Z5D0102J
C688	283-0000-00			CAP.,FXD,CER DI:0.001UF,+100-0%,500V	72982	831-516E102P
C902	283-0669-00			CAP.,FXD,MICA D:360PF,1%,500V	00853	D155F361F0
C906	281-0092-00			CAP.,VAR,CER DI:9-35PF,200V	72982	538-011 D9-35
C908	281-0092-00			CAP.,VAR,CER DI:9-35PF,200V	72982	538-011 D9-35
C910	283-0669-00			CAP.,FXD,MICA D:360PF,1%,500V	00853	D155F361F0
C918	283-0601-00			CAP.,FXD,MICA D:22PF,10%,300V	00853	D153C220K0
C920	283-0601-00			CAP.,FXD,MICA D:22PF,10%,300V	00853	D153C220K0
C924	281-0092-00			CAP.,VAR,CER DI:9-35PF,200V	72982	538-011 D9-35
C928	281-0092-00			CAP.,VAR,CER DI:9-35PF,200V	72982	538-011 D9-35
C934	283-0669-00			CAP.,FXD,MICA D:360PF,1%,500V	00853	D155F361F0
C940	283-0601-00			CAP.,FXD,MICA D:22PF,10%,300V	00853	D153C220K0
C944	281-0092-00			CAP.,VAR,CER DI:9-35PF,200V	72982	538-011 D9-35
C948	281-0092-00			CAP.,VAR,CER DI:9-35PF,200V	72982	538-011 D9-35
C954	283-0669-00			CAP.,FXD,MICA D:360PF,1%,500V	00853	D155F361F0
C960	283-0601-00			CAP.,FXD,MICA D:22PF,10%,300V	00853	D153C220K0
C964	283-0636-00			CAP.,FXD,MICA D:36PF,1.4%,100V	00853	D155F360G0
C968	281-0092-00			CAP.,VAR,CER DI:9-35PF,200V	72982	538-011 D9-35
C970	281-0092-00			CAP.,VAR,CER DI:9-35PF,200V	72982	538-011 D9-35
C980	283-0669-00			CAP.,FXD,MICA D:360PF,1%,500V	00853	D155F361F0
C984	283-0601-00			CAP.,FXD,MICA D:22PF,10%,300V	00853	D153C220K0
C986	281-0092-00			CAP.,VAR,CER DI:9-35PF,200V	72982	538-011 D9-35
C988	281-0092-00			CAP.,VAR,CER DI:9-35PF,200V	72982	538-011 D9-35
C1100	283-0000-00			CAP.,FXD,CER DI:0.001UF,+100-0%,500V	72982	831-516E102P
C1132	283-0197-00			CAP.,FXD,CER DI:470PF,5%,100V	72982	8121N075C0G0471J
C1136	290-0519-00	B010100	B039999	CAP.,FXD,ELCTLT:100UF,20%,20V	90201	TDC107M020WLD
C1136	283-0177-00	B040000		CAP.,FXD,CER DI:1UF,+80-20%,25V	72982	8131N039 E 105Z
C1140	290-0530-00	B010100	B039999	CAP.,FXD,ELCTLT:68UF,20%,6V	90201	TDC686M006NLF
C1140	290-0302-00	B040000		CAP.,FXD,ELCTLT:100UF,10%,20V	12954	D100D20KI
C1142	290-0519-00	B010100	B039999	CAP.,FXD,ELCTLT:100UF,20%,20V	90201	TDC107M020WLD
C1142	283-0177-00	B040000		CAP.,FXD,CER DI:1UF,+80-20%,25V	72982	8131N039 E 105Z
C1144	283-0000-00			CAP.,FXD,CER DI:0.001UF,+100-0%,500V	72982	831-516E102P
C1170	283-0028-00			CAP.,FXD,CER DI:0.0022UF,20%,50V	56289	19C606
C1190	283-0001-00			CAP.,FXD,CER DI:0.005UF,+100-0%,500V	72982	831-559E502P
C1192	283-0647-00			CAP.,FXD,MICA D:70PF,1%,100V	00853	D151E700F0
C1195	290-0527-00	B010100	B039999	CAP.,FXD,ELCTLT:15UF,20%,20V	90201	TDC156M020FL
C1195	283-0164-00	B040000		CAP.,FXD,CER DI:2.2UF,20%,25V	72982	8141N037Z5U0225M
C1232	283-0111-00			CAP.,FXD,CER DI:0.1UF,20%,50V	72982	8121-N088Z5U104M
C1302	281-0534-00			CAP.,FXD,CER DI:3.3PF,+/-0.25PF,500V	72982	301-000C0J0339C
C1304	283-0649-00			CAP.,FXD,MICA D:105PF,1%,300V	00853	D153F1050F0
C1321	283-0003-00			CAP.,FXD,CER DI:0.01UF,+80-20%,150V	72982	855-558Z5U-103Z
C1326	283-0111-00			CAP.,FXD,CER DI:0.1UF,20%,50V	72982	8121-N088Z5U104M
C1330	290-0535-00	B010100	B039999	CAP.,FXD,ELCTLT:33UF,20%,10V	56289	196D336X0010KA1
C1330	283-0177-00	B040000		CAP.,FXD,CER DI:1UF,+80-20%,25V	72982	8131N039 E 105Z
C1331	283-0003-00			CAP.,FXD,CER DI:0.01UF,+80-20%,150V	72982	855-558Z5U-103Z
C1332	283-0144-00			CAP.,FXD,CER DI:33PF,1%,500V	72982	801-547P2G330G
C1336	283-0001-00			CAP.,FXD,CER DI:0.005UF,+100-0%,500V	72982	831-559E502P
C1376	283-0639-00			CAP.,FXD,MICA D:56PF,1%,100V	00853	D151E560F0
C1384	281-0153-00			CAP.,VAR,AIR DI:1.7-10PF,250V	74970	187-0106-005
C1412	283-0601-00			CAP.,FXD,MICA D:22PF,10%,300V	00853	D153C220K0
C1436	283-0001-00			CAP.,FXD,CER DI:0.005UF,+100-0%,500V	72982	831-559E502P

Ckt No.	Tektronix Part No.	Serial/Model No. Eff	Dscont	Name & Description	Mfr Code	Mfr Part Number
C1462	283-0647-00			CAP.,FXD,MICA D:70PF,1%,100V	00853	D151E700F0
C1472	283-0630-00			CAP.,FXD,MICA D:110PF,1%,100V	00853	D151E111F0
C1474	283-0598-00			CAP.,FXD,MICA D:253PF,5%,300V	00853	D153E2530J0
C1484	290-0524-00	B010100	B039999	CAP.,FXD,ELCTLT:4.7UF,20%,10V	90201	TDC475M010EL
C1484	283-0081-00	B040000		CAP.,FXD,CER DI:0.1UF,+80-20%,25V	56289	36C600
C1500	283-0004-00			CAP.,FXD,CER DI:0.02UF,+80-20%,150V	72982	855-558-Z5V0203Z
C1524	283-0003-00			CAP.,FXD,CER DI:0.01UF,+80-20%,150V	72982	855-558Z5U-103Z
C1540	290-0527-00	B010100	B039999	CAP.,FXD,ELCTLT:15UF,20%,20V	90201	TDC156M020FL
C1540	290-0290-00	B040000	B060619	CAP.,FXD,ELCTLT:10UF,20%,25V	56289	30D472
C1540	290-0745-00	B060620		CAP.,FXD,ELCTLT:22UF,+50-10%,25V	56289	502D225
C1544	281-0153-00			CAP.,VAR,AIR DI:1.7-10PF,250V	74970	187-0106-005
C1550	290-0524-00	B010100	B039999	CAP.,FXD,ELCTLT:4.7UF,20%,10V	90201	TDC475M010EL
C1550	283-0081-00	B040000		CAP.,FXD,CER DI:0.1UF,+80-20%,25V	56289	36C600
C1556	283-0003-00			CAP.,FXD,CER DI:0.01UF,+80-20%,150V	72982	855-558Z5U-103Z
C1558	283-0003-00			CAP.,FXD,CER DI:0.01UF,+80-20%,150V	72982	855-558Z5U-103Z
C1564	283-0028-00	B010100	B039999	CAP.,FXD,CER DI:0.0022UF,20%,50V	56289	19C606
C1564	283-0028-00	B040000		CAP.,FXD,CER DI:0.0022UF,(NOM VALUE),SEL	56289	19C606
C1566	283-0000-00	B010100	B060619	CAP.,FXD,CER DI:0.001UF,+100-0%,500V	72982	831-516E102P
C1566	283-0142-00	B060620		CAP.,FXD,CER DI:0.0027UF,(NOM VALUE),SEL	72982	875-571-Y5E0272J
C1570	283-0238-00			CAP.,FXD,CER DI:0.01UF,10%,50V	72982	8121N075X7R0103K
C1572	283-0111-00			CAP.,FXD,CER DI:0.1UF,20%,50V	72982	8121-N088Z5U104M
C1576	283-0028-00			CAP.,FXD,CER DI:0.0022UF,20%,50V	56289	19C606
C1580	281-0153-00			CAP.,VAR,AIR DI:1.7-10PF,250V	74970	187-0106-005
C1596	283-0601-00			CAP.,FXD,MICA D:22PF,10%,300V	00853	D153C220K0
C1604	283-0629-00			CAP.,FXD,MICA D:62PF,1%,500V	00853	D105E620F0
C1614	283-0618-00			CAP.,FXD,MICA D:130PF,2%,300V	00853	D155E131G0
C1616	283-0004-00			CAP.,FXD,CER DI:0.02UF,+80-20%,150V	72982	855-558-Z5V0203Z
C1622	283-0680-00			CAP.,FXD,MICA D:330PF,1%,500V	72136	DM15ED331F0
C1624	283-0111-00			CAP.,FXD,CER DI:0.1UF,20%,50V	72982	8121-N088Z5U104M
C1636	283-0680-00			CAP.,FXD,MICA D:330PF,1%,500V	72136	DM15ED331F0
C1638	283-0647-00			CAP.,FXD,MICA D:70PF,1%,100V	00853	D151E700F0
C1650	290-0512-00	B010100	B039999	CAP.,FXD,ELCTLT:22UF,20%,15V	56289	196D226X0015KA1
C1650	283-0164-00	B040000		CAP.,FXD,CER DI:2.2UF,20%,25V	72982	8141N037Z5U0225M
C1652	283-0672-00			CAP.,FXD,MICA D:200PF,1%,500V	00853	D155F201F0
C1664	283-0111-00			CAP.,FXD,CER DI:0.1UF,20%,50V	72982	8121-N088Z5U104M
C1672	283-0083-00	B010100	B029999	CAP.,FXD,CER DI:0.0047UF,20%,500V	72982	811-565C472J
C1672	283-0028-00	B030000		CAP.,FXD,CER DI:0.0022UF,(NOM VALUE),SEL	56289	19C606
C1680	283-0003-00			CAP.,FXD,CER DI:0.01UF,+80-20%,150V	72982	855-558Z5U-103Z
C1722	283-0004-00			CAP.,FXD,CER DI:0.02UF,+80-20%,150V	72982	855-558-Z5V0203Z
C1724	283-0680-00			CAP.,FXD,MICA D:330PF,1%,500V	72136	DM15ED331F0
C1742	283-0680-00			CAP.,FXD,MICA D:330PF,1%,500V	72136	DM15ED331F0
C1778	283-0027-00			CAP.,FXD,CER DI:0.02UF,20%,50V	56289	273C32
C1784	290-0527-00	B010100	B039999	CAP.,FXD,ELCTLT:15UF,20%,20V	90201	TDC156M020FL
C1784	290-0162-00	B040000	B060619	CAP.,FXD,ELCTLT:22UF,20%,35V	12954	D22C35M1
C1784	290-0718-00	B060620		CAP.,FXD,ELCTLT:22UF,20%,35V	56289	196D226X0035PE4
C1800	283-0004-00			CAP.,FXD,CER DI:0.02UF,+80-20%,150V	72982	855-558-Z5V0203Z
C1808	283-0003-00			CAP.,FXD,CER DI:0.01UF,+80-20%,150V	72982	855-558Z5U-103Z
C1810	283-0111-00			CAP.,FXD,CER DI:0.1UF,20%,50V	72982	8121-N088Z5U104M
C1812	283-0003-00			CAP.,FXD,CER DI:0.01UF,+80-20%,150V	72982	855-558Z5U-103Z
C1820	283-0003-00			CAP.,FXD,CER DI:0.01UF,+80-20%,150V	72982	855-558Z5U-103Z
C1828	283-0111-00			CAP.,FXD,CER DI:0.1UF,20%,50V	72982	8121-N088Z5U104M
C1830	283-0003-00			CAP.,FXD,CER DI:0.01UF,+80-20%,150V	72982	855-558Z5U-103Z
C1850	283-0648-00			CAP.,FXD,MICA D:10PF,5%,100V	00853	D151C100D0
C1870	283-0001-00			CAP.,FXD,CER DI:0.005UF,+100-0%,500V	72982	831-559E502P
C1880	290-0367-00			CAP.,FXD,ELCTLT:70UF,20%,6V NONPOLARIZED	56289	30D1802
	----- -----	B010100	B019999	(SELECTED,ADDED IF NECESSARY)		
C1886	281-0534-00	B020000		CAP.,FXD,CER DI:3.3PF,(NOM VALUE),SEL	72982	301-000C0J0339C
	----- -----			**(ADDED IF NECESSARY)**		

Ckt No.	Tektronix Part No.	Serial/Model No. Eff	Dscont	Name & Description	Mfr Code	Mfr Part Number
C1888	283-0111-00			CAP.,FXD,CER DI:0.1UF,20%,50V	72982	8121-N088Z5U104M
C2344	283-0003-00			CAP.,FXD,CER DI:0.01UF,+80-20%,150V	72982	855-558Z5U-103Z
C2346	283-0083-00			CAP.,FXD,CER DI:0.0047UF,20%,500V	72982	811-565C472J
C2362	283-0003-00			CAP.,FXD,CER DI:0.01UF,+80-20%,150V	72982	855-558Z5U-103Z
C2382	283-0003-00			CAP.,FXD,CER DI:0.01UF,+80-20%,150V	72982	855-558Z5U-103Z
C2790	281-0092-00			CAP.,VAR,CER DI:9-35PF,200V	72982	538-011 D9-35
C2832	283-0603-00			CAP.,FXD,MICA D:113PF,2%,300V	00853	D153F1130G0
C2834	283-0603-00			CAP.,FXD,MICA D:113PF,2%,300V	00853	D153F1130G0
C2840	283-0601-00			CAP.,FXD,MICA D:22PF,10%,300V	00853	D153C220K0
C2842	283-0603-00			CAP.,FXD,MICA D:113PF,2%,300V	00853	D153F1130G0
C2846	283-0603-00			CAP.,FXD,MICA D:113PF,2%,300V	00853	D153F1130G0
C2848	283-0603-00			CAP.,FXD,MICA D:113PF,2%,300V	00853	D153F1130G0
C2850	283-0603-00			CAP.,FXD,MICA D:113PF,2%,300V	00853	D153F1130G0
C2854	283-0603-00			CAP.,FXD,MICA D:113PF,2%,300V	00853	D153F1130G0
C2860	283-0603-00			CAP.,FXD,MICA D:113PF,2%,300V	00853	D153F1130G0
C2862	283-0603-00			CAP.,FXD,MICA D:113PF,2%,300V	00853	D153F1130G0
C2872	283-0644-00			CAP.,FXD,MICA D:150PF,1%,500V	00853	D151E151F0
C2880	283-0603-00			CAP.,FXD,MICA D:113PF,2%,300V	00853	D153F1130G0
C2882	283-0603-00			CAP.,FXD,MICA D:113PF,2%,300V	00853	D153F1130G0
C2892	283-0639-00			CAP.,FXD,MICA D:56PF,1%,100V	00853	D151E560F0
C3016	283-0670-00			CAP.,FXD,MICA D:375PF,1%,500V	00853	D155F3750F0
C3020	283-0615-00			CAP.,FXD,MICA D:33PF,5%,500V	00853	D155E330J0
C3152	283-0605-00			CAP.,FXD,MICA D:678PF,1%,300V	00853	D153F6780F0
C3162	283-0597-00	B010100	B060619	CAP.,FXD,MICA D:470PF,10%,300V	00853	D153E471K0
C3162	283-0691-00	B060620		CAP.,FXD,MICA D:650PF,1%,300V	72136	DM15FC651F0
C3200	283-0111-00			CAP.,FXD,CER DI:0.1UF,20%,50V	72982	8121-N088Z5U104M
C3212	283-0594-00			CAP.,FXD,MICA D:0.001UF,1%,100V	00853	D151F102F0
C3214	283-0249-00			CAP.,FXD,CER DI:0.068UF,10%,50V	72982	8131N075 C 683K
C3218	283-0602-00			CAP.,FXD,MICA D:53PF,5%,300V	00853	D153E530J0
C3232	283-0000-00			CAP.,FXD,CER DI:0.001UF,+100-0%,500V	72982	831-516E102P
C3238	283-0593-00			CAP.,FXD,MICA D:0.01UF,1%,100V	00853	D301F103F0
C3240	283-0032-00			CAP.,FXD,CER DI:470PF,5%,500V	72982	0831085Z5E00471J
C3252	283-0068-00			CAP.,FXD,CER DI:0.01UF,+100-0%,500V	56289	19C241
C3256	283-0059-00			CAP.,FXD,CER DI:1UF,+80-20%,25V	72982	8131N031Z5U0105Z
C3274	290-0524-00			CAP.,FXD,ELCTLT:4.7UF,20%,10V	90201	TDC475M010EL
C3290	283-0032-00			CAP.,FXD,CER DI:470PF,5%,500V	72982	0831085Z5E00471J
C3292	283-0622-00			CAP.,FXD,MICA D:450PF,1%,300V	00853	D153F451F0
C3294	283-0111-00			CAP.,FXD,CER DI:0.1UF,20%,50V	72982	8121-N088Z5U104M
C3300	281-0516-00			CAP.,FXD,CER DI:39PF,+/-3.9PF,500V	72982	301-000U2J0390K
C3364	290-0512-00			CAP.,FXD,ELCTLT:22UF,20%,15V	56289	196D226X0015KA1
C3406	283-0680-00			CAP.,FXD,MICA D:330PF,1%,500V	72136	DM15ED331F0
C3408	283-0635-00			CAP.,FXD,MICA D:51PF,1%,100V	00853	D151E510F0
C3412	290-0517-00			CAP.,FXD,ELCTLT:6.8UF,20%,35V	56289	196D685X0035KA1
C3414	290-0517-00			CAP.,FXD,ELCTLT:6.8UF,20%,35V	56289	196D685X0035KA1
C3420	283-0032-00			CAP.,FXD,CER DI:470PF,5%,500V	72982	0831085Z5E00471J
C3426	283-0627-00			CAP.,FXD,MICA D:0.0033UF,5%,500V	00853	D195E332J0
C3430	283-0032-00			CAP.,FXD,CER DI:470PF,5%,500V	72982	0831085Z5E00471J
C3446	283-0597-00			CAP.,FXD,MICA D:470PF,10%,300V	00853	D153E471K0
C3470	290-0530-00			CAP.,FXD,ELCTLT:68UF,20%,6V	90201	TDC686M006NLF
C3474	283-0000-00			CAP.,FXD,CER DI:0.001UF,+100-0%,500V	72982	831-516E102P
C3490	283-0032-00			CAP.,FXD,CER DI:470PF,5%,500V	72982	0831085Z5E00471J
C3496	283-0032-00			CAP.,FXD,CER DI:470PF,5%,500V	72982	0831085Z5E00471J
C3502	283-0618-00			CAP.,FXD,MICA D:130PF,2%,300V	00853	D155E131G0
C3504	283-0059-00			CAP.,FXD,CER DI:1UF,+80-20%,25V	72982	8131N031Z5U0105Z
C3506	283-0080-00			CAP.,FXD,CER DI:0.022UF,+80-20%,25V	56289	19C611
C3510	290-0529-00			CAP.,FXD,ELCTLT:47UF,20%,20V	05397	T368C476M020AZ

Ckt No.	Tektronix Part No.	Serial/Model No. Eff	Dscont	Name & Description	Mfr Code	Mfr Part Number
C3512	283-0027-00			CAP.,FXD,CER DI:0.02UF,20%,50V	56289	273C32
C3630	290-0524-00			CAP.,FXD,ELCTLT:4.7UF,20%,10V	90201	TDC475M010EL
C3660	283-0623-00			CAP.,FXD,MICA D:1200PF,1%,100V	00853	D191F122F0
C3664	283-0597-00			CAP.,FXD,MICA D:470PF,10%,300V	00853	D153E471K0
C3680	283-0636-00			CAP.,FXD,MICA D:36PF,1.4%,100V	00853	D155F360G0
C3712	290-0512-00			CAP.,FXD,ELCTLT:22UF,20%,15V	56289	196D226X0015KA1
C3732	283-0080-00	B010100	B061043	CAP.,FXD,CER DI:0.022UF,+80-20%,25V	56289	19C611
C3732	283-0191-00	B061044		CAP.,FXD,CER DI:0.022UF,20%,50V	72982	8121N075Z5U0223M
C3740	283-0068-00			CAP.,FXD,CER DI:0.01UF,+100-0%,500V	56289	19C241
C3742	283-0032-00			CAP.,FXD,CER DI:470PF,5%,500V	72982	0831085Z5E00471J
C3748	283-0623-00			CAP.,FXD,MICA D:1200PF,1%,100V	00853	D191F122F0
C3758	283-0623-00			CAP.,FXD,MICA D:1200PF,1%,100V	00853	D191F122F0
C3800	283-0068-00			CAP.,FXD,CER DI:0.01UF,+100-0%,500V	56289	19C241
C3830	283-0000-00	B010100	B039999	CAP.,FXD,CER DI:0.001UF,+100-0%,500V	72982	831-516E102P
C3830	283-0065-00	B040000		CAP.,FXD,CER DI:0.001UF,5%,100V	72982	805-518-Z5D0102J
C3836	283-0623-00			CAP.,FXD,MICA D:1200PF,1%,100V	00853	D191F122F0
C3864	283-0068-00			CAP.,FXD,CER DI:0.01UF,+100-0%,500V	56289	19C241
C3868	283-0623-00			CAP.,FXD,MICA D:1200PF,1%,100V	00853	D191F122F0
C3880	283-0065-00			CAP.,FXD,CER DI:0.001UF,5%,100V	72982	805-518-Z5D0102J
C3928	283-0058-00			CAP.,FXD,CER DI:0.027UF,10%,100V	72982	8131N147X7R0273K
C3930	283-0198-00			CAP.,FXD,CER DI:0.22UF,20%,50V	72982	8121N083Z5U0224M
C3950	283-0111-00			CAP.,FXD,CER DI:0.1UF,20%,50V	72982	8121-N088Z5U104M
C3976	283-0032-00			CAP.,FXD,CER DI:470PF,5%,500V	72982	0831085Z5E00471J
C3984	283-0028-00			CAP.,FXD,CER DI:0.0022UF,20%,50V	56289	19C606
C4015	283-0003-00			CAP.,FXD,CER DI:0.01UF,+80-20%,150V	72982	855-558Z5U-103Z
C4046	283-0003-00			CAP.,FXD,CER DI:0.01UF,+80-20%,150V	72982	855-558Z5U-103Z
C4050	290-0524-00			CAP.,FXD,ELCTLT:4.7UF,20%,10V	90201	TDC475M010EL
C4052	290-0524-00			CAP.,FXD,ELCTLT:4.7UF,20%,10V	90201	TDC475M010EL
C4090	283-0672-00			CAP.,FXD,MICA D:200PF,1%,500V	00853	D155F201F0
C4100	283-0065-00			CAP.,FXD,CER DI:0.001UF,5%,100V	72982	805-518-Z5D0102J
C4110	283-0065-00			CAP.,FXD,CER DI:0.001UF,5%,100V	72982	805-518-Z5D0102J
C4138	283-0003-00			CAP.,FXD,CER DI:0.01UF,+80-20%,150V	72982	855-558Z5U-103Z
C4154	283-0003-00			CAP.,FXD,CER DI:0.01UF,+80-20%,150V	72982	855-558Z5U-103Z
C4172	290-0512-00			CAP.,FXD,ELCTLT:22UF,20%,15V	56289	196D226X0015KA1
C4184	283-0111-00			CAP.,FXD,CER DI:0.1UF,20%,50V	72982	8121-N088Z5U104M
C4186	283-0003-00			CAP.,FXD,CER DI:0.01UF,+80-20%,150V	72982	855-558Z5U-103Z
C4210	290-0523-00	B010100	B039999	CAP.,FXD,ELCTLT:2.2UF,20%,20V	56289	196D225X0020HA1
C4210	283-0081-00	B040000		CAP.,FXD,CER DI:0.1UF,+80-20%,25V	56289	36C600
C4220	290-0523-00	B010100	B039999	CAP.,FXD,ELCTLT:2.2UF,20%,20V	56289	196D225X0020HA1
C4220	283-0081-00	B040000		CAP.,FXD,CER DI:0.1UF,+80-20%,25V	56289	36C600
C4224	283-0003-00			CAP.,FXD,CER DI:0.01UF,+80-20%,150V	72982	855-558Z5U-103Z
C4226	283-0003-00			CAP.,FXD,CER DI:0.01UF,+80-20%,150V	72982	855-558Z5U-103Z
C4242	283-0670-00			CAP.,FXD,MICA D:375PF,1%,500V	00853	D155F3750F0
C4250	283-0672-00			CAP.,FXD,MICA D:200PF,1%,500V	00853	D155F201F0
C4270	283-0003-00			CAP.,FXD,CER DI:0.01UF,+80-20%,150V	72982	855-558Z5U-103Z
C4290	290-0529-00			CAP.,FXD,ELCTLT:47UF,20%,20V	05397	T368C476M020AZ
C4294	283-0647-00			CAP.,FXD,MICA D:70PF,1%,100V	00853	D151E700F0
C4299	290-0367-00			CAP.,FXD,ELCTLT:70UF,20%,6V NONPOLARIZED	56289	30D1802
C4322	283-0003-00			CAP.,FXD,CER DI:0.01UF,+80-20%,150V	72982	855-558Z5U-103Z
C4340	283-0003-00			CAP.,FXD,CER DI:0.01UF,+80-20%,150V	72982	855-558Z5U-103Z
C4342	290-0527-00			CAP.,FXD,ELCTLT:15UF,20%,20V	90201	TDC156M020FL
C4344	283-0003-00			CAP.,FXD,CER DI:0.01UF,+80-20%,150V	72982	855-558Z5U-103Z
C4348	290-0527-00			CAP.,FXD,ELCTLT:15UF,20%,20V	90201	TDC156M020FL
C4356	283-0080-00	B010100	B061043	CAP.,FXD,CER DI:0.022UF,+80-20%,25V	56289	19C611
C4356	283-0191-00	B061044		CAP.,FXD,CER DI:0.022UF,20%,50V	72982	8121N075Z5U0223M
C4368	283-0004-00			CAP.,FXD,CER DI:0.02UF,+80-20%,150V	72982	855-558-Z5V0203Z
C4372	283-0177-00			CAP.,FXD,CER DI:1UF,+80-20%,25V	72982	8131N039 E 105Z

Ckt No.	Tektronix Part No.	Serial/Model No. Eff	Dscont	Name & Description	Mfr Code	Mfr Part Number
C4376	283-0618-00			CAP.,FXD,MICA D:130PF,2%,300V	00853	D155E131G0
C4404	283-0065-00			CAP.,FXD,CER DI:0.001UF,5%,100V	72982	805-518-Z5D0102J
C4406	283-0065-00			CAP.,FXD,CER DI:0.001UF,5%,100V	72982	805-518-Z5D0102J
C4422	283-0670-00			CAP.,FXD,MICA D:375PF,1%,500V	00853	D155F3750F0
C4426	283-0003-00			CAP.,FXD,CER DI:0.01UF,+80-20%,150V	72982	855-558Z5U-103Z
C4458	283-0647-00			CAP.,FXD,MICA D:70PF,1%,100V	00853	D151E700F0
C4462	283-0605-00			CAP.,FXD,MICA D:678PF,1%,300V	00853	D153F6780F0
C4472	283-0003-00			CAP.,FXD,CER DI:0.01UF,+80-20%,150V	72982	855-558Z5U-103Z
C4490	283-0111-00			CAP.,FXD,CER DI:0.1UF,20%,50V	72982	8121-N088Z5U104M
C4504	283-0079-00			CAP.,FXD,CER DI:0.01UF,20%,250V	72982	8151B202Y5S0103M
C4514	283-0001-00			CAP.,FXD,CER DI:0.005UF,+100-0%,500V	72982	831-559E502P
C4516	283-0680-00			CAP.,FXD,MICA D:330PF,1%,500V	72136	DM15ED331F0
C4524	283-0111-00			CAP.,FXD,CER DI:0.1UF,20%,50V	72982	8121-N088Z5U104M
C4530	283-0004-00			CAP.,FXD,CER DI:0.02UF,+80-20%,150V	72982	855-558-Z5V0203Z
C4546	283-0680-00			CAP.,FXD,MICA D:330PF,1%,500V	72136	DM15ED331F0
C4570	283-0003-00			CAP.,FXD,CER DI:0.01UF,+80-20%,150V	72982	855-558Z5U-103Z
C4580	290-0512-00	B010100	B029999	CAP.,FXD,ELCTLT:22UF,20%,15V	56289	196D226X0015KA1
C4580	290-0527-00	B030000	B039999	CAP.,FXD,ELCTLT:15UF,20%,20V	90201	TDC156M020FL
C4580	283-0081-00	B040000		CAP.,FXD,CER DI:0.1UF,+80-20%,25V	56289	36C600
C4608	283-0079-00			CAP.,FXD,CER DI:0.01UF,20%,250V	72982	8151B202Y5S0103M
C4624	283-0004-00			CAP.,FXD,CER DI:0.02UF,+80-20%,150V	72982	855-558-Z5V0203Z
C4636	283-0001-00			CAP.,FXD,CER DI:0.005UF,+100-0%,500V	72982	831-559E502P
C4638	283-0111-00			CAP.,FXD,CER DI:0.1UF,20%,50V	72982	8121-N088Z5U104M
C4654	283-0647-00			CAP.,FXD,MICA D:70PF,1%,100V	00853	D151E700F0
C4656	283-0680-00			CAP.,FXD,MICA D:330PF,1%,500V	72136	DM15ED331F0
C4666	283-0003-00			CAP.,FXD,CER DI:0.01UF,+80-20%,150V	72982	855-558Z5U-103Z
C4668	283-0660-00			CAP.,FXD,MICA D:510PF,2%,500V	00853	D155F511G0
C4710	283-0648-00	B010100	B060619	CAP.,FXD,MICA D:10PF,5%,100V	00853	D151C100D0
C4710	283-0615-00	B060620		CAP.,FXD,MICA D:33PF,5%,500V	00853	D155E330J0
C4728	283-0111-00			CAP.,FXD,CER DI:0.1UF,20%,50V	72982	8121-N088Z5U104M
C4754	283-0647-00			CAP.,FXD,MICA D:70PF,1%,100V	00853	D151E700F0
C4756	283-0605-00			CAP.,FXD,MICA D:678PF,1%,300V	00853	D153F6780F0
C4758	283-0605-00			CAP.,FXD,MICA D:678PF,1%,300V	00853	D153F6780F0
C4770	283-0003-00			CAP.,FXD,CER DI:0.01UF,+80-20%,150V	72982	855-558Z5U-103Z
C4784	283-0144-00			CAP.,FXD,CER DI:33PF,1%,500V	72982	801-547P2G330G
C4828	283-0601-00			CAP.,FXD,MICA D:22PF,10%,300V	00853	D153C220K0
C4830	283-0003-00			CAP.,FXD,CER DI:0.01UF,+80-20%,150V	72982	855-558Z5U-103Z
C4840	283-0111-00			CAP.,FXD,CER DI:0.1UF,20%,50V	72982	8121-N088Z5U104M
C4852	290-0527-00	B010100	B039999	CAP.,FXD,ELCTLT:15UF,20%,20V	90201	TDC156M020FL
C4852	283-0081-00	B040000		CAP.,FXD,CER DI:0.1UF,+80-20%,25V	56289	36C600
C4854	290-0512-00	B010100	B039999	CAP.,FXD,ELCTLT:22UF,20%,15V	56289	196D226X0015KA1
C4854	283-0081-00	B040000		CAP.,FXD,CER DI:0.1UF,+80-20%,25V	56289	36C600
C4860	290-0527-00	B010100	B039999	CAP.,FXD,ELCTLT:15UF,20%,20V	90201	TDC156M020FL
C4860	283-0081-00	B040000		CAP.,FXD,CER DI:0.1UF,+80-20%,25V	56289	36C600
C4866	283-0003-00			CAP.,FXD,CER DI:0.01UF,+80-20%,150V	72982	855-558Z5U-103Z
C4874	283-0114-00			CAP.,FXD,CER DI:0.0015UF,5%,200V	72982	805-509B152J
C4876	283-0032-00			CAP.,FXD,CER DI:470PF,5%,500V	72982	0831085Z5E00471J
C4884	283-0028-00			CAP.,FXD,CER DI:0.0022UF,20%,50V	56289	19C606
C4892	283-0003-00			CAP.,FXD,CER DI:0.01UF,+80-20%,150V	72982	855-558Z5U-103Z
C4894	283-0032-00			CAP.,FXD,CER DI:470PF,5%,500V	72982	0831085Z5E00471J
C4960	283-0680-00			CAP.,FXD,MICA D:330PF,1%,500V	72136	DM15ED331F0
C4982	283-0003-00			CAP.,FXD,CER DI:0.01UF,+80-20%,150V	72982	855-558Z5U-103Z
C5140	285-0622-00			CAP.,FXD,PLSTC:0.1UF,20%,100V	56289	410P10401
C5240	285-0598-00			CAP.,FXD,PLSTC:0.01UF,5%,100V	01002	61F10AC103
C5340	285-0598-00			CAP.,FXD,PLSTC:0.01UF,5%,100V	01002	61F10AC103
C5640	285-0628-00			CAP.,FXD,PLSTC:0.033UF,20%,300V	56289	410P33303
C5684	290-0527-00	B010100	B039999	CAP.,FXD,ELCTLT:15UF,20%,20V	90201	TDC156M020FL

Ckt No.	Tektronix Part No.	Serial/Model No. Eff	Dscont	Name & Description	Mfr Code	Mfr Part Number
C5684	290-0107-00	B040000	B060619	CAP.,FXD,ELCTLT:25UF,+75-10%,25V	56289	30D256G025DB9
C5684	290-0745-00	B060620		CAP.,FXD,ELCTLT:22UF,+50-10%,25V	56289	502D225
C5686	290-0527-00	B010100	B039999	CAP.,FXD,ELCTLT:15UF,20%,20V	90201	TDC156M020FL
C5686	290-0107-00	B040000	B060619	CAP.,FXD,ELCTLT:25UF,+75-10%,25V	56289	30D256G025DB9
C5686	290-0745-00	B060620		CAP.,FXD,ELCTLT:22UF,+50-10%,25V	56289	502D225
C5688	283-0003-00			CAP.,FXD,CER DI:0.01UF,+80-20%,150V	72982	855-558Z5U-103Z
C5690	283-0003-00			CAP.,FXD,CER DI:0.01UF,+80-20%,150V	72982	855-558Z5U-103Z
C5740	285-0622-00			CAP.,FXD,PLSTC:0.1UF,20%,100V	56289	410P10401
C5816	290-0527-00	B010100	B039999	CAP.,FXD,ELCTLT:15UF,20%,20V	90201	TDC156M020FL
C5816	290-0255-00	B040000	B060619	CAP.,FXD,ELCTLT:20UF,50V	56289	30D206G050CC9
C5816	290-0745-00	B060620		CAP.,FXD,ELCTLT:22UF,+50-10%,25V	56289	502D225
C5832	290-0525-00			CAP.,FXD,ELCTLT:4.7UF,20%,50V	56289	196D475X0050KA1
C5846	285-0622-00			CAP.,FXD,PLSTC:0.1UF,20%,100V	56289	410P10401
C9011	290-0334-00			CAP.,FXD,ELCTLT:1250UF,+75-10%,50V	56289	D46468
C9042	290-0632-00			CAP.,FXD,ELCTLT:6200UF,+75-10%,15V	56289	39D357
C9061	290-0633-00			CAP.,FXD,ELCTLT:2400UF,+75-10%,30V	56289	39D360
C9244	290-0632-00			CAP.,FXD,ELCTLT:6200UF,+75-10%,15V	56289	39D357
C9802	285-0598-00			CAP.,FXD,PLSTC:0.01UF,5%,100V	01002	61F10AC103
C9810	283-0026-00			CAP.,FXD,CER DI:0.2UF,+80-20%,25V	56289	274C3
C9824	290-0296-00			CAP.,FXD,ELCTLT:100UF,20%,20V	56289	150D107X0020S2
C9830	285-0598-00			CAP.,FXD,PLSTC:0.01UF,5%,100V	01002	61F10AC103
C9831	283-0000-00	B010100	B019999	CAP.,FXD,CER DI:0.001UF,+100-0%,500V	72982	831-516E102P
C9831	283-0000-00	B020000		CAP.,FXD,CER DI:0.001UF,(NOM VALUE),SEL	72982	831-516E102P
C9832	290-0135-00			CAP.,FXD,ELCTLT:15UF,20%,20V	56289	150D156X0020B2
C9840	283-0026-00			CAP.,FXD,CER DI:0.2UF,+80-20%,25V	56289	274C3
C9850	290-0135-00			CAP.,FXD,ELCTLT:15UF,20%,20V	56289	150D156X0020B2
C9852	283-0026-00			CAP.,FXD,CER DI:0.2UF,+80-20%,25V	56289	274C3
C9854	283-0000-00			CAP.,FXD,CER DI:0.001UF,+100-0%,500V	72982	831-516E102P
C9856	285-0598-00			CAP.,FXD,PLSTC:0.01UF,5%,100V	01002	61F10AC103
CR540	152-0141-02	XB060372		SEMICOND DEVICE:SILICON,30V,50NA	80009	152-0141-02
CR694	152-0141-02	B010100	B039999X	SEMICOND DEVICE:SILICON,30V,50NA	80009	152-0141-02
CR998	152-0333-00			SEMICOND DEVICE:SILICON,55V,200MA	80009	152-0333-00
CR1104	152-0141-02			SEMICOND DEVICE:SILICON,30V,50NA	80009	152-0141-02
CR1130	152-0141-02			SEMICOND DEVICE:SILICON,30V,50NA	80009	152-0141-02
CR1202	152-0141-02			SEMICOND DEVICE:SILICON,30V,50NA	80009	152-0141-02
CR1204	152-0141-02			SEMICOND DEVICE:SILICON,30V,50NA	80009	152-0141-02
CR1206	152-0141-02			SEMICOND DEVICE:SILICON,30V,50NA	80009	152-0141-02
CR1280	152-0141-02			SEMICOND DEVICE:SILICON,30V,50NA	80009	152-0141-02
CR1300	152-0141-02			SEMICOND DEVICE:SILICON,30V,50NA	80009	152-0141-02
CR1328	152-0141-02			SEMICOND DEVICE:SILICON,30V,50NA	80009	152-0141-02
CR1330	152-0141-02			SEMICOND DEVICE:SILICON,30V,50NA	80009	152-0141-02
CR1332	152-0141-02			SEMICOND DEVICE:SILICON,30V,50NA	80009	152-0141-02
CR1448	152-0141-02			SEMICOND DEVICE:SILICON,30V,50NA	80009	152-0141-02
CR1515	152-0141-02			SEMICOND DEVICE:SILICON,30V,50NA	80009	152-0141-02
CR1518	152-0141-02			SEMICOND DEVICE:SILICON,30V,50NA	80009	152-0141-02
CR1528	152-0141-02			SEMICOND DEVICE:SILICON,30V,50NA	80009	152-0141-02
CR1708	152-0141-02			SEMICOND DEVICE:SILICON,30V,50NA	80009	152-0141-02
CR1714	152-0141-02			SEMICOND DEVICE:SILICON,30V,50NA	80009	152-0141-02
CR1732	152-0141-02			SEMICOND DEVICE:SILICON,30V,50NA	80009	152-0141-02
CR1738	152-0141-02			SEMICOND DEVICE:SILICON,30V,50NA	80009	152-0141-02
CR1802	152-0141-02			SEMICOND DEVICE:SILICON,30V,50NA	80009	152-0141-02
CR1804	152-0141-02			SEMICOND DEVICE:SILICON,30V,50NA	80009	152-0141-02
CR1814	152-0141-02			SEMICOND DEVICE:SILICON,30V,50NA	80009	152-0141-02
CR1816	152-0141-02			SEMICOND DEVICE:SILICON,30V,50NA	80009	152-0141-02
CR1822	152-0141-02			SEMICOND DEVICE:SILICON,30V,50NA	80009	152-0141-02
CR1824	152-0141-02			SEMICOND DEVICE:SILICON,30V,50NA	80009	152-0141-02
CR1832	152-0141-02			SEMICOND DEVICE:SILICON,30V,50NA	80009	152-0141-02

Ckt No.	Tektronix Part No.	Serial/Model No. Eff	Dscont	Name & Description	Mfr Code	Mfr Part Number
CR1834	152-0141-02			SEMICOND DEVICE:SILICON,30V,50NA	80009	152-0141-02
CR2230	152-0141-02			SEMICOND DEVICE:SILICON,30V,50NA	80009	152-0141-02
CR2334	152-0141-02			SEMICOND DEVICE:SILICON,30V,50NA	80009	152-0141-02
CR2350	152-0141-02			SEMICOND DEVICE:SILICON,30V,50NA	80009	152-0141-02
CR2352	152-0141-02			SEMICOND DEVICE:SILICON,30V,50NA	80009	152-0141-02
CR2356	152-0141-02			SEMICOND DEVICE:SILICON,30V,50NA	80009	152-0141-02
CR2358	152-0141-02			SEMICOND DEVICE:SILICON,30V,50NA	80009	152-0141-02
CR3264	152-0141-02			SEMICOND DEVICE:SILICON,30V,50NA	80009	152-0141-02
CR3274	152-0141-02			SEMICOND DEVICE:SILICON,30V,50NA	80009	152-0141-02
CR3278	152-0008-00			SEMICOND DEVICE:GERMANIUM,75V,60MA	80009	152-0008-00
CR3410	152-0269-00	B010100	B060659	SEMICOND DEVICE:SILICON,VAR VCAP.,4V,33PF	80009	152-0269-00
CR3410	152-0269-01	B060660		SEMICOND DEVICE:VVC,SI,33PF,5%,35V	80009	152-0269-01
CR3432	152-0141-02			SEMICOND DEVICE:SILICON,30V,50NA	80009	152-0141-02
CR3434	152-0141-02			SEMICOND DEVICE:SILICON,30V,50NA	80009	152-0141-02
CR3578	152-0141-02			SEMICOND DEVICE:SILICON,30V,50NA	80009	152-0141-02
CR3579	152-0141-02			SEMICOND DEVICE:SILICON,30V,50NA	80009	152-0141-02
CR3590	152-0141-02			SEMICOND DEVICE:SILICON,30V,50NA	80009	152-0141-02
CR3734	152-0141-02			SEMICOND DEVICE:SILICON,30V,50NA	80009	152-0141-02
CR3736	152-0141-02			SEMICOND DEVICE:SILICON,30V,50NA	80009	152-0141-02
CR3740	152-0141-02			SEMICOND DEVICE:SILICON,30V,50NA	80009	152-0141-02
CR3806	152-0141-02			SEMICOND DEVICE:SILICON,30V,50NA	80009	152-0141-02
CR3808	152-0141-02			SEMICOND DEVICE:SILICON,30V,50NA	80009	152-0141-02
CR3812	152-0141-02			SEMICOND DEVICE:SILICON,30V,50NA	80009	152-0141-02
CR3822	152-0141-02			SEMICOND DEVICE:SILICON,30V,50NA	80009	152-0141-02
CR3846	152-0141-02			SEMICOND DEVICE:SILICON,30V,50NA	80009	152-0141-02
CR3878	152-0141-02			SEMICOND DEVICE:SILICON,30V,50NA	80009	152-0141-02
CR3912	152-0141-02			SEMICOND DEVICE:SILICON,30V,50NA	80009	152-0141-02
CR3926	152-0141-02			SEMICOND DEVICE:SILICON,30V,50NA	80009	152-0141-02
CR4051	152-0141-02			SEMICOND DEVICE:SILICON,30V,50NA	80009	152-0141-02
CR4112	152-0141-02			SEMICOND DEVICE:SILICON,30V,50NA	80009	152-0141-02
CR4150	152-0141-02			SEMICOND DEVICE:SILICON,30V,50NA	80009	152-0141-02
CR4160	152-0141-02			SEMICOND DEVICE:SILICON,30V,50NA	80009	152-0141-02
CR4166	152-0141-02			SEMICOND DEVICE:SILICON,30V,50NA	80009	152-0141-02
CR4266	152-0141-02			SEMICOND DEVICE:SILICON,30V,50NA	80009	152-0141-02
CR4272	152-0141-02			SEMICOND DEVICE:SILICON,30V,50NA	80009	152-0141-02
CR4306	152-0141-02			SEMICOND DEVICE:SILICON,30V,50NA	80009	152-0141-02
CR4314	152-0141-02			SEMICOND DEVICE:SILICON,30V,50NA	80009	152-0141-02
CR4348	152-0141-02			SEMICOND DEVICE:SILICON,30V,50NA	80009	152-0141-02
CR4418	152-0141-02			SEMICOND DEVICE:SILICON,30V,50NA	80009	152-0141-02
CR4434	152-0141-02			SEMICOND DEVICE:SILICON,30V,50NA	80009	152-0141-02
CR4596	152-0141-02			SEMICOND DEVICE:SILICON,30V,50NA	80009	152-0141-02
CR4616	152-0141-02			SEMICOND DEVICE:SILICON,30V,50NA	80009	152-0141-02
CR4686	152-0141-02			SEMICOND DEVICE:SILICON,30V,50NA	80009	152-0141-02
CR4688	152-0141-02			SEMICOND DEVICE:SILICON,30V,50NA	80009	152-0141-02
CR4718	152-0141-02			SEMICOND DEVICE:SILICON,30V,50NA	80009	152-0141-02
CR4822	152-0141-02			SEMICOND DEVICE:SILICON,30V,50NA	80009	152-0141-02
CR4826	152-0141-02			SEMICOND DEVICE:SILICON,30V,50NA	80009	152-0141-02
CR4890	152-0269-00	B010100	B060659	SEMICOND DEVICE:SILICON,VAR VCAP.,4V,33PF	80009	152-0269-00
CR4890	152-0269-01	B060660		SEMICOND DEVICE:VVC,SI,33PF,5%,35V	80009	152-0269-01
CR5812	152-0141-02			SEMICOND DEVICE:SILICON,30V,50NA	80009	152-0141-02
CR5840	152-0141-02			SEMICOND DEVICE:SILICON,30V,50NA	80009	152-0141-02
CR9802	152-0198-00			SEMICOND DEVICE:SILICON,200V,3A	03508	1N5624
CR9804	152-0198-00			SEMICOND DEVICE:SILICON,200V,3A	03508	1N5624
CR9830	152-0066-00	B010100	B061098	SEMICOND DEVICE:SILICON,400V,750MA	80009	152-0066-00
CR9830	152-0066-01	B061099		SEMICOND DEVICE:SILICON,400V,1A	80009	152-0066-01
CR9832	152-0066-00	B010100	B061098	SEMICOND DEVICE:SILICON,400V,750MA	80009	152-0066-00
CR9832	152-0066-01	B061099		SEMICOND DEVICE:SILICON,400V,1A	80009	152-0066-01

Ckt No.	Tektronix Part No.	Serial/Model No. Eff	Dscont	Name & Description	Mfr Code	Mfr Part Number
CR9834	152-0066-00	B010100	B061098	SEMICOND DEVICE:SILICON,400V,750MA	80009	152-0066-00
CR9834	152-0066-01	B061099		SEMICOND DEVICE:SILICON,400V,1A	80009	152-0066-01
CR9836	152-0066-00	B010100	B061098	SEMICOND DEVICE:SILICON,400V,750MA	80009	152-0066-00
CR9836	152-0066-01	B061099		SEMICOND DEVICE:SILICON,400V,1A	80009	152-0066-01
CR9870	152-0066-00	B010100	B061098	SEMICOND DEVICE:SILICON,400V,750MA	80009	152-0066-00
CR9870	152-0066-01	B061099		SEMICOND DEVICE:SILICON,400V,1A	80009	152-0066-01
CR9872	152-0066-00	B010100	B061098	SEMICOND DEVICE:SILICON,400V,750MA	80009	152-0066-00
CR9872	152-0066-01	B061099		SEMICOND DEVICE:SILICON,400V,1A	80009	152-0066-01
CR9874	152-0066-00	B010100	B061098	SEMICOND DEVICE:SILICON,400V,750MA	80009	152-0066-00
CR9874	152-0066-01	B061099		SEMICOND DEVICE:SILICON,400V,1A	80009	152-0066-01
CR9876	152-0066-00	B010100	B061098	SEMICOND DEVICE:SILICON,400V,750MA	80009	152-0066-00
CR9876	152-0066-01	B061099		SEMICOND DEVICE:SILICON,400V,1A	80009	152-0066-01
DS684	150-1014-00	XB040000		LAMP,LED:RED,50MA	50522	MV5054-1
DS9201	150-0048-00			LAMP,INCAND:5V,60MA	08806	683
DS9202	150-0035-00			LAMP,GLOW:90V,0.3MA	53944	A1B-3
DS9250	150-1001-00			LT EMITTING DIO:RED,660NM,100MA MAX	50522	MV5024
DS9260	150-1001-00			LT EMITTING DIO:RED,660NM,100MA MAX	50522	MV5024
DS9270	150-1001-00			LT EMITTING DIO:RED,660NM,100MA MAX	50522	MV5024
DS9280	150-1001-00			LT EMITTING DIO:RED,660NM,100MA MAX	50522	MV5024
F5691	159-0056-00	B010100	B019999	FUSE,CARTRIDGE:0.1A,125V,FAST-BLOW	75915	279-100
F5691	159-0120-00	B020000		FUSE,CARTRIDGE:0.2A,125V,FAST-BLOW	75915	279-200
F5692	159-0056-00	B010100	B019999	FUSE,CARTRIDGE:0.1A,125V,FAST-BLOW	75915	279-100
F5692	159-0120-00	B020000		FUSE,CARTRIDGE:0.2A,125V,FAST:BLOW	75915	279-200
F9201	159-0042-00			FUSE,CARTRIDGE:3AG,0.75A,250V,FAST-BLOW	71400	AGC 3/4
FL9201	119-0389-00			FILTER,RAD INTE:115/230V,3A	02777	F11935-3
J9005	131-1097-00			CONNECTOR,RCPT,:BNC,FEMALE,CKT CARD MT	24931	28JR220-2
J9010	131-0294-00			CONNECTOR,RCPT,:36 PIN FEMALE	02660	57-40360
J9015	131-1097-00			CONNECTOR,RCPT,:BNC,FEMALE,CKT CARD MT	24931	28JR220-2
J9020	131-0097-00			CONNECTOR,RCPT,:32 CONTACT,FEMALE	02660	26-190-32
J9040	131-0126-00			CONNECTOR,RCPT,:BNC,FEMALE	77820	9663-1 NT-34
J9060	131-0126-00			CONNECTOR,RCPT,:BNC,FEMALE	77820	9663-1 NT-34
J9080	131-0126-00			CONNECTOR,RCPT,:BNC,FEMALE	77820	9663-1 NT-34
J9090	131-0126-00			CONNECTOR,RCPT,:BNC,FEMALE	77820	9663-1 NT-34
J9220	131-0779-00			JACK,TIP:FOR 0.08 INCH DIA TEST POINT	98291	016-8010-00-0208
J9225	131-0779-00			JACK,TIP:FOR 0.08 INCH DIA TEST POINT	98291	016-8010-00-0208
K978	148-0034-00	B010100	B060799	RELAY,ARMATURE:DPDT,15VDC,600 OHM	80009	148-0034-00
K978	148-0107-04	B060800		RELAY,ARMATURE:W/8 PIN HEADER	80009	148-0107-04
L904	108-0673-00			TRANSFORMER,RF:2.2UH	80009	108-0673-00
L914	108-0673-00			TRANSFORMER,RF:2.2UH	80009	108-0673-00
L938	108-0673-00			TRANSFORMER,RF:2.2UH	80009	108-0673-00
L958	108-0673-00			TRANSFORMER,RF:2.2UH	80009	108-0673-00
L982	108-0673-00			TRANSFORMER,RF:2.2UH	80009	108-0673-00
L1306	108-0200-00			COIL,RF:40UH	80009	108-0200-00
L1476	108-0226-00			COIL,RF:100UH	76493	DWG B4257
L1478	108-0597-00			COIL,RF:TOROIDAL,425UH	80009	108-0597-00
L1510	108-0443-00			COIL,RF:25UH	80009	108-0443-00
L1560	108-0443-00			COIL,RF:25UH	80009	108-0443-00
L1628	114-0222-00			COIL,RF:2-6UH,CORE 276-0568-00	80009	114-0222-00
L1632	114-0222-00			COIL,RF:2-6UH,CORE 276-0568-00	80009	114-0222-00
L2730	108-0072-00			COIL,RF:0.75UH	80009	108-0072-00
L2750	108-0072-00			COIL,RF:0.75UH	80009	108-0072-00
L2764	108-0072-00			COIL,RF:0.75UH	80009	108-0072-00
L2766	108-0072-00			COIL,RF:0.75UH	80009	108-0072-00
L2830	108-0072-00			COIL,RF:0.75UH	80009	108-0072-00
L2842	108-0072-00			COIL,RF:0.75UH	80009	108-0072-00

Ckt No.	Tektronix Part No.	Serial/Model No. Eff	Dscont	Name & Description	Mfr Code	Mfr Part Number
L2852	108-0072-00			COIL,RF:0.75UH	80009	108-0072-00
L2870	108-0072-00			COIL,RF:0.75UH	80009	108-0072-00
L2890	108-0072-00			COIL,RF:0.75UH	80009	108-0072-00
L2930	108-0072-00			COIL,RF:0.75UH	80009	108-0072-00
L2940	108-0072-00			COIL,RF:0.75UH	80009	108-0072-00
L2950	108-0072-00			COIL,RF:0.75UH	80009	108-0072-00
L2970	108-0072-00			COIL,RF:0.75UH	80009	108-0072-00
L3400	114-0176-00			COIL,RF:10-40MH,SHIELDED	32436	5E-003-2
L3500	108-0317-00			COIL,RF:FIXED,15UH	32159	71501M
L4378	114-0303-00			COIL,RF:6.5-23UH,CORE 276-0506-00	80009	114-0303-00
L4456	114-0310-00			COIL,RF:VARIABLE,22-80UH	80009	114-0310-00
L4460	114-0311-00			COIL,RF:65-190UH,CORE 276-0568-00	80009	114-0311-00
L4650	108-0109-00			COIL,RF:60UH	80009	108-0109-00
L4652	108-0226-00			COIL,RF:100UH	76493	DWG B4257
L4774	108-0231-00			COIL,RF:4.5UH	80009	108-0231-00
L4856	108-0109-00			COIL,RF:60UH	80009	108-0109-00
L4858	108-0226-00			COIL,RF:100UH	76493	DWG B4257
L4870	108-0231-00			COIL,RF:4.5UH	80009	108-0231-00
L4872	108-0443-00			COIL,RF:25UH	80009	108-0443-00
P9010	131-0293-00			CONNECTOR,PLUG,:36 PIN CABLE PLUG,MALE	02660	57-30360
P9020	131-0096-00			CONNECTOR,RCPT,:32 CONTACT,MAL	02660	26-159-32
Q525	151-0190-00	XB060372		TRANSISTOR:SILICON,NPN	80009	151-0190-00
Q555	151-0190-00	XB060372		TRANSISTOR:SILICON,NPN	80009	151-0190-00
Q683	151-0223-00			TRANSISTOR:SILICON,NPN	80009	151-0223-00
Q684	151-1068-00			TRANSISTOR:SILICON,JFE,SEL FROM 2N4340	80009	151-1068-00
Q685A,B	151-1011-00			TRANSISTOR:SILICON,JFE,N-CHANNEL,DUAL	80009	151-1011-00
Q996	151-0302-00			TRANSISTOR:SILICON,NPN	80009	151-0302-00
Q1164	151-0192-00			TRANSISTOR:SILICON,NPN,SEL FROM MPS6521	80009	151-0192-00
Q1168	151-0192-00			TRANSISTOR:SILICON,NPN,SEL FROM MPS6521	80009	151-0192-00
Q1191	151-0134-00			TRANSISTOR:SILICON,PNP	80009	151-0134-00
Q1212	151-0192-00			TRANSISTOR:SILICON,NPN,SEL FROM MPS6521	80009	151-0192-00
Q1232	151-0410-00			TRANSISTOR:SILICON,PNP	80009	151-0410-00
Q1234	151-0269-00			TRANSISTOR:SILICON,NPN,SEL FROM SE3005	80009	151-0269-00
Q1260	151-0410-00			TRANSISTOR:SILICON,PNP	80009	151-0410-00
Q1262	151-1025-00			TRANSISTOR:SILICON,JFE,N-CHANNEL	80009	151-1025-00
Q1268A	151-0410-00			TRANSISTOR:SILICON,PNP	80009	151-0410-00
Q1268B	151-0410-00			TRANSISTOR:SILICON,PNP	80009	151-0410-00
Q1274	151-0190-00			TRANSISTOR:SILICON,NPN	80009	151-0190-00
Q1315	151-0188-00			TRANSISTOR:SILICON,PNP	80009	151-0188-00
Q1316	151-0410-00			TRANSISTOR:SILICON,PNP	80009	151-0410-00
Q1340	151-0325-00			TRANSISTOR:SILICON,PNP,SEL FROM 2N4258	80009	151-0325-00
Q1434	151-0410-00			TRANSISTOR:SILICON,PNP	80009	151-0410-00
Q1452A	151-0192-00			TRANSISTOR:SILICON,NPN,SEL FROM MPS6521	80009	151-0192-00
Q1452B	151-0192-00			TRANSISTOR:SILICON,NPN,SEL FROM MPS6521	80009	151-0192-00
Q1471	151-1025-00			TRANSISTOR:SILICON,JFE,N-CHANNEL	80009	151-1025-00
Q1486	151-0410-00			TRANSISTOR:SILICON,PNP	80009	151-0410-00
Q1526	151-0410-00			TRANSISTOR:SILICON,PNP	80009	151-0410-00
Q1536	151-0192-00			TRANSISTOR:SILICON,NPN,SEL FROM MPS6521	80009	151-0192-00
Q1582	151-0367-00			TRANSISTOR:SILICON,NPN,SEL FROM 3571TP	80009	151-0367-00
Q1592	151-1025-00			TRANSISTOR:SILICON,JFE,N-CHANNEL	80009	151-1025-00
Q1630	151-0188-00			TRANSISTOR:SILICON,PNP	80009	151-0188-00
Q1642	151-0134-00			TRANSISTOR:SILICON,PNP	80009	151-0134-00
Q1702	151-0325-00			TRANSISTOR:SILICON,PNP,SEL FROM 2N4258	80009	151-0325-00
Q1718	151-0410-00			TRANSISTOR:SILICON,PNP	80009	151-0410-00
Q1760	151-0188-00			TRANSISTOR:SILICON,PNP	80009	151-0188-00
Q1762	151-1025-00			TRANSISTOR:SILICON,JFE,N-CHANNEL	80009	151-1025-00

Ckt No.	Tektronix Part No.	Serial/Model No. Eff	Dscont	Name & Description	Mfr Code	Mfr Part Number
Q1774	151-1078-00			TRANSISTOR:SILICON,JFE,N-CHANNEL	80009	151-1078-00
Q1872	151-0223-00			TRANSISTOR:SILICON,NPN	80009	151-0223-00
Q2194	151-0367-00			TRANSISTOR:SILICON,NPN,SEL FROM 3571TP	80009	151-0367-00
Q2380A,B	151-0353-00			TRANSISTOR:SILICON,NPN	32293	ITS1251
Q2492	151-0367-00			TRANSISTOR:SILICON,NPN,SEL FROM 3571TP	80009	151-0367-00
Q2562	151-0367-00			TRANSISTOR:SILICON,NPN,SEL FROM 3571TP	80009	151-0367-00
Q2580A,B	151-0353-00			TRANSISTOR:SILICON,NPN	32293	ITS1251
Q3120	151-0223-00			TRANSISTOR:SILICON,NPN	80009	151-0223-00
Q3142	151-0190-01			TRANSISTOR:SILICON,NPN	80009	151-0190-01
Q3144	151-0190-01			TRANSISTOR:SILICON,NPN	80009	151-0190-01
Q3202	151-0410-00			TRANSISTOR:SILICON,PNP	80009	151-0410-00
Q3204	151-0410-00			TRANSISTOR:SILICON,PNP	80009	151-0410-00
Q3224	151-0223-00			TRANSISTOR:SILICON,NPN	80009	151-0223-00
Q3226	151-0223-00			TRANSISTOR:SILICON,NPN	80009	151-0223-00
Q3240	151-0190-01			TRANSISTOR:SILICON,NPN	80009	151-0190-01
Q3244	151-0190-01			TRANSISTOR:SILICON,NPN	80009	151-0190-01
Q3248	151-0410-00			TRANSISTOR:SILICON,PNP	80009	151-0410-00
Q3266	151-0190-01			TRANSISTOR:SILICON,NPN	80009	151-0190-01
Q3320	151-0190-01			TRANSISTOR:SILICON,NPN	80009	151-0190-01
Q3532	151-0410-00			TRANSISTOR:SILICON,PNP	80009	151-0410-00
Q3576	151-0302-00			TRANSISTOR:SILICON,NPN	80009	151-0302-00
Q3580	151-0302-00			TRANSISTOR:SILICON,NPN	80009	151-0302-00
Q3606	151-0410-00			TRANSISTOR:SILICON,PNP	80009	151-0410-00
Q3608	151-0410-00			TRANSISTOR:SILICON,PNP	80009	151-0410-00
Q3610	151-0192-00			TRANSISTOR:SILICON,NPN,SEL FROM MPS6521	80009	151-0192-00
Q3616	151-0192-00			TRANSISTOR:SILICON,NPN,SEL FROM MPS6521	80009	151-0192-00
Q3700	151-0410-00			TRANSISTOR:SILICON,PNP	80009	151-0410-00
Q3714	151-0192-00			TRANSISTOR:SILICON,NPN,SEL FROM MPS6521	80009	151-0192-00
Q3716	151-0188-00			TRANSISTOR:SILICON,PNP	80009	151-0188-00
Q3718	151-0190-01			TRANSISTOR:SILICON,NPN	80009	151-0190-01
Q3720	151-0223-00			TRANSISTOR:SILICON,NPN	80009	151-0223-00
Q3722	151-0223-00			TRANSISTOR:SILICON,NPN	80009	151-0223-00
Q3724	151-0190-01			TRANSISTOR:SILICON,NPN	80009	151-0190-01
Q3726	151-0192-00			TRANSISTOR:SILICON,NPN,SEL FROM MPS6521	80009	151-0192-00
Q3730	151-0410-00			TRANSISTOR:SILICON,PNP	80009	151-0410-00
Q3814	151-0188-00			TRANSISTOR:SILICON,PNP	80009	151-0188-00
Q3816	151-0367-00	B010100	B039999	TRANSISTOR:SILICON,NPN,SEL FROM 3571TP	80009	151-0367-00
Q3816	151-0457-00	B040000		TRANSISTOR:SILICON,NPN	07263	S39649
Q3832	151-0190-01			TRANSISTOR:SILICON,NPN	80009	151-0190-01
Q3834	151-0190-01			TRANSISTOR:SILICON,NPN	80009	151-0190-01
Q3838	151-0190-01			TRANSISTOR:SILICON,NPN	80009	151-0190-01
Q3840	151-0190-01			TRANSISTOR:SILICON,NPN	80009	151-0190-01
Q3862	151-0190-01			TRANSISTOR:SILICON,NPN	80009	151-0190-01
Q3990	151-0301-00			TRANSISTOR:SILICON,PNP	04713	2N2907A
Q3996	151-0301-00			TRANSISTOR:SILICON,PNP	04713	2N2907A
Q4031	151-0188-00			TRANSISTOR:SILICON,PNP	80009	151-0188-00
Q4130	151-0223-00			TRANSISTOR:SILICON,NPN	80009	151-0223-00
Q4146	151-0223-00			TRANSISTOR:SILICON,NPN	80009	151-0223-00
Q4148	151-0223-00			TRANSISTOR:SILICON,NPN	80009	151-0223-00
Q4152	151-0410-00			TRANSISTOR:SILICON,PNP	80009	151-0410-00
Q4156	151-0410-00			TRANSISTOR:SILICON,PNP	80009	151-0410-00
Q4158	151-0410-00			TRANSISTOR:SILICON,PNP	80009	151-0410-00
Q4176	151-0190-00			TRANSISTOR:SILICON,NPN	80009	151-0190-00
Q4178	151-0192-00			TRANSISTOR:SILICON,NPN,SEL FROM MPS6521	80009	151-0192-00
Q4190	151-0410-00			TRANSISTOR:SILICON,PNP	80009	151-0410-00
Q4192	151-0367-00			TRANSISTOR:SILICON,NPN,SEL FROM 3571TP	80009	151-0367-00
Q4200A,B	151-1049-00			TRANSISTOR:SILICON,JFE,N-CHANNEL,DUAL	80009	151-1049-00

Ckt No.	Tektronix Part No.	Serial/Model No. Eff	Dscont	Name & Description	Mfr Code	Mfr Part Number
Q4220	151-0223-00			TRANSISTOR:SILICON,NPN	80009	151-0223-00
Q4224	151-0223-00			TRANSISTOR:SILICON,NPN	80009	151-0223-00
Q4244	151-0325-00			TRANSISTOR:SILICON,PNP,SEL FROM 2N4258	80009	151-0325-00
Q4256	151-0223-00			TRANSISTOR:SILICON,NPN	80009	151-0223-00
Q4260	151-0410-00			TRANSISTOR:SILICON,PNP	80009	151-0410-00
Q4264	151-0410-00			TRANSISTOR:SILICON,PNP	80009	151-0410-00
Q4278	151-0223-00			TRANSISTOR:SILICON,NPN	80009	151-0223-00
Q4281	151-0190-00			TRANSISTOR:SILICON,NPN	80009	151-0190-00
Q4282	151-0410-00			TRANSISTOR:SILICON,PNP	80009	151-0410-00
Q4291	151-0410-00			TRANSISTOR:SILICON,PNP	80009	151-0410-00
Q4300A,B	151-1049-00			TRANSISTOR:SILICON,JFE,N-CHANNEL,DUAL	80009	151-1049-00
Q4358	151-0192-00			TRANSISTOR:SILICON,NPN,SEL FROM MPS6521	80009	151-0192-00
Q4360	151-0223-00			TRANSISTOR:SILICON,NPN	80009	151-0223-00
Q4364	151-0192-00			TRANSISTOR:SILICON,NPN,SEL FROM MPS6521	80009	151-0192-00
Q4366	151-0192-00			TRANSISTOR:SILICON,NPN,SEL FROM MPS6521	80009	151-0192-00
Q4380	151-0190-00			TRANSISTOR:SILICON,NPN	80009	151-0190-00
Q4400A,B	151-1049-00			TRANSISTOR:SILICON,JFE,N-CHANNEL,DUAL	80009	151-1049-00
Q4416	151-0325-00			TRANSISTOR:SILICON,PNP,SEL FROM 2N4258	80009	151-0325-00
Q4420	151-0325-00			TRANSISTOR:SILICON,PNP,SEL FROM 2N4258	80009	151-0325-00
Q4424	151-1005-00			TRANSISTOR:SILICON,JFE,N-CHANNEL	80009	151-1005-00
Q4440	151-0190-00			TRANSISTOR:SILICON,NPN	80009	151-0190-00
Q4442	151-0190-00			TRANSISTOR:SILICON,NPN	80009	151-0190-00
Q4448	151-0410-00			TRANSISTOR:SILICON,PNP	80009	151-0410-00
Q4454	151-0410-00			TRANSISTOR:SILICON,PNP	80009	151-0410-00
Q4488	151-0302-00			TRANSISTOR:SILICON,NPN	80009	151-0302-00
Q4500A,B	151-1049-00			TRANSISTOR:SILICON,JFE,N-CHANNEL,DUAL	80009	151-1049-00
Q4510	151-1005-00			TRANSISTOR:SILICON,JFE,N-CHANNEL	80009	151-1005-00
Q4512A,B	151-1049-00			TRANSISTOR:SILICON,JFE,N-CHANNEL,DUAL	80009	151-1049-00
Q4522	151-0223-00			TRANSISTOR:SILICON,NPN	80009	151-0223-00
Q4532	151-0223-00			TRANSISTOR:SILICON,NPN	80009	151-0223-00
Q4572	151-0192-00			TRANSISTOR:SILICON,NPN,SEL FROM MPS6521	80009	151-0192-00
Q4592	151-0402-00			TRANSISTOR:SILICON,NPN,SEL FROM 3571TP	80009	151-0402-00
Q4604A,B	151-1049-00			TRANSISTOR:SILICON,JFE,N-CHANNEL,DUAL	80009	151-1049-00
Q4612	151-1005-00			TRANSISTOR:SILICON,JFE,N-CHANNEL	80009	151-1005-00
Q4644	151-0410-00			TRANSISTOR:SILICON,PNP	80009	151-0410-00
Q4646	151-0190-00			TRANSISTOR:SILICON,NPN	80009	151-0190-00
Q4714	151-0325-00			TRANSISTOR:SILICON,PNP,SEL FROM 2N4258	80009	151-0325-00
Q4732	151-1005-00			TRANSISTOR:SILICON,JFE,N-CHANNEL	80009	151-1005-00
Q4734	151-1005-00			TRANSISTOR:SILICON,JFE,N-CHANNEL	80009	151-1005-00
Q4832	151-1005-00			TRANSISTOR:SILICON,JFE,N-CHANNEL	80009	151-1005-00
Q4844	151-0190-00			TRANSISTOR:SILICON,NPN	80009	151-0190-00
Q4846	151-0410-00			TRANSISTOR:SILICON,PNP	80009	151-0410-00
Q4878	151-0190-00			TRANSISTOR:SILICON,NPN	80009	151-0190-00
Q4880	151-0198-00			TRANSISTOR:SILICON,NPN,SEL FROM MPS918	80009	151-0198-00
Q5114	151-1078-00			TRANSISTOR:SILICON,JFE,N-CHANNEL	80009	151-1078-00
Q5116	151-1005-00			TRANSISTOR:SILICON,JFE,N-CHANNEL	80009	151-1005-00
Q5195	151-1078-00			TRANSISTOR:SILICON,JFE,N-CHANNEL	80009	151-1078-00
Q5214	151-1078-00			TRANSISTOR:SILICON,JFE,N-CHANNEL	80009	151-1078-00
Q5216	151-1005-00			TRANSISTOR:SILICON,JFE,N-CHANNEL	80009	151-1005-00
Q5295	151-1078-00			TRANSISTOR:SILICON,JFE,N-CHANNEL	80009	151-1078-00
Q5314	151-1078-00			TRANSISTOR:SILICON,JFE,N-CHANNEL	80009	151-1078-00
Q5316	151-1005-00			TRANSISTOR:SILICON,JFE,N-CHANNEL	80009	151-1005-00
Q5395	151-1078-00			TRANSISTOR:SILICON,JFE,N-CHANNEL	80009	151-1078-00
Q5612	151-1078-00			TRANSISTOR:SILICON,JFE,N-CHANNEL	80009	151-1078-00
Q5618	151-1005-00			TRANSISTOR:SILICON,JFE,N-CHANNEL	80009	151-1005-00
Q5694	151-1078-00			TRANSISTOR:SILICON,JFE,N-CHANNEL	80009	151-1078-00
Q5695	151-1078-00			TRANSISTOR:SILICON,JFE,N-CHANNEL	80009	151-1078-00

Ckt No.	Tektronix Part No.	Serial/Model No. Eff	Dscont	Name & Description	Mfr Code	Mfr Part Number
Q5716	151-1078-00			TRANSISTOR:SILICON,JFE,N-CHANNEL	80009	151-1078-00
Q5722	151-1005-00			TRANSISTOR:SILICON,JFE,N-CHANNEL	80009	151-1005-00
Q5806	151-0301-00			TRANSISTOR:SILICON,PNP	04713	2N2907A
Q5822	151-1078-00			TRANSISTOR:SILICON,JFE,N-CHANNEL	80009	151-1078-00
Q5836	151-1005-00			TRANSISTOR:SILICON,JFE,N-CHANNEL	80009	151-1005-00
Q5895	151-1078-00			TRANSISTOR:SILICON,JFE,N-CHANNEL	80009	151-1078-00
Q9035	151-0349-00			TRANSISTOR:SILICON,NPN,SEL FROM MJE2801	80009	151-0349-00
Q9055	151-0349-00			TRANSISTOR:SILICON,NPN,SEL FROM MJE2801	80009	151-0349-00
Q9085	151-0349-00			TRANSISTOR:SILICON,NPN,SEL FROM MJE2801	80009	151-0349-00
Q9800	151-0301-00			TRANSISTOR:SILICON,PNP	04713	2N2907A
Q9802	151-0188-00			TRANSISTOR:SILICON,PNP	80009	151-0188-00
Q9804	151-0190-00			TRANSISTOR:SILICON,NPN	80009	151-0190-00
Q9806	151-0190-00			TRANSISTOR:SILICON,NPN	80009	151-0190-00
Q9830	151-0301-00			TRANSISTOR:SILICON,PNP	04713	2N2907A
Q9832	151-0188-00			TRANSISTOR:SILICON,PNP	80009	151-0188-00
Q9834	151-0190-00			TRANSISTOR:SILICON,NPN	80009	151-0190-00
Q9836	151-0190-00			TRANSISTOR:SILICON,NPN	80009	151-0190-00
Q9850	151-0301-00			TRANSISTOR:SILICON,PNP	04713	2N2907A
Q9852	151-0188-00			TRANSISTOR:SILICON,PNP	80009	151-0188-00
Q9854	151-0190-00			TRANSISTOR:SILICON,NPN	80009	151-0190-00
Q9856	151-0190-00			TRANSISTOR:SILICON,NPN	80009	151-0190-00
R525	315-0102-00	XB060372		RES.,FXD,CMPSN:1K OHM,5%,0.25W	01121	CB1025
R530	315-0102-00	XB060372		RES.,FXD,CMPSN:1K OHM,5%,0.25W	01121	CB1025
R535	315-0102-00	XB060372		RES.,FXD,CMPSN:1K OHM,5%,0.25W	01121	CB1025
R550	315-0472-00	XB060372		RES.,FXD,CMPSN:4.7K OHM,5%,0.25W	01121	CB4725
R555	315-0472-00	XB060372		RES.,FXD,CMPSN:4.7K OHM,5%,0.25W	01121	CB4725
R649	315-0750-00			RES.,FXD,CMPSN:75 OHM,5%,0.25W	01121	CB7505
R656	315-0472-00			RES.,FXD,CMPSN:4.7K OHM,5%,0.25W	01121	CB4725
R658	315-0272-00			RES.,FXD,CMPSN:2.7K OHM,5%,0.25W	01121	CB2725
R659	315-0272-00			RES.,FXD,CMPSN:2.7K OHM,5%,0.25W	01121	CB2725
R672	315-0471-00			RES.,FXD,CMPSN:470 OHM,5%,0.25W	01121	CB4715
R673	315-0153-00			RES.,FXD,CMPSN:15K OHM,5%,0.25W	01121	CB1535
R674	321-0364-00			RES.,FXD,FILM:60.4K OHM,1%,0.125W	91637	MFF1816G60401F
R675	321-0356-00			RES.,FXD,FILM:49.9K OHM,1%,0.125W	91637	MFF1816G49901F
R676	321-0268-00			RES.,FXD,FILM:6.04K OHM,1%,0.125W	91637	MFF1816G60400F
R677	321-0289-00			RES.,FXD,FILM:10K OHM,1%,0.125W	91637	MFF1816G10001F
R678	311-1230-00			RES.,VAR,NONWIR:20K OHM,20%,0.50W	32997	3386F-T04-203
R679	315-0470-00			RES.,FXD,CMPSN:47 OHM,5%,0.25W	01121	CB4705
R683	315-0103-00			RES.,FXD,CMPSN:10K OHM,5%,0.25W	01121	CB1035
R684	315-0105-00			RES.,FXD,CMPSN:1M OHM,5%,0.25W	01121	CB1055
R685	321-0164-00			RES.,FXD,FILM:499 OHM,1%,0.125W	91637	MFF1816G499R0F
R687	311-1227-00			RES.,VAR,NONWIR:5K OHM,20%,0.50W	32997	3386F-T04-502
R688	311-1232-00			RES.,VAR,NONWIR:50K OHM,20%,0.50W	32997	3386F-T04-503
R689	321-0306-00	B010100	B039999	RES.,FXD,FILM:15K OHM,1%,0.125W	91637	MFF1816G15001F
R689	321-0289-00	B040000		RES.,FXD,FILM:10K OHM,1%,0.125W	91637	MFF1816G10001F
R694	315-0392-00			RES.,FXD,CMPSN:3.9K OHM,5%,0.25W	01121	CB3925
R695	321-0164-00			RES.,FXD,FILM:499 OHM,1%,0.125W	91637	MFF1816G499R0F
R696	321-0277-00			RES.,FXD,FILM:7.5K OHM,1%,0.125W	91637	MFF1816G75000F
R697	321-0260-00			RES.,FXD,FILM:4.99K OHM,1%,0.125W	91637	MFF1816G49900F
R698	315-0512-00			RES.,FXD,CMPSN:5.1K OHM,5%,0.25W	01121	CB5125
R930	315-0153-00			RES.,FXD,CMPSN:15K OHM,5%,0.25W	01121	CB1535
R950	315-0752-00			RES.,FXD,CMPSN:7.5K OHM,5%,0.25W	01121	CB7525
R992	315-0122-00			RES.,FXD,CMPSN:1.2K OHM,5%,0.25W	01121	CB1225
R994	315-0101-00			RES.,FXD,CMPSN:100 OHM,5%,0.25W	01121	CB1015
R996	301-0102-00			RES.,FXD,CMPSN:1K OHM,5%,0.50W	01121	EB1025
R997	315-0153-00			RES.,FXD,CMPSN:15K OHM,5%,0.25W	01121	CB1535
R1102	321-0327-00			RES.,FXD,FILM:24.9K OHM,1%,0.125W	91637	MFF1816G24901F

Ckt No.	Tektronix Part No.	Serial/Model No. Eff	Dscont	Name & Description	Mfr Code	Mfr Part Number
R1106	315-0472-00			RES.,FXD,CMPSN:4.7K OHM,5%,0.25W	01121	CB4725
R1134	315-0271-00			RES.,FXD,CMPSN:270 OHM,5%,0.25W	01121	CB2715
R1148	315-0100-00			RES.,FXD,CMPSN:10 OHM,5%,0.25W	01121	CB1005
R1156	321-0114-00			RES.,FXD,FILM:150 OHM,1%,0.125W	91637	MFF1816G150R0F
R1158	315-0101-00			RES.,FXD,CMPSN:100 OHM,5%,0.25W	01121	CB1015
R1160	315-0101-00			RES.,FXD,CMPSN:100 OHM,5%,0.25W	01121	CB1015
R1162	315-0101-00			RES.,FXD,CMPSN:100 OHM,5%,0.25W	01121	CB1015
R1166	315-0271-00			RES.,FXD,CMPSN:270 OHM,5%,0.25W	01121	CB2715
R1172	321-0152-00			RES.,FXD,FILM:374 OHM,1%,0.125W	91637	MFF1816G374R0F
R1178	315-0101-00			RES.,FXD,CMPSN:100 OHM,5%,0.25W	01121	CB1015
R1182	321-0155-00			RES.,FXD,FILM:402 OHM,1%,0.125W	91637	MFF1816G402R0F
R1186	321-0068-00			RES.,FXD,FILM:49.9 OHM,1%,0.125W	91637	MFF1816G49R90F
R1188	315-0100-00			RES.,FXD,CMPSN:10 OHM,5%,0.25W	01121	CB1005
R1189	315-0471-00			RES.,FXD,CMPSN:470 OHM,5%,0.25W	01121	CB4715
R1193	315-0391-00			RES.,FXD,CMPSN:390 OHM,5%,0.25W	01121	CB3915
R1194	308-0243-00			RES.,FXD,WW:240 OHM,5%,3W	91637	CW2BB240R0J
R1196	315-0752-00			RES.,FXD,CMPSN:7.5K OHM,5%,0.25W	01121	CB7525
R1210	321-0327-00			RES.,FXD,FILM:24.9K OHM,1%,0.125W	91637	MFF1816G24901F
R1216	315-0101-00			RES.,FXD,CMPSN:100 OHM,5%,0.25W	01121	CB1015
R1225	315-0392-00			RES.,FXD,CMPSN:3.9K OHM,5%,0.25W	01121	CB3925
R1230	315-0153-00			RES.,FXD,CMPSN:15K OHM,5%,0.25W	01121	CB1535
R1231	315-0102-00			RES.,FXD,CMPSN:1K OHM,5%,0.25W	01121	CB1025
R1232	321-0306-00			RES.,FXD,FILM:15K OHM,1%,0.125W	91637	MFF1816G15001F
R1236	321-0193-00			RES.,FXD,FILM:1K OHM,1%,0.125W	91637	MFF1816G10000F
R1237	321-0193-00			RES.,FXD,FILM:1K OHM,1%,0.125W	91637	MFF1816G10000F
R1264	321-0152-00			RES.,FXD,FILM:374 OHM,1%,0.125W	91637	MFF1816G374R0F
R1266	315-0472-00			RES.,FXD,CMPSN:4.7K OHM,5%,0.25W	01121	CB4725
R1268	321-0231-00			RES.,FXD,FILM:2.49K OHM,1%,0.125W	91637	MFF1816G24900F
R1270	321-0289-00			RES.,FXD,FILM:10K OHM,1%,0.125W	91637	MFF1816G10001F
R1272	321-0138-00			RES.,FXD,FILM:267 OHM,1%,0.125W	91637	MFF1816G267R0F
R1274	315-0101-00			RES.,FXD,CMPSN:100 OHM,5%,0.25W	01121	CB1015
R1276	321-0289-00			RES.,FXD,FILM:10K OHM,1%,0.125W	91637	MFF1816G10001F
R1282	315-0331-00			RES.,FXD,CMPSN:330 OHM,5%,0.25W	01121	CB3315
R1284	315-0100-00			RES.,FXD,CMPSN:10 OHM,5%,0.25W	01121	CB1005
R1290	315-0271-00			RES.,FXD,CMPSN:270 OHM,5%,0.25W	01121	CB2715
R1292	321-0241-00			RES.,FXD,FILM:3.16K OHM,1%,0.125W	91637	MFF1816G31600F
R1294	321-0296-00			RES.,FXD,FILM:11.8K OHM,1%,0.125W	91637	MFF1816G11801F
R1312	321-0193-00			RES.,FXD,FILM:1K OHM,1%,0.125W	91637	MFF1816G10000F
R1325	321-0293-00			RES.,FXD,FILM:11K OHM,1%,0.125W	91637	MFF1816G11001F
R1331	315-0101-00			RES.,FXD,CMPSN:100 OHM,5%,0.25W	01121	CB1015
R1332	315-0102-00			RES.,FXD,CMPSN:1K OHM,5%,0.25W	01121	CB1025
R1334	321-0219-00			RES.,FXD,FILM:1.87K OHM,1%,0.125W	91637	MFF1816G18700F
R1336	315-0100-00			RES.,FXD,CMPSN:10 OHM,5%,0.25W	01121	CB1005
R1337	315-0392-00			RES.,FXD,CMPSN:3.9K OHM,5%,0.25W	01121	CB3925
R1338	321-0277-00			RES.,FXD,FILM:7.5K OHM,1%,0.125W	91637	MFF1816G75000F
R1339	321-0164-00			RES.,FXD,FILM:499 OHM,1%,0.125W	91637	MFF1816G499R0F
R1356	315-0101-00			RES.,FXD,CMPSN:100 OHM,5%,0.25W	01121	CB1015
R1358	315-0102-00			RES.,FXD,CMPSN:1K OHM,5%,0.25W	01121	CB1025
R1378	321-0251-00			RES.,FXD,FILM:4.02K OHM,1%,0.125W	91637	MFF1816G40200F
R1382	315-0102-00			RES.,FXD,CMPSN:1K OHM,5%,0.25W	01121	CB1025
R1386	315-0151-00			RES.,FXD,CMPSN:150 OHM,5%,0.25W	01121	CB1515
R1390	321-0293-00			RES.,FXD,FILM:11K OHM,1%,0.125W	91637	MFF1816G11001F
R1412	315-0472-00			RES.,FXD,CMPSN:4.7K OHM,5%,0.25W	01121	CB4725
R1428	321-0231-00			RES.,FXD,FILM:2.49K OHM,(NOM VALUE),SEL	91637	MFF1816G24900F
R1430	315-0101-00			RES.,FXD,CMPSN:100 OHM,5%,0.25W	01121	CB1015
R1432	315-0102-00			RES.,FXD,CMPSN:1K OHM,5%,0.25W	01121	CB1025
R1438	315-0392-00			RES.,FXD,CMPSN:3.9K OHM,5%,0.25W	01121	CB3925

Ckt No.	Tektronix Part No.	Serial/Model No. Eff	Dscont	Name & Description	Mfr Code	Mfr Part Number
R1440	321-0306-00			RES.,FXD,FILM:15K OHM,1%,0.125W	91637	MFF1816G15001F
R1442	315-0101-00			RES.,FXD,CMPSN:100 OHM,5%,0.25W	01121	CB1015
R1444	321-0251-00			RES.,FXD,FILM:4.02K OHM,1%,0.125W	91637	MFF1816G40200F
R1446	315-0221-00			RES.,FXD,CMPSN:220 OHM,5%,0.25W	01121	CB2215
R1450	321-0210-00			RES.,FXD,FILM:1.5K OHM,1%,0.125W	91637	MFF1816G15000F
R1454	301-0152-00			RES.,FXD,CMPSN:1.5K OHM,5%,0.50W	01121	EB1525
R1456	321-0193-00			RES.,FXD,FILM:1K OHM,1%,0.125W	91637	MFF1816G10000F
R1458	315-0101-00			RES.,FXD,CMPSN:100 OHM,5%,0.25W	01121	CB1015
R1460	315-0105-00	B010100	B039999	RES.,FXD,CMPSN:1M OHM,5%,0.25W	01121	CB1055
R1460	315-0105-00	B040000		RES.,FXD,CMPSN:1M OHM,(NOM VALUE),SEL	01121	CB1055
R1464	315-0202-00			RES.,FXD,CMPSN:2K OHM,5%,0.25W	01121	CB2025
R1466	321-0138-00			RES.,FXD,FILM:267 OHM,1%,0.125W	91637	MFF1816G267R0F
R1468	315-0101-00			RES.,FXD,CMPSN:100 OHM,5%,0.25W	01121	CB1015
R1470	321-0193-00			RES.,FXD,FILM:1K OHM,1%,0.125W	91637	MFF1816G10000F
R1480	321-0233-00			RES.,FXD,FILM:2.61K OHM,1%,0.125W	91637	MFF1816G26100F
R1482	321-0251-00			RES.,FXD,FILM:4.02K OHM,1%,0.125W	91637	MFF1816G40200F
R1488	315-0472-00			RES.,FXD,CMPSN:4.7K OHM,5%,0.25W	01121	CB4725
R1490	315-0101-00			RES.,FXD,CMPSN:100 OHM,5%,0.25W	01121	CB1015
R1492	321-0145-00			RES.,FXD,FILM:316 OHM,1%,0.125W	91637	MFF1816G316R0F
R1500	321-0318-00			RES.,FXD,FILM:20K OHM,1%,0.125W	91637	MFF1816G20001F
R1508	321-0210-00			RES.,FXD,FILM:1.5K OHM,1%,0.125W	91637	MFF1816G15000F
R1509	321-0260-00			RES.,FXD,FILM:4.99K OHM,1%,0.125W	91637	MFF1816G49900F
R1510	321-0289-00			RES.,FXD,FILM:10K OHM,1%,0.125W	91637	MFF1816G10001F
R1511	321-0251-00			RES.,FXD,FILM:4.02K OHM,1%,0.125W	91637	MFF1816G40200F
R1513	321-0280-00			RES.,FXD,FILM:8.06K OHM,1%,0.125W	91637	MFF1816G80600F
R1514	321-0260-00			RES.,FXD,FILM:4.99K OHM,1%,0.125W	91637	MFF1816G49900F
R1516	321-0277-00			RES.,FXD,FILM:7.5K OHM,1%,0.125W	91637	MFF1816G75000F
R1520	321-0277-00			RES.,FXD,FILM:7.5K OHM,1%,0.125W	91637	MFF1816G75000F
R1522	321-0207-00			RES.,FXD,FILM:1.4K OHM,1%,0.125W	91637	MFF1816G14000F
R1530	315-0392-00			RES.,FXD,CMPSN:3.9K OHM,5%,0.25W	01121	CB3925
R1532	315-0472-00			RES.,FXD,CMPSN:4.7K OHM,5%,0.25W	01121	CB4725
R1534	315-0101-00			RES.,FXD,CMPSN:100 OHM,5%,0.25W	01121	CB1015
R1542	315-0362-00			RES.,FXD,CMPSN:3.6K OHM,5%,0.25W	01121	CB3625
R1544	321-0210-00			RES.,FXD,FILM:1.5K OHM,1%,0.125W	91637	MFF1816G15000F
R1552	308-0298-00			RES.,FXD,WW:560 OHM,5%,3W	91637	CW2B-B560R0J
R1554	315-0123-00			RES.,FXD,CMPSN:12K OHM,5%,0.25W	01121	CB1235
R1560	321-0373-00			RES.,FXD,FILM:75K OHM, 1%,0.125W	91637	MFF1816G75001F
R1568	315-0152-00	B010100	B019999	RES.,FXD,CMPSN:1.5K OHM,5%,0.25W	01121	CB1525
R1568	315-0271-00	B020000		RES.,FXD,CMPSN:270 OHM,5%,0.25W	01121	CB2715
R1574	315-0393-00	B010100	B060619	RES.,FXD,CMPSN:39K OHM,(NOM VALUE),SEL	01121	CB3935
R1574	315-0273-00	B060620		RES.,FXD,CMPSN:27K OHM,(NOM VALUE),SEL	01121	CB2735
R1578	315-0471-00			RES.,FXD,CMPSN:470 OHM,5%,0.25W	01121	CB4715
R1580	321-0157-00			RES.,FXD,FILM:422 OHM,(NOM VALUE),SEL	91637	MFF1816G422R0F
R1590	321-0164-00			RES.,FXD,FILM:499 OHM,1%,0.125W	91637	MFF1816G499R0F
R1594	315-0151-00			RES.,FXD,CMPSN:150 OHM,5%,0.25W	01121	CB1515
R1600	315-0102-00			RES.,FXD,CMPSN:1K OHM,5%,0.25W	01121	CB1025
R1602	315-0101-00			RES.,FXD,CMPSN:100 OHM,5%,0.25W	01121	CB1015
R1606	321-0184-00			RES.,FXD,FILM:806 OHM,(NOM VALUE),SEL	91637	MFF1816G806R0F
R1609	321-0260-00			RES.,FXD,FILM:4.99K OHM,1%,0.125W	91637	MFF1816G49900F
R1613	321-0260-00	B010100	B029999	RES.,FXD,FILM:4.99K OHM,1%,0.125W	91637	MFF1816G49900F
R1613	321-0286-00	B030000		RES.,FXD,FILM:9.31K OHM,(NOM VALUE),SEL	91637	MFF1816G93100F
R1616	321-0147-00			RES.,FXD,FILM:332 OHM,(NOM VALUE),SEL	91637	MFF1816G332R0F
R1618	315-0103-00			RES.,FXD,CMPSN:10K OHM,5%,0.25W	01121	CB1035
R1620	315-0101-00			RES.,FXD,CMPSN:100 OHM,5%,0.25W	01121	CB1015
R1626	315-0101-00			RES.,FXD,CMPSN:100 OHM,5%,0.25W	01121	CB1015
R1634	315-0153-00			RES.,FXD,CMPSN:15K OHM,5%,0.25W	01121	CB1535
R1640	315-0471-00			RES.,FXD,CMPSN:470 OHM,5%,0.25W	01121	CB4715

Ckt No.	Tektronix Part No.	Serial/Model No. Eff	Dscont	Name & Description	Mfr Code	Mfr Part Number
R1654	315-0101-00			RES.,FXD,CMPSN:100 OHM,5%,0.25W	01121	CB1015
R1656	321-0373-00			RES.,FXD,FILM:75K OHM, 1%,0.125W	91637	MFF1816G75001F
R1657	321-0373-00			RES.,FXD,FILM:75K OHM, 1%,0.125W	91637	MFF1816G75001F
R1658	315-0623-00			RES.,FXD,CMPSN:62K OHM,5%,0.25W	01121	CB6235
R1660	315-0103-00			RES.,FXD,CMPSN:10K OHM,5%,0.25W	01121	CB1035
R1670	315-0102-00			RES.,FXD,CMPSN:1K OHM,5%,0.25W	01121	CB1025
R1672	----- -----	B010100	B029999	(SELECTED,ADDED IF NECESSARY)		
R1672	321-0179-00	B030000		RES.,FXD,FILM:715 OHM,(NOM VALUE),SEL	91637	MFF1816G715R0F
R1674	315-0271-00			RES.,FXD,CMPSN:270 OHM,5%,0.25W	01121	CB2715
R1676	315-0103-00			RES.,FXD,CMPSN:10K OHM,5%,0.25W	01121	CB1035
R1678	321-0294-00			RES.,FXD,FILM:11.3K OHM,1%,0.125W	91637	MFF1816G11301F
R1680	315-0242-00			RES.,FXD,CMPSN:2.4K OHM,5%,0.25W	01121	CB2425
R1682	315-0101-00			RES.,FXD,CMPSN:100 OHM,5%,0.25W	01121	CB1015
R1692	321-0164-00			RES.,FXD,FILM:499 OHM,1%,0.125W	91637	MFF1816G499R0F
R1700	321-0289-00			RES.,FXD,FILM:10K OHM,1%,0.125W	91637	MFF1816G10001F
R1704	315-0102-00			RES.,FXD,CMPSN:1K OHM,5%,0.25W	01121	CB1025
R1706	321-0306-00			RES.,FXD,FILM:15K OHM,1%,0.125W	91637	MFF1816G15001F
R1710	321-0277-00			RES.,FXD,FILM:7.5K OHM,1%,0.125W	91637	MFF1816G75000F
R1712	321-0306-00			RES.,FXD,FILM:15K OHM,1%,0.125W	91637	MFF1816G15001F
R1716	321-0277-00			RES.,FXD,FILM:7.5K OHM,1%,0.125W	91637	MFF1816G75000F
R1720	315-0102-00			RES.,FXD,CMPSN:1K OHM,5%,0.25W	01121	CB1025
R1726	315-0201-00			RES.,FXD,CMPSN:200 OHM,5%,0.25W	01121	CB2015
R1728	321-0167-00			RES.,FXD,FILM:536 OHM,1%,0.125W	91637	MFF1816G536R0F
R1730	321-0335-00			RES.,FXD,FILM:30.1K OHM,1%,0.125W	91637	MFF1816G30101F
R1734	321-0306-00			RES.,FXD,FILM:15K OHM,1%,0.125W	91637	MFF1816G15001F
R1736	321-0335-00			RES.,FXD,FILM:30.1K OHM,1%,0.125W	91637	MFF1816G30101F
R1740	321-0306-00			RES.,FXD,FILM:15K OHM,1%,0.125W	91637	MFF1816G15001F
R1744	315-0201-00			RES.,FXD,CMPSN:200 OHM,5%,0.25W	01121	CB2015
R1746	321-0160-00			RES.,FXD,FILM:453 OHM,1%,0.125W	91637	MFF1816G453R0F
R1748	315-0100-00			RES.,FXD,CMPSN:10 OHM,5%,0.25W	01121	CB1005
R1750	321-0085-00			RES.,FXD,FILM:75 OHM,1%,0.125W	91637	MFF1816G75R00F
R1752	321-0085-00			RES.,FXD,FILM:75 OHM,1%,0.125W	91637	MFF1816G75R00F
R1754	321-0085-00			RES.,FXD,FILM:75 OHM,1%,0.125W	91637	MFF1816G75R00F
R1756	315-0102-00			RES.,FXD,CMPSN:1K OHM,5%,0.25W	01121	CB1025
R1758	315-0103-00			RES.,FXD,CMPSN:10K OHM,5%,0.25W	01121	CB1035
R1760	315-0102-00			RES.,FXD,CMPSN:1K OHM,5%,0.25W	01121	CB1025
R1766	315-0102-00			RES.,FXD,CMPSN:1K OHM,5%,0.25W	01121	CB1025
R1770	315-0100-00			RES.,FXD,CMPSN:10 OHM,5%,0.25W	01121	CB1005
R1772	315-0104-00			RES.,FXD,CMPSN:100K OHM,5%,0.25W	01121	CB1045
R1776	315-0107-00			RES.,FXD,CMPSN:100M OHM,5%,0.25W	01121	CB1075
R1780	321-0183-00			RES.,FXD,FILM:787 OHM,1%,0.125W	91637	MFF1816G787R0F
R1782	315-0304-00			RES.,FXD,CMPSN:300K OHM,(NOM VALUE),SEL	01121	CB3045
R1790	315-0101-00			RES.,FXD,CMPSN:100 OHM,5%,0.25W	01121	CB1015
R1794	315-0393-00			RES.,FXD,CMPSN:39K OHM,5%,0.25W	01121	CB3935
R1806	321-0306-00			RES.,FXD,FILM:15K OHM,1%,0.125W	91637	MFF1816G15001F
R1818	321-0306-00			RES.,FXD,FILM:15K OHM,1%,0.125W	91637	MFF1816G15001F
R1826	321-0306-00			RES.,FXD,FILM:15K OHM,1%,0.125W	91637	MFF1816G15001F
R1836	321-0306-00			RES.,FXD,FILM:15K OHM,1%,0.125W	91637	MFF1816G15001F
R1850	315-0153-00			RES.,FXD,CMPSN:15K OHM,5%,0.25W	01121	CB1535
R1852	315-0152-00			RES.,FXD,CMPSN:1.5K OHM,5%,0.25W	01121	CB1525
R1858	311-1232-00			RES.,VAR,NONWIR:50K OHM,20%,0.50W	32997	3386F-T04-503
R1860	315-0182-00			RES.,FXD,CMPSN:1.8K OHM,5%,0.25W	01121	CB1825
R1864	315-0104-00			RES.,FXD,CMPSN:100K OHM,5%,0.25W	01121	CB1045
R1868	315-0395-00			RES.,FXD,CMPSN:3.9M OHM,5%,0.25W	01121	CB3955
R1874	315-0153-00			RES.,FXD,CMPSN:15K OHM,5%,0.25W	01121	CB1535
R1875	311-1232-00			RES.,VAR,NONWIR:50K OHM,20%,0.50W	32997	3386F-T04-503
R1876	315-0472-00			RES.,FXD,CMPSN:4.7K OHM,5%,0.25W	01121	CB4725

Ckt No.	Tektronix Part No.	Serial/Model No. Eff	Dscont	Name & Description	Mfr Code	Mfr Part Number
R1882	321-0332-00			RES.,FXD,FILM:28K OHM,(NOM VALUE),SEL	91637	MFF1816G28001F
R1884	315-0153-00			RES.,FXD,CMPSN:15K OHM,5%,0.25W	01121	CB1535
R1886	321-0085-00	B010100	B029999	RES.,FXD,FILM:75 OHM,1%,0.125W	91637	MFF1816G75R00F
R1886	323-0085-00	B030000		RES.,FXD,FILM:75 OHM,1%,0.50W	91637	MFF1226G75R00F
R1888	----- -----	B010100	B029999	(SELECTED,ADDED IF NECESSARY)		
R1888	315-0100-00	B030000		RES.,FXD,CMPSN:10 OHM,(NOM VALUE),SEL	01121	CB1005
	----- -----			(ADDED IF NECESSARY)		
R1889	321-0360-00			RES.,FXD,FILM:54.9K OHM,(NOM VALUE),SEL	91637	MFF1816G54901F
R1890	321-0389-00			RES.,FXD,FILM:110K OHM,1%,0.125W	91637	MFF1816G11002F
R1892	321-0164-00			RES.,FXD,FILM:499 OHM,1%,0.125W	91637	MFF1816G499R0F
R2190	315-0102-00			RES.,FXD,CMPSN:1K OHM,5%,0.25W	01121	CB1025
R2194	315-0822-00			RES.,FXD,CMPSN:8.2K OHM,5%,0.25W	01121	CB8225
R2290	315-0472-00			RES.,FXD,CMPSN:4.7K OHM,5%,0.25W	01121	CB4725
R2292	321-0164-00			RES.,FXD,FILM:499 OHM,1%,0.125W	91637	MFF1816G499R0F
R2294	321-0164-00			RES.,FXD,FILM:499 OHM,1%,0.125W	91637	MFF1816G499R0F
R2330	321-0231-00			RES.,FXD,FILM:2.49K OHM,1%,0.125W	91637	MFF1816G24900F
R2332	321-0231-00			RES.,FXD,FILM:2.49K OHM,1%,0.125W	91637	MFF1816G24900F
R2340	321-0289-00			RES.,FXD,FILM:10K OHM,1%,0.125W	91637	MFF1816G10001F
R2342	321-0289-00			RES.,FXD,FILM:10K OHM,1%,0.125W	91637	MFF1816G10001F
R2354	321-0277-00			RES.,FXD,FILM:7.5K OHM,1%,0.125W	91637	MFF1816G75000F
R2360	321-0277-00			RES.,FXD,FILM:7.5K OHM,1%,0.125W	91637	MFF1816G75000F
R2364	315-0102-00			RES.,FXD,CMPSN:1K OHM,5%,0.25W	01121	CB1025
R2370	315-0101-00			RES.,FXD,CMPSN:100 OHM,5%,0.25W	01121	CB1015
R2390	315-0101-00			RES.,FXD,CMPSN:100 OHM,5%,0.25W	01121	CB1015
R2392	315-0102-00			RES.,FXD,CMPSN:1K OHM,5%,0.25W	01121	CB1025
R2460	315-0472-00			RES.,FXD,CMPSN:4.7K OHM,5%,0.25W	01121	CB4725
R2480	321-0193-00			RES.,FXD,FILM:1K OHM,1%,0.125W	91637	MFF1816G10000F
R2482	321-0164-00			RES.,FXD,FILM:499 OHM,1%,0.125W	91637	MFF1816G499R0F
R2484	321-0164-00			RES.,FXD,FILM:499 OHM,1%,0.125W	91637	MFF1816G499R0F
R2486	315-0472-00			RES.,FXD,CMPSN:4.7K OHM,5%,0.25W	01121	CB4725
R2488	315-0822-00			RES.,FXD,CMPSN:8.2K OHM,5%,0.25W	01121	CB8225
R2490	315-0102-00			RES.,FXD,CMPSN:1K OHM,5%,0.25W	01121	CB1025
R2560	315-0101-00			RES.,FXD,CMPSN:100 OHM,5%,0.25W	01121	CB1015
R2570	315-0101-00			RES.,FXD,CMPSN:100 OHM,5%,0.25W	01121	CB1015
R2572	315-0101-00			RES.,FXD,CMPSN:100 OHM,5%,0.25W	01121	CB1015
R2574	321-0193-00			RES.,FXD,FILM:1K OHM,1%,0.125W	91637	MFF1816G10000F
R2590	315-0101-00			RES.,FXD,CMPSN:100 OHM,5%,0.25W	01121	CB1015
R2592	315-0102-00			RES.,FXD,CMPSN:1K OHM,5%,0.25W	01121	CB1025
R2990	311-1221-00			RES.,VAR,NONWIR:50 OHM,20%,0.50W	32997	3386F-T04-500
R3000	315-0102-00			RES.,FXD,CMPSN:1K OHM,5%,0.25W	01121	CB1025
R3012	315-0274-00			RES.,FXD,CMPSN:270K OHM,5%,0.25W	01121	CB2745
R3018	321-0372-00			RES.,FXD,FILM:73.2K OHM,1%,0.125W	91637	MFF1816G73201F
R3022	315-0153-00			RES.,FXD,CMPSN:15K OHM,5%,0.25W	01121	CB1535
R3024	315-0472-00			RES.,FXD,CMPSN:4.7K OHM,5%,0.25W	01121	CB4725
R3132	315-0102-00			RES.,FXD,CMPSN:1K OHM,5%,0.25W	01121	CB1025
R3136	315-0102-00			RES.,FXD,CMPSN:1K OHM,5%,0.25W	01121	CB1025
R3138	315-0153-00			RES.,FXD,CMPSN:15K OHM,5%,0.25W	01121	CB1535
R3140	315-0332-00			RES.,FXD,CMPSN:3.3K OHM,5%,0.25W	01121	CB3325
R3146	315-0104-00			RES.,FXD,CMPSN:100K OHM,5%,0.25W	01121	CB1045
R3148	321-0356-00			RES.,FXD,FILM:49.9K OHM,1%,0.125W	91637	MFF1816G49901F
R3154	321-0327-00			RES.,FXD,FILM:24.9K OHM,1%,0.125W	91637	MFF1816G24901F
R3156	311-1228-00			RES.,VAR,NONWIR:10K OHM,20%,0.50W	32997	3386F-T04-103
R3158	315-0102-00			RES.,FXD,CMPSN:1K OHM,5%,0.25W	01121	CB1025
R3164	321-0306-00			RES.,FXD,FILM:15K OHM,1%,0.125W	91637	MFF1816G15001F
R3206	315-0100-00			RES.,FXD,CMPSN:10 OHM,5%,0.25W	01121	CB1005
R3208	315-0101-00			RES.,FXD,CMPSN:100 OHM,5%,0.25W	01121	CB1015
R3210	315-0103-00			RES.,FXD,CMPSN:10K OHM,5%,0.25W	01121	CB1035

Ckt No.	Tektronix Part No.	Serial/Model No. Eff	Dscont	Name & Description	Mfr Code	Mfr Part Number
R3216	315-0621-00			RES.,FXD,CMPSN:620 OHM,5%,0.25W	01121	CB6215
R3220	321-0380-00			RES.,FXD,FILM:88.7K OHM,1%,0.125W	91637	MFF1816G88701F
R3222	315-0623-00			RES.,FXD,CMPSN:62K OHM,5%,0.25W	01121	CB6235
R3224	315-0472-00			RES.,FXD,CMPSN:4.7K OHM,5%,0.25W	01121	CB4725
R3230	315-0272-00			RES.,FXD,CMPSN:2.7K OHM,5%,0.25W	01121	CB2725
R3231	315-0396-00			RES.,FXD,CMPSN:39M OHM,5%,0.25W	01121	CB3965
R3236	315-0153-00			RES.,FXD,CMPSN:15K OHM,5%,0.25W	01121	CB1535
R3246	315-0472-00			RES.,FXD,CMPSN:4.7K OHM,5%,0.25W	01121	CB4725
R3254	315-0272-00			RES.,FXD,CMPSN:2.7K OHM,5%,0.25W	01121	CB2725
R3256	315-0272-00			RES.,FXD,CMPSN:2.7K OHM,5%,0.25W	01121	CB2725
R3258	315-0472-00			RES.,FXD,CMPSN:4.7K OHM,5%,0.25W	01121	CB4725
R3260	315-0113-00			RES.,FXD,CMPSN:11K OHM,5%,0.25W	01121	CB1135
R3262	321-0304-00			RES.,FXD,FILM:14.3K OHM,1%,0.125W	91637	MFF1816G14301F
R3268	315-0153-00			RES.,FXD,CMPSN:15K OHM,5%,0.25W	01121	CB1535
R3270	315-0472-00			RES.,FXD,CMPSN:4.7K OHM,5%,0.25W	01121	CB4725
R3274	315-0330-00	XB040000		RES.,FXD,CMPSN:33 OHM,5%,0.25W	01121	CB3305
R3282	311-1228-00			RES.,VAR,NONWIR:10K OHM,20%,0.50W	32997	3386F-T04-103
R3286	315-0272-00			RES.,FXD,CMPSN:2.7K OHM,5%,0.25W	01121	CB2725
R3288	315-0272-00			RES.,FXD,CMPSN:2.7K OHM,5%,0.25W	01121	CB2725
R3291	315-0102-00			RES.,FXD,CMPSN:1K OHM,5%,0.25W	01121	CB1025
R3292	315-0102-00			RES.,FXD,CMPSN:1K OHM,5%,0.25W	01121	CB1025
R3293	315-0102-00			RES.,FXD,CMPSN:1K OHM,5%,0.25W	01121	CB1025
R3296	315-0272-00			RES.,FXD,CMPSN:2.7K OHM,5%,0.25W	01121	CB2725
R3298	315-0272-00			RES.,FXD,CMPSN:2.7K OHM,5%,0.25W	01121	CB2725
R3302	315-0473-00			RES.,FXD,CMPSN:47K OHM,5%,0.25W	01121	CB4735
R3304	315-0104-00			RES.,FXD,CMPSN:100K OHM,5%,0.25W	01121	CB1045
R3316	315-0102-00			RES.,FXD,CMPSN:1K OHM,5%,0.25W	01121	CB1025
R3340	315-0202-00			RES.,FXD,CMPSN:2K OHM,5%,0.25W	01121	CB2025
R3342	315-0242-00			RES.,FXD,CMPSN:2.4K OHM,5%,0.25W	01121	CB2425
R3402	315-0224-00			RES.,FXD,CMPSN:220K OHM,5%,0.25W	01121	CB2245
R3408	315-0392-00			RES.,FXD,CMPSN:3.9K OHM,5%,0.25W	01121	CB3925
R3418	315-0472-00			RES.,FXD,CMPSN:4.7K OHM,5%,0.25W	01121	CB4725
R3426	315-0101-00			RES.,FXD,CMPSN:100 OHM,5%,0.25W	01121	CB1015
R3434	321-0372-00			RES.,FXD,FILM:73.2K OHM,1%,0.125W	91637	MFF1816G73201F
R3436	321-0270-00			RES.,FXD,FILM:6.34K OHM,1%,0.125W	91637	MFF1816G63400F
R3438	311-1228-00			RES.,VAR,NONWIR:10K OHM,20%,0.50W	32997	3386F-T04-103
R3450	321-0363-00			RES.,FXD,FILM:59K OHM,1%,0.125W	91637	MFF1816G59001F
R3460	315-0203-00			RES.,FXD,CMPSN:20K OHM,5%,0.25W	01121	CB2035
R3464	315-0332-00			RES.,FXD,CMPSN:3.3K OHM,5%,0.25W	01121	CB3325
R3478	315-0472-00			RES.,FXD,CMPSN:4.7K OHM,5%,0.25W	01121	CB4725
R3480	315-0203-00			RES.,FXD,CMPSN:20K OHM,5%,0.25W	01121	CB2035
R3482	315-0105-00			RES.,FXD,CMPSN:1M OHM,5%,0.25W	01121	CB1055
R3484	315-0103-00			RES.,FXD,CMPSN:10K OHM,5%,0.25W	01121	CB1035
R3490	315-0102-00			RES.,FXD,CMPSN:1K OHM,5%,0.25W	01121	CB1025
R3494	315-0301-00			RES.,FXD,CMPSN:300 OHM,5%,0.25W	01121	CB3015
R3496	315-0272-00			RES.,FXD,CMPSN:2.7K OHM,5%,0.25W	01121	CB2725
R3508	315-0391-00			RES.,FXD,CMPSN:390 OHM,5%,0.25W	01121	CB3915
R3514	315-0100-00			RES.,FXD,CMPSN:10 OHM,5%,0.25W	01121	CB1005
R3516	315-0241-00			RES.,FXD,CMPSN:240 OHM,5%,0.25W	01121	CB2415
R3518	321-0397-00			RES.,FXD,FILM:133K OHM,1%,0.125W	91637	MFF1816G13302F
R3520	315-0102-00			RES.,FXD,CMPSN:1K OHM,5%,0.25W	01121	CB1025
R3530	315-0472-00			RES.,FXD,CMPSN:4.7K OHM,5%,0.25W	01121	CB4725
R3534	311-1228-00			RES.,VAR,NONWIR:10K OHM,20%,0.50W	32997	3386F-T04-103
R3540	311-1228-00			RES.,VAR,NONWIR:10K OHM,20%,0.50W	32997	3386F-T04-103
R3564	315-0272-00			RES.,FXD,CMPSN:2.7K OHM,5%,0.25W	01121	CB2725
R3566	315-0272-00			RES.,FXD,CMPSN:2.7K OHM,5%,0.25W	01121	CB2725
R3572	315-0303-00			RES.,FXD,CMPSN:30K OHM,5%,0.25W	01121	CB3035

Ckt No.	Tektronix Part No.	Serial/Model No. Eff	Dscont	Name & Description	Mfr Code	Mfr Part Number
R3574	315-0203-00			RES.,FXD,CMPSN:20K OHM,5%,0.25W	01121	CB2035
R3592	315-0472-00			RES.,FXD,CMPSN:4.7K OHM,5%,0.25W	01121	CB4725
R3594	315-0472-00			RES.,FXD,CMPSN:4.7K OHM,5%,0.25W	01121	CB4725
R3596	315-0272-00			RES.,FXD,CMPSN:2.7K OHM,5%,0.25W	01121	CB2725
R3600	315-0470-00			RES.,FXD,CMPSN:47 OHM,5%,0.25W	01121	CB4705
R3602	315-0102-00			RES.,FXD,CMPSN:1K OHM,5%,0.25W	01121	CB1025
R3604	315-0153-00			RES.,FXD,CMPSN:15K OHM,5%,0.25W	01121	CB1535
R3612	315-0153-00			RES.,FXD,CMPSN:15K OHM,5%,0.25W	01121	CB1535
R3614	315-0301-00			RES.,FXD,CMPSN:300 OHM,5%,0.25W	01121	CB3015
R3620	315-0103-00			RES.,FXD,CMPSN:10K OHM,5%,0.25W	01121	CB1035
R3622	315-0302-00			RES.,FXD,CMPSN:3K OHM,5%,0.25W	01121	CB3025
R3624	311-1228-00			RES.,VAR,NONWIR:10K OHM,20%,0.50W	32997	3386F-T04-103
R3642	321-0336-00			RES.,FXD,FILM:30.9 OHM,1%,0.125W	91637	MFF1816G30901F
R3666	321-0381-00			RES.,FXD,FILM:90.9K OHM,1%,0.125W	91637	MFF1816G90901F
R3670	315-0105-00			RES.,FXD,CMPSN:1M OHM,5%,0.25W	01121	CB1055
R3672	315-0102-00			RES.,FXD,CMPSN:1K OHM,5%,0.25W	01121	CB1025
R3674	315-0103-00			RES.,FXD,CMPSN:10K OHM,5%,0.25W	01121	CB1035
R3690	315-0301-00			RES.,FXD,CMPSN:300 OHM,5%,0.25W	01121	CB3015
R3700	315-0103-00			RES.,FXD,CMPSN:10K OHM,5%,0.25W	01121	CB1035
R3702	315-0274-00			RES.,FXD,CMPSN:270K OHM,5%,0.25W	01121	CB2745
R3704	315-0393-00			RES.,FXD,CMPSN:39K OHM,5%,0.25W	01121	CB3935
R3706	315-0914-00			RES.,FXD,CMPSN:910K OHM,5%,0.25W	01121	CB9145
R3708	315-0473-00			RES.,FXD,CMPSN:47K OHM,5%,0.25W	01121	CB4735
R3710	315-0274-00			RES.,FXD,CMPSN:270K OHM,5%,0.25W	01121	CB2745
R3712	315-0102-00			RES.,FXD,CMPSN:1K OHM,5%,0.25W	01121	CB1025
R3738	315-0272-00			RES.,FXD,CMPSN:2.7K OHM,5%,0.25W	01121	CB2725
R3744	315-0624-00			RES.,FXD,CMPSN:620K OHM,5%,0.25W	01121	CB6245
R3746	315-0623-00			RES.,FXD,CMPSN:62K OHM,5%,0.25W	01121	CB6235
R3752	315-0333-00			RES.,FXD,CMPSN:33K OHM,5%,0.25W	01121	CB3335
R3754	315-0393-00			RES.,FXD,CMPSN:39K OHM,5%,0.25W	01121	CB3935
R3770	315-0153-00			RES.,FXD,CMPSN:15K OHM,5%,0.25W	01121	CB1535
R3776	321-0380-00			RES.,FXD,FILM:88.7K OHM,1%,0.125W	91637	MFF1816G88701F
R3800	315-0912-00			RES.,FXD,CMPSN:9.1K OHM,5%,0.25W	01121	CB9125
R3802	315-0182-00			RES.,FXD,CMPSN:1.8K OHM,5%,0.25W	01121	CB1825
R3810	315-0222-00			RES.,FXD,CMPSN:2.2K OHM,5%,0.25W	01121	CB2225
R3818	315-0361-00			RES.,FXD,CMPSN:360 OHM,5%,0.25W	01121	CB3615
R3820	315-0392-00			RES.,FXD,CMPSN:3.9K OHM,5%,0.25W	01121	CB3925
R3824	315-0152-00			RES.,FXD,CMPSN:1.5K OHM,5%,0.25W	01121	CB1525
R3826	315-0332-00			RES.,FXD,CMPSN:3.3K OHM,5%,0.25W	01121	CB3325
R3828	321-0270-00			RES.,FXD,FILM:6.34K OHM,1%,0.125W	91637	MFF1816G63400F
R3830	315-0154-00			RES.,FXD,CMPSN:150K OHM,5%,0.25W	01121	CB1545
R3842	315-0102-00			RES.,FXD,CMPSN:1K OHM,5%,0.25W	01121	CB1025
R3844	315-0472-00			RES.,FXD,CMPSN:4.7K OHM,5%,0.25W	01121	CB4725
R3848	315-0472-00			RES.,FXD,CMPSN:4.7K OHM,5%,0.25W	01121	CB4725
R3866	315-0153-00			RES.,FXD,CMPSN:15K OHM,5%,0.25W	01121	CB1535
R3870	321-0382-00			RES.,FXD,FILM:93.1K OHM,1%,0.125W	91637	MFF1816G93101F
R3872	SELECTED					
R3873	315-0272-00			RES.,FXD,CMPSN:2.7K OHM,5%,0.25W	01121	CB2725
R3882	315-0153-00			RES.,FXD,CMPSN:15K OHM,5%,0.25W	01121	CB1535
R3890	315-0152-00			RES.,FXD,CMPSN:1.5K OHM,5%,0.25W	01121	CB1525
R3891	315-0152-00			RES.,FXD,CMPSN:1.5K OHM,5%,0.25W	01121	CB1525
R3892	315-0471-00			RES.,FXD,CMPSN:470 OHM,5%,0.25W	01121	CB4715
R3894	315-0471-00			RES.,FXD,CMPSN:470 OHM,5%,0.25W	01121	CB4715
R3896	315-0152-00			RES.,FXD,CMPSN:1.5K OHM,5%,0.25W	01121	CB1525
R3897	315-0153-00			RES.,FXD,CMPSN:15K OHM,5%,0.25W	01121	CB1535
R3900	315-0472-00			RES.,FXD,CMPSN:4.7K OHM,5%,0.25W	01121	CB4725
R3901	315-0106-00			RES.,FXD,CMPSN:10M OHM,5%,0.25W	01121	CB1065

Ckt No.	Tektronix Part No.	Serial/Model No. Eff	Dscont	Name & Description	Mfr Code	Mfr Part Number
R3902	315-0472-00			RES.,FXD,CMPSN:4.7K OHM,5%,0.25W	01121	CB4725
R3903	315-0103-00			RES.,FXD,CMPSN:10K OHM,5%,0.25W	01121	CB1035
R3904	315-0561-00			RES.,FXD,CMPSN:560 OHM,5%,0.25W	01121	CB5615
R3906	315-0472-00			RES.,FXD,CMPSN:4.7K OHM,5%,0.25W	01121	CB4725
R3920	315-0102-00			RES.,FXD,CMPSN:1K OHM,5%,0.25W	01121	CB1025
R3922	315-0185-00			RES.,FXD,CMPSN:1.8M OHM,5%,0.25W	01121	CB1855
R3924	321-0304-00			RES.,FXD,FILM:14.3K OHM,1%,0.125W	91637	MFF1816G14301F
R3932	315-0332-00			RES.,FXD,CMPSN:3.3K OHM,5%,0.25W	01121	CB3325
R3934	315-0153-00			RES.,FXD,CMPSN:15K OHM,5%,0.25W	01121	CB1535
R3936	315-0275-00			RES.,FXD,CMPSN:2.7M OHM,5%,0.25W	01121	CB2755
R3938	315-0472-00			RES.,FXD,CMPSN:4.7K OHM,5%,0.25W	01121	CB4725
R3974	315-0272-00			RES.,FXD,CMPSN:2.7K OHM,5%,0.25W	01121	CB2725
R3985	315-0301-00			RES.,FXD,CMPSN:300 OHM,5%,0.25W	01121	CB3015
R3987	315-0132-00			RES.,FXD,CMPSN:1.3K OHM,5%,0.25W	01121	CB1325
R3990	315-0103-00			RES.,FXD,CMPSN:10K OHM,5%,0.25W	01121	CB1035
R3996	315-0103-00			RES.,FXD,CMPSN:10K OHM,5%,0.25W	01121	CB1035
R4010	315-0123-00			RES.,FXD,CMPSN:12K OHM,5%,0.25W	01121	CB1235
R4015	315-0332-00			RES.,FXD,CMPSN:3.3K OHM,5%,0.25W	01121	CB3325
R4020	315-0391-00			RES.,FXD,CMPSN:390 OHM,5%,0.25W	01121	CB3915
R4030	315-0470-00			RES.,FXD,CMPSN:47 OHM,5%,0.25W	01121	CB4705
R4042	315-0102-00			RES.,FXD,CMPSN:1K OHM,5%,0.25W	01121	CB1025
R4052	315-0474-00			RES.,FXD,CMPSN:470K OHM,5%,0.25W	01121	CB4745
R4060	315-0113-00			RES.,FXD,CMPSN:11K OHM,5%,0.25W	01121	CB1135
R4070	315-0274-00			RES.,FXD,CMPSN:270K OHM,5%,0.25W	01121	CB2745
R4080	315-0473-00			RES.,FXD,CMPSN:47K OHM,5%,0.25W	01121	CB4735
R4086	315-0182-00			RES.,FXD,CMPSN:1.8K OHM,5%,0.25W	01121	CB1825
R4104	321-0164-00			RES.,FXD,FILM:499 OHM,1%,0.125W	91637	MFF1816G499R0F
R4126	315-0103-00			RES.,FXD,CMPSN:10K OHM,5%,0.25W	01121	CB1035
R4140	315-0104-00			RES.,FXD,CMPSN:100K OHM,5%,0.25W	01121	CB1045
R4152	315-0912-00			RES.,FXD,CMPSN:9.1K OHM,5%,0.25W	01121	CB9125
R4162	315-0202-00			RES.,FXD,CMPSN:2K OHM,5%,0.25W	01121	CB2025
R4164	315-0271-00			RES.,FXD,CMPSN:270 OHM,5%,0.25W	01121	CB2715
R4168	315-0393-00			RES.,FXD,CMPSN:39K OHM,5%,0.25W	01121	CB3935
R4182	315-0274-00			RES.,FXD,CMPSN:270K OHM,5%,0.25W	01121	CB2745
R4184	315-0153-00			RES.,FXD,CMPSN:15K OHM,5%,0.25W	01121	CB1535
R4188	315-0102-00			RES.,FXD,CMPSN:1K OHM,5%,0.25W	01121	CB1025
R4194	315-0680-00			RES.,FXD,CMPSN:68 OHM,5%,0.25W	01121	CB6805
R4196	315-0472-00			RES.,FXD,CMPSN:4.7K OHM,5%,0.25W	01121	CB4725
R4198	315-0333-00			RES.,FXD,CMPSN:33K OHM,5%,0.25W	01121	CB3335
R4199	315-0472-00			RES.,FXD,CMPSN:4.7K OHM,5%,0.25W	01121	CB4725
R4202	321-0164-00			RES.,FXD,FILM:499 OHM,1%,0.125W	91637	MFF1816G499R0F
R4204	321-0164-00			RES.,FXD,FILM:499 OHM,1%,0.125W	91637	MFF1816G499R0F
R4214	315-0103-00			RES.,FXD,CMPSN:10K OHM,5%,0.25W	01121	CB1035
R4222	315-0512-00			RES.,FXD,CMPSN:5.1K OHM,5%,0.25W	01121	CB5125
R4230	315-0104-00			RES.,FXD,CMPSN:100K OHM,5%,0.25W	01121	CB1045
R4232	315-0104-00			RES.,FXD,CMPSN:100K OHM,5%,0.25W	01121	CB1045
R4234	315-0472-00			RES.,FXD,CMPSN:4.7K OHM,5%,0.25W	01121	CB4725
R4236	315-0153-00			RES.,FXD,CMPSN:15K OHM,5%,0.25W	01121	CB1535
R4238	321-0356-00			RES.,FXD,FILM:49.9K OHM,1%,0.125W	91637	MFF1816G49901F
R4240	315-0101-00			RES.,FXD,CMPSN:100 OHM,5%,0.25W	01121	CB1015
R4246	315-0914-00			RES.,FXD,CMPSN:910K OHM,5%,0.25W	01121	CB9145
R4248	315-0472-00			RES.,FXD,CMPSN:4.7K OHM,5%,0.25W	01121	CB4725
R4252	315-0332-00			RES.,FXD,CMPSN:3.3K OHM,5%,0.25W	01121	CB3325
R4254	315-0152-00			RES.,FXD,CMPSN:1.5K OHM,5%,0.25W	01121	CB1525
R4258	315-0561-00			RES.,FXD,CMPSN:560 OHM,5%,0.25W	01121	CB5615
R4262	315-0361-00			RES.,FXD,CMPSN:360 OHM,5%,0.25W	01121	CB3615
R4268	315-0272-00			RES.,FXD,CMPSN:2.7K OHM,5%,0.25W	01121	CB2725

Ckt No.	Tektronix Part No.	Serial/Model No. Eff	Dscont	Name & Description	Mfr Code	Mfr Part Number
R4274	315-0472-00			RES.,FXD,CMPSN:4.7K OHM,5%,0.25W	01121	CB4725
R4280	315-0272-00			RES.,FXD,CMPSN:2.7K OHM,5%,0.25W	01121	CB2725
R4283	315-0102-00			RES.,FXD,CMPSN:1K OHM,5%,0.25W	01121	CB1025
R4284	315-0100-00			RES.,FXD,CMPSN:10 OHM,5%,0.25W	01121	CB1005
R4286	315-0153-00			RES.,FXD,CMPSN:15K OHM,5%,0.25W	01121	CB1535
R4292	315-0101-00			RES.,FXD,CMPSN:100 OHM,5%,0.25W	01121	CB1015
R4296	315-0102-00			RES.,FXD,CMPSN:1K OHM,5%,0.25W	01121	CB1025
R4298	321-0143-00			RES.,FXD,FILM:301 OHM,1%,0.125W	91637	MFF1816G301R0F
R4302	321-0164-00			RES.,FXD,FILM:499 OHM,1%,0.125W	91637	MFF1816G499R0F
R4304	321-0164-00			RES.,FXD,FILM:499 OHM,1%,0.125W	91637	MFF1816G499R0F
R4310	315-0332-00			RES.,FXD,CMPSN:3.3K OHM,5%,0.25W	01121	CB3325
R4312	315-0512-00			RES.,FXD,CMPSN:5.1K OHM,5%,0.25W	01121	CB5125
R4316	315-0512-00			RES.,FXD,CMPSN:5.1K OHM,5%,0.25W	01121	CB5125
R4324	315-0103-00			RES.,FXD,CMPSN:10K OHM,5%,0.25W	01121	CB1035
R4328	315-0104-00			RES.,FXD,CMPSN:100K OHM,5%,0.25W	01121	CB1045
R4330	315-0101-00			RES.,FXD,CMPSN:100 OHM,5%,0.25W	01121	CB1015
R4332	315-0682-00			RES.,FXD,CMPSN:6.8K OHM,5%,0.25W	01121	CB6825
R4334	315-0752-00			RES.,FXD,CMPSN:7.5K OHM,5%,0.25W	01121	CB7525
R4336	315-0102-00			RES.,FXD,CMPSN:1K OHM,5%,0.25W	01121	CB1025
R4350	315-0393-00			RES.,FXD,CMPSN:39K OHM,5%,0.25W	01121	CB3935
R4351	315-0624-00	XB061044		RES.,FXD,CMPSN:620K OHM,5%,0.25W	01121	CB6245
R4352	315-0123-00			RES.,FXD,CMPSN:12K OHM,5%,0.25W	01121	CB1235
R4362	315-0301-00			RES.,FXD,CMPSN:300 OHM,5%,0.25W	01121	CB3015
R4370	315-0241-00			RES.,FXD,CMPSN:240 OHM,5%,0.25W	01121	CB2415
R4374	315-0153-00			RES.,FXD,CMPSN:15K OHM,5%,0.25W	01121	CB1535
R4386	321-0164-00			RES.,FXD,FILM:499 OHM,1%,0.125W	91637	MFF1816G499R0F
R4388	321-0159-00			RES.,FXD,FILM:442 OHM,1%,0.125W	91637	MFF1816G442R0F
R4390	315-0153-00			RES.,FXD,CMPSN:15K OHM,5%,0.25W	01121	CB1535
R4392	321-0085-03	B010100	B029999	RES.,FXD,FILM:75 OHM,0.25%,0.125W	24546	NC55C75R0C
R4392	323-0085-00	B030000		RES.,FXD,FILM:75 OHM,1%,0.50W	91637	MFF1226G75R00F
R4393	SELECTED					
R4402	321-0164-00			RES.,FXD,FILM:499 OHM,1%,0.125W	91637	MFF1816G499R0F
R4408	315-0475-00			RES.,FXD,CMPSN:4.7M OHM,5%,0.25W	01121	CB4755
R4410	315-0104-00			RES.,FXD,CMPSN:100K OHM,5%,0.25W	01121	CB1045
R4412	315-0105-00			RES.,FXD,CMPSN:1M OHM,5%,0.25W	01121	CB1055
R4414	315-0752-00			RES.,FXD,CMPSN:7.5K OHM,5%,0.25W	01121	CB7525
R4421	315-0471-00			RES.,FXD,CMPSN:470 OHM,5%,0.25W	01121	CB4715
R4428	315-0102-00			RES.,FXD,CMPSN:1K OHM,5%,0.25W	01121	CB1025
R4430	315-0102-00			RES.,FXD,CMPSN:1K OHM,5%,0.25W	01121	CB1025
R4432	315-0393-00			RES.,FXD,CMPSN:39K OHM,5%,0.25W	01121	CB3935
R4438	315-0104-00			RES.,FXD,CMPSN:100K OHM,5%,0.25W	01121	CB1045
R4444	321-0251-00			RES.,FXD,FILM:4.02K OHM,1%,0.125W	91637	MFF1816G40200F
R4446	321-0289-00			RES.,FXD,FILM:10K OHM,1%,0.125W	91637	MFF1816G10001F
R4450	321-0164-00			RES.,FXD,FILM:499 OHM,1%,0.125W	91637	MFF1816G499R0F
R4452	315-0822-00			RES.,FXD,CMPSN:8.2K OHM,5%,0.25W	01121	CB8225
R4466	321-0193-00			RES.,FXD,FILM:1K OHM,1%,0.125W	91637	MFF1816G10000F
R4468	315-0101-00			RES.,FXD,CMPSN:100 OHM,5%,0.25W	01121	CB1015
R4470	315-0101-00			RES.,FXD,CMPSN:100 OHM,5%,0.25W	01121	CB1015
R4474	315-0102-00			RES.,FXD,CMPSN:1K OHM,5%,0.25W	01121	CB1025
R4476	315-0432-00			RES.,FXD,CMPSN:4.3K OHM,5%,0.25W	01121	CB4325
R4478	315-0470-00			RES.,FXD,CMPSN:47 OHM,5%,0.25W	01121	CB4705
R4480	315-0471-00			RES.,FXD,CMPSN:470 OHM,5%,0.25W	01121	CB4715
R4482	315-0153-00			RES.,FXD,CMPSN:15K OHM,5%,0.25W	01121	CB1535
R4484	315-0103-00			RES.,FXD,CMPSN:10K OHM,5%,0.25W	01121	CB1035
R4486	315-0100-00			RES.,FXD,CMPSN:10 OHM,5%,0.25W	01121	CB1005
R4492	321-0215-00			RES.,FXD,FILM:1.69K OHM,1%,0.125W	91637	MFF1816G16900F
R4494	315-0182-00			RES.,FXD,CMPSN:1.8K OHM,5%,0.25W	01121	CB1825

Ckt No.	Tektronix Part No.	Serial/Model No. Eff	Dscont	Name & Description	Mfr Code	Mfr Part Number
R4496	315-0201-00			RES.,FXD,CMPSN:200 OHM,5%,0.25W	01121	CB2015
R4502	321-0164-00			RES.,FXD,FILM:499 OHM,1%,0.125W	91637	MFF1816G499R0F
R4506	321-0164-00			RES.,FXD,FILM:499 OHM,1%,0.125W	91637	MFF1816G499R0F
R4508	315-0512-00			RES.,FXD,CMPSN:5.1K OHM,5%,0.25W	01121	CB5125
R4516	315-0102-00			RES.,FXD,CMPSN:1K OHM,5%,0.25W	01121	CB1025
R4520	315-0624-00			RES.,FXD,CMPSN:620K OHM,5%,0.25W	01121	CB6245
R4526	315-0102-00			RES.,FXD,CMPSN:1K OHM,5%,0.25W	01121	CB1025
R4528	315-0203-00			RES.,FXD,CMPSN:20K OHM,5%,0.25W	01121	CB2035
R4534	315-0472-00			RES.,FXD,CMPSN:4.7K OHM,5%,0.25W	01121	CB4725
R4536	315-0475-00			RES.,FXD,CMPSN:4.7M OHM,5%,0.25W	01121	CB4755
R4538	321-0289-00			RES.,FXD,FILM:10K OHM,1%,0.125W	91637	MFF1816G10001F
R4540	315-0332-00			RES.,FXD,CMPSN:3.3K OHM,5%,0.25W	01121	CB3325
R4542	321-0169-00			RES.,FXD,FILM:562 OHM,1%,0.125W	91637	MFF1816G562R0F
R4544	321-0251-00			RES.,FXD,FILM:4.02K OHM,1%,0.125W	91637	MFF1816G40200F
R4548	315-0101-00			RES.,FXD,CMPSN:100 OHM,5%,0.25W	01121	CB1015
R4550	315-0471-00			RES.,FXD,CMPSN:470 OHM,5%,0.25W	01121	CB4715
R4554	315-0101-00			RES.,FXD,CMPSN:100 OHM,5%,0.25W	01121	CB1015
R4574	315-0392-00			RES.,FXD,CMPSN:3.9K OHM,5%,0.25W	01121	CB3925
R4584	315-0101-00			RES.,FXD,CMPSN:100 OHM,5%,0.25W	01121	CB1015
R4590	315-0153-00			RES.,FXD,CMPSN:15K OHM,5%,0.25W	01121	CB1535
R4593	----- -----			(SELECTED,ADDED IF NECESSARY)		
R4594	315-0102-00			RES.,FXD,CMPSN:1K OHM,5%,0.25W	01121	CB1025
R4600	321-0164-00			RES.,FXD,FILM:499 OHM,1%,0.125W	91637	MFF1816G499R0F
R4602	321-0164-00			RES.,FXD,FILM:499 OHM,1%,0.125W	91637	MFF1816G499R0F
R4606	315-0512-00			RES.,FXD,CMPSN:5.1K OHM,5%,0.25W	01121	CB5125
R4610	321-0164-00			RES.,FXD,FILM:499 OHM,1%,0.125W	91637	MFF1816G499R0F
R4618	315-0104-00			RES.,FXD,CMPSN:100K OHM,5%,0.25W	01121	CB1045
R4620	315-0274-00			RES.,FXD,CMPSN:270K OHM,5%,0.25W	01121	CB2745
R4622	315-0752-00			RES.,FXD,CMPSN:7.5K OHM,5%,0.25W	01121	CB7525
R4626	315-0275-00			RES.,FXD,CMPSN:2.7M OHM,5%,0.25W	01121	CB2755
R4628	315-0473-00			RES.,FXD,CMPSN:47K OHM,5%,0.25W	01121	CB4735
R4630	315-0101-00			RES.,FXD,CMPSN:100 OHM,5%,0.25W	01121	CB1015
R4632	315-0104-00			RES.,FXD,CMPSN:100K OHM,5%,0.25W	01121	CB1045
R4634	315-0104-00			RES.,FXD,CMPSN:100K OHM,5%,0.25W	01121	CB1045
R4640	315-0102-00			RES.,FXD,CMPSN:1K OHM,5%,0.25W	01121	CB1025
R4642	315-0103-00			RES.,FXD,CMPSN:10K OHM,5%,0.25W	01121	CB1035
R4646	315-0822-00			RES.,FXD,CMPSN:8.2K OHM,5%,0.25W	01121	CB8225
R4648	315-0561-00			RES.,FXD,CMPSN:560 OHM,5%,0.25W	01121	CB5615
R4660	315-0102-00			RES.,FXD,CMPSN:1K OHM,5%,0.25W	01121	CB1025
R4662	315-0432-00			RES.,FXD,CMPSN:4.3K OHM,5%,0.25W	01121	CB4325
R4664	315-0470-00			RES.,FXD,CMPSN:47 OHM,5%,0.25W	01121	CB4705
R4670	315-0910-00			RES.,FXD,CMPSN:91 OHM,5%,0.25W	01121	CB9105
R4700	321-0164-00			RES.,FXD,FILM:499 OHM,1%,0.125W	91637	MFF1816G499R0F
R4704	315-0103-00			RES.,FXD,CMPSN:10K OHM,5%,0.25W	01121	CB1035
R4708	315-0105-00			RES.,FXD,CMPSN:1M OHM,5%,0.25W	01121	CB1055
R4714	315-0101-00			RES.,FXD,CMPSN:100 OHM,5%,0.25W	01121	CB1015
R4720	315-0393-00			RES.,FXD,CMPSN:39K OHM,5%,0.25W	01121	CB3935
R4724	315-0104-00			RES.,FXD,CMPSN:100K OHM,5%,0.25W	01121	CB1045
R4740	315-0332-00			RES.,FXD,CMPSN:3.3K OHM,5%,0.25W	01121	CB3325
R4742	315-0332-00			RES.,FXD,CMPSN:3.3K OHM,5%,0.25W	01121	CB3325
R4744	321-0289-00			RES.,FXD,FILM:10K OHM,1%,0.125W	91637	MFF1816G10001F
R4746	321-0169-00			RES.,FXD,FILM:562 OHM,1%,0.125W	91637	MFF1816G562R0F
R4748	315-0392-00			RES.,FXD,CMPSN:3.9K OHM,5%,0.25W	01121	CB3925
R4750	321-0251-00			RES.,FXD,FILM:4.02K OHM,1%,0.125W	91637	MFF1816G40200F
R4752	315-0822-00			RES.,FXD,CMPSN:8.2K OHM,5%,0.25W	01121	CB8225
R4760	315-0471-00			RES.,FXD,CMPSN:470 OHM,5%,0.25W	01121	CB4715
R4762	315-0471-00			RES.,FXD,CMPSN:470 OHM,5%,0.25W	01121	CB4715

Ckt No.	Tektronix Part No.	Serial/Model No. Eff	Dscont	Name & Description	Mfr Code	Mfr Part Number
R4764	315-0101-00			RES.,FXD,CMPSN:100 OHM,5%,0.25W	01121	CB1015
R4766	315-0101-00			RES.,FXD,CMPSN:100 OHM,5%,0.25W	01121	CB1015
R4782	315-0753-00			RES.,FXD,CMPSN:75K OHM,5%,0.25W	01121	CB7535
R4786	315-0753-00			RES.,FXD,CMPSN:75K OHM,5%,0.25W	01121	CB7535
R4820	315-0102-00			RES.,FXD,CMPSN:1K OHM,5%,0.25W	01121	CB1025
R4824	315-0332-00			RES.,FXD,CMPSN:3.3K OHM,5%,0.25W	01121	CB3325
R4834	315-0273-00			RES.,FXD,CMPSN:27K OHM,5%,0.25W	01121	CB2735
R4836	315-0102-00			RES.,FXD,CMPSN:1K OHM,5%,0.25W	01121	CB1025
R4838	315-0101-00			RES.,FXD,CMPSN:100 OHM,5%,0.25W	01121	CB1015
R4842	315-0101-00			RES.,FXD,CMPSN:100 OHM,5%,0.25W	01121	CB1015
R4862	315-0432-00			RES.,FXD,CMPSN:4.3K OHM,5%,0.25W	01121	CB4325
R4864	315-0470-00			RES.,FXD,CMPSN:47 OHM,5%,0.25W	01121	CB4705
R4882	315-0103-00			RES.,FXD,CMPSN:10K OHM,5%,0.25W	01121	CB1035
R4886	315-0750-00			RES.,FXD,CMPSN:75 OHM,5%,0.25W	01121	CB7505
R4888	315-0124-00			RES.,FXD,CMPSN:120K OHM,5%,0.25W	01121	CB1245
R4891	315-0124-00			RES.,FXD,CMPSN:120K OHM,5%,0.25W	01121	CB1245
R4896	315-0202-00			RES.,FXD,CMPSN:2K OHM,5%,0.25W	01121	CB2025
R4930	315-0333-00			RES.,FXD,CMPSN:33K OHM,5%,0.25W	01121	CB3335
R4970	321-0193-00			RES.,FXD,FILM:1K OHM,1%,0.125W	91637	MFF1816G10000F
R4974	315-0471-00			RES.,FXD,CMPSN:470 OHM,5%,0.25W	01121	CB4715
R4978	315-0682-00			RES.,FXD,CMPSN:6.8K OHM,5%,0.25W	01121	CB6825
R4980	315-0822-00			RES.,FXD,CMPSN:8.2K OHM,5%,0.25W	01121	CB8225
R4990	315-0101-00			RES.,FXD,CMPSN:100 OHM,5%,0.25W	01121	CB1015
R5052	321-0277-00			RES.,FXD,FILM:7.5K OHM,1%,0.125W	91637	MFF1816G75000F
R5100	321-0414-00			RES.,FXD,FILM:200K OHM,1%,0.125W	91637	MFF1816G20002F
R5102	321-0289-00			RES.,FXD,FILM:10K OHM,1%,0.125W	91637	MFF1816G10001F
R5104	321-0414-00			RES.,FXD,FILM:200K OHM,1%,0.125W	91637	MFF1816G20002F
R5106	321-0281-00			RES.,FXD,FILM:8.25K OHM,1%,0.125W	91637	MFF1816G82500F
R5108	311-1232-00			RES.,VAR,NONWIR:50K OHM,20%,0.50W	32997	3386F-T04-503
R5110	315-0103-00			RES.,FXD,CMPSN:10K OHM,5%,0.25W	01121	CB1035
R5112	315-0104-00			RES.,FXD,CMPSN:100K OHM,5%,0.25W	01121	CB1045
R5118	315-0105-00			RES.,FXD,CMPSN:1M OHM,5%,0.25W	01121	CB1055
R5120	315-0104-00			RES.,FXD,CMPSN:100K OHM,5%,0.25W	01121	CB1045
R5142	315-0474-00			RES.,FXD,CMPSN:470K OHM,5%,0.25W	01121	CB4745
R5144	315-0223-00			RES.,FXD,CMPSN:22K OHM,5%,0.25W	01121	CB2235
R5150	311-1232-00			RES.,VAR,NONWIR:50K OHM,20%,0.50W	32997	3386F-T04-503
R5156	321-0293-00			RES.,FXD,FILM:11K OHM,1%,0.125W	91637	MFF1816G11001F
R5158	321-0373-00			RES.,FXD,FILM:75K OHM, 1%,0.125W	91637	MFF1816G75001F
R5160	321-0293-00			RES.,FXD,FILM:11K OHM,1%,0.125W	91637	MFF1816G11001F
R5162	315-0512-00			RES.,FXD,CMPSN:5.1K OHM,5%,0.25W	01121	CB5125
R5164	321-0289-00			RES.,FXD,FILM:10K OHM,1%,0.125W	91637	MFF1816G10001F
R5170	321-0318-00			RES.,FXD,FILM:20K OHM,1%,0.125W	91637	MFF1816G20001F
R5172	311-1232-00			RES.,VAR,NONWIR:50K OHM,20%,0.50W	32997	3386F-T04-503
R5174	311-1232-00			RES.,VAR,NONWIR:50K OHM,20%,0.50W	32997	3386F-T04-503
R5176	315-0470-00			RES.,FXD,CMPSN:47 OHM,5%,0.25W	01121	CB4705
R5178	321-0289-00			RES.,FXD,FILM:10K OHM,1%,0.125W	91637	MFF1816G10001F
R5180	321-0289-00			RES.,FXD,FILM:10K OHM,1%,0.125W	91637	MFF1816G10001F
R5182	321-0289-00			RES.,FXD,FILM:10K OHM,1%,0.125W	91637	MFF1816G10001F
R5186	311-1230-00			RES.,VAR,NONWIR:20K OHM,20%,0.50W	32997	3386F-T04-203
R5188	311-1230-00			RES.,VAR,NONWIR:20K OHM,20%,0.50W	32997	3386F-T04-203
R5190	321-0260-00			RES.,FXD,FILM:4.99K OHM,1%,0.125W	91637	MFF1816G49900F
R5192	321-0260-00			RES.,FXD,FILM:4.99K OHM,1%,0.125W	91637	MFF1816G49900F
R5193	315-0104-00			RES.,FXD,CMPSN:100K OHM,5%,0.25W	01121	CB1045
R5200	321-0414-00			RES.,FXD,FILM:200K OHM,1%,0.125W	91637	MFF1816G20002F
R5202	321-0289-00			RES.,FXD,FILM:10K OHM,1%,0.125W	91637	MFF1816G10001F
R5204	321-0414-00			RES.,FXD,FILM:200K OHM,1%,0.125W	91637	MFF1816G20002F
R5206	321-0289-00			RES.,FXD,FILM:10K OHM,1%,0.125W	91637	MFF1816G10001F

Ckt No.	Tektronix Part No.	Serial/Model No. Eff	Dscont	Name & Description	Mfr Code	Mfr Part Number
R5208	311-1232-00			RES.,VAR,NONWIR:50K OHM,20%,0.50W	32997	3386F-T04-503
R5210	315-0103-00			RES.,FXD,CMPSN:10K OHM,5%,0.25W	01121	CB1035
R5212	315-0104-00			RES.,FXD,CMPSN:100K OHM,5%,0.25W	01121	CB1045
R5218	315-0105-00			RES.,FXD,CMPSN:1M OHM,5%,0.25W	01121	CB1055
R5220	315-0104-00			RES.,FXD,CMPSN:100K OHM,5%,0.25W	01121	CB1045
R5242	315-0474-00			RES.,FXD,CMPSN:470K OHM,5%,0.25W	01121	CB4745
R5244	315-0223-00			RES.,FXD,CMPSN:22K OHM,5%,0.25W	01121	CB2235
R5250	311-1232-00			RES.,VAR,NONWIR:50K OHM,20%,0.50W	32997	3386F-T04-503
R5252	321-0373-00			RES.,FXD,FILM:75K OHM, 1%,0.125W	91637	MFF1816G75001F
R5254	321-0277-00			RES.,FXD,FILM:7.5K OHM,1%,0.125W	91637	MFF1816G75000F
R5256	321-0289-00			RES.,FXD,FILM:10K OHM,1%,0.125W	91637	MFF1816G10001F
R5258	315-0512-00			RES.,FXD,CMPSN:5.1K OHM,5%,0.25W	01121	CB5125
R5260	321-0318-00			RES.,FXD,FILM:20K OHM,1%,0.125W	91637	MFF1816G20001F
R5270	321-0289-00			RES.,FXD,FILM:10K OHM,1%,0.125W	91637	MFF1816G10001F
R5272	321-0289-00			RES.,FXD,FILM:10K OHM,1%,0.125W	91637	MFF1816G10001F
R5274	315-0470-00			RES.,FXD,CMPSN:47 OHM,5%,0.25W	01121	CB4705
R5280	321-0289-00			RES.,FXD,FILM:10K OHM,1%,0.125W	91637	MFF1816G10001F
R5292	321-0260-00			RES.,FXD,FILM:4.99K OHM,1%,0.125W	91637	MFF1816G49900F
R5294	315-0104-00			RES.,FXD,CMPSN:100K OHM,5%,0.25W	01121	CB1045
R5300	321-0447-00			RES.,FXD,FILM:442K OHM,1%,0.125W	24546	NA55D4423F
R5302	321-0289-00			RES.,FXD,FILM:10K OHM,1%,0.125W	91637	MFF1816G10001F
R5304	321-0414-00			RES.,FXD,FILM:200K OHM,1%,0.125W	91637	MFF1816G20002F
R5305	321-0292-00			RES.,FXD,FILM:10.7K OHM,1%,0.125W	91637	MFF1816G10701F
R5306	321-0447-00			RES.,FXD,FILM:442K OHM,1%,0.125W	24546	NA55D4423F
R5307	321-0414-00	B010100	B039999	RES.,FXD,FILM:200K OHM,1%,0.125W	91637	MFF1816G20002F
R5307	321-0377-00	B040000		RES.,FXD,FILM:82.5K OHM,1%,0.125W	91637	MFF1816G82501F
R5308	311-1232-00			RES.,VAR,NONWIR:50K OHM,20%,0.50W	32997	3386F-T04-503
R5310	315-0103-00			RES.,FXD,CMPSN:10K OHM,5%,0.25W	01121	CB1035
R5312	315-0104-00			RES.,FXD,CMPSN:100K OHM,5%,0.25W	01121	CB1045
R5318	315-0105-00			RES.,FXD,CMPSN:1M OHM,5%,0.25W	01121	CB1055
R5320	315-0104-00			RES.,FXD,CMPSN:100K OHM,5%,0.25W	01121	CB1045
R5342	315-0474-00			RES.,FXD,CMPSN:470K OHM,5%,0.25W	01121	CB4745
R5344	315-0223-00			RES.,FXD,CMPSN:22K OHM,5%,0.25W	01121	CB2235
R5350	321-0260-00			RES.,FXD,FILM:4.99K OHM,1%,0.125W	91637	MFF1816G49900F
R5354	321-0289-00			RES.,FXD,FILM:10K OHM,1%,0.125W	91637	MFF1816G10001F
R5358	321-0293-00			RES.,FXD,FILM:11K OHM,1%,0.125W	91637	MFF1816G11001F
R5359	321-0319-00			RES.,FXD,FILM:20.5K OHM,1%,0.125W	91637	MFF1816G20501F
R5360	315-0512-00			RES.,FXD,CMPSN:5.1K OHM,5%,0.25W	01121	CB5125
R5362	321-0289-00			RES.,FXD,FILM:10K OHM,1%,0.125W	91637	MFF1816G10001F
R5372	321-0318-00			RES.,FXD,FILM:20K OHM,1%,0.125W	91637	MFF1816G20001F
R5374	315-0470-00			RES.,FXD,CMPSN:47 OHM,5%,0.25W	01121	CB4705
R5376	321-0289-00			RES.,FXD,FILM:10K OHM,1%,0.125W	91637	MFF1816G10001F
R5378	321-0289-00			RES.,FXD,FILM:10K OHM,1%,0.125W	91637	MFF1816G10001F
R5380	321-0289-00			RES.,FXD,FILM:10K OHM,1%,0.125W	91637	MFF1816G10001F
R5390	321-0260-00			RES.,FXD,FILM:4.99K OHM,1%,0.125W	91637	MFF1816G49900F
R5391	321-0260-00			RES.,FXD,FILM:4.99K OHM,1%,0.125W	91637	MFF1816G49900F
R5394	315-0104-00			RES.,FXD,CMPSN:100K OHM,5%,0.25W	01121	CB1045
R5400	321-0414-00			RES.,FXD,FILM:200K OHM,1%,0.125W	91637	MFF1816G20002F
R5402	321-0359-00			RES.,FXD,FILM:53.6K OHM,1%,0.125W	91637	MFF1816G53601F
R5404	311-1232-00			RES.,VAR,NONWIR:50K OHM,20%,0.50W	32997	3386F-T04-503
R5406	311-1232-00			RES.,VAR,NONWIR:50K OHM,20%,0.50W	32997	3386F-T04-503
R5450	311-1232-00			RES.,VAR,NONWIR:50K OHM,20%,0.50W	32997	3386F-T04-503
R5454	321-0373-00			RES.,FXD,FILM:75K OHM, 1%,0.125W	91637	MFF1816G75001F
R5456	321-0293-00			RES.,FXD,FILM:11K OHM,1%,0.125W	91637	MFF1816G11001F
R5464	311-1232-00			RES.,VAR,NONWIR:50K OHM,20%,0.50W	32997	3386F-T04-503
R5470	311-1232-00			RES.,VAR,NONWIR:50K OHM,20%,0.50W	32997	3386F-T04-503
R5482	311-1230-00			RES.,VAR,NONWIR:20K OHM,20%,0.50W	32997	3386F-T04-203

Ckt No.	Tektronix Part No.	Serial/Model No. Eff	Dscont	Name & Description	Mfr Code	Mfr Part Number
R5490	311-1230-00			RES.,VAR,NONWIR:20K OHM,20%,0.50W	32997	3386F-T04-203
R5600	321-0414-00			RES.,FXD,FILM:200K OHM,1%,0.125W	91637	MFF1816G20002F
R5602	321-0414-00			RES.,FXD,FILM:200K OHM,1%,0.125W	91637	MFF1816G20002F
R5604	321-0289-00			RES.,FXD,FILM:10K OHM,1%,0.125W	91637	MFF1816G10001F
R5606	321-0289-00			RES.,FXD,FILM:10K OHM,1%,0.125W	91637	MFF1816G10001F
R5608	315-0512-00			RES.,FXD,CMPSN:5.1K OHM,5%,0.25W	01121	CB5125
R5610	321-0368-00			RES.,FXD,FILM:66.5K OHM,1%,0.125W	91637	MFF1816G66501F
R5614	315-0104-00			RES.,FXD,CMPSN:100K OHM,5%,0.25W	01121	CB1045
R5616	321-0289-00			RES.,FXD,FILM:10K OHM,1%,0.125W	91637	MFF1816G10001F
R5620	315-0104-00			RES.,FXD,CMPSN:100K OHM,5%,0.25W	01121	CB1045
R5622	315-0103-00			RES.,FXD,CMPSN:10K OHM,5%,0.25W	01121	CB1035
R5624	315-0105-00			RES.,FXD,CMPSN:1M OHM,5%,0.25W	01121	CB1055
R5642	315-0474-00			RES.,FXD,CMPSN:470K OHM,5%,0.25W	01121	CB4745
R5644	315-0223-00			RES.,FXD,CMPSN:22K OHM,5%,0.25W	01121	CB2235
R5650	311-1232-00			RES.,VAR,NONWIR:50K OHM,20%,0.50W	32997	3386F-T04-503
R5652	321-0373-00			RES.,FXD,FILM:75K OHM, 1%,0.125W	91637	MFF1816G75001F
R5654	321-0277-00			RES.,FXD,FILM:7.5K OHM,1%,0.125W	91637	MFF1816G75000F
R5656	321-0289-00			RES.,FXD,FILM:10K OHM,1%,0.125W	91637	MFF1816G10001F
R5658	315-0512-00			RES.,FXD,CMPSN:5.1K OHM,5%,0.25W	01121	CB5125
R5660	321-0318-00			RES.,FXD,FILM:20K OHM,1%,0.125W	91637	MFF1816G20001F
R5670	321-0289-00			RES.,FXD,FILM:10K OHM,1%,0.125W	91637	MFF1816G10001F
R5672	321-0289-00			RES.,FXD,FILM:10K OHM,1%,0.125W	91637	MFF1816G10001F
R5674	315-0470-00			RES.,FXD,CMPSN:47 OHM,5%,0.25W	01121	CB4705
R5680	321-0289-00			RES.,FXD,FILM:10K OHM,1%,0.125W	91637	MFF1816G10001F
R5693	321-0260-00			RES.,FXD,FILM:4.99K OHM,1%,0.125W	91637	MFF1816G49900F
R5694	321-0260-00			RES.,FXD,FILM:4.99K OHM,1%,0.125W	91637	MFF1816G49900F
R5695	315-0104-00			RES.,FXD,CMPSN:100K OHM,5%,0.25W	01121	CB1045
R5700	321-0289-00			RES.,FXD,FILM:10K OHM,1%,0.125W	91637	MFF1816G10001F
R5702	321-0289-00			RES.,FXD,FILM:10K OHM,1%,0.125W	91637	MFF1816G10001F
R5704	321-0279-00			RES.,FXD,FILM:7.87K OHM,1%,0.125W	91637	MFF1816G78700F
R5708	321-0275-00			RES.,FXD,FILM:7.15K OHM,1%,0.125W	91637	MFF1816G71500F
R5710	321-0289-00			RES.,FXD,FILM:10K OHM,1%,0.125W	91637	MFF1816G10001F
R5712	321-0289-00			RES.,FXD,FILM:10K OHM,1%,0.125W	91637	MFF1816G10001F
R5714	321-0289-00			RES.,FXD,FILM:10K OHM,1%,0.125W	91637	MFF1816G10001F
R5718	315-0104-00			RES.,FXD,CMPSN:100K OHM,5%,0.25W	01121	CB1045
R5720	321-0289-00			RES.,FXD,FILM:10K OHM,1%,0.125W	91637	MFF1816G10001F
R5726	315-0103-00			RES.,FXD,CMPSN:10K OHM,5%,0.25W	01121	CB1035
R5728	315-0105-00			RES.,FXD,CMPSN:1M OHM,5%,0.25W	01121	CB1055
R5729	315-0104-00			RES.,FXD,CMPSN:100K OHM,5%,0.25W	01121	CB1045
R5742	315-0474-00			RES.,FXD,CMPSN:470K OHM,5%,0.25W	01121	CB4745
R5744	315-0223-00			RES.,FXD,CMPSN:22K OHM,5%,0.25W	01121	CB2235
R5748	315-0474-00			RES.,FXD,CMPSN:470K OHM,5%,0.25W	01121	CB4745
R5760	321-0277-00			RES.,FXD,FILM:7.5K OHM,1%,0.125W	91637	MFF1816G75000F
R5762	321-0293-00			RES.,FXD,FILM:11K OHM,1%,0.125W	91637	MFF1816G11001F
R5764	315-0512-00			RES.,FXD,CMPSN:5.1K OHM,5%,0.25W	01121	CB5125
R5766	321-0289-00			RES.,FXD,FILM:10K OHM,1%,0.125W	91637	MFF1816G10001F
R5772	321-0318-00			RES.,FXD,FILM:20K OHM,1%,0.125W	91637	MFF1816G20001F
R5774	315-0470-00			RES.,FXD,CMPSN:47 OHM,5%,0.25W	01121	CB4705
R5776	321-0289-00			RES.,FXD,FILM:10K OHM,1%,0.125W	91637	MFF1816G10001F
R5778	321-0289-00			RES.,FXD,FILM:10K OHM,1%,0.125W	91637	MFF1816G10001F
R5780	321-0289-00			RES.,FXD,FILM:10K OHM,1%,0.125W	91637	MFF1816G10001F
R5790	321-0260-00			RES.,FXD,FILM:4.99K OHM,1%,0.125W	91637	MFF1816G49900F
R5791	315-0104-00			RES.,FXD,CMPSN:100K OHM,5%,0.25W	01121	CB1045
R5792	321-0260-00			RES.,FXD,FILM:4.99K OHM,1%,0.125W	91637	MFF1816G49900F
R5800	311-1226-00			RES.,VAR,NONWIR:2.5K OHM,20%,0.50W	32997	3386F-T04-252
R5802	321-0414-00			RES.,FXD,FILM:200K OHM,1%,0.125W	91637	MFF1816G20002F
R5804	315-0203-00			RES.,FXD,CMPSN:20K OHM,5%,0.25W	01121	CB2035

Ckt No.	Tektronix Part No.	Serial/Model No. Eff	Dscont	Name & Description	Mfr Code	Mfr Part Number
R5808	315-0105-00			RES.,FXD,CMPSN:1M OHM,5%,0.25W	01121	CB1055
R5810	315-0102-00			RES.,FXD,CMPSN:1K OHM,5%,0.25W	01121	CB1025
R5814	315-0102-00			RES.,FXD,CMPSN:1K OHM,5%,0.25W	01121	CB1025
R5824	315-0104-00			RES.,FXD,CMPSN:100K OHM,5%,0.25W	01121	CB1045
R5826	321-0231-00			RES.,FXD,FILM:2.49K OHM,1%,0.125W	91637	MFF1816G24900F
R5828	315-0332-00			RES.,FXD,CMPSN:3.3K OHM,5%,0.25W	01121	CB3325
R5830	315-0103-00			RES.,FXD,CMPSN:10K OHM,5%,0.25W	01121	CB1035
R5834	315-0274-00			RES.,FXD,CMPSN:270K OHM,5%,0.25W	01121	CB2745
R5838	315-0104-00			RES.,FXD,CMPSN:100K OHM,5%,0.25W	01121	CB1045
R5840	315-0103-00			RES.,FXD,CMPSN:10K OHM,5%,0.25W	01121	CB1035
R5842	315-0105-00			RES.,FXD,CMPSN:1M OHM,5%,0.25W	01121	CB1055
R5850	315-0223-00			RES.,FXD,CMPSN:22K OHM,5%,0.25W	01121	CB2235
R5854	311-1232-00			RES.,VAR,NONWIR:50K OHM,20%,0.50W	32997	3386F-T04-503
R5858	311-1232-00			RES.,VAR,NONWIR:50K OHM,20%,0.50W	32997	3386F-T04-503
R5860	321-0373-00			RES.,FXD,FILM:75K OHM, 1%,0.125W	91637	MFF1816G75001F
R5862	321-0285-00			RES.,FXD,FILM:9.09K OHM,1%,0.125W	91637	MFF1816G90900F
R5863	321-0344-00			RES.,FXD,FILM:37.4K OHM,1%,0.125W	91637	MFF1816G37401F
R5864	321-0373-00			RES.,FXD,FILM:75K OHM, 1%,0.125W	91637	MFF1816G75001F
R5866	321-0277-00			RES.,FXD,FILM:7.5K OHM,1%,0.125W	91637	MFF1816G75000F
R5870	321-0289-00			RES.,FXD,FILM:10K OHM,1%,0.125W	91637	MFF1816G10001F
R5872	315-0512-00			RES.,FXD,CMPSN:5.1K OHM,5%,0.25W	01121	CB5125
R5874	311-1232-00			RES.,VAR,NONWIR:50K OHM,20%,0.50W	32997	3386F-T04-503
R5876	311-1232-00			RES.,VAR,NONWIR:50K OHM,20%,0.50W	32997	3386F-T04-503
R5878	321-0318-00			RES.,FXD,FILM:20K OHM,1%,0.125W	91637	MFF1816G20001F
R5880	315-0470-00			RES.,FXD,CMPSN:47 OHM,5%,0.25W	01121	CB4705
R5882	321-0289-00			RES.,FXD,FILM:10K OHM,1%,0.125W	91637	MFF1816G10001F
R5884	321-0289-00			RES.,FXD,FILM:10K OHM,1%,0.125W	91637	MFF1816G10001F
R5886	321-0289-00			RES.,FXD,FILM:10K OHM,1%,0.125W	91637	MFF1816G10001F
R5892	311-1230-00			RES.,VAR,NONWIR:20K OHM,20%,0.50W	32997	3386F-T04-203
R5894	311-1230-00			RES.,VAR,NONWIR:20K OHM,20%,0.50W	32997	3386F-T04-203
R5896	321-0260-00			RES.,FXD,FILM:4.99K OHM,1%,0.125W	91637	MFF1816G49900F
R5897	321-0260-00			RES.,FXD,FILM:4.99K OHM,1%,0.125W	91637	MFF1816G49900F
R5898	315-0104-00			RES.,FXD,CMPSN:100K OHM,5%,0.25W	01121	CB1045
R9202	315-0124-00			RES.,FXD,CMPSN:120K OHM,5%,0.25W	01121	CB1245
R9210	311-0326-00			RES.,VAR,NONWIR:10K OHM,20%,0.50W	01121	W7683
R9215	311-0326-00			RES.,VAR,NONWIR:10K OHM,20%,0.50W	01121	W7683
R9800	315-0101-00			RES.,FXD,CMPSN:100 OHM,5%,0.25W	01121	CB1015
R9801	311-1268-00			RES.,VAR,NONWIR:10K OHM,10%,0.50W	32997	3329P-L58-103
R9802	315-0101-00			RES.,FXD,CMPSN:100 OHM,5%,0.25W	01121	CB1015
R9803	301-0510-00			RES.,FXD,CMPSN:51 OHM,5%,0.50W	01121	EB5105
R9804	308-0463-00	B010100	B060469	RES.,FXD,WW:0.3 OHM,1%,3W	91637	RS2B-KR3000F
R9804	308-0590-00	B060470		RES.,FXD,WW:0.25 OHM,5%,3W	91637	RS2B-ER2500J
R9806	315-0431-00			RES.,FXD,CMPSN:430 OHM,5%,0.25W	01121	CB4315
R9808	321-0197-00			RES.,FXD,FILM:1.1K OHM,1%,0.125W	91637	MFF1816G11000F
R9810	321-0189-00			RES.,FXD,FILM:909 OHM,1%,0.125W	91637	MFF1816G909R0F
R9812	315-0752-00			RES.,FXD,CMPSN:7.5K OHM,5%,0.25W	01121	CB7525
R9814	315-0101-00			RES.,FXD,CMPSN:100 OHM,5%,0.25W	01121	CB1015
R9816	315-0471-00			RES.,FXD,CMPSN:470 OHM,5%,0.25W	01121	CB4715
R9818	315-0751-00			RES.,FXD,CMPSN:750 OHM,5%,0.25W	01121	CB7515
R9830	315-0101-00			RES.,FXD,CMPSN:100 OHM,5%,0.25W	01121	CB1015
R9831	311-1268-00			RES.,VAR,NONWIR:10K OHM,10%,0.50W	32997	3329P-L58-103
R9832	308-0245-00	B010100	B060469	RES.,FXD,WW:0.6 OHM,5%,2W	91637	CW-2B30.60HM 5%
R9832	308-0499-00	B060470		RES.,FXD,WW:0.5 OHM,10%,2.5W AXIAL	91637	RS2B-ER5000K
R9834	315-0101-00			RES.,FXD,CMPSN:100 OHM,5%,0.25W	01121	CB1015
R9836	315-0431-00			RES.,FXD,CMPSN:430 OHM,5%,0.25W	01121	CB4315
R9838	321-0224-00			RES.,FXD,FILM:2.1K OHM,1%,0.125W	91637	MFF1816G21000F
R9840	321-0189-00			RES.,FXD,FILM:909 OHM,1%,0.125W	91637	MFF1816G909R0F

Ckt No.	Tektronix Part No.	Serial/Model No. Eff	Dscont	Name & Description	Mfr Code	Mfr Part Number
R9842	315-0472-00			RES.,FXD,CMPSN:4.7K OHM,5%,0.25W	01121	CB4725
R9844	315-0471-00			RES.,FXD,CMPSN:470 OHM,5%,0.25W	01121	CB4715
R9846	315-0301-00			RES.,FXD,CMPSN:300 OHM,5%,0.25W	01121	CB3015
R9848	315-0182-00			RES.,FXD,CMPSN:1.8K OHM,5%,0.25W	01121	CB1825
R9850	315-0152-00			RES.,FXD,CMPSN:1.5K OHM,5%,0.25W	01121	CB1525
R9851	311-1268-00			RES.,VAR,NONWIR:10K OHM,10%,0.50W	32997	3329P-L58-103
R9852	315-0431-00			RES.,FXD,CMPSN:430 OHM,5%,0.25W	01121	CB4315
R9854	321-0172-00			RES.,FXD,FILM:604 OHM,1%,0.125W	91637	MFF1816G604R0F
R9856	321-0189-00			RES.,FXD,FILM:909 OHM,1%,0.125W	91637	MFF1816G909R0F
R9858	321-0173-00			RES.,FXD,FILM:619 OHM,1%,0.125W	91637	MFF1816G619R0F
R9860	315-0471-00			RES.,FXD,CMPSN:470 OHM,5%,0.25W	01121	CB4715
R9862	315-0301-00			RES.,FXD,CMPSN:300 OHM,5%,0.25W	01121	CB3015
R9864	315-0472-00			RES.,FXD,CMPSN:4.7K OHM,5%,0.25W	01121	CB4725
R9866	315-0101-00			RES.,FXD,CMPSN:100 OHM,5%,0.25W	01121	CB1015
R9868	315-0101-00			RES.,FXD,CMPSN:100 OHM,5%,0.25W	01121	CB1015
R9870	315-0331-00			RES.,FXD,CMPSN:330 OHM,5%,0.25W	01121	CB3315
R9872	315-0392-00			RES.,FXD,CMPSN:3.9K OHM,5%,0.25W	01121	CB3925
R9874	308-0245-00	B010100	B060469	RES.,FXD,WW:0.6 OHM,5%,2W	91637	CW-2B30.60HM 5%
R9874	308-0499-00	B060470		RES.,FXD,WW:0.5 OHM,10%,2.5W AXIAL	91637	RS2B-ER5000K
S9201	260-0834-00			SWITCH,TOGGLE:DPDT,5A,125VAC,0.25-40 THD	09353	U21-SHZQE
T9001	120-0737-00			XFMR,PWR,STPDN:	80009	120-0737-00
U526B	156-0041-00	XB060372		MICROCIRCUIT,DI:DUAL D-TYPE FLIP-FLOP	27014	DM7474N
U663	156-0030-00			MICROCIRCUIT,DI:QUAD 2-INPUT POS NAND GATE	80009	156-0030-00
U664	156-0072-00			MICROCIRCUIT,DI:MONOSTABLE MV,TTL,14 DIP	80009	156-0072-00
U665	156-0072-00			MICROCIRCUIT,DI:MONOSTABLE MV,TTL,14 DIP	80009	156-0072-00
U666	156-0072-00			MICROCIRCUIT,DI:MONOSTABLE MV,TTL,14 DIP	80009	156-0072-00
U668	156-0030-00			MICROCIRCUIT,DI:QUAD 2-INPUT POS NAND GATE	80009	156-0030-00
U699	156-0158-00	B010100	B060659	MICROCIRCUIT,LI:DUAL OPERATIONAL AMPLIFIER	80009	156-0158-00
U699	156-0158-04	B060660		MICROCIRCUIT,LI:DUAL OPERATIONAL AMPLIFIER	80009	156-0158-04
U1360	155-0032-01	B010100	B061118	MICROCIRCUIT,LI:MONOLITHIC,INPUT PRE-AMPL	80009	155-0032-01
U1360	155-0216-00	B061119		MICROCIRCUIT,LI:PLRT INV & TRIG PICK OFF	80009	155-0216-00
U1666	156-0158-00	B010100	B060659	MICROCIRCUIT,LI:DUAL OPERATIONAL AMPLIFIER	80009	156-0158-00
U1666	156-0158-04	B060660		MICROCIRCUIT,LI:DUAL OPERATIONAL AMPLIFIER	80009	156-0158-04
U1668	156-0158-00	B010100	B060659	MICROCIRCUIT,LI:DUAL OPERATIONAL AMPLIFIER	80009	156-0158-00
U1668	156-0158-04	B060660		MICROCIRCUIT,LI:DUAL OPERATIONAL AMPLIFIER	80009	156-0158-04
U1690	155-0032-01	B010100	B061118	MICROCIRCUIT,LI:MONOLITHIC,INPUT PRE-AMPL	80009	155-0032-01
U1690	155-0216-00	B061119		MICROCIRCUIT,LI:PLRT INV & TRIG PICK OFF	80009	155-0216-00
U3100	156-0041-00			MICROCIRCUIT,DI:DUAL D-TYPE FLIP-FLOP	27014	DM7474N
U3102	156-0172-00			MICROCIRCUIT,DI:DUAL RETRIG ONE-SHOT W/CLR	80009	156-0172-00
U3128	156-0041-00			MICROCIRCUIT,DI:DUAL D-TYPE FLIP-FLOP	27014	DM7474N
U3134	156-0041-00			MICROCIRCUIT,DI:DUAL D-TYPE FLIP-FLOP	27014	DM7474N
U3150	156-0072-00			MICROCIRCUIT,DI:MONOSTABLE MV,TTL,14 DIP	80009	156-0072-00
U3160	156-0131-00			MICROCIRCUIT,DI:8-BIT SER-IN PAR OUT SR	80009	156-0131-00
U3170	156-0032-00			MICROCIRCUIT,DI:4-BIT BINARY COUNTER	80009	156-0032-00
U3180	156-0032-00			MICROCIRCUIT,DI:4-BIT BINARY COUNTER	80009	156-0032-00
U3190	156-0042-00			MICROCIRCUIT,DI:J-K M/S FLIP-FLOP	80009	156-0042-00
U3272	156-0149-00			MICROCIRCUIT,DI:DUAL 4-INPUT NAND SCHMITT	80009	156-0149-00
U3276	156-0072-00			MICROCIRCUIT,DI:MONOSTABLE MV,TTL,14 DIP	80009	156-0072-00
U3284	156-0034-00			MICROCIRCUIT,DI:DUAL 4-INPUT NAND GATE	80009	156-0034-00
U3310	156-0158-00	B010100	B060659	MICROCIRCUIT,LI:DUAL OPERATIONAL AMPLIFIER	80009	156-0158-00
U3310	156-0158-04	B060660		MICROCIRCUIT,LI:DUAL OPERATIONAL AMPLIFIER	80009	156-0158-04
U3330	156-0172-00			MICROCIRCUIT,DI:DUAL RETRIG ONE-SHOT W/CLR	80009	156-0172-00
U3350	156-0030-00			MICROCIRCUIT,DI:QUAD 2-INPUT POS NAND GATE	80009	156-0030-00
U3360	156-0172-00			MICROCIRCUIT,DI:DUAL RETRIG ONE-SHOT W/CLR	80009	156-0172-00
U3370	156-0034-00			MICROCIRCUIT,DI:DUAL 4-INPUT NAND GATE	80009	156-0034-00

Ckt No.	Tektronix Part No.	Serial/Model No. Eff	Dscont	Name & Description	Mfr Code	Mfr Part Number
U3380	156-0047-00			MICROCIRCUIT,DI:TPL 3-INPUT POS NAND GATE	80009	156-0047-00
U3562	156-0030-00			MICROCIRCUIT,DI:QUAD 2-INPUT POS NAND GATE	80009	156-0030-00
U3570	156-0158-00	B010100	B060659	MICROCIRCUIT,LI:DUAL OPERATIONAL AMPLIFIER	80009	156-0158-00
U3570	156-0158-04	B060660		MICROCIRCUIT,LI:DUAL OPERATIONAL AMPLIFIER	80009	156-0158-04
U3590	156-0030-00			MICROCIRCUIT,DI:QUAD 2-INPUT POS NAND GATE	80009	156-0030-00
U3750	156-0172-00			MICROCIRCUIT,DI:DUAL RETRIG ONE-SHOT W/CLR	80009	156-0172-00
U3756	156-0072-00			MICROCIRCUIT,DI:MONOSTABLE MV,TTL,14 DIP	80009	156-0072-00
U3762	156-0041-00			MICROCIRCUIT,DI:DUAL D-TYPE FLIP-FLOP	27014	DM7474N
U3766	156-0172-00			MICROCIRCUIT,DI:DUAL RETRIG ONE-SHOT W/CLR	80009	156-0172-00
U3768	156-0030-00			MICROCIRCUIT,DI:QUAD 2-INPUT POS NAND GATE	80009	156-0030-00
U3780	156-0072-00			MICROCIRCUIT,DI:MONOSTABLE MV,TTL,14 DIP	80009	156-0072-00
U3850	156-0057-00			MICROCIRCUIT,DI:QUAD 2-INPUT NAND GATE	80009	156-0057-00
U4212	156-0289-00			MICROCIRCUIT,DI:QUAD BILATERAL SWITCH	80009	156-0289-00
U4436	156-0158-00	B010100	B060659	MICROCIRCUIT,LI:DUAL OPERATIONAL AMPLIFIER	80009	156-0158-00
U4436	156-0158-04	B060660		MICROCIRCUIT,LI:DUAL OPERATIONAL AMPLIFIER	80009	156-0158-04
U4464	156-0130-00			MICROCIRCUIT,LI:BALANCED MODEM	80009	156-0130-00
U4658	156-0130-00			MICROCIRCUIT,LI:BALANCED MODEM	80009	156-0130-00
U4730	156-0158-00	B010100	B060659	MICROCIRCUIT,LI:DUAL OPERATIONAL AMPLIFIER	80009	156-0158-00
U4730	156-0158-04	B060660		MICROCIRCUIT,LI:DUAL OPERATIONAL AMPLIFIER	80009	156-0158-04
U4736	156-0158-00	B010100	B060659	MICROCIRCUIT,LI:DUAL OPERATIONAL AMPLIFIER	80009	156-0158-00
U4736	156-0158-04	B060660		MICROCIRCUIT,LI:DUAL OPERATIONAL AMPLIFIER	80009	156-0158-04
U4800	156-0158-00	B010100	B060659	MICROCIRCUIT,LI:DUAL OPERATIONAL AMPLIFIER	80009	156-0158-00
U4800	156-0158-04	B060660		MICROCIRCUIT,LI:DUAL OPERATIONAL AMPLIFIER	80009	156-0158-04
U4810	156-0158-00	B010100	B060659	MICROCIRCUIT,LI:DUAL OPERATIONAL AMPLIFIER	80009	156-0158-00
U4810	156-0158-04	B060660		MICROCIRCUIT,LI:DUAL OPERATIONAL AMPLIFIER	80009	156-0158-04
U4816	156-0158-00	B010100	B060659	MICROCIRCUIT,LI:DUAL OPERATIONAL AMPLIFIER	80009	156-0158-00
U4816	156-0158-04	B060660		MICROCIRCUIT,LI:DUAL OPERATIONAL AMPLIFIER	80009	156-0158-04
U4860	156-0130-00			MICROCIRCUIT,LI:BALANCED MODEM	80009	156-0130-00
U5122	156-0200-00			MICROCIRCUIT,LI:LOW INPUT/OFFSET CURRENT	80009	156-0200-00
U5166	156-0158-00	B010100	B060659	MICROCIRCUIT,LI:DUAL OPERATIONAL AMPLIFIER	80009	156-0158-00
U5166	156-0158-04	B060660		MICROCIRCUIT,LI:DUAL OPERATIONAL AMPLIFIER	80009	156-0158-04
U5184	156-0158-00	B010100	B060659	MICROCIRCUIT,LI:DUAL OPERATIONAL AMPLIFIER	80009	156-0158-00
U5184	156-0158-04	B060660		MICROCIRCUIT,LI:DUAL OPERATIONAL AMPLIFIER	80009	156-0158-04
U5222	156-0200-00			MICROCIRCUIT,LI:LOW INPUT/OFFSET CURRENT	80009	156-0200-00
U5322	156-0200-00			MICROCIRCUIT,LI:LOW INPUT/OFFSET CURRENT	80009	156-0200-00
U5460	156-0158-00	B010100	B060659	MICROCIRCUIT,LI:DUAL OPERATIONAL AMPLIFIER	80009	156-0158-00
U5460	156-0158-04	B060660		MICROCIRCUIT,LI:DUAL OPERATIONAL AMPLIFIER	80009	156-0158-04
U5480	156-0158-00	B010100	B060659	MICROCIRCUIT,LI:DUAL OPERATIONAL AMPLIFIER	80009	156-0158-00
U5480	156-0158-04	B060660		MICROCIRCUIT,LI:DUAL OPERATIONAL AMPLIFIER	80009	156-0158-04
U5626	156-0200-00			MICROCIRCUIT,LI:LOW INPUT/OFFSET CURRENT	80009	156-0200-00
U5706	156-0158-00	B010100	B060659	MICROCIRCUIT,LI:DUAL OPERATIONAL AMPLIFIER	80009	156-0158-00
U5706	156-0158-04	B060660		MICROCIRCUIT,LI:DUAL OPERATIONAL AMPLIFIER	80009	156-0158-04
U5730	156-0200-00			MICROCIRCUIT,LI:LOW INPUT/OFFSET CURRENT	80009	156-0200-00
U5818	156-0158-00	B010100	B060659	MICROCIRCUIT,LI:DUAL OPERATIONAL AMPLIFIER	80009	156-0158-00
U5818	156-0158-04	B060660		MICROCIRCUIT,LI:DUAL OPERATIONAL AMPLIFIER	80009	156-0158-04
U5844	156-0200-00			MICROCIRCUIT,LI:LOW INPUT/OFFSET CURRENT	80009	156-0200-00
U5868	156-0158-00	B010100	B060659	MICROCIRCUIT,LI:DUAL OPERATIONAL AMPLIFIER	80009	156-0158-00
U5868	156-0158-04	B060660		MICROCIRCUIT,LI:DUAL OPERATIONAL AMPLIFIER	80009	156-0158-04
U5888	156-0158-00	B010100	B060660	MICROCIRCUIT,LI:DUAL OPERATIONAL AMPLIFIER	80009	156-0158-00
U5888	156-0158-04	B060660		MICROCIRCUIT,LI:DUAL OPERATIONAL AMPLIFIER	80009	156-0158-04
VR1792	152-0212-00			SEMICOND DEVICE:ZENER,0.5W,9V,5%	80009	152-0212-00
VR4120	152-0127-00			SEMICOND DEVICE:ZENER,0.4W,7.5V,5%	80009	152-0127-00
VR4326	152-0127-00			SEMICOND DEVICE:ZENER,0.4W,7.5V,5%	80009	152-0127-00
VR4848	152-0306-00			SEMICOND DEVICE:ZENER,0.4W,9.1V,5%	80009	152-0306-00
VR5254	152-0127-00			SEMICOND DEVICE:ZENER,0.4W,7.5V,5%	80009	152-0127-00
VR5354	152-0278-00			SEMICOND DEVICE:ZENER,0.4W,3V,5%	80009	152-0278-00
VR9850	152-0212-00			SEMICOND DEVICE:ZENER,0.5W,9V,5%	80009	152-0212-00
Y4780	158-0069-00			XTAL UNIT,QTZ:3.579545 MHZ,+/-0.0035%	75378	TX-005

DIAGRAMS AND CIRCUIT BOARD ILLUSTRATIONS

Symbols and Reference Designators

Electrical components shown on the diagrams are in the following units unless noted otherwise:

Capacitors = Values one or greater are in picofarads (pF).
Values less than one are in microfarads (μF).
Resistors = Ohms (Ω).

Graphic symbols and class designation letters are based on ANSI Standard Y32.2-1975.

Logic symbology is based on ANSI Y32.14-1973 in terms of positive logic. Logic symbols depict the logic function performed and may differ from the manufacturer's data.

Abbreviations are based on ANSI Y1.1-1972.
Other ANSI standards that are used in the preparation of diagrams by Tektronix, Inc. are:

Y14.15, 1966	Drafting Practices.
Y14.2, 1973	Line Conventions and Lettering.
Y10.5, 1968	Letter Symbols for Quantities Used in Electrical Science and Electrical Engineering.

The following prefix letters are used as reference designators to identify components or assemblies on the diagrams.

A	Assembly, separable or repairable (circuit board, etc)
AT	Attenuator, fixed or variable
B	Motor
BT	Battery
C	Capacitor, fixed or variable
CB	Circuit breaker
CR	Diode, signal or rectifier
DL	Delay line
DS	Indicating device (lamp)
E	Spark Gap, Ferrite bead
F	Fuse
FL	Filter
H	Heat dissipating device (heat sink, heat radiator, etc)
HR	Heater
HY	Hybrid circuit
J	Connector, stationary portion
K	Relay
L	Inductor, fixed or variable
M	Meter
P	Connector, movable portion
Q	Transistor or silicon-controlled rectifier
R	Resistor, fixed or variable
RT	Thermistor
S	Switch or contactor
T	Transformer
TC	Thermocouple
TP	Test point
U	Assembly, inseparable or non-repairable (integrated circuit, etc.)
V	Electron tube
VR	Voltage regulator (zener diode, etc.)
W	Wirestrap or cable
Y	Crystal
Z	Phase shifter

The following special symbols may appear on the diagrams:

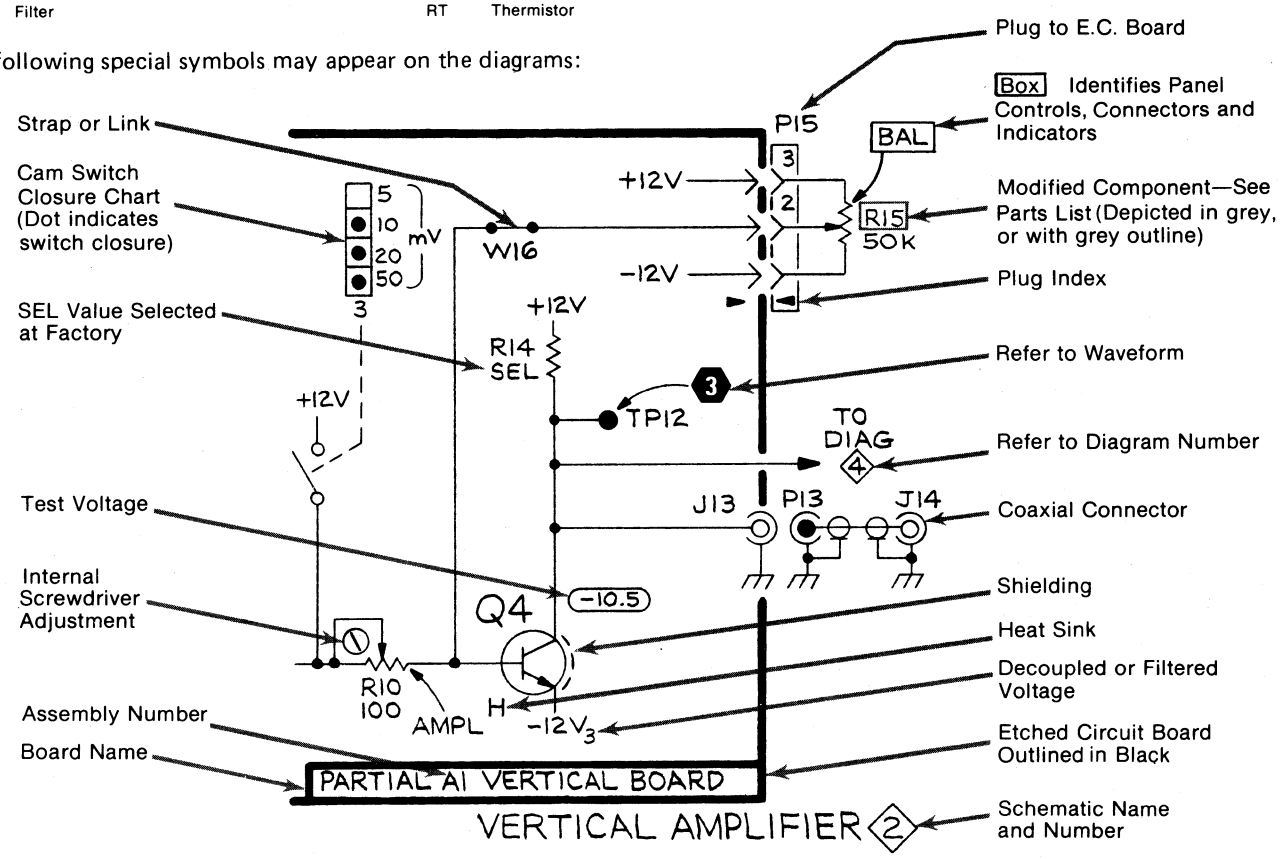

1440 IC DIAGRAMS

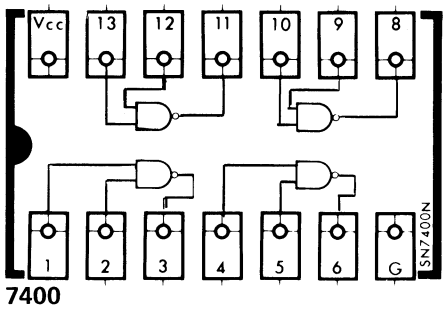

7400

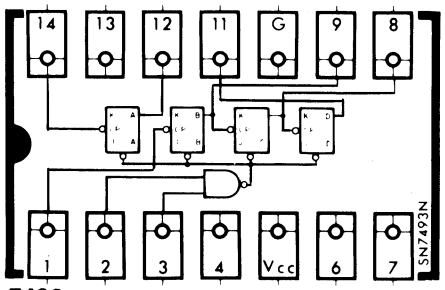

7493

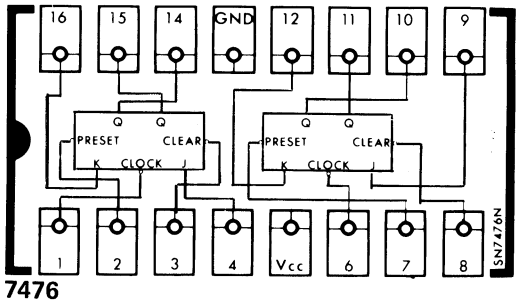

7476

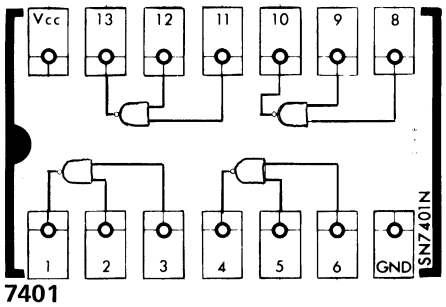

7401

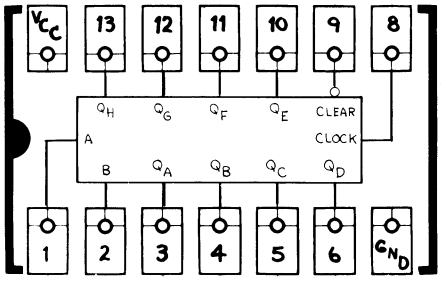

74164

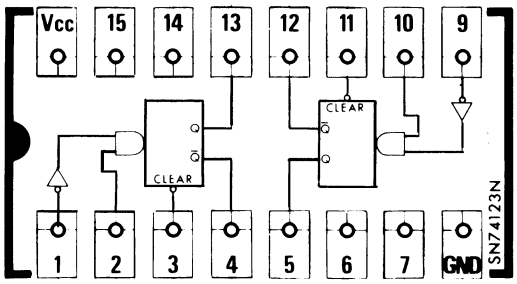

74123

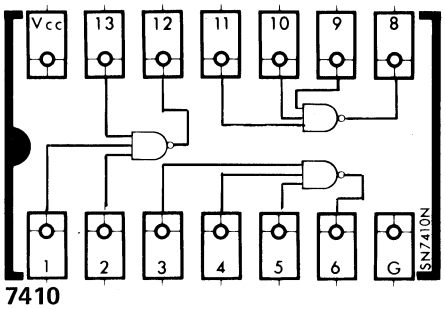

7410

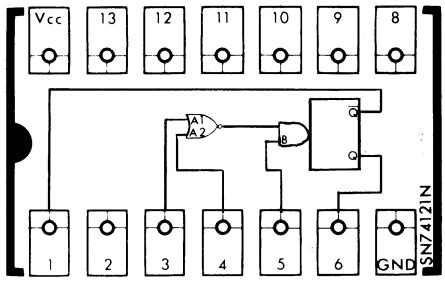

74121

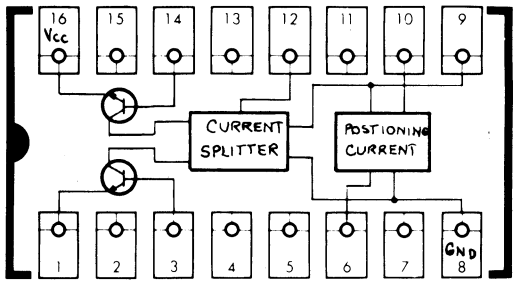

155-0032-01

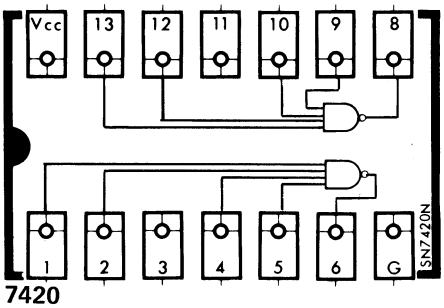

7420

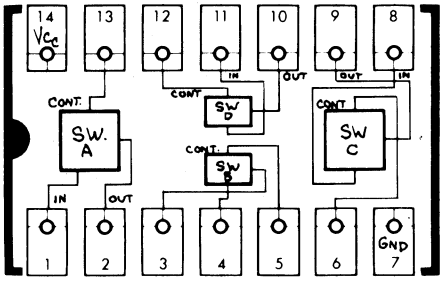

CD4016AE

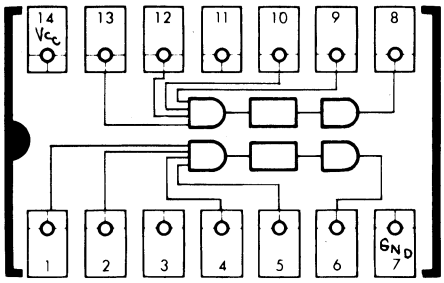

N7413

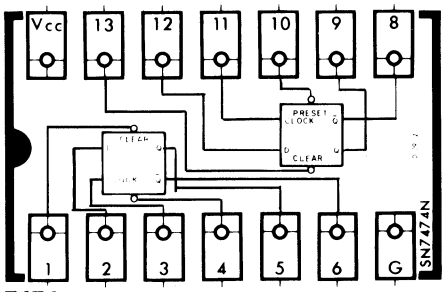

7474

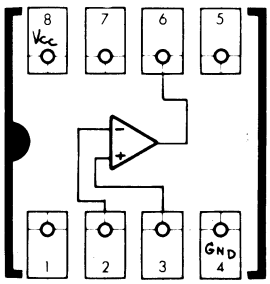

5556

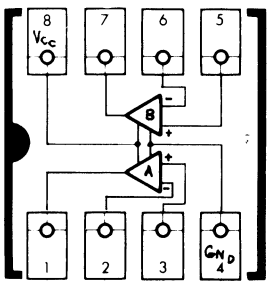

5558 OR 1458

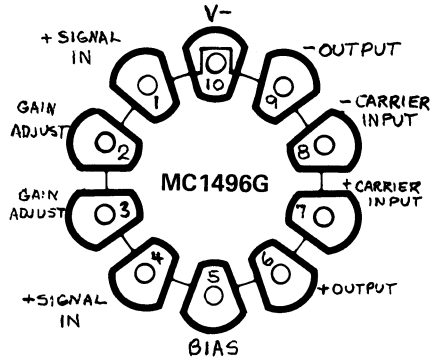

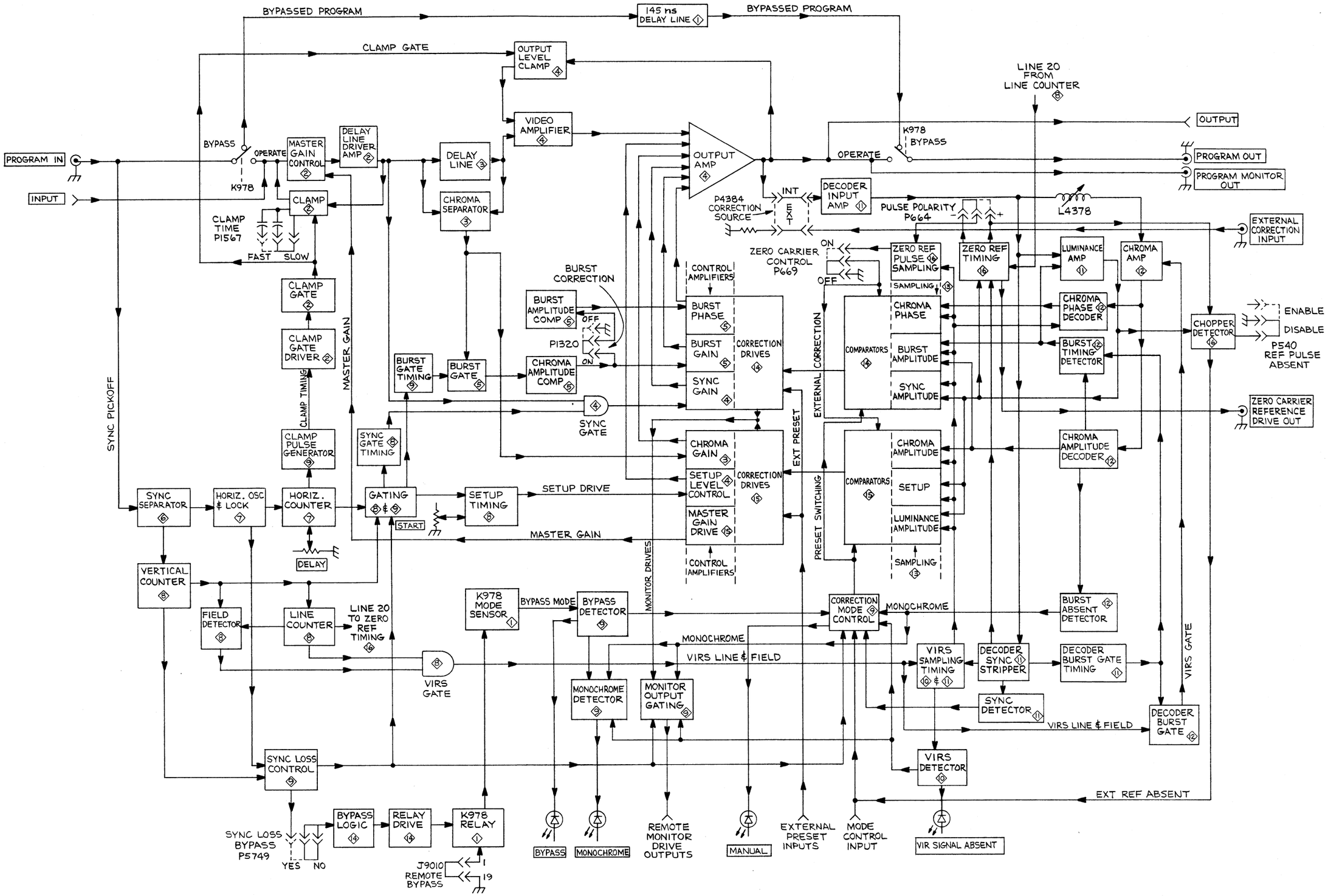

1440

BLOCK DIAGRAM

REV. B, APR 1977

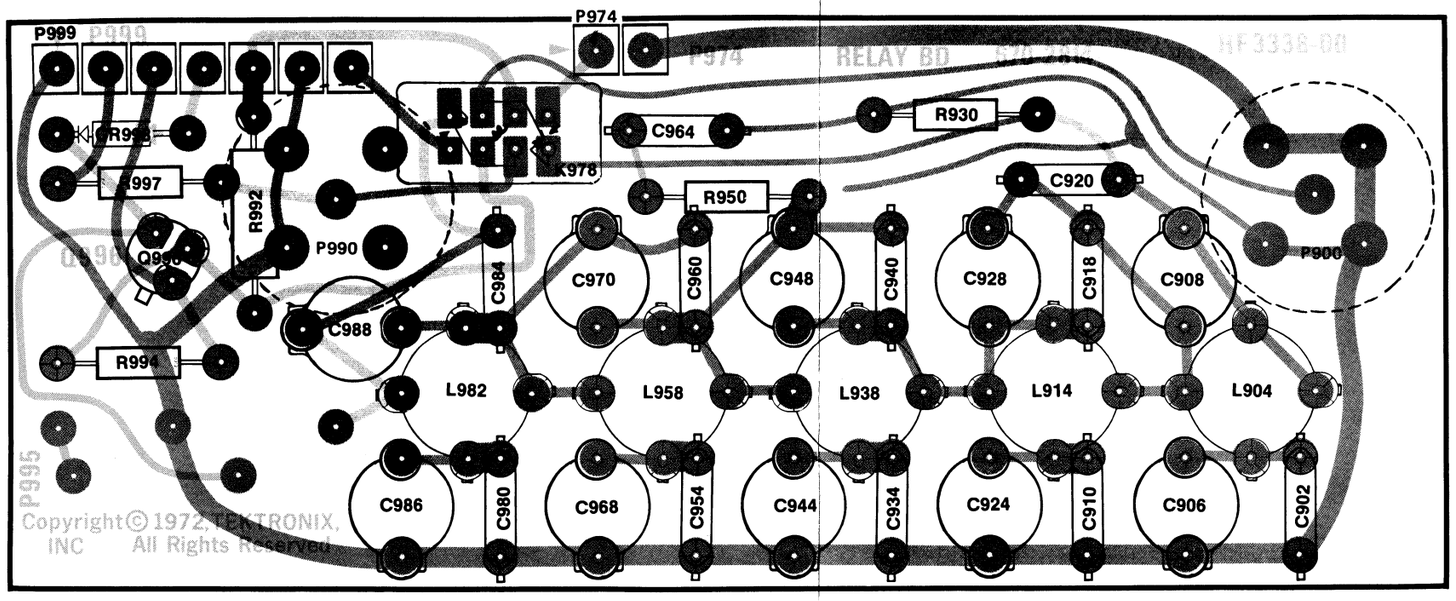

REV. B, APR. 1977

A8 RELAY BOARD

1

PARTS LOCATING CHART

C902	B-9
C906	B-8
C908	A-9
C910	B-8
C918	A-8
C920	A-9
C924	B-8
C928	A-8
C934	B-7
C940	A-7
C944	B-7
C948	A-7
C954	B-6
C960	A-6
C964	B-6
C968	B-6
C970	A-6
C980	B-5
C984	A-5
C986	B-5
C988	A-5
CR998	D-3
J 9005	C-1
J 9015	B-1
J 9040	E-9
J 9060	E-1
J 9080	D-9
J 9090	E-9
L904	B-9
L914	B-8
L938	B-7
L958	B-6
L982	B-5
Q996	D-3
R930	B-9
R950	B-6
R992	D-3
R994	D-3
R996	C-3
R997	B-2

NOTE:

SEE PARTS LISTS FOR SEMICONDUCTOR TYPES.

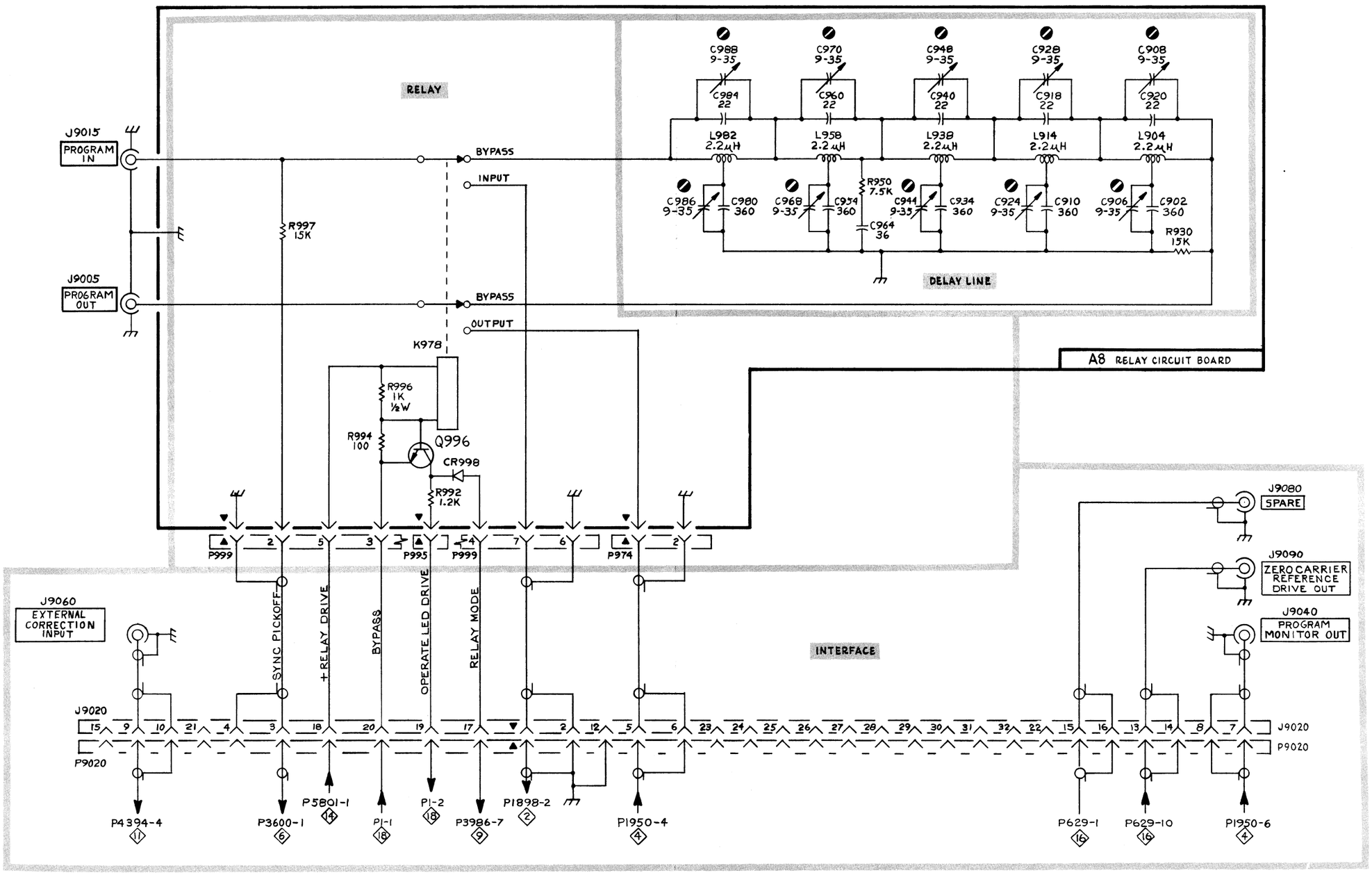

REV. B, APR 1977

INTERFACE & RELAY 1

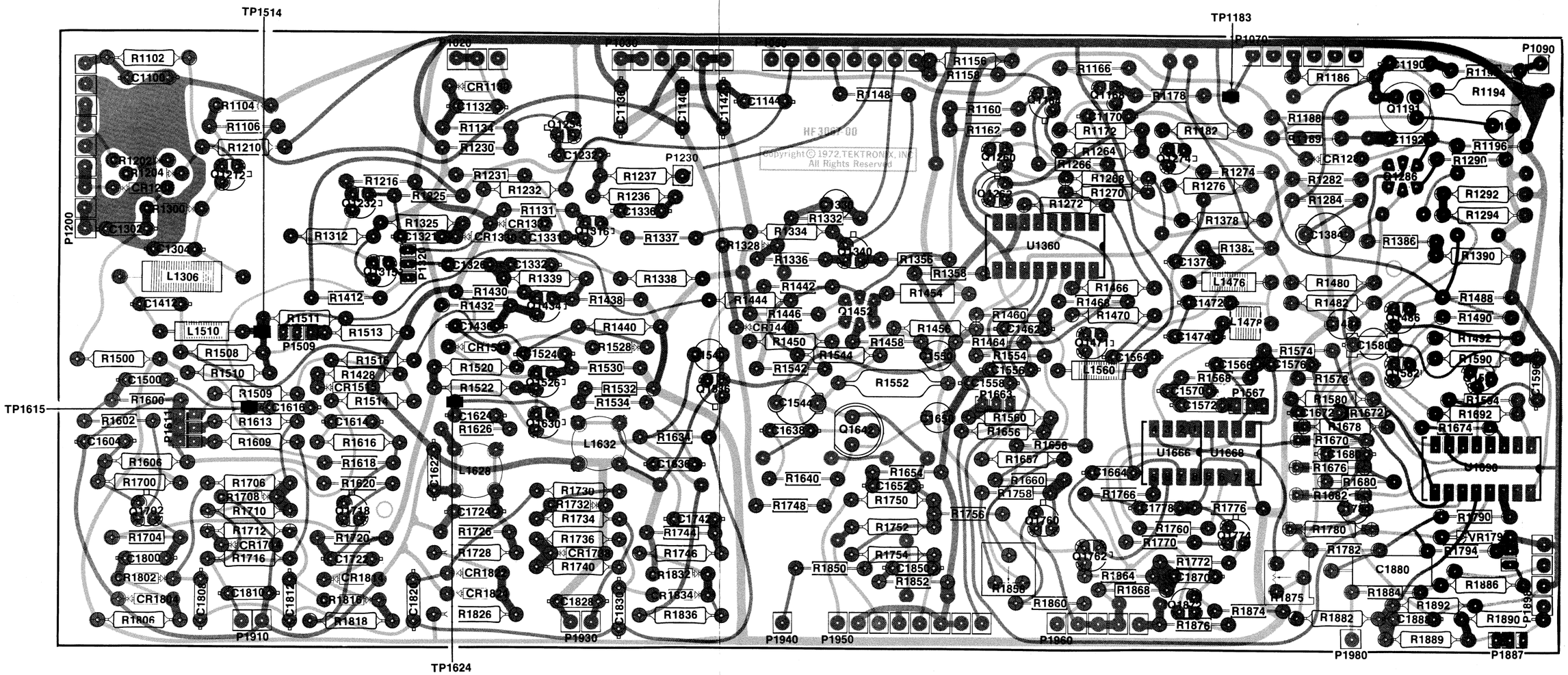

A1 PROCESSING BOARD

REV. C, APR. 1977

2

PARTS LOCATING CHART

C1136	G-9
C1140	G-8
C1142	F-9
C1190	E-6
C1192	D-6
C1195	D-7
C1376	B-9
C1384	E-6
C1472	B-8
C1474	B-8
C1484	C-6
C1540	G-8
C1566	B-4
C1570	A-4
C1572	A-4
C1576	B-3
C1580	E-5
C1596	E-4
C1672	B-4
C1680	C-3
C1778	B-6
C1784	F-8
C1870	A-2
C1880	E-1
C1886	E-1
C1888	D-3
CR1280	D-6
VR1792	F-8
L1476	B-9
L1478	B-8
Q1774	B-6
Q1191	D-7
Q1286A	C-5
Q1286B	C-6
Q1486	G-3
Q1582	F-4
Q1592	E-3
Q1872	A-2
R1186	D-9
R1188	C-7
R1189	D-6
R1193	E-6
R1194	F-7
R1196	D-6
R1282	C-5
R1284	E-6
R1290	C-5
R1292	G-3
R1294	G-3
R1382	C-9
R1386	C-6
R1390	C-7
R1480	E-6
R1482	C-7
R1488	F-3
R1490	F-4
R1492	F-4
R1568	A-4
R1574	B-3
R1578	B-4
R1580	C-5
R1590	F-4
R1594	E-4
R1670	B-4
R1672	B-4
R1674	E-5
R1676	B-3
R1678	D-3
R1680	C-3
R1682	C-3
R1692	F-4
R1760	B-5
R1770	B-7
R1772	A-6
R1780	F-8
R1782	E-2
R1790	E-3
R1794	E-2
R1868	A-2
R1874	A-2
R1875	D-2
R1876	A-1
R1882	D-2
R1884	D-1
R1886	E-1
R1888	D-3
R1889	D-2
R1890	D-1
R1892	C-3
U1666A	B-8
U1668A	B-4
U1668B	B-5
U1690	D-4

NOTES:

1. SEE PARTS LIST FOR SEMICONDUCTOR TYPES.
2. U1666 & U1668: PIN 8 IS CONNECTED TO +15 V, PIN 4 IS CONNECTED TO –15 V.

1

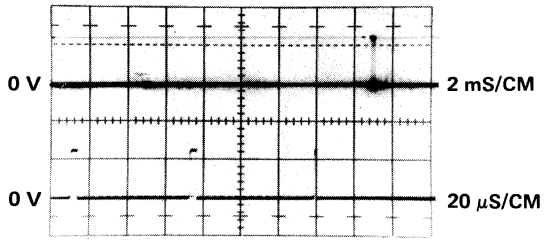

D.T.M. 8.5
10 X probe to R1772
VOLTS/CM 1

2

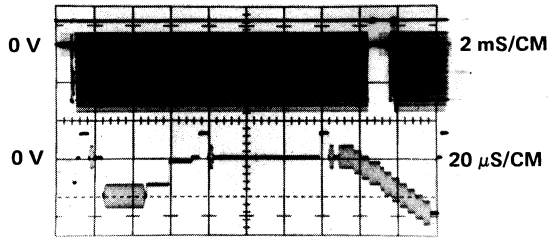

D.T.M. 8.9
10X probe to collector of Q1191
VOLTS/CM .05

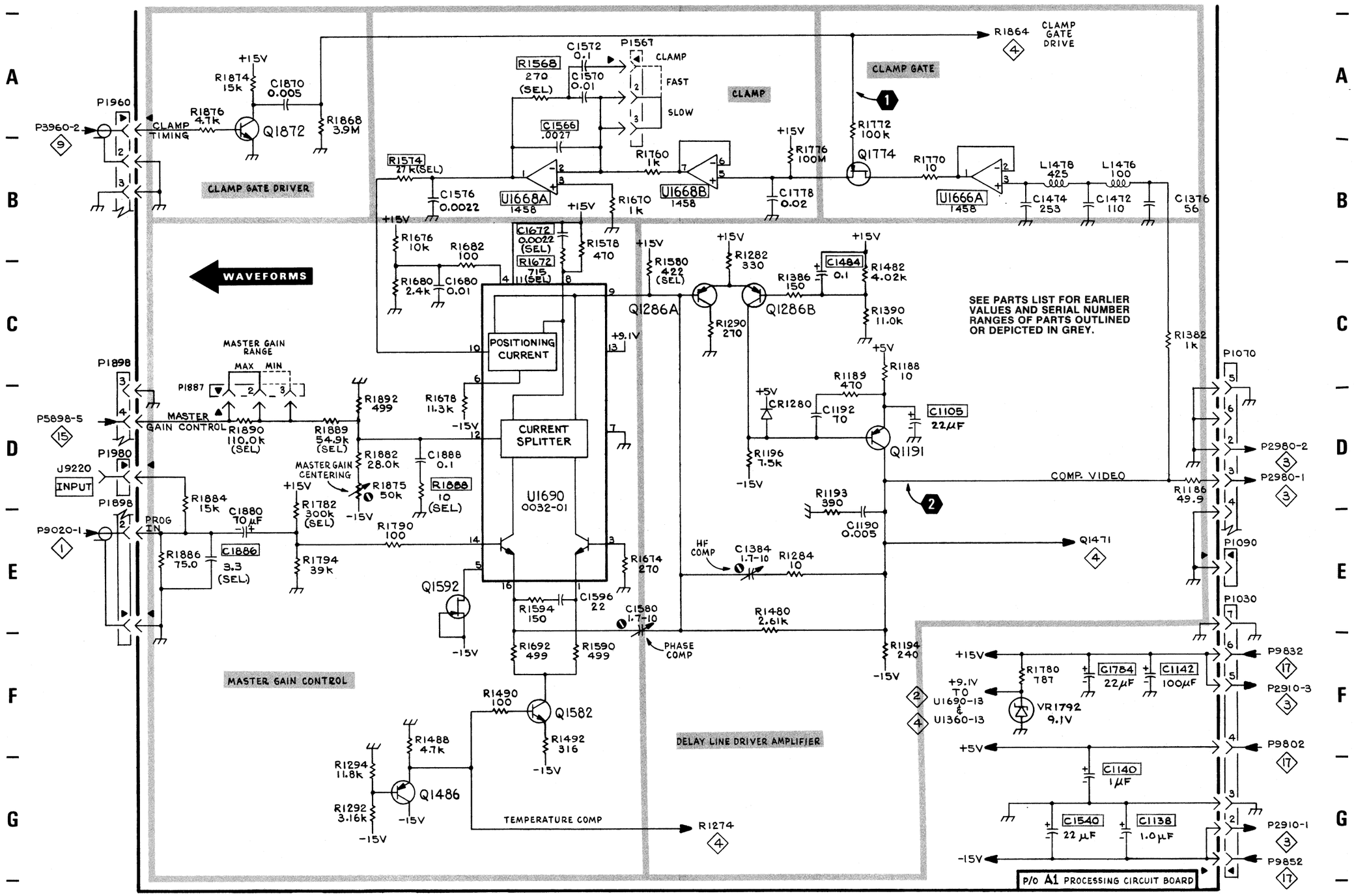
CLAMP GATE DRIVER
CLAMP
CLAMP GATE
MASTER GAIN CONTROL
DELAY LINE DRIVER AMPLIFIER
WAVEFORMS
SEE PARTS LIST FOR EARLIER VALUES AND SERIAL NUMBER RANGES OF PARTS OUTLINED OR DEPICTED IN GREY.
POSITIONING CURRENT
CURRENT SPLITTER
U1690 0032-01
U1668A 1458
U1668B 1458
U1666A 1458
Q1774
Q1286A
Q1286B
Q1191
Q1592
Q1582
Q1486
VR1792 9.1V
MASTER GAIN RANGE
MAX MIN
MASTER GAIN CONTROL
MASTER GAIN CENTERING
CLAMP TIMING
PROG IN
INPUT
COMP. VIDEO
HF COMP
PHASE COMP
TEMPERATURE COMP
CLAMP GATE DRIVE
P/O A1 PROCESSING CIRCUIT BOARD

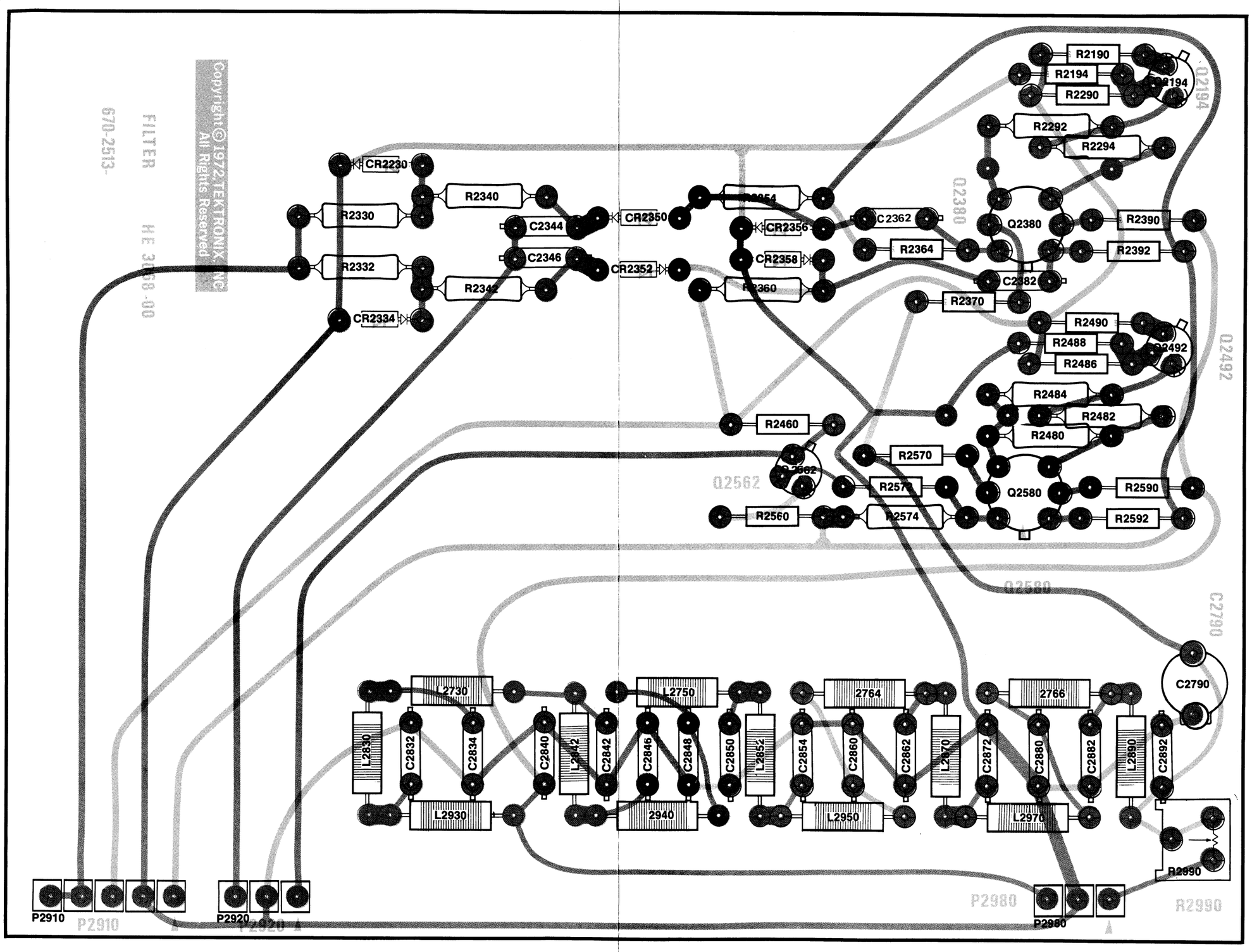

A2 FILTER BOARD

REV. B, APR. 1977

3

PARTS LOCATING CHART

C2334	D-6	CR2230	C-6	Q2194	E-3	R2390	D-4
C2346	B-6	CR2334	C-6	Q2380	D-3	R2392	B-4
C2362	D-5	CR2350	D-6	Q2492	F-5	R2460	E-9
C2382	B-5	CR2352	B-6	Q2562	E-9	R2480	F-5
C2790	A-1	CR2356	D-5	Q2580	E-5	R2482	F-6
C2832	A-8	CR2358	B-5			R2484	F-5
C2834	A-7			R2190	E-3	R2486	G-5
C2840	A-8	L2730	A-7	R2194	E-3	R2488	F-5
C2842	A-7	L2750	A-5	R2290	E-3	R2490	G-5
C2846	A-6	L2764	A-4	R2292	D-3	R2560	D-9
C2848	A-6	L2766	A-2	R2294	D-4	R2570	E-4
C2850	A-5	L2830	A-7	R2330	C-7	R2572	E-7
C2854	A-5	L2842	A-6	R2332	C-7	R2574	D-5
C2860	A-4	L2852	A-5	R2340	D-6	R2590	E-6
C2862	A-4	L2870	A-3	R2342	C-7	R2592	E-6
C2872	A-3	L2890	A-2	R2354	D-5	R2990	A-1
C2880	A-3	L2930	A-8	R2360	C-6		
C2882	A-2	L2940	A-6	R2364	B-3		
C2892	A-2	L2950	A-4	R2370	D-2		
		L2970	A-3				

NOTES:

1. SEE PARTS LIST FOR SEMICONDUCTOR TYPES.

1

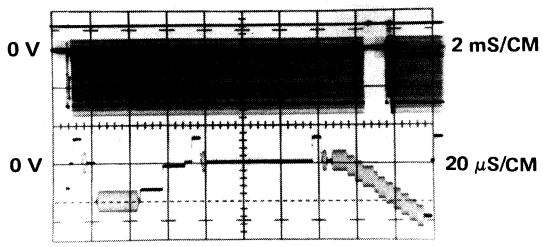

D.T.M. 8.9
10X probe to P2980-3
VOLTS/CM .05

2 AC CPLD

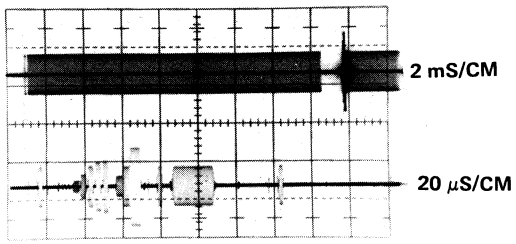

D.T.M. 8.9
10X probe to the emitter of Q2562
VOLTS/CM .1

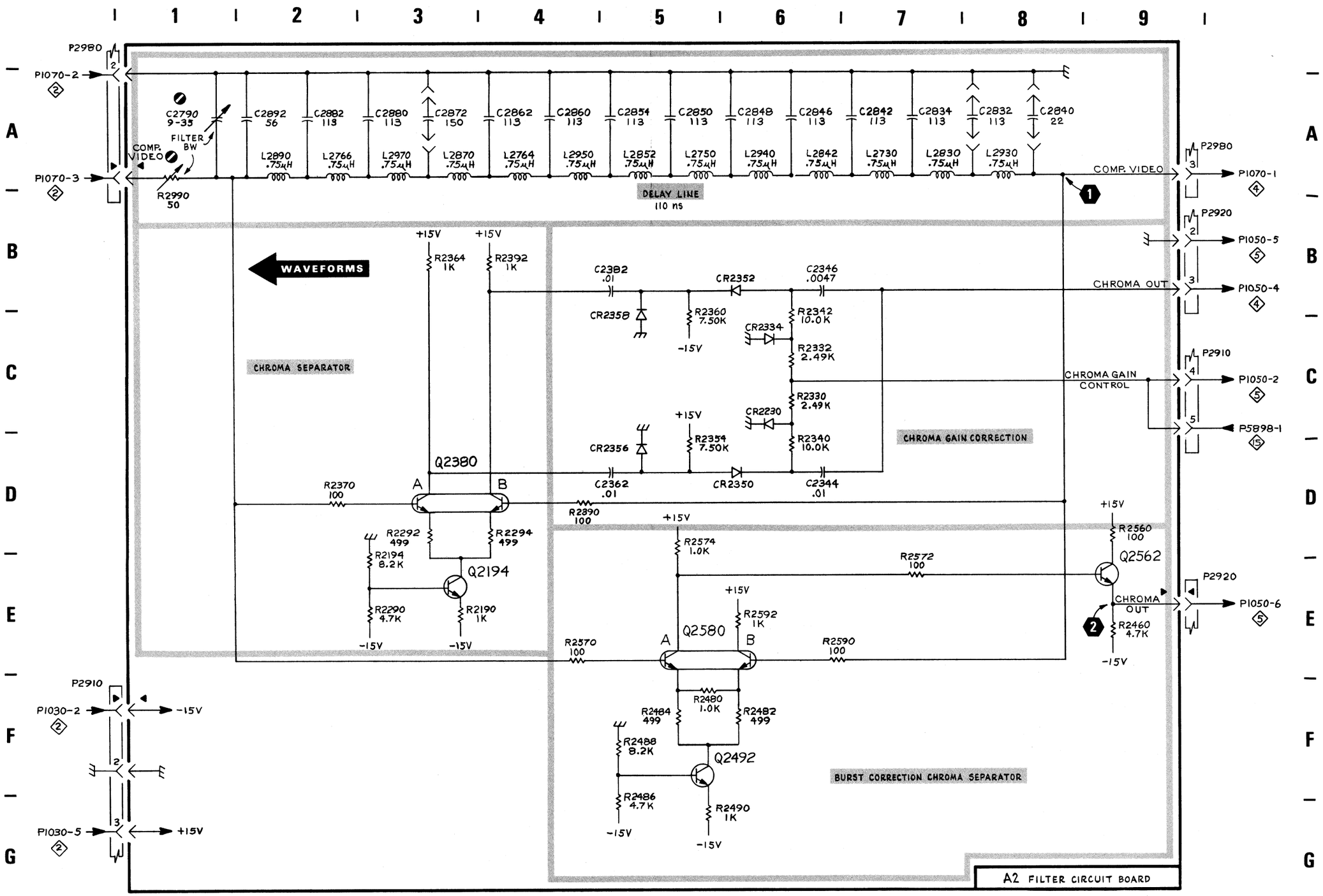
P2980
P1070-2
P1070-3
C2790 9-35
FILTER BW
COMP. VIDEO
R2990 50
C2892 56
C2882 113
C2880 113
C2872 150
C2862 113
C2860 113
C2854 113
C2850 113
C2848 113
C2846 113
C2842 113
C2834 113
C2832 113
C2840 22
L2890 .75μH
L2766 .75μH
L2970 .75μH
L2870 .75μH
L2764 .75μH
L2950 .75μH
L2852 .75μH
L2750 .75μH
L2940 .75μH
L2842 .75μH
L2730 .75μH
L2830 .75μH
L2930 .75μH
DELAY LINE
110 ns
COMP. VIDEO
P2980
P1070-1
P2920
P1050-5
CHROMA OUT
P1050-4
P2910
CHROMA GAIN CONTROL
P1050-2
P5898-1
WAVEFORMS
+15V
R2364 1K
R2392 1K
C2382 .01
CR2352
C2346 .0047
CR2358
R2360 7.50K
-15V
CR2334
R2342 10.0K
R2332 2.49K
CHROMA SEPARATOR
R2330 2.49K
CR2230
CR2356
R2354 7.50K
R2340 10.0K
CHROMA GAIN CORRECTION
Q2380
R2370 100
C2362 .01
CR2350
C2344 .01
R2390 100
R2292 499
R2294 499
R2194 8.2K
Q2194
R2290 4.7K
R2190 1K
R2574 1.0K
R2572 100
R2560 100
Q2562
CHROMA OUT
R2460 4.7K
P2920
P1050-6
R2592 1K
Q2580
R2570 100
R2590 100
R2480 1.0K
R2484 499
R2482 499
R2488 8.2K
Q2492
R2486 4.7K
R2490 1K
BURST CORRECTION CHROMA SEPARATOR
P2910
P1030-2
P1030-5
A2 FILTER CIRCUIT BOARD

4

PARTS LOCATING CHART

C1100	F-2	R1102	F-2	R1542	D-7
C1170	G-6	R1106	E-3	R1544	E-7
C1302	E-2	R1148	A-5	R1552	G-8
C1304	E-3	R1156	G-1	R1554	A-5
C1330	A-6	R1158	G-6	R1560	B-2
C1412	E-4	R1160	E-6	R1640	C-8
C1462	D-3	R1162	D-5	R1654	D-9
C1546	E-7	R1166	F-5	R1656	B-2
C1550	E-8	R1172	G-5	R1657	A-2
C1556	A-5	R1178	G-4	R1658	C-2
C1558	B-3	R1182	G-5	R1659	A-1
C1564	D-2	R1210	F-2	R1660	C-2
C1638	C-8	R1264	G-5	R1748	C-8
C1650	C-8	R1266	G-6	R1750	E-9
C1652	D-9	R1268	B-4	R1752	F-9
C1664	F-7	R1270	D-4	R1754	D-9
C1850	D-9	R1272	D-4	R1756	G-8
CR1104	F-3	R1274	G-5	R1758	C-2
CR1202	F-1	R1276	B-5	R1766	G-7
CR1204	F-2	R1332	A-6	R1850	D-9
CR1206	E-1	R1334	A-6	R1852	D-9
CR1300	E-2	R1336	A-6	R1860	C-1
CR1328	A-6	R1356	D-6	R1864	F-8
CR1448	D-7	R1358	D-4		
		R1378	B-5	U1360	C-4
L1306	E-3	R1442	D-6	U1666B	G-7
L1510	E-4	R1444	E-5		
L1560	D-2	R1446	D-7		
		R1450	D-8		
Q1164	G-6	R1454	E-7		
Q1168	G-5	R1456	E-8		
Q1212	E-2	R1458	D-7		
Q1260	B-5	R1460	C-3		
Q1262	D-3	R1464	A-5		
Q1274	G-5	R1466	D-3		
Q1340	A-6	R1468	D-3		
Q1452A	D-6	R1470	D-3		
Q1452B	D-7	R1500	E-2		
Q1471	C-2	R1508	E-4		
Q1642	D-8	R1510	E-4		
Q1760	C-1	R1511	E-5		
Q1762	F-8	R1513	E-5		

NOTES:

1. SEE PARTS LIST FOR SEMICONDUCTOR TYPES
2. U1666: PIN 8 IS CONNECTED TO +15 V, PIN 4 IS CONNECTED TO –15 V.

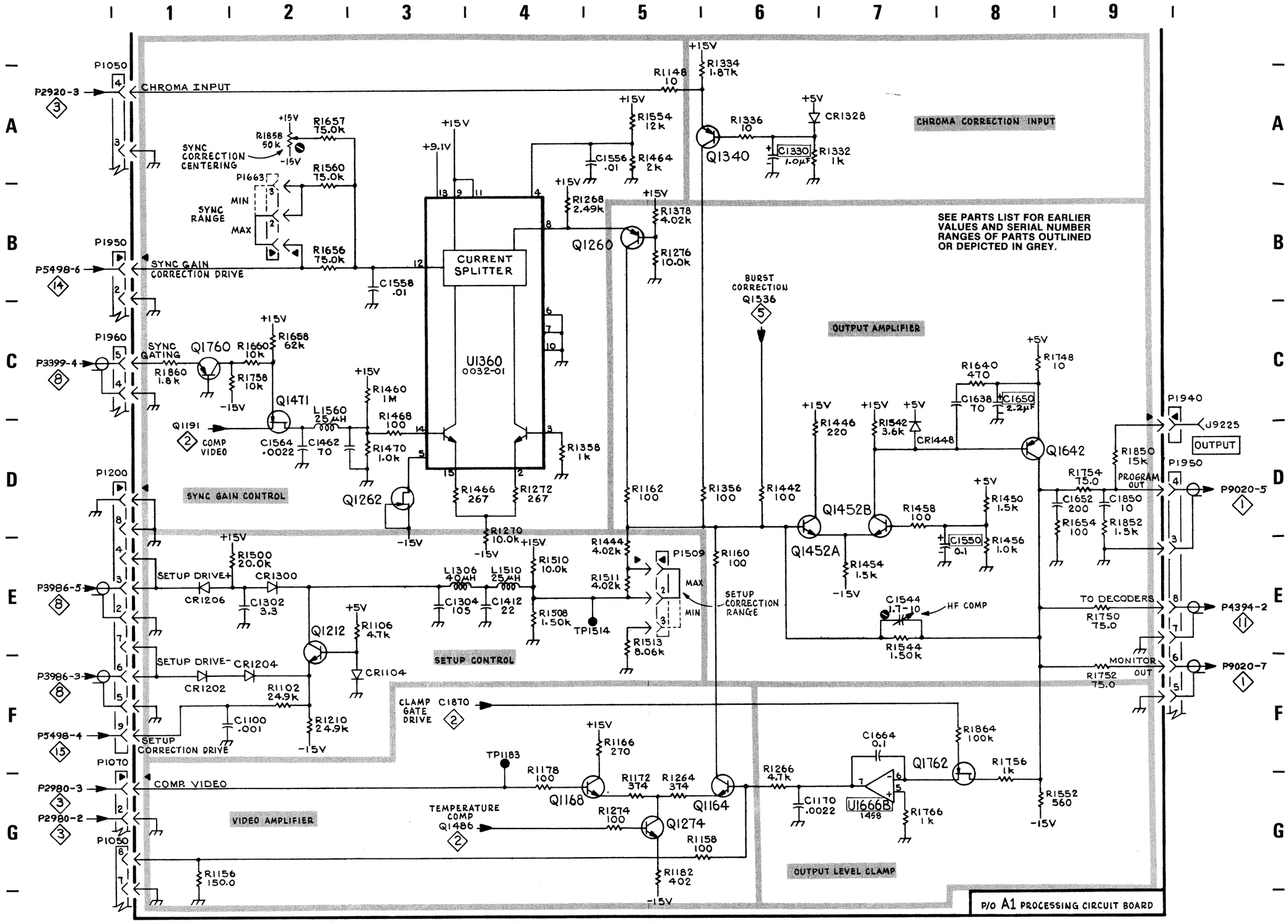
CHROMA INPUT
P1050
P2920-3
SYNC CORRECTION CENTERING
R1858 50k
R1657 75.0k
R1560 75.0k
P1663
MIN
SYNC RANGE
MAX
R1656 75.0k
P1950
P5498-6
SYNC GAIN CORRECTION DRIVE
C1558 .01
CURRENT SPLITTER
U1360 0032-01
P1960
P3399-4
SYNC GATING
R1860 1.8k
Q1760
R1660 10k
R1658 62k
R1758 10k
Q1471
L1560 25μH
Q1191
COMP VIDEO
C1564 .0022
C1462 70
R1460 1M
R1468 100
R1470 1.0k
Q1262
R1466 267
R1272 267
R1358 1k
SYNC GAIN CONTROL
P1200
P3986-5
SETUP DRIVE+
R1500 20.0k
CR1300
CR1206
C1302 3.3
Q1212
R1106 4.7k
CR1104
P3986-3
SETUP DRIVE-
CR1204
CR1202
R1102 24.9k
C1100 .001
R1210 24.9k
P5498-4
SETUP CORRECTION DRIVE
L1306 40μH
L1510 25μH
C1304 105
C1412 22
R1510 10.0k
R1508 1.50k
TP1514
R1444 4.02k
R1511 4.02k
P1509
R1513 8.06k
SETUP CONTROL
R1148 10
R1334 1.87k
R1554 12k
C1556 .01
R1464 2k
R1336 10
CR1328
Q1340
C1330 1.0μF
R1332 1k
CHROMA CORRECTION INPUT
R1268 2.49k
R1378 4.02k
Q1260
R1276 10.0k
SEE PARTS LIST FOR EARLIER VALUES AND SERIAL NUMBER RANGES OF PARTS OUTLINED OR DEPICTED IN GREY.
BURST CORRECTION Q1536
OUTPUT AMPLIFIER
R1640 470
R1748 10
C1638 70
C1650 2.2μF
R1446 220
R1542 3.6k
CR1448
Q1642
R1850 15k
P1940
J9225
OUTPUT
P1950
R1754 75.0
PROGRAM OUT
P9020-5
C1652 200
C1850 10
R1654 100
R1852 1.5k
R1162 100
R1356 100
R1442 100
Q1452B
R1458 100
R1450 1.5k
C1550 0.1
R1456 1.0k
Q1452A
R1454 1.5k
R1160 100
SETUP CORRECTION RANGE
C1544 1.7-10
HF COMP
R1544 1.50k
TO DECODERS
R1750 75.0
P4394-2
MONITOR OUT
R1752 75.0
P9020-7
CLAMP GATE DRIVE C1870
P1070
P2980-3
P2980-2
COMP. VIDEO
TP1183
R1178 100
R1166 270
Q1168
R1172 374
R1264 374
Q1164
TEMPERATURE COMP Q1486
R1274 100
Q1274
R1158 100
R1182 402
VIDEO AMPLIFIER
R1156 150.0
R1266 4.7k
C1664 0.1
C1170 .0022
U1666B 1458
R1766 1k
Q1762
R1864 100k
R1756 1k
R1552 560
OUTPUT LEVEL CLAMP
P/O A1 PROCESSING CIRCUIT BOARD

5

PARTS LOCATING CHART

C1132	E-1	CR1515	D-8	R1216	F-4	R1609	E-8
C1144	G-4	CR1518	B-3	R1225	F-4	R1613	E-8
C1232	F-2	CR1528	C-3	R1230	E-1	R1616	G-6
C1321	F-4	CR1708	F-8	R1231	F-3	R1618	F-6
C1326	C-1	CR1714	F-8	R1232	F-4	R1620	G-6
C1332	B-2	CR1732	C-8	R1236	F-2	R1626	C-5
C1331	F-3	CR1738	B-8	R1237	F-1	R1634	G-9
C1336	F-2	CR1802	E-7	R1312	F-5	R1700	E-7
C1436	C-3	CR1804	F-7	R1325	F-4	R1704	F-7
C1500	E-6	CR1814	G-7	R1331	F-3	R1706	F-9
C1524	C-4	CR1816	G-7	R1339	C-2	R1710	F-9
C1604	E-6	CR1822	C-7	R1337	F-2	R1712	F-9
C1614	G-6	CR1824	C-7	R1338	F-3	R1716	F-9
C1616	G-6	CR1832	A-7	R1412	F-5	R1720	G-7
C1622	C-6	CR1834	B-7	R1428	D-8	R1726	C-6
C1624	C-5			R1430	C-2	R1728	C-7
C1636	B-5	L1628	C-6	R1432	C-3	R1730	C-8
C1722	G-7	L1632	B-6	R1438	B-2	R1734	C-8
C1724	C-6			R1440	B-3	R1736	B-8
C1742	B-6	Q1232	F-4	R1509	D-8	R1740	B-8
C1800	E-7	Q1234	E-2	R1514	D-8	R1744	B-6
C1808	E-9	Q1315	F-5	R1516	D-7	R1746	B-6
C1810	F-8	Q1316	F-3	R1520	C-3	R1806	E-7
C1812	G-9	Q1434	C-2	R1522	C-4	R1818	G-7
C1820	C-9	Q1526	C-4	R1530	B-4	R1826	C-7
C1828	C-7	Q1536	D-9	R1532	B-5	R1836	B-7
C1830	B-9	Q1630	C-5	R1534	B-5		
		Q1702	E-7	R1600	F-6		
CR1130	E-1	Q1718	G-6	R1602	E-6		
CR1330	F-4			R1606	E-6		
CR1332	F-3	R1134	E-1				

NOTE:

SEE PARTS LIST FOR SEMICONDUCTOR TYPES.

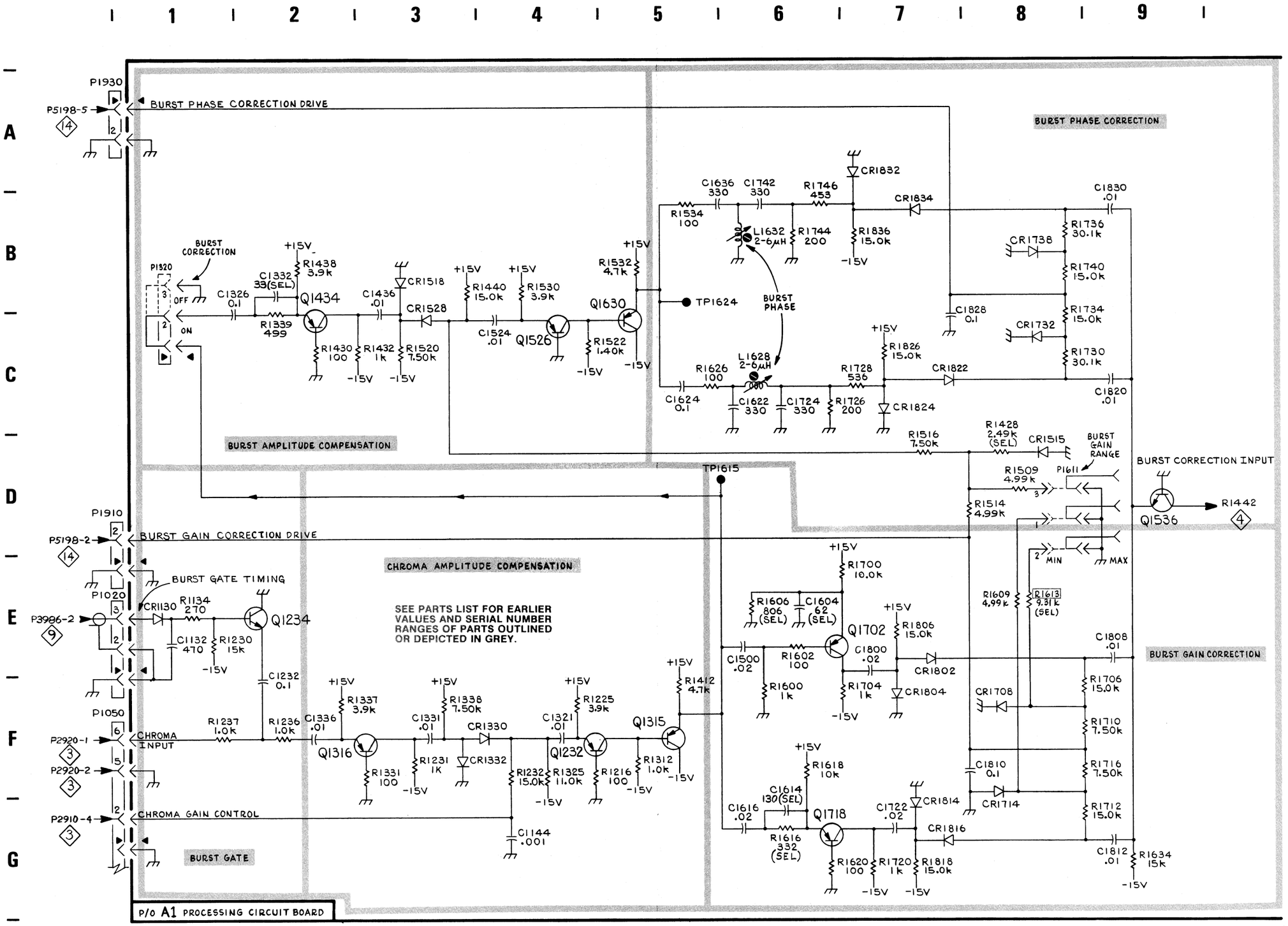
BURST PHASE CORRECTION DRIVE
P1930
P5198-5
BURST PHASE CORRECTION
BURST CORRECTION
P1920
OFF
ON
C1326 0.1
C1332 33(SEL)
R1339 499
R1438 3.9k
Q1434
R1430 100
R1432 1k
CR1518
CR1528
C1436 .01
R1520 7.50k
R1440 15.0k
R1530 3.9k
C1524 .01
Q1526
R1522 1.40k
R1532 4.7k
Q1630
TP1624
BURST PHASE
L1632 2-6μH
L1628 2-6μH
C1636 330
C1742 330
R1746 453
CR1832
CR1834
R1534 100
R1744 200
R1836 15.0k
C1830 .01
R1736 30.1k
CR1738
R1740 15.0k
R1734 15.0k
CR1732
R1730 30.1k
C1828 0.1
R1826 15.0k
R1626 100
R1728 536
CR1822
C1624 0.1
C1622 330
C1724 330
R1726 200
CR1824
C1820 .01
BURST AMPLITUDE COMPENSATION
R1516 7.50k
R1428 2.49k (SEL)
CR1515
BURST GAIN RANGE
P1611
R1509 4.99k
R1514 4.99k
BURST CORRECTION INPUT
Q1536
R1442
TP1615
P1910
P5198-2
BURST GAIN CORRECTION DRIVE
BURST GATE TIMING
P1020
P3986-2
CR1130
R1134 270
Q1234
C1132 470
R1230 15k
C1232 0.1
CHROMA AMPLITUDE COMPENSATION
SEE PARTS LIST FOR EARLIER VALUES AND SERIAL NUMBER RANGES OF PARTS OUTLINED OR DEPICTED IN GREY.
P1050
P2920-1
P2920-2
P2910-4
CHROMA INPUT
CHROMA GAIN CONTROL
R1237 1.0k
R1236 1.0k
C1336 .01
R1337 3.9k
Q1316
R1331 100
C1331 .01
R1338 7.50k
R1231 1k
CR1330
CR1332
C1321 .01
R1225 3.9k
Q1232
R1232 15.0k
R1325 11.0k
R1216 100
R1412 4.7k
Q1315
R1312 1.0k
C1144 .001
BURST GATE
R1700 10.0k
R1606 806 (SEL)
C1604 62 (SEL)
Q1702
R1806 15.0k
C1500 .02
R1602 100
C1800 .02
CR1802
R1600 1k
R1704 1k
CR1804
R1609 4.99k
R1613 9.31k (SEL)
MIN
MAX
C1808 .01
BURST GAIN CORRECTION
R1706 15.0k
CR1708
R1710 7.50k
R1618 10k
C1614 130(SEL)
C1616 .02
Q1718
R1616 332 (SEL)
C1722 .02
CR1814
CR1816
C1810 0.1
CR1714
R1716 7.50k
R1712 15.0k
C1812 .01
R1634 15k
R1620 100
R1720 1k
R1818 15.0k
P/O A1 PROCESSING CIRCUIT BOARD
REV. C, APR 1977

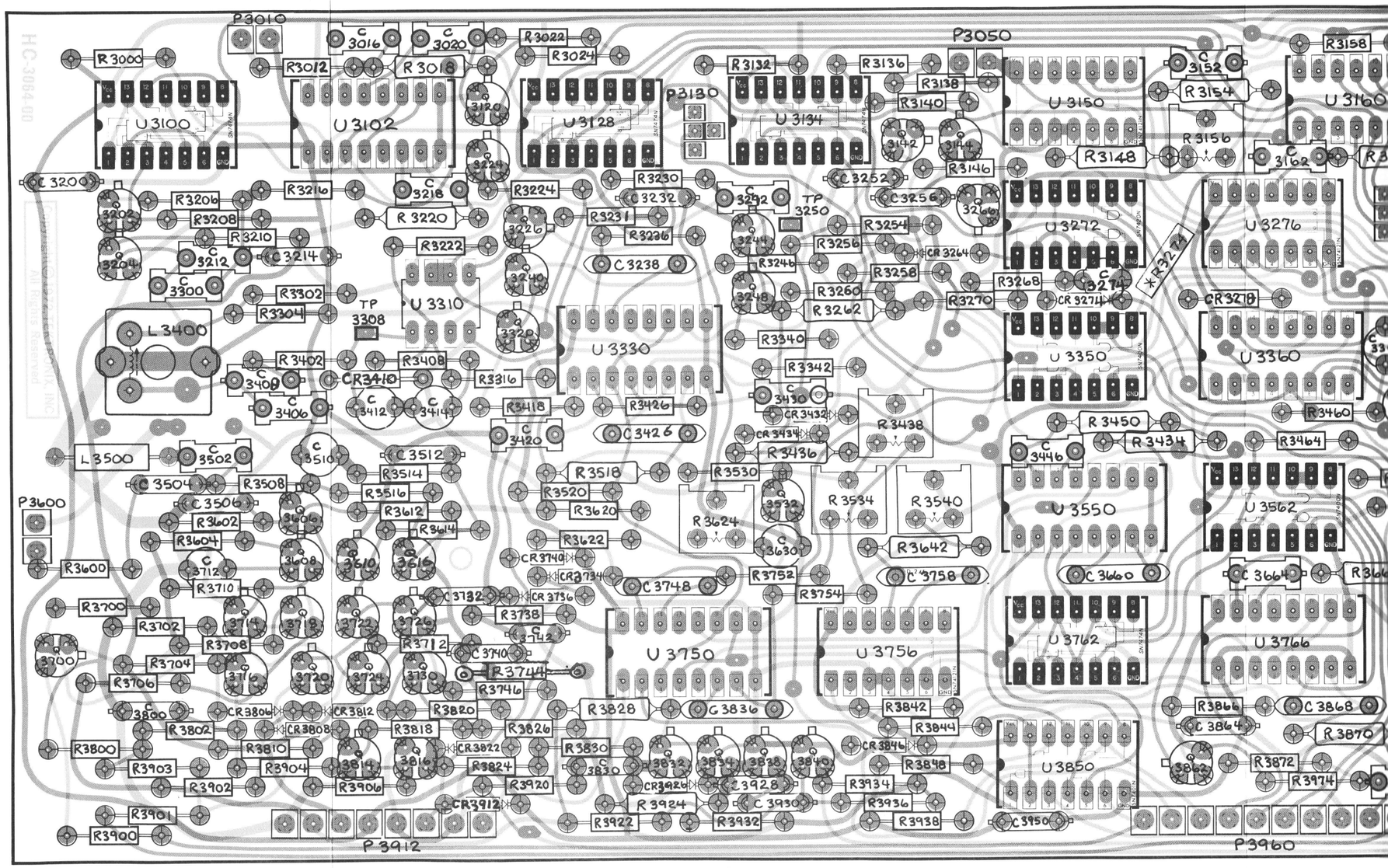

REV. C, APR. 1977

*See Parts List for serial number ranges.

A3 TIMING CIRCUIT BOARD

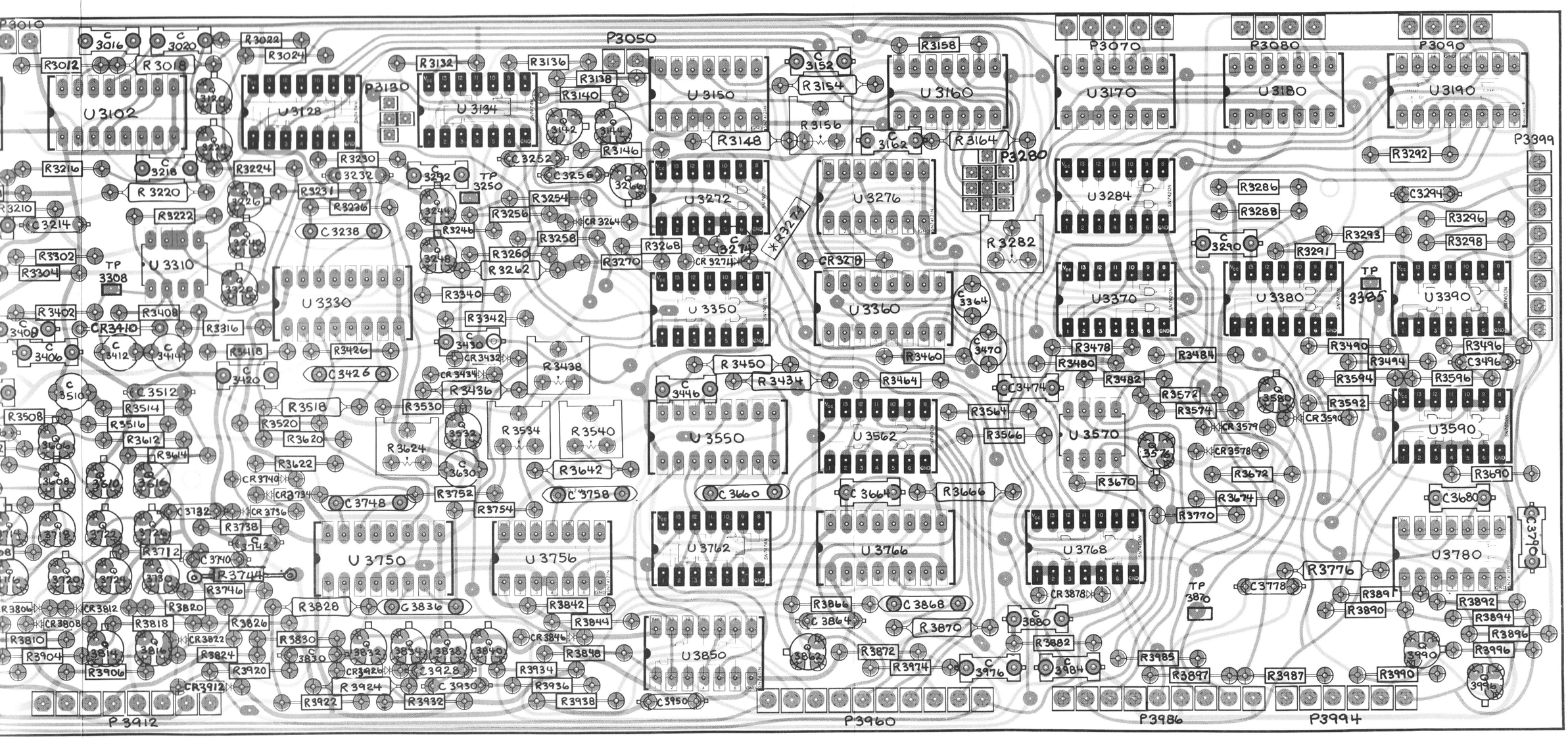

See Parts List for
rial number ranges.

A3 TIMING CIRCUIT BOARD

6

PARTS LOCATING CHART

C3502	F-1
C3504	F-1
C3506	F-2
C3510	E-3
C3512	E-2
C3712	F-6
C3732	E-5
C3740	B-6
C3742	C-8
C3800	C-5
CR3740	C-8
CR3806	C-4
CR3808	B-4
CR3812	A-4
CR3822	A-7
CR3912	A-7
L3500	F-1
Q3606	F-2
Q3608	F-3
Q3610	F-3
Q3616	E-2
Q3700	C-4
Q3714	G-4
Q3716	C-5
Q3718	G-5
Q3720	D-4
Q3722	E-3
Q3724	B-4
Q3726	D-5
Q3730	A-5
Q3814	B-5
Q3816	B-7
R3508	F-2
R3514	E-3
R3516	E-2
R3600	F-2
R3602	F-2
R3604	F-3
R3612	F-2
R3614	E-3
R3700	C-4
R3702	G-4
R3704	B-5
R3706	F-7
R3708	G-5
R3710	G-3
R3712	B-3
R3738	C-8
R3744	E-6
R3746	A-6
R3800	D-6
R3802	D-6
R3810	B-5
R3818	B-6
R3820	A-5
R3824	A-7
R3826	A-6
R3900	C-7
R3901	D-4
R3902	B-4
R3903	D-4
R3904	C-6
R3906	B-7

NOTE:

SEE PARTS LIST FOR SEMICONDUCTOR TYPES.

1 AC CPLD

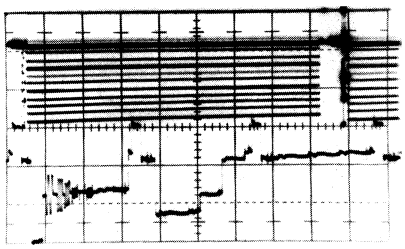

D.T.M. 8.9
10X probe to base Q3724
VOLTS/CM .1

2

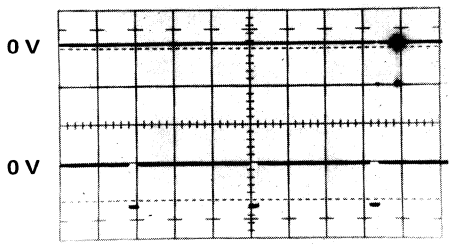

D.T.M. 8.9
10X probe to collector Q3816
VOLTS/CM .5

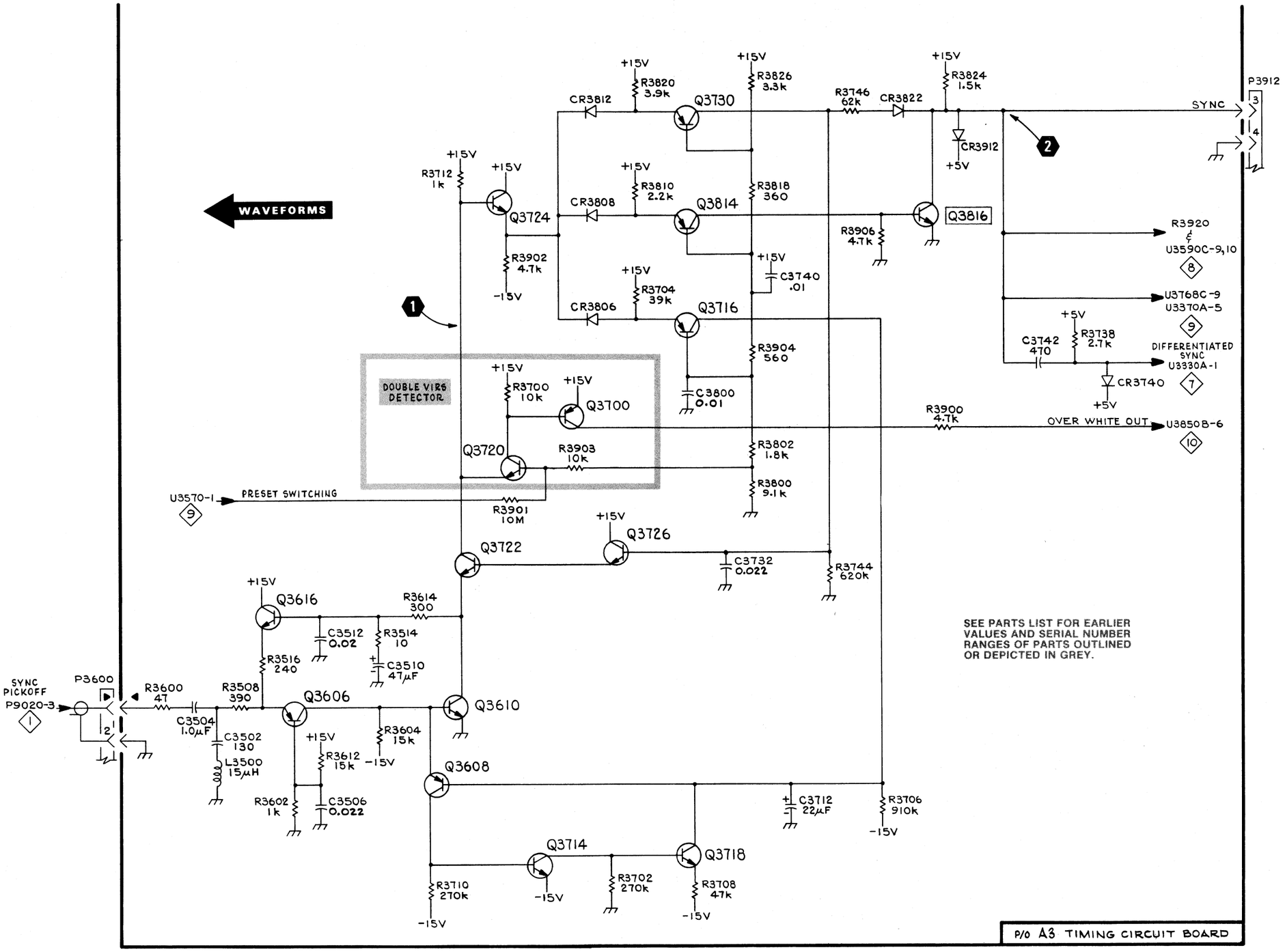
WAVEFORMS
DOUBLE VIRS DETECTOR
SEE PARTS LIST FOR EARLIER VALUES AND SERIAL NUMBER RANGES OF PARTS OUTLINED OR DEPICTED IN GREY.
P/O A3 TIMING CIRCUIT BOARD
SYNC
P3912
R3920 & U3590C-9,10
U3768C-9 U3370A-5
DIFFERENTIATED SYNC U3330A-1
OVER WHITE OUT U3850B-6
U3570-1 PRESET SWITCHING
SYNC PICKOFF P9020-3
P3600
Q3730
Q3724
Q3814
Q3816
Q3716
Q3700
Q3720
Q3722
Q3726
Q3616
Q3606
Q3610
Q3608
Q3714
Q3718
CR3812
CR3808
CR3806
CR3822
CR3912
CR3740
R3820 3.9k
R3826 3.3k
R3746 62k
R3824 1.5k
R3712 1k
R3810 2.2k
R3818 360
R3902 4.7k
R3906 4.7k
R3704 39k
C3740 .01
R3904 560
C3800 0.01
R3700 10k
R3903 10k
R3900 4.7k
R3802 1.8k
R3800 9.1k
R3901 10M
C3732 0.022
R3744 620k
R3614 300
C3512 0.02
R3514 10
C3510 47µF
R3516 240
R3600 47
R3508 390
C3504 1.0µF
C3502 130
L3500 15µH
R3604 15k
R3612 15k
R3602 1k
C3506 0.022
C3742 470
R3738 2.7k
C3712 22µF
R3706 910k
R3710 270k
R3702 270k
R3708 47k
+15V
-15V
+5V

7

PARTS LOCATING CHART

C3016	C-8	CR3410	B-7	R3012	C-9	R3256	E-2	U3102A	D-8
C3020	E-6	CR3432	B-2	R3018	C-8	R3260	A-3	U3102B	D-8
C3212	A-8	CR3434	B-3	R3022	D-5	R3262	B-3	U3134A	G-5
C3214	A-9			R3024	A-4	R3270	F-4	U3134B	F-2
C3218	C-8	L3400	B-8	R3136	F-2	R3302	A-8	U3272A	F-5
C3232	B-5			R3138	G-2	R3304	B-8	U3310A	B-7
C3238	B-1	Q3120	E-5	R3140	G-3	R3316	A-6	U3310B	B-5
C3252	G-3	Q3142	F-3	R3146	F-3	R3340	B-3	U3330A	B-1
C3256	F-4	Q3144	F-3	R3206	A-9	R3342	B-3	U3330B	B-2
C3292	B-4	Q3202	A-9	R3208	C-9	R3402	B-7		
C3300	A-8	Q3204	B-9	R3210	A-9	R3408	A-7		
C3406	B-8	Q3224	E-4	R3216	A-9	R3418	A-6		
C3408	B-8	Q3226	B-5	R3220	C-8	R3426	C-1		
C3412	A-7	Q3240	G-6	R3222	B-6	R3436	B-3		
C3414	A-7	Q3244	B-4	R3224	E-3	R3518	A-2		
C3420	C-1	Q3248	A-3	R3230	A-4	R3624	A-1		
C3426	B-2	Q3266	F-4	R3231	A-5	R9210	C-10		
C3430	E-2	Q3320	A-6	R3236	B-1				
				R3246	G-6	U3100A	D-6		
CR3264	F-4	R3000	C-6	R3254	F-2	U3100B	D-7		

NOTES:

1. SEE PARTS LIST FOR SEMICONDUCTOR TYPES.
2. U3310: PIN 8 IS CONNECTED TO +15 V, PIN 4 IS CONNECTED TO –15 V.
3. U3102: PIN 16 IS CONNECTED TO +5 V, PIN 8 IS CONNECTED TO GROUND.
4. ALL OTHER IC's: PIN 14 IS CONNECTED TO +5 V, PIN 7 IS CONNECTED TO GROUND.

1

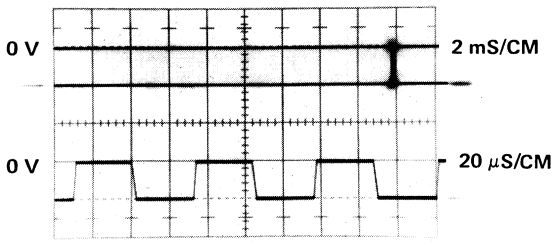

D.T.M. 8.9
10X probe to collector Q3244
VOLTS/CM .5

2

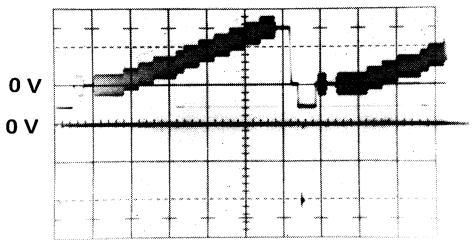

CH 1, 1440 PROGRAM OUT

CH 2, 10X probe to U3102 pin 12

VOLTS/CM .2

1A1 in ALT mode

VOLTS/CM .5

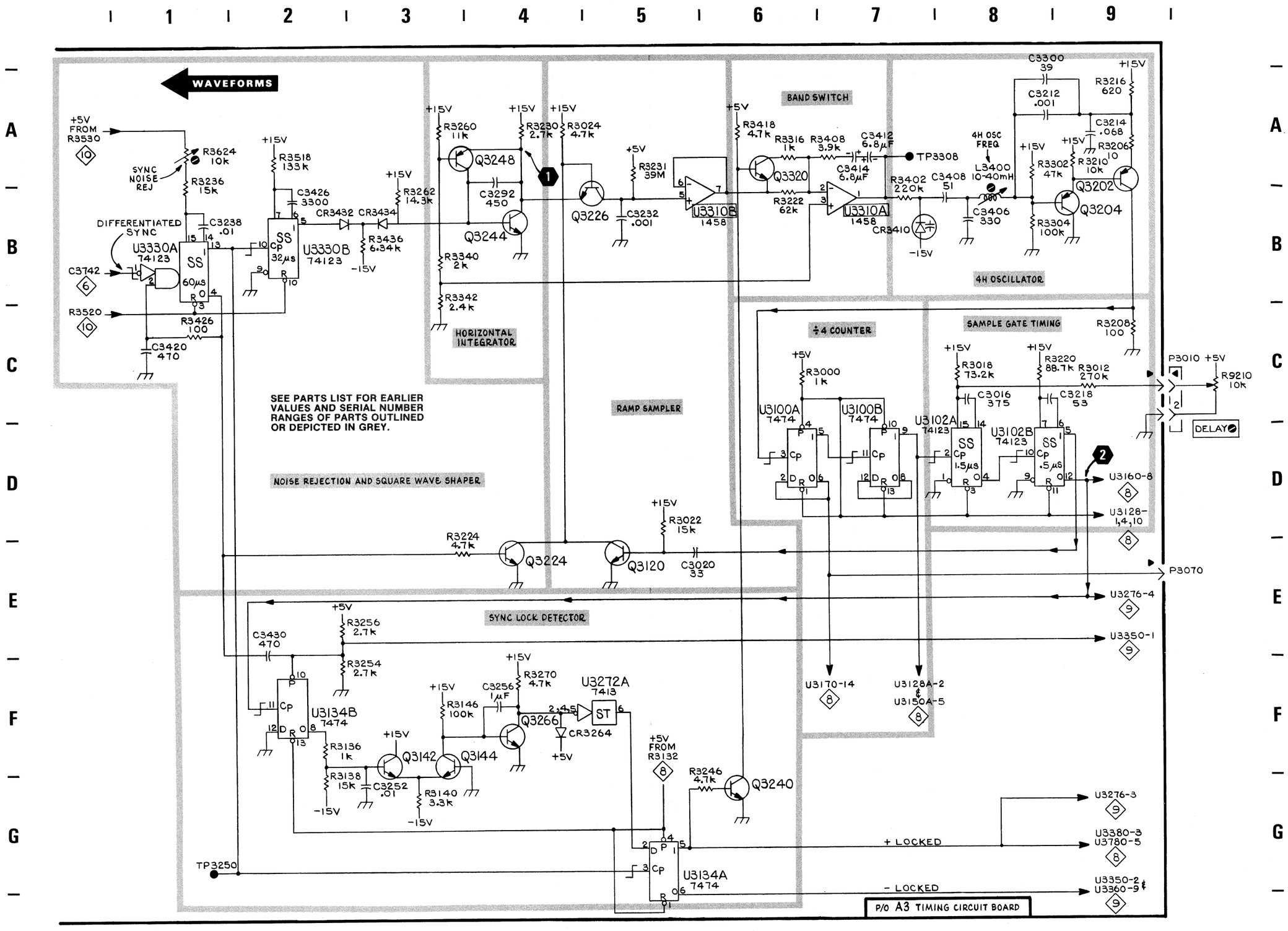
WAVEFORMS
+5V FROM R3530
R3624 10k
SYNC NOISE REJ
R3236 15k
DIFFERENTIATED SYNC
C3238 .01
U3330A 74123
C3742
R3520
R3426 100
C3420 470
R3518 133k
C3426 3300
U3330B 74123
CR3432
CR3434
R3262 14.3k
R3436 6.34k
NOISE REJECTION AND SQUARE WAVE SHAPER
R3260 11k
Q3248
C3292 450
Q3244
R3340 2k
R3342 2.4k
HORIZONTAL INTEGRATOR
R3230 2.7k
R3024 4.7k
Q3226
R3231 39M
C3232 .001
U3310B 1458
RAMP SAMPLER
R3418 4.7k
R3316 1k
R3408 3.9k
Q3320
R3222 62k
C3412 6.8µF
C3414 6.8µF
TP3308
U3310A 1458
BAND SWITCH
R3402 220k
C3408 51
CR3410
4H OSC FREQ
L3400 10-40mH
C3406 330
C3300 39
C3212 .001
R3216 620
C3214 .068
R3206 10
R3302 47k
R3210 10k
Q3202
Q3204
R3304 100k
4H OSCILLATOR
÷4 COUNTER
R3000 1k
U3100A 7474
U3100B 7474
SAMPLE GATE TIMING
R3018 73.2k
R3220 88.7k
R3012 270k
C3016 375
C3218 53
U3102A 74123
U3102B 74123
R3208 100
P3010
R9210 10k
DELAY
U3160-8
U3128-1,4,10
P3070
U3276-4
U3350-1
U3170-14
U3128A-2 & U3150A-5
R3224 4.7k
Q3224
Q3120
R3022 15k
C3020 33
SYNC LOCK DETECTOR
R3256 2.7k
C3430 470
R3254 2.7k
U3134B 7474
R3136 1k
R3138 15k
C3252 .01
Q3142
Q3144
R3146 100k
C3256 1µF
R3270 4.7k
Q3266
U3272A 7413
CR3264
R3140 3.3k
TP3250
+5V FROM R3132
R3246 4.7k
Q3240
U3134A 7474
U3276-3
+ LOCKED
U3380-3 U3780-5
- LOCKED
U3350-2 U3360-9
P/O A3 TIMING CIRCUIT BOARD
SEE PARTS LIST FOR EARLIER VALUES AND SERIAL NUMBER RANGES OF PARTS OUTLINED OR DEPICTED IN GREY.

PARTS LOCATING CHART

C3152	A-6	R3132	G-5	R3922	A-4	U3284B	E-4
C3290	F-7	R3148	B-4	R3924	A-3	U3350B	G-7
C3474	B-5	R3154	A-6	R3932	A-3	U3350C	E-6
C3496	A-7	R3156	A-6	R3934	A-4	U3370B	E-7
C3680	A-7	R3286	F-7	R3936	A-4	U3380A & U3380C	E-8
C3790	B-7	R3288	F-7			U3380B	E-8
C3830	A-2	R3292	B-2	U3128A	G-3	U3390B & U3390C	A-8
C3928	A-3	R3296	A-8	U3128B	G-2	U3390D	A-9
C3930	A-4	R3298	B-8	U3150	B-6	U3590C	A-7
		R3496	A-8	U3160	F-5	U3768A	A-5
CR3846	A-4	R3564	B-4	U3170A	C-1	U3768B	F-9
CR3926	B-2	R3566	B-4	U3170B	C-4	U3768D	E-4
		R3596	A-8	U3180A	C-2	U3780	B-7
Q3832	A-2	R3776	A-7	U3180B	C-4		
Q3834	A-3	R3828	B-2	U3190A	C-2		
Q3838	A-3	R3830	A-2	U3190B	C-3		
Q3840	A-4	R3920	A-1	U3284A	E-5		

NOTES:

1. SEE PARTS LIST FOR SEMICONDUCTOR TYPES.
2. U3170 & U3180: PIN 5 IS CONNECTED TO +5 VOLTS, PIN 10 IS CONNECTED TO GROUND.
3. U3190: PIN 5 IS CONNECTED TO +5 VOLTS, PIN 13 IS CONNECTED TO GROUND.
4. ALL OTHER IC's: PIN 14 IS CONNECTED TO +5 VOLTS, PIN 7 IS CONNECTED TO GROUND.

1

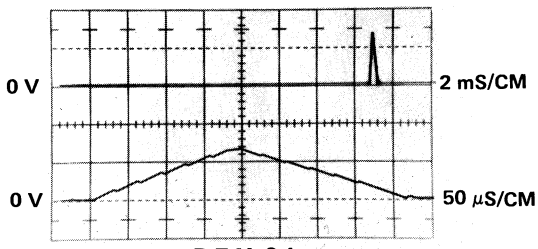

D.T.M. 8.4
10X probe to collector of Q3838
VOLTS/CM .5 VOLTS/cm .5

2

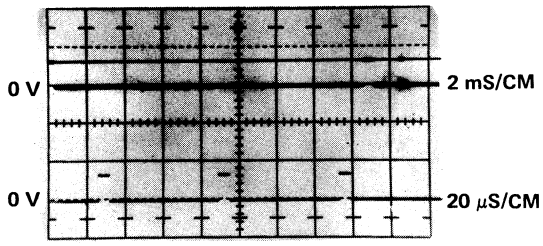

D.T.M. 9.3
10X probe to P3399-4
VOLTS/CM .5

3

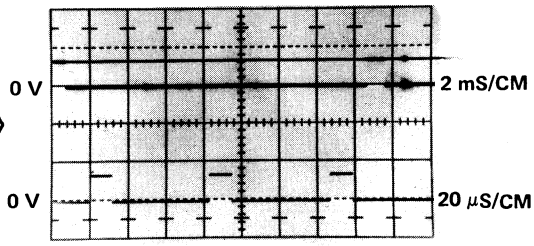

D.T.M. 9.3
10X probe to P3986-3
VOLTS/CM .5

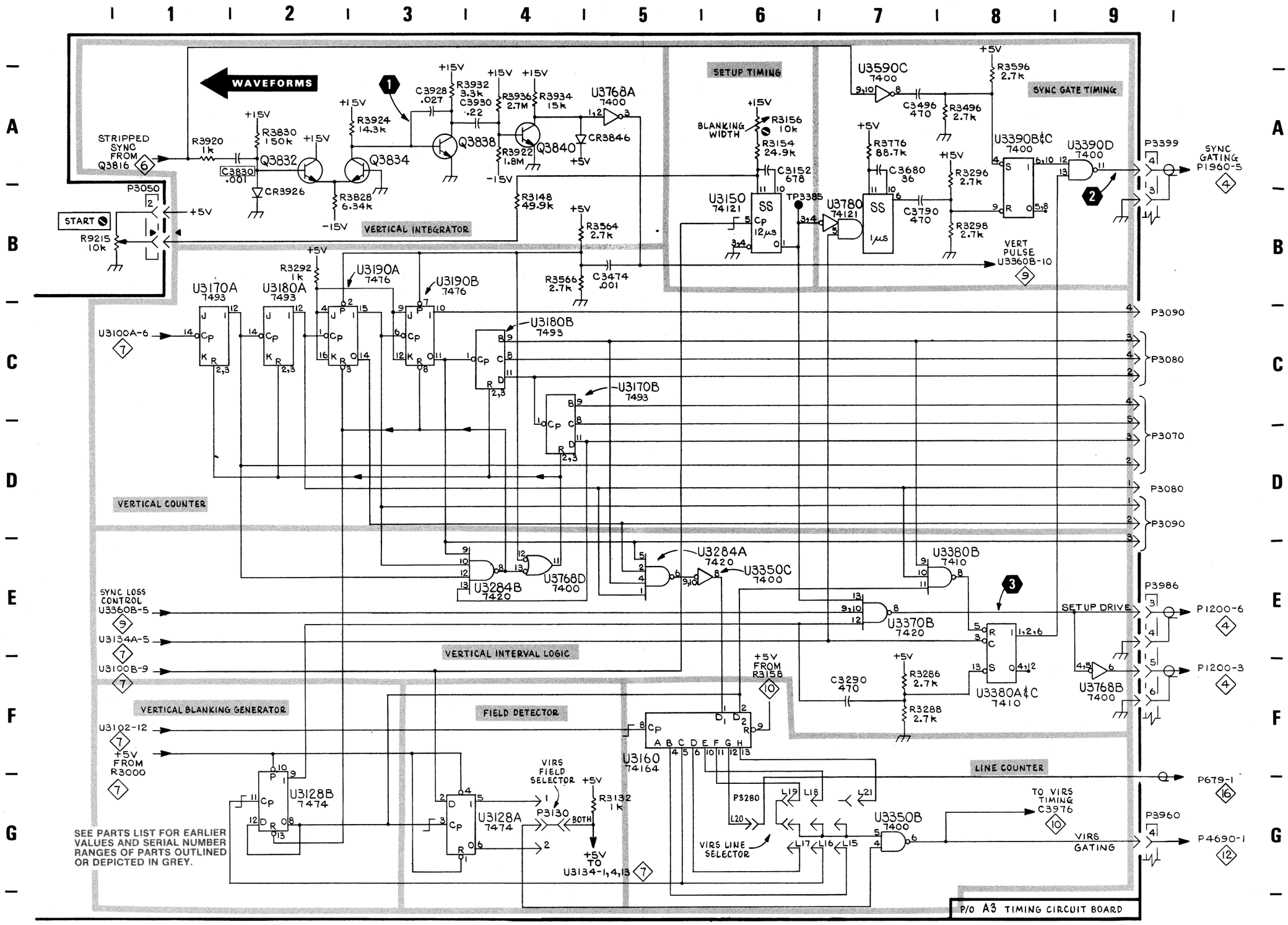
WAVEFORMS
STRIPPED SYNC FROM Q3816
START
VERTICAL INTEGRATOR
SETUP TIMING
SYNC GATE TIMING
BLANKING WIDTH
SYNC GATING P1960-5
VERT PULSE U3360B-10
VERTICAL COUNTER
U3100A-6
SYNC LOSS CONTROL U3360B-5
U3134A-5
U3100B-9
VERTICAL INTERVAL LOGIC
VERTICAL BLANKING GENERATOR
U3102-12
+5V FROM R3000
FIELD DETECTOR
+5V FROM R3158
VIRS FIELD SELECTOR
VIRS LINE SELECTOR
LINE COUNTER
TO VIRS TIMING C3976
VIRS GATING
SETUP DRIVE
+5V TO U3134-1,4,13
SEE PARTS LIST FOR EARLIER VALUES AND SERIAL NUMBER RANGES OF PARTS OUTLINED OR DEPICTED IN GREY.
P/O A3 TIMING CIRCUIT BOARD

9

PARTS LOCATING CHART

C3162	C-4	R3164	B-4	R3891	E-7
C3274	F-4	R3258	B-3	R3892	E-7
C3470	D-3	R3268	B-4	R3894	F-8
C3880	C-8	R3274	F-5	R3896	E-7
C3984	G-6	R3282	B-4	R3897	A-5
		R3291	D-7	R3985	G-8
CR3274	F-4	R3293	D-5	R3987	A-7
CR3278	F-4	R3478	F-3	R3990	F-8
CR3578	G-2	R3480	D-3	R3996	E-7
CR3579	B-7	R3482	C-8		
CR3590	B-6	R3484	B-6	U3272B	B-5
CR3878	C-7	R3490	B-5	U3276	C-4
		R3572	B-7	U3350A	C-3
DS9250	G-10	R3574	B-7	U3360B	D-3
DS9260	A-10	R3594	A-6	U3370A	C-7
DS9280	G-10	R3670	B-8	U3390A	B-6
		R3672	G-2	U3562C	E-6
Q3576	G-3	R3674	B-7	U3570A	B-8
Q3580	B-5	R3690	G-8	U3570B	B-8
Q3990	F-8	R3770	G-3	U3590A	F-7
Q3996	E-7	R3882	C-8	U3590B	F-8
		R3890	F-7	U3768C	C-7

NOTES:

1. SEE PARTS LIST FOR SEMICONDUCTOR TYPES.
2. U3570: PIN 8 IS CONNECTED TO +15 V, PIN 4 IS CONNECTED TO –15 V.
3. U3360: PIN 16 IS CONNECTED TO +5 V, PIN 8 IS CONNECTED TO GROUND.
4. ALL OTHER IC's: PIN 14 IS CONNECTED TO +5 V, PIN 7 IS CONNECTED TO GROUND.

1

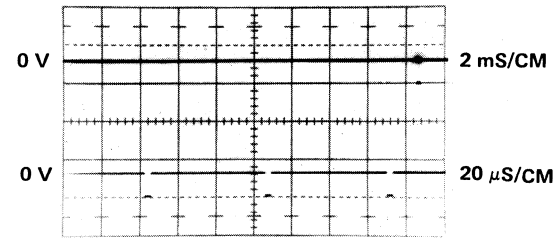

D.T.M. 9.3
10X probe to P3986-2
VOLTS/CM .5

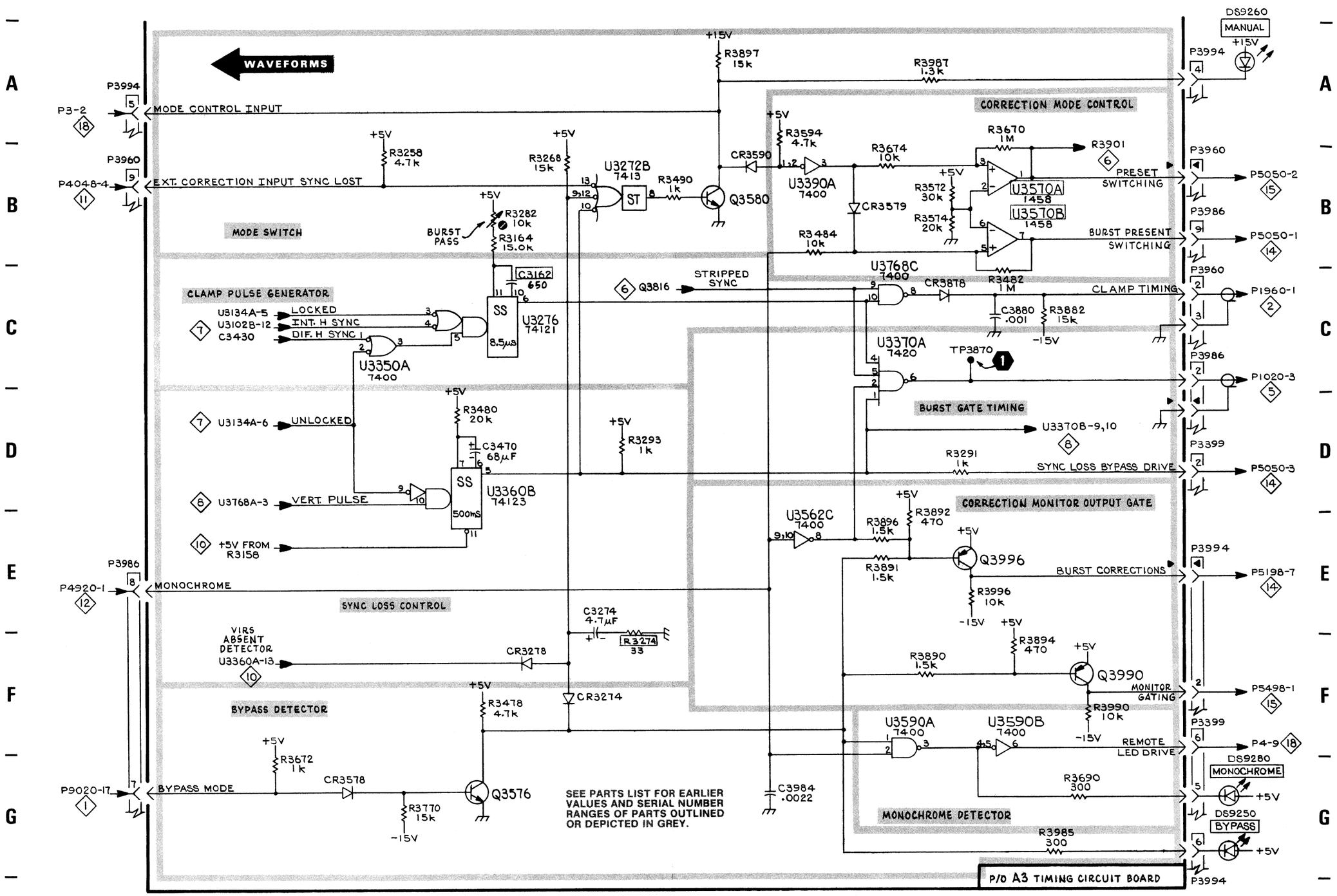
WAVEFORMS
MODE CONTROL INPUT
EXT. CORRECTION INPUT SYNC LOST
MODE SWITCH
CLAMP PULSE GENERATOR
LOCKED
INT. H SYNC
DIF. H SYNC 1
UNLOCKED
VERT. PULSE
+5V FROM R3158
SYNC LOSS CONTROL
MONOCHROME
VIRS ABSENT DETECTOR
BYPASS DETECTOR
BYPASS MODE
STRIPPED SYNC
CORRECTION MODE CONTROL
PRESET SWITCHING
BURST PRESENT SWITCHING
CLAMP TIMING
BURST GATE TIMING
SYNC LOSS BYPASS DRIVE
CORRECTION MONITOR OUTPUT GATE
BURST CORRECTIONS
MONITOR GATING
REMOTE LED DRIVE
MONOCHROME DETECTOR
DS9260 MANUAL
DS9280 MONOCHROME
DS9250 BYPASS
SEE PARTS LIST FOR EARLIER VALUES AND SERIAL NUMBER RANGES OF PARTS OUTLINED OR DEPICTED IN GREY.
P/O A3 TIMING CIRCUIT BOARD

PARTS LOCATING CHART

C3200	G-1	DS9270	F-10	R3666	E-3	U3750B	B-4
C3294	G-2			R3752	A-3	U3756	E-2
C3364	G-8	Q3532	A-2	R3754	A-4	U3762A	E-6
C3402	F-1	Q3862	B-7	R3842	C-5	U3762B	C-6
C3404	G-1			R3844	B-3	U3766A	F-3
C3446	C-4	R3158	G-7	R3848	A-3	U3766B	F-7
C3630	A-2	R3434	D-5	R3866	A-7	U3850A & U3850D	B-2
C3660	D-5	R3438	A-4	R3870	E-6	U3850B	B-7
C3664	E-3	R3450	C-5	R3873	B-2	U3850C	B-7
C3748	A-3	R3460	F-8	R3938	A-6		
C3758	E-2	R3464	F-7	R3974	B-2		
C3778	F-1	R3494	F-9				
C3836	A-4	R3520	B-5	U3360A	G-8		
C3864	B-7	R3530	O-2	U3550A	C-4		
C3868	E-7	R3534	A-3	U3550B	D-5		
C3950	G-1	R3540	D-2	U3562A	D-7		
C3976	B-1	R3592	F-8	U3562B	F-7		
		R3620	A-2	U3562D	C-7		
CR3734	A-1	R3622	A-1	U3590D	F-9		
CR3736	A-1	R3642	E-2	U3750A	B-3		

NOTES:

1. SEE PARTS LIST FOR SEMICONDUCTOR TYPES.
2. U3360, U3550, U3750, & U3766: PIN 16 IS CONNECTED TO +5 V, PIN 8 IS CONNECTED TO GROUND
3. ALL OTHER IC's: PIN 14 IS CONNECTED TO +5 V, PIN 7 IS CONNECTED TO GROUND.

1

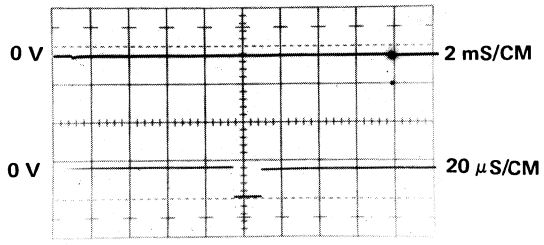

D.T.M. 8.9
10X probe to P3960-5
VOLTS/CM .5

2

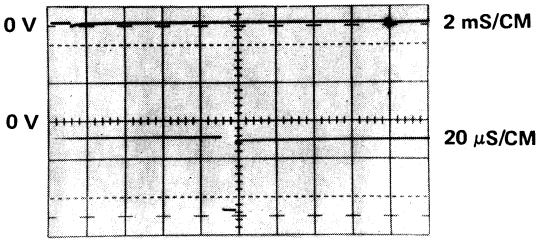

D.T.M. 8.9
10X probe to P3960-6
VOLTS/CM .2

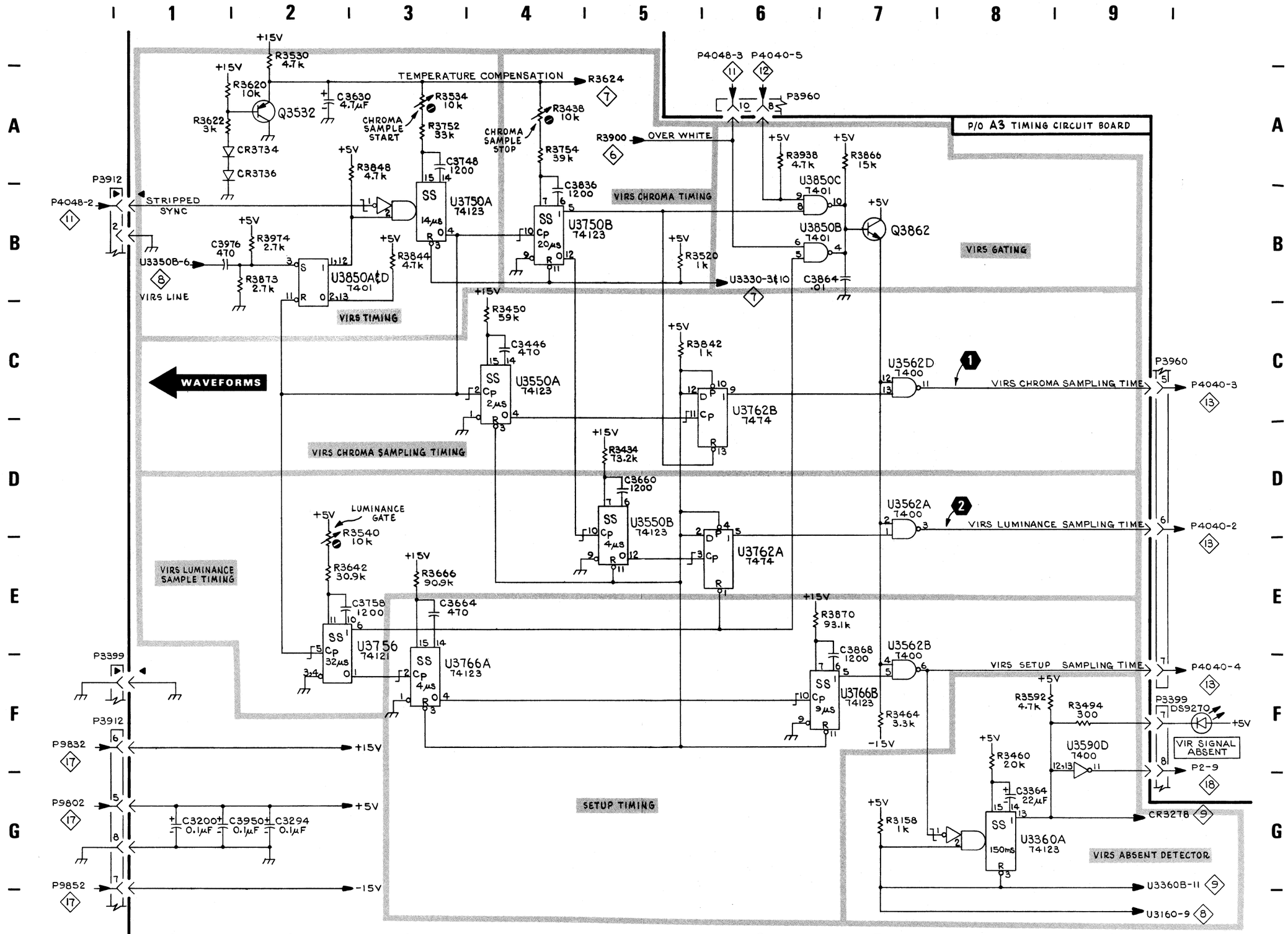
TEMPERATURE COMPENSATION
R3624
P/O A3 TIMING CIRCUIT BOARD
VIRS CHROMA TIMING
VIRS GATING
VIRS TIMING
WAVEFORMS
VIRS CHROMA SAMPLING TIMING
VIRS LUMINANCE SAMPLING TIME
VIRS CHROMA SAMPLING TIME
VIRS SETUP SAMPLING TIME
VIRS LUMINANCE SAMPLE TIMING
SETUP TIMING
VIRS ABSENT DETECTOR
VIR SIGNAL ABSENT
STRIPPED SYNC
VIRS LINE
OVER WHITE
CHROMA SAMPLE START
CHROMA SAMPLE STOP
LUMINANCE GATE
U3750A 74123
U3750B 74123
U3850A&D 7401
U3850C 7401
U3850B 7401
U3550A 74123
U3550B 74123
U3562D 7400
U3562A 7400
U3562B 7400
U3762B 7474
U3762A 7474
U3756 74121
U3766A 74123
U3766B 74123
U3360A 74123
U3590D 7400
Q3532
Q3862
DS9270
CR3278
P3912
P3399
P3960
P4048-2
P4048-3
P4040-5
P4040-3
P4040-2
P4040-4
P2-9
P9832
P9802
P9852
U3350B-6
U3330-3&10
U3360B-11
U3160-9
+15V
+5V
-15V
1440
REV. B, APR 1977
MEB-CM
VIRS SAMPLING TIMING

11

PARTS LOCATING CHART

C4050	D-8	CR4051	D-8	Q4358	E-6	R4194	E-3	R4350	B-8
C4052	E-8	CR4150	E-8	Q4360	E-5	R4196	C-3	R4352	B-2
C4064	D-7	CR4160	D-6	Q4364	F-5	R4198	D-2	R4362	E-5
C4090	E-3	CR4166	C-6	Q4366	E-4	R4199	D-2	R4370	F-4
C4154	D-7	CR4266	B-6	Q4424	A-5	R4238	B-8	R4374	F-4
C4172	G-7	CR4272	B-6	Q4440	B-2	R4242	A-2	R4386	D-1
C4184	G-2	CR4348	B-8	Q4454	B-2	R4246	A-8	R4388	D-1
C4186	G-4			Q4532	A-9	R4248	C-7	R4390	E-1
C4242	B-8	L4378	A-1			R4252	A-7	R4392	E-2
C4250	A-8					R4254	A-8	R4393	E-2
C4290	F-5	Q4031	B-4	R4010	B-4	R4258	C-7	R4428	A-4
C4294	B-1	Q4158	C-7	R4015	B-4	R4262	B-7	R4430	A-4
C4299	D-2	Q4152	D-9	R4020	B-4	R4268	B-6	R4438	A-8
C4340	A-3	Q4156	D-7	R4030	A-6	R4274	A-6	R4444	B-2
C4342	A-3	Q4176	G-7	R4052	D-9	R4280	C-6	R4446	A-2
C4344	A-3	Q4178	G-6	R4060	E-7	R4283	B-5	R4450	A-2
C4348	A-3	Q4190	D-3	R4070	G-6	R4284	E-5	R4534	A-9
C4356	E-7	Q4192	D-3	R4080	G-7	R4286	F-4		
C4368	E-4	Q4244	B-9	R4086	E-3	R4292	B-1	U4436A	A-3
C4372	F-4	Q4256	B-8	R4152	D-8	R4296	B-1	U4436B	A-4
C4376	A-1	Q4260	B-7	R4162	D-6	R4298	D-3		
C4426	A-4	Q4264	B-7	R4164	D-7	R4328	A-5		
C4852	G-1	Q4278	E-5	R4168	C-6	R4330	B-5		
C4854	G-1	Q4281	C-5	R4182	G-5	R4332	A-3		
C4860	G-1	Q4282	F-5	R4184	F-4	R4334	B-9		
		Q4291	F-4	R4188	G-4	R4336	A-3		

NOTES:

1. SEE PARTS LIST FOR SEMICONDUCTOR TYPES.
2. U4436: PIN 8 IS CONNECTED TO +15 V, PIN 4 IS CONNECTED TO −15 V.

1

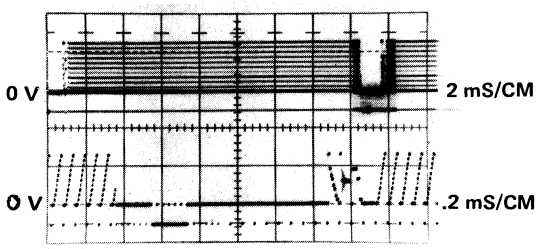

D.T.M. 8.1
10X probe to TP4505
VOLTS/CM .5

2

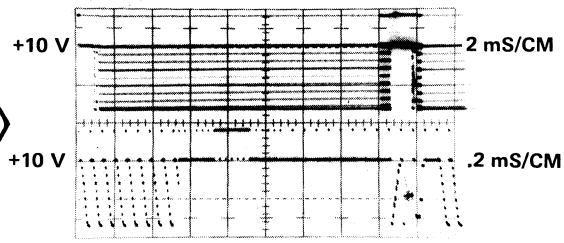

D.T.M. 8.1
10X probe base Q4281
VOLTS/CM .1

3

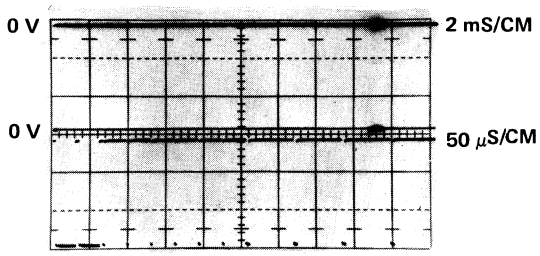

D.T.M. 8.5
10X probe to collector of Q4256
VOLTS/CM .2

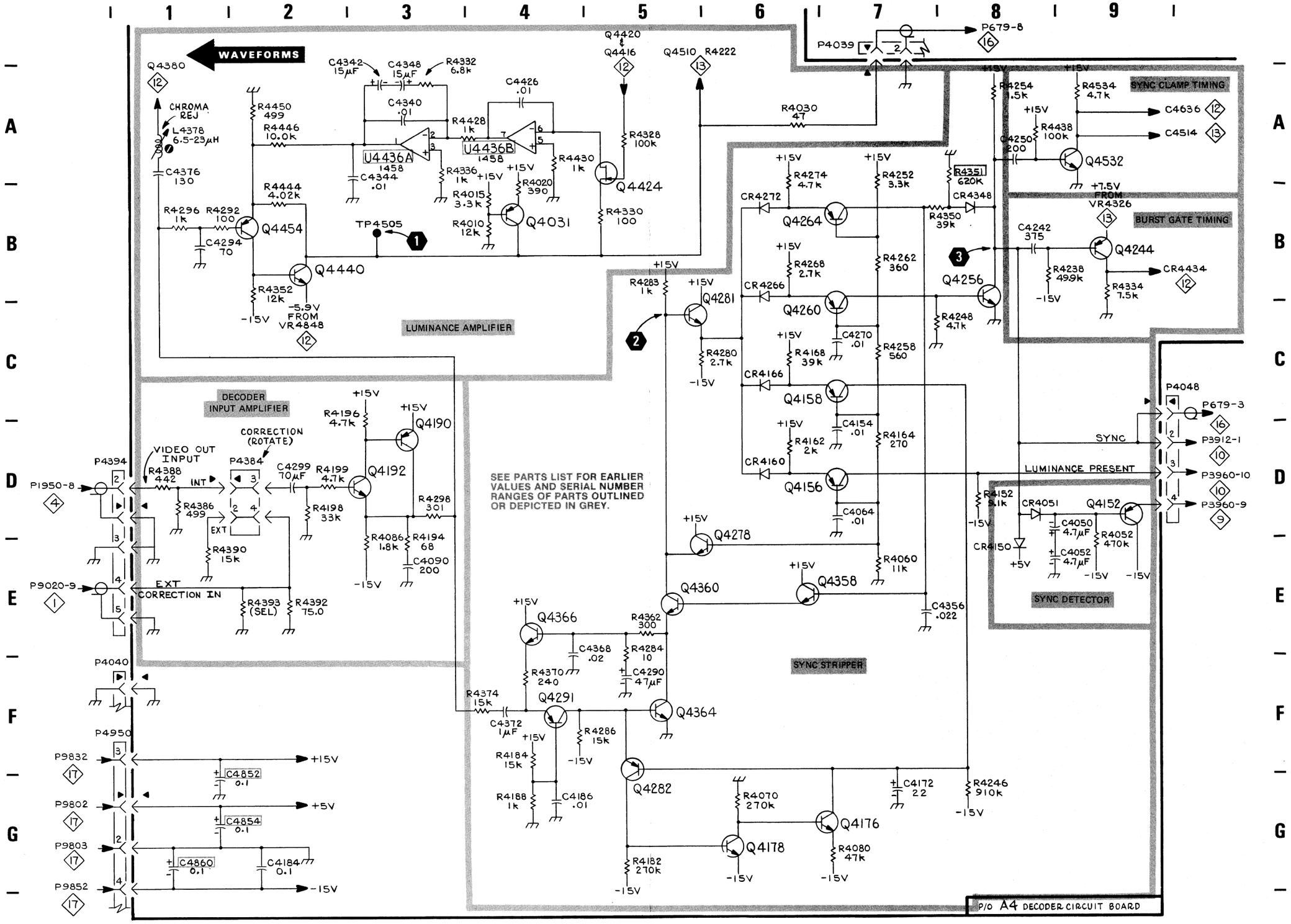
WAVEFORMS
LUMINANCE AMPLIFIER
DECODER INPUT AMPLIFIER
SYNC CLAMP TIMING
BURST GATE TIMING
SYNC STRIPPER
SYNC DETECTOR
SEE PARTS LIST FOR EARLIER VALUES AND SERIAL NUMBER RANGES OF PARTS OUTLINED OR DEPICTED IN GREY.
CHROMA REJ
L4378 6.5-23μH
C4376 130
R4450 499
R4446 10.0k
R4444 4.02k
R4296 1k
R4292 100
C4294 70
Q4454
Q4440
R4352 12k
-5.9V FROM VR4848
TP4505
C4342 15μF
C4348 15μF
R4332 6.8k
C4340 .01
C4426 .01
R4428 1k
U4436A 1458
U4436B 1458
C4344 .01
R4336 1k
R4015 3.3k
R4020 390
R4010 12k
Q4031
R4430 1k
Q4420
Q4416
R4328 100k
Q4424
R4330 100
Q4510
R4222
R4030 47
P4039
P679-8
R4254 1.5k
R4534 4.7k
R4438 100k
C4250 200
Q4532
C4636
C4514
+7.5V FROM VR4326
C4242 375
Q4244
R4238 49.9k
R4334 7.5k
CR4434
R4274 4.7k
R4252 3.3k
R4351 620k
CR4272
CR4348
Q4264
R4350 39k
R4268 2.7k
R4262 360
CR4266
Q4260
Q4256
R4248 4.7k
R4283 1k
Q4281
R4280 2.7k
C4270 .01
R4168 39k
R4258 560
CR4166
Q4158
C4154 .01
R4162 2k
R4164 270
CR4160
Q4156
C4064 .01
R4060 11k
Q4278
Q4358
Q4360
C4356 .022
R4196 4.7k
Q4190
Q4192
R4199 4.7k
C4299 70μF
R4198 33k
R4298 301
R4086 1.8k
R4194 68
C4090 200
P4394
P1950-8
VIDEO OUT INPUT
R4388 442
INT
P4384
CORRECTION (ROTATE)
R4386 499
EXT
R4390 15k
P9020-9
EXT CORRECTION IN
R4393 (SEL)
R4392 75.0
P4040
P4950
P9832
P9802
P9803
P9852
C4852 0.1
C4854 0.1
C4860 0.1
C4184 0.1
+15V
+5V
-15V
Q4366
C4368 .02
R4370 240
R4362 300
R4284 10
C4290 47μF
R4374 15k
C4372 1μF
Q4291
R4286 15k
R4184 15k
R4188 1k
C4186 .01
Q4364
Q4282
R4182 270k
R4070 270k
Q4178
Q4176
R4080 47k
C4172 22
R4246 910k
P4048
P679-3
P3912-1
P3960-10
P3960-9
SYNC
LUMINANCE PRESENT
R4152 5.1k
CR4051
Q4152
C4050 4.7μF
R4052 470k
C4052 4.7μF
CR4150
P/O A4 DECODER CIRCUIT BOARD

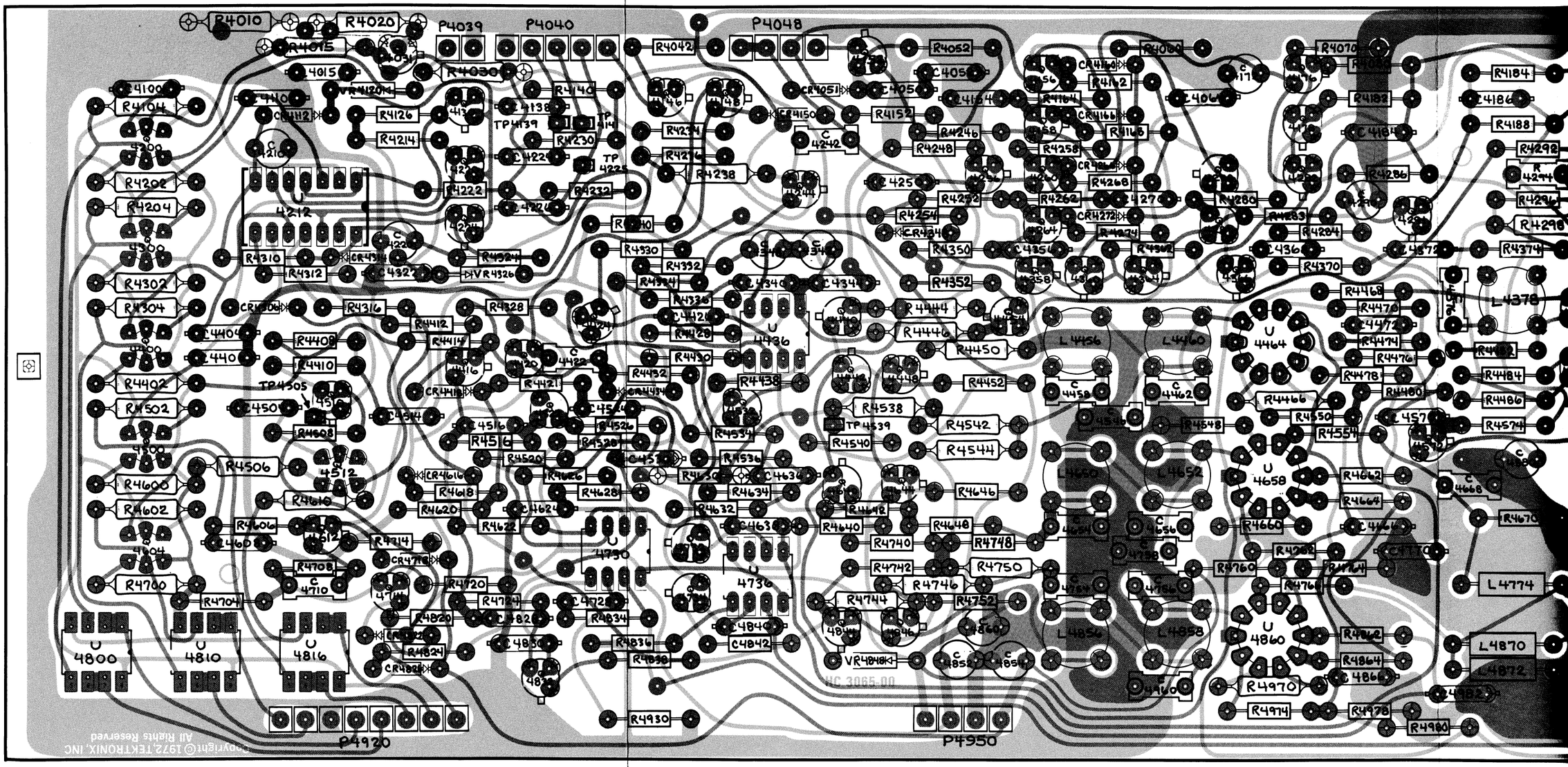
R4010
R4020
P4039
P4040
P4048
R4015
R4030
R4042
R4052
R4060
R4070
R4184
R4186
R4188
R4292
R4294
R4296
R4298
R4374
L4378
R4468
R4470
R4472
R4474
R4476
R4478
R4480
R4482
R4484
R4486
R4574
L4774
L4870
L4872
R4970
R4974
R4978
R4980
P4920
P4950
U 4800
U 4810
U 4816
U 4730
U 4736
U 4436
U 4464
U 4658
U 4860
L4456
L4460
L4854
L4858
TP4139
TP4505
TP4539
4212
4512
4300
4302
4304
4400
4402
4500
4502
4600
4602
4604
4700
R4100
R4104
R4202
R4204
R4302
R4304
R4402
R4502
R4600
R4602
R4700
R4126
R4214
R4222
R4230
R4232
R4310
R4312
R4316
R4328
R4408
R4410
R4412
R4414
R4421
R4506
R4608
R4610
R4618
R4620
R4622
R4626
R4628
R4714
R4708
R4704
R4720
R4724
R4820
R4824
R4834
R4836
R4838
R4930
R4932
R4934
R4936
R4938
R4940
R4942
R4944
R4946
R4948
R4950
R4952
R4954
R4956
R4958
R4960
R4962
R4964
R4966
R4968
R4970
R4974
R4978
R4980
R4152
R4246
R4248
R4252
R4254
R4350
R4352
R4444
R4446
R4450
R4452
R4538
R4540
R4542
R4544
R4646
R4740
R4742
R4746
R4748
R4750
R4752
R4760
R4762
R4764
R4766
R4862
R4864
R4866
R4882
R4884
R4886
R4888
R4890
R4892
R4894
R4896
R4898
R4900
R4902
R4904
R4906
R4908
R4910
R4912
R4914
R4916
R4918
R4920
R4922
R4924
R4926
R4928
R4930
R4932
R4934
R4936
R4938
R4940
R4942
R4944
R4946
R4948
R4950
R4952
R4954
R4956
R4958
R4960
R4962
R4964
R4966
R4968
R4970
R4974
R4978
R4980
C4100
C4404
C4440
C4450
C4454
C4456
C4516
C4520
C4522
C4524
C4526
C4528
C4530
C4532
C4534
C4536
C4538
C4540
C4542
C4544
C4546
C4548
C4550
C4552
C4554
C4556
C4558
C4560
C4562
C4564
C4566
C4568
C4570
C4572
C4574
C4576
C4578
C4580
C4582
C4584
C4586
C4588
C4590
C4592
C4594
C4596
C4598

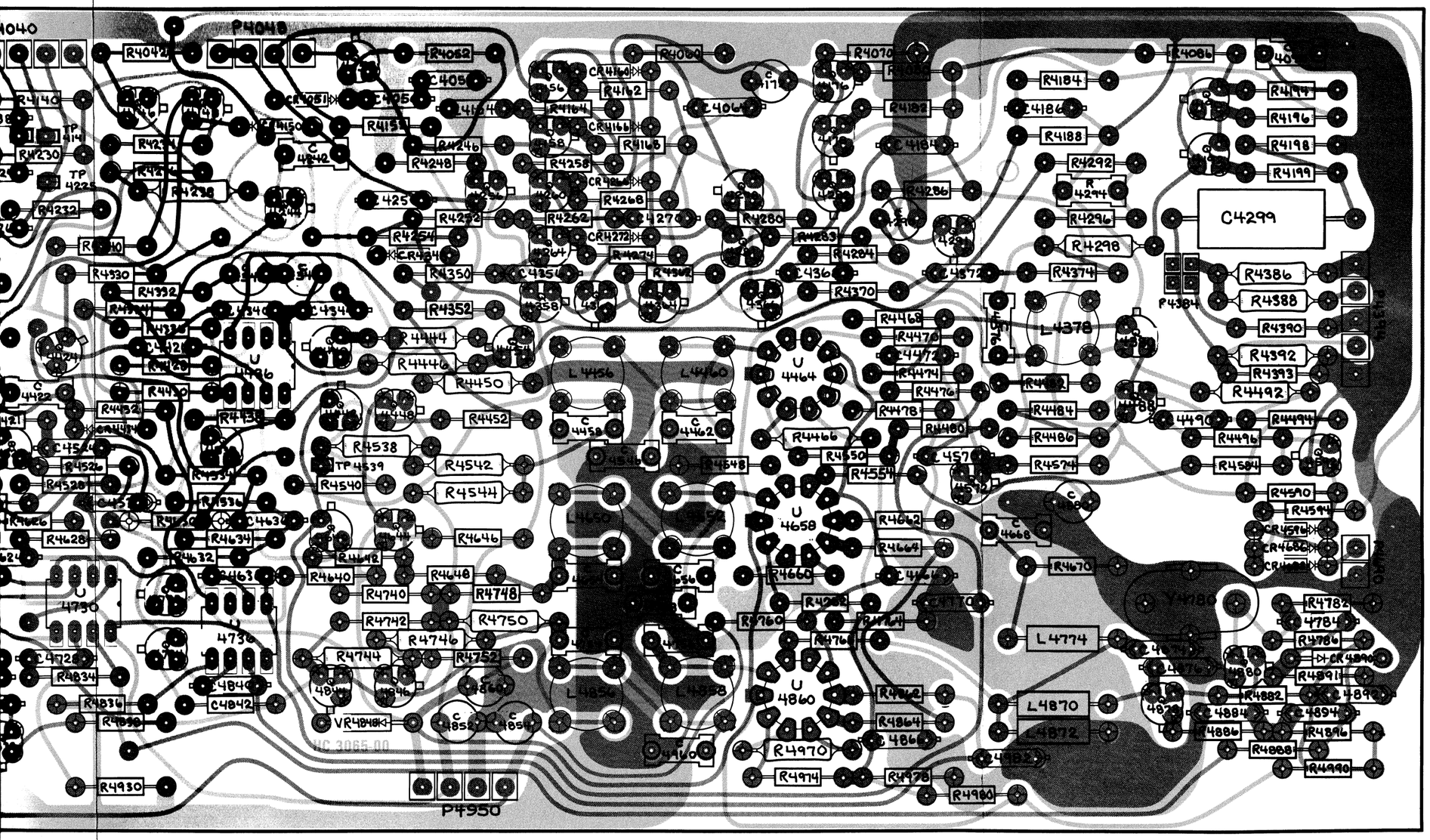
P4048
P4950
C4299
L4378
L4436
L4460
L4774
L4870
L4872
U 4464
U 4658
U 4860
U 4730
U 4736
U 4496
VR4848
R4970
R4974
R4978
R4980
R4930
R4990
R4994
R4896
R4886
R4888
R4882
R4884
R4894
R4892
R4890
R4786
R4784
R4782
R4780
R4670
R4668
R4666
R4664
R4662
R4660
R4658
R4656
R4654
R4652
R4650
R4648
R4646
R4644
R4642
R4640
R4638
R4636
R4634
R4632
R4630
R4628
R4626
R4624
R4622
R4620
R4618
R4616
R4614
R4612
R4610
R4608
R4606
R4604
R4602
R4600
R4598
R4596
R4594
R4592
R4590
R4588
R4586
R4584
R4582
R4580
R4578
R4576
R4574
R4572
R4570
R4568
R4566
R4564
R4562
R4560
R4558
R4556
R4554
R4552
R4550
R4548
R4546
R4544
R4542
R4540
R4538
R4536
R4534
R4532
R4530
R4528
R4526
R4524
R4522
R4520
R4518
R4516
R4514
R4512
R4510
R4508
R4506
R4504
R4502
R4500
R4498
R4496
R4494
R4492
R4490
R4488
R4486
R4484
R4482
R4480
R4478
R4476
R4474
R4472
R4470
R4468
R4466
R4464
R4462
R4460
R4458
R4456
R4454
R4452
R4450
R4448
R4446
R4444
R4442
R4440
R4438
R4436
R4434
R4432
R4430
R4428
R4426
R4424
R4422
R4420
R4418
R4416
R4414
R4412
R4410
R4408
R4406
R4404
R4402
R4400
R4398
R4396
R4394
R4392
R4390
R4388
R4386
R4384
R4382
R4380
R4378
R4376
R4374
R4372
R4370
R4368
R4366
R4364
R4362
R4360
R4358
R4356
R4354
R4352
R4350
R4348
R4346
R4344
R4342
R4340
R4338
R4336
R4334
R4332
R4330
R4328
R4326
R4324
R4322
R4320
R4318
R4316
R4314
R4312
R4310
R4308
R4306
R4304
R4302
R4300
R4298
R4296
R4294
R4292
R4290
R4288
R4286
R4284
R4282
R4280
R4278
R4276
R4274
R4272
R4270
R4268
R4266
R4264
R4262
R4260
R4258
R4256
R4254
R4252
R4250
R4248
R4246
R4244
R4242
R4240
R4238
R4236
R4234
R4232
R4230
R4228
R4226
R4224
R4222
R4220
R4218
R4216
R4214
R4212
R4210
R4208
R4206
R4204
R4202
R4200
R4198
R4196
R4194
R4192
R4190
R4188
R4186
R4184
R4182
R4180
R4178
R4176
R4174
R4172
R4170
R4168
R4166
R4164
R4162
R4160
R4158
R4156
R4154
R4152
R4150
R4148
R4146
R4144
R4142
R4140
R4138
R4136
R4134
R4132
R4130
R4128
R4126
R4124
R4122
R4120
R4118
R4116
R4114
R4112
R4110
R4108
R4106
R4104
R4102
R4100
R4098
R4096
R4094
R4092
R4090
R4088
R4086
R4084
R4082
R4080
R4078
R4076
R4074
R4072
R4070
R4068
R4066
R4064
R4062
R4060
R4058
R4056
R4054
R4052
R4050
R4048
R4046
R4044
R4042
R4040
C4405
C4406
C4407
C4408
C4409
C4410
C4411
C4412
C4413
C4414
C4415
C4416
C4417
C4418
C4419
C4420
C4421
C4422
C4423
C4424
C4425
C4426
C4427
C4428
C4429
C4430
C4431
C4432
C4433
C4434
C4435
C4436
C4437
C4438
C4439
C4440
C4441
C4442
C4443
C4444

PARTS LOCATING CHART

C4422	D-8	C4840	B-7	L4858	A-5	R4236	F-9	R4544	F-6	R4744	A-7	R4980	D-4
C4458	F-6	C4866	G-4	L4870	A-3	R4412	E-7	R4548	D-4	R4746	A-6	R4990	B-3
C4462	F-5	C4874	A-3	L4872	A-4	R4414	E-8	R4550	G-4	R4748	C-6		
C4472	F-4	C4876	A-3			R4421	E-7	R4554	C-4	R4750	A-6	U4464	F-5
C4490	E-2	C4884	B-2	Q4146	F-9	R4432	D-7	R4574	F-3	R4752	A-7	U4658	D-5
C4516	D-8	C4892	B-2	Q4148	F-9	R4452	F-7	R4584	E-3	R4760	B-5	U4730A	C-9
C4524	E-6	C4894	B-1	Q4380	E-2	R4466	E-5	R4590	G-2	R4762	D-4	U4730B	A-9
C4530	C-8	C4960	A-6	Q4416	E-8	R4468	F-4	R4594	F-2	R4764	A-4	U4736A	G-7
C4546	F-6	C4982	C-6	Q4420	D-8	R4470	F-4	R4618	E-7	R4766	A-4	U4736B	B-7
C4570	E-4			Q4442	F-7	R4474	F-4	R4620	E-7	R4782	A-2	U4860	B-5
C4580	D-3	CR4418	E-7	Q4448	F-7	R4476	G-6	R4622	E-8	R4786	A-2		
C4624	C-9	CR4434	D-7	Q4488	E-2	R4478	G-4	R4626	C-9	R4824	C-9	Y4780	A-2
C4636	B-8	CR4596	G-2	Q4522	D-9	R4480	E-4	R4628	C-9	R4834	A-9		
C4638	G-7	CR4616	A-8	Q4572	E-3	R4482	E-1	R4630	F-8	R4836	C-8		
C4654	D-6	CR4686	G-2	Q4592	G-3	R4484	D-2	R4632	B-8	R4838	A-8		
C4656	D-6	CR4688	G-2	Q4640	C-7	R4486	D-2	R4634	G-8	R4842	B-8		
C4666	G-5	CR4718	F-8	Q4644	C-7	R4492	E-2	R4640	G-8	R4862	B-6		
C4668	C-4	CR4826	C-9	Q4732	G-8	R4494	E-2	R4642	G-7	R4864	B-4		
C4728	A-9	CR4890	A-1	Q4734	B-8	R4496	E-3	R4646	D-7	R4882	A-2		
C4754	A-6	VR4848	B-7	Q4832	A-8	R4516	D-8	R4648	C-6	R4886	B-3		
C4756	A-5	L4456	F-6	Q4844	A-7	R4520	C-8	R4660	C-5	R4888	B-1		
C4758	D-5	L4460	F-6	Q4846	A-7	R4526	C-9	R4662	E-5	R4891	A-1		
C4770	G-6	L4650	C-6	Q4878	A-3	R4528	C-8	R4664	E-4	R4896	B-3		
C4784	A-1	L4652	C-5	Q4880	A-2	R4536	G-8	R4670	C-4	R4930	A-8		
C4828	B-8	L4774	B-4			R4538	E-7	R4724	B-8	R4970	A-5		
C4830	A-8	L4856	A-6	R4042	E-9	R4540	E-7	R4740	C-7	R4974	B-4		
				R4234	F-9	R4542	F-6	R4742	A-7	R4978	D-4		

NOTES:

1. SEE PARTS LIST FOR SEMICONDUCTOR TYPES.
2. U4730 & U4736: PIN 8 IS CONNECTED TO +15 V, PIN 4 IS CONNECTED TO −15 V.

1

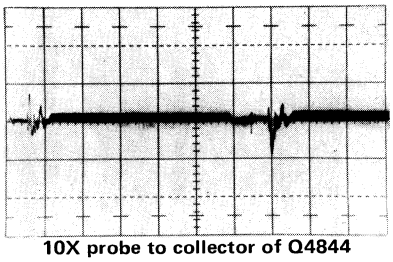

10X probe to collector of Q4844
VOLTS/CM .02

2

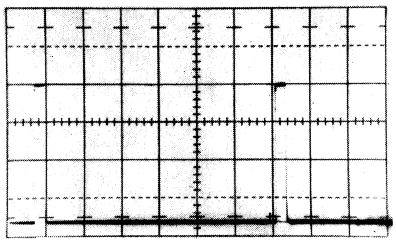

10X probe to collector of Q4416
VOLTS/CM .5

3

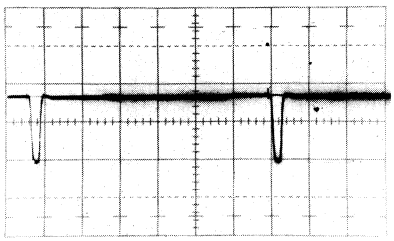

10X probe to collector of Q4640
VOLTS/CM .2

4

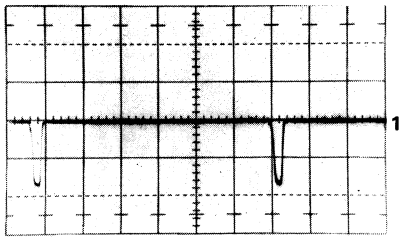

10X probe to TP4539
VOLTS/CM .2

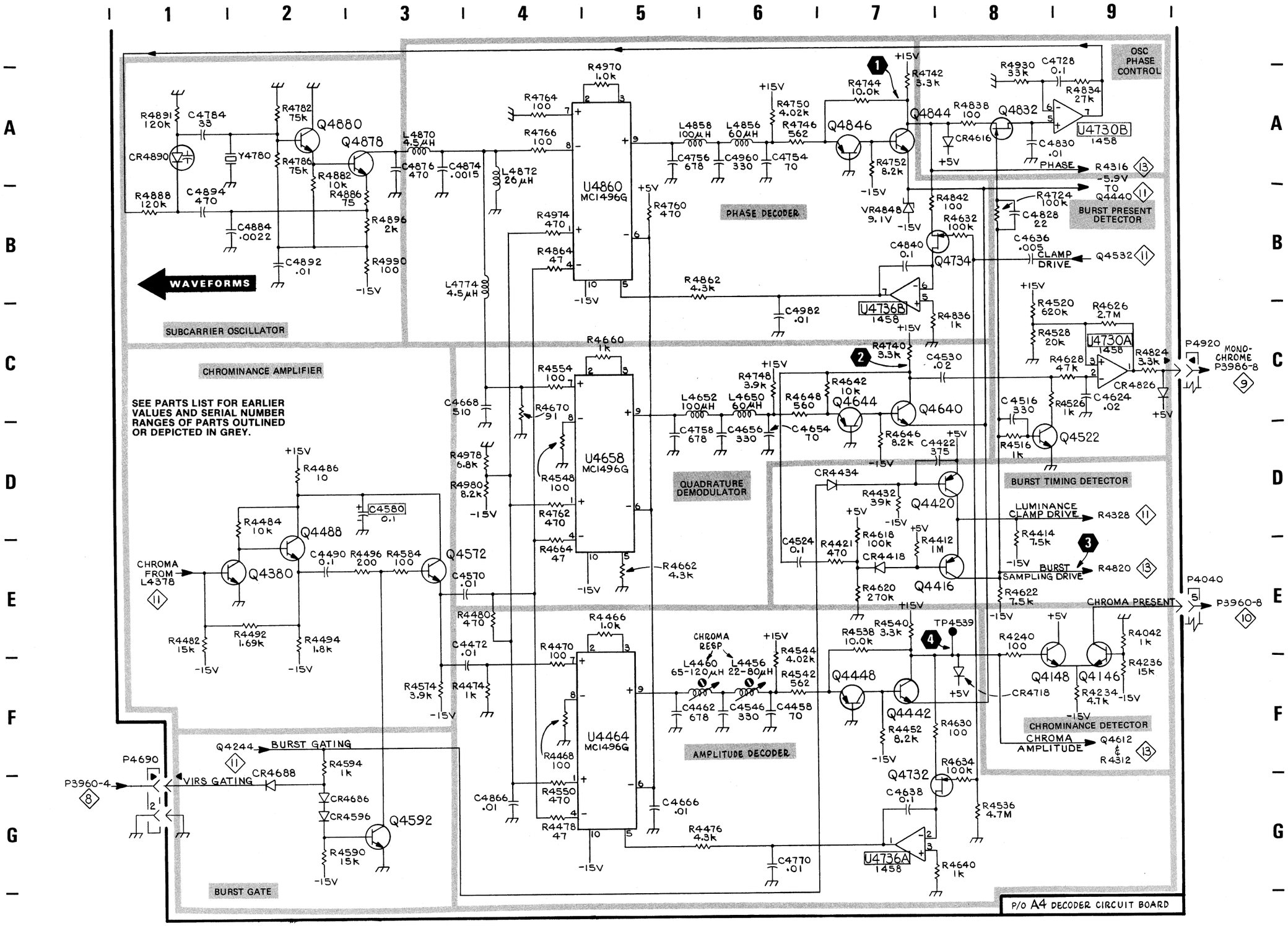
SUBCARRIER OSCILLATOR
WAVEFORMS
CHROMINANCE AMPLIFIER
SEE PARTS LIST FOR EARLIER VALUES AND SERIAL NUMBER RANGES OF PARTS OUTLINED OR DEPICTED IN GREY.
PHASE DECODER
QUADRATURE DEMODULATOR
AMPLITUDE DECODER
OSC PHASE CONTROL
BURST PRESENT DETECTOR
BURST TIMING DETECTOR
CHROMINANCE DETECTOR
BURST GATE
U4860 MC1496G
U4658 MC1496G
U4464 MC1496G
U4730B 1458
U4730A 1458
U4736B 1458
U4736A 1458
PHASE
CLAMP DRIVE
LUMINANCE CLAMP DRIVE
BURST SAMPLING DRIVE
CHROMA PRESENT
CHROMA AMPLITUDE
CHROMA FROM L4378
VIRS GATING
BURST GATING
MONO-CHROME
P/O A4 DECODER CIRCUIT BOARD

13

PARTS LOCATING CHART

C4015	G-2
C4100	C-6
C4110	D-6
C4138	E-2
C4210	F-2
C4220	F-2
C4224	G-3
C4226	D-2
C4322	F-2
C4404	G-6
C4406	E-6
C4504	B-6
C4514	B-4
C4608	A-6
C4710	A-5
CR4112	G-1
CR4306	D-3
CR4314	F-1
CR4822	A-3
VR4120	G-1
VR4326	E-1
Q4130	E-4
Q4200A	C-7
Q4200B	D-7
Q4220	G-5
Q4224	D-3
Q4300A	D-7
Q4300B	E-7
Q4400A	F-7
Q4400B	G-7
Q4500A	E-7
Q4500B	F-7
Q4510	B-6
Q4512A	B-7
Q4512B	C-7
Q4604A	A-7
Q4604B	A-7
Q4612	A-5
Q4714	A-4
R4104	C-7
R4126	D-4
R4140	E-3
R4202	D-7
R4204	D-7
R4214	F-5
R4222	C-3
R4230	G-4
R4232	C-2
R4302	E-7
R4304	G-7
R4310	F-1
R4312	E-3
R4316	F-4
R4324	C-3
R4402	G-7
R4408	C-5
R4410	B-5
R4502	E-7
R4506	C-7
R4508	B-5
R4600	F-7
R4602	A-7
R4606	A-5
R4610	B-7
R4700	B-7
R4704	B-4
R4708	A-5
R4714	A-4
R4720	A-4
R4820	A-2
U4212A	C-4
U4212B	D-4
U4212C	E-5
U4212D	F-5
U4800A	E-8
U4800B	C-8
U4810A	A-8
U4810B	G-8
U4816A	B-8
U4816B	F-8

NOTES:

1. SEE PARTS LIST FOR SEMICONDUCTOR TYPES.
2. U4212: PIN 14 IS CONNECTED TO +7 V, PIN 7 IS CONNECTED TO –7 V.
3. ALL OTHER IC's: PIN 8 IS CONNECTED TO +15 V, PIN 4 IS CONNECTED TO –15 V.

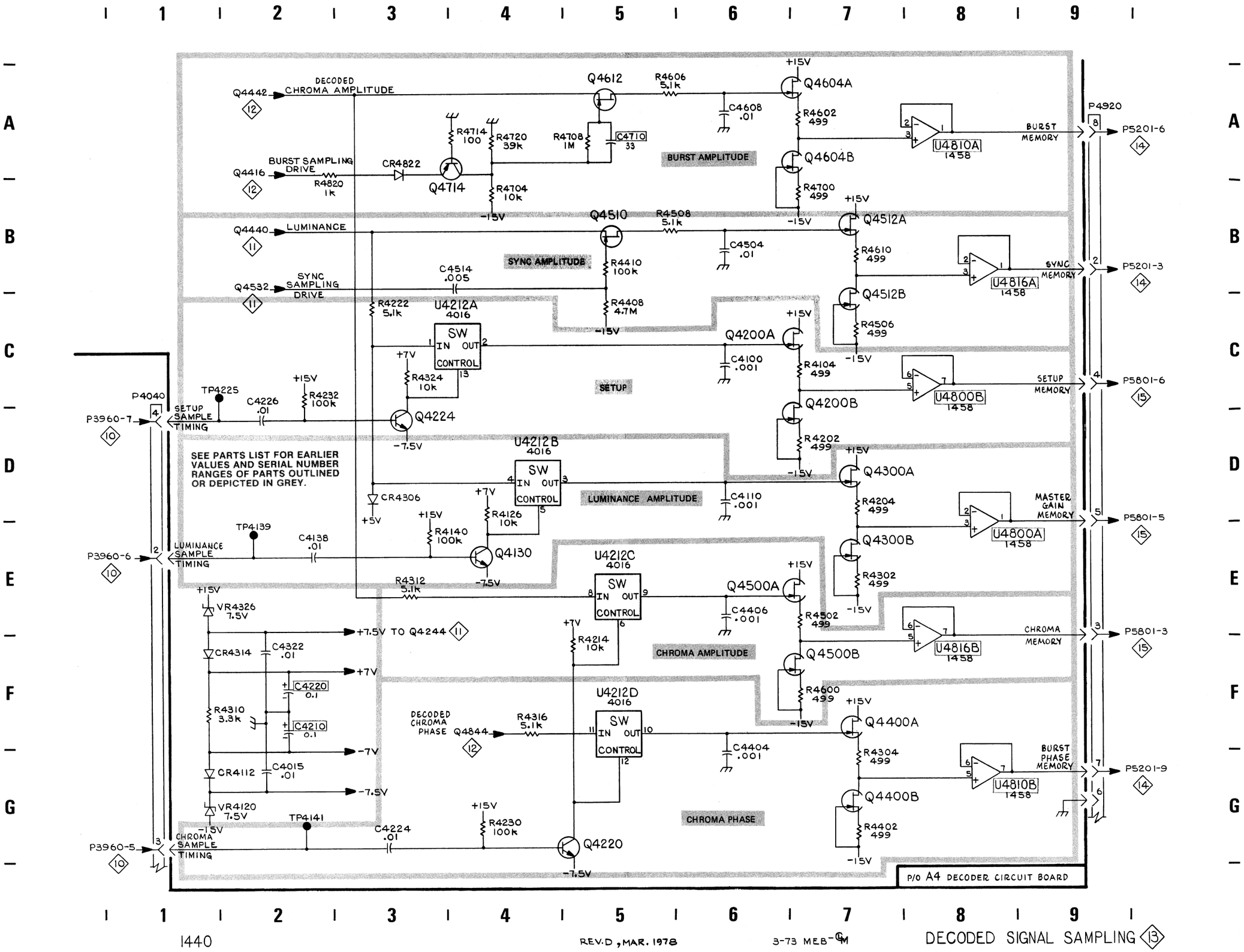

REV.D, MAR. 1978

3-73 MEB-GM

DECODED SIGNAL SAMPLING 13

PARTS LOCATING CHART

C5140	B-3	R5158	D-5	R5305	G-2
C5240	D-3	R5160	A-5	R5308	G-2
C5340	G-4	R5162	E-5	R5310	F-4
C5684	F-9	R5164	D-6	R5312	F-4
C5686	C-9	R5170	D-7	R5318	G-4
C5688	F-9	R5172	D-7	R5320	G-4
C5690	I-4	R5174	B-7	R5342	G-3
C5816	A-8	R5176	D-6	R5344	G-4
C5832	A-6	R5178	E-7	R5350	G-5
		R5180	E-7	R5354	G-5
CR5812	A-8	R5182	D-7	R5359	F-6
CR5840	A-6	R5186	D-7	R5456	F-5
VR5254	H-5	R5188	B-7	R5470	G-7
VR5354	G-5	R5190	E-8	R5490	G-7
		R5192	E-9	R5650	F-5
F5691	C-9	R5193	E-8	R5652	F-5
F5692	F-9	R5200	D-1	R5656	G-6
		R5202	D-1	R5658	G-5
Q5114	A-3	R5204	D-2	R5660	G-7
Q5116	B-3	R5206	E-2	R5670	G-7
Q5195	E-8	R5208	D-2	R5672	G-7
Q5214	C-3	R5210	D-3	R5674	G-6
Q5216	D-3	R5212	C-4	R5680	G-7
Q5295	C-8	R5218	D-3	R5693	G-8
Q5314	F-3	R5220	D-4	R5694	G-9
Q5316	G-4	R5242	E-3	R5695	G-8
Q5694	G-9	R5244	E-3	R5804	A-8
Q5806	A-9	R5250	A-5	R5808	A-7
		R5252	A-5	R5810	A-9
R5052	B-5	R5254	E-5	R5814	A-8
R5100	B-1	R5256	B-6	R5828	A-7
R5102	B-1	R5258	C-5	R5830	A-7
R5104	B-2	R5260	B-7	R5834	A-6
R5106	E-2	R5270	C-4		
R5108	B-2	R5272	B-7	U5122	B-3
R5110	A-3	R5274	B-6	U5166A	E-6
R5112	A-4	R5280	B-7	U5166B	B-6
R5118	B-3	R5290	B-8	U5184A	E-7
R5120	B-4	R5292	B-9	U5184B	B-7
R5142	B-3	R5294	C-3	U5222	E-3
R5144	C-3	R5300	G-1	U5322	G-4
R5150	D-5	R5302	G-1	U5460B	G-6
R5156	C-5	R5304	G-2	U5480B	G-7
				U5818B	A-7

NOTES:

1. SEE PARTS LIST FOR SEMICONDUCTOR TYPES.
2. U5122, U5222, & U5322: PIN 7 IS CONNECTED TO +15 V, PIN 4 IS CONNECTED TO –15 V.
3. ALL OTHER IC's: PIN 8 IS CONNECTED TO +15 V, PIN 4 IS CONNECTED TO –15 V.

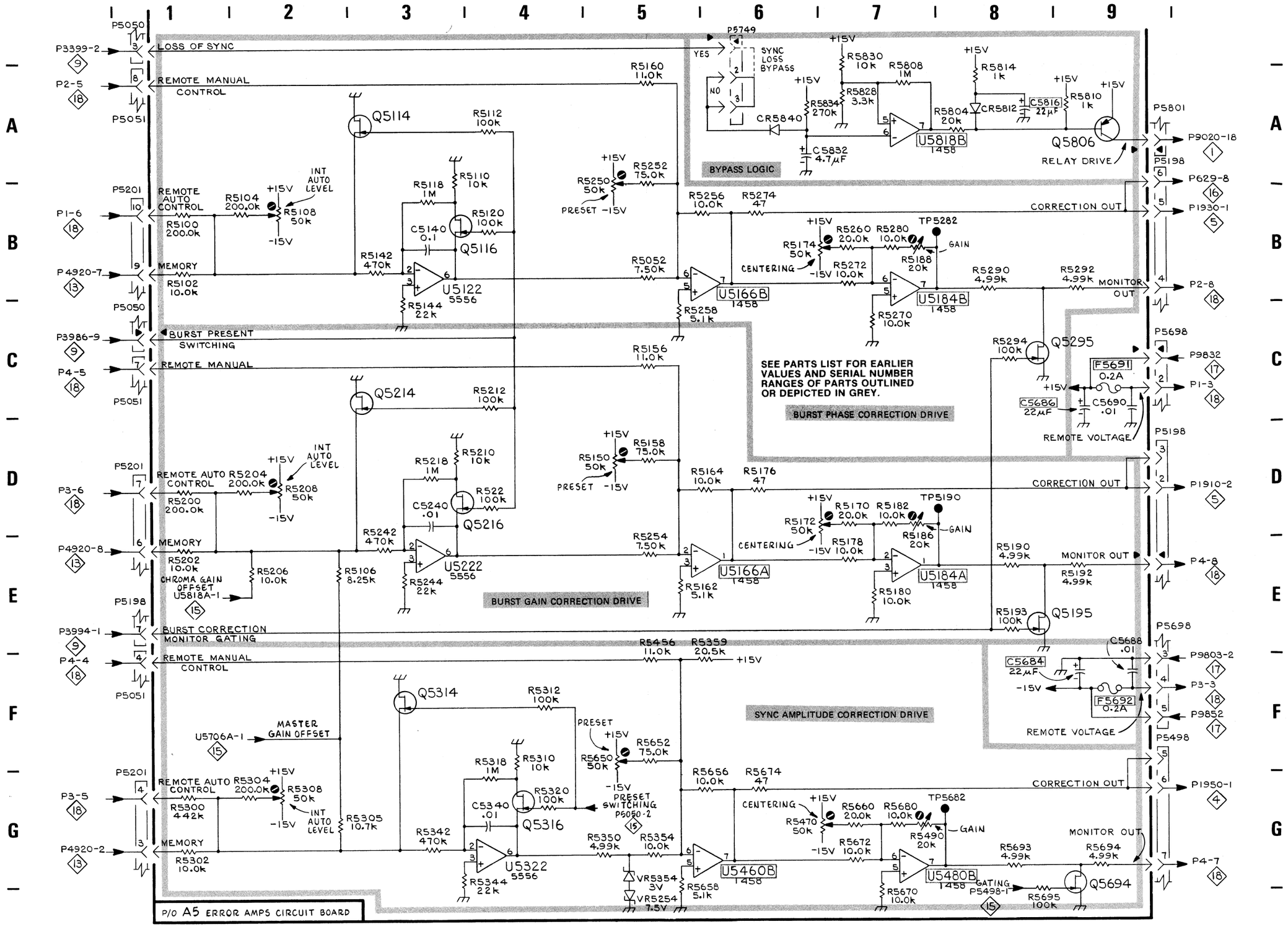

SYNC & BURST ERROR AMPS 14

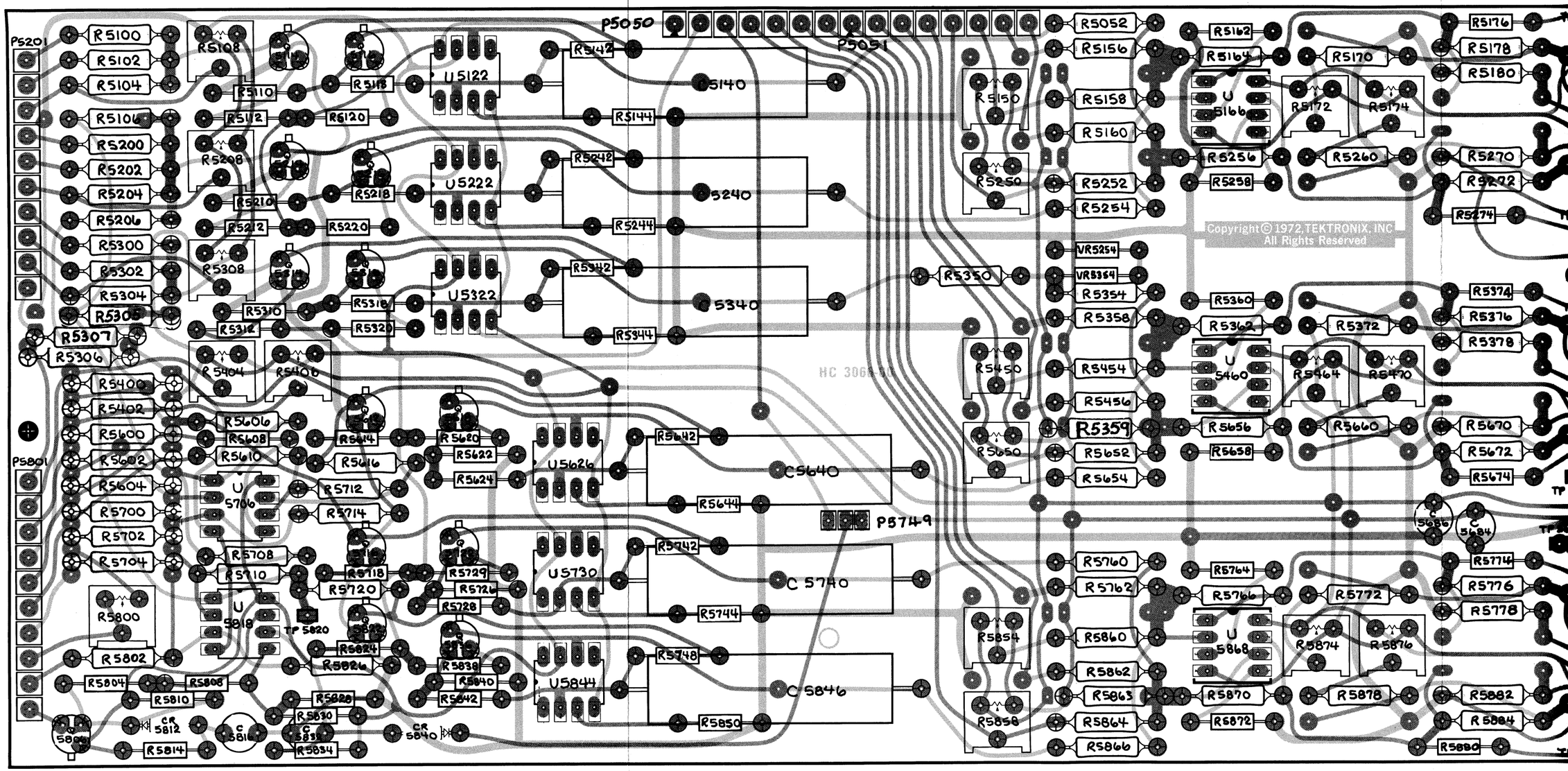

REV. B, APR. 1977

A5 ERROR AMPS CIRCUIT BOARD

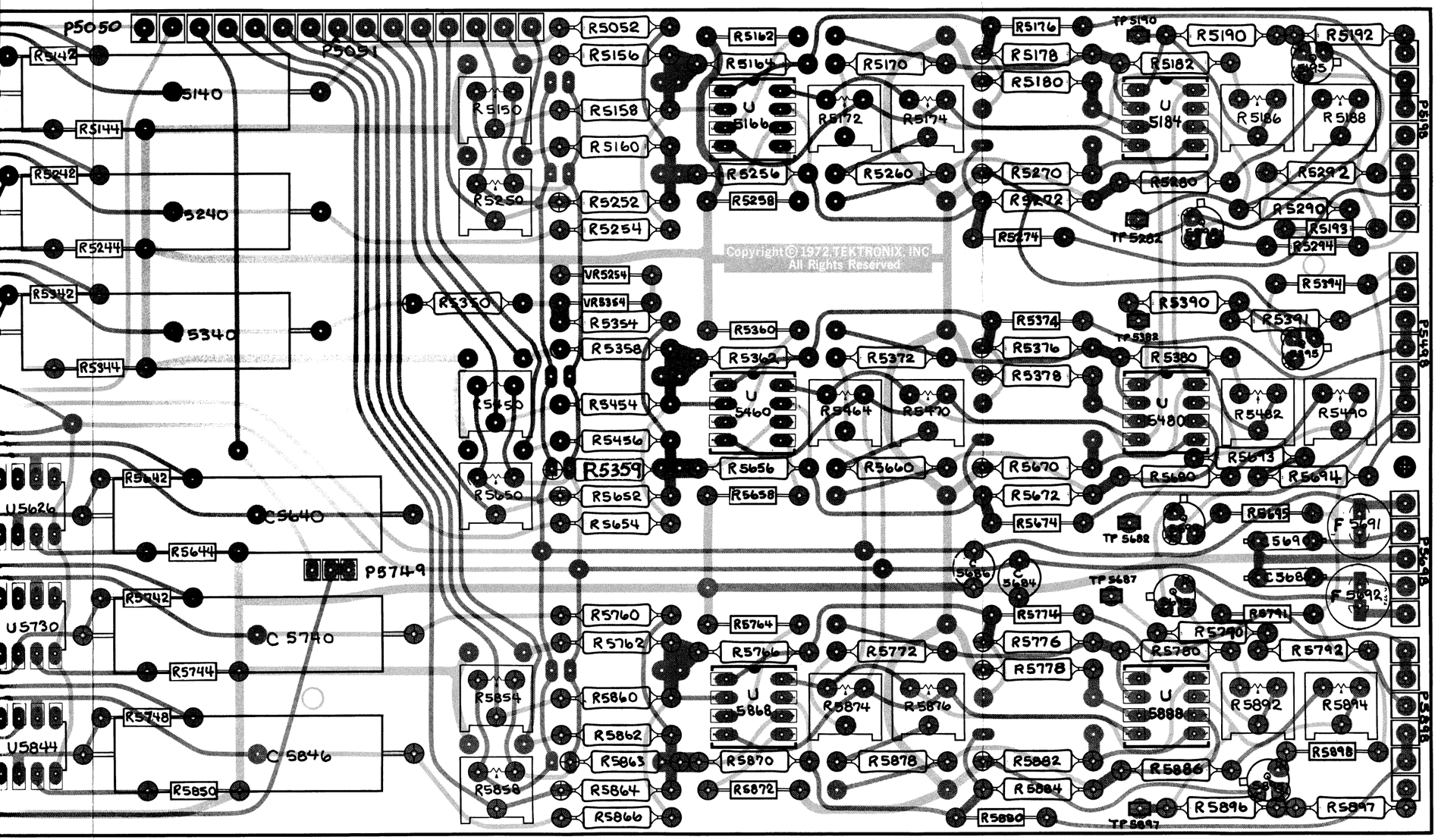

Copyright © 1972 TEKTRONIX, INC
All Rights Reserved

A5 ERROR AMPS CIRCUIT BOARD

15

PARTS LOCATING CHART

C5640	B-4
C5740	D-4
C5846	F-4
Q5395	C-8
Q5612	A-3
Q5618	B-4
Q5695	G-8
Q5716	C-3
Q5722	D-4
Q5822	F-3
Q5836	F-4
Q5895	E-8
R5306	A-2
R5307	D-2
R5358	O-5
R5360	B-6
R5362	A-6
R5372	B-7
R5374	A-6
R5376	B-7
R5378	B-7
R5380	B-7
R5390	B-8
R5391	B-9
R5394	C-8
R5400	A-3
R5402	E-3
R5404	A-3
R5406	D-3
R5450	A-5
R5454	A-5
R5464	B-7
R5482	B-8
R5600	D-3
R5602	D-2
R5604	D-1
R5606	E-2
R5608	B-1
R5610	B-1
R5614	A-4
R5616	B-2
R5620	B-4
R5622	A-4
R5624	A-4
R5642	B-3
R5644	B-4
R5654	B-5
R5700	D-1
R5702	E-1
R5704	F-2
R5708	G-2
R5710	F-2
R5712	B-2
R5714	E-1
R5718	C-4
R5720	G-3
R5726	D-4
R5728	D-4
R5729	D-4
R5742	E-4
R5744	E-4
R5748	G-3
R5760	E-5
R5762	E-5
R5764	G-6
R5766	F-6
R5772	F-7
R5774	F-6
R5776	G-7
R5778	G-7
R5780	G-7
R5790	G-8
R5791	G-8
R5792	G-9
R5800	F-1
R5802	G-2
R5824	F-4
R5826	G-2
R5838	F-4
R5840	F-4
R5842	F-4
R5850	G-4
R5854	F-5
R5858	D-5
R5860	F-5
R5862	C-5
R5863	E-5
R5864	D-5
R5866	G-5
R5870	D-6
R5872	E-6
R5874	F-7
R5876	D-7
R5878	D-7
R5880	D-6
R5882	E-7
R5884	E-7
R5886	D-8
R5892	F-8
R5894	D-8
R5896	E-8
R5897	E-9
R5898	E-8
U5460A	B-6
U5480A	B-8
U5626	B-4
U5706A	E-2
U5706B	B-2
U5730	E-4
U5818A	G-2
U5844	G-4
U5868A	G-6
U5868B	E-6
U5888A	G-8
U5888B	E-8

NOTES:

1. SEE PARTS LIST FOR SEMICONDUCTOR TYPES.

2. U5626, U5720, & U5844: PIN 7 IS CONNECTED TO +15 V, PIN 4 IS CONNECTED TO –15 V.

3. ALL OTHER IC's: PIN 8 IS CONNECTED TO +15 V, PIN 4 IS CONNECTED TO –15 V.

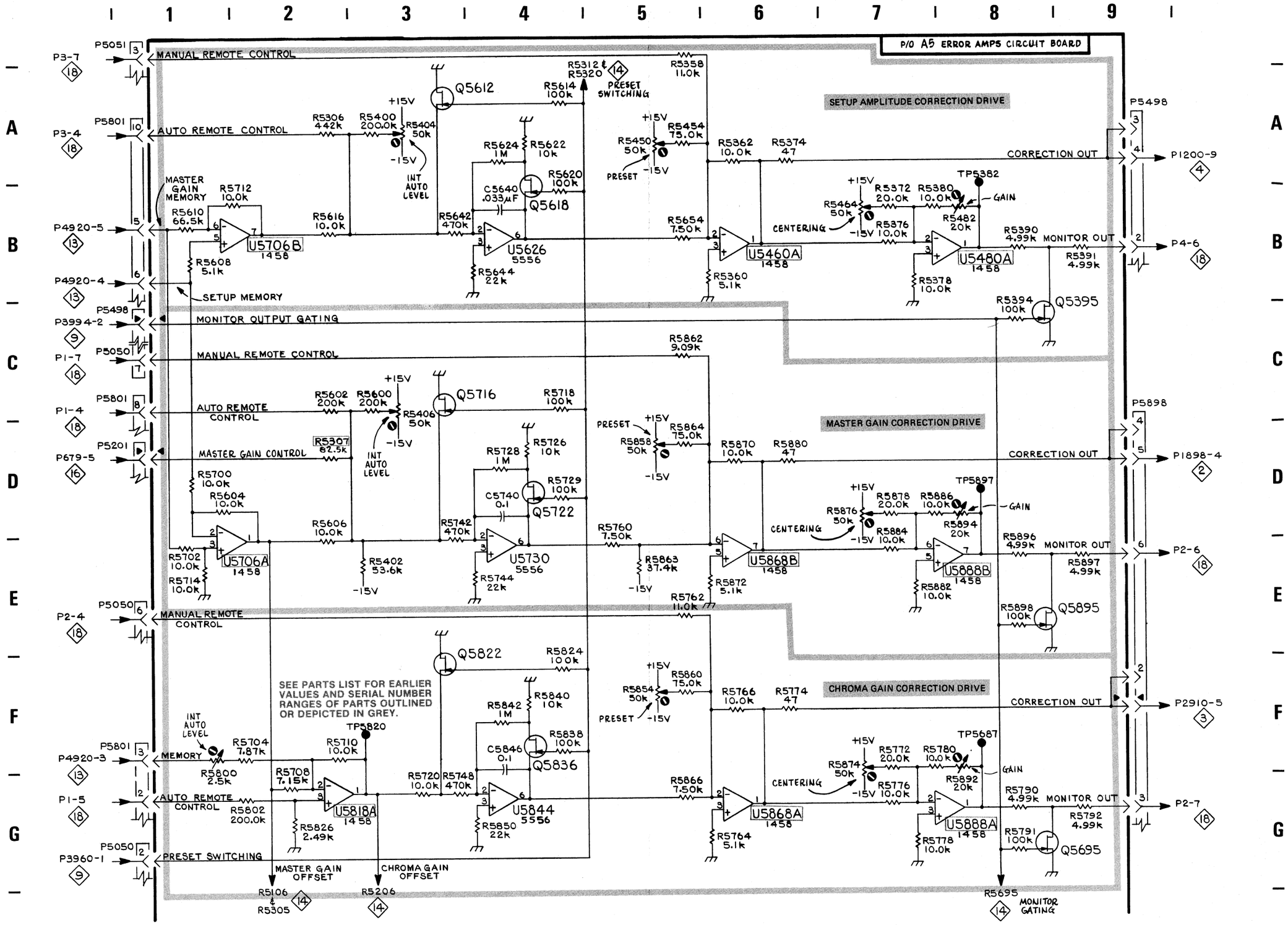
P/O A5 ERROR AMPS CIRCUIT BOARD
MANUAL REMOTE CONTROL
AUTO REMOTE CONTROL
MASTER GAIN MEMORY
SETUP MEMORY
MONITOR OUTPUT GATING
MASTER GAIN CONTROL
INT AUTO LEVEL
PRESET SWITCHING
SETUP AMPLITUDE CORRECTION DRIVE
MASTER GAIN CORRECTION DRIVE
CHROMA GAIN CORRECTION DRIVE
CORRECTION OUT
MONITOR OUT
CENTERING
GAIN
PRESET
MEMORY
MASTER GAIN OFFSET
CHROMA GAIN OFFSET
MONITOR GATING
SEE PARTS LIST FOR EARLIER VALUES AND SERIAL NUMBER RANGES OF PARTS OUTLINED OR DEPICTED IN GREY.
U5706B 1458
U5460A 1458
U5480A 1458
U5706A 1458
U5868B 1458
U5888B 1458
U5818A 1458
U5868A 1458
U5888A 1458
U5626 5556
U5730 5556
U5844 5556
Q5612
Q5618
Q5395
Q5716
Q5722
Q5895
Q5822
Q5836
Q5695
TP5382
TP5897
TP5687
TP5820
P5051
P5801
P4920-5
P4920-4
P5498
P3994-2
P5050
P5201
P5898
P2-4
P4920-3
P1-5
P3960-1
P1200-9
P4-6
P1898-4
P2-6
P2910-5
P2-7
R5312 & R5320
R5106 & R5305
R5206
R5695

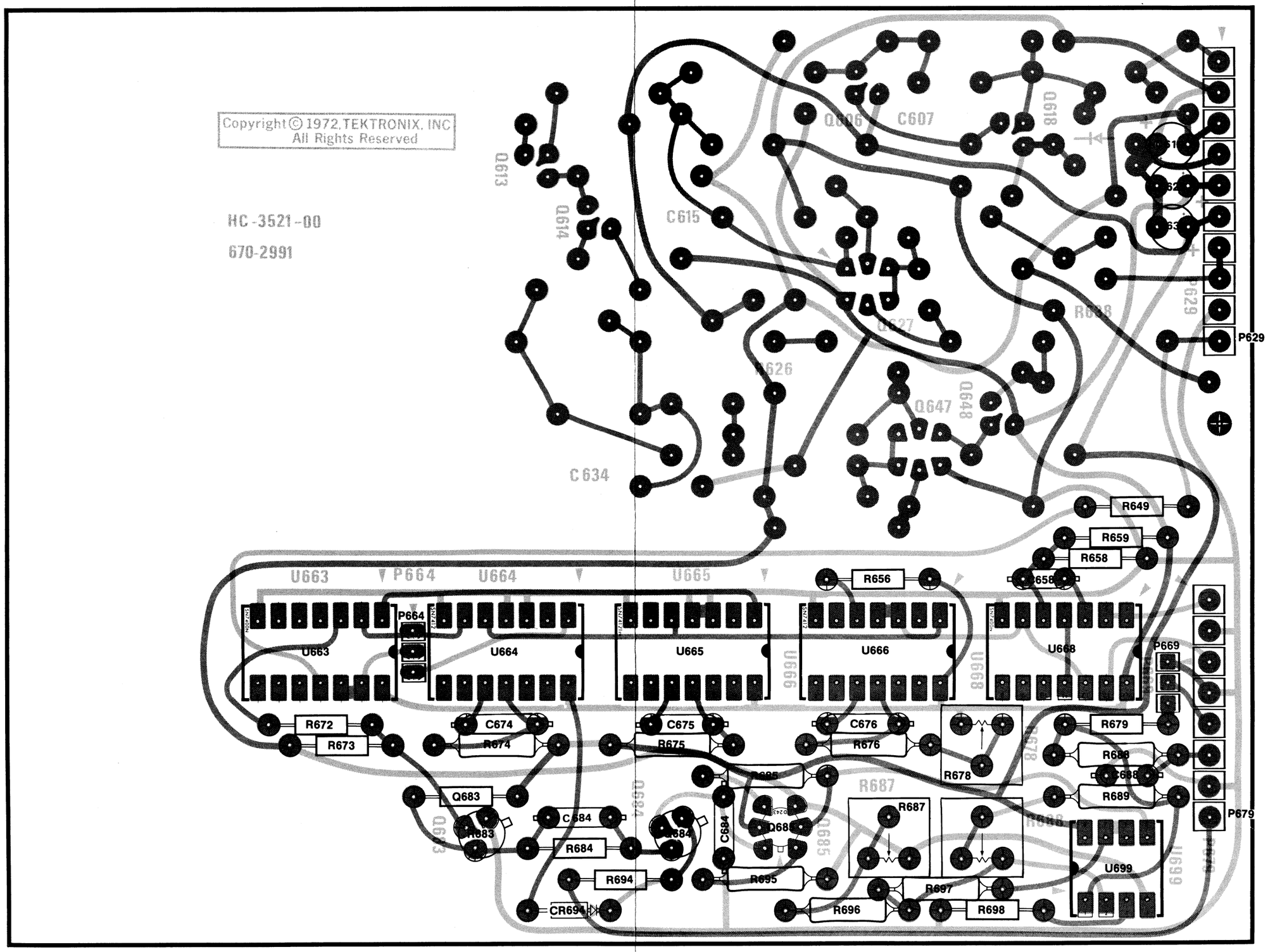

A7 ZERO REFERENCE DRIVE BOARD

REV. C, APR. 1977

16

PARTS LOCATING CHART

C619	G1
C629	G1
C639	G1
C658	B2
C674	A4
C675	B4
C676	A4
C684	D6
C685	E6
C688	F9
CR694	D5
DS694	E5
Q683	D5
Q684	E6
Q685A	E6
Q685B	E6
R649	A7
R656	A3
R658	B2
R659	A2
R672	C5
R673	C5
R674	Q4
R675	B4
R676	A4
R677	E8
R678	A4
R679	E8
R683	C5
R684	D6
R685	E6
R687	F7
R688	E8
R689	E8
R694	E5
R695	F6
R696	E7
R697	E7
R698	F8
U663A	C5
U663B	A7
U664	A4
U665	C4
U666	B4
U668A	B2
U668B	B3
U668D	B3
U699A	E8
U699B	E7

1

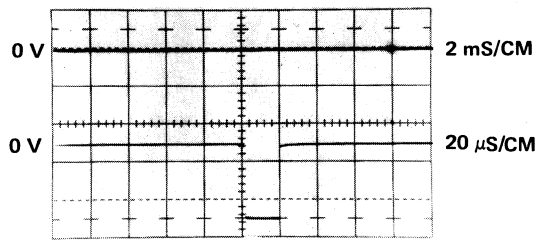

D.T.M. 8.9
10X probe to P629-10
VOLTS/CM .2

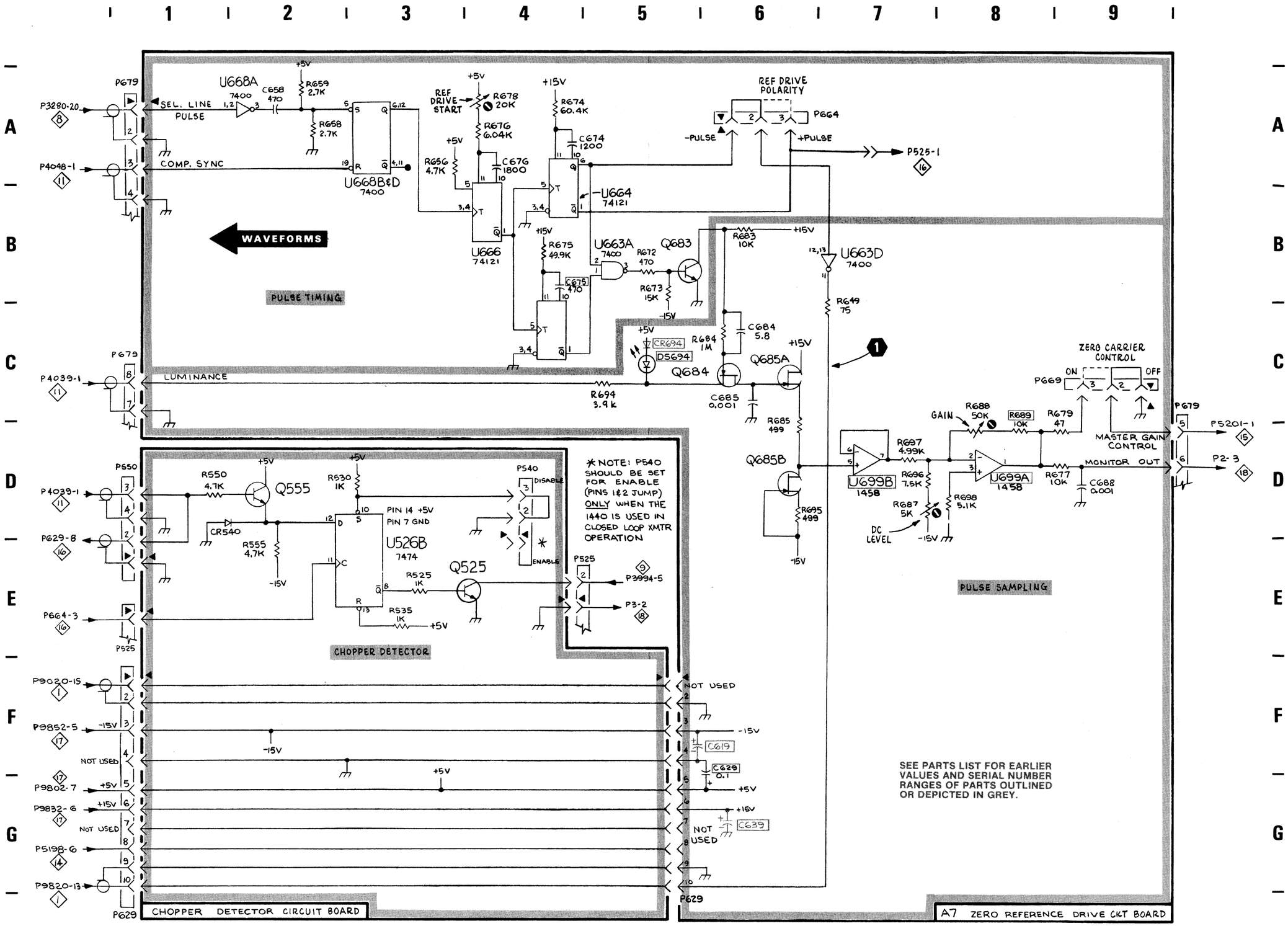
WAVEFORMS
PULSE TIMING
SEL. LINE PULSE
COMP. SYNC
LUMINANCE
U668A 7400
U668B&D 7400
U666 74121
U664 74121
U663A 7400
U663D 7400
Q683
Q684
Q685A
Q685B
REF DRIVE START
REF DRIVE POLARITY
-PULSE
+PULSE
ZERO CARRIER CONTROL
ON
OFF
GAIN
MASTER GAIN CONTROL
MONITOR OUT
DC LEVEL
U699B 1458
U699A 1458
PULSE SAMPLING
Q555
Q525
U526B 7474
PIN 14 +5V
PIN 7 GND
*NOTE: P540 SHOULD BE SET FOR ENABLE (PINS 1&2 JUMP) ONLY WHEN THE 1440 IS USED IN CLOSED LOOP XMTR OPERATION
DISABLE
ENABLE
CHOPPER DETECTOR
NOT USED
CHOPPER DETECTOR CIRCUIT BOARD
A7 ZERO REFERENCE DRIVE CKT BOARD
SEE PARTS LIST FOR EARLIER VALUES AND SERIAL NUMBER RANGES OF PARTS OUTLINED OR DEPICTED IN GREY.

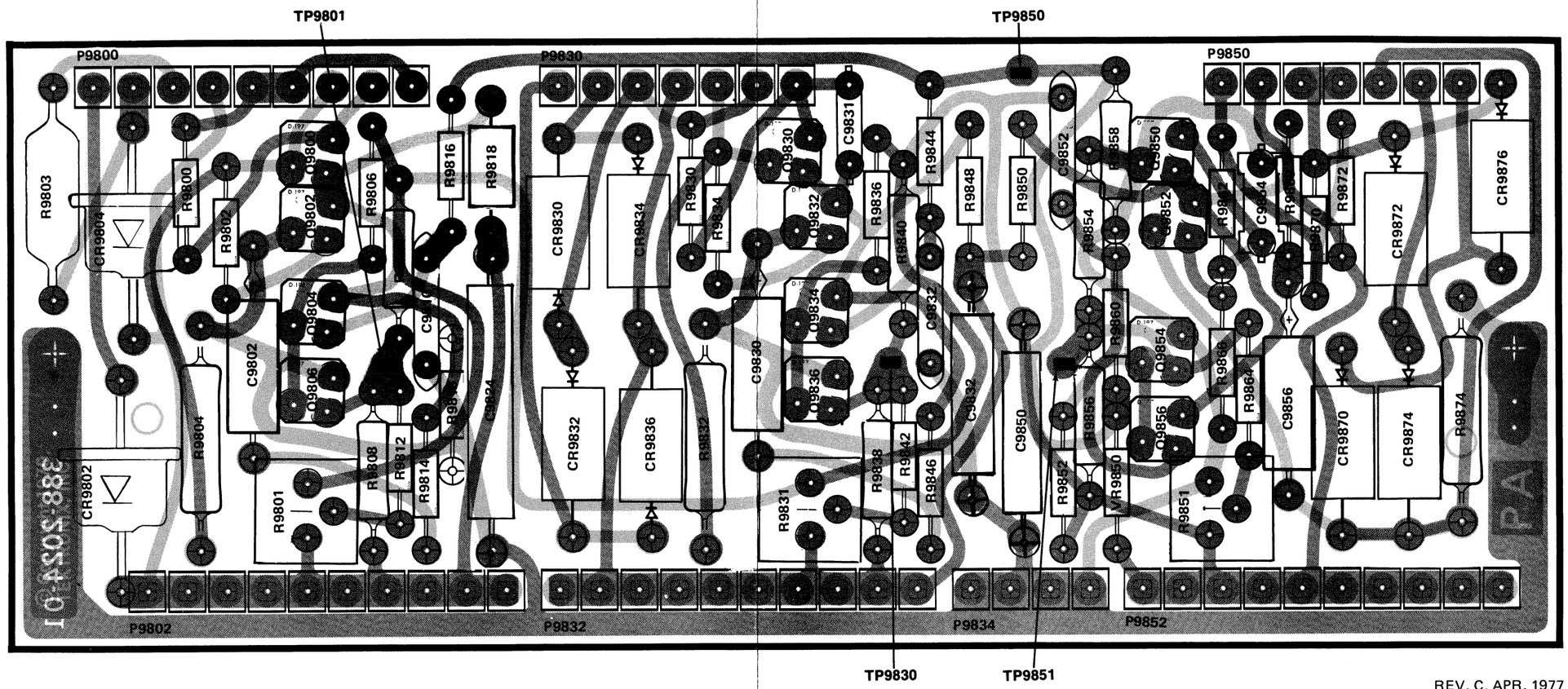

REV. C, APR. 1977

A6 POWER SUPPLY BOARD

17

PARTS LOCATING CHART

C9011	A-4	F9201*	G-2	R9814	E-7
C9042	E-4	F9201*	C-2	R9816	D-7
C9061	G-4	FL9201	G-2	R9818	C-7
C9244	E-4			R9830	B-5
C9802	E-7	Q9035	B-4	R9831	A-8
C9810	D-7	Q9055	E-4	R9832	A-6
C9812	E-9	Q9085	G-4	R9834	A-6
C9830	B-7	Q9800	E-6	R9836	A-7
C9831	B-6	Q9802	C-6	R9838	A-8
C9832	B-9	Q9804	C-7	R9840	A-8
C9840	A-7	Q9806	C-8	R9842	A-8
C9850	H-9	Q9830	B-6	R9844	A-7
C9852	G-7	Q9832	A-6	R9846	B-7
C9854	G-6	Q9834	A-7	R9848	A-7
C9856	F-6	Q9836	A-8	R9850	F-7
		Q9850	F-6	R9851	G-8
CR9802	C-5	Q9852	F-7	R9852	G-7
CR9804	D-5	Q9854	G-8	R9854	G-8
CR9830	A-5	Q9856	G-7	R9856	G-8
CR9832	A-5			R9858	G-7
CR9834	A-5	R9202*	F-2	R9860	G-7
CR9836	O-5	R9202*	C-2	R9862	G-5
CR9870	F-5	R9800	E-5	R9864	G-8
CR9872	F-5	R9801	C-8	R9866	F-7
CR9874	F-5	R9802	C-6	R9868	F-6
CR9876	F-5	R9803	D-5	R9870	G-5
VR9850	G-7	R9804	C-6	R9872	G-6
		R9806	D-7	R9874	F-6
DS9201	D-4	R9808	C-8		
DS9202*	G-2	R9810	D-8	S9201	F-2
DS9202*	G-2	R9812	C-8	S9201	C-2
				T9001	O-3

NOTE:

SEE PARTS LIST FOR SEMICONDUCTOR TYPES

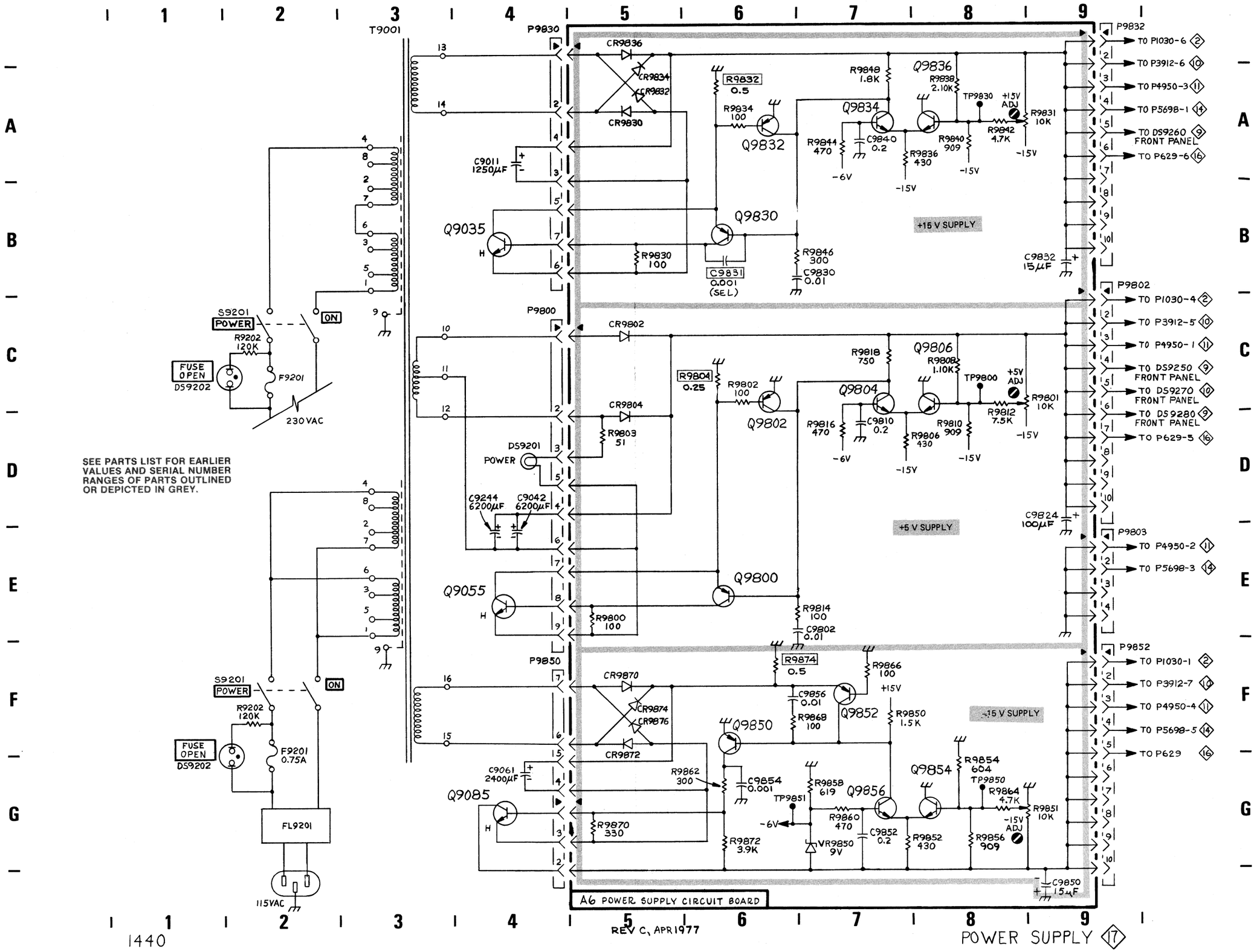
T9001
P9830
P9800
P9850
P9832
P9802
P9803
P9852
CR9836
CR9834
CR9832
CR9830
R9832 0.5
R9834 100
Q9832
Q9830
Q9035
C9011 1250µF
R9830 100
C9831 0.001 (SEL)
R9846 300
C9830 0.01
R9848 1.8K
Q9836
R9838 2.10K
Q9834
TP9930
+15V ADJ
R9831 10K
R9842 4.7K
R9844 470
C9840 0.2
R9836 430
R9840 909
-6V
-15V
+15 V SUPPLY
C9832 15µF
TO P1030-6
TO P3912-6
TO P4950-3
TO P5698-1
TO DS9260 FRONT PANEL
TO P629-6
CR9802
CR9804
R9803 51
R9804 0.25
R9802 100
Q9802
R9818 750
Q9806
R9808 1.10K
Q9804
TP9800
+5V ADJ
R9801 10K
R9812 7.5K
R9816 470
C9810 0.2
R9806 430
R9810 909
DS9201 POWER
C9244 6200µF
C9042 6200µF
Q9055
R9800 100
Q9800
R9814 100
C9802 0.01
+5 V SUPPLY
C9824 100µF
TO P1030-4
TO P3912-5
TO P4950-1
TO DS9250 FRONT PANEL
TO DS9270 FRONT PANEL
TO DS9280 FRONT PANEL
TO P629-5
TO P4950-2
TO P5698-3
CR9870
CR9874
CR9876
CR9872
R9874 0.5
R9866 100
C9856 0.01
R9868 100
Q9852
R9850 1.5K
+15V
-15 V SUPPLY
Q9850
C9061 2400µF
Q9085
R9862 300
C9854 0.001
R9858 619
Q9856
TP9851
-6V
R9860 470
C9852 0.2
VR9850 9V
R9872 3.9K
R9870 330
Q9854
R9854 604
TP9850
R9864 4.7K
R9851 10K
-15V ADJ
R9852 430
R9856 909
C9850 15µF
TO P1030-1
TO P3912-7
TO P4950-4
TO P5698-5
TO P629
A6 POWER SUPPLY CIRCUIT BOARD
S9201 POWER
ON
R9202 120K
FUSE OPEN DS9202
F9201
230VAC
F9201 0.75A
FL9201
115VAC
SEE PARTS LIST FOR EARLIER VALUES AND SERIAL NUMBER RANGES OF PARTS OUTLINED OR DEPICTED IN GREY.
REV C, APR 1977
POWER SUPPLY 17

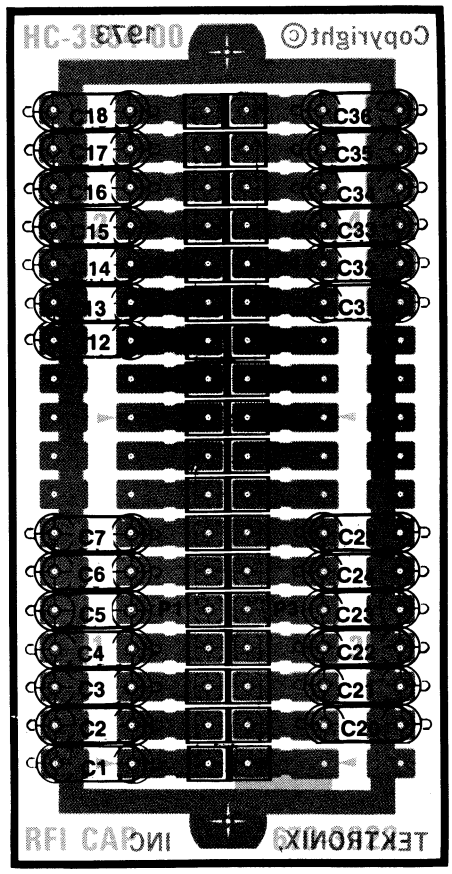

A9 RFI CAP BOARD REV. B, APR. 1977

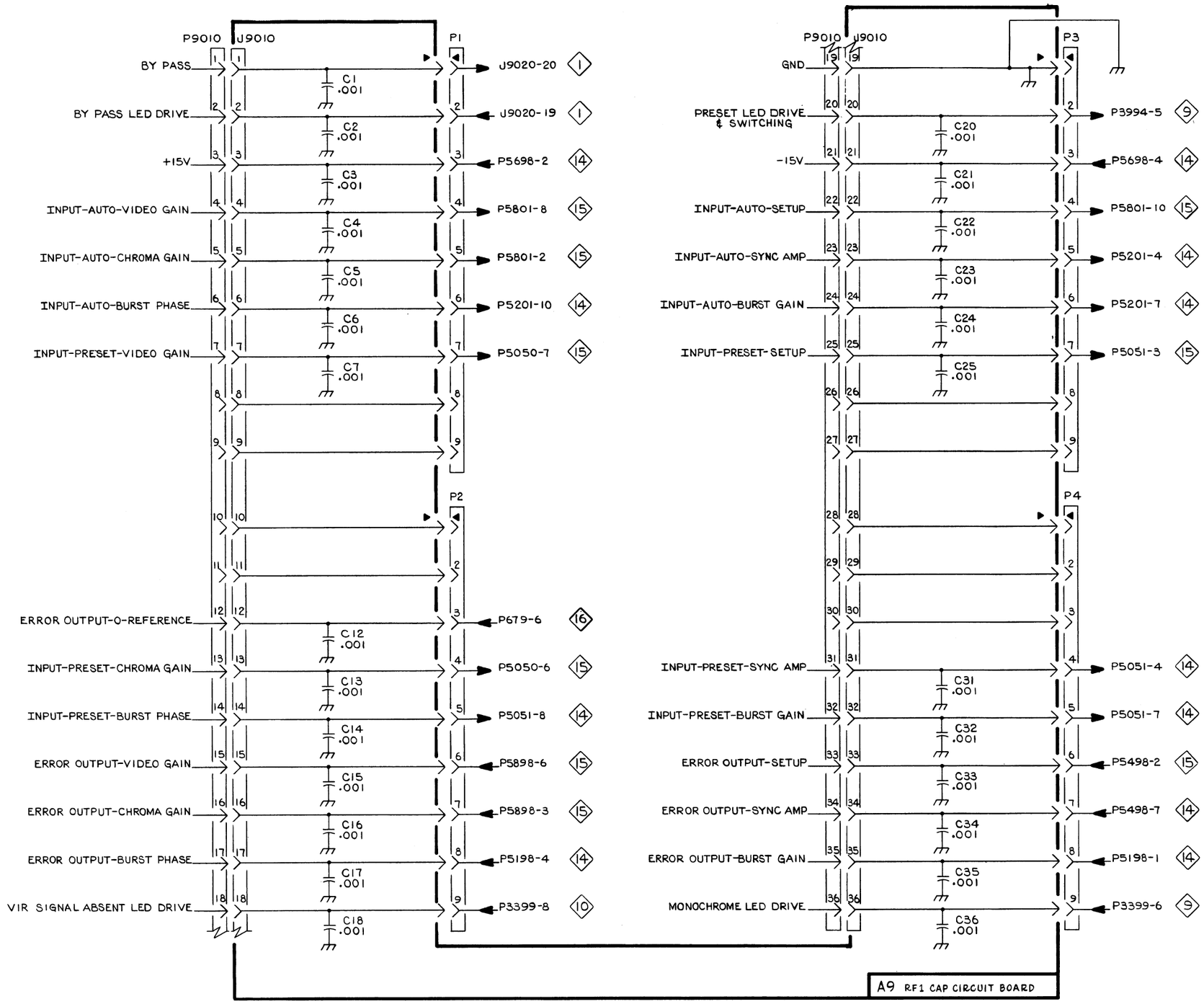
P9010
J9010
P1
BY PASS
J9020-20
BY PASS LED DRIVE
J9020-19
+15V
P5698-2
INPUT-AUTO-VIDEO GAIN
P5801-8
INPUT-AUTO-CHROMA GAIN
P5801-2
INPUT-AUTO-BURST PHASE
P5201-10
INPUT-PRESET-VIDEO GAIN
P5050-7
C1 .001
C2 .001
C3 .001
C4 .001
C5 .001
C6 .001
C7 .001
P2
ERROR OUTPUT-0-REFERENCE
P679-6
INPUT-PRESET-CHROMA GAIN
P5050-6
INPUT-PRESET-BURST PHASE
P5051-8
ERROR OUTPUT-VIDEO GAIN
P5898-6
ERROR OUTPUT-CHROMA GAIN
P5898-3
ERROR OUTPUT-BURST PHASE
P5198-4
VIR SIGNAL ABSENT LED DRIVE
P3399-8
C12 .001
C13 .001
C14 .001
C15 .001
C16 .001
C17 .001
C18 .001
P9010
J9010
P3
GND
PRESET LED DRIVE & SWITCHING
P3994-5
-15V
P5698-4
INPUT-AUTO-SETUP
P5801-10
INPUT-AUTO-SYNC AMP
P5201-4
INPUT-AUTO-BURST GAIN
P5201-7
INPUT-PRESET-SETUP
P5051-3
C20 .001
C21 .001
C22 .001
C23 .001
C24 .001
C25 .001
P4
INPUT-PRESET-SYNC AMP
P5051-4
INPUT-PRESET-BURST GAIN
P5051-7
ERROR OUTPUT-SETUP
P5498-2
ERROR OUTPUT-SYNC AMP
P5498-7
ERROR OUTPUT-BURST GAIN
P5198-1
MONOCHROME LED DRIVE
P3399-6
C31 .001
C32 .001
C33 .001
C34 .001
C35 .001
C36 .001
A9 RF1 CAP CIRCUIT BOARD

REPLACEABLE MECHANICAL PARTS

PARTS ORDERING INFORMATION

Replacement parts are available from or through your local Tektronix, Inc. Field Office or representative.

Changes to Tektronix instruments are sometimes made to accommodate improved components as they become available, and to give you the benefit of the latest circuit improvements developed in our engineering department. It is therefore important, when ordering parts, to include the following information in your order: Part number, instrument type or number, serial number, and modification number if applicable.

If a part you have ordered has been replaced with a new or improved part, your local Tektronix, Inc. Field Office or representative will contact you concerning any change in part number.

Change information, if any, is located at the rear of this manual.

SPECIAL NOTES AND SYMBOLS

X000	Part first added at this serial number
00X	Part removed after this serial number

FIGURE AND INDEX NUMBERS

Items in this section are referenced by figure and index numbers to the illustrations.

INDENTATION SYSTEM

This mechanical parts list is indented to indicate item relationships. Following is an example of the indentation system used in the description column.

1 2 3 4 5 Name & Description

Assembly and/or Component
Attaching parts for Assembly and/or Component
- - - * - - -
Detail Part of Assembly and/or Component
Attaching parts for Detail Part
- - - * - - -
Parts of Detail Part
Attaching parts for Parts of Detail Part
- - - * - - -

Attaching Parts always appear in the same indentation as the item it mounts, while the detail parts are indented to the right. Indented items are part of, and included with, the next higher indentation. The separation symbol - - - * - - - indicates the end of attaching parts.

Attaching parts must be purchased separately, unless otherwise specified.

ITEM NAME

In the Parts List, an Item Name is separated from the description by a colon (:). Because of space limitations, an Item Name may sometimes appear as incomplete. For further Item Name identification, the U.S. Federal Cataloging Handbook H6-1 can be utilized where possible.

ABBREVIATIONS

"	INCH
#	NUMBER SIZE
ACTR	ACTUATOR
ADPTR	ADAPTER
ALIGN	ALIGNMENT
AL	ALUMINUM
ASSEM	ASSEMBLED
ASSY	ASSEMBLY
ATTEN	ATTENUATOR
AWG	AMERICAN WIRE GAGE
BD	BOARD
BRKT	BRACKET
BRS	BRASS
BRZ	BRONZE
BSHG	BUSHING
CAB	CABINET
CAP	CAPACITOR
CER	CERAMIC
CHAS	CHASSIS
CKT	CIRCUIT
COMP	COMPOSITION
CONN	CONNECTOR
COV	COVER
CPLG	COUPLING
CRT	CATHODE RAY TUBE
DEG	DEGREE
DWR	DRAWER
ELCTRN	ELECTRON
ELEC	ELECTRICAL
ELCTLT	ELECTROLYTIC
ELEM	ELEMENT
EPL	ELECTRICAL PARTS LIST
EQPT	EQUIPMENT
EXT	EXTERNAL
FIL	FILLISTER HEAD
FLEX	FLEXIBLE
FLH	FLAT HEAD
FLTR	FILTER
FR	FRAME or FRONT
FSTNR	FASTENER
FT	FOOT
FXD	FIXED
GSKT	GASKET
HDL	HANDLE
HEX	HEXAGON
HEX HD	HEXAGONAL HEAD
HEX SOC	HEXAGONAL SOCKET
HLCPS	HELICAL COMPRESSION
HLEXT	HELICAL EXTENSION
HV	HIGH VOLTAGE
IC	INTEGRATED CIRCUIT
ID	INSIDE DIAMETER
IDENT	IDENTIFICATION
IMPLR	IMPELLER
IN	INCH
INCAND	INCANDESCENT
INSUL	INSULATOR
INTL	INTERNAL
LPHLDR	LAMPHOLDER
MACH	MACHINE
MECH	MECHANICAL
MTG	MOUNTING
NIP	NIPPLE
NON WIRE	NOT WIRE WOUND
OBD	ORDER BY DESCRIPTION
OD	OUTSIDE DIAMETER
OVH	OVAL HEAD
PH BRZ	PHOSPHOR BRONZE
PL	PLAIN or PLATE
PLSTC	PLASTIC
PN	PART NUMBER
PNH	PAN HEAD
PWR	POWER
RCPT	RECEPTACLE
RES	RESISTOR
RGD	RIGID
RLF	RELIEF
RTNR	RETAINER
SCH	SOCKET HEAD
SCOPE	OSCILLOSCOPE
SCR	SCREW
SE	SINGLE END
SECT	SECTION
SEMICOND	SEMICONDUCTOR
SHLD	SHIELD
SHLDR	SHOULDERED
SKT	SOCKET
SL	SLIDE
SLFLKG	SELF-LOCKING
SLVG	SLEEVING
SPR	SPRING
SQ	SQUARE
SST	STAINLESS STEEL
STL	STEEL
SW	SWITCH
T	TUBE
TERM	TERMINAL
THD	THREAD
THK	THICK
TNSN	TENSION
TPG	TAPPING
TRH	TRUSS HEAD
V	VOLTAGE
VAR	VARIABLE
W/	WITH
WSHR	WASHER
XFMR	TRANSFORMER
XSTR	TRANSISTOR

CROSS INDEX—MFR. CODE NUMBER TO MANUFACTURER

Mfr. Code	Manufacturer	Address	City, State, Zip
00779	AMP, INC.	P O BOX 3608	HARRISBURG, PA 17105
01295	TEXAS INSTRUMENTS, INC., SEMICONDUCTOR GROUP	P O BOX 5012, 13500 N CENTRAL EXPRESSWAY	DALLAS, TX 75222
02660	BUNKER RAMO CORP., CONNECTOR DIVISION	2801 S 25TH AVENUE	BROADVIEW, IL 60153
06666	GENERAL DEVICES CO., INC.	525 S. WEBSTER AVE.	INDIANAPOLIS, IN 46219
09353	C AND K COMPONENTS, INC.	103 MORSE STREET	WATERTOWN, MA 02172
09422	PLASTIC STAMPING CORPORATION	2216 W. ARMITAGE AVE.	CHICAGO, IL 60647
22526	BERG ELECTRONICS, INC.	YOUK EXPRESSWAY	NEW CUMBERLAND, PA 17070
24931	SPECIALTY CONNECTOR CO., INC.	3560 MADISON AVE.	INDIANAPOLIS, IN 46227
71785	TRW, CINCH CONNECTORS	1501 MORSE AVENUE	ELK GROVE VILLAGE, IL 60007
73743	FISCHER SPECIAL MFG. CO.	446 MORGAN ST.	CINCINNATI, OH 45206
73803	TEXAS INSTRUMENTS, INC., METALLURGICAL MATERIALS DIV.	34 FOREST STREET	ATTLEBORO, MA 02703
75915	LITTELFUSE, INC.	800 E. NORTHWEST HWY	DES PLAINES, IL 60016
77250	PHEOLL MANUFACTURING CO., DIVISION OF ALLIED PRODUCTS CORP.	5700 W. ROOSEVELT RD.	CHICAGO, IL 60650
77820	BENDIX CORP., THE, ELECTRICAL COMPONENTS DIVISION	SHERMAN AVE.	SIDNEY, NY 13838
78189	ILLINOIS TOOL WORKS, INC. SHAKEPROOF DIVISION	ST. CHARLES ROAD	ELGIN, IL 60120
79136	WALDES, KOHINOOR, INC.	47-16 AUSTEL PLACE	LONG ISLAND CITY, NY 11101
80009	TEKTRONIX, INC.	P O BOX 500	BEAVERTON, OR 97077
80033	PRESTOLE EVERLOCK, INC.	P. O. BOX 278,1345 MIAMI ST.	TOLEDO, OH 43605
82647	TEXAS INSTRUMENTS, INC., CONTROL PRODUCTS DIV.	34 FOREST ST.	ATTLEBORO, MA 02703
83385	CENTRAL SCREW CO.	2530 CRESCENT DR.	BROADVIEW, IL 60153
91929	HONEYWELL, INC., MICRO SWITCH DIV.	CHICAGO & SPRING STS.	FREEPORT, IL 61032
98291	SEALECTRO CORP.	225 HOYT	MAMARONECK, NY 10544

Fig. & Index No.	Tektronix Part No.	Serial/Model No. Eff	Dscont	Qty	1 2 3 4 5 Name & Description	Mfr Code	Mfr Part Number
1-1	390-0360-00			2	COVER:TOP/BOTTOM	80009	390-0360-00
	214-0816-00			10	. LATCH ASSEMBLY:	80009	214-0816-00
-2	386-1151-00			1	. . CLAMP,RIM CLENC:SPG STL CD PL	80009	386-1151-00
-3	386-0227-00			1	. . STOP,CLP,RIM CL:ACETAL	80009	386-0227-00
	214-0603-02			1	. . PIN ASSY,SECRG:	80009	214-0603-02
-4	214-0604-00			1	. . . WASH.,SPG TNSN:0.26 ID X 0.47 INCH OD	80009	214-0604-00
-5	214-0603-01			1	. . . PIN,SECURING:0.27 INCH LONG	80009	214-0603-01
-6	213-0216-00			2	THUMBSCREW:10-32 X 0.75 INCH LONG SST	80009	213-0216-00
-7	354-0025-00			2	RING,RETAINING:0.181 INCH FREE ID	79136	5555-18
-8	210-0894-00			2	WASHER,NONMETAL:0.19 ID X 0.438" OD,PLSTC	09422	OBD
-9	367-0110-00			2	HANDLE,CARRYING:0.375 OD X 3.0 L X 1.75"H	80009	367-0110-00
					(ATTACHING PARTS FOR EACH)		
-10	212-0574-00			2	SCREW,MACHINE:10-32 X 0.438"100 DEG FLH STL	83385	OBD
					- - - * - - -		
-11	124-0259-01			2	STRIP,TRIM:FRONT	80009	124-0259-01
-12	407-0960-03			2	BRACKET,ANGLE:RACKMOUNT,ALUMINUM	80009	407-0960-03
					(ATTACHING PARTS FOR EACH)		
-13	212-0070-00			2	SCREW,MACHINE:8-32 X 0.312"100 DEG,FLH STL	83385	OBD
					- - - * - - -		
-14	351-0104-00	B010100	B060565	1	SLIDE SECT.,DWR:PAIR	06666	C-720-2
	351-0104-03	B060566		1	SLIDE SECT,DWR:12.625 L,W/O HARDWARE	06666	C-720-2
					(ATTACHING PARTS)		
-15	212-0004-00			4	SCREW,MACHINE:8-32 X 0.312 INCH,PNH STL	83385	OBD
					- - - * - - -		
-16	----- -----			3	TRANSISTOR:(SEE Q9035,Q9055,Q9085 EPL)		
					(ATTACHING PARTS FOR EACH)		
-17	211-0038-00			1	SCREW,MACHINE:4-40 X 0.314,FLH,100 DEG	83385	OBD
-18	210-0586-00			1	NUT,PLAIN,EXT W:4-40 X 0.25 INCH,STL	78189	211-041800-00
-19	342-0163-00			1	INSULATOR,PLATE:XSTR,0.675 X 0.625 X 0.001"	80009	342-0163-00
					- - - * - - -		
-20	426-1025-00			1	FRAME SECT,CAB.:RIGHT	80009	426-1025-00
					(ATTACHING PARTS)		
-21	212-0040-00			6	SCREW,MACHINE:8-32 X 0.375 100 DEG,FLH STL	83385	OBD
-22	211-0538-00			3	SCREW,MACHINE:6-32 X 0.312"100 DEG,FLH STL	83385	OBD
-23	210-0457-00			3	NUT,PLAIN,EXT W:6-32 X 0.312 INCH,STL	83385	OBD
					- - - * - - -		
-24	426-1026-00			1	FRAME SECT,CAB.:LEFT	80009	426-1026-00
					(ATTACHING PARTS)		
-25	212-0040-00			6	SCREW,MACHINE:8-32 X 0.375 100 DEG,FLH STL	83385	OBD
-26	211-0538-00			4	SCREW,MACHINE:6-32 X 0.312"100 DEG,FLH STL	83385	OBD
	210-0457-00			4	NUT,PLAIN,EXT W:6-32 X 0.312 INCH,STL	83385	OBD
					- - - * - - -		
-27	124-0252-01			2	STRIP,TRIM:CORNER	80009	124-0252-01
-28	426-0763-04			4	FRAME SECT,CAB.:CORNER	80009	426-0763-04
					(ATTACHING PARTS FOR EACH)		
-29	212-0040-00			2	SCREW,MACHINE:8-32 X 0.375 100 DEG,FLH STL	83385	OBD
					- - - * - - -		
-30	260-0834-00			1	SWITCH,TOGGLE:DPDT,5A,125VAC,0.25-40 THD	09353	U21-SHZQE
-31	131-0779-00			2	JACK,TIP:FOR 0.08 INCH DIA TEST POINT	98291	016-8010-00-0208
-32	352-0362-00			1	FUSEHOLDER: W/MOUNTING HARDWARE	75915	345001
-33	358-0301-00			2	BUSHING,SLEEVE:FOR 0.185 DIA HOLE,GRAY	80009	358-0301-00
-34	333-1721-00			1	PANEL,FRONT:	80009	333-1721-00
					(ATTACHING PARTS)		
	342-0444-00	XB060965		1	INSUL,SW HANDLE:GRAY VINYL	91929	8Z0114
-35	210-0457-00			3	NUT,PLAIN,EXT W:6-32 X 0.312 INCH,STL	83385	OBD
					- - - * - - -		
-36	----- -----			2	RES,VAR,NONWIRE:(SEE R9210/R9215 EPL)		
					(ATTACHING PARTS FOR EACH)		
-37	358-0422-00			1	BSHG,MACH.THD:0.25-32 X 0.187" LONG BRS	80009	358-0422-00
-38	220-0484-00			1	NUT,PLAIN,HEX.:0.25-32 X 0.375 INCH AL	80009	220-0484-00
					- - - * - - -		
-39	200-0935-00			1	BASE,LAMPHOLDER:0.29 OD X 0.19 CASE	80009	200-0935-00
-40	378-0602-00			1	LENS,LIGHT:GREEN	80009	378-0602-00
-41	352-0157-01			1	LAMPHOLDER:BLACK PLASTIC	80009	352-0157-01

Fig. & Index No.	Tektronix Part No.	Serial/Model No. Eff	Dscont	Qty	1 2 3 4 5	Name & Description	Mfr Code	Mfr Part Number
1 -42	200-0609-00			1		BASE,LAMPHOLDER:0.4 OD X 0.16"L,GRAY PLSTC	80009	200-0609-00
-43	378-0541-00			1		LENS,LIGHT:FROSTED	80009	378-0541-00
-44	352-0084-00			1		HOLDER,NEON:0.374 OD X 0.656 INCH LONG	80009	352-0084-00
-45	386-2584-00			1		SUBPANEL,FRONT:	80009	386-2584-00
						(ATTACHING PARTS)		
-46	211-0538-00			4		SCREW,MACHINE:6-32 X 0.312"100 DEG,FLH STL	83385	OBD
-47	210-0457-00			4		NUT,PLAIN,EXT W:6-32 X 0.312 INCH,STL	83385	OBD
						- - - * - - -		
-48	386-2195-00			2		SUPPORT,CHASSIS:MAIN	80009	386-2195-00
						(ATTACHING PARTS)		
-49	211-0504-00			2		SCREW,MACHINE:6-32 X 0.25 INCH,PNH STL	83385	OBD
-50	210-0202-00			1		TERMINAL,LUG:0.146 ID,LOCKING,BRZ TINNED	78189	2104-06-00-2520N
						- - - * - - -		

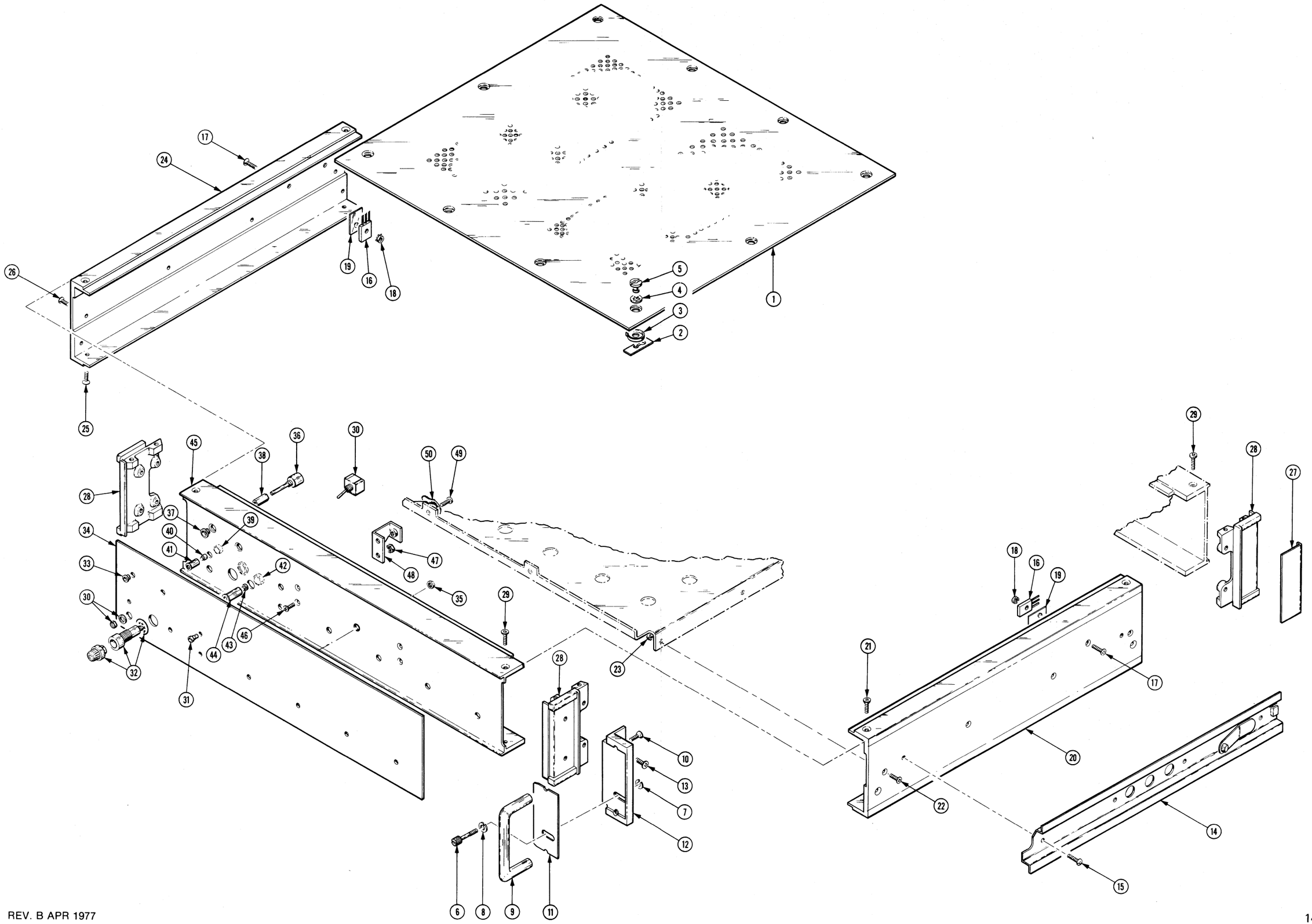

FIG. 1. FRONT & FRAME

FIG. 2. CHASSIS & REAR

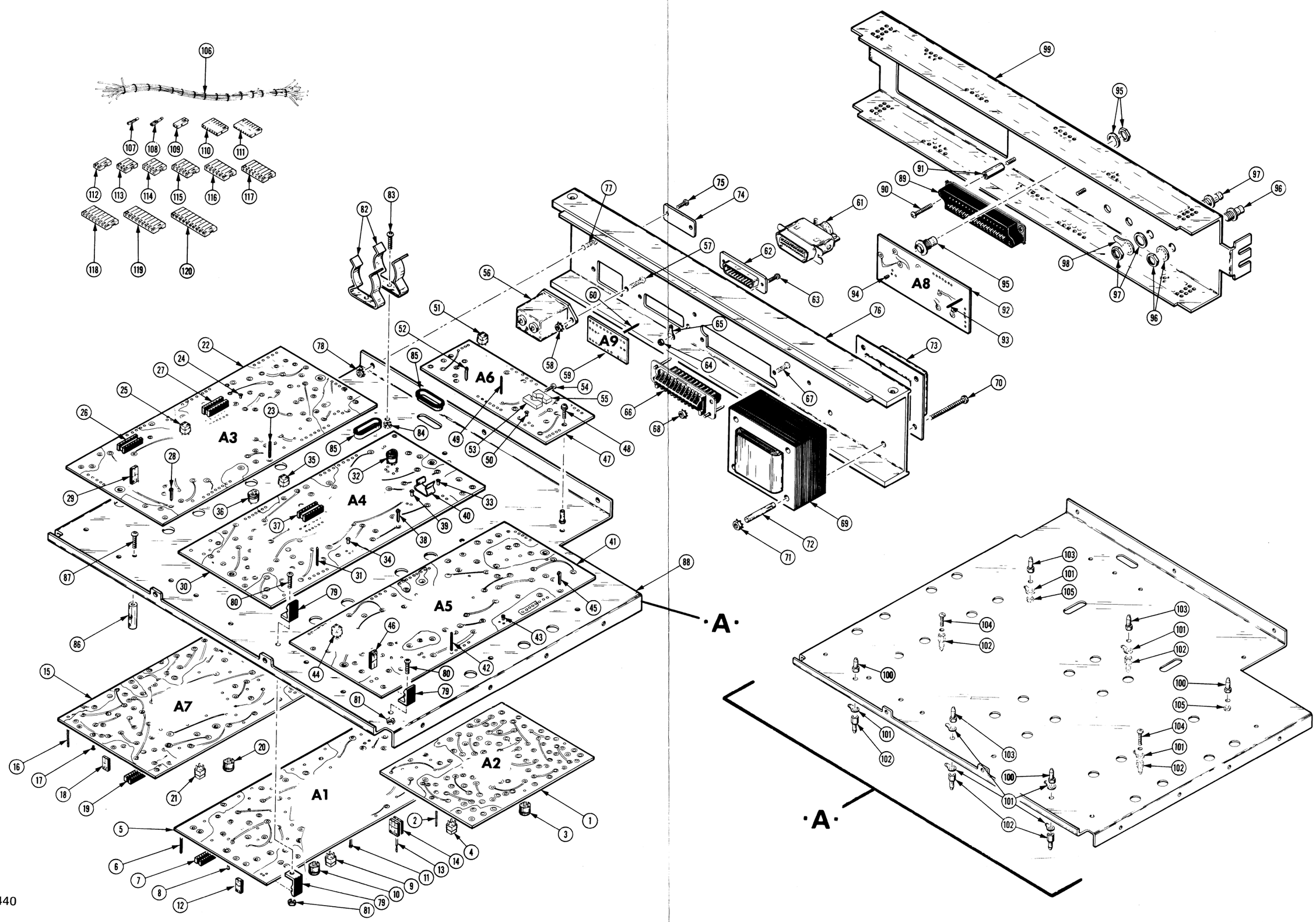

Fig. & Index No.	Tektronix Part No.	Serial/Model No. Eff	Dscont	Qty	1 2 3 4 5 Name & Description	Mfr Code	Mfr Part Number
2-1	----- -----			1	CKT BOARD ASSY:FILTER(SEE A2 EPL)		
-2	131-0589-00			11	. TERM,PIN:0.46 L X 0.025 SQ.PH BRZ GL	22526	47350
-3	136-0220-00			2	. SKT,PL-IN ELEK:TRANSISTOR 3 CONTACT,PCB MT	71785	133-23-11-034
-4	136-0183-00			2	. SOCKET,PLUG-IN:3 PIN,ROUND	80009	136-0183-00
	136-0352-00			4	. CONTACT,ELEC:FOR 0.02 INCH DIAMETER PIN	00779	50462-7
-5	----- -----			1	CKT BOARD ASSY:SIGNAL PRCS(SEE A1 EPL)		
-6	131-0589-00			1	. TERM,PIN:0.46 L X 0.025 SQ.PH BRZ GL	22526	47350
	131-0608-00			21	. TERMINAL,PIN:0.365 L X 0.25 PH,BRZ,GOLD PL	22526	47357
-7	136-0260-02			3	. SOCKET,PLUG-IN:16 CONTACT,LOW CLEARANCE	82647	C9316-18
-8	136-0252-04	B010100	B030279	93	. SOCKET,PIN TERM:U/W 0.016-0.018 DIA PINS	22526	75060-007
-9	136-0220-00	B030280		29	. SKT,PL-IN ELEK:TRANSISTOR 3 CONTACT,PCB MT	71785	133-23-11-034
-10	136-0183-00	B030280		2	. SOCKET,PLUG-IN:3 PIN,ROUND	80009	136-0183-00
-11	214-0579-00			4	. TERM,TEST POINT:BRS CD PL	80009	214-0579-00
-12	131-0993-00			5	. BUS,CONDUCTOR:2 WIRE BLACK	00779	530153-2
	198-2891-00			1	. WIRE KIT,ELEC:	80009	198-2891-00
-13	131-0707-00			6	. . CONNECTOR,TERM.:22-26 AWG,BRS& CU BE GOLD	22526	47439
-14	352-0177-00			1	. . CONN BODY,PL,EL:6 WIRE,DBL ROW BLACK	80009	352-0177-00
-15	----- -----			1	CKT BOARD ASSY:ZERO REFERENCE(SEE A7 EPL)		
-16	131-0589-00			18	. TERM,PIN:0.46 L X 0.025 SQ.PH BRZ GL	22526	47350
	131-0608-00			6	. TERMINAL,PIN:0.365 L X 0.25 PH,BRZ,GOLD PL	22526	47357
-17	136-0252-04			8	. SOCKET,PIN TERM:U/W 0.016-0.018 DIA PINS	22526	75060-007
-18	131-0993-00			2	. BUS,CONDUCTOR:2 WIRE BLACK	00779	530153-2
-19	136-0269-02			5	. SOCKET,PLUG-IN:14 CONTACT,LOW CLEARANCE	01295	C95140
	136-0514-00			1	. SKT,PL-IN ELEC:MICROCIRCUIT,8 DIP	73803	CS9002-8
-20	136-0183-00			1	. SOCKET,PLUG-IN:3 PIN,ROUND	80009	136-0183-00
-21	136-0220-00			2	. SKT,PL-IN ELEK:TRANSISTOR 3 CONTACT,PCB MT	71785	133-23-11-034
-22	----- -----			1	CKT BOARD ASSY:TIMING(SEE A3 EPL)		
-23	131-0589-00			60	. TERM,PIN:0.46 L X 0.025 SQ.PH BRZ GL	22526	47350
	131-0608-00			15	. TERMINAL,PIN:0.365 L X 0.25 PH,BRZ,GOLD PL	22526	47357
-24	136-0252-04	B010100	B030279	130	. SOCKET,PIN TERM:U/W 0.016-0.018 DIA PINS	22526	75060-007
-25	136-0220-00	B030280		37	. SKT,PL-IN ELEK:TRANSISTOR 3 CONTACT,PCB MT	71785	133-23-11-034
-26	136-0260-02			7	. SOCKET,PLUG-IN:16 CONTACT,LOW CLEARANCE	82647	C9316-18
-27	136-0269-02			21	. SOCKET,PLUG-IN:14 CONTACT,LOW CLEARANCE	01295	C95140
	136-0514-00			2	. SKT,PL-IN ELEC:MICROCIRCUIT,8 DIP	73803	CS9002-8
-28	214-0579-00			4	. TERM,TEST POINT:BRS CD PL	80009	214-0579-00
-29	131-0993-00			2	. BUS,CONDUCTOR:2 WIRE BLACK	00779	530153-2
-30	----- -----			1	CKT BOARD ASSY:DECODER(SEE A4 EPL)		
-31	131-0589-00			30	. TERM,PIN:0.46 L X 0.025 SQ.PH BRZ GL	22526	47350
	131-0608-00			4	. TERMINAL,PIN:0.365 L X 0.25 PH,BRZ,GOLD PL	22526	47357
-32	136-0241-00			3	. SOCKET,PLUG-IN:10 CONTACT,ROUND	71785	133-99-12-064
-33	136-0674-00			2	. SKT,PIN TERM.:FOR 0.048 DIA PIN	00779	1-380758-0
-34	136-0252-04	B010100	B030279	240	. SOCKET,PIN TERM:U/W 0.016-0.018 DIA PINS	22526	75060-007
-35	136-0220-00	B030280	B059999	48	. SKT,PL-IN ELEK:TRANSISTOR 3 CONTACT,PCB MT	71785	133-23-11-034
	136-0220-00	B060000		44	. SKT,PL-IN ELEK:TRANSISTOR 3 CONTACT,PCB MT	71785	133-23-11-034
-36	136-0235-00	B030280	B059999	6	. SOCKET,PLUG-IN:6 CONTACT,ROUND	71785	133-96-12-062
	136-0252-04	B060000		48	. SOCKET,PIN TERM:U/W 0.016-0.018 DIA PINS	22526	75060-007
-37	136-0269-02			1	. SOCKET,PLUG-IN:14 CONTACT,LOW CLEARANCE	01295	C95140
	136-0514-00			6	. SKT,PL-IN ELEC:MICROCIRCUIT,8 DIP	73803	CS9002-8
-38	214-0579-00			5	. TERM,TEST POINT:BRS CD PL	80009	214-0579-00
-39	136-0234-00			2	. SOCKET,PIN TERM:0.088 OD X 0.247 INCH L	00779	380598-1
-40	352-0096-00			1	. CLIP,SPR,TNSN:CRYSTAL	80009	352-0096-00
	198-2889-00			1	. WIRE KIT,ELEC:	80009	198-2889-00
-41	----- -----			1	CKT BOARD ASSY:ERROR AMPL(SEE A5 EPL)		
-42	131-0589-00			60	. TERM,PIN:0.46 L X 0.025 SQ.PH BRZ GL	22526	47350
	131-0608-00			3	. TERMINAL,PIN:0.365 L X 0.25 PH,BRZ,GOLD PL	22526	47357
-43	136-0252-04	B010100	B030279	173	. SOCKET,PIN TERM:U/W 0.016-0.018 DIA PINS	22526	75060-007
-44	136-0220-00	B030280		19	. SKT,PL-IN ELEK:TRANSISTOR 3 CONTACT,PCB MT	71785	133-23-11-034
	136-0352-00			4	. CONTACT,ELEC:FOR 0.02 INCH DIAMETER PIN	00779	50462-7
	136-0514-00			14	. SKT,PL-IN ELEC:MICROCIRCUIT,8 DIP	73803	CS9002-8
-45	214-0579-00			7	. TERM,TEST POINT:BRS CD PL	80009	214-0579-00
-46	131-0993-00			1	. BUS,CONDUCTOR:2 WIRE BLACK	00779	530153-2
-47	----- -----			1	CKT BOARD ASSY:POWER SUPPLY(SEE A6 EPL)		
					(ATTACHING PARTS)		
-48	211-0116-00			2	SCR,ASSEM WSHR:4-40 X 0.312 INCH,PNH BRS	83385	OBD

- - - * - - -

Fig. & Index No.	Tektronix Part No.	Serial/Model No. Eff	Dscont	Qty	1 2 3 4 5 Name & Description	Mfr Code	Mfr Part Number
2-	----- -----			-	. CKT BOARD ASSY INCLUDES:		
-49	131-0589-00			57	. TERM,PIN:0.46 L X 0.025 SQ.PH BRZ GL	22526	47350
-50	136-0252-04	B010100	B030279	36	. SOCKET,PIN TERM:U/W 0.016-0.018 DIA PINS	22526	75060-007
-51	136-0220-00	B030280		12	. SKT,PL-IN ELEK:TRANSISTOR 3 CONTACT,PCB MT	71785	133-23-11-034
-52	214-0579-00			4	. TERM,TEST POINT:BRS CD PL	80009	214-0579-00
-53	200-0945-01			1	. COVER,HALF XSTR:DUAL TO-18,W/2-56 THD	80009	200-0945-01
					(ATTACHING PARTS)		
-54	211-0001-00			1	. SCREW,MACHINE:2-56 X 0.25 INCH,PNH STL	83385	OBD
					- - - * - - -		
-55	200-0945-00			1	. COVER,HALF XSTR:DUAL TO-18,ALUMINUM	80009	200-0945-00
-56	----- -----			1	LINE FILTER(SEE FL9201 EPL)		
					(ATTACHING PARTS)		
-57	211-0012-00			2	SCREW,MACHINE:4-40 X 0.375 INCH,PNH STL	83385	OBD
-58	210-0586-00			2	NUT,PLAIN,EXT W:4-40 X 0.25 INCH,STL	78189	211-041800-00
					- - - * - - -		
-59	----- -----			1	CKT BOARD ASSY:R.F.I CAPACITOR(SEE A9 EPL)		
-60	131-0665-00			36	. TERMINAL,PIN:0.88 L X 0.025 SQUARE	22526	47358
-61	131-0293-00			1	CONNECTOR,PLUG,:36 PIN CABLE PLUG,MALE	02660	57-30360
-62	131-0294-00			1	CONNECTOR,RCPT,:36 PIN FEMALE	02660	57-40360
					(ATTACHING PARTS)		
-63	211-0062-00			2	SCREW,MACHINE:2-56 X 0.312 INCH,RDH STL	83385	OBD
-64	210-0405-00			2	NUT,PLAIN,HEX.:2-56 X 0.188 INCH,BRS	73743	2X12157-402
-65	210-0259-00			2	TERMINAL,LUG:0.099"ID INT TOOTH,SE	80009	210-0259-00
					- - - * - - -		
-66	131-0096-00			1	CONNECTOR,RCPT,:32 CONTACT,MAL	02660	26-159-32
					(ATTACHING PARTS)		
-67	211-0012-00			2	SCREW,MACHINE:4-40 X 0.375 INCH,PNH STL	83385	OBD
-68	210-0586-00			2	NUT,PLAIN,EXT W:4-40 X 0.25 INCH,STL	78189	211-041800-00
					- - - * - - -		
-69	----- -----			1	TRANSFORMER:(SEE T9001 EPL)		
					(ATTACHING PARTS)		
-70	212-0516-00			4	SCREW,MACHINE:10-32 X 2 INCH,HEX HD STL	77250	OBD
-71	220-0410-00			4	NUT,EXTENDED WA:10-32 X 0.375 INCH,STL	83385	OBD
-72	166-0227-00			4	INS SLV,ELEC:0.187 ID X 1.50 INCH LONG	80009	166-0227-00
-73	200-0379-03			1	COVER,XFMR:HALF SHELL	80009	200-0379-03
					- - - * - - -		
-74	200-1345-01			1	COV,CONN MTG HO:FOR 24 PIN CONNECTOR	80009	200-1345-01
					(ATTACHING PARTS)		
-75	211-0147-00			2	SCREW,MACHINE:4-40 X 0.25 INCH,PNH STL	83385	OBD
	210-0586-00			2	NUT,PLAIN,EXT W:4-40 X 0.25 INCH,STL	78189	211-041800-00
					- - - * - - -		
-76	386-2585-00			1	PANEL,REAR:	80009	386-2585-00
					(ATTACHING PARTS)		
-77	211-0507-00			3	SCREW,MACHINE:6-32 X 0.312 INCH,PNH STL	83385	OBD
-78	210-0457-00			3	NUT,PLAIN,EXT W:6-32 X 0.312 INCH,STL	83385	OBD
					- - - * - - -		
-79	344-0133-00	B010100	B049999	32	CLIP,SPR,TNSN:CIRCUIT CARD MOUNTING	80009	344-0133-00
	344-0131-00	B050000		32	CLIP,SPG TENS:CIRCUIT CARD MOUNTING	80009	344-0131-00
					(ATTACHING PARTS)		
-80	211-0097-00			16	SCREW,MACHINE:4-40 X 0.312 INCH,PNH STL	83385	OBD
-81	210-0586-00			16	NUT,PLAIN,EXT W:4-40 X 0.25 INCH,STL	78189	211-041800-00
					- - - * - - -		
-82	344-0118-00			8	CLIP,SPG TENS:CAPACITOR MTG	80033	E50008-044
					(ATTACHING PARTS)		
-83	211-0504-00			8	SCREW,MACHINE:6-32 X 0.25 INCH,PNH STL	83385	OBD
-84	210-0457-00			8	NUT,PLAIN,EXT W:6-32 X 0.312 INCH,STL	83385	OBD
	210-0202-00			1	TERMINAL,LUG:0.146 ID,LOCKING,BRZ TINNED	78189	2104-06-00-2520N
					- - - * - - -		
-85	348-0253-00			3	GROMMET,PLASTIC:BLACK,OBLONG,3.OXO.925	80009	348-0253-00
-86	385-0135-00			3	INSULATOR,STDF:0.938 L X 0.312 OD,DELRIN	80009	385-0135-00
					(ATTACHING PARTS FOR EACH)		
-87	211-0507-00			1	SCREW,MACHINE:6-32 X 0.312 INCH,PNH STL	83385	OBD
					- - - * - - -		

Fig. & Index No.	Tektronix Part No.	Serial/Model No. Eff	Dscont	Qty	1 2 3 4 5 Name & Description	Mfr Code	Mfr Part Number
2-88	441-1157-00			1	CHAS,ELEC EQPT:MAIN	80009	441-1157-00
-89	131-0097-00			1	CONNECTOR,RCPT,:32 CONTACT,FEMALE	02660	26-190-32
					(ATTACHING PARTS)		
-90	211-0014-00			2	SCREW,MACHINE:4-40 X 0.50 INCH,PNH STL	83385	OBD
-91	129-0371-00			2	POST,ELEC-MECH:HEX,0.25 X 0.72 INCH LONG	80009	129-0371-00
					- - - * - - -		
-92	----- -----			1	CKT BOARD ASSY:RELAY(SEE A8 EPL)		*
-93	131-0589-00			10	. TERM,PIN:0.46 L X 0.025 SQ.PH BRZ GL	22526	47350
-94	136-0252-04	B010100	B050449	11	. SOCKET,PIN TERM:U/W 0.016-0.018 DIA PINS	22526	75060-007
	136-0220-00	B050450		1	SKT,PL-IN ELEK:TRANSISTOR 3 CONTACT,PCB MT	71785	133-23-11-034
-95	131-1097-00			2	CONNECTOR,RCPT,:BNC,FEMALE,CKT CARD MT	24931	28JR220-2
-96	131-0126-00			2	CONNECTOR,RCPT,:BNC,FEMALE	77820	9663-1 NT-34
-97	131-0126-00			2	CONNECTOR,RCPT,:BNC,FEMALE	77820	9663-1 NT-34
					(ATTACHING PARTS FOR EACH)		
-98	210-0241-00			1	TERMINAL,LUG:0.515 ID X 0.625 INCH OD SE	80009	210-0241-00
					- - - * - - -		
-99	441-1158-00	B010100	B060519	1	CHAS,ELEC EQPT:INTERFACE	80009	441-1158-00
	441-1158-01	B060520		1	CHAS,VIDEO CORR:INTERFACE	80009	441-1158-01
-100	214-1621-00	B010100	B049999	3	PIN,GUIDE:0.74 INCH LONG	80009	214-1621-00
	214-2220-00	B050000		3	PIN,GUIDE:0.250 HEX HEAD,5.765 INCH L	80009	214-2220-00
-101	210-0202-00			8	TERMINAL,LUG:0.146 ID,LOCKING,BRZ TINNED	78189	2104-06-00-2520N
-102	214-1696-00	B010100	B049999	6	PIN,GUIDE:0.50 INCH LONG	80009	214-1696-00
	214-2220-00	B050000		2	PIN,GUIDE:0.250 HEX HEAD,5.765 INCH L	80009	214-2220-00
	214-2151-00	B050000		4	PIN,GUIDE:0.250 HEX,W/4-40 OPP 6-32	80009	214-2151-00
-103	214-1169-00	B010100	B049999	3	PIN,GUIDE:0.80 INCH LONG	80009	214-1169-00
	214-2220-00	B050000		3	PIN,GUIDE:0.250 HEX HEAD,5.765 INCH L	80009	214-2220-00
-104	211-0504-00	B010100	B049999	2	SCREW,MACHINE:6-32 X 0.25 INCH,PNH STL	83385	OBD
	211-0504-00	B050000		4	SCREW,MACHINE:6-32 X 0.25 INCH,PNH STL	83385	OBD
-105	210-0457-00	B010100	B049999X	2	NUT,PLAIN,EXT W:6-32 X 0.312 INCH,STL	83385	OBD
-106	179-1899-00	B010100	B060371	1	WIRING HARNESS,:MAIN	80009	179-1899-00
	179-1899-01	B060372		1	WIRING HARNESS,:CHASSIS	80009	179-1899-01
-107	131-0707-00			34	. CONNECTOR,TERM.:22-26 AWG,BRS& CU BE GOLD	22526	47439
-108	131-0792-00			17	. CONNECTOR,TERM:18-20 AWG,CU BE GOLD PL	22526	46221
	131-0621-00			131	. CONNECTOR,TERM:22-26 AWG,BRS& CU BE GOLD	22526	46231
	131-0622-00			17	. CONTACT,ELEC:0.577"L,28-32 AWG WIRE	22526	46241
-109	352-0169-00			4	. HLDR,TERM CONN:2 WIRE BLACK	80009	352-0169-00
-110	352-0164-00			2	. CONN BODY,PL,EL:6 WIRE BLACK	80009	352-0164-00
-111	352-0165-00			2	. CONN BODY,PL,EL:7 WIRE BLACK	80009	352-0165-00
-112	352-0198-00			4	. HLDR,TERM CONN:2 WIRE BLACK	80009	352-0198-00
-113	352-0199-00			2	. CONN BODY,PL,EL:3 WIRE BLACK	80009	352-0199-00
-114	352-0200-00			3	. HLDR,TERM CONN:4 WIRE BLACK	80009	352-0200-00
-115	352-0201-00			5	. CONN BODY,PL,EL:5 WIRE BLACK	80009	352-0201-00
-116	352-0202-00			3	. HLDR,TERM CONN:6 WIRE BLACK	80009	352-0202-00
-117	352-0203-00			3	. HLDR,TERM CONN:7 WIRE BLACK	80009	352-0203-00
-118	352-0204-00			5	. CONN BODY,PL,EL:8 WIRE BLACK	80009	352-0204-00
-119	352-0205-00			2	. CONN BODY,PL,EL:9 WIRE BLACK	80009	352-0205-00
-120	352-0206-00			6	. HLDR,TERM CONN:10 WIRE BLACK	80009	352-0206-00
	179-1900-00			1	WIRING HARNESS,:POWER	80009	179-1900-00
	131-0621-00			21	. CONNECTOR,TERM:22-26 AWG,BRS& CU BE GOLD	22526	46231
	352-0203-00			2	. HLDR,TERM CONN:7 WIRE BLACK	80009	352-0203-00
	352-0205-00			1	. CONN BODY,PL,EL:9 WIRE BLACK	80009	352-0205-00
	179-1901-00			1	WIRING HARNESS,:AC	80009	179-1901-00
	179-1902-00			1	WIRING HARNESS,:RELAY	80009	179-1902-00
	131-0792-00			3	. CONNECTOR,TERM:18-20 AWG,CU BE GOLD PL	22526	46221
	131-0621-00			4	. CONNECTOR,TERM:22-26 AWG,BRS& CU BE GOLD	22526	46231
	131-0622-00			3	. CONTACT,ELEC:0.577"L,28-32 AWG WIRE	22526	46241
	352-0203-00			1	. HLDR,TERM CONN:7 WIRE BLACK	80009	352-0203-00
	352-0198-00			1	. HLDR,TERM CONN:2 WIRE BLACK	80009	352-0198-00

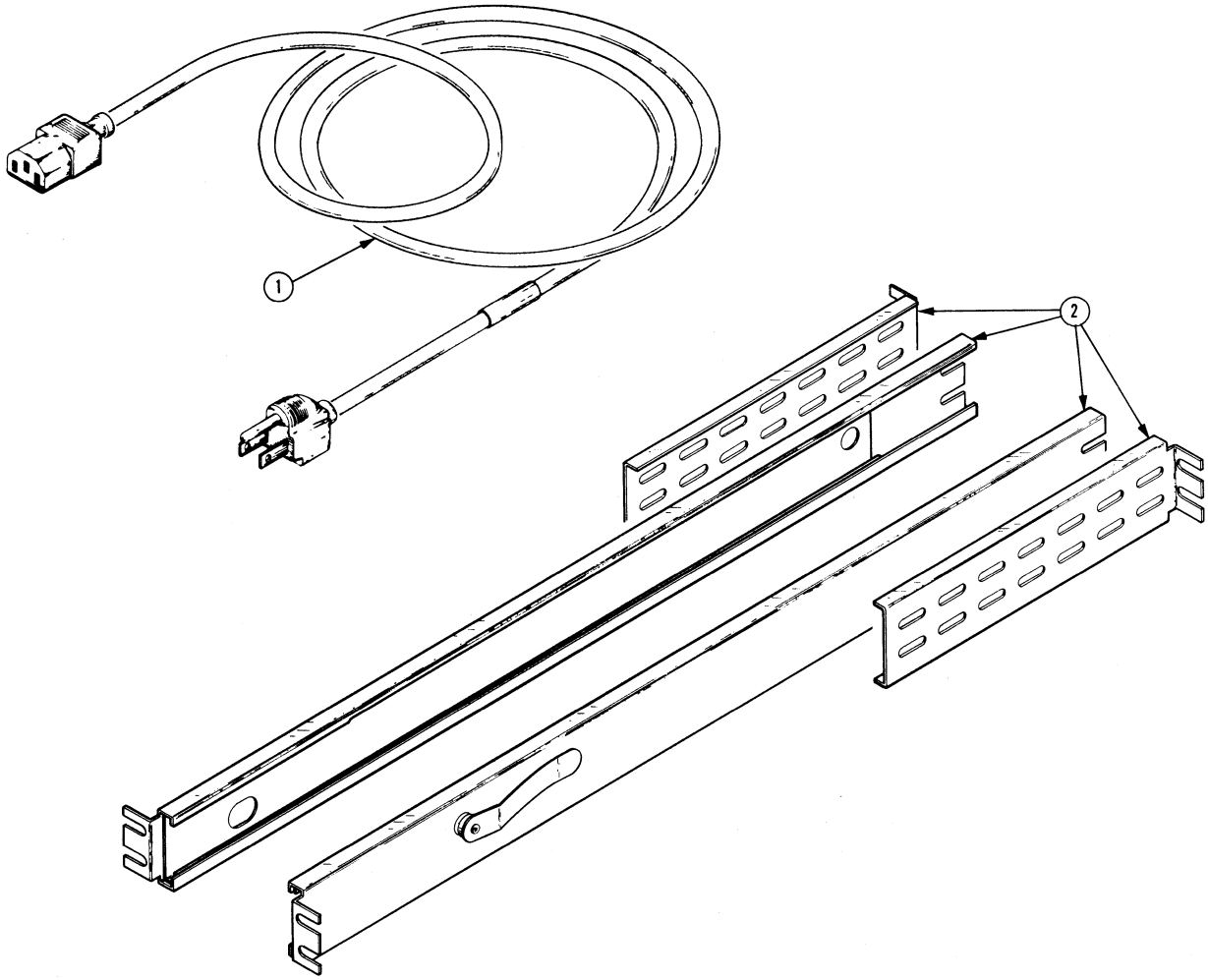

Fig. & Index No.	Tektronix Part No.	Serial/Model No. Eff	Dscont	Qty 1 2 3 4 5	Name & Description	Mfr Code	Mfr Part Number
-1	161-0066-00			1	CABLE ASSY,PWR:8 FOOT LONG	80009	161-0066-00
-2	351-0394-00			1	SLIDE,GUIDE:(PAIR)	80009	351-0394-00
	070-1498-02			1	MANUAL,TECH:INSTRUCTION	80009	070-1498-02

MANUAL CHANGE INFORMATION

At Tektronix, we continually strive to keep up with latest electronic developments by adding circuit and component improvements to our instruments as soon as they are developed and tested.

Sometimes, due to printing and shipping requirements, we can't get these changes immediately into printed manuals. Hence, your manual may contain new change information on following pages.

A single change may affect several sections. Since the change information sheets are carried in the manual until all changes are permanently entered, some duplication may occur. If no such change pages appear following this page, your manual is correct as printed.

SERVICE NOTE

Because of the universal parts procurement problem, some electrical parts in your instrument may be different from those described in the Replaceable Electrical Parts List. The parts used will in no way alter or compromise the performance or reliability of this instrument. They are installed when necessary to ensure prompt delivery to the customer. Order replacement parts from the Replaceable Electrical Parts List.

CALIBRATION TEST EQUIPMENT REPLACEMENT

Calibration Test Equipment Chart

This chart compares TM 500 product performance to that of older Tektronix equipment. Only those characteristics where significant specification differences occur, are listed. In some cases the new instrument may not be a total functional replacement. Additional support instrumentation may be needed or a change in calibration procedure may be necessary.

Comparison of Main Characteristics

DM 501 replaces 7D13		
PG 501 replaces 107	PG 501 - Risetime less than 3.5 ns into 50 Ω.	107 - Risetime less than 3.0 ns into 50 Ω.
108	PG 501 - 5 V output pulse; 3.5 ns Risetime	108 - 10 V output pulse 1 ns Risetime
PG 502 replaces 107		
108	PG 502 - 5 V output	108 - 10 V output
111	PG 502 - Risetime less than 1 ns; 10 ns Pretrigger pulse delay	111 - Risetime 0.5 ns; 30 to 250 ns Pretrigger pulse delay
PG 508 replaces 114	Performance of replacement equipment is the same or better than equipment being replaced.	
115		
2101		
PG 506 replaces 106	PG 506 - Positive-going trigger output signal at least 1 V; High Amplitude output, 60 V.	106 - Positive and Negative-going trigger output signal, 50 ns and 1 V; High Amplitude output, 100 V.
067-0502-01	PG 506 - Does not have chopped feature.	0502-01 - Comparator output can be alternately chopped to a reference voltage.
SG 503 replaces 190, 190A, 190B	SG 503 - Amplitude range 5 mV to 5.5 V p-p.	190B - Amplitude range 40 mV to 10 V p-p.
191		
067-0532-01	SG 503 - Frequency range 250 kHz to 250 MHz.	0532-01 - Frequency range 65 MHz to 500 MHz.
SG 504 replaces 067-0532-01	SG 504 - Frequency range 245 MHz to 1050 MHz.	0532-01 - Frequency range 65 MHz to 500 MHz.
067-0650-00		
TG 501 replaces 180, 180A	TG 501 - Trigger output-slaved to marker output from 5 sec through 100 ns. One time-mark can be generated at a time.	180A - Trigger pulses 1, 10, 100 Hz; 1, 10, and 100 kHz. Multiple time-marks can be generated simultaneously.
181		181 - Multiple time-marks
184	TG 501 - Trigger output-slaved to market output from 5 sec through 100 ns. One time-mark can be generated at a time.	184 - Separate trigger pulses of 1 and 0.1 sec; 10, 1, and 0.1 ms; 10 and 1 μs.
2901	TG 501 - Trigger output-slaved to marker output from 5 sec through 100 ns. One time-mark can be generated at a time.	2901 - Separate trigger pulses, from 5 sec to 0.1 μs. Multiple time-marks can be generated simultaneously.

NOTE: All TM 500 generator outputs are short-proof. All TM 500 plug-in instruments require TM 500-Series Power Module.

Tektronix®
COMMITTED TO EXCELLENCE

MANUAL CHANGE INFORMATION

Date: 6-11-80 Change Reference: M31985

Product: 1440 EFF SN B061239 Manual Part No.: 070-1498-02

DESCRIPTION

REPLACEABLE ELECTRICAL PARTS LIST CHANGES

CHANGE TO:

Q1340	151-0325-01	TRANSISTOR:SILICON,PNP,SEL FROM 2N4258
Q1582	151-0367-01	TRANSISTOR:SILICON,NPN,SEL FROM 3571TP
Q1702	151-0325-01	TRANSISTOR:SILICON,PNP,SEL FROM 2N4258
Q2194	151-0367-01	TRANSISTOR:SILICON,NPN,SEL FROM 3571TP
Q2492	151-0367-01	TRANSISTOR:SILICON,NPN,SEL FROM 3571TP
Q2562	151-0367-01	TRANSISTOR:SILICON,NPN,SEL FROM 3571TP
Q4192	151-0367-01	TRANSISTOR:SILICON,NPN,SEL FROM 3571TP
Q4200A,B	151-1049-01	TRANSISTOR:SILICON,JFE,N-CHANNEL,DUAL
Q4244	151-0325-01	TRANSISTOR:SILICON,PNP,SEL FROM 2N4258
Q4300A,B	151-1049-01	TRANSISTOR:SILICON,JFE,N-CHANNEL,DUAL
Q4400A,B	151-1049-01	TRANSISTOR:SILICON,JFE,N-CHANNEL,DUAL
Q4416	151-0325-01	TRANSISTOR:SILICON,PNP,SEL FROM 2N4258
Q4420	151-0325-01	TRANSISTOR:SILICON,PNP,SEL FROM 2N4258
Q4424	151-1005-01	TRANSISTOR:SILICON,JFE,N-CHANNEL
Q4500A,B	151-1049-01	TRANSISTOR:SILICON,JFE,N-CHANNEL,DUAL
Q4510	151-1005-01	TRANSISTOR:SILICON,JFE,N-CHANNEL
Q4512A,B	151-1049-01	TRANSISTOR:SILICON,JFE,N-CHANNEL,DUAL
Q4604A,B	151-1049-01	TRANSISTOR:SILICON,JFE,N-CHANNEL,DUAL
Q4612	151-1005-01	TRANSISTOR:SILICON,JFE,N-CHANNEL
Q4714	151-0325-01	TRANSISTOR:SILICON,PNP,SEL FROM 2N4258
Q4732	151-1005-01	TRANSISTOR:SILICON,JFE,N-CHANNEL
Q4734	151-1005-01	TRANSISTOR:SILICON,JFE,N-CHANNEL
Q4832	151-1005-01	TRANSISTOR:SILICON,JFE,N-CHANNEL
Q5116	151-1005-01	TRANSISTOR:SILICON,JFE,N-CHANNEL
Q5216	151-1005-01	TRANSISTOR:SILICON,JFE,N-CHANNEL
Q5316	151-1005-01	TRANSISTOR:SILICON,JFE,N-CHANNEL
Q5618	151-1005-01	TRANSISTOR:SILICON,JFE,N-CHANNEL
Q5722	151-1005-01	TRANSISTOR:SILICON,JFE,N-CHANNEL
Q5836	151-1005-01	TRANSISTOR:SILICON,JFE,N-CHANNEL

Product: 1440 Date: 6-11-80 Change Reference: M31985

DESCRIPTION

CHANGE TO:

U3180	156-0032-02	MICROCIRCUIT,DI:4-BIT BINARY COUNTER
U3190	156-0042-02	MICROCIRCUIT,DI:J-K M/S FLIP-FLOP
U4212	156-0644-01	MICROCIRCUIT,DI:QUAD BILATERAL SWITCH,CAK,CD4066AE
U5122	156-0200-02	MICROCIRCUIT,LI:LOW INPUT/OFFSET CURRENT
U5222	156-0200-02	MICROCIRCUIT,LI:LOW INPUT/OFFSET CURRENT
U5322	156-0200-02	MICROCIRCUIT,LI:LOW INPUT/OFFSET CURRENT
U5626	156-0200-02	MICROCIRCUIT,LI:LOW INPUT/OFFSET CURRENT
U5730	156-0200-02	MICROCIRCUIT,LI:LOW INPUT/OFFSET CURRENT
U5844	156-0200-02	MICROCIRCUIT,LI:LOW INPUT/OFFSET CURRENT