TEKTRONIX

OSCILLOSCOPE

TYPE 547

MANUAL

TELEQUIPMENT

OSCILLOSCOPE
TYPE D67

Illustrated above is the registered trade mark
of the TELEQUIPMENT division of TEKTRONIX U.K. LIMITED.

TEKTRONIX, U.K. Ltd
313, Chase Road,
Southgate,
London,
N14 6JJ,
England.

Telephone: 01-882 1166

Telex: 262004

Cables: TELEQUIPT LONDON N.14

TEKTRONIX, INC.,
P.O. Box 500,
Beaverton,
Oregon (97005).

Telephone: (503) 644-0161

Telex: 36-0485

Cables: TEKTRONIX.

070-1076-00

Issue 7 (942)
April 1973

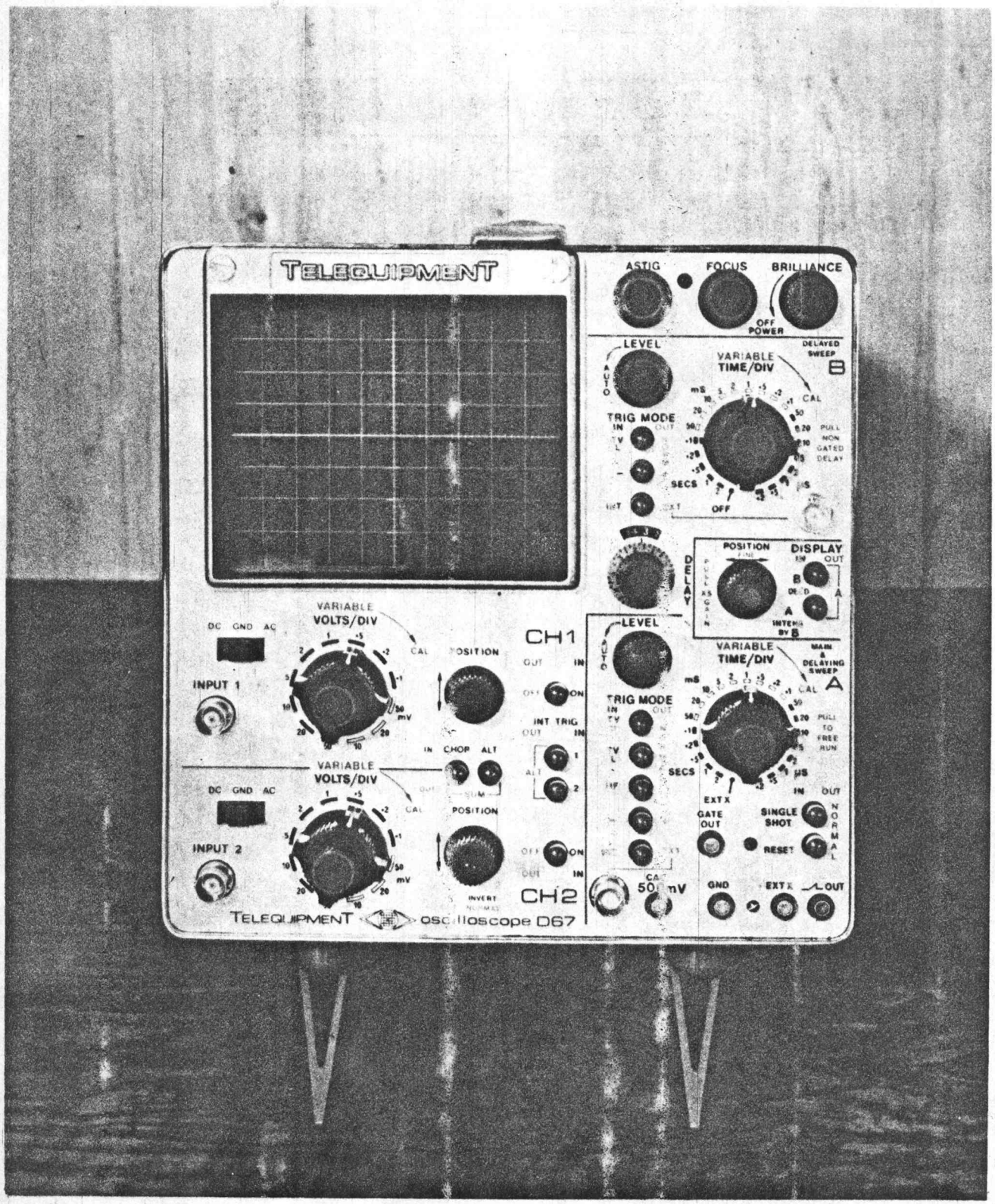
TELEQUIPMENT
ASTIG
FOCUS
BRILLIANCE
OFF POWER
LEVEL
VARIABLE TIME/DIV
DELAYED SWEEP
B
TRIG MODE
SECS
OFF
POSITION
DISPLAY
DELAY
VARIABLE VOLTS/DIV
DC GND AC
INPUT 1
INPUT 2
POSITION
CH1
CH2
CHOP
ALT
INT TRIG
MAIN & DELAYING SWEEP
A
EXT X
GATE OUT
SINGLE SHOT
RESET
NORMAL
GND
EXT X
OUT
TELEQUIPMENT oscilloscope D67

INTRODUCTION

The D67 is a 25 MHz, all solid state dual-trace oscilloscope. An 8 x 10 cm mesh CRT provides a bright and clear display. The dual-trace vertical system displays either channel separately, adds channels algebraically, alternates between channels or chops between channels at 80 kHz rate. The delayed sweep feature permits close examination of any part of a complex waveform and allows for an accurate time measurement of the input waveform. The solid state design, using FET input circuitry, provides minimum drift and fast stabilization time.

The design of this instrument is subject to continuous development and improvement, consequently this instrument may incorporate minor changes in detail from the information contained herein, which would, in the main, affect chapters 5 and 6 and the reader should pay particular attention to the notes at the beginning of chapter 5.

NOTICE TO OWNER

To obviate the risk of damage during transit and facilitate packaging, the owner is requested to remove the power supply plug and **NOT** send the following items unless they are suspect, should this Instrument be returned to TELEQUIPMENT for servicing.

Manual
Probes
Power Supply Lead
Plug Assemblies

CONTENTS

CHAPTER 1

SPECIFICATION

VERTICAL SYSTEM	
Operating modes	Channel 1 Channel 2 (normal or inverted) Channels 1 & 2 Alternate Chopped (at 80 kHz approx.) Summed
3 dB bandwidth – D.C. coupled	D.C. – 25 MHz
A.C. coupled	2 Hz – 25 MHz
Risetime	14 ns nominal
Deflection factors	
Calibrated – accuracy ± 3%	10 mV – 50 V/div (12 1-2-5 steps)
Uncalibrated – with variable	Complete cover between steps and to 125 V/div or greater
Signal delay	200 ns
Input impedance	1 M Ω and 39 pF approx.
Maximum input – D.C., A.C. & Sum of	400 V peak
HORIZONTAL SYSTEM	
Sweep generator	
Sweep display modes	A A intensified by B B delayed by A Single-shot
Sweep rates – A and B sweeps	
Calibrated (22 1-2-5 steps)	2 s – 200 ns/div ± 3% (without expansion) 400 ms – 40 ns/div ± 5% (with x 5 expansion)
Uncalibrated (with variable)	Complete cover between steps and to 5 s/div or greater
External horizontal amplifier	A sweep only
3 dB bandwidth	D.C. – 1 MHz
Risetime	350 ns nominal
Deflection factors	3 V/div approx. 600 mV/div approx. (with x 5 expansion)
Input impedance	1 M Ω and 30 pF approx
Maximum input peak	400 V
TRIGGER	
Internal	
Source	CH1, CH2 or alternate
Amplitude – Automatic	0.2 div at 50 Hz – 5 MHz approx.
Trigger level	0.2 div at 10 Hz – 5 MHz approx.
HF	1 div at 1 – 25 MHz approx.

TRIGGER cont'd	
External	
Coupling	A.C.
Amplitude	250 mV to ± 15 V at above frequencies
External impedance	100 kΩ and 30 pF
CATHODE RAY TUBE	
Type	Single-gun with mesh PDA
Display area	8 x 10 div
Phosphor	P31 (standard), P7 or P11
Overall accelerating potential	10 kV approx.
External intensity modulation	
Coupling	A.C. to cathode
Amplitude, peak to peak	25 V maximum 5 V for perceptible modulation at average brilliance
Time constant	20 μs
FRONT PANEL OUTPUTS	
Calibrator, peak to peak	500 mV squarewave at supply frequency
A sweep sawtooth	
Coupling	D.C.
Amplitude, peak	36 V approx.
Minimum load	30 kΩ
Gate out	
Duration of A or B sweep	depending on Horizontal mode selected
Coupling	D.C.
Amplitude, peak	5 V approx.
POWER REQUIREMENTS	
Voltage	100 – 125 V in 5 V steps 200 – 250 V in 10 V steps
Frequency	48 – 400 Hz
Consumption	50 VA approx.
SIZE	
Height	24 cm
Width	21 cm
Depth	44 cm
WEIGHT	11.5 kg
COOLING	Convection
TEMPERATURE LIMITS, ambient	
Operating	−15 to +40°C approx.
Non-operating	−25 to +70°C approx.

CHAPTER 2

OPERATING INSTRUCTIONS

FUNCTION OF CONTROLS AND CONNECTORS

CRT CONTROLS

BRILLIANCE varies the intensity of the display as well as serving as the on-off switch. In the A INTENS BY B display mode, the portion of the display swept by the B Sweep is at the same intensity as in the A only condition, the remainder is slightly dimmed, reference Fig. 7.

FOCUS controls the definition of the display.

ASTIG is used in conjunction with FOCUS for best overall definition.

TRACE ROT'N rotates the traces about the horizontal axis of the CRT and is used to align the traces with the horizontal graticule divisions.

SCALE ILLUM varies the intensity of the graticule illumination.

DELAYED SWEEP B CONTROLS

TIME/DIV controls the speed of the delayed sweep. The sweep speeds indicated are only valid if VARIABLE B is fully clockwise and FINE position is pushed in for x1 horizontal gain. If FINE position is pulled out and VARIABLE is at CAL, the calibration should be divided by 5 to give the effective sweep speed. In the A INTENS by B and B DEL'D display modes the delayed sweep should always be set faster than the main sweep.

VARIABLE enables speeds between that indicated by the TIME/DIV switch and the next lower speed to be selected. The control also selects gated or ungated operation of the delayed sweep. In gated operation, the B sweep will start only after receipt of a suitable triggering signal, whereas in the ungated mode, the B sweep will start at any point on the A sweep as selected by the DELAY control. For minimum delay jitter, the gated mode should be used in preference to the ungated. When ungated, the INT/EXT B trigger selector should be set to EXT to reduce any possibility of fast trigger pulses trying to gate the sweep.

LEVEL is only operative in the gated condition of the delayed sweep; the control selects the point on the triggering signal at which the sweep will start. In the AUTO position, the sweep will start at the mean level of the triggering waveform.

TRIG MODE buttons are only operative in the gated condition of the B sweep. The TV L button should be depressed for triggering from TV line signals. The polarity button is used in conjunction with LEVEL to determine the starting point of the B sweep. The INT-EXT button enables internal, from the vertical amplifier, or external triggering. Unless a suitable external signal is applied when the button is at EXT, no B sweep will occur in the B DEL'D or A INTENS BY B display modes.

DELAY varies the point on the A sweep at which the B sweep starts. The dial markings serve as a reference for the control setting but do not indicate any particular value of delay time. With ungated operation of the B sweep, DELAY continuously varies the start of the delayed sweep with reference to the main sweep, while with gated operation the start of the delayed sweep moves in a succession of jumps to the same point on the adjacent cycle of a repetitive waveform.

HORIZONTAL DISPLAY CONTROLS

POSITION varies the location of the trace(s) in the horizontal axis.

FINE acts as a more sensitive position control as well as the x5 horizontal gain switch. When pulled out in the x5 position, all sweep speed calibrations must be divided by 5.

DISPLAY selects the three alternative horizontal display modes. With both buttons out, only the A sweep is operative; the B sweep is disabled. With the lower button in, that part of the A sweep covered by the B sweep is further intensified. The intensified portion may be adjusted with the B TIME/DIV, VARIABLE and DELAY controls to show the portion of the display that will be expanded when the upper B DEL'D button is depressed. With the upper button in, the B sweep is displayed and should always be faster than the A sweep.

MAIN SWEEP A CONTROLS

TIME/DIV controls the speed of the main sweep. The sweep rates indicated are only valid if VARIABLE is fully clockwise and FINE position is pushed in for x1 gain. If FINE position is pulled out and VARIABLE is at CAL, the calibrations should be divided by a factor of 5 to ascertain the sweep speed. In both the intensified and delayed settings of the DISPLAY buttons, the TIME/DIV A control should be set to a slower speed than TIME/DIV B.

VARIABLE enables speeds between that indicated by TIME/DIV and the next lower speed to be selected. The control also selects free-running or triggered operation of the main sweep. The free-running position is useful for trace location, irrespective of trigger control settings, and for providing a repetitive sawtooth from the SAWTOOTH OUT socket to drive other equipment.

LEVEL selects the point on the signal waveform at which the A sweep starts. In the AUTO position, the sweep runs recurrently at a low repetition rate in the absence of a triggering signal; when a suitable signal is applied, the sweep is automatically triggered at the mean level of the input waveform.

TRIG MODE

TV F and TV L facilitate triggering from TV field (frame) or line pulses; the LEVEL control may require adjustment for best results. Polarity relates to the sense of video modulation.

HF should be depressed for triggering from high-frequency signals. LEVEL should be adjusted for a locked sweep.

+ and – provide triggering from the positive-going or negative-going slopes of a waveform.

INT and EXT enable the A sweep to be triggered either internally, from the vertical amplifier, or externally.

SINGLE SHOT assists in viewing or photographing a non-recurrent signal. An illustration of the facility is given in Ops. 11 – 13 below. If a recurrent signal is applied to the oscilloscope, in the single-shot condition, the sweep will run once each time RESET is pressed.

VERTICAL DISPLAY CH1 & CH2 CONTROLS

OFF-ON The release of these buttons switches off the channel concerned. If both channels are switched off, a straight-line trace results which cannot be shifted by either POSITION control.

INT TRIG buttons select triggering from either or both channels. When alternately triggering from both channels the ALT button requires to be depressed and both INT TRIG buttons released; the displays should be partially superimposed.

CHOP-ALT-SUM provides three display modes for the vertical channels. In the chopped mode, the channels are alternately switched on and off at a frequency of about 80 kHz; this mode is suitable at the lower sweep speeds. With alternate trace display, each channel is on for the duration of a sweep; the alternate mode is preferable at higher sweep speeds. In the SUM mode, both channels are always on and the display is the resultant of the individual signals; CH1 POSITION is used to shift the trace. CH2 POSITION is disabled in the SUM mode. If INVERT is depressed, the resultant display is the difference between the two input signals.

POSITION displaces each trace in the vertical direction except when both channels are off. In the SUM mode, only the CH1 POSITION control is operative.

INVERT-NORMAL The setting of this button determines whether the CH2 signal is displayed in the same polarity as the input signal or inverted. The inverted setting is used to display the difference between two signals in the SUM mode.

VOLTS/DIV provides twelve steps of attenuation of each channel's input signal. Calibrated sensitivities are only valid when VARIABLE is fully clockwise.

VARIABLE enables all deflection sensitivities between that selected by the VOLTS/DIV switch and the next below to be covered. The control must be fully clockwise for a calibrated display.

DC-GND-AC selects the input signal coupling. In the DC position the signal from the INPUT

connector is coupled directly to the attenuator; a capacitor is inserted in series in the AC position. In the GND setting, the input signal is disconnected and the input to the attenuator is grounded; this enables the 0 V d.c. level of a trace to be ascertained.

INPUT AND OUTPUT CONNECTORS

Z MOD, at the rear of the instrument, is connected via an isolating capacitor to the CRT cathode. A negative-going signal is thus necessary to intensify the trace while a positive-going signal will blank it.

EXT. The BNC connectors in the sweep section of the front-panel enable external triggering signals to be applied to the timebases when the lowest TRIG MODE buttons are out.

GATE OUT provides fast-edged negative-going rectangular pulses lasting for the duration of the A or B sweeps. In the A mode, the pulse duration is that of the A sweep. In the A INTENS BY B and B DEL'D mode, the duration is that of the B sweep.

The A sweep gate signal may be used as an alternative to a 1 kHz squarewave for compensating x10 probes. Connect the probe to the required channel INPUT socket, set VOLTS/DIV to 100 mV, VARIABLE fully clockwise INPUT to AC, TIME/DIV A to 1 ms, VARIABLE A pulled out and DISPLAY to A. Apply the probe tip to the GATE OUT socket. Adjust the probe trimmer for a square corner on the leading negative edge of the display.

The HZ1B trimmer has a screwdriver adjustment through a hole in the probe body.

The GE81000 probe is compensated as follows: slacken the narrower of the two knurled rings at the BNC connector end of the probe cable. Rotate the adjacent broader ring until a square corner is obtained. Tighten the narrow ring without disturbing the setting of the broad ring.

If a 1 kHz squarewave is used, the amplitude should be about 500 mV and a few cycles of the waveform should be displayed. The above compensating procedures should be followed with the x10 probe tip applied to the squarewave generator output.

CAL socket provides a waveform for checking the calibration of the vertical channels. The repetition rate is at supply frequency.

GND is connected to the chassis of the instrument.

EXT X is d.c.-coupled to the horizontal amplifier in the EXT X position of the TIME/DIV A switch. A x5 amplification of the horizontal display is obtained by pulling out FINE position. If a dual-trace display is required on EXT X, the vertical display mode must be set to CHOP, the ALT and SUM modes will provide only one trace.

SAWTOOTH OUT provides a positive-going ramp waveform when the A sweep is running. A recurrent sawtooth is produced when VARIABLE A is pulled out for the sweep generator to free-run. The resistance of an applied load should exceed 30 kΩ to avoid over-loading the sweep generator.

INPUT BNC connectors are linked to the vertical channel attenuators via the DC-GND-AC switches; a capacitor is inserted in series in the AC position. When the switch is set to GND, the inner of the connector is open-circuited and the attenuator shorted to chassis.

PRE-OPERATING CHECK

Before connecting the instrument to the supply, check that the rear voltage-selector plug is indicating the local supply voltage or the nearest value to it. Check also that the fuse fitted is 500 mA for 100-125 V operation or 250 mA for 200 - 250V.

The 3-core supply lead is alternatively colour coded as follows:

Line	Neutral	Earth (Ground)
Brown Black	Blue White	Green/Yellow Green

Set the controls as follows:

CRT CONTROLS

BRILLIANCE	Fully anti-clockwise – POWER OFF
FOCUS	Central
ASTIG	Central
TRACE ROT'N – at rear	As set

SCALE ILLUM – at rear	Any position

DELAYED SWEEP B CONTROLS

TIME/DIV	0.5 ms
VARIABLE	Fully clockwise and pulled out
LEVEL	Fully anti-clockwise – Auto
TRIG MODE	NORM, +, INT
DELAY	5 – outer dial (in window) 0 – inner dial

HORIZONTAL DISPLAY CONTROLS

POSITION	Central
FINE	Central and pushed in
DISPLAY	A – both buttons out

MAIN SWEEP A CONTROLS

TIME/DIV	5 ms
VARIABLE	Fully clockwise and pulled out
LEVEL	Fully anti-clockwise – AUTO
TRIG MODE	NORMAL, +, INT
SINGLE SHOT	NORMAL

VERTICAL DISPLAY CH1 & CH2 CONTROLS

OFF-ON	ON
INT TRIG	1
CHOP-ALT-SUM	CHOP
POSITION	Central
INVERT-NORMAL	NORMAL
VOLTS/DIV	200 mV
VARIABLE	Fully clockwise
DC-GND-AC	GND

OPERATION

Plug into the supply and switch on with the BRILLIANCE control.

Allow about ten minutes for warm up then adjust CRT and POSITION controls for a two-trace display. Adjust TRACE ROT'N if necessary to make the traces horizontal.

Apply the supply frequency squarewave from the CAL 500 mV peak to peak socket to both INPUT connectors via co-axial leads and switch DC-GND-AC switches to DC. Push in sweep A VARIABLE to lock the display.

If the supply frequency is 50 Hz, 2½ cycles of the calibrator waveform will be displayed, each display being 2.5 div in amplitude.

To illustrate the operation of the alternative horizontal display modes, continue as follows:

1. Push in A INTENS BY B.
2. Adjust BRILLIANCE to intensify 1 division of the trace(s) in relation to remainder.
3. Rotate DELAY for continuous movement of the intensified portion.
4. Push in B DEL'D, observe that display consists of the portion of the intensified sweep.
5. Push in A INTENS BY B.
6. Push in B VARIABLE.
7. Rotate DELAY, observe that the intensified portion jumps to the same point on the adjacent half-cycle.
8. Depress B DEL'D to release both DISPLAYs.
9. Rotate LEVEL A for a stable trace.
10. Disconnect CAL from INPUTs 1 & 2.
11. Push in SINGLE SHOT.
12. Press RESET, observe adjacent neon light strikes.
13. Connect CAL to INPUT 1, observe timebase runs once and neon extinguishes. This simulates a random phenomenon of a single-shot display.

CHAPTER 3

CIRCUIT DESCRIPTION

This chapter will assist the reader to comprehend the circuitry of the D67. By referring to the Block diagram, Figure 1, the reader will see the interfaces of the various networks and signal paths, which will be dealt with in detail later.

The signal is fed, via the Attenuator, to the Vertical Amplifier, its description covers the function of the 'Y' input, Channel Nos 1 and 2, Delay line driver and Output amplifiers, Channel switching multivibrator and Trigger pre-amplifier. The output is fed to the 'Y' plates of the CRT with a portion of it being fed to the trigger network.

The description of the Trigger network covers both trigger 'A' and 'B', which provides pulses of suitable amplitude and polarity to trigger the timebase from internally or externally derived waveforms.

The Timebase description deals with the ALT pulse and Sweep generators, Single shot and Hold-off, Sweep Gating and Delay bistables. This stage determines the start and finish of each sweep and generates a sawtooth waveform for the horizontal amplifier.

The Horizontal amplifier covers the 'X' output, which amplifies the sawtooth waveform or an external 'X' signal and applies it in push-pull to the 'X' plates of the CRT.

The Unblanking amplifier covers the Chop blanking amplifier, Unblanking bistables and Unblanking amplifier, the output being fed to the grid of the CRT.

The Calibrator is included with the description of the Power supplies, its function is to provide a calibrated peak to peak squarewave at power-line frequency for the purposes of checking the vertical amplifier and timebase calibration.

ATTENUATORS

The signals to be observed are fed to the instrument via BNC sockets and switch S901, reference Figure 2, to two identical attenuators each comprising five frequency-compensated resistive dividers with ratios of 1000:1, 100:1, 10:1, 5:1, 2:1. These are switched, singly or in tandem, C902, C903, C904, C912 and C913 serve to standardize the input time constants. C905, C906, C907, C914 and C916 compensate the respective dividers.

VERTICAL AMPLIFIER

The circuits of channel 1 and channel 2 are identical; channel 1 is described, below with reference to Figure 3.

The output from the attenuator is fed, via a protection circuit C621, C622, R623a, R623b, R622 and R633, to the gate of TR623. The protection circuit prevents excessive voltage damaging the input FET.

TR623 and TR624 form a paraphase amplifier with their sources long-tailed through TR621. R651 provides variable gain control, R644 compensates for the trace movement caused by varying R651, Thermistor TH621 and R683 compensate for gain variation with temperature. Neutralization is effected by C630.

The output from the FET input stage is taken to a transistor gain stage, TR628 and TR629. The channel gain is set by R671 in the emitter circuit and the collector outputs are connected to the switching stage, TR639 and TR641, via emitter followers, TR633 and TR634. These provide, in push-pull, the channel trigger signal, The Miller capacities, of the above gain stage, are neutralized by C632 and C636.

TR639 and TR641 form a long-tailed pair, with C646 and R699 providing H.F. compensation, their output feeds a shunt feedback amplifier, TR644 and TR645. The feedback resistors are split into pairs, R704, R707 and R705, R708, with the signal delay line compensation, which is provided by C649, R706; C651, R709; C652, R713 and C653, R714 at one end, connected between the junction of the above pairs and compensation at the other end, reference Figure 4, is provided by C654 and R715. The delay line is terminated at each end by R711, R712 and R715, R717.

The output from the delay line is fed to the emitter input of the output stage, TR647 and TR648, and drives the 'Y' plates of the CRT, Figure 13.

A portion of the output is taken via a balanced divider, R735 and R736, to switch, S624, which switches either the above portion of the signal or the channel signal from the emitter followers, TR633 and TR634, to two long-tailed pairs, TR649, TR650 and TR651, TR652, which drive the two trigger circuits 'A' and 'B'.

Channel switching is carried out by TR637 and TR638, which acts as a bistable in the ALT mode and a free-running multivibrator in the CHOP mode. The current is provided via a long-tail TR627.

In the ALT mode a negative going pulse, coinciding with the start of the sweep flyback, is coupled via diodes D627 and D628 to the bases of the above bistable and causes it to switch. When TR637 is conducting, it passes current from the switching stage, TR639 and TR641, and allows channel '1' signal to pass to the shunt feedback amplifier, TR644 and TR645. At the same time TR638 is off, its collector rises to 16 V taking the emitters of channel '2' switching stage, TR642 and TR643, with it and so cutting off the current. Diodes, D623, D624, D625 and D626, prevent the base-emitter junction from breaking down in the reverse condition.

In the CHOP mode, the short between TR637 and TR638 emitters is removed by switch S623 and replaced with a capacitor, C638, hence the bistable free-runs at a frequency of approximately 80 kHz.

In the SUM mode, the TR627 current is switched off by S623 and prevents TR639 and TR641 from conducting. To meet the requirement of both switching stages, TR639, TR641 and TR642, TR643, to be on, extra current is bled from the 115 V line via R659 and R642, which flows through the switching stages, via D629, D627, D628, R701, R702 and R732, to earth. Hence the signals are added at the bases of TR644 and TR645.

Channel '2' signal can be inverted by switch, S625, to provide addition or subtraction of the two signals. Also in the SUM mode, channel '2' POSITION control is disconnected and channel '1' provides the necessary vertical shift.

The following table shows the state of the switched components for all switch combinations:

Condition A denotes: R642, R659 and R682 connected to + 115v
Condition B denotes: R652 connected to −12v
Condition C denotes: grounded via R732

		ALTernate			CHOP			SUM		
CH1	CH2	A	B	C	A	B	C	A	B	C
ON	OFF	NO	YES	NO	NO	YES	NO	NO	YES	NO
OFF	ON	NO	YES	NO	NO	YES	NO	NO	YES	NO
ON	ON	NO	YES	NO	NO	YES	NO	YES	NO	YES
OFF	OFF	NO	YES	NO	NO	YES	NO	NO	YES	NO

CH1 ON, CH2 OFF

TR637, TR639 and TR641 are conducting, permitting the output of TR639 and TR641 to pass to the bases of TR644 and TR645; TR642 and TR643 being reverse biased by the potential at TR638 collector.

CH1 OFF, CH2 ON

TR638, TR642 and TR643 are conducting, so only the output of TR642 and TR643 may pass to the bases of TR644 and TR645; TR639 and TR641 being reverse biased by the potential at TR637 collector.

CH1, CH2 ALTERNATE

The emitters of TR637 and TR638 are connected together to form a bistable circuit. After the end of each sweep of timebase 'A', a negative going pulse appears at the junction of D627 and D628 which reverses the state of the bistable. Hence TR637 and TR638 conducting during alternate sweeps allow the outputs of CH1 and CH2 alternately to reach the bases of TR644 and TR645.

CH1, CH2 CHOPPED

The emitters of TR637 and TR638 are coupled by a capacitor, C638, forming an astable multivibrator, which free runs at about 80 kHz. Thus the outputs of CH1 and CH2 are successively switched into TR644 and TR645 at an 80 kHz rate.

At each transition of TR637 and TR638, a pulse is fed from the emitter, via C636 and C637 respectively, to the Unblanking amplifier (Figure 12) which blanks the CRT beam and thus provides automatic transient blanking in the chopped mode.

CH1, CH2 SUM

The tail of the multivibrator R652 is disconnected so that both TR637 and TR638 are nonconducting.

A resistor R 732 is connected to ground providing a current path for both channels simultaneously via D627, D628, and D629. Hence TR639, TR641, TR642 and TR643 are all conducting. Extra current is fed to their collectors and the + 18 V line, via R642, R659 and R682 from the + 115 V line to maintain correct conditions.

CH1 and CH2 may be used as a summing or differential (with CH2 INVERT button depressed) amplifier. In this mode, the CH2 POSITION control is disconnected and only CH1 POSITION control may be used to move the resultant display.

CH1 OFF, CH2 OFF

TR637 and TR638 are nonconducting preventing outputs from either CH1 or CH2 from reaching TR644 and TR645.

SWEEP TRIGGERS

It will be seen by referring to Figures 5 and 6, that the circuitry of the main Sweep Trigger 'A' and the delayed Sweep Trigger 'B' are substantially the same. The difference being the TV field and HF modes are omitted in the latter and the trigger will not free-run in the absence of a trigger input.

The bases of Trigger 'A' input amplifiers, TR2 and TR3, are fed with internal or external trigger signals via switches, S1a and S1b. S1a selects the source: the collectors of TR651 and TR652 in the vertical amplifier or TR1 the external trigger amplifier. S1b selects the polarity of the trigger signal on which the triggering occurs.

When switched in by S2, R16, the LEVEL control, varies the base potentials of TR2 and 3 in antiphase. This alters the quiescent voltage on the base of TR4 and so the d.c. level of signal required to trip TR4 and 5; these form a Schmitt trigger in the NORMAL positions of S1c, d and e.

When S2 is open in the AUTO position, feedback is applied from TR5 collector via R24 and 22 to TR3 base and from TR4 collector via R25 and 8 to TR2 base. This feedback causes TR2 and 3 and 4 and 5 to oscillate in the absence of a trigger input at a low frequency, primarily determined by C7, R24 & 25. When signals are applied, TR2 & 3 lock to their frequency. In the free-running condition, the amplitude of the output at the collector of TR3 is controlled by the trigger sensitivity preset R33; this adjusts the hysteresis of TR4 & 5. R12 is set to provide symmetric operation of TR2 & 3.

When S1c, d,& e are in the NORMAL position, TR4 & 5 form a Schmitt trigger with coupling resistor R32 and speed-up capacitor C10. The constant amplitude rectangular-wave output at the collector of TR5 is differentiated by C13 and R36; the resulting bidirectional pulses are applied to the series clipper D1 which provides the collector of TR104 in the sweep circuit with positive-going trigger pulses.

In the TV positions of S1, R27 is disconnected from the emitter of TR4; TR4 converts into a sync separator with C8 being switched across R29. TR5 changes into an inverter with decoupling capacitor C12 being switched across the emitter resistors R27, 33 & 34. In the TV F position of S1e the differentiating time-constant of C13 and R36 is increased by the addition of R37.

With S1c set to HF, R28 is added in series with R33 across C9; this converts TR4 & 5 into a free-running oscillator whose frequency is adjusted by R16, the LEVEL control, to synchronise with the HF trigger input.

When VARIABLE 'A' is pulled out for the sweep to free-run, the sweep is no longer triggered.

Trigger 'B', internally or externally, derived signals are applied to the bases of TR52 and 53 via S51a & b. The setting of S51a determines whether the input is derived from TR649 & 650 in the vertical amplifier or from an external input via TR51. S51b selects the polarity on which triggering occurs.

The output from the collector of TR53 is applied to the base of TR54; this with TR55 form a Schmitt circuit in the NORM position of S51c. The potential on the base of TR54 is either preset when S52 is open or adjustable by R66 when S52 is closed. R62 balances TR52 & 53; R82 controls the hysteresis of TR54 & 55.

The constant amplitude output at the collector of TR55 is differentiated by C64 and R85. D51 passes positive-going pulses to the collector of TR163 in the B sweep circuit.

When S51c is set to TV L, TR54 is converted

into a sync separator and TR55 into an inverter with the addition of C63 across R77, 82 and 83.

When VARIABLE B is pulled out for ungated operation of the B sweep, the trigger B circuit has no effect on the display. The point on the A sweep at which the B sweep starts is determined solely by the setting of the DELAY control.

TIMEBASES

The waveforms, illustrated in Figure 7, are included to assist the reader when studying the circuits of timebases 'A' & 'B' shown in Figures 8 and 9 respectively. It must be noted that the instrument is set in the A INTENS BY B – nongated mode to give the waveforms.

The sweep generator of timebase 'A' consists of a Miller run-up stage TR109, with TR110 as a source follower. TR102 and TR103 form the Single-Shot and Hold-off bistable intercoupled with TR104 and TR105 the sweep-gating bistable.

In the quiescent condition of the timebase, TR102 is on, TR103 off, TR104 off, and TR105 on. D105 and D106 are on holding C_t, the timing capacitor selected by S210/2F (Figure 10), discharged. When a positive-going trigger pulse is applied to the base of TR105 via D1 (Figure 5), R126 and C104, the sweep-gating bistable changes states; TR104 turns on and TR105 off.

The positive potential at TR104 collector turns off D1, preventing further trigger pulses from entering the bistable.

The collector of TR105 goes negative until clamped by D104 slightly below chassis potential. D105 and D106 are then cut off and current flows into C_t through R_t the timing resistor selected by S210/1B and R134 to start the sweep. The gate of TR110 and hence the base of TR109 gradually fall causing TR109 collector to rise, providing a positive-going sweep. The negative excursion of TR110 gate is limited by the large loop gain leaving virtually constant current flow into C_t.

As the collector of TR109 rises, D103 becomes forward biased and C_h the hold-off capacitor selected by S210/1F, charges. The rising voltage across C_h is fed to the base of TR102 until the point, determined by R109, is reached when TR102 turns off and TR103 turns on. The positive potential at TR103 collector turns off TR104 causing TR105 to turn on forward biasing D105. The sweep is thus terminated and the flyback begins.

C_t then discharges through D105 and TR105, causing the gate of TR110 and the base of TR109 to rise.

Although TR104 is off and TR105 on, the sweep-gating bistable is unaffected by incoming trigger pulses since TR104 base is clamped by TR103.

The collector of TR109 falls linearly, due to the Miller action and the flyback ends with the collector of TR109 clamped by D106 at the same level as at the start of the sweep. During the flyback D103 turns off allowing C_h to discharge, taking TR102 base negative. C_h continues to discharge beyond the flyback period until the point, determined by R113, is reached when TR102 turns on and TR103 off thus unclamping the base of TR104. The sweep-gating bistable is then ready to be switched by the next incoming trigger pulses.

In the Free-run condition, TR105 is biased off allowing the sweep to start immediately. The sweep cycle is the same as in the triggered condition until C_h has discharged sufficiently to allow TR102 to turn on, and TR103 off. As soon as the base of TR104 is unclamped, TR105 immediately turns off again due to the positive bias on its base and the sweep cycle recurs continuously.

When the Single-shot condition is selected, a positive bias is applied to the base of TR102. The sweep cycle is as above until the point when C_h discharges.

When C_h has discharged, TR102 does not turn on again, due to the positive bias on its base, and a positive going reset pulse must be applied to the base of TR103 to switch the single-shot and hold-off bistable over and thus unclamp TR104 base. In the triggered condition the sweep will not begin until a trigger pulse initiates it. After a single sweep "lockout" occurs, TR104 base is clamped until the reset button is depressed to "arm" the sweep. The free-run condition allows the sweep to cycle once up to the point where TR104 base remains clamped. Pressing the reset button switches the sweep-gating bistable unclamping TR104 base and the positive bias on TR105 base turns it off causing a single sweep to occur immediately.

In the Delay circuit TR111 and TR112 form a Schmitt trigger circuit with TR111 non-conducting

and TR112 conducting in the quiescent condition of the timebase: The DELAY control, R139, determines the reverse bias at the base of TR111. A portion of the positive going 'A' sweep is also fed to TR111 base via R142, driving it positive until the point, determined by the delay setting, is reached when TR111 turns on, and hence TR112 turns off, its collector going positive. This condition is maintained until the sweep ends and the negative going flyback allows TR111 to turn off and thus TR112 to turn on, its collector going negative.

A positive going step waveform, coinciding with the start of the 'A' sweep is also fed to the base of TR111 from TR113 collector via R154, to rapidly overcome the bias when a small delay time is required.

The differentiated output from TR112 collector is fed to the base of TR162 in timebase 'B', the positive going edge resetting the delayed sweep, and the negative going edge terminating it, should its duration exceed the remaining 'A' sweep.

The sweep generator circuit of timebase 'B' is essentially the same as timebase 'A' with a Miller run-up stage TR165 driven by TR166 a source follower. The bistable formed by TR161 and TR162 is intercoupled with the sweep-gating bistable, TR163 and TR164. The sweep generator is permanently connected in the single-shot condition, with R161 returned to the 115 V h.t. supply except when the test link is removed for calibration, chapter 4.26.1 refers. Two operating modes are obtainable: B DEL'D non-gated and gated sweep.

In the non-gated mode, before the start of the 'A' sweep, TR161 is held off by the positive base bias via R161, causing TR162 to conduct. The resultant positive potential at TR162 collector clamps the base of TR163 positive, causing TR163 to cut off and TR164 to conduct. The positive collector potential of TR164 holds D163 and D164 on maintaining C_t discharged.

During the 'A' sweep, at a point determined by the DELAY control, the delay circuit bistable changes state, the resulting output providing a positive-going pulse at the base of TR162, turning it off and TR161 on. TR163 is now unclamped and the bias at the base of TR164, due to the position of S161, causes it immediately to turn off and TR163 on. TR164 collector goes negative until clamped by D162 turning on. D163 and D164 are thus cut-off and the current flows into C_T via R_T and R184 to start the sweep. The positive-going sweep turns on D161 and continues until TR161 turns off and TR162 on, its collector clamping TR163 off and TR164 on. The 'B' sweep is then terminated and flyback occurs, C_t discharging through D163 and TR164 until D164 conducts. The quiescent condition is now restored with D163 and D164 holding C_t discharged. The circuit remains in this condition until the next positive pulse from the delay circuit initiates another delayed sweep during the next 'A' sweep.

In the gated mode of the 'B' sweep, the positive pulse from the delayed circuit during the 'A' sweep, referred to above, turns TR162 off and TR161 on. Although TR163 base is now unclamped, the gate-sweeping bistable does not immediately change state, due to the position of S161, reducing the positive bias at TR164 base and remaining unswitched until the next incoming pulse, from the trigger 'B' circuit, appears at TR163 collector to switch over the bistable and start the sweep. The sweep gate then continues as above until the quiescent condition is restored.

Should the duration of the delayed sweep exceed that remaining of the 'A' sweep in either the gated or non-gated mode, it is terminated by the negative going pulse from the delay circuit coinciding with the end of the 'A' sweep.

HORIZONTAL AMPLIFIER

Figure 11 shows the external horizontal or sawtooth waveform from either timebase 'A' or 'B' coupled, via the display switch S275, to the base of TR276, an operational amplifier, where it is mixed with the D.C. potentials from the POSITION and FINE position controls. The gain switch, S276, determines the feedback required to give x1 and x5 horizontal magnification. The output from the collector of TR276 is coupled to the base of TR277, which, with TR278 forms a push-pull output amplifier driving the CRT 'X' plates (Fig. 13). D282 prevents saturation of TR277 and R292 balances the amplifier with no voltage across the gain switch. The mean output potential of the amplifier is set by R297.

UNBLANKING AMPLIFIER

If reference is made to Figure 12, it will be seen that TR261 and TR262 form a feedback amplifier whose output collector is connected to g_1, control grid, of the C.R.T., reference Figure 13.

TR253 and TR254 form a bistable triggered by the differentiated pulses from amplifier TR251 via C251. TR253 output collector current drives the feedback amplifier.

A second bistable, TR255 and TR256, also drives the feedback amplifier via emitter follower TR257, this bistable being triggered by the pulses from TR252 via C252.

TR258 and TR259 form a two stage pulse amplifier, TR258 driving the feedback amplifier in the chopped mode of the vertical amplifier.

In the quiescent condition of the horizontal deflection system, TR253 and TR257 are conducting; the current taken by them biases off the feedback amplifier causing a voltage to appear across TR261. This voltage is in series with that across the brilliance control, R305 (Figure 13), and results in the negative grid bias cutting off the CRT beam.

The two bistables are switched according to the display mode selected by S275: In the 'A' mode, the emitters of TR251 and TR252 are connected to TR113 in timebase 'A' (Figure 8). At the start of the 'A' sweep, the negative-going potential at TR105 collector drives the base and hence the emitter of TR113 negative thereby allowing TR251 and TR252 to conduct, their collectors going negative. These negative-going pulses fed to TR254 and TR256 bases, switch both bistables over, TR254 on and TR253 off, also TR256 on and TR255 off and hence TR257 off. TR261 turns fully on, reducing the voltage across it to nearly zero; and the grid to cathode voltage of the CRT to that across the brilliance control, allowing the beam to appear on the CRT screen. This condition is maintained for the duration of the 'A' sweep. The positive excursion of TR105 collector which terminates the 'A' sweep, takes TR113 base and emitter positive which in turn drives the emitters of TR251 and TR252 positive. The positive potential at their emitters causes TR251 and TR252 to stop conducting and the resultant positive-going pulses at their collectors cause both bistables to change states again; restoring the quiescent condition with the CRT beam blanked.

In the A INTENS BY 'B' mode, the emitter of TR251 is connected to TR113 in timebase 'A' (Figure 8) and TR252 emitter to TR167 in timebase 'B' (Figure 9). Both TR253 and TR257 are conducting before the start of the 'A' sweep, causing the amplifier TR261 and TR262 to blank the beam as above. At the start of the 'A' sweep TR251 turns on, its negative-going collector potential switching over the bistable TR253 and TR254. Since TR253 is non-conducting, the reduced bias on TR262 base allows TR261 to conduct more heavily, the voltage across it falls to a low value determined by the current taken by TR257 which is still conducting. The trace is then partially unblanked and visible on the CRT screen. This condition is maintained until the start of the 'B' sweep, when TR167 turns off and allows TR252 to turn on. The negative excursion of TR257 collector switches over the second bistable TR255 and TR256. Consequently TR257 turns off, allowing the feedback amplifier to turn fully on and the trace to reach its full brightness level determined by the brilliance control. At the end of the 'B' sweep TR167 and TR252 switch back the bistable TR255 and TR256. Thus TR257 conducts biasing the feedback amplifier off slightly and reducing the traces brightness to its original level.

The termination of the 'A' sweep causes bistable TR253 and TR254 to change states, and the increased bias due to TR253 conducting turns off the feedback amplifier resulting in blanking of the trace.

In the B DEL'D mode, both TR251 and TR252 emitters are connected to TR167 in timebase 'B' causing the trace to bright up for the duration of the 'B' sweep only.

In the chopped mode of the vertical amplifier, positive-going pulses are fed to the base of TR259 via C636 and C637, (Fig. 3). During the switching transition of the channel-switching multivibrator, TR259 conducts the resultant negative pulses at its collector to the base of TR258, via C257, causing it also to conduct. The pulses of current taken by TR258 bias off the feedback amplifier thus suppressing the display of switching transients.

When EXT.X mode is selected, relay RL275 is energised forward biasing D255 and D254, thus

ensuring that TR254 and TR256 are conducting. The feedback amplifier is thus unaffected by the bistables and maximum trace brightness is obtained.

POWER SUPPLIES

The power supplies consist of a +12 V, −12 V, +115 V, +8.5 kV, reference Figure 14 and a −1.55 kV supply, reference Figure 13.

For the +12 V supply, TR404, TR412 and TR413 form a series voltage stabilizer, the output voltage being established by the ratio of R435, R436, R437 and the reference diode D423. Any fluctuation in the output voltage is cancelled out by the high-gain negative feedback loop. All control currents are obtained from the output side of the series element so that a short circuit on the output turns off TR404 without damage to components.

The −12 V supply operates in the same way as the +12 V supply with TR406, TR408 and TR411 forming a series stabilizer using the +12 V as the reference voltage.

TR402, TR403 and TR405 form the series stabilizer for the +115 V supply using the above −12 V as the reference voltage. D421 protects the series transistor in the event of a short circuit on the output and R403 provides short term current limitation.

For the −1.55 kV supply, the voltage across C405, C406, C428, C407, C429 and C408 is effectively in series with the regulator transistors TR401 and TR407, the collector of TR401 being positive with respect to ground and output being negative. The +115 V is used as a reference voltage and the reference potentiometer is formed by R404, R411, R301, R302, R303, R304 and D301. R404 sets the voltage at the base of TR409, an emitter follower which drives TR407. A.C. feedback is supplied by C417. Any change in output voltage is fed to the base of TR409, which drives the collector of TR401 in the opposite direction, maintaining the voltage between output and ground constant.

The +8.5 kV supply for the CRT PDA is obtained from the voltage multiplier C402, C403, C410, C411, D401, D402, D410 and D411.

The 500 mV peak to peak squarewave calibrator output is developed across R406 by using the 13.7 V A.C. output from the power transformer to switch D419 alternately on and off. D419 is in series with the divider chain R414, R409 and R406 between the −12 V and chassis. R414 is used to set the current through the chain and consequently the voltage developed across R406.

CHAPTER 4

MAINTENANCE AND CALIBRATION

GENERAL

The entirely solid-state design of the instrument should render frequent readjustment of the internal preset controls unnecessary; however, to ensure the maintenance of full measurement accuracy, it is desirable to make an occasional check on the vertical amplifier sensitivity and the timebase sweep speed. The internally generated 500 mV peak to peak calibration waveform may conveniently be used for these checks.

CHECK SWEEP SPEED. Remove cabinet sides as described in the following Mechanical paragraph. Push FINE position in. Set TIME/DIV to 10 ms and VARIABLE fully clockwise, with INPUT and CAL linked, adjust other controls for a locked display.

50 Hz supply: Check SET SPEED for 1 cycle/2 divs.
60 Hz supply: Check SET SPEED for 3 cycles/5 divs.
400 Hz supply: Switch TIME/DIV to 1 ms and check SET SPEED for 2 cycles/5 divs.

Note: To maintain the measuring accuracy, it is advisable to refer to the Set Speed Procedure, Op. 21.0, page 4/4, as line frequency may vary.

GAIN CHECK. Vertical amplifier may be checked as follows:

Set CH1 and CH2 VOLTS/DIV to .1, turn VARIABLE fully clockwise, and set DC-GND-AC to DC.

Apply the 500 mV peak to peak CAL waveform to INPUT 1 and adjust POSITION, TRIGGER and SWEEP control for a convenient display.

Adjust R671. Set Gain for 5 divs. amplitude.

Remove CAL from INPUT 1, apply to INPUT 2 and adjust controls as necessary for a display triggered by Channel 2.

Adjust R672. Set Gain for 5 divs. amplitude.

NOTE: The VARIABLE gain controls must remain fully clockwise.

Should a more complete calibration be required, such as in the event of transistor replacement, reference should be made to the appropriate procedure in the Calibration paragraph of this chapter. It should be noted that TR623 with TR624 and TR625 with TR626 are matched pairs.

Before it is assumed that a fault condition exists, control settings should be verified with reference to the Pre-Operational Check, page 2/3.

MECHANICAL

LOCATION OF PRESET CONTROLS. Attenuator trimmers are accessible from the left-hand side, front, after the covers have been removed. PC75 carries the circuits for the timebase and power supplies, which is situated on the right-hand side and PC76, the vertical amplifier on the left-hand side. The boards are marked with a legend to facilitate component identification.

ACCESS TO INTERIOR. Disconnect the mains supply. To remove the cabinet sides, loosen the two handle-clamp securing screws, ease the top of each side outwards and unhook the bottom of each side from the locating slots in the chassis base.

The chassis base cover plate is secured by six fixing screws, one at each corner and one half-way along each side.

CRT REMOVAL AND REPLACEMENT. Remove both cabinet sides, as described above, and the rear cover; this is secured by a screw at each corner. Unplug the PDA cap and earth both male and female connectors on the cap and CRT respectively, ensuring that the residual charge has been fully discharged. Unplug the 12-pin socket, trace rotation coil plug, the latter from the left-hand board, and five pin connectors. Remove the three screws holding the mumetal screen, move CRT and screen towards the rear to clear the front panel; moving the forward end of the CRT to the left. Remove the CRT and screen from the instrument, adhesive tape and rear location moulding from the CRT, then the CRT from the screen; transfer TRACE ROT'N coil and rubber packing.

Fit in reverse order ensuring that the CRT forward end is located in the rubber moulding behind the front panel. If the TRACE ROT'N control does not provide an adequate range of adjustment, reverse the trace rotation plug.

CALIBRATION

The following procedure enables a full calibration of the instrument to be accomplished.

If any step or steps are carried out in isolation, regard should be paid to the risk of interaction with other adjustments also to control settings and waveforms applied in earlier steps.

IMPORTANT

Never adjust the potentiometers controlling the voltages of the stabilised lines (R404, 421, 431 or 436) unless it is intended to carry out a complete calibration of the instrument.

PROBE

Waveform required 0.5 V peak to peak 1 kHz squarewave or step waveform from GATE OUT front-panel outlet.

COMPENSATION. Connect x10 probe to INPUT socket, apply tip to 0.5 V peak to peak squarewave source or GATE OUT. If the squarewave is used, adjust controls to display a few cycles of the waveform. Set VOLTS/DIV to 10 mV and adjust probe trimmer for square corners. The compensation should be rechecked if the probe is transferred to the other channel.

A sweep speed of 1 ms/div is recommended when using the GATE OUT waveform; set VOLTS/DIV to 100 mV; the leading corner of the step waveform should be adjusted for optimum squareness, that is, for the starting point to be level with the rest of the trace.

The HZ1B probe trimmer has a screwdriver adjustment through a hole in the probe body.

To compensate the type GE81000 probe, slacken the narrower of the two knurled rings at the oscilloscope end of the probe lead and rotate the adjacent broader ring until correct compensation is obtained. Tighten the narrower ring, ensuring that the setting of the broader ring is not disturbed.

PRELIMINARY

1.0 With the instrument disconnected from the supply, remove the cabinet sides by partially unscrewing the carrying-handle securing clamps and moving the tops of the sides outwards.

2.0 Set all internal presets to mid-position.

3.0 Measure the resistances of the four stabilised lines to chassis. Resistances should be approximately as follows:

Line	Test point	Resistance
Volts		Ohms
+ 12	147	250 – 350
– 12	148	350 – 500
+ 115	149	1.5 – 3 k
– 1.45 k	CRT cathode pin 7	2 M or greater

4.0 Insert the voltage-selector plug in the rear panel with the arrow indicating the nominal voltage of the local A.C. supply or the nearest value to it.

5.0 Connect the oscilloscope's power cable to a metred variable transformer. The cores of the cable are alternatively colour-coded as follows:

Line	Neutral	Earth (Ground)
Brown	Blue	Green/Yellow
Black	White	Green

Connect the transformer to the supply and switch on supply and oscilloscope.

6.0 Adjust the variable transformer to give the same voltage as that indicated by the voltage-selector plug.

POWER SUPPLY

NOTE: 7 through 10 below must be performed in numerical sequence.

7.0 Set +12 V line: R436

Connect D.C. voltmeter with negative to chassis and positive to tag 147. Adjust R436 for a reading of 12 V.

8.0 Set – 12 V line: R431.

Connect voltmeter positive to chassis and negative to tag 148. Adjust R431 for a reading of 12 V.

9.0 Set +115 V line: R421

Connect voltmeter negative to chassis and positive to tag 149. Adjust R421 for a reading of 115 V.

10.0 Set CRT cathode volts (– 1.45 kV): R404

Connect voltmeter positive to chassis and negative to CRT cathode (pin 7 on socket). Adjust R404 for a reading of 1.45 kV.

Switch off, remove variable transformer, connect oscilloscope to supply and switch on.

INITIAL SETTINGS

11.0 Set initial conditions

11.1 Set front-panel controls as follows:

POSITION (CH1 & 2)	Central
OFF-ON (CH1 & 2)	OFF
TIME/DIV A	1 ms
VARIABLE A	Pulled out
DISPLAY	A
POSITION (horizontal)	Central
FINE	Central and pushed in

11.2 After advancing BRILLIANCE, adjust preset R125 to provide free-running trace.

11.3 Adjust FOCUS and ASTIG for best definition.

11.4 Depress CH1 OFF-ON button and adjust R635 to centre trace.

HORIZONTAL AMPLIFIER

12.0 Set mean X-plate potential: R297.

12.1 Switch TIME/DIV A to EXT X, connect a D.C. voltmeter between the collectors of TR277 and TR278, pins 171, 172. Adjust horizontal POSITION and FINE for a reading of 0 V.

12.2 Connect voltmeter with negative to chassis and positive to the collector of TR278, pin 172. Adjust R297 for a reading of 52.5 V.

12.3 Repeat 12.1 and 12.2 until correct conditions are obtained.

13.0 Set horizontal D.C. balance: R292.

13.1 Pull out FINE for x5 gain and centre the spot on the graticule with POSITION and FINE.

13.2 Push in FINE and recentre the spot with R292.

13.3 Repeat 12 and 13 above, until there is no spot movement when switching between x1 and x5 gain and the conditions in 12, above are met.

14.0 Set external horizontal D.C. balance: R137.

Pull out FINE for x5 gain. Adjust R137 for no spot movement when the EXT X and GND sockets are intermittently shorted together.

15.0 Set external horizontal input compensation: C113 on TIME/DIV switch.

With x5 horizontal gain, apply a 2.5 V peak to peak 10 kHz squarewave between EXT X and GND sockets. Adjust C113 for minimum width of intensified areas at the ends of the trace. Push in FINE and remove squarewave.

CATHODE RAY TUBE

16.0 Set trace alignment: TRACE ROT'N (at rear).

Set TIME/DIV A to 1 ms and adjust TRACE ROT'N to align trace with centre graticule line. If the trace cannot be aligned, reverse the 2-pin plug at bottom rear of the left-hand etched circuit board then adjust TRACE ROT'N.

17.0 Set geometry: R309.

Apply a 100 kHz or higher frequency sinewave to CH1. Adjust VOLTS/DIV and the sinewave amplitude to provide a raster whose top and bottom edges are just within the display area. Adjust R309 for minimum curvature at the edges of the raster. Disconnect the sinewave generator.

SWEEP TRIGGER A

18.0 Set automatic A and trigger sensitivity A: R12 and R33.

18.1 Set TIME/DIV A to EXT X, TIME/DIV B to OFF, TRIG MODE A to INT, all other buttons out and LEVEL A & B to AUTO. Set CH1 & 2 INPUT switches to GND. Connect the test oscilloscope set to 0.1 V/div and 20 ms/div to the collector of TR3 (tag 124).

18.2 Turn R33 fully anti-clockwise and adjust R12 to the centre of the range over which a continuous oscillation, at about 1 MHz, is observed on the test oscilloscope.

18.3 Turn R33 slightly clockwise and reset R 12 to the centre of the range of oscillation.

18.4 Repeat 18.3 until the oscillation is replaced by a triangular waveform at about 20 Hz.

18.5 Adjust R12 and R33 to give a symmetrical waveform of 100 mV peak to peak. Disconnect test oscilloscope.

SWEEP GENERATOR A

19.0 Set sweep length A: R109.

With DISPLAY set to A, switch TIME/DIV A to 0.5 ms and ensure VARIABLE A is pulled out. Adjust R109 for 10.2 divs trace length.

20.0 Set sweep hold-off time A: R113.

Apply test oscilloscope to SAWTOOTH OUT socket and adjust R113 to make the duration of hold-off equal to the duration of flyback. That is, for the horizontal portion of the display to be equal in time to the negative-going portion. Disconnect the test oscilloscope.

21.0 Set 0.2 ms timing A: R143.

21.1 Push in VARIABLE A and set the control fully clockwise. Set TIME/DIV A to 0.2 ms and ensure that FINE is pushed in.

21.2 Set CH1 INPUT to AC and apply 100 µs time markers or a 10 kHz squarewave to CH1. Depress CH1 INT TRIG button; if necessary reset R125 for a locked display. The LEVEL A control may then be used to lock the display. Set R143 for 2 markers per division.

21.3 Reset R109 if necessary for 10.2 divs. trace length.

22.0 Set x5 gain: R285.

Pull out FINE then adjust R285 for 2 markers or 2 cycles of squarewave over 5divs. Push in FINE.

23.0 Set 0.2 µs timing A: C219A on T/DIV switch.

23.1 Ensure that VARIABLE A is pushed in and fully clockwise. Switch TIME/DIV A to 0.2 µs and apply 1 µs time markers or a 1 MHz squarewave to CH1.

23.2 Using a non-capacitive trimming tool, adjust C219A, on A TIME/DIV switch, for 1 marker or 1 cycle of squarewave over 5 divisions.

24.0 Set 0.2 µs sweep length A: C114.

Adjust C114 for the same 10.2 div. trace length as set by R109, reference 19, on the 0.2 ms range. Remove markers or squarewave.

25.0 Set stability A: R125.

NOTE This adjustment is best made using a composite sync or video television waveform. If this is available perform 25.1 to 25.5, if not, carry out the alternative procedure in 25.7 to 25.9.

25.1 Switch TIME/DIV A to 0.5 ms, LEVEL A to AUTO and TRIG MODE A to TV F. Apply the sync or video waveform to CH1 and adjust the amplitude to about 1 division.

25.2 Set R125 fully anti-clockwise then turn it gradually clockwise until display just locks.

25.3 Pull out VARIABLE A and check that trace free-runs.

25.4 Depress SINGLE-SHOT then RESET, check that sweep fires each time RESET is depressed.

25.5 Push in VARIABLE A and depress RESET, check that a triggered sweep is obtained each time RESET is depressed.

NOTE If all these conditions are not met, repeat 25.2 to 25.5 with R125 very slightly more clockwise. Remove television waveform and return TRIG MODE A and SINGLE-SHOT to NORMAL. Since a television waveform has been used, do not perform 25.6 to 25.9 but proceed to 26.0.

25.6 If a television waveform is not available, proceed as follows:

Set TIME/DIV A to 0.5 ms, LEVEL A to AUTO, TRIG MODE A to NORMAL, +, INT. Apply 1 kHz squarewave to CH1 and adjust the amplitude of display to 1div. With VARIABLE A pushed in, set R125 fully anti-clockwise then turn R125 gradually clockwise until a locked trace just appears.

25.7 Pull out VARIABLE A and check that sweep free-runs.

25.8 Depress SINGLE-SHOT then RESET. Check that a sweep ensues each time RESET is pressed.

25.9 Push in VARIABLE A and press RESET. Check that a triggered sweep results each time RESET is pressed.

If all these conditions are not obtained, repeat 25.7 to 25.9 with R125 very slightly more clockwise. Remove 1 kHz squarewave and release SINGLE-SHOT.

SWEEP TRIGGER B

26.0 Set trigger balance B and trigger sensitivity B: R62 & R82.

26.1 Switch off oscilloscope and unplug link from tag 153; the link is replaced in 32.5.

26.2 Switch on, set TIME/DIV A to EXT X, TIME/DIV B to OFF, both LEVEL controls to AUTO and select NORM, +, INT with TRIG MODE B. Ensure both DISPLAY buttons are out.

26.3 Apply 1 kHz squarewave to CH1 and adjust for a 0.2 division display.

26.4 Apply test oscilloscope to tag 125 at the collector of TR55 and adjust R62 and R82 to give

a squarewave display on the test oscilloscope about 4 V in amplitude.

26.5 Set R62 to centre of range over which squarewave appears.

26.6 Set R82 as far clockwise as possible while still retaining the squarewave display.

26.7 Repeat 26.5 and 26.6 until R82 cannot be set any further clockwise without loss of squarewave. Remove test oscilloscope.

SWEEP GENERATOR B

27.0 Set horizontal balance B: R187.

With TIME/DIV B at OFF, set DISPLAY to B DEL'D and pull out FINE. Adjust R187 for no movement of the spot when the feed-through on the TIME/CM switch bracket (with 1 MΩ resistor attached) is intermittently shorted to the chassis. Remove 1 kHz squarewave.

28.0 Set sweep length B: R165.

With TIME/DIV A at EXT X, push in FINE, set TIME/DIV B to 0.5 ms and pull out VARIABLE B. Adjust R165 for 10.2 divs. length of trace. If necessary adjust R179 to obtain trace.

29.0 Set sweep hold-off time B: R168.

Apply test oscilloscope to the collector of TR165 and adjust R168 to make the duration of hold-off equal to the duration of flyback. Remove test oscilloscope.

30.0 Set 0.2 ms timing B: R186.

30.1 Check that DISPLAY is at B DEL'D, FINE is pushed in and TRIG MODE B is at NORM, +, INT. Push in VARIABLE B and set fully clockwise. Switch TIME/DIV B to 0.2 ms.

30.2 Apply 100 µs markers or a 10 kHz squarewave to CH1. If necessary adjust R179 for a locked display.

30.3 Adjust R186 for 2 markers or 2 cycles of squarewave per division. LEVEL B may be used to ensure best triggering on markers.

30.4 Reset R165 if necessary for 10.2 divs. trace length.

31.0 Set 0.2 µs timing B: C219B mounted on the TIME/DIV switch.

Ensure VARIABLE B is fully clockwise. Switch TIME/DIV B to 0.2 µs and apply 1 µs markers or a 1 MHz squarewave to CH1. Using a non-capacitive trimming tool, adjust C219B for 1 marker or 1 cycle of squarewave over 5 divs.

32.0 Set stability B: R179.

32.1 With LEVEL B at AUTO, TRIG MODE B at NORM, +, INT and VARIABLE B pushed in, switch TIME/DIV B to 0.5 ms.

32.2 Apply 1 kHz squarewave to CH1 and adjust the amplitude of display to 1 division.

32.3 Turn R179 fully clockwise then anti-clockwise till the display disappears; turn back to a midway position.

32.4 Pull out VARIABLE B and check that sweep free-runs.

32.5 Switch off oscilloscope and replace link removed in 26.1.

32.6 Switch on, push in VARIABLE A & B, set DISPLAY to A INTENS BY B, DELAY to 5.00, TIME/DIV B to 20 µs, TIME/DIV A to 1 ms, LEVEL A to AUTO and TRIG MODE A to NORM, +, INT. Short EXT B trigger connector to GND and check that with rotation of DELAY the intensified portion of the trace moves across the trace in a series of jumps; if not readjust R179.

32.7 Release INT-EXT B TRIG MODE button and check that the intensified portion disappears, if not, reset R179 and recheck 32.6 and 32.7.

32.8 Pull out VARIABLE B. Check that the intensified portion of the display can be moved steadily across the screen with DELAY control; if not, reset R179 and recheck 32.6 to 32.8. Remove squarewave and the connection to GND from the EXT B trigger connector.

VERTICAL AMPLIFIER

33.0 Set CH1 variable balance: R644.

33.1 Depress ALT button and select CH1 ON and CH2 OFF. Set CH1 VARIABLE fully clockwise, CH1 VOLTS/DIV to 10 mV and set CH1 INPUT to GND. Select A sweep display, pull out VARIABLE A and set TIME/DIV A to 1 ms. Align the trace with centre graticule line with CH1 POSITION.

33.2 Turn CH1 VARIABLE fully anti-clockwise and centre trace with R644.

33.3 Turn CH1 VARIABLE fully clockwise and recentre trace with CH1 POSITION.

33.4 Repeat 33.2 and 33.3 until there is no trace movement as CH1 VARIABLE is rotated throughout its range.

34.0 Set CH1 position balance: R635.

With CH1 VARIABLE fully anti-clockwise, adjust R635 so that CH1 POSITION gives equal movement of the trace about the graticule centre line.

35.0 Set CH1 gain: R671.

Push in VARIABLE A and set CH1 VARIABLE fully clockwise, CH1 VOLTS/DIV should be at 10 mV. Switch CH1 INPUT to DC and apply a 50 mV peak to peak 1 kHz squarewave. Adjust R671 for exactly 5 divs between the flat portions of display.

36.0 Set CH1 10 mV/div input capacitance: C621.

Set TIME/DIV A to 0.2 ms and use a non-capacitive trimming tool to adjust C621 for square corners on the displayed 50 mV squarewave.

37.0 Set CH1 input capacitance and 20 mV/div attenuator compensation: C914 on the VOLTS/DIV switch.

Switch CH1 VOLTS/DIV to 20 mV and increase squarewave amplitude to 100 mV peak to peak. Adjust CH1 20 mV attenuator trimmer (C914) for square corners on display.

38.0 Set CH1 20 mV/div input capacitance: C630.

38.1 Turn CH1 VARIABLE fully anti-clockwise and adjust C630 for square corners.

38.2 Repeat 36, 37 and 38 for square corners in all specified conditions.

39.0 Set CH1 attenuator compensation:

39.1 With CH1 VARIABLE fully clockwise adjust each trimmer for square corners on display using appropriate VOLTS/DIV switch setting and amplitude of squarewave.

CH1 VOLTS/DIV	Squarewave 1 kHz	Adjust
Volt	Volt	
50 m	0.25	C916
0.1	0.5	C907
0.2	1	C913
0.5	2.5	C912
1	5	C906
10	50	C905

The 20 mV/div range has been adjusted in 38.

39.2 Connect a compensated x10 probe between squarewave generator and INPUT 1. Adjust C904, C903 and C902 for square corners.

CH1 VOLTS/DIV	Squarewave 1 kHz	Adjust
Volt	Volt	
0.1	5	C904 (0.1V probe)
1	50	C903 (1V probe)
10	>100	C902 (10V probe)

The procedure for probe compensation is given under GATE OUT in the Operating Instructions section. Remove squarewave.

40.0 Set CH2 variable balance: R647.

40.1 Select CH2 ON and CH1 OFF. Set CH2 VARIABLE fully clockwise, CH2 VOLTS/DIV to 10 mV and CH2 INPUT to GND. With TIME/DIV A set to 1 ms and VARIABLE A pulled out, centre the trace with CH2 POSITION and R636 if necessary.

40.2 Turn CH2 VARIABLE fully anti-clockwise and align trace with graticule centre line with R647.

40.3 Turn CH2 VARIABLE fully clockwise and recentre the trace with CH2 POSITION.

40.4 Repeat 40.2 and 40.3 until there is no trace movement as CH2 VARIABLE is rotated throughout its range.

41.0 Set CH2 position balance: R636.

With CH2 VARIABLE fully anti-clockwise adjust R636 so that CH2 POSITION gives equal movement of the trace about the graticule centre line.

42.0 Set CH2 gain: R672.

This step assumes that CH1 gain has been correctly set in 35 above.

42.1 With both VOLTS/DIV switches at 10 mV, VARIABLE controls fully clockwise and INPUT switches at DC, apply the same 1 kHz 50 mV peak to peak squarewave to both inputs. Depress CH1 OFF-ON button and release CH1 INT TRIG.

42.2 Adjust POSITION controls to superimpose traces and adjust R672 to make the amplitude of the CH2 display exactly the same as that of CH1.

42.3 Depress CH2 INT TRIG button and release CH1 OFF-ON. Remove squarewave from CH1 only.

43.0 Set CH2 10 mV/div input capacitance: C623.

With 50 mV peak to peak squarewave applied to CH2 and CH2 VARIABLE fully clockwise, using a non-capacitive trimming tool, adjust C623 for square corners on display.

44.0 Set CH2 input capacitance and 20 mV/div attenuator compensation: C914 on V/DIV switch.

Switch CH2 VOLTS/DIV to 20 mV and increase squarewave amplitude to 100 mV peak to peak. Adjust CH2 20 mV attenuator trimmer (C914) for square corners.

45.0 Set CH2 input capacitance: C631.

45.1 Turn CH2 VARIABLE fully anti-clockwise and adjust C631 for square corners.

45.2 Repeat 43, 44 and 45 for square corners in all specified conditions.

46.0 Set CH2 attenuator compensation.

46.1 Set CH2 VARIABLE fully clockwise and adjust each trimmer in turn for square corners using the appropriate VOLTS/DIV switch setting and squarewave.

CH2 VOLTS/DIV	Squarewave 1 kHz	Adjust
Volt	Volt	
50 m	0.25	C916
0.1	0.5	C907
0.2	1	C913
0.5	2.5	C912
1	5	C906
10	50	C905

The 20 mV/div trimmer has been set in 44 above.

46.2 Connect a compensated x10 probe between the squarewave generator and CH2. Adjust C904, C903 and C902 for square corners.

CH2 VOLTS/DIV	Squarewave 1 kHz	Adjust
Volt	Volt	
0.1	5	C904 (0.1V probe)
1	50	C903 (1V probe)
10	> 100	C902 (10V probe)

47.0 Set CH1 neutralising: C639 & 641.

47.1 Depress CH1 OFF-ON and INT TRIG buttons, set CH2 INPUT to GND and ensure that CH1 VOLTS/DIV is set to 10 mV and CH1 INPUT is at DC. Set TIME/DIV A to 0.2 µs and apply a 1 MHz squarewave to CH1. The connecting cable must be terminated at the oscilloscope end with a termination to match the output impedance of the squarewave generator.

47.2 Adjust amplitude of squarewave for a 5 divisions display on CH1.

47.3 Adjust C639 & 641 to produce minimum interaction of CH1 display on CH2 trace. The physical settings of C639 & 641 should be as nearly as possible equal; this is determinable by the relative positions of the rotor and stator vanes.

48.0 Set CH2 neutralising: C642 & 643.
Apply the 1 MHz signal to CH2.

Switch CH1 INPUT to GND and CH2 INPUT to DC, depress CH2 INT TRIG button. Adjust C642 & 643 for minimum interaction of CH2 on CH1 trace. The settings of C642 & 643 should be as nearly as possible equal. Remove squarewave.

49.0 Set sum mode position balance: R630.

49.1 Set CH2 INPUT to GND and ensure ALT button is depressed. Centre both traces on the graticule centre line with POSITION controls.

49.2 Release ALT button for SUM mode then centre the trace with R630.

50.0 Set high-frequency compensation: C646, C647, C649, C651, R699, R703, R706, L621 & L622.

50.1 Fully unscrew, without removing, the cores of L621 & L622. Set R699 & R703 fully clockwise for minimum resistance. Set rotor vanes of C646 & C647 fully out of mesh for minimum capacitance. Set TIME/DIV A to 5 µs.

50.2 Apply the output of a 100 kHz fast-rise squarewave generator to CH1. The connecting cable must be correctly terminated.

50.3 Triggering from CH1, adjust controls for a locked display of about 3 divisions in amplitude.

50.4 Adjust C651 for squarest corners without overshoot.

50.5 Change squarewave frequency to 1 MHz and set TIME/DIV A to 0.2 µs. Adjust R706 & C649

alternately for square corners and flat tops; R706 should be set as far as possible clockwise whilst maintaining squareness of corners and flatness of tops. The flatness of the tops is best checked by reducing sweep speed to about 5 µs/division.

50.6 Return to 100 kHz squarewave and 5 µs/div sweep speed and readjust C651 for square corners.

50.7 Repeat 50.5.

50.8 Set TIME/DIV A to 0.2 µs and adjust C646 for maximum overshoot at corners. If there is ringing on the trailing edge of the overshoot, turn R699 slightly anti-clockwise to just eliminate it.

50.9 Eliminate overshoot with C646 to give squarest corners.

50.10 Gradually screw in the cores of L621 & L622 alternately until the leading edge of the squarewave is as nearly vertical as possible without producing overshoot at the corners.

50.11 Remove 1 MHz squarewave from CH1 and apply to CH2. Depress CH2 INT TRIG button and adjust controls for a locked display.

50.12 Adjust C647 for maximum overshoot on corners. If there is ringing on the trailing edge of the overshoot, turn R703 slightly anti-clockwise to just eliminate it.

50.13 Eliminate overshoot with C647 to give squarest corner. Remove input.

51.0 Set internal 500 mV calibrator: R414.

51.1 Set CH1 VOLTS/DIV to .1 and ensure CH1 VARIABLE is fully clockwise. Depress CH1 INT TRIG button and set CH1 DC-GND-AC to DC.

51.2 Apply accurate 500 mV peak to peak squarewave to CH1 and note precisely the amplitude of display; this should be 5 divisions if 35, above, has been correctly carried out.

51.3 Remove squarewave and apply signal from CAL 500 mV peak to peak socket.

51.4 Adjust R414 for exactly the same amplitude as found in 51.2.

CHAPTER 5

COMPONENT LIST

Values of resistors are stated in ohms or multiples of ohms; ratings at 70°C are in watts or sub-multiples of watts. Carbon resistors are of 5% tolerance and 125 mW rating unless otherwise shown. Values of capacitors are stated in sub-multiples of farads; ratings at 70°C are in volts or kilovolts.

Whenever possible, exact replacements for components should be used, although locally available alternatives may be satisfactory for standard components.

Any order for replacement parts should include:

1. Instrument type
2. Instrument serial number
3. Component circuit reference
4. Component part number
5. Component value

CIRCUIT REFERENCE BLOCKS

The table below gives the blocks of circuit references, so that the reader can relate the items listed in this chapter and their location in the circuitry and printed circuit boards in chapter 6.

Circuit Reference		Circuit	Fig.	P.C. Board No
From	To			
1	50	Trigger 'A'	5	75
51	100	'B'	6	75
101	160	Timebase 'A'	8	75
161	200	'B'	9	75
201	240	Time/Div switch	10	No Board
241	280	Unblanking Amplifier	12	75
281	300	X Amplifier	11	75
301	400	C.R.T.	13	75
401	600	Power Supplies	12	75
			13	
			14	
601	700	Y Amplifier	3	76
701	900		4	76
901	1000	Attenuator	2	146

(763)

ABBREVIATIONS

BM	Button mica				
C	Carbon	CV	Carbon variable	PE	Polyester
CER	Ceramic	E	Electrolytic	PP	Polypropylene
CM	Cermet thick film			PS	Polystyrene
CP	Carbon preset	MF	Metal film	SM	Silver mica
CT	Ceramic trimmer	MO	Metal oxide	WWV	Wire-wound variable

All requests for repairs or replacement parts should be directed to the Tektronix Field Office or representative in your area. This procedure will assure you the fastest possible service.

ELECTRICAL

Circuit reference	Part Number	Description Value F	Type	Tol. %	Rating V
C1	281-0729-00	1.5 µ	CER	20	100
C2	281-0729-00	1.5 µ	CER	20	100
C3	285-0773-00	100 n	PE	20	400
C4	285-0779-00	470 n	PE	20	100
C5	281-0678-00	3 p	CER	0.1 p	500
C6	281-0678-00	3 p	CER	0.1 p	500
C7	290-0399-00	8 µ	E		25
C8	290-0499-00	15 µ	E		16
C9	285-0850-00	1 n	PS	5	125
C10	285-0920-00	56 p	PS	2	350
C11	285-0779-00	470 n	PE	20	100
C12	290-0497-00	100 µ	E		16
C13	285-0854-00	100 p	PS	2	350
C14	285-0779-00	470 n	PE	20	100
C51	281-0729-00	1.5 µ	CER	20	100
C52	281-0729-00	1.5 µ	CER	20	100
C53	285-0773-00	100 n	PE	20	400
C54	285-0779-00	470 n	PE	20	100
C55	281-0723-00	1.8 p	CER	0.1 p	500 } 877
C56	281-0723-00	1.8 p	CER	0.1 p	500 } 877
C57	285-0779-00	470 n	PE	20	100
C58	285-0915-00	100 n	PE	20	100
C59	285-0850-00	1 n	PS	5	125
C61	285-0920-00	56 p	PS	2	350
C62	285-0779-00	470 n	PE	20	100
C63	285-0915-00	100 n	PE	20	100
C64	285-0854-00	100 p	PS	2	350

Circuit reference	Part Number	Description Value F	Type	Tol. %	Rating V
C101	285-0850-00	1 n	PS	5	125
C102	285-0776-00	27 p	PS	1 p	350
C103	285-0854-00	100 p	PS	2	350
C104	285-0873-00	200 p	PS	5	350
C105	285-0874-00	470 p	PS	5	125
C106	285-0867-00	20 p	PS	1 p	350
C107	285-0870-00	120 p	PS	2	350
C109	285-0873-00	200 p	PS	5	350
C111	285-0854-00	100 p	PS	2	350
C112	285-0769-00	10 n	PE	20	400
C113	281-0137-00	6-30 p	CT		350
C114	281-0154-00	2-12 p	PP		500
C115	285-0843-00	30 p	PS	2 p	350
C116	285-0769-00	10 n	PE	20	400
(680) C117	285-0994-00	470 n	PE	20	100
C161	285-0854-00	100 p	PS	2 p	350
C162	285-0873-00	200 p	PS	5	350
C163	285-0867-00	20 p	PS	1 p	350
C164	285-0769-00	10 n	PE	20	400
C165	285-0843-00	30 p	PS	2 p	350
C166	283-0653-00	5 p	SM	10	350
C167	285-0867-00	20 p	PS	1 p	350
C168	281-0710-00	10 n	CER		250
* C210	285-0874-00	470 p	PS	5	125
* C211	285-0792-00	4.7 n	PE	20	125

* Two per instrument

Circuit reference	Part Number	Description Value F	Type	Tol. %	Rating V	
* C212	285-1032-00	47 n	PE	20	160	(726)
* C213	285-0791-00	470 n	PE	10	125	
* C214	285-0869-00	47 p	PS	2 p	350	
* C215	285-0762-00	450 p	PS	1	125	
* C216	285-0770-00	4.7 n	PS	1	125	
* C217	285-0926-00	47 n	PE	1	63	
* C218	285-0927-00	470 n	PE	1	63	
* C219	281-0732-00	3-12p	CT		350	
* C220	285-0928-00	4.7 µ	PE	1	63	
* C221	285-0884-00	29 p	PS	1 p	350	
* C222	285-0769-00	10 n	PE	20	400	
* C223	285-0866-00	10 p	PS	1 p	350	
C224	283-0653-00	5 p	SM		350	(857)
C251	285-0914-00	100 p	PS	10	2 k	
C252	285-0914-00	100 p	PS	10	2 k	
C253	285-0867-00	20 p	PS	1 p	350	
C254	285-0867-00	20 p	PS	1 p	350	
C255	285-0850-00	1 n	PS	5	125	
C256	285-0867-00	20 p	PS	1 p	350	
C257	281-0677-00	10 n	CER		1.5 k	
C258	281-0705-00	1 p	CER	0.1 p	500	
C259	290-0492-00	4.7 µ	E		16	
C260	285-0873-00	200 p	PS	5	350	
C277	285-0850-00	1 n	PS	5	125	
C278	285-0873-00	200 p	PS	5	350	
C279	285-0795-00	220 n	PE	20	250	
C280	281-0710-00	10 n	CER		250	

* Two per instrument

D

Circuit reference	Part Number	Description Value F	Type	Tol. %	Rating V
C301	285-0812-00	220 n	PE	10	400
C302	285-0772-00	100 n	PE	10	400
C303	285-0796-00	100 n	PE	20	250
C304	281-0682-00	20 n	CER		2 k
C305	285-0796-00	100 n	PE	20	250
C401	290-0500-00	470 µ	E		100
(856) C402	285-0995-00	25 n	PE		5 k
(856) C403	285-0995-00	25 n	PE		5 k
C404	290-0500-00	470 µ	E		100
C405	290-0489-00	15 µ	E		350
C406	290-0489-00	15 µ	E		350
C407	290-0489-00	15 µ	E		350
C408	290-0489-00	15 µ	E		350
(726) C409	285-1032-00	47 n	PE	20	160
(856) C410	285-0995-00	25 n	PE		5 k
(856) C411	285-0995-00	25 n	PE		5 k
C412	290-0498-00	1 m	E		25
C413	290-0498-00	1 m	E		25
C414	285-0874-00	470 p	PS	5	125
C415	285-0790-00	10 n	PE	20	125
C416	290-0498-00	1 m	E		25
C417	281-0677-00	10 n	CER		2 k
C418	290-0495-00	47 µ	E		40
C419	285-0795-00	220 n	PE	20	250
C421	285-0796-00	100 n	PE	20	250
C422	290-0496-00	33 µ	E		160
C423	285-0796-00	100 n	PE	20	250
C424	290-0492-00	4.7 µ	E		16
C425	290-0495-00	47 µ	E		40
C426	290-0492-00	4.7 µ	E		16
C427	290-0490-00	100 µ	E		25
C428	290-0489-00	15 µ	E		350
C429	290-0489-00	15 µ	E		350
C430	281-0682-00	20 n	CER		2 k
C431	290-0491-00	100 µ	E		63
C432	285-0915-00	100 n	PE	20	100

Circuit reference	Part Number	Description Value F	Type	Tol. %	Rating V	
C433	285-0923-00	220 n	PE	10	160	
C434	285-0795-00	220 n	PE	20	250	
C621	281-0157-00	5.5 - 65.5 p	PP		500	
C622	285-0845-00	68 p	PS	2 p	350	
C623	281-0157-00	5.5 - 65.5 p	PP		500	
C624	285-0845-00	68 p	PS	2 p	350	
C625	285-0800-00	10 n	PE	20	250	
C626	281-0710-00	10 n	CER		250	
C627	281-0710-00	10 n	CER		250	
C628	285-0779-00	470 n	PE	20	100	
C629	285-0779-00	470 n	PE	20	100	
C630	281-0156-00	1.4 - 6.4 p	PP		500	
C631	281-0156-00	1.4 - 6.4 p	PP		500	
C632	281-0723-00	1.8 p	CER	0.1 p	500	
C633	281-0723-00	1.8 p	CER	0.1 p	500	
C634	281-0723-00	1.8 p	CER	0.1 p	500	
C635	281-0723-00	1.8 p	CER	0.1 p	500	
C636	285-0854-00	100 p	PS	2 p	350	
C637	285-0854-00	100 p	PS	2 p	350	
C638	285-0800-00	10 n	PE	20	250	
C639	281-0156-00	1.4-6.4 p	PP		500	
C641	281-0156-00	1.4-6.4 p	PP		500	
C642	281-0156-00	1.4-6.4 p	PP		500	
C643	281-0156-00	1.4-6.4 p	PP		500	
C644	285-0874-00	470 p	PS	5	125	
C645	285-0874-00	470 p	PS	5	125	
C646	281-0157-00	5.5-65.5 p	PP		500	
C647	281-0157-00	5.5-65.5 p	PP		500	
C648	290-0494-00	47 µ	E		25	
C649	281-0155-00	2-22 p	PP		500	
C650	285-0842-00	15 p	PS	1p	350	(632)
C651	281-0155-00	2-22 p	PP		500	
C652	281-0713-00	10 p	CER	0.25 p	750	
C653	281-0676-00	2.2 p	CER	0.1 p	500	
C654	281-0678-00	3 p	CER	0.1 p	500	
C655	285-0800-00	10 n	PE	20	250	

	Circuit reference	Part Number	Description Value F	Type	Tol. %	Rating V
	C656	290-0493-00	22 µ	E		16
	C657	285-0800-00	10 n	PE	20	250
	C658	281-0710-00	10 n	CER		250
	C659	281-0710-00	10 n	CER		250
(632)	C660	285-0842-00	15 p	PS	1p	350
	C661	281-0713-00	10 p	CER	0.25 p	750
	C662	281-0713-00	10 p	CER	0.25 p	750
	C663	281-0710-00	10 p	CER		250
(811)	C665	281-0734-00	100 n	CER		30
	* C901	285-0772-00	100 n	PE	10	400
	* C902	281-0155-00	2-22 p	PP		500
	* C903	281-0155-00	2-22 p	PP		500
	* C904	281-0155-00	2-22 p	PP		500
	* C905	281-0156-00	1.4-6.4 p	PP		500
	* C906	281-0156-00	1.4-6.4 p	PP		500
	* C907	281-0154-00	2-12 p	PP		500
(763)	* C908	283-0607-00	2 n	BM	10	500
	* C909	283-0719-00	470 p	BM		
	* C911	285-0844-00	39 p	PS	2 p	350
	* C912	281-0154-00	2-12 p	PP		500
	* C913	281-0156-00	1.4-6.4 p	PP		500
	* C914	281-0155-00	2-22 p	PP		500
	* C915	283-0662-00	7.5 p	SM	0.5 p	350
	* C916	281-0154-00	2-12 p	PP		500
	* C917	285-0842-00	15 p	PS	1 p	350
	D1	152-0370-00		AAY30 Ge		
(697)	D2	152-0370-00		AAY30 Ge		
(697)	D3	152-0062-01		1N914 Si		
	D51	152-0370-00		AAY30 Ge		
(697)	D52	152-0370-00		AAY30 Ge		
(697)	D53	152-0062-01		1N914 Si		

* Two per instrument

Circuit reference	Part Number	Description		Tol. %	Rating W	
D101	152-0062-01	1N914	Si			(738)
D102	152-0062-01	1N914	Si			
D103	152-0062-01	1N914	Si			
D104	152-0062-01	1N914	Si			
D105	152-0343-00	1N914T	Si			
D106	152-0370-00	AAY30	Ge			
D107	152-0062-01	1N914	Si			
D108	152-0062-01	1N914	Si			
D109	152-0346-00	11V	Zener Si	5	330 m	
D161	152-0062-01	1N914	Si			
D162	152-0062-01	1N914	Si			
D163	152-0343-00	1N914T	Si			
D164	152-0370-00	AAY30	Ge			
D165	152-0343-00	1N914T	Si			
D166	152-0343-00	1N914T	Si			
D167	152-0062-01	1N914	Si			
D251	152-0370-00	AAY30	Ge			
D252	152-0062-01	1N914	Si			
D253	152-0062-01	1N914	Si			
D254	152-0062-01	1N914	Si			
D255	152-0062-01	1N914	Si			

Circuit reference	Part Number	Description Value V	Type	Tol. %	Rating
D281	152-0062-01		1N914 Si		
D282	152-0062-01		1N914 Si		
D301	152-0344-00	100	Zener Si	10	330 mW
D401	152-0515-00	6 k	Rectifier Si		
D402	152-0515-00	6 k	Rectifier Si		
D403	152-0344-00	100	Zener Si	10	330 mW
D404	152-0344-00	100	Zener Si	10	330 mW
D405	152-0344-00	100	Zener Si	10	330 mW
D406	152-0515-00	6 k	Rectifier Si		
D407	152-0515-00	6 k	Rectifier Si		
D408	152-0341-00	450	Rectifier Si		500 mA
D409	152-0341-00	450	Rectifier Si		500 mA
D410	152-0515-00	6 k	Rectifier Si		
D411	152-0515-00	6 k	Rectifier Si		
D412	152-0062-01		1N914 Si		
(686) D413	152-0341-00	450	Rectifier Si		500 mA
D414	152-0339-00	50	Rectifier Si		500 mA
D415	152-0339-00	50	Rectifier Si		500 mA
D416	152-0062-01		1N914 Si		
D417	152-0062-01		1N914 Si		
D418	152-0339-00	50	Rectifier Si		500 mA
D419	152-0062-01		1N914 Si		
D421	152-0487-00	47	Zener Si		20 W
D422	152-0339-00	50	Rectifier Si		500 mA
D423	152-0348-00	6.2	Zener Si	5	330 mW
D424	152-0062-01		1N914 Si		

Circuit reference	Part Number	Description Value V	Type	Tol. %	Rating	
D425	152-0062-01		1N914 Si			
D426	152-0339-00	50	Rectifier Si		500 mA	
D427	152-0341-00	450	Rectifier Si		500 mA	
D428	152-0062-01		1N914 Si			
D429	152-0344-00	100	Zener Si	10	330 mW	
D431	152-0354-00	12	Zener Si	5	330 mW	
D432	152-0484-00	39	Zener Si	5	700 mW	
D621	152-0370-00		AAY30 Ge			(697)
D622	152-0370-00		AAY30 Ge			(697)
D623	152-0554-00		BAY74 Si			(863)
D624	152-0554-00		BAY74 Si			
D625	152-0554-00		BAY74 Si			
D626	152-0554-00		BAY74 Si			
D627	152-0062-01		1N914 Si			
D628	152-0062-01		1N914 Si			
D629	152-0062-01		1N914 Si			
DL621	119-0155-00	200 ns	Delay line assembly			
FB251	276-0597-00	Core, ferroxcube bead, 2 x 4 x 5 mm				

Circuit reference	Part Number	Value	Description Type	Tol. %	Rating W
FS401	159-0077-00	250 mA	1.25 in delay 200-250 V		
	159-0079-00	500 mA	1.25 in delay 100-125 V		
ILP401	150-0095-00	14 V	LES		750 m
ILP402	150-0110-00	12 V	Capless		960 m
ILP403	150-0110-00	12 V	Capless		960 m
L275	119-0283-00		Solenoid relay GEC IS		12 V
L401	108-0504-00	100 Ω	Trace rotation coil 945 turns		
L621	114-0301-00	4.7 μH	Variable inductor		
L622	114-0301-00	4.7 μH	Variable inductor		
L623	108-0482-00	160 μH	Fixed inductor		
L624	108-0482-00	160 μH	Fixed inductor		

Circuit reference	Part Number	Value ohms	Description Type	Tol. %	Rating W
R1	317-0180-01	18	C		
R3	317-0104-01	100 k	C		
R4	317-0104-01	100 k	C		
R5	317-0271-01	270	C		
R6	317-0362-01	3.6 k	C		

Circuit reference	Part Number	Description Value ohms	Type	Tol. %	Rating W
R7	317-0102-01	1 k	C		
R8	317-0182-01	1.8 k	C		
R9	317-0222-01	2.2 k	C	5	125 m
R11	317-0332-01	3.3 k	C		
R12	311-0719-00	470	CP	20	250 m
R13	317-0821-01	820	C		
R14	317-0222-01	2.2 k	C	5	125 m
R15	317-0821-01	820	C		
R16	311-1050-00	2.2 k	CV	20	250 m
R17	317-0821-01	820	C		
R18	317-0222-01	2.2 k	C	5	125 m
R19	317-0332-01	3.3 k	C		
R21	317-0102-01	1 k	C		
R22	317-0182-01	1.8 k	C		
R23	317-0222-01	2.2 k	C	5	125 m
R24	317-0393-01	39 k	C		
R25	317-0223-01	22 k	C		
R26	317-0393-01	39 k	C		
R27	317-0122-01	1.2 k	C		
R28	317-0392-01	3.9 k	C		
R29	317-0223-01	22 k	C		
R31	317-0221-01	220	C		
R32	317-0222-01	2.2 k	C		
R33	311-0717-00	220	CP	20	250 m
R34	317-0332-01	3.3 k	C		
R35	317-0471-01	470	C		
R36	317-0222-01	2.2 k	C		
R37	316-0335-02	3.3 M	C	10	250 m
R38	317-0103-01	10 k	C		
R39	317-0224-01	220 k	C		
R40	317-0180-01	18	C		
R51	317-0180-01	18	C		
R53	317-0104-01	100 k	C		

Circuit reference	Part Number	Description			
		Value ohms	Type	Tol. %	Rating W
R54	317-0104-01	100 k	C		
R55	317-0271-01	270	C		
R56	317-0362-01	3.6 k	C		
R57	317-0152-01	1.5 k	C		
R58	317-0182-01	1.8 k	C		
R59	317-0562-01	5.6 k	C	5	125 m
R61	317-0332-01	3.3 k	C		
R62	311-0851-00	1 k	CP	20	250 m
R63	317-0821-01	820	C		
R64	317-0682-01	6.8 k	C	5	125 m
R65	317-0821-01	820	C		
R66	311-1053-00	10 k	CV	20	250 m
R67	317-0821-01	820	C		
R68	317-0682-01	6.8 k	C	5	125 m
R69	317-0332-01	3.3 k	C		
R71	317-0152-01	1.5 k	C		
R72	317-0182-01	1.8 k	C		
R73	317-0562-01	5.6 k	C	5	125 m
R76	317-0393-01	39 k	C		
R77	317-0122-01	1.2 k	C		
R78	317-0223-01	22 k	C		
R79	317-0221-01	220	C		
R81	317-0222-01	2.2 k	C		
R82	311-0717-00	220	CP	20	250 m
R83	317-0332-01	3.3 k	C		
R84	317-0471-01	470	C		
R85	317-0222-01	2.2 k	C		
R86	317-0103-01	10 k	C		
R87	317-0180-01	18	C		
R101	317-0393-01	39 k	C	5	125 m
R102	317-0103-01	10 k	C		
R103	317-0333-01	33 k	C	5	125 m

Circuit reference	Part Number	Description Value ohms	Type	Tol. %	Rating W	
R104	316-0225-01	2.2 M	C	10	250 m	
R105	317-0105-01	1 M	C			
R106	317-0224-01	220 k	C			
R107	317-0333-01	33 k	C			
R108	317-0222-01	2.2 k	C			
R109	311-0735-00	10 k	CP	20	250 m	
R111	317-0472-01	4.7 k	C			
R112	317-0223-01	22 k	C			
R113	311-0735-00	10 k	CP	20	250 m	
R114	317-0472-01	4.7 k	C			
R115	317-0183-01	18 k	C			
R116	317-0182-01	1.8 k	C			
R117	317-0331-01	330	C			
R118	303-0153-01	15 k	C	5	1	
R119	317-0152-01	1.5 k	C			
R121	317-0123-01	12 k	C			
R122	317-0392-01	3.9 k	C			
R123	317-0103-01	10 k	C			
R124	317-0223-01	22 k	C			
R125	311-0850-00	15 k	CP	20	250 m	
R126	317-0122-01	1.2 k	C			
R127	317-0472-01	4.7 k	C			
R128	317-0680-01	68	C			
R129	317-0102-01	1 k	C			
R131	317-0472-01	4.7 k	C			
R132	317-0101-01	100	C			
R133	315-0823-02	82 k	C			
R134	311-1048-00	50 k	CV	20	250 m	
R135	317-0100-01	10	C			
R136	317-0103-01	10 k	C			
R137	311-0719-00	470	CP	20	250 m	
R138	317-0272-01	2.7 k	C			
R139	311-1052-00	2 k	WWV		875 m	
R140	317-0471-01	470	C	5	125 m	
R141	321-0279-48	7.87 k	MF	1	125 m	(628)
R142	321-0850-48	27 k	MF	1	125 m	
R143	311-0735-00	10 k	CP	20	250 m	
R144	317-0221-01	220	C			
R145	317-0153-01	15 k	C			
R146	317-0221-01	220	C			
R147	317-0222-01	2.2 k	C			
R148	317-0222-01	2.2 k	C			
R149	317-0333-01	33 k	C			

	Circuit reference	Part Number	Description Value ohms	Type	Tol. %	Rating W
	R151	317-0562-01	5.6 k	C		
	R152	315-0331-02	330	C	5	250 m
	R153	317-0332-01	3.3 k	C		
	R154	321-0419-48	226 k	MF	1	125 m
	R156	316-0684-01	680 k	C	10	250 m
	R157	316-0105-01	1M	C	10	250 m
	R158	316-0125-01	1.2 M	C	10	250 m
	R159	317-0222-01	2.2 k	C		
	R161	317-0105-01	1 M	C		
	R162	317-0224-01	220 k	C		
	R163	317-0333-01	33 k	C		
	R164	317-0222-01	2.2 k	C		
	R165	311-0735-00	10 k	CP	20	250 m
	R166	317-0472-01	4.7 k	C		
	R167	317-0223-01	22 k	C		
	R168	311-0735-00	10 k	CP	20	250 m
	R169	317-0472-01	4.7 k	C		
(628)	•• R170	317-0101-01	100	C	5	125
	R171	317-0183-01	18 k	C		
	R172	317-0182-01	1.8 k	C		
	R173	317-0331-01	330	C		
	R174	303-0153-01	15 k	C		
	R175	317-0152-01	1.5 k	C		
	R176	317-0123-01	12 k	C		
	R177	317-0822-01	8.2 k	C		
	R178	317-0392-01	3.9 k	C		
	R179	311-0850-00	15 k	CP	20	250 m
	R181	317-0122-01	1.2 k	C		
	R182	317-0101-01	100	C		
	R183	315-0823-02	82 k	C	5	250 m
	R184	311-1048-00	50 k	CV	20	250 m
	R185	317-0100-01	10	C		
	R186	311-0735-00	10 k	CP	20	250 m
	R187	311-0719-00	470	CP	20	250 m
	R188	317-0272-01	2.7 k	C		
	R189	317-0153-01	15 k	C		
	R190	317-0471-01	470	C	5	125 m
	R191	316-0125-01	1.2 M	C	10	250 m
	R192	316-0684-01	680 k	C	10	250 m
	R193	317-0222-01	2.2 k	C		
	R194	317-0393-01	39 k	C		
	R195	317-0470-01	47	C		
	R196	316-0105-01	1 M	C	10	250 m

•• may be fitted

Circuit reference	Part Number	Description Value ohms	Type	Tol. %	Rating W
*R210	321-0469-48	750 k	MF	1	125 m
*R211	321-0440-48	374 k	MF	1	125 m
*R212	321-0419-48	226 k	MF	1	125 m
*R213	321-0373-48	75 k	MF	1	125 m
*R214	321-0344-48	37.4 k	MF	1	125 m
*R215	321-1325-48	24 k	MF	1	125 m
*R216	321-0277-48	7.5 k	MF	1	125 m
*R217	321-0844-48	2.2 k	MF	1	125 m
*R218	321-0193-48	1 k	MF	1	125 m
*R219	321-0852-48	36 k	MF	1	125 m
*R220	321-0344-48	37.4 k	MF	1	125 m
R249	317-0222-01	2.2 k	C	5	125 m
R250	317-0222-01	2.2 k	C	5	125 m
R251	303-0123-01	12 k	C	5	1
R252	303-0682-01	6.8 k	C	5	1
R253	317-0152-01	1.5 k	C		
R254	303-0123-01	12 k	C	5	1
R255	303-0822-01	8.2 k	C	5	1
R256	317-0123-01	12 k	C		
R257	317-0272-01	2.7 k	C		
R258	317-0242-01	2.4 k	C		
R259	317-0272-01	2.7 k	C		
R260	317-0100-01	10	C		
R261	317-0332-01	3.3 k	C		
R262	317-0332-01	3.3 k	C		
R263	317-0682-01	6.8 k	C		
R264	317-0123-01	12 k	C		
R265	317-0681-01	680	C		

*Two per instrument

	Circuit reference	Part Number	Value ohms	Description Type	Tol. %	Rating W
	R266	317-0272-01	2.7 k	C		
	R267	317-0242-01	2.4 k	C		
	R268	317-0272-01	2.7 k	C		
	R269	317-0332-01	3.3 k	C		
	R270	317-0100-01	10	C		
	R271	317-0332-01	3.3 k	C		
	R272	317-0392-01	3.9 k	C		
	R273	317-0222-01	2.2 k	C		
	R274	317-0393-01	39 k	C		
	R275	303-0202-01	2 k	C	5	1
	R276	315-0912-03	9.1 k	C	5	250 m
	R277	317-0152-01	1.5 k	C		
	R278	317-0332-01	3.3 k	C		
	R279	317-0152-01	1.5 k	C		
	R280	316-0103-01	10 k	C	10	250 m
	R281	317-0392-01	3.9 k	C		
	R282	317-0223-01	22 k	C		
	R283	311-1082-00	5 k	CV	20	250 m
	R284	317-0333-01	33 k	C	5	125 m
	R285	311-0798-00	2.2 k	CP	20	250 m
	R286	311-1047-01	5 k	CV	20	250 m
	R287	317-0562-01	5.6 k	C		
	R288	317-0123-01	12 k	C		
	R289	317-0122-01	1.2 k	C		
(632)	R290	317-0391-01	390	C	5	125 m
	R291	317-0472-01	4.7 k	C		
	R292	311-0719-00	470	CP	20	250 m
	R293	317-0911-01	910	C		
	R294	317-0751-01	750	C		
	R295	317-0121-01	120	C		
	R296	316-0331-01	330	C	10	250 m
	R297	311-0717-00	220	CP	20	250 m
	R298	307-0255-00	4.7 k	MO	5	3.25
	R299	307-0255-00	4.7 k	MO	5	3.25
(680)	R301	322-0452-48	499 k	MF	1	250 m
(680)	R302	322-0452-48	499 k	MF	1	250 m
	R303	311-1156-00	220 k	CV	20	250 m
(762)	R304	325-0129-00	750 k	MF	1	1
(724)	R305	311-1398-00	1 M	CV	20	2
	R306	316-0684-01	680 k	C	10	250 m
	R307	311-0907-00	100 k	CV	20	250 m
	R308	316-0102-01	1 k	C	10	250 m
	R309	311-0809-00	1 M	CP	20	250 m
	R310	322-0452-48	499 k	MF	1	250 m
	R311	317-0473-01	47 k	C		
	R312	317-0273-01	27 k	C		

Circuit reference	Part Number	Description Value ohms	Type	Tol. %	Rating W	
R313	317-0104-01	100 k	C			
R314	317-0104-01	100 k	C			
R315	316-0106-01	10 M	C	10	250 m	
R401	311-0856-00	100	CP	20	1	(680)
R402	317-0472-01	4.7 k	C	5	125 m	
R403	307-0256-00	27	MO	5	1.5	
R404	311-0765-00	100 k	CP	20	250 m	(665)
R405	317-0824-01	820 k	C			
R406	317-0222-01	2.2 k	C	5	125 m	
R407	316-0223-01	22 k	C	10	250 m	
R408	317-0392-01	3.9 k	C			
R409	317-0393-01	39 k	C	5	125 m	(628)
R410	316-0100-01	10	C	10	250 m	
R411	321-1392-48	120 k	MF	1	125 m	(665)
R412	317-0824-01	820 k	C			
R413	317-0105-01	1 M	C			
R414	311-0850-00	15 k	CP	20	250 m	(628)
R415	317-0103-01	10 k	C			
R416	303-0470-01	47	C	5	1	
R417	317-0184-01	180 k	C			
R418	317-0103-01	10 k	C			
R419	303-0223-01	22 k	C	5	1	
R420	317-0101-01	100	C			
R421	311-0913-00	1.5 k	CP	20	250 m	
R422	317-0222-01	2.2 k	C			
R423	317-0102-01	1 k	C			
R424	317-0680-01	68	C			
R425	311-1046-00	250	CP	20	1	
R426	317-0562-01	5.6 k	C			
R427	317-0102-01	1 k	C			
R428	317-0331-01	330	C			
R429	317-0471-01	470	C			
R430	307-0317-00	390	MO	5	5.25	
R431	311-0913-00	1.5 k	CP	20	250 m	
R432	317-0472-01	4.7 k	C			
R433	307-0284-00	540	MO	5	3.5	

	Circuit reference	Part Number	Description Value ohms	Type	Tol. %	Rating W
	R434	317-0102-01	1 k	C		
	R435	317-0392-01	3.9 k	C		
	R436	311-0798-00	2.2 k	CP	20	250 m
	R437	317-0562-01	5.6 k	C		
	R438	317-0102-01	1 k	C		
	R439	317-0102-01	1 k	C		
	R440	316-0474-01	470 k	C	10	250 m
	R441	317-0103-01	10 k	C		
(686)	R442	315-0680-01	68	C	5	250 m
	R443	316-0331-01	330	C	10	250 m
	R444	303-0681-01	680	C	5	1
	R445	316-0102-01	1 k	C	10	250 m
	R446	316-0102-01	1 k	C	10	250 m
	R447	316-0102-01	1 k	C	10	250 m
	R448	316-0102-01	1 k	C	10	250 m
	R449	316-0474-01	470 k	C	10	250 m
	R450	316-0102-01	1 k	C	10	250 m
	R451	316-0270-01	27	C	10	250 m
	R621	317-0272-01	2.7 k	C		
	R622	317-0105-01	1 M	C		
	R623 A B	310-0679-00	111 k 900 k	CM	1	250 m
	R624 A B	310-0679-00	111 k 900 k	CM	1	250 m
	R625	317-0105-01	1 M	C		
	R626	317-0105-01	1 M	C		
	R627	311-1028-00	100 k	CV	20	250 m
	R628	317-0272-01	2.7 k	C		
	R629	317-0223-01	22 k	C		
	R630	311-0765-00	100 k	CP	20	250 m
	R631	311-1112-00	100 k	CV	20	250 m
	R632	317-0105-01	1 M	C		
	R633	317-0154-01	150 k	C		
697)	R634	317-0105-01	1M	C	5	125 m
	R635	311-0765-00	100 k	CP	20	250 m
	R636	311-0765-00	100 k	CP	20	250 m
397)	R637	317-0105-01	1M	C	5	125 m
	R638	317-0154-01	150 k	C		
	R639	317-0561-01	560	C		

Circuit reference	Part Number	Description Value ohms	Type	Tol. %	Rating W	
R641	317-0561-01	560	C			
R642	303-0183-01	18 k	C	5	1	
R643	317-0751-01	750	C	5	125 m	(697)
R644	311-0712-00	100	CP	20	250 m	(697)
R645	317-0751-01	750	C	5	125 m	(697)
R646	317-0751-01	750	C	5	125 m	(697)
R647	311-0712-00	100	CP	20	250 m	
R648	317-0751-01	750	C	5	125 m	(696)
R651	311-1409-00	500	CV	−0 +40	125 m	(763)
R652	321-0863-48	680	MF	1	125 m	(696)
R653	311-1409-00	500	CV	−0 +40	125 m	(763)
R654	317-0333-01	33 k	C			
R655	317-0561-01	560	C			
R656	317-0101-01	100	C			
R657	317-0561-01	560	C			
R658	317-0561-01	560	C			
R659	303-0183-01	18 k	C	5	1	
R661	317-0561-01	560	C			
R662	317-0271-01	270	C	5	125 m	
R663	317-0271-01	270	C	5	125 m	
R664	317-0391-01	390	C			
R665	317-0391-01	390	C			
R666	317-0561-01	560	C	5	125 m	
R667	317-0561-01	560	C	5	125 m	
R668	317-0561-01	560	C	5	125 m	
R669	317-0561-01	560	C	5	125 m	
R671	311-0719-00	470	CP	20	250 m	
R672	311-0719-00	470	CP	20	250 m	
R673	317-0681-01	680	C			
R674	317-0681-01	680	C			
R675	317-0681-01	680	C			
R676	317-0681-01	680	C			
R677	317-0820-01	82	C			
R678	317-0820-01	82	C			
R679	317-0472-01	4.7 k	C			
R681	317-0472-01	4.7 k	C			
R682	303-0123-01	12 k	C	5	1	
R683	317-0470-01	220	C	5	125 m	
R684	317-0472-01	4.7 k	C			
R685	317-0472-01	4.7 k	C			
R686	317-0271-01	270	C			
R687	317-0271-01	270	C			

	Circuit reference	Part Number	Description Value ohms	Type	Tol. %	Rating W
	R688	317-0271-01	270	C		
	R689	317-0271-01	270	C		
	R691	317-0562-01	5.6 k	C		
	R692	317-0562-01	5.6 k	C		
	R693	317-0472-01	4.7 k	C		
	R694	317-0472-01	4.7 k	C		
	R695	317-0221-01	220	C		
	R696	317-0221-01	220	C		
	R697	317-0221-01	220	C		
	R698	317-0221-01	220	C		
	R699	311-0717-00	220	CP	20	250 m
	R701	317-0102-01	1 k	C		
	R702	317-0102-01	1 k	C		
	R703	311-0717-00	220	CP	20	250 m
	R704	317-0471-01	470	C		
	R705	317-0471-01	470	C		
	R706	311-0735-00	10 k	CP	20	250 m
	R707	317-0471-01	470	C		
	R708	317-0471-01	470	C		
	R709	317-0103-01	10 k	C		
(696)	R711	321-0097-48	100	MF	1	125 m
(696)	R712	321-0097-48	100	MF	1	125 m
	R713	317-0223-01	22 k	C		
	R714	317-0152-01	1.5 k	C		
	R715	317-0471-01	470	C		
(696)	R716	321-0100-48	107	MF	1	125 m
(696)	R717	321-0100-48	107	MF	1	125 m
	R718	317-0561-01	560	C		
	R719	317-0561-01	560	C		
	R721	317-0470-01	47	C	5	125 m
	R722	307-0135-00	1	MO	5	1.5
(696)	R723	321-1353-48	47 k	MF	1	125 m
(696)	R724	321-0874-48	39 k	MF	1	125 m
	R725	317-0103-01	10 k	C		
	R726	307-0257-00	940	MO	5	1.5
	R727	317-0470-01	47	C		
	R728	317-0470-01	47	C		
	R729	307-0257-00	940	MO	5	15
	R731	317-0105-01	1 M	C		
	R732	303-0271-01	270	C	5	1
	R733	317-0182-01	1.8 k	C		
	R734	317-0182-01	1.8 k	C		

Circuit reference	Part Number	Description: Value ohms	Type	Tol. %	Rating W	
R735	317-0683-01	68 k	C			
R736	317-0333-01	33 k	C			
R737	317-0333-01	33 k	C			
R738	317-0683-01	68 k	C			
R739	303-0123-01	12 k	C	5	1	
R741	317-0471-01	470	C			
R742	317-0332-01	3.3 k	C			
R743	317-0471-01	470	C			
R744	317-0332-01	3.3 k	C			
R745	303-0123-01	12 k	C	5	1	
R746	317-0471-01	470	C			
R747	317-0332-01	3.3 k	C			
R748	317-0471-01	470	C			
R749	317-0332-01	3.3 k	C			
* R901	321-0481-42	1M	MF	0.5	125 m	)
* R902	325-0124-00	990 k	MF	0.5	125 m	)
* R903	325-0125-00	900 k	MF	0.5	125 m	)
* R904	317-0470-01	47	C	5	125 m	)
* R905	321-0193-42	1 k	MF	0.5	125 m	)
* R906	321-1289-42	10.1 k	MF	0.5	125 m	)
* R907	321-1389-42	111 k	MF	0.5	125 m	) (763)
* R908	317-0470-01	47	C	5	125 m	) (907)
* R911	317-0470-01	47	C	5	125 m	)
* R912 A)	310-0680-00	(500 k)	CM	5	125 m	)
B)		(800 k)				)
C)		(250 k)				)
D)		(1M)				)
RL275	148-0073-00	Relay Dry Reed				

* Two per instrument

C

Circuit reference	Part Number	Description
S1	260-1054-00	Push (5-button)
S2	311-1050-00	Rotary (with R16)
S51	260-1055-00	Push (3-button)
S52	311-1053-00	Rotary (with R66)
S101	260-1145-00	Push (2-button)
S102	311-1048-00	Pull (with R134)
S161	311-1048-00	Pull (with R184)
(806) * S210	260-1231-01	Rotary (23-position)
S275	260-1146-00	Push (2-button)
S276	311-1047-01	Pull (with R286)
(724) S401	311-1398-00	Rotary (with R305)

* Two per instrument

Circuit reference	Part Number	Description	
S621	260-1106-00	Push (1-button)	
S622	260-1106-00	Push (1-button)	
S623	260-1204-00	Push (2-button)	
S624	260-1089-00	Push (2-button)	
S625	260-1183-00	Push (1-button)	
* S901	260-1136-01	Slide (3-position)	
* S902	260-1446-00	Rotary (12-position)	(763)
T401	120-0594-00	Power transformer	

Circuit reference	Part Number	Description Value ohms	Type	Tol. %	Rating W	
TH101	307-0258-00	130	Thermistor	20	500 m	
TH161	307-0258-00	130	Thermistor	20	500 m	
TH621	307-0258-00	130	Thermistor	20	500 m	
TH622	307-0258-00	130	Thermistor	20	500 m	
TR1	151-0320-01	MPS6518	Motorola	Si	PNP	(776)
TR2	151-0320-01	MPS6518	Motorola	Si	PNP	(776)
TR3	151-0320-01	MPS6518	Motorola	Si	PNP	(776)
TR4	151-0320-01	MPS6518	Motorola	Si	PNP	(776)
TR5	151-0320-01	MPS6518	Motorola	Si	PNP	(776)

* Two per instrument

	Circuit reference	Part Number	Description			
(776)	TR51	151-0320-01	MPS6518	Motorola	Si	PNP
(776)	TR52	151-0320-01	MPS6518	Motorola	Si	PNP
(776)	TR53	151-0320-01	MPS6518	Motorola	Si	PNP
(776)	TR54	151-0320-01	MPS6518	Motorola	Si	PNP
(776)	TR55	151-0320-01	MPS6518	Motorola	Si	PNP
	TR101	151-0257-00	2N1990U	C.S.F.	Si	NPN
	TR102	151-0320-00	MPS6518	Motorola	Si	PNP
	TR103	151-0320-00	MPS6518	Motorola	Si	PNP
(776)	TR104	151-0320-01	MPS6518	Motorola	Si	PNP
(776)	TR105	151-0320-01	MPS6518	Motorola	Si	PNP
	TR106	151-0127-02	BSX20/2N2369	Mullard	Si	NPN
	TR107	151-0320-00	MPS6518	Motorola	Si	PNP
	TR108	151-0127-02	BSX20/2N2369	Mullard	Si	NPN
	TR109	151-0242-00	2N3904	Motorola	Si	NPN
	TR110	151-1052-00	BFW1052	Mullard	Si	N-channel
	TR111	151-0127-02	BSX20/2N2369	Mullard	Si	NPN
	TR112	151-0127-02	BSX20/2N2369	Mullard	Si	NPN
	TR113	151-0127-02	BSX20/2N2369	Mullard	Si	NPN
	TR161	151-0320-00	MPS6518	Motorola	Si	PNP
	TR162	151-0320-00	MPS6518	Motorola	Si	PNP
	TR163	151-0320-00	MPS6518	Motorola	Si	PNP
	TR164	151-0320-00	MPS6518	Motorola	Si	PNP
	TR165	151-0242-00	2N3904	Motorola	Si	NPN
	TR166	151-1052-00	BFW1052	Mullard	Si	N-channel
	TR167	151-0127-02	BSX20/2N2369	Mullard	Si	NPN

Circuit reference	Part Number	Description				
TR251	151-0242-00	2N3904	Motorola	Si	NPN	
TR252	151-0242-00	2N3904	Motorola	Si	NPN	
TR253	151-0320-00	MPS6518	Motorola	Si	PNP	
TR254	151-0320-00	MPS6518	Motorola	Si	PNP	
TR255	151-0320-00	MPS6518	Motorola	Si	PNP	
TR256	151-0320-00	MPS6518	Motorola	Si	PNP	
TR257	151-0242-00	2N3904	Motorola	Si	NPN	
TR258	151-0320-00	MPS6518	Motorola	Si	PNP	
TR259	151-0127-02	BSX20/2N2369	Mullard	Si	NPN	
TR261	151-0320-01	MPS6518	Motorola	Si	PNP	
TR262	151-0320-01	MPS6518	Motorola	Si	PNP	(738)
TR276	151-0317-00	TO-18/BC109C	Commercial spec.	Si	NPN	
TR277	151-0257-01	BF305		Si	NPN	(864)
TR278	151-0257-01	BF305		Si	NPN	(864)
TR401	151-0343-00	BF259	Cosem	Si	NPN	
TR402	151-0332-00	2N4899	Motorola	Si	PNP	
TR403	151-0257-01	BF305	C.S.F.	Si	NPN	(877)
TR404	151-0244-00	2N3702	Texas	Si	PNP	(686)
TR405	151-0242-00	2N3904	Motorola	Si	NPN	
TR406	151-0310-00	E1530	Texas	Si	NPN	
TR407	151-0343-00	BF259	Cosem	Si	NPN	
TR408	151-0320-00	MPS6518	Motorola	Si	PNP	
TR409	151-0320-00	MPS6518	Motorola	Si	PNP	
TR411	151-0320-00	MPS6518	Motorola	Si	PNP	
TR412	151-0127-02	BSX20/2N2369	Mullard	Si	NPN	
TR413	151-0127-02	BSX20/2N2369	Mullard	Si	NPN	

Circuit reference	Part Number	Description			
TR621	151-0127-02	BSX20/2N2369	Mullard	Si	NPN
TR622	151-0127-02	BSX20/2N2369	Mullard	Si	NPN
TR623	151-1036-00				
TR624	151-1036-00	DUAL FET		Si	N-channel
TR625	151-1036-00	DUAL FET		Si	N-channel
TR626	151-1036-00				
TR627	151-0127-02	BSX20/2N2369	Mullard	Si	NPN
TR628	151-0127-02	BSX20/2N2369	Mullard	Si	NPN
TR629	151-0127-02	BSX20/2N2369	Mullard	Si	NPN
TR631	151-0127-02	BSX20/2N2369	Mullard	Si	NPN
TR632	151-0127-02	BSX20/2N2369	Mullard	Si	NPN
TR633	151-0127-02	BSX20/2N2369	Mullard	Si	NPN
TR634	151-0127-02	BSX20/2N2369	Mullard	Si	NPN
TR635	151-0127-02	BSX20/2N2369	Mullard	Si	NPN
TR636	151-0127-02	BSX20/2N2369	Mullard	Si	NPN
TR637	151-0127-02	BSX20/2N2369	Mullard	Si	NPN
TR638	151-0127-02	BSX20/2N2369	Mullard	Si	NPN
TR639	151-0127-02	BSX20/2N2369	Mullard	Si	NPN
TR641	151-0127-02	BSX20/2N2369	Mullard	Si	NPN
TR642	151-0127-02	BSX20/2N2369	Mullard	Si	NPN
TR643	151-0127-02	BSX20/2N2369	Mullard	Si	NPN
TR644	151-0127-02	BSX20/2N2369	Mullard	Si	NPN
TR645	151-0127-02	BSX20/2N2369	Mullard	Si	NPN
TR646	151-0127-02	BSX20/2N2369	Mullard	Si	NPN
TR647	151-0310-00	E1530	Texas	Si	NPN
TR648	151-0310-00	E1530	Texas	Si	NPN
(776) TR649	151-0320-01	MPS6518	Motorola	Si	PNP
(776) TR650	151-0320-01	MPS6518	Motorola	Si	PNP
(776) TR651	151-0320-01	MPS6518	Motorola	Si	PNP
(776) TR652	151-0320-01	MPS6518	Motorola	Si	PNP

V101	150-0069-00		60 V Neon 3 L	Capless
V301	154-0626-00	P31	D14-160GH	
	*154-0626-01		95447GH (standard)	
	154-0654-00	P7	D14-160 GM)	
	*154-0654-01		95447 GM)	Alternatives
	154-0655-00	P11	D14-160 BE)	
	*154-0655-01		95447 BE)	

*Preferred

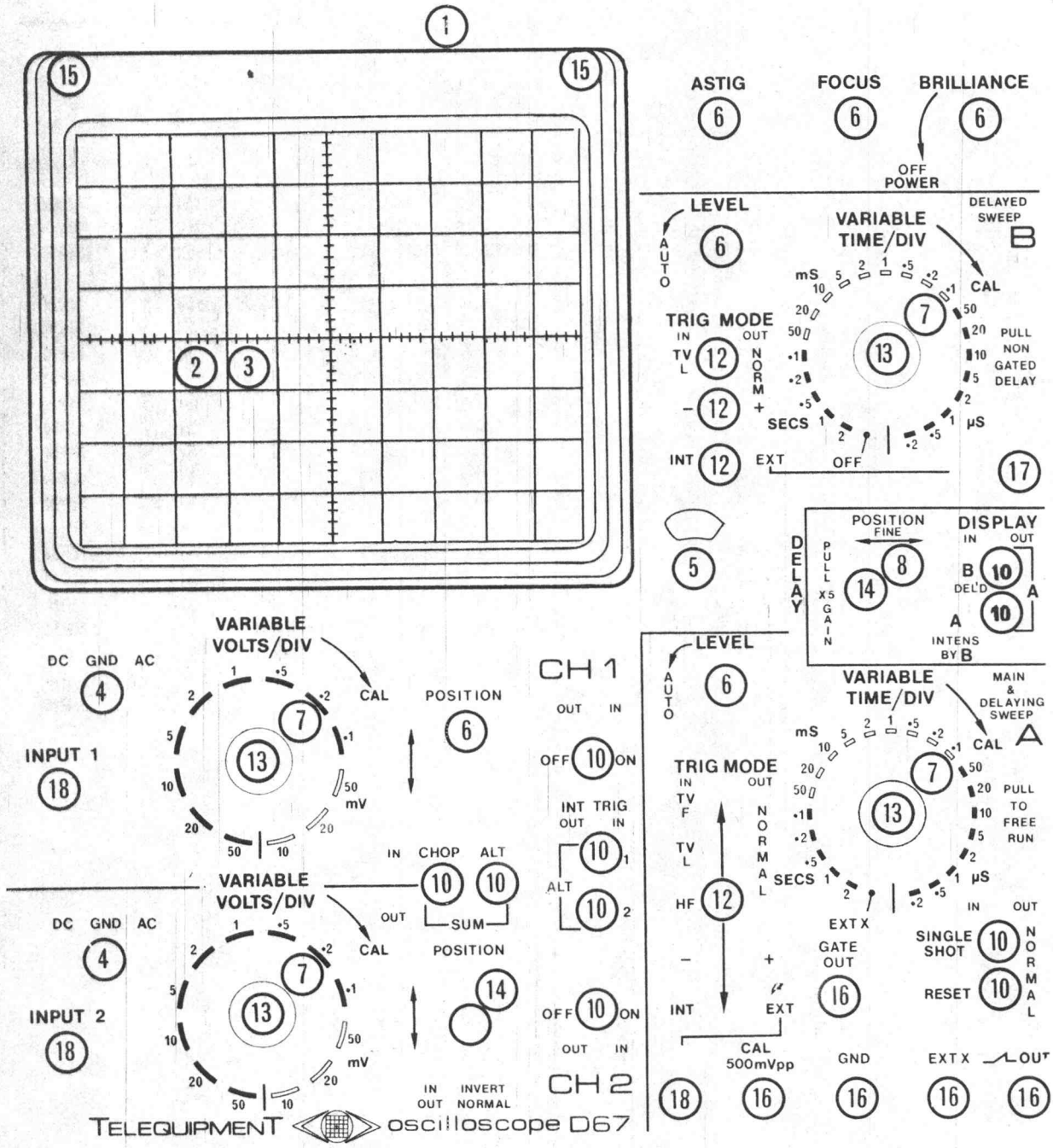
ASTIG
FOCUS
BRILLIANCE
OFF POWER
LEVEL
AUTO
VARIABLE TIME/DIV
DELAYED SWEEP B
CAL
TRIG MODE
IN OUT
TV L
NORM
SECS
μS
PULL NON GATED DELAY
INT
EXT
OFF
POSITION FINE
DISPLAY
IN OUT
B DEL'D A
A INTENS BY B
DELAY
PULL X5 GAIN
VARIABLE VOLTS/DIV
DC GND AC
INPUT 1
INPUT 2
POSITION
CH 1
CH 2
OUT IN
OFF ON
INT TRIG
ALT
IN CHOP ALT
SUM
IN INVERT
OUT NORMAL
MAIN & DELAYING SWEEP A
PULL TO FREE RUN
TV F
HF
EXT X
GATE OUT
SINGLE SHOT
RESET
CAL 500mVpp
GND
EXT X
OUT
TELEQUIPMENT
oscilloscope D67

Front Panel

MECHANICAL

	Part No.	Description	Location
	213-0238-00	Screw Nylon; 2BA x 19m lg.	EHT
	213-0248-00	Screw, set 3mm lg.	4-7, 9, 10
	213-0249-00	Screw, set 5mm lg.	8
	136-0295-00	Socket	Trace Rot.
	136-0381-00	Socket Assy 4mm	Rear Panel
	131-0645-00	Socket Side Pin connector	CRT
	131-0650-00	Socket, BNC	17
	131-0651-00	Socket, BNC	18
	361-0308-00	Spacer Brass	PC 88
	385-0201-00	Spacer, Hex, 19.8mm	PC 75
	385-0202-00	" " Thd 21.4mm	PC 75
	361-0283-00	Spacer Mounting	PC 76
(879)	361-0374-01	Spacer	T/Div Sw.
(700)	385-0206-02	Spacer	S/S
	385-0207-00	Spacer	FINE.
	385-0208-00	Spacer, Hex Thd. 49.2	T/Div.Sw.
	214-1092-00	Tag, Stocko 6326A	
	210-1075-00	Washer, foot packing	
	200-1187-00	Bezel, Lighthood	1
	344-0202-00	Clip	17
	131-0260-00	Connector Assy	
(744)	390-0250-00	Cover, Rear	
	390-0092-02	Cover Side	
	343-0212-00	Ends, Handle	
	348-0169-00	Feet, raising front	
	348-0168-00	Feet, Fixed rear	
	378-0605-02	Filter	2
	331-0289-00	Graticule	3
	348-0160-00	Grommet 9.5mm id	11,CRT
	348-0161-00	Grommet	Neon
	367-0101-02	Handle	
	260-1136-01	Knob, Grey	4
	366-1237-02	Knob, Grey	5
	366-1239-00	Knob, Grey	6
	366-1241-00	Knob, Grey	7
	366-1254-00	Knob, Grey	8
	366-1274-00	Knob, Grey	9
	366-1414-01	Knob, Push Button	10
	366-1414-07	Knob, Push Button	12
(879)	366-1481-00	Knob, Red	13
	366-1255-00	Knob, Red	14
	161-0084-00	Lead c/w Socket (U.K.)	Power
(730)	161-0084-01	Lead c/w Socket (U.S.A.)	Power
	220-0578-00	Nut Nylon 2BA	EHT
	220-0607-00	Nut (Special)	15
	131-1021-00	Pin PCB. Quick Release Amp.	

ASSEMBLY PART NUMBERS

Assembly	Part Number	Includes Circuit References	
Attenuator	262-0949-02	C901 to C917, R651, R653, R901 to R909, R911, R912, S902.	(763)
E.H.T. Unit	670-1979-00	C402, C403, C410, C411, D401, D402, D410, D411, R440, R449.	(855)
PC 75	670-1836-00	C1 – C14, C51 – C58, C61 – C64, C101 – C111, C114, C115, C117, C161 – C163, C165 – C168, C251 – C259, C277 – C280, C303, C305, C401, C404 – C409, C412 – C433, C59.	
		D1, D51, D101 – D109, D161 – D167, D251, D253 – D255, D281, D282, D301, D403 – D409, D412 – D432.	(738)
		R1 – R15, R17 – R40, R51 – R65, R67 – R87, R101 – R132, R135 – R138, R140 – R151, R153 – R155, R159, R161 – R182, R185 – R190, R193 – R195, R251 – R281, R284, R285, R287 – R302, R306, R309, R311, R312, R402 – R423, R426, R427, R431, R432, R434 – R449, R430.	
		S1, S51.	
		TR1 – TR5, TR51 – TR55, TR101 – TR113, TR161 – TR167, TR251 – TR262, TR276 – TR278, TR401 – TR413.	
		TH101, TH161.	
PC 76	670-1835-00	C434, C621 – C635, C638 – C659, (C640 deleted), C663.	(738)
		D621 – D629.	
		DL621.	
		L621 to L624.	
		R313, R314, R424, R428, R429, R433.	
		R621 – R626, R628 – R630, R632 – R648, R652, R654 – R731, R733, R734.	
		S625.	
		TH621 – TH622.	
		TR621 – TR648.	
Reed Relay	644-0028-00	L275, RL275.	
Timebase	262-0950-00	C210 – C222, R210 – R220, S210.	
'Y' Amp cableform	644-0029-00	C636, C637, C661, C662, R627, R631, R732, R735 to R749, S621 to S624, TR649 to TR652.	

CHAPTER 6

Circuit Diagrams

To minimize the risk of misinterpretation of component values on circuit diagrams, the decimal point has been replaced by the multiplier or sub-multiplier of the basic unit. For instance, 2.2 megohms is shown as 2M2 and 1.8 picofarads is shown as 1p8.

To aid the reader further, in addition to the block Circuit Reference Table in Chapter 5.1, to locate a component in the circuit diagrams, a table is provided at the top of each circuit diagram, in which the circuit reference will appear, where practicable, directly above the component being sought.

PRINTED CIRCUITS

Blue shows the rear track as seen through the board. Red, the component side track and those components which are referred to in Chapter 4.

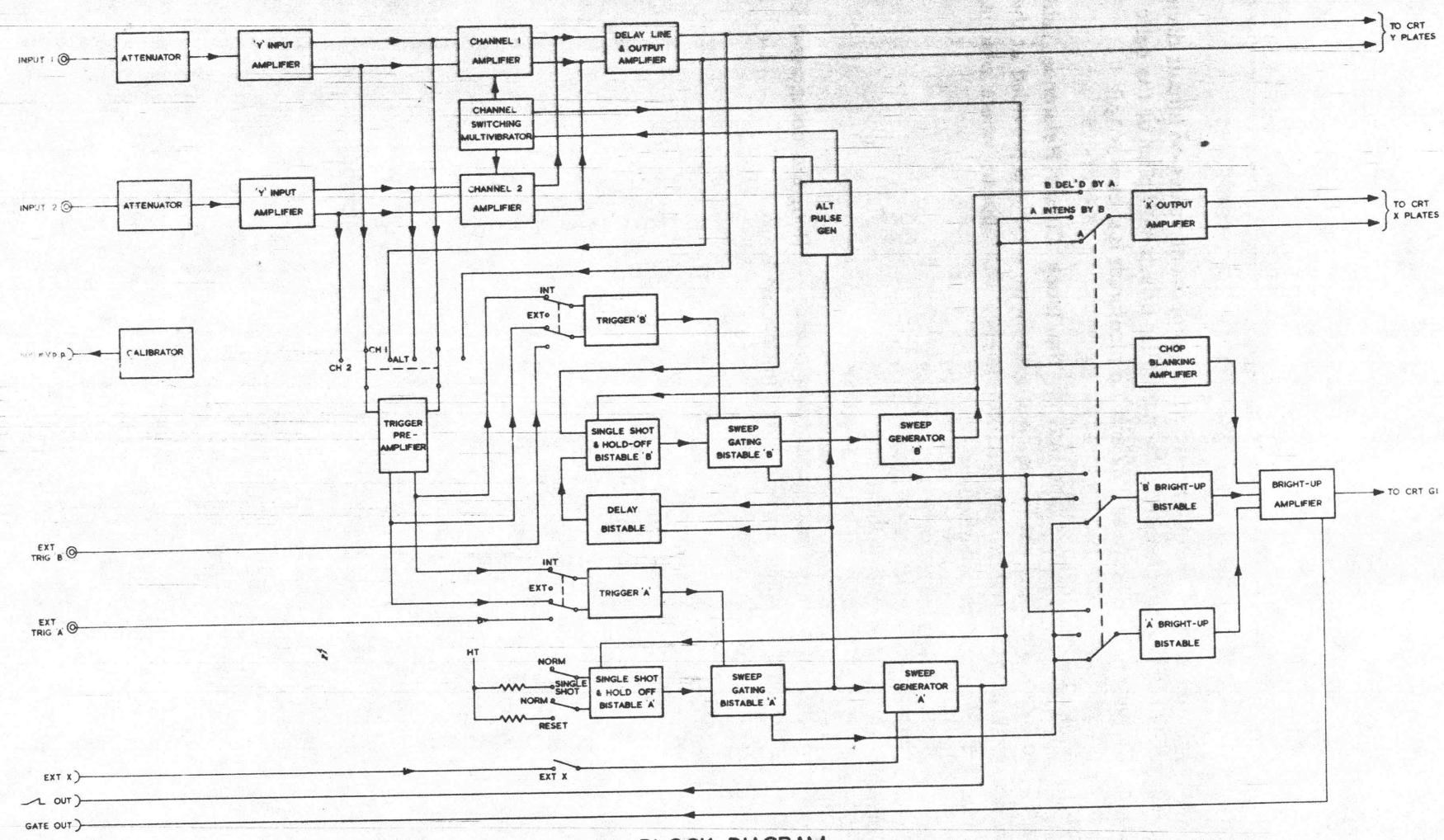

BLOCK DIAGRAM
FIG. I

RESISTORS	901, 904, 902, 903, 905, 906, 907, 908, 912A, 912B, 911, 912C, 912D
CAPACITORS	902, 903, 904, 901, 905, 906, 907, 908, 909, 911, 912, 913, 914, 915, 916, 917
MISC.	S901, S902

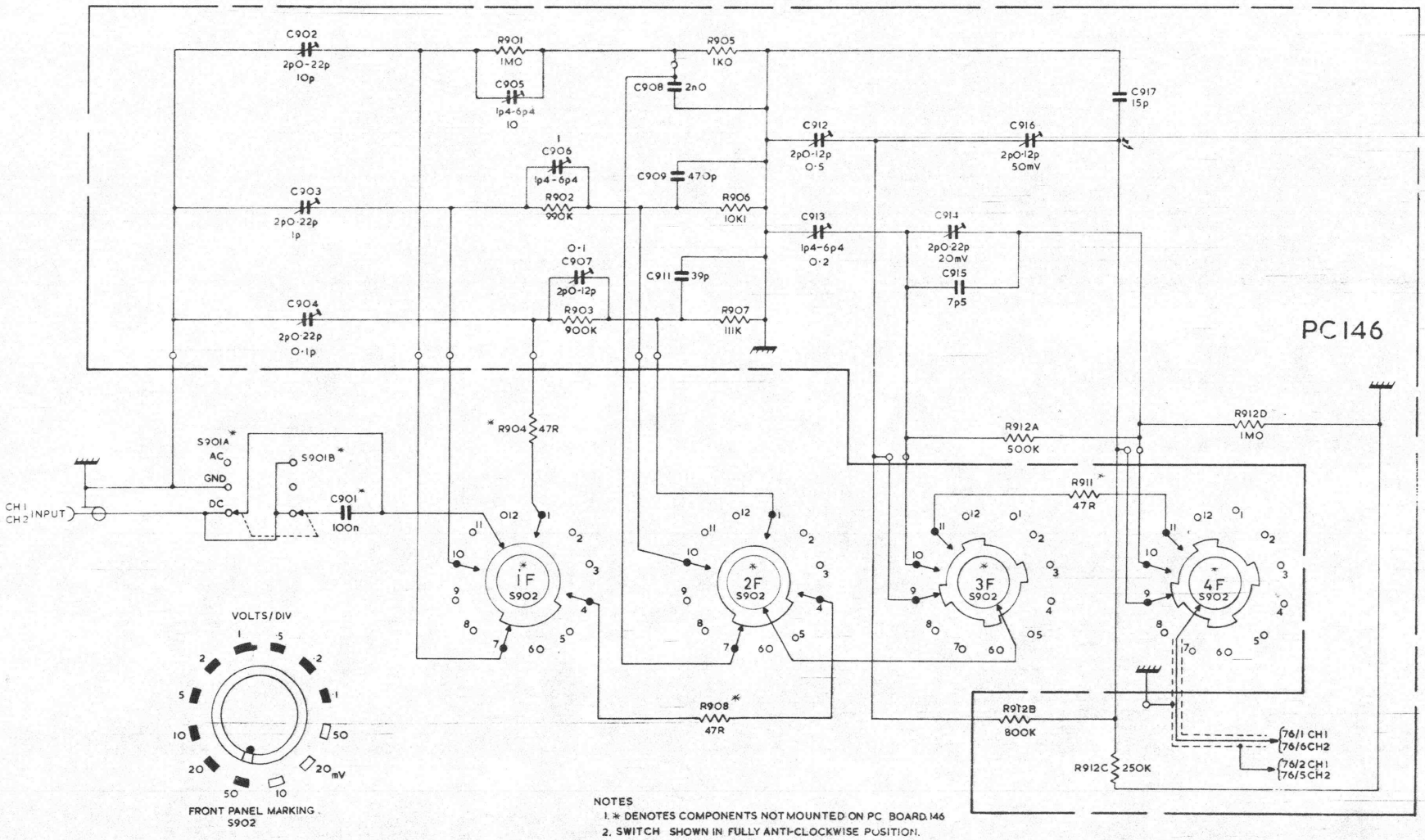

NOTES
1. * DENOTES COMPONENTS NOT MOUNTED ON PC BOARD 146
2. SWITCH SHOWN IN FULLY ANTI-CLOCKWISE POSITION.

ATTENUATOR FIG. 2.

MISC.	L624 L623 · D621 · D622 · TR621 TR622 · TR623 TR624 TR625 TR626 · TR627 TH621 TH622 · TR628 TR629 TR631 TR632 · TR633 TR634 TR635 TR636 · TR637 TR638
CAPACITORS	656 · 625 · 621 623 626 622 624 627 · 663 628 629 · 630 631 · 638 632 634 633 635 · 636 637 658 659
RESISTORS	629 621 · 626 627 631 · 628 630 · 622 623A 624A 632 · 623B 634 635 636 637 624B · 633 638 · 639 641 · 654 · 643 644 645 646 647 648 · 651 652 653 · 683 721 677 678 · 656 · 655 657 658 661 733 734 · 664 665 · 662 663 · 666 667 668 669 · 671 672 · 673 674 675 676 · 684 688 685 689 679 681 · 686 687 · 691 692

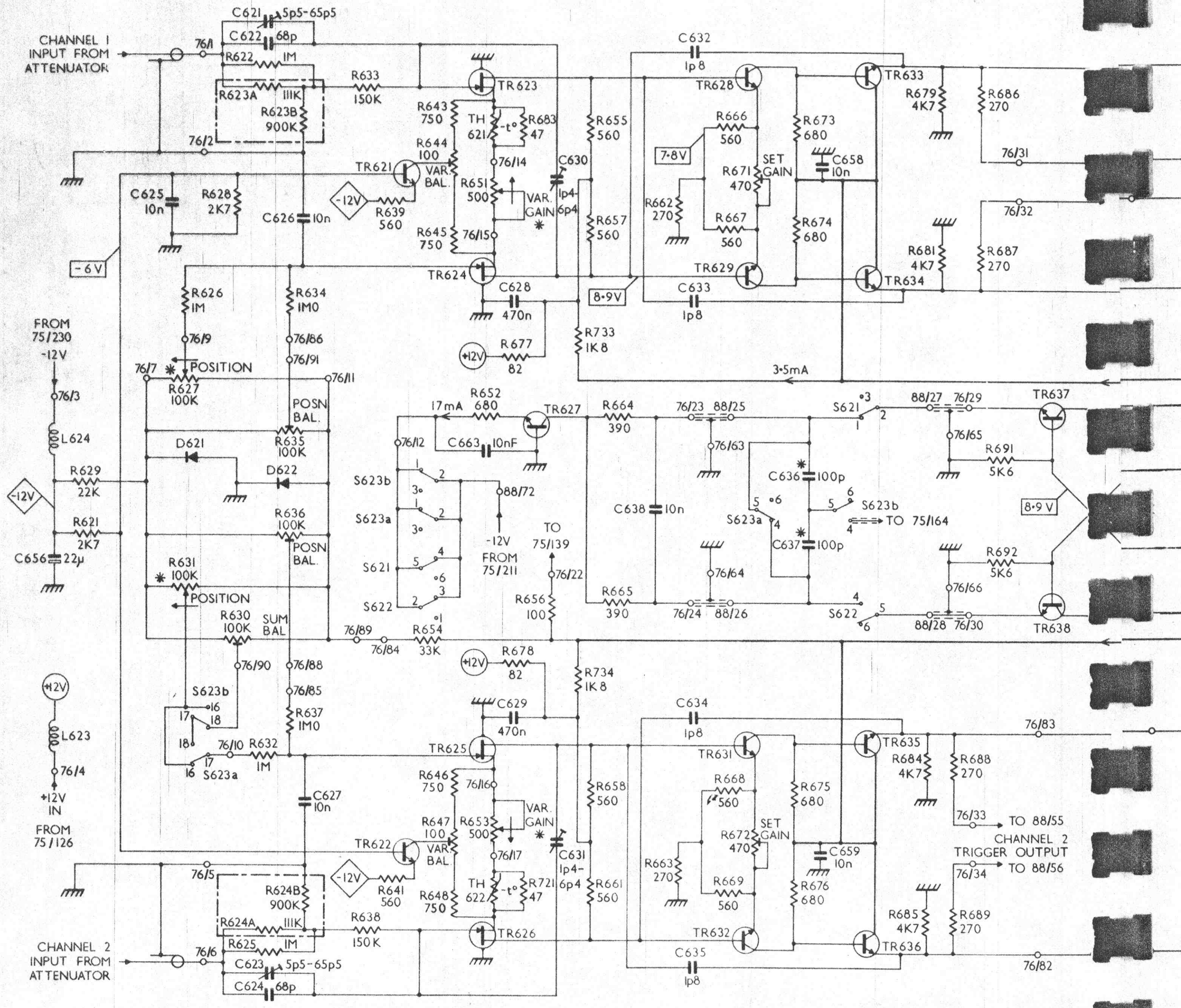

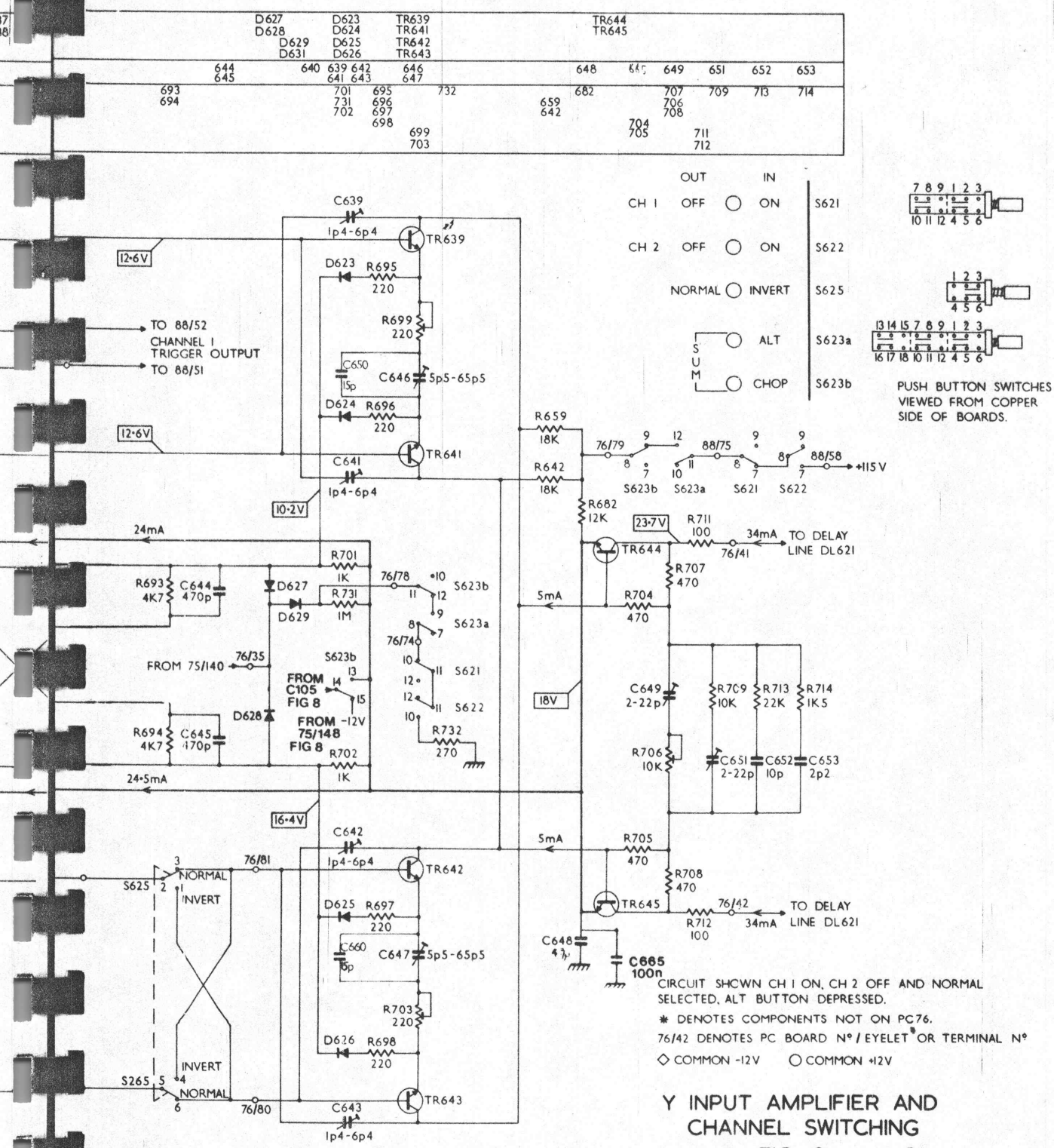

CIRCUIT SHOWN CH 1 ON, CH 2 OFF AND NORMAL SELECTED, ALT BUTTON DEPRESSED.

* DENOTES COMPONENTS NOT ON PC76.

76/42 DENOTES PC BOARD Nº / EYELET OR TERMINAL Nº

◇ COMMON -12V ○ COMMON +12V

Y INPUT AMPLIFIER AND CHANNEL SWITCHING

FIG. 3 ②

RESISTORS			R425 R716 R715 R717	R429 R718 R722 R719	R424 R428 R433	R723 R724		R725	R726 R727 R728 R729			R735 R738	R736 R737			R743 R744 R746 R747	R739 R745	R741 R742 R748 R749
CAPACITORS			C654		C434 C657	C655						C661 C662						
MISCELLANEOUS		D1621	L401		TR646		TR647 TR648	L621 L622						S624b	S624a	TR650 TR651		TR649 TR652

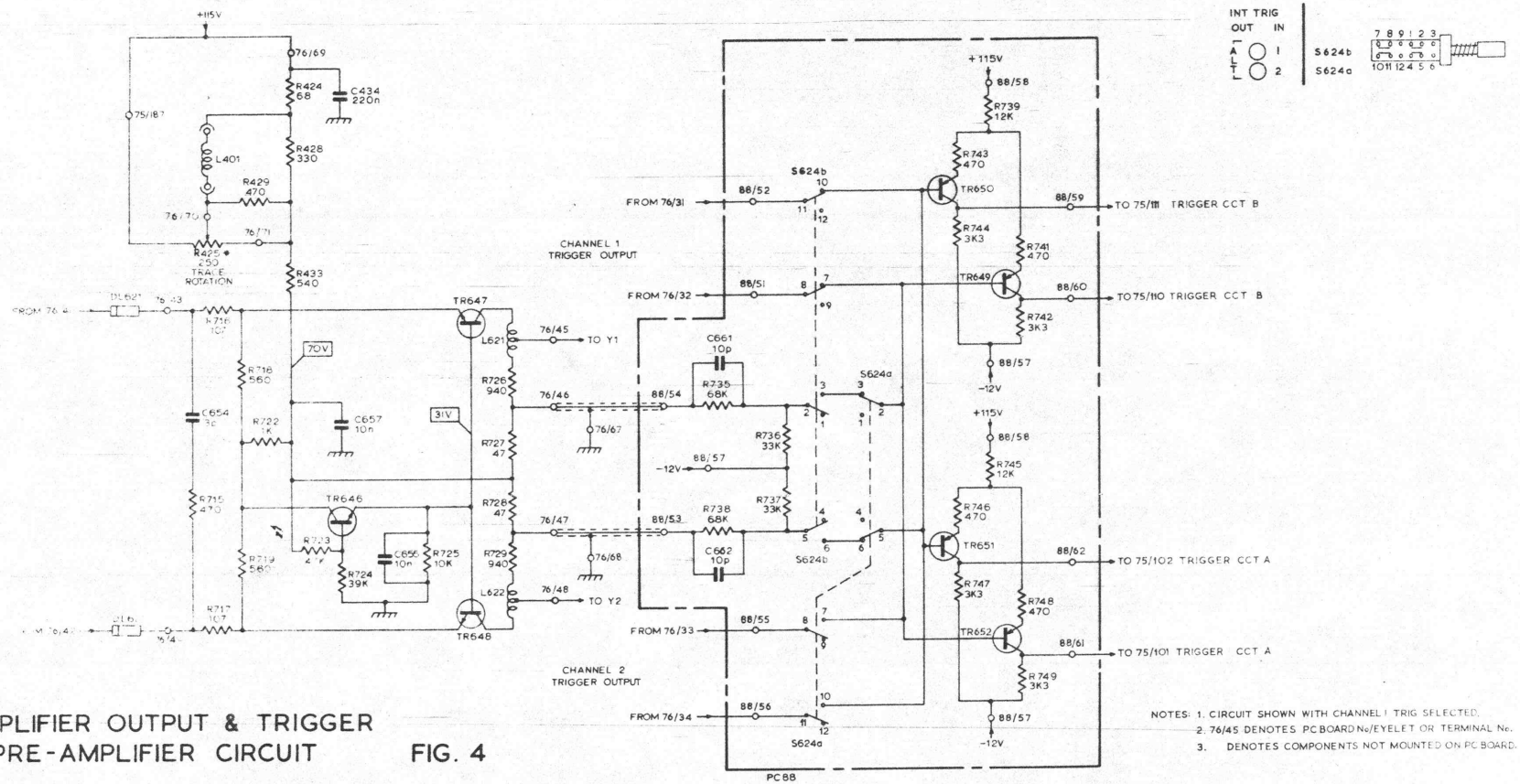

Y-AMPLIFIER OUTPUT & TRIGGER PRE-AMPLIFIER CIRCUIT FIG. 4

NOTES: 1. CIRCUIT SHOWN WITH CHANNEL 1 TRIG SELECTED.
2. 76/45 DENOTES PC BOARD No/EYELET OR TERMINAL No.
3. DENOTES COMPONENTS NOT MOUNTED ON PC BOARD.

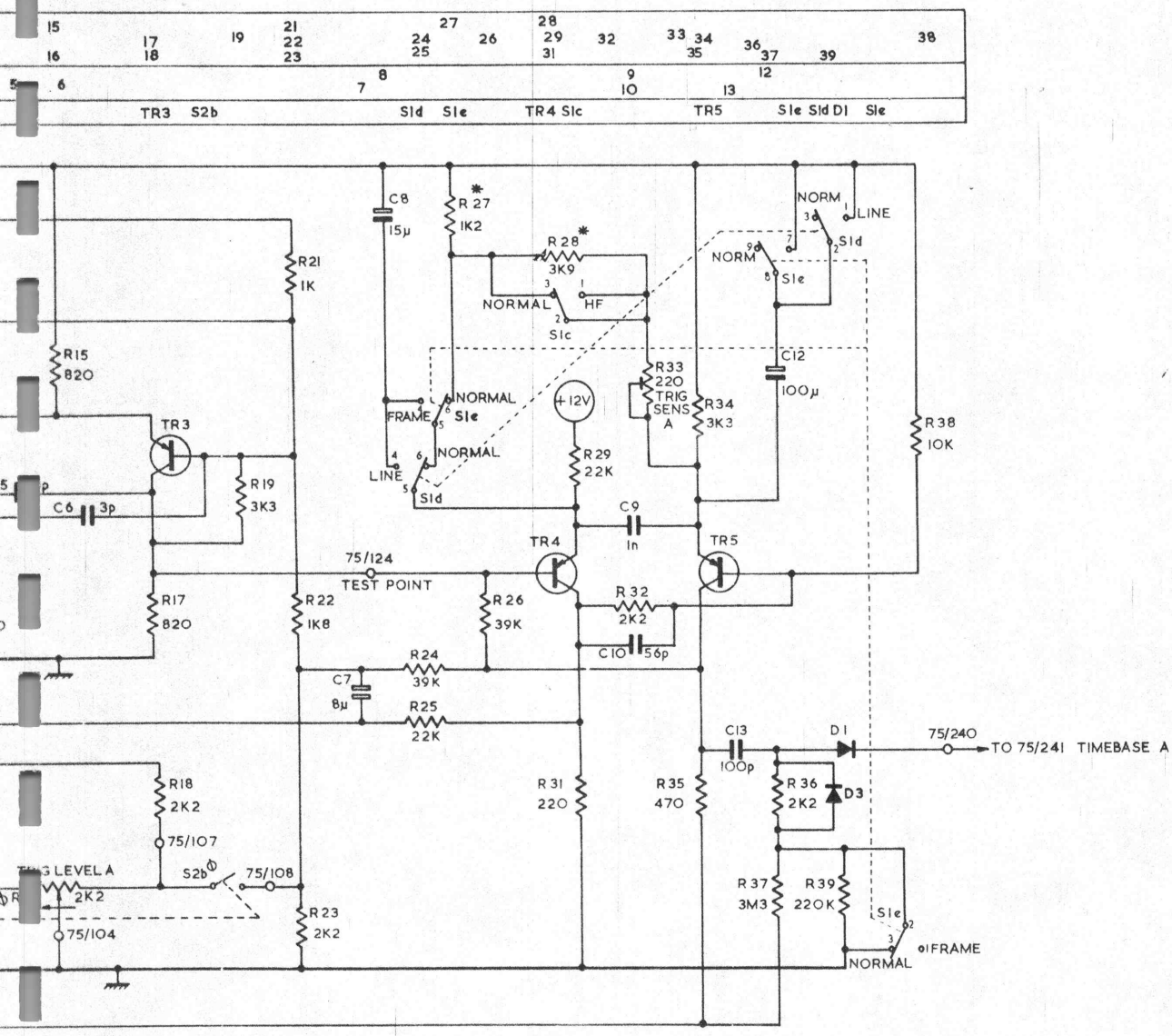

ENTS MOUNTED ON S1
ENTS MOUNTED ON
BO No/EYELET OR
HE OUT POSITION.

TRIGGER CIRCUIT A
FIG. 5

RESISTORS R	1, 40, 3, 2, 4, 5, 6, 7, 8, 9, 11, 12, 13, 14, 15, 16
CAPACITORS C	14, 1, 2, 11, 3, 4, 5, 6
MISCELLANEOUS	TR1 S1a S1b S2a TR2

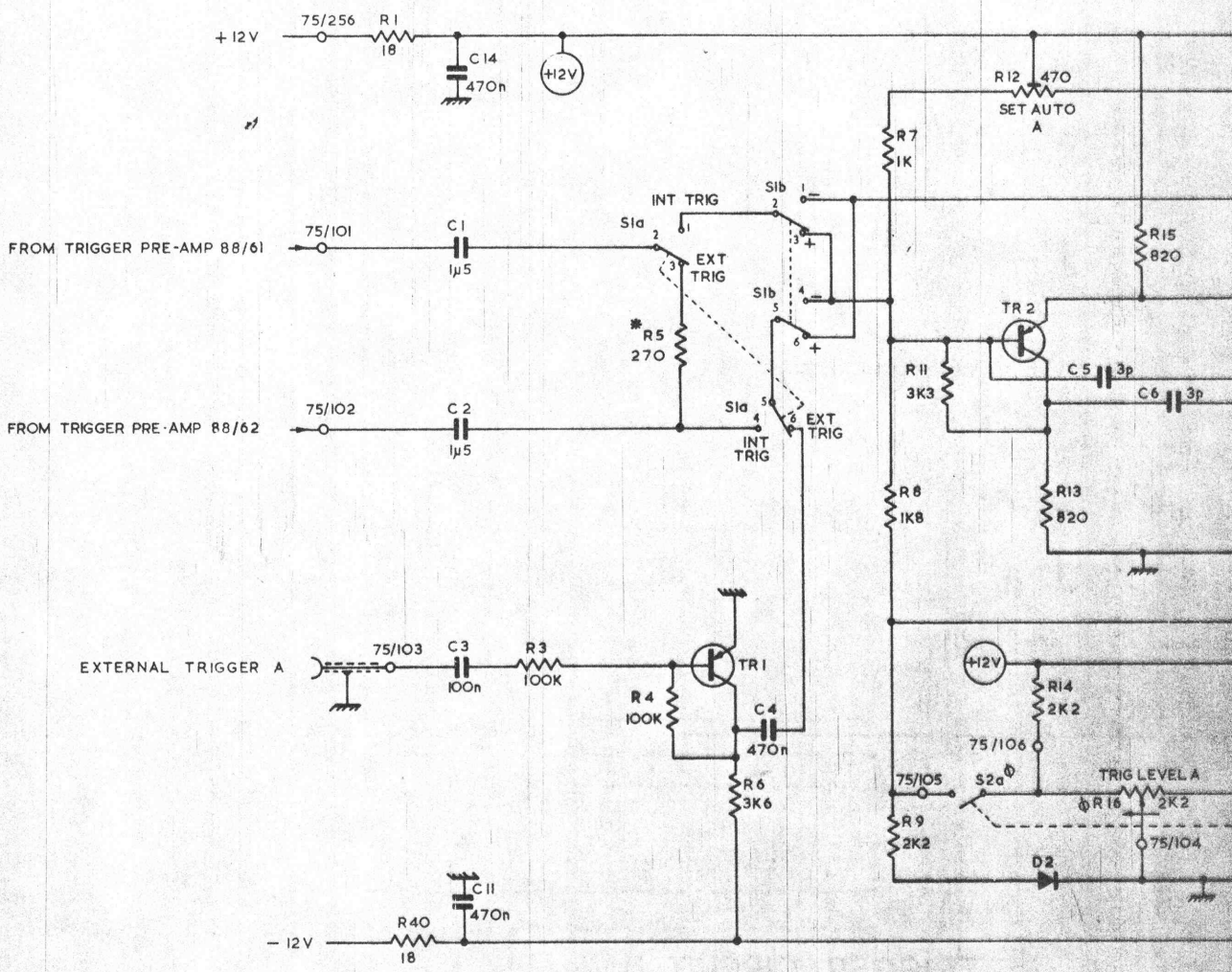

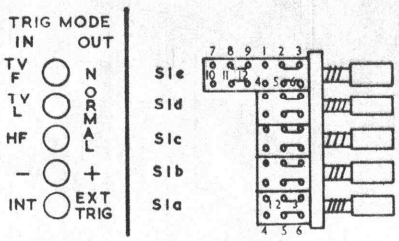

PUSH BUTTON SWITCH VIEWED FROM UNDERSIDE OF PC 75.

NOTES
1. * DENOTES COMPONENTS MOUNTED O
2. ϕ DENOTES COMPONENTS MOUNTED O FRONT PANEL.
3. 75/104 DENOTES PC BOARD No/EYELET TERMINAL No.
4. SWITCH S1 SHOWN IN THE OUT POSITION
5. ○ COMMON +12V.

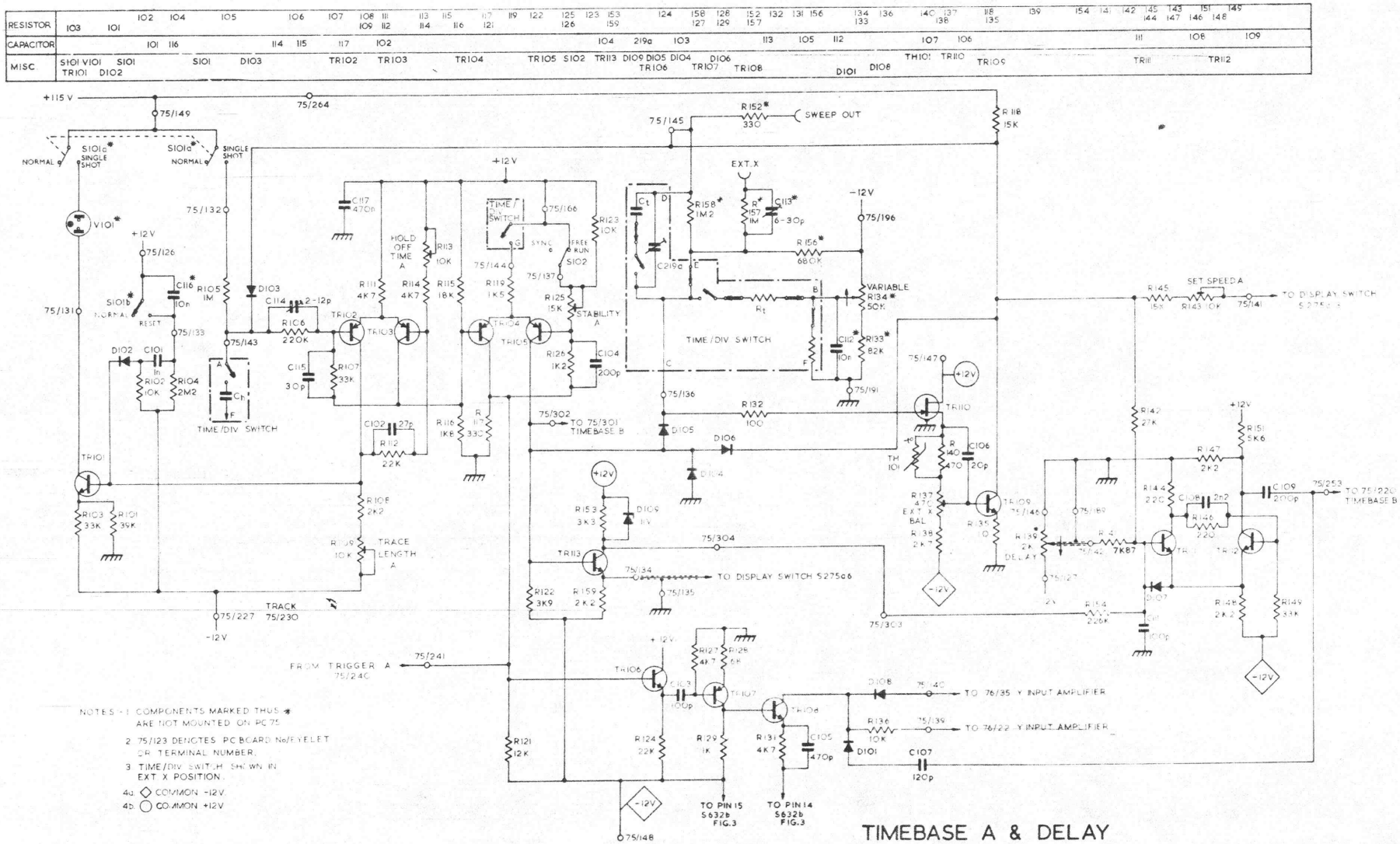

TIMEBASE A & DELAY

FIG. 8

RESISTORS	161 162 163 164 165 166 167 168 169 171 172 173 175 176 178 179 181 177 194 195 193 191 170 182 196 192 188 187 190 184 174 185 189 186
CAPACITORS	166 165 161 162 168 167 163 164
MISCELLANEOUS	D161 TR161 TR162 TR163 TR164 D165 S161 D166 TR167 D167 D162 D163 D164 TH161 TR166 TR165

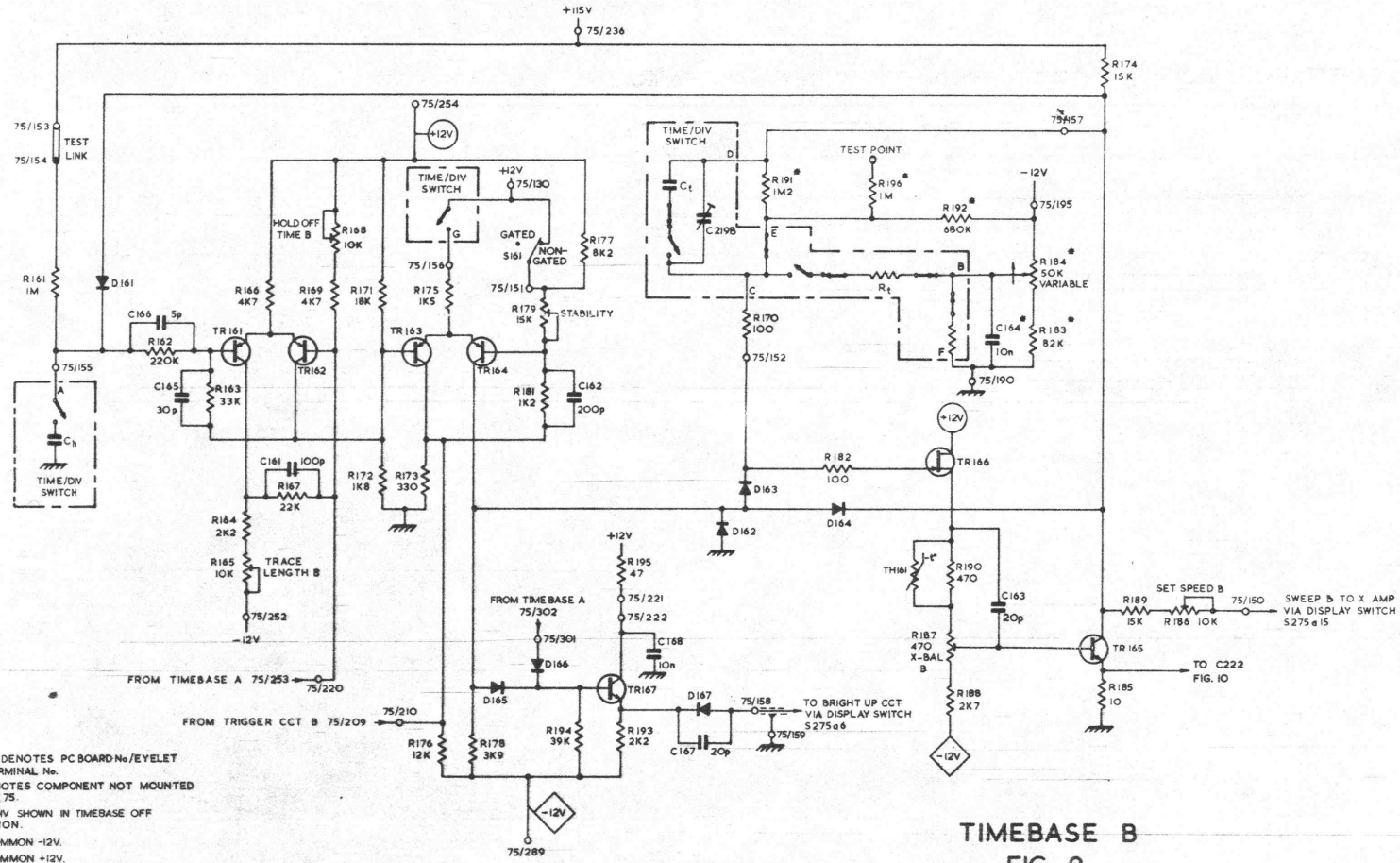

NOTES: 1. 75/123 DENOTES PC BOARD No/EYELET OR TERMINAL No.
2. * DENOTES COMPONENT NOT MOUNTED ON PC 75.
3. TIME/DIV SHOWN IN TIMEBASE OFF POSITION.
4a. ◇ COMMON -12V.
4b. ○ COMMON +12V.

TIMEBASE B
FIG. 9

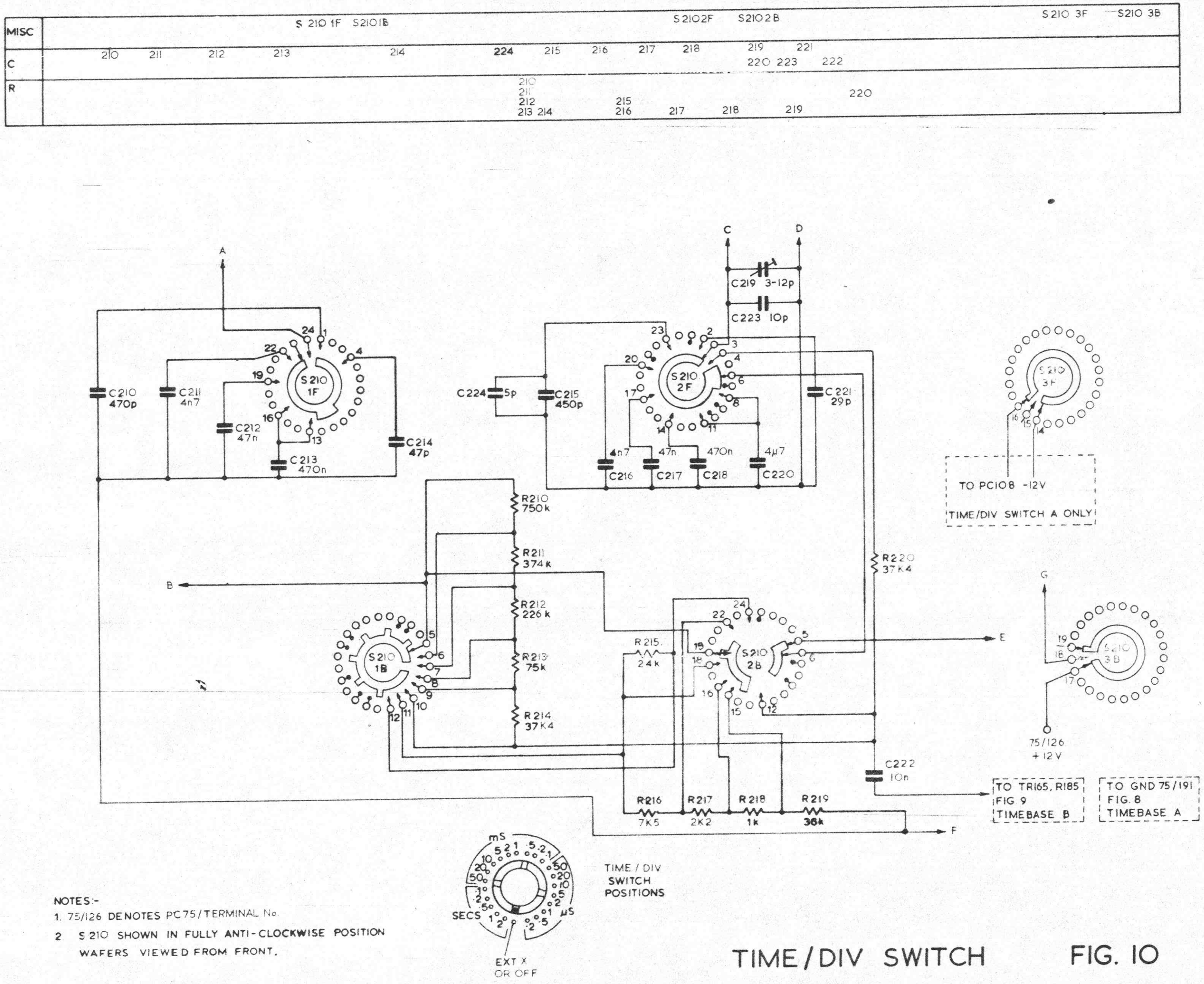

NOTES:-

1. 75/126 DENOTES PC75/TERMINAL No.
2. S 210 SHOWN IN FULLY ANTI-CLOCKWISE POSITION WAFERS VIEWED FROM FRONT.

TIME/DIV SWITCH FIG. 10

RESISTORS	284 281 282 285 287 289 293 294 298 295 296 297 299 291 292 286 283 288
CAPACITORS	280 278 279 277
MISC.	S275a S276 D281 TR276 D282 TR277 TR278

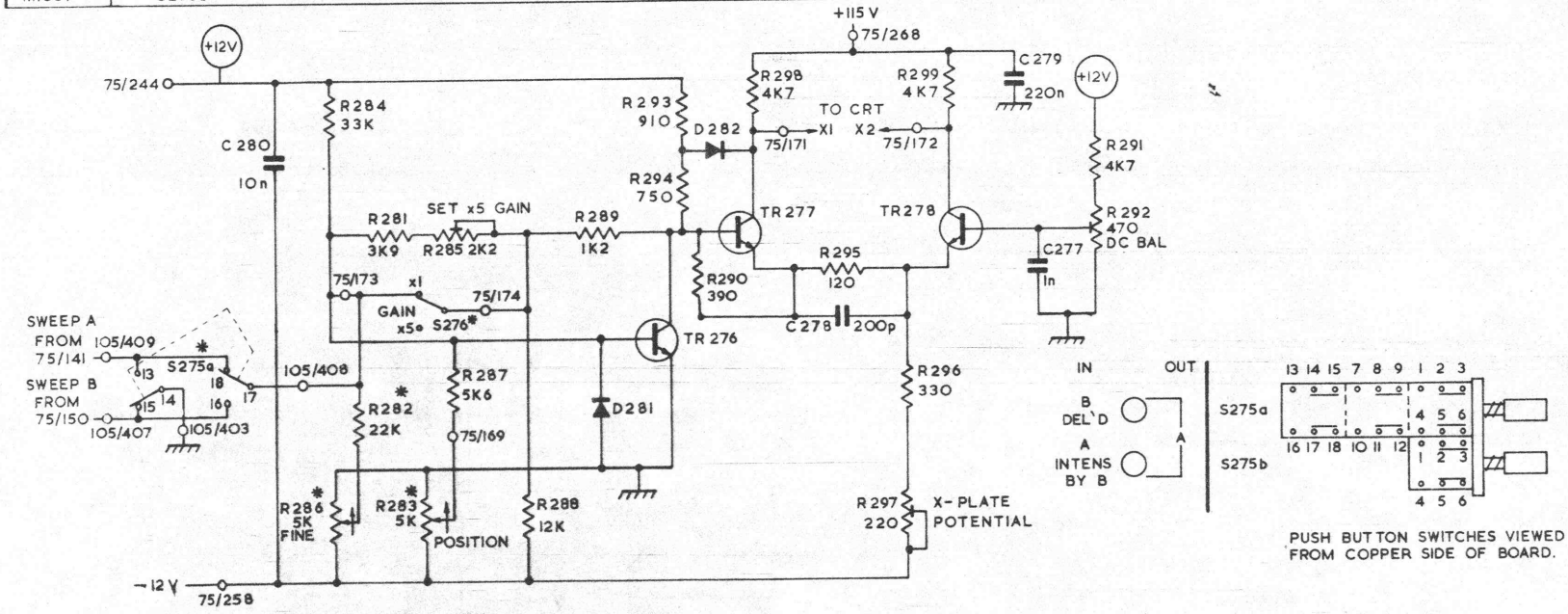

NOTES: 1. * DENOTES COMPONENT NOT MOUNTED ON PC 75

2. 75/244 DENOTES PC BOARD No/EYELET OR TERMINAL No.

3. ○ COMMON +12V.

X-AMPLIFIER

FIG. 11

RESISTORS	443 444 249 250 275 276 260 270 256 251 257 258 259 261 255 262 280 254 252 253 269 271 267 268 266 264 265 278 263 277 279 272 273 274
CAPACITORS	427 431 167 260 258 256 253 251 259 252 254 255 257
MISCELLANEOUS	D426 D427 D167 D431 D432 FB251 TR261 S275 TR262 D252 TR253 TR251 TR254 D255 TR252 D254 L275 RL275 TR256 TR255 TR257 TR259 D253 D251 TR258

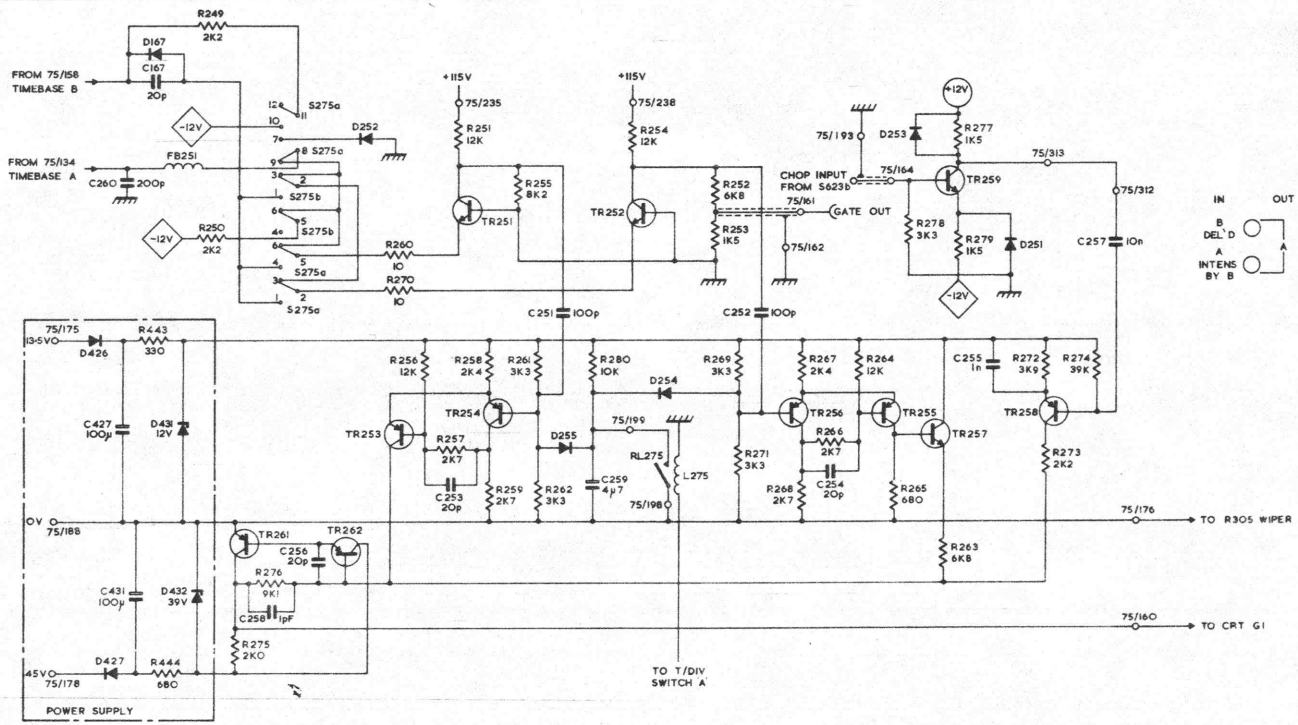

NOTES
* DENOTES COMPONENTS NOT MOUNTED ON PC 75.
75/160 DENOTES PC Nº/EYELET OR TERMINAL Nº.
◇ COMMON -12V.
○ COMMON +12V.

UNBLANKING AMPLIFIER
FIG. 12

INSTRUMENT	ON TEST	SETTING
CH1 INPUT		1MΩ 5mV
VOLT/DIV		0.2V
TIME/DIV		1ms

REFERENCE FIG.5

A TRIGGER
TR4 COLLECTOR
MONITOR T/D 5ms V/D 1V

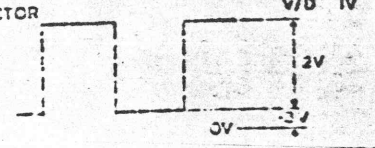

A TRIGGER
TR5 COLLECTOR
MONITOR T/D 5ms V/D 2V

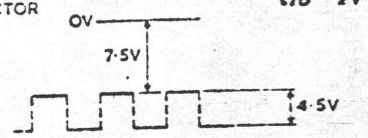

A TRIGGER
T. POINT 75/240
MONITOR T/D 5ms V/D 2V AC

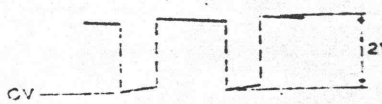

A TRIGGER
T. POINT 75/240
MONITOR T/D 5ms V/D 2V

NO INPUT

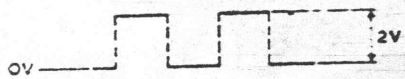

INSTRUMENT	ON TEST	SETTING
CH 1 & 2		OFF
'A' TRIG MODE		INT

REFERENCE FIG.5

A TRIGGER
T. POINT 75/124
MONITOR T/D 20ms V/D 1V DC

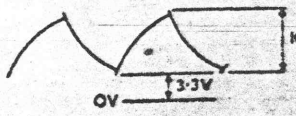

A TRIGGER
TR2 COLLECTOR
MONITOR T/D 20ms V/D 1V DC

A TRIGGER
75/124
MONITOR T/D 1ms V/D 1V DC

INSTRUMENT	ON TEST	SETTING
CH 1 INPUT		1V 50Hz
VOLT/DIV		1V
VERT MODE		ALT
TIME/DIV		1ms FREE RUN

REFERENCE FIG.6

B TRIGGER
TR52 COLLECTOR
MONITOR T/D 10ms V/D 1V

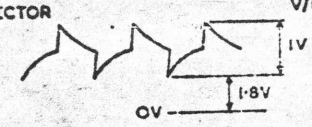

B TRIGGER
TR53 COLLECTOR
MONITOR T/D 10ms V/D 1V

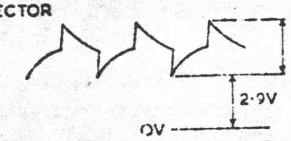

B TRIGGER
75/110
MONITOR T/D 10ms V/D ·5V

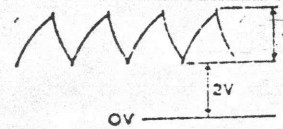

B TRIGGER
75/111
MONITOR T/D 10ms V/D ·5V

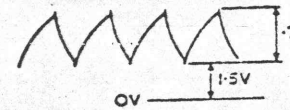

B TRIGGER
75/125
MONITOR T/D 10ms V/D 2V

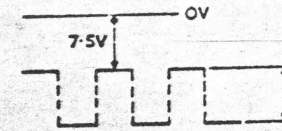

B TRIGGER
75/209
MONITOR T/D 10ms V/D 2V

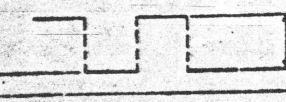

D67
TYPICAL.
WAVEFORM.

INSTRUMENT	ON TEST	SETTING
TIME/DIV		1ms FREE RUN
VARIABLE (T/D)		CAL
DELAY		5

NOTE DOTTED LINE INDICATES FAST RISE

REFERENCE FIG.6

A TIMEBASE
75/304
MONITOR T/D 2ms V/D 5V DC

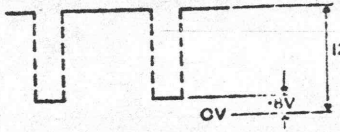

A TIMEBASE
TRI03 COLLECTOR
MONITOR T/D 2ms V/D 1V DC

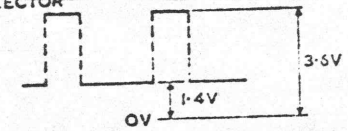

A TIMEBASE
TRI02 COLLECTOR
MONITOR T/D 5ms V/D 2V DC

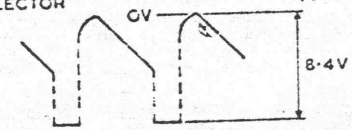

A TIMEBASE
TRI12 COLLECTOR
MONITOR T/D 5ms V/D 1V DC

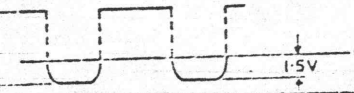

INSTRUMENT	ON TEST	SETTING
VARIABLE		CAL
TIME/DIV		1ms NON GATED
CH 1 & 2		OFF
TEST POINT 153		DISCONNECTED

REFERENCE FIG. 9

B TIMEBASE
TRI61 BASE
MONITOR T/D 5ms V/D 2V

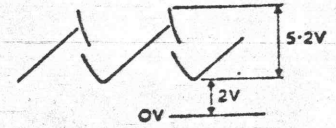

B TIMEBASE
TRI61 COLLECTOR
MONITOR T/D 5ms V/D 2V

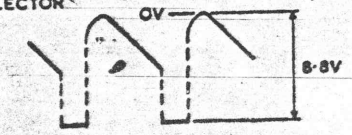

B TIMEBASE
TRI63 COLLECTOR
MONITOR T/D ·5ms V/D 2V

A TIMEBASE
TRI01 COLLECTOR
MONITOR T/D 2ms V/D 2V DC

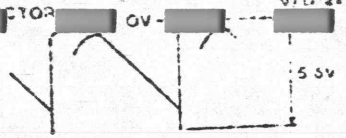

A TIMEBASE
TRI04 COLLECTOR
MONITOR T/D 1ms V/D 2V DC

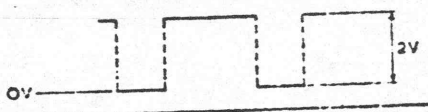

A TIMEBASE
TRI05 COLLECTOR
MONITOR T/D 1ms V/D 1V D

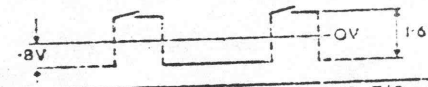

A TIMEBASE
TRI09 COLLECTOR
MONITOR T/D 5ms V/D 20V D

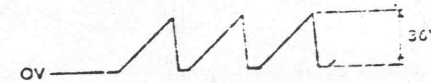

A TIMEBASE
TRI11 COLLECTOR
MONITOR T/D 5ms V/D 1V D

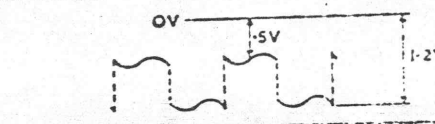

B TIMEBASE
TRI64 COLLECTOR
MONITOR T/D 2m V/D 1V

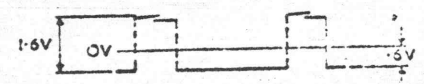

B TIMEBASE
TRI67 COLLECTOR
MONITOR T/D 2 V/D 2

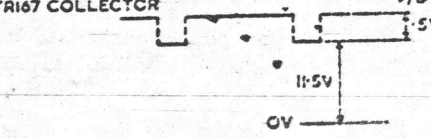

B TIMEBASE
TRI65 COLLECTOR
MONITOR T/D 5 V/D 2

Amendment List No. 1

Insert or amend component details to that shown below

Page No.	Cir.Ref.	Part Number	Value	Type	Tol.%	Rating	Change No.
2/3	Add "The power cord may be secured by bolts to comply with local legislation."						
4/3	Para:18.5	Change 100mVpp to 76mVpp (for improved AUTO triggering)					---
/5	C402,C403	285-0992-00					(856.1)
	C410,C411	285-0992-00					(856.1)
5/7	C912	281-0155-00	2 - 22pF				
	C913	281-0154-00	2 - 12pF				
/10	D1621	636-0006-00					(1044)
5/12	R20	315-0181-01	180R	C	5	250mW	(984)
/17	R301	307-0418-00	750K	Fixed Film	2	1 Watt	(1015)
	R302	307-0418-00	750K	Fixed Film	2	1 Watt	(1015)
	R304	307-0418-00	750K	Fixed Film	2	1 Watt	(1015)
	R306	Test selected value range 470K to 680K					
	R310	Delete in total					
5/18	R400	302-0333-01	33K	C	10	500mW	(985)
	R410A	316-0100-01	10Ω	C	10	250mW	---
5/24	T401	120-0594-01					
5/25	TR106,TR108	BSX20/2N2369/2N5769					
	TR111-TR113	BSX20/2N2369/2N5769					
	TR167	BSX20/2N2369/2N5769					
5/26	TR259	BSX20/2N2369/2N5769					
	TR277,TR278	151-0257-01 or -03	BF305 or FRB749				(1043)
	TR402	2N4899/2N3741					
	TR404	2N3702/MPS3702/2N5447					
	TR406	E1530/2N2219A					
	TR412,TR413	BSX20/2N2369/2N5769					
5/27	TR621,TR622	BSX20/2N2369/2N5769					
	TR627	BSX20/2N2369/2N5769					
	TR628,TR629	151-0424-00	2N5769/2N2369				
	TR631,TR632	151-0424-00	2N5769/2N2369				
	TR633-TR639	BSX20/2N2369/2N5769					
	TR641-TR643	BSX20/2N2369/2N5769					
	TR644,TR645	151-0424-00	2N5769/2N2369				
	TR646	BSX20/2N2369/2N5769					
	TR647,TR648	E1530/2N2219A					
5/29	MECHANICAL						
	Line 1	213-0238-00	Delete				
	5	136-0381-00	change to 136-0457-01				
	6	136-0645-00	change to 136-0049-00				
	9	361-0308-00	change to 361-0537-01				
	16	385-0208-00	change to 385-0214-00				(1042)
	21	131-0260-00	Delete				
	27	378-0605-02	change to 378-0605-03				
	33	366-1237-02	change to 366-1237-00				
	34	366-1239-00	change to 366-1024-02				
	35	366-1241-00	change to 366-1002-00				
	41	366-1255-00	change to 366-1031-04				
	44	220-0578-00	Delete				
	46	131-1021-00	change to 131-0371-00				
5/30	Atten.	262-0949-05	Delete: R909				
	PC75	670-1836-02	Add: D2, D3, D52, D53, R400				
	PC76	670-1835-02	Add: C660				
	Timebase "A"	262-0953-01	Add: C113, C223, R133, R134, R152, R156-R158				
	Timebase "B"	262-0954-01	Add: C223, C224, R183, R184, R191, R192, R196				
	"Y" Amp	644-0029-03	Add: PC74, PC88				

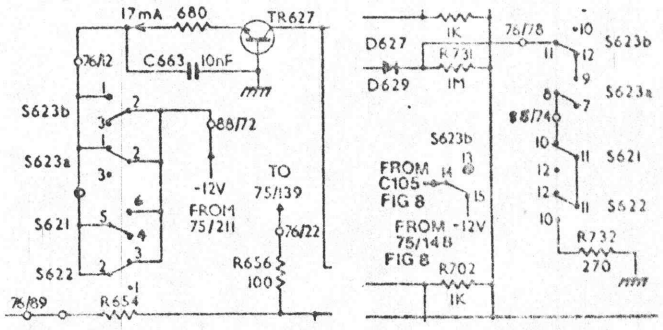

Fig. 3

	R302	307-0418-00	750K	Fixed Film	2	1 Watt	(1015)
	R304	307-0418-00	750K	Fixed Film	2	1 Watt	(1015)
	R306	Test selected value range 470K to 680K					
	R310	Delete in total					
5/18	R400	302-0333-01	33K	C	10	500mW	(985)
	R410A	316-0100-01	10Ω	C	10	250mW	---

5/24	T401	120-0594-01	
/25	TR106,TR108	BSX20/2N2369/2N5769	
	TR111-TR113	BSX20/2N2369/2N5769	
	TR167	BSX20/2N2369/2N5769	
/26	TR259	BSX20/2N2369/2N5769	
	TR277,TR278	151-0257-01 or -03 BF305 or FRB749	(1043)
	TR402	2N4899/2N3741	
	TR404	2N3702/MPS3702/2N5447	
	TR406	E1530/2N2219A	
	TR412,TR413	BSX20/2N2369/2N5769	
5/27	TR621,TR622	BSX20/2N2369/2N5769	
	TR627	BSX20/2N2369/2N5769	
	TR628,TR629	151-0424-00 2N5769/2N2369	
	TR631,TR632	151-0424-00 2N5769/2N2369	
	TR633-TR639	BSX20/2N2369/2N5769	
	TR641-TR643	BSX20/2N2369/2N5769	
	TR644,TR645	151-0424-00 2N5769/2N2369	
	TR646	BSX20/2N2369/2N5769	
	TR647,TR648	E1530/2N2219A	

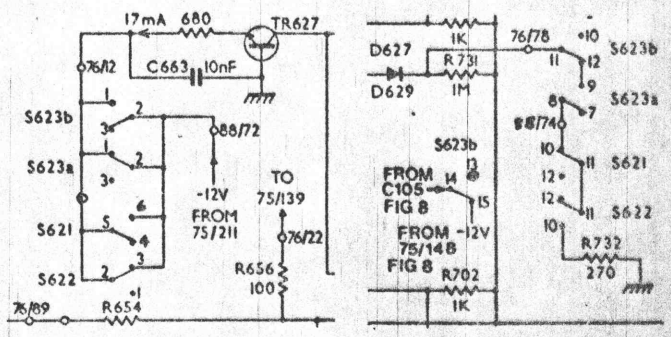

Fig. 3

5/29	MECHANICAL		
	Line 1	213-0238-00	Delete
	5	136-0381-00	change to 136-0457-01
	6	136-0645-00	change to 136-0049-00
	9	361-0308-00	change to 361-0537-01
	16	385-0208-00	change to 385-0214-00 (1042)
	21	131-0260-00	Delete
	27	378-0605-02	change to 378-0605-03
	33	366-1237-02	change to 366-1237-00
	34	366-1239-00	change to 366-1024-02
	35	366-1241-00	change to 366-1002-00
	41	366-1255-00	change to 366-1031-04
	44	220-0578-00	Delete
	46	131-1021-00	change to 131-0371-00
5/30	Atten.	262-0949-05	Delete: R909

PC75	670-1836-02	Add: D2, D3, D52, D53, R400
PC76	670-1835-02	Add: C660
Timebase "A"	262-0953-01	Add: C113, C223, R133, R134, R152, R156-R158
Timebase "B"	262-0954-01	Add: C223, C224, R183, R184, R191, R192, R196
"Y" Amp	644-0029-03	Add: PC74, PC88

Fig. 2	C912 (2 - 22pF) and C913 (2 -12pF)	
Fig. 8	Tag 75/126	Delete /126 and +12V Add: 75/242 connected to chassis
Fig. 12	D254	Change to D255; D255 change to D254
Fig. 14	R410A	Add in parallel with R410 (10Ω) and change PC104 to PC144

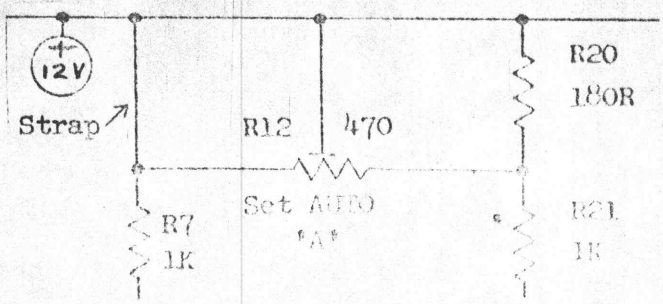

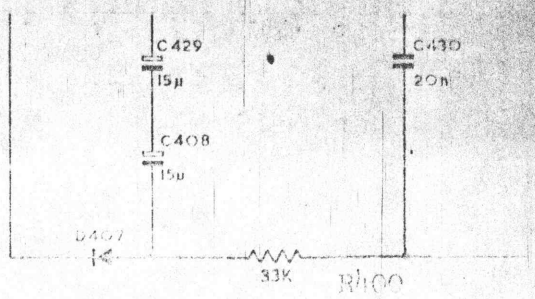

RESISTORS	405 412, 446 447, 415, 407, 404 411, 448 417, 301 302 305 310 303 304 306, 307
CAPACITORS	406,405 407,428 408,429, 430, 432, 417, 301, 30
MISCELLANEOUS	D406 D407, TR401 TR407 D405 D404 D403 D429 D413 TR409, D425 D424 D417, D301

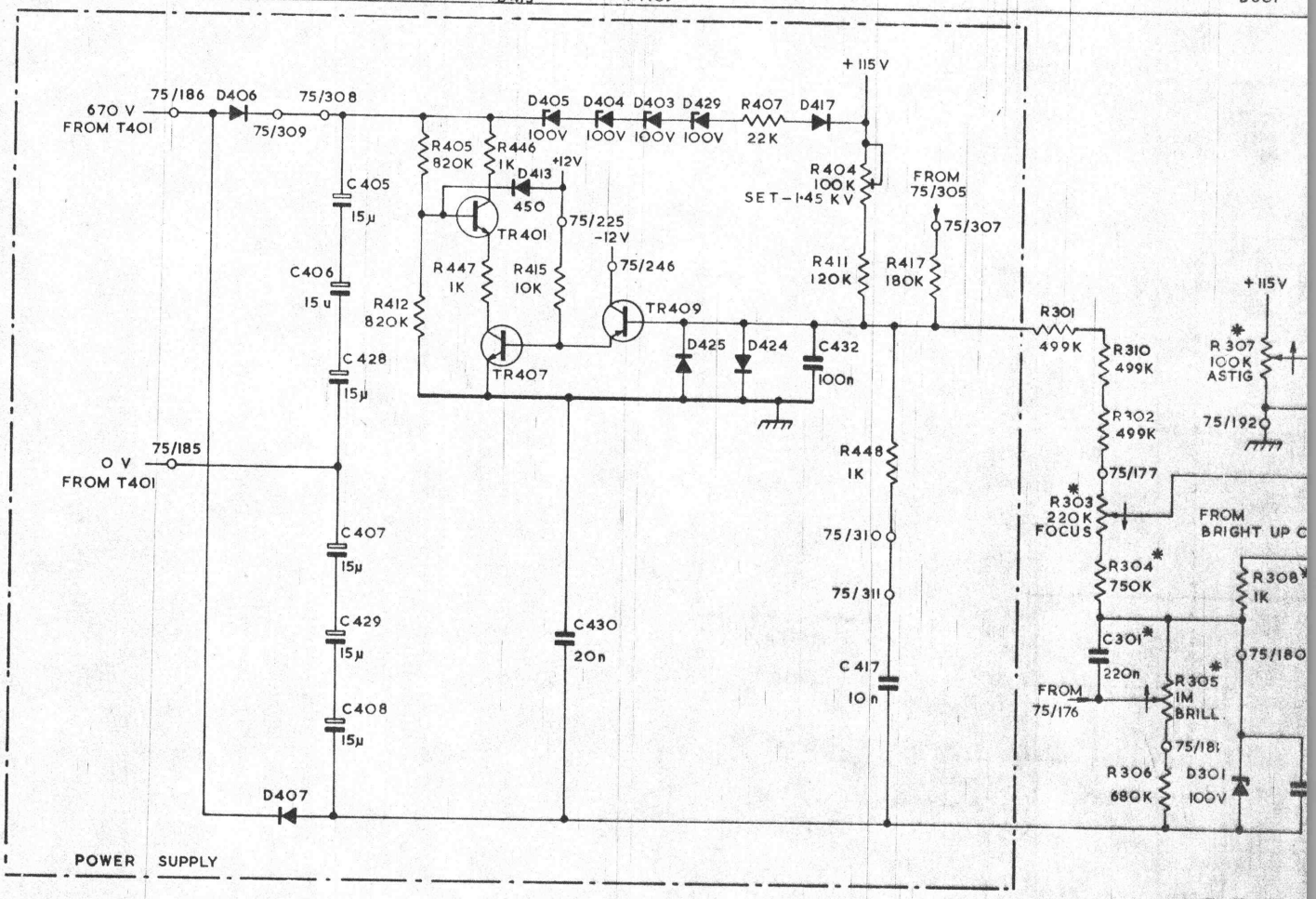

NOTES 1 ⊠ DENOTES COMPONENTS MOUNTED ON PC 76
2 ✱ DENOTES COMPONENTS NOT MOUNTED ON PC75 OR PC76
3 75/177 DENOTES PC BOARD No/EYELET OR TERMINAL No.

C.R.T.
FI

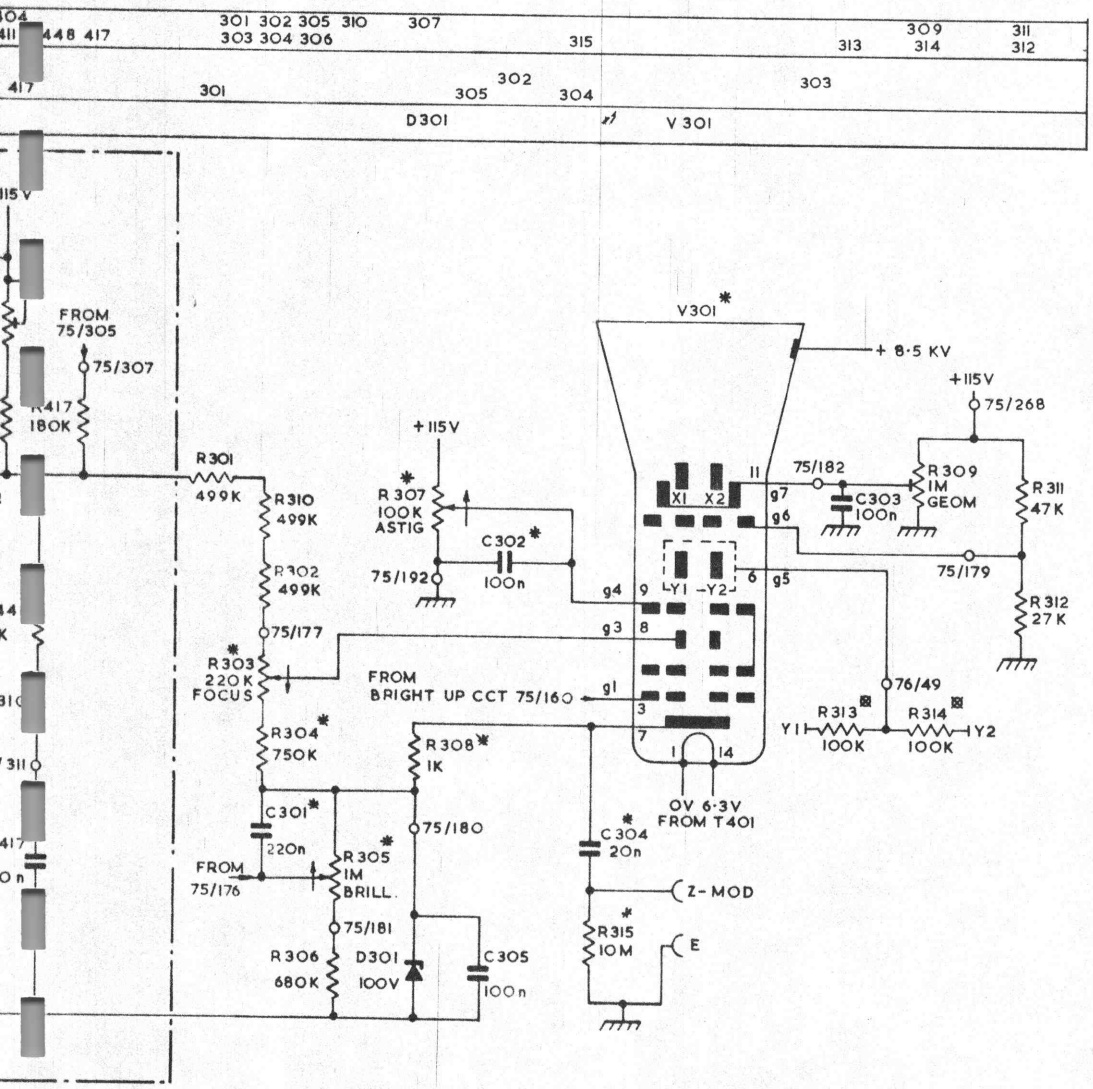

C.R.T. CIRCUIT
FIG. 13

RESISTORS	401 451 403 440 408 449 430 413 410 402 406 409 414
CAPACITORS	402 433 403 401 404 411 410 413 415 412 416 414
MISCELLANEOUS	FS401 S401 T401 ILP402 ILP401 D411 D408 ILP403 D402 D410 D409 D415 D412 D401 D414 D416 D418 D419 TR402 TR403 D421 D422 TR405

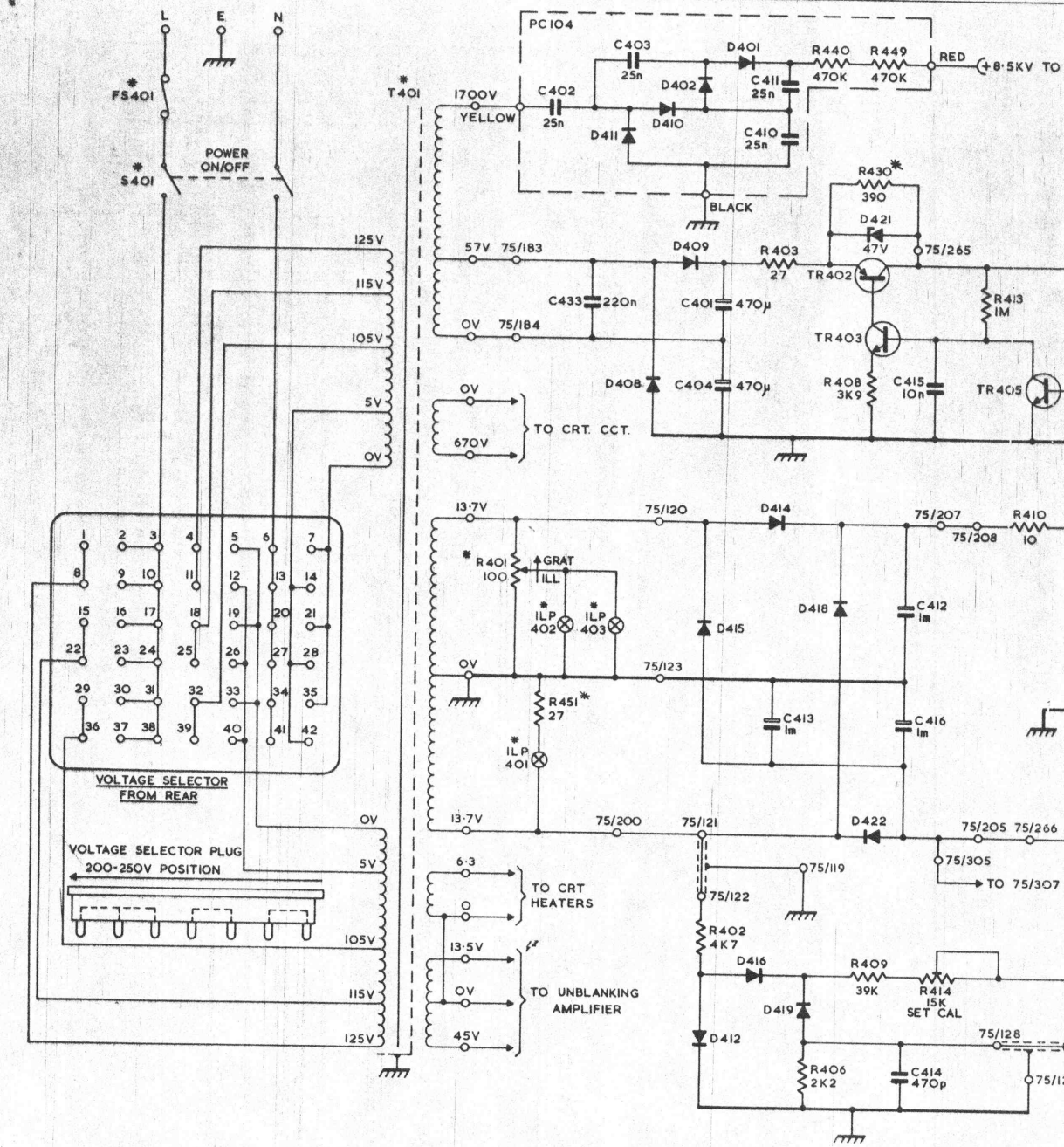

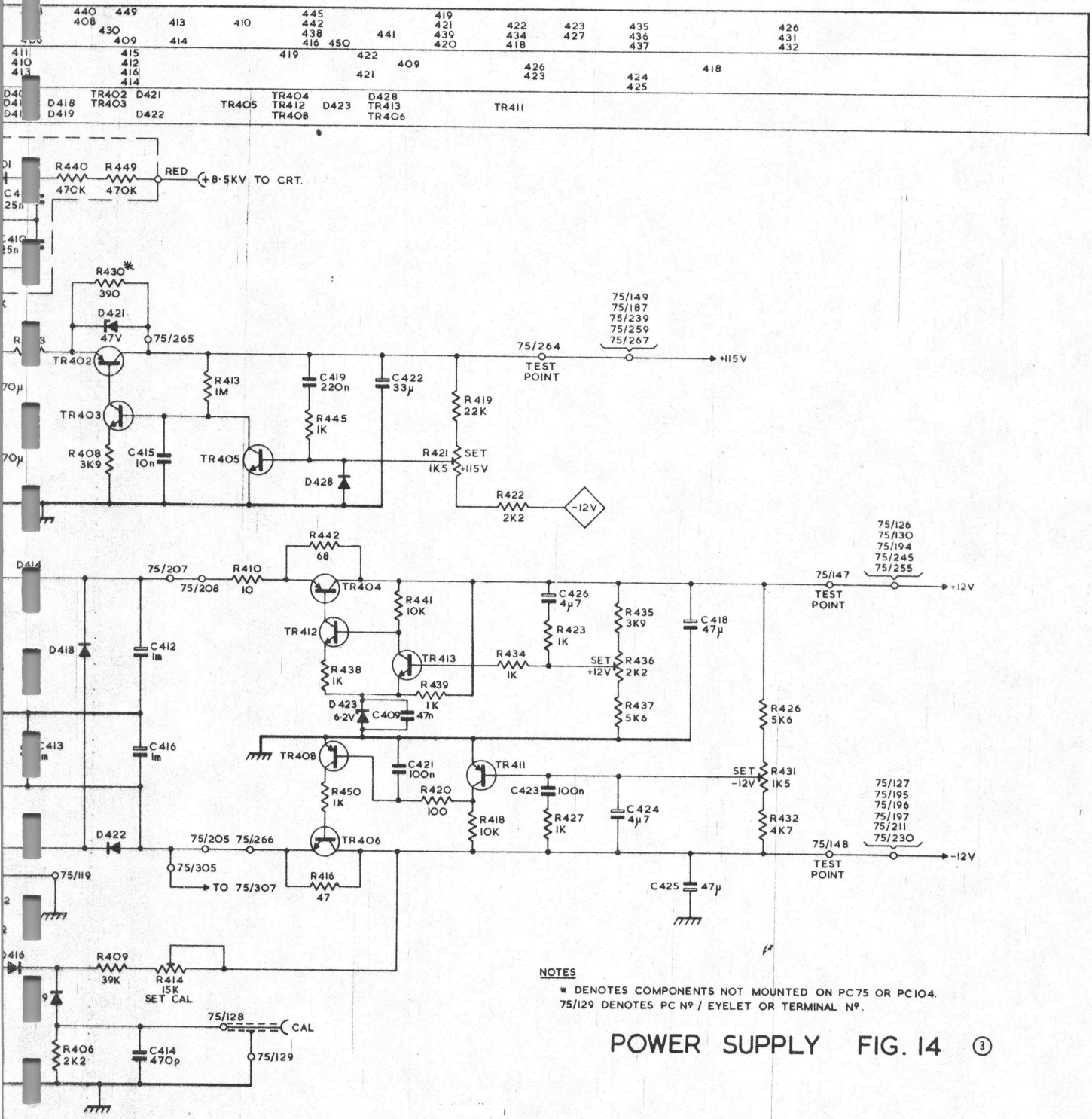

NOTES

* DENOTES COMPONENTS NOT MOUNTED ON PC75 OR PC104.
75/129 DENOTES PC Nº / EYELET OR TERMINAL Nº.

POWER SUPPLY FIG. 14 ③