TEKTRONIX®

AF 501 BANDPASS FILTER

INSTRUCTION MANUAL

Tektronix, Inc.
P.O. Box 500
Beaverton, Oregon 97077

Serial Number _____

070-1770-01

First Printing JUNE 1974

WARRANTY

All Tektronix instruments are warranted against defective materials and workmanship for one year. Any questions with respect to the warranty should be taken up with your Tektronix Field Engineer or representative.

All requests for repairs and replacement parts should be directed to the Tektronix Field Office or representative in your area. This will assure you the fastest possible service. Please include the instrument type number or part number and serial number with all requests for parts or service.

Specifications and price change privileges reserved.

U.S.A. and foreign Tektronix products covered by U.S. and foreign patents and/or patents pending.

TABLE OF CONTENTS

WARNING

The remaining portion of this Table of Contents lists servicing instructions that expose personnel to hazardous voltages. These instructions are for qualified service personnel only.

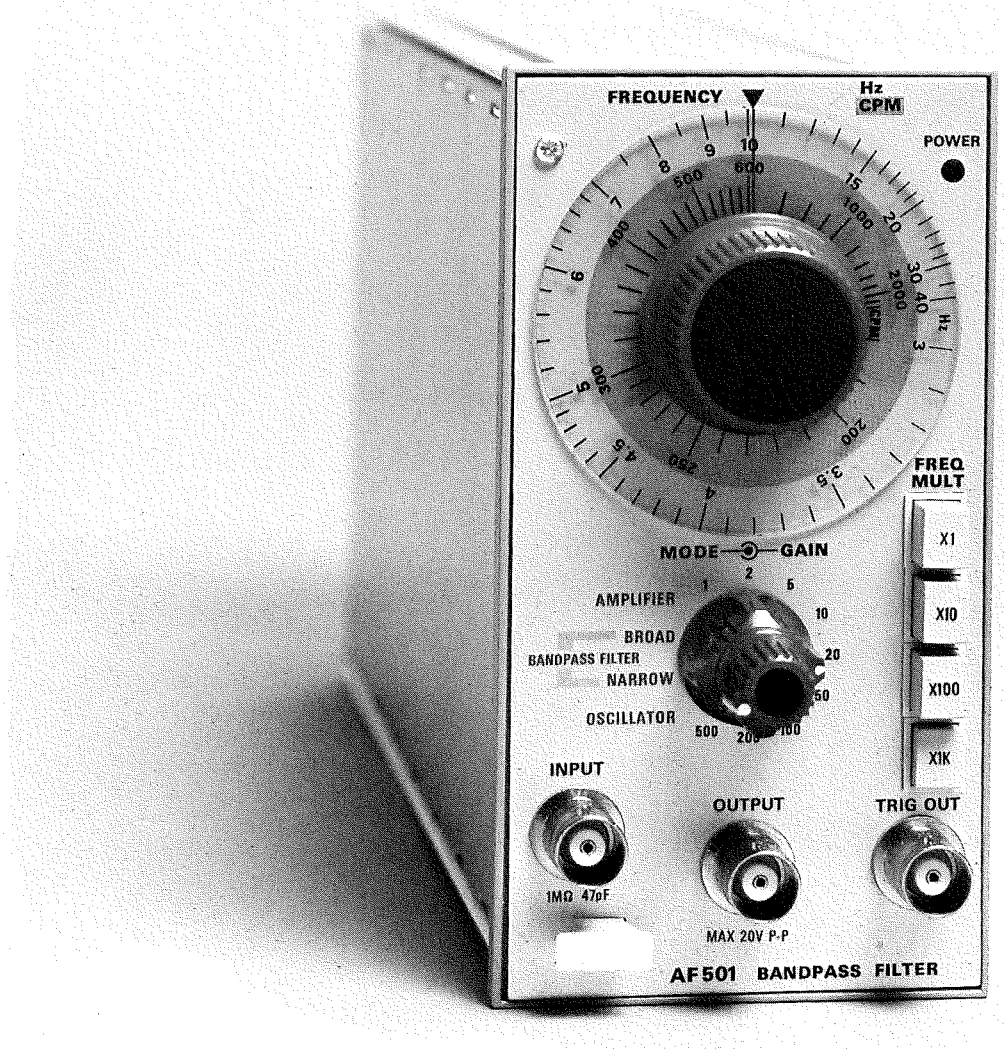

1770-1

AF 501 Bandpass Filter plug-in unit.

@

OPERATING INSTRUCTIONS

INTRODUCTION

The AF 501 is a bandpass-filter amplifier, ac-coupled amplifier, and sine-wave generator designed to operate in a single TM 500-series module. Used alone or in conjunction with other TM 500-series instruments, the AF 501 is a highly versatile and accurate signal analysis tool. When used as a bandpass filter, it has an effective Q of 5 in the BROAD position or 15 in the NARROW position. In both the BANDPASS FILTER and OSCILLATOR mode of operation, the tuning range is from 3 hertz to 35 kilohertz. As an ac-coupled, broadband amplifier the AF 501 range iis from 0.5 hertz to 50 kilohertz.

Three front-panel bnc connectors are provided: an INPUT connector for amplifier and bandpass filter input signals; an OUTPUT connector for output signals from the amplifier, bandpass filter and oscillator; and a TRIG OUT connector for internally generated pulses. The Trig Out pulse, generated when the positive slope of an output signal greater than 500 millivolts peak-to-peak passes through zero, has an amplitude of at least 10 volts and a duration of 10 ±5 microsecond. It can be used to trigger an oscilloscope sweep or strobe-light, or used as an input to a frequency counter.

A single knob with a frequency range from 3 hertz to 35 kilohertz is used for tuning the bandpass filter or oscillator. The dial readout, in Hz and CPM (cycles per minute), has a range from 3 to 40 Hz and 180 to 2400 CPM. Frequency multiplication of X1, X10, X100 and X1K is provided by front-panel, self-cancelling, pushbuttons.

Installation and Removal

CAUTION

Turn the power module off before inserting the plug-in; otherwise, damage may occur to the plug-in circuitry. It is also recommended that the power module be turned off before removing the AF 501. Refer to Fig. 1-1. Check to see that the plastic barriers on the interconnecting jack of the selected power module compartment match the cut-outs in the AF 501 circuit board edge connector.

Align the AF 501 chassis with the upper and lower guides of the selected compartment. Push the module in and press firmly to seat the circuit board in the interconnecting jack.

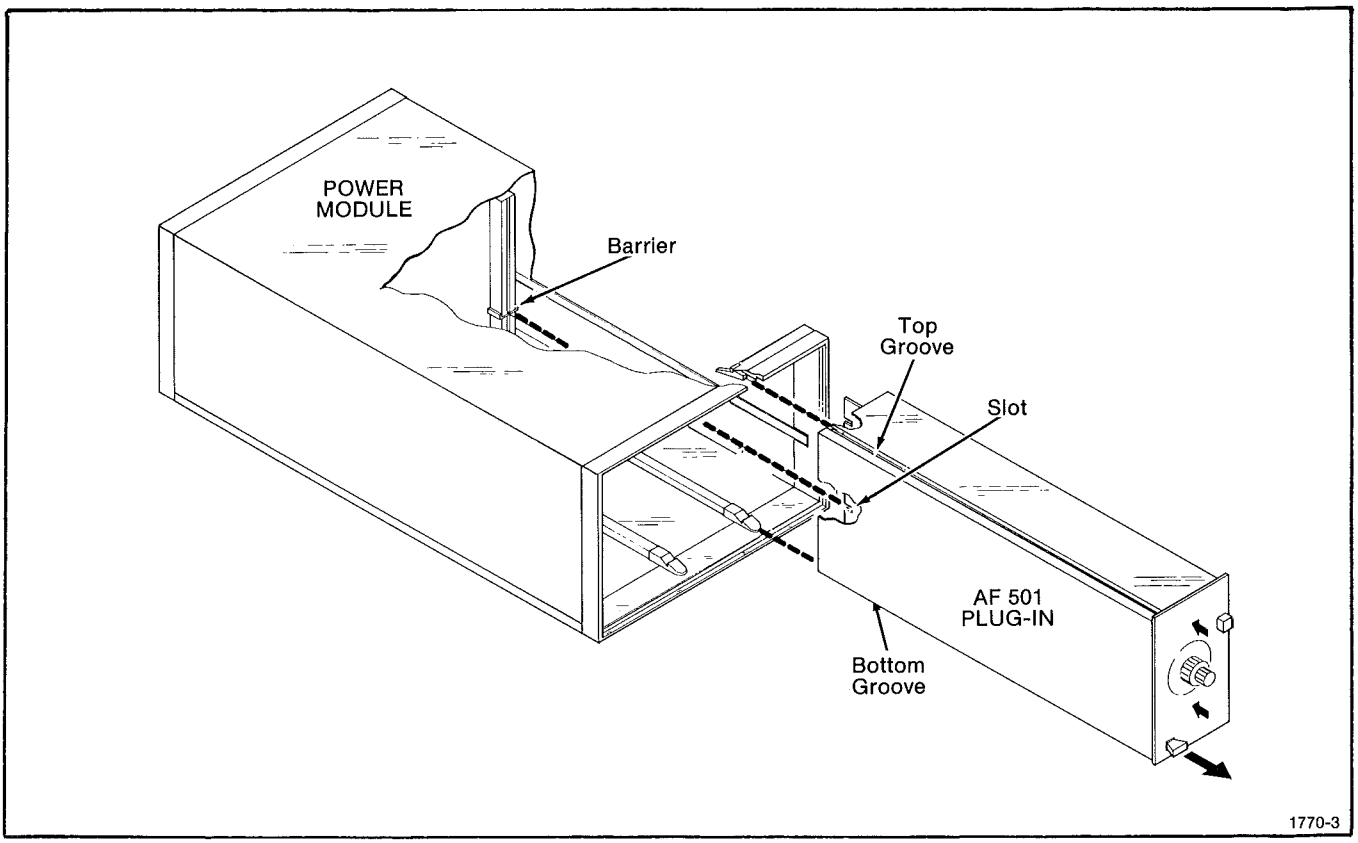

Fig. 1-1. Plug-in module installation/removal.

FREQUENCY Hz, CPM Dial

Variable from 3 to 40 in Hz range; 180 to 2400 in CPM range. Selects bandpass filter frequency or oscillator output frequency.

GAIN Switch

Selects GAIN in AMPLIFIER (BROAD and NARROW) from 1 to 500 in a 1, 2, 5 sequence. Determines the output voltage in the OSCILLATOR mode (1, 2, or 5 volts only).

MODE Switch

Selects AMPLIFIER, BROAD or NARROW BANDPASS FILTER, or OSCILLATOR operating mode.

INPUT Connector

BNC connector for amplifier, bandpass filter signal input.

Release Latch

Pull to remove plug-in.

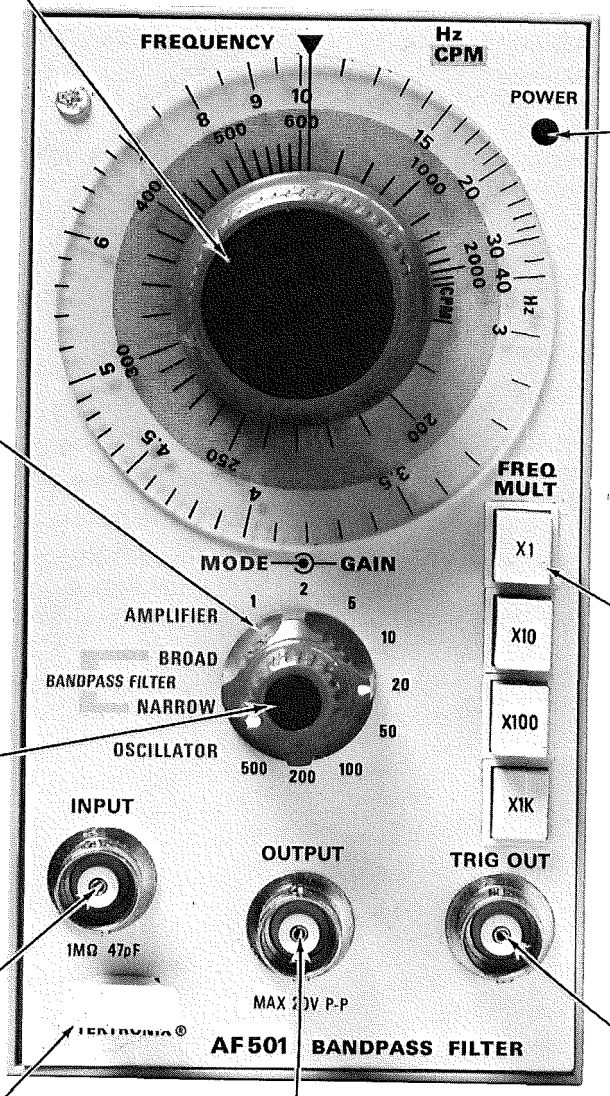

POWER Indicator

When lit, indicates power is applied.

FREQ MULT Pushbutton

Self-canceling pushbuttons. Multiply the FREQUENCY Hz, CPM dial setting, by the number shown on the depressed button, to obtain bandpass filter tuning frequency or oscillator output frequency.

TRIG OUT Connector

BNC connector for output pulse coincident with the frequency of the output signal.l

OUTPUT Connector

BNC connector for amplifier, bandpass filter and oscillator output signal.

1770-4

Fig. 1-2. AF 501 controls and connectors.

To remove the AF 501, pull on the release latch located in the lower left corner until the interconnecting jack disengages and the AF 501 will slide out.

Controls and Connectors

Refer to Fig. 1-2. Even though the AF 501 is fully calibrated and ready to use, the functions and actions of the controls and connectors should be reviewed before attempting to use it. Pull the Power switch on the power module to apply power to the AF 501. The POWER indicator light indicates when power is applied to the AF 501.

OPERATING CONSIDERATIONS

Overheating

The AF 501 is designed to operate at an ambient temperature from 0-degree Celsius to +50-degree Celsius. However, when operating several power supplies in a multi-plug-in power module, especially at low output voltages, or when operating close to other heat-producing equipment, internal temperature may exceed safe limits and actuate a thermal cutout in the power module. Refer to the power module instruction manual for more complete information.

OPERATING MODES

Amplifier

When the MODE switch is set to AMPLIFIER, the AF 501 functions as an ac-coupled, single-ended amplifier, with a bandwidth ranging from 0.5 hertz to 50 kilohertz, maximum 20 volts peak-to-peak output and X500 maximum amplification. The gain from 1 to 500 is controlled by the GAIN switch in a 1, 2, 5 sequence.

NOTE

The AF 501 may be used with a 10X voltage probe. Slew rate at the probe tip must not exceed 2.5 volts per microsecond. This is especially true when using a pulse for compensating the probe. If the slew rate limitation is exceeded, the input capacitance of the AF 501 is no longer constant making compensation impossible.

The amplifier (and bandpass filter) output signal of maximum 20 milliamperes peak-to-peak at 20 volts peak-to-peak, and 50 milliamperes peak-to-peak at 10 volts peak-to-peak, can be used to drive the majority of galvanometers or provide amplification of low-level signals for other subsequent instrumentation. By adding a resistor in series with the output, lower current limits can be obtained when needed.

Bandpass Filter, Narrow and Broad

When the MODE switch is set to one of the BANDPASS FILTER positions, the AF 501 functions as a tunable bandpass filter amplifier. The tuning range is from 3 hertz to 35 kilohertz. There are two bandpass filter switch positions. The effective Q of the filter is approximately 15 in the NARROW position or approximately 5 in the BROAD position. In the BROAD setting, tuning is not as critical, but the signal will not be cleaned-up as well as in the NARROW setting.

The FREQUENCY knob can be adjusted to tune the AF 501 to a single frequency of the input signal, which can be read from the FREQUENCY dial readout.

Oscillator

The AF 501 operates as an oscillator ranging from 3 hertz to 35 kilohertz when the MODE switch is set to that position. Output voltage of 1, 2, or 5 volts peak-to-peak sine-wave, controlled by the GAIN switch is available at the OUTPUT connector. The leading digit marking the GAIN switch position indicates the voltage output. In other words, switch positions 1, 10 and 100 all provide a 1-volt output; 2, 20 and 200 produce a 2-volt output; and switch positions 5, 50, and 500 provide a 5-volt output.

APPLICATIONS

Amplifier

The AMPLIFIER mode can be used to check the input signal to the AF 501. To examine the input signal from a transducer, for example, set the MODE switch to AMPLIFIER and observe the amplified output waveform on a monitor. To find the amplitude of the input signal, divide the amplitude displayed on the monitor by the gain setting of the AF 501.

If the waveform display of the input signal is "clipped" in the AMPLIFIER mode, it is an indication that the input signal or the AF 501 gain setting is too large.

Bandpass Filter, Narrow and Broad

With the MODE switch set to one of the BANDPASS FILTER positions, the AF 501 can be used for amplification, and accurate frequency and amplitude component analysis in complex vibration, sound and ultrasound signals. Using a monitor or oscilloscope, the AF 501 can be used to clean up noisy waveforms for dynamic balancing of rotating machines or to look at higher-order, shock-type disturbances. Such disturbances may occur in engines, compressors, ball bearings, etc. caused by valve action, looseness, wear, leaks or blowdry. See Fig. 1-3 for reference.

To tune the center frequency of the bandpass filter to one of the frequency components of an input signal, connect the signal source or transducer to the INPUT connector oof the AF 501. The type of signal source used determines whether volts, amps or some other quantity is measured. Connect the OUTPUT connector of the AF 501 to an oscilloscope or other monitoring device.

Set the MODE switch to BANDPASS FILTER, NARROW or BROAD, depending on the requirements and set the GAIN switch high enough so there is sufficient signal to be detected at the OUTPUT. Make sure the input signal or gain is not so high that it overdrives the amplifier. (Check by switching the MODE switch to the AMPLIFIER position and verify that the signal displayed on a cathode-ray-tube monitor or oscilloscope is not "clipped".) Adjust the FREQUENCY knob to display maximum amplitude on the monitor. The AF 501 is now tuned to a single frequency on the input signal which can be read from the FREQUENCY dial readout. The amplitude can be read from the monitor.

The bandpass filter (as well as the amplifier) output signal can be used to drive a galvanometer up to 50 milliamperes peak-to-peak or amplify low-level signals.

The TRIG OUT pulse in BANDPASS FILTER mode can be used to accurately measure the frequency of a repetitive input signal with a counter. The TRIG OUT signal provides this same tuned frequency when the AF 501 is switched to the OSCILLATOR mode. Thus, with an appropriate input signal a counter can be used to calibrate the FREQUENCY dial in either the BANDPASS FILTER mode or the OSCILLATOR mode of operation.

With a dual channel counter having Ratio A/B capabilities, the order of frequency components can be read-out directly. To do this, connecting the signal from TRIG OUT (in BANDPASS FILTER mode) to Channel A and connect the basic reference signal, such as 1X rpm shaft pip mark, to Channel B. See Fig. 1-4 for reference.

Oscillator

The oscillator frequency, controlled by the FREQUENCY dial and FREQ MULT pushbuttons, is the same as the center frequency of the bandpass filter. Therefore, with the AF 501 used in the OSCILLATOR mode, the center frequency of the bandpass filter can be displayed on a frequency counter using the signal from TRIG OUT to trigger the counter.

In the OSCILLATOR mode of operation, a method of tuning the filter to the rotational speed of a shaft or rotor is to connect a strobeoscope to TRIG OUT, which freezes the shaft motion. Another method is to compare the OSCILLATOR sine-wave frequency with the signal frequency of an electromagnetic pick-up on a dual-trace oscilloscope, or on a dual-channel counter.

Specific Applications

Figs. 1-3 through 1-5 show three specific applications using the AF 501, along with the waveform analysis of the performed measurement. These applications illustrate the many possible uses for the AF 501.

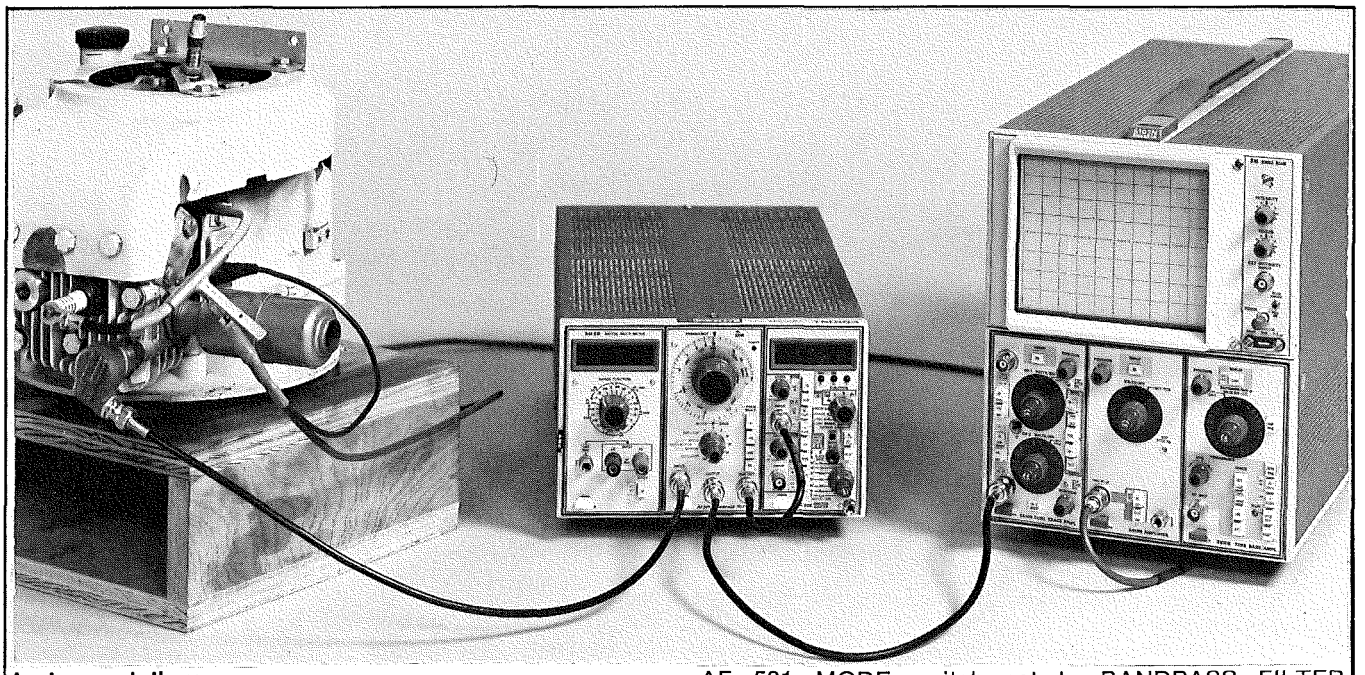

Instrumentation:

AF 501 Bandpass Filter installed in a TM 500-Series Power Module with DC 503 Universal Counter and DM 501 Digital Multimeter.

Unfiltered Vibration Pattern

5110 Oscilloscope with 5A18, 5A15 and 5B10 plug-ins

Sweep Rate:≈15 ms/div
Vertical Sensitivity: 20 mV/div

Lawn Mower Test Engine (710 rpm)

Vibration Transducer (Accelerometer, 40 Hz to ≈11 kHz), Tektronix Part No. 015-0116-00

Ignition Pick-off, Tektronix Part No. 012-0139-00

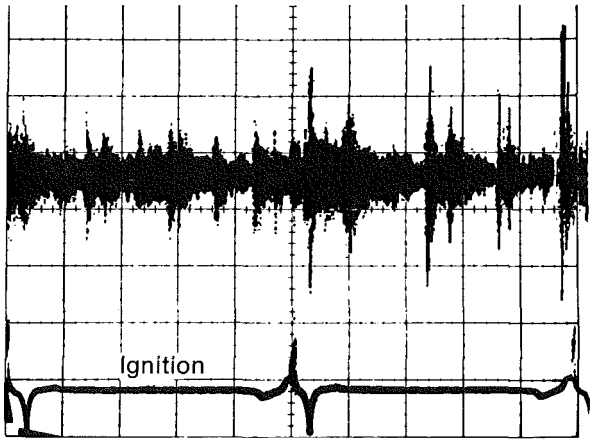

AF 501 MODE switch set to BANDPASS FILTER
Oscilloscope Sweep Rate: ≈15 ms/div

Filtered Vibration Pattern

NARROW; FREQUENCY dial tuned to 11.8 Hz (1 X rpm)
Oscilloscope Vertical Sensitivity: 0.25 mV/div

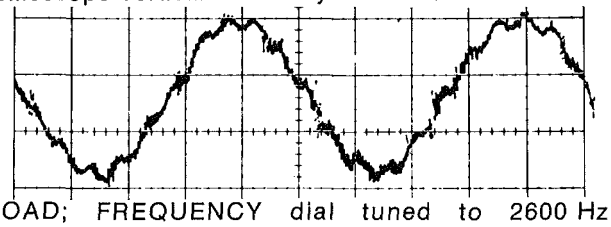

BROAD; FREQUENCY dial tuned to 2600 Hz
Oscilloscope Vertical Sensitivity: 15 mV/div

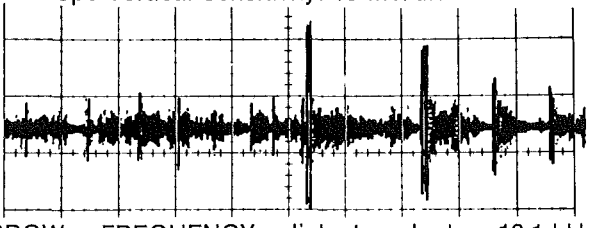

NARROW; FREQUENCY dial tuned to 10.1 kHz
Oscilloscope Vertical Sensitivity: 25 mV/div

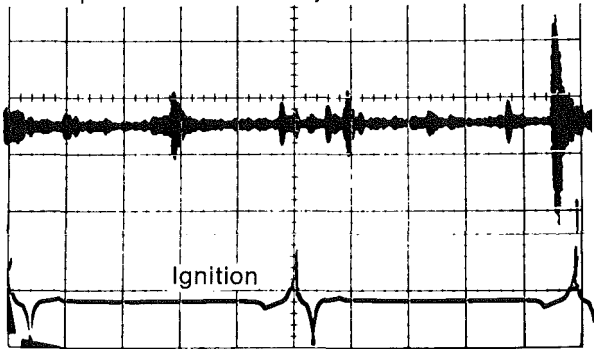

1770-5

Fig. 1-3. Equipment setup required for performing engine vibration test.

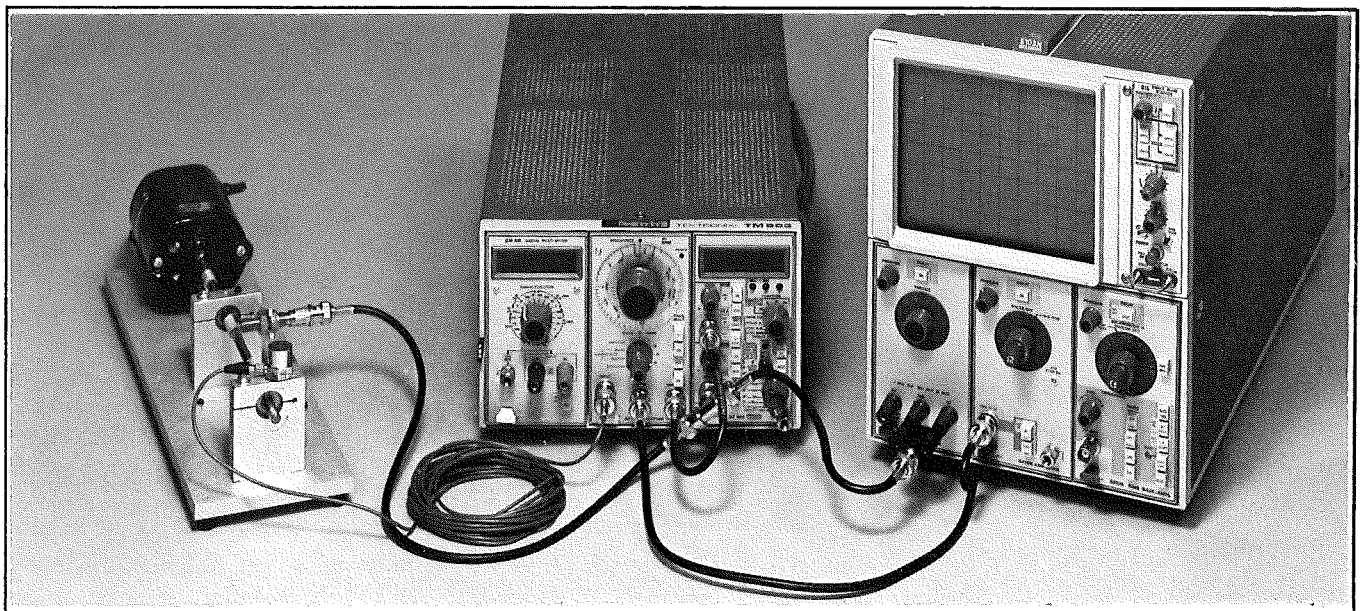

Instrumentation:

AF 501 Bandpass Filter installed in a TM 500 Series Power Module with DC 503 Universal Counter (Dual channel, in Ratio A/B to indicate frequency of vibration as a multiple of shaft rpm), and DM 501 Digital Multimeter (to indicate rms signal out).

Unfiltered Vibration Pattern

5115 Oscilloscope with 5A24, 5A15 and 5B10 plug-ins.

Sweep Rate: ≈10 ms/div
Vertical Sensitivity: 100 g/div

Ball bearing with 6 balls (290 rpm), crack in outer race.

Accelerometer (15 Hz to ≈40 kHz), Tektronix Part No. 015-0165-00.

Electro-magnetic pick-up, Tektronix Part No. 015-0119-00.

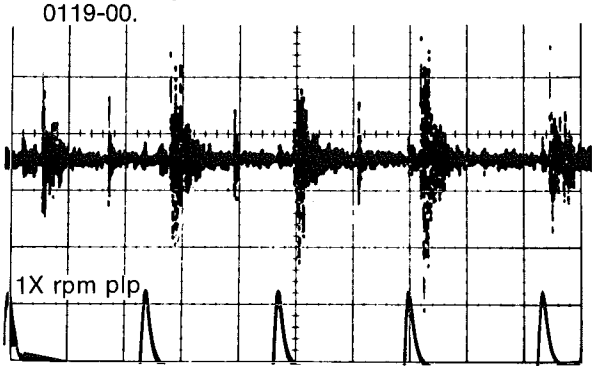

AF 501 MODE switch set to BANDPASS FILTER
Oscilloscope Sweep Rate: ≈10 ms/div

Filtered Vibration Pattern

NARROW; FREQUENCY dial turned to 2900 cpm (48 Hz)
Oscilloscope Vertical Sensitivity: .04 g/div

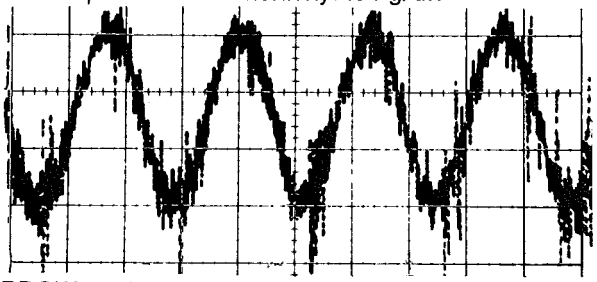

NARROW; FREQUENCY dial tuned to 24 kHz
Oscilloscope Vertical Sensitivity: 2.5 g/div

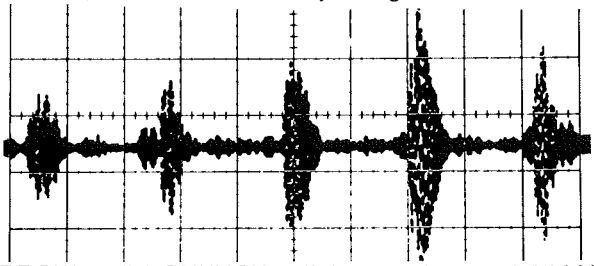

NARROW; FREQUENCY dial tuned to 3.35 kHz
Oscilloscope Vertical Sensitivity: 2.5 g/div

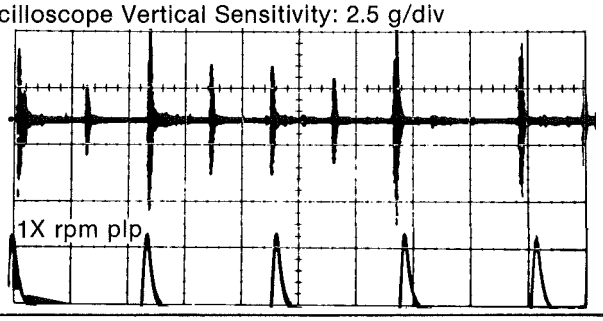

1770-6

Fig. 1-4. Equipment setup required for performing ball bearing vibration test.

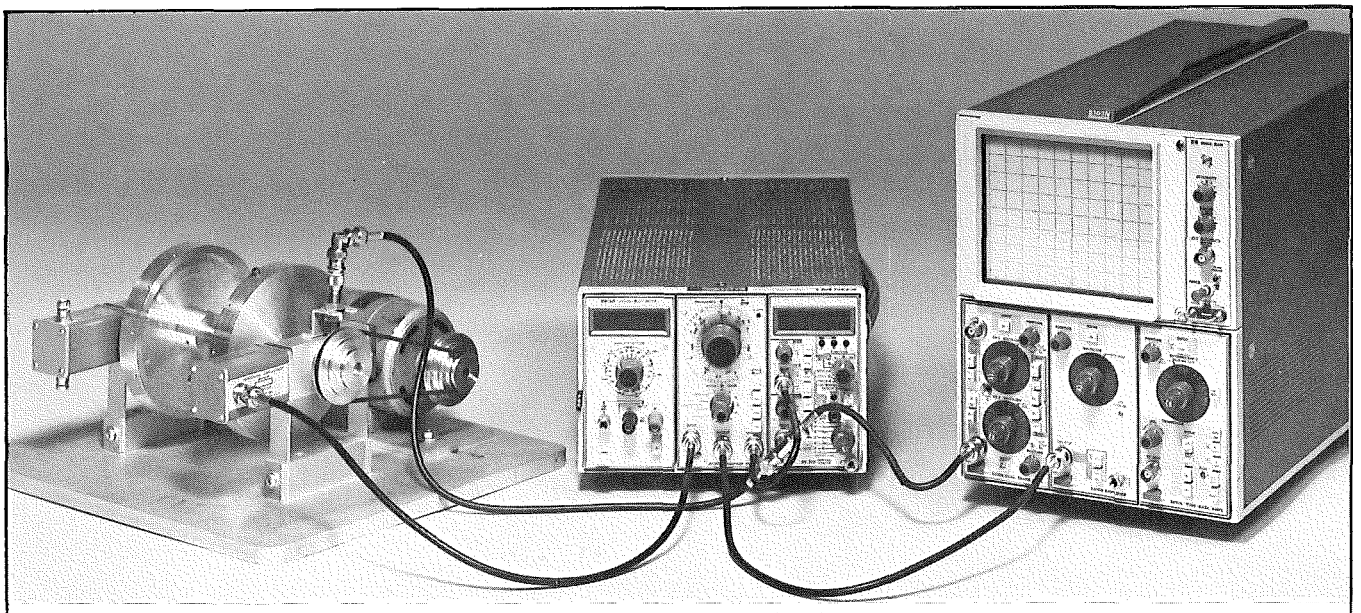

Instrumentation:

AF 501 Bandpass Filter installed in a TM 501-Series Power Module with DC 503 Universal Counter and DM 501 Digital Multimeter.

Unfiltered Vibration Pattern

5110 Oscilloscope with 5A18, 5A15 and 5B10 plug-ins.

Sweep Rate: ≈20 ms/div
Vertical Sensitivity: 0.1 mil (10^{-3} inch)/div

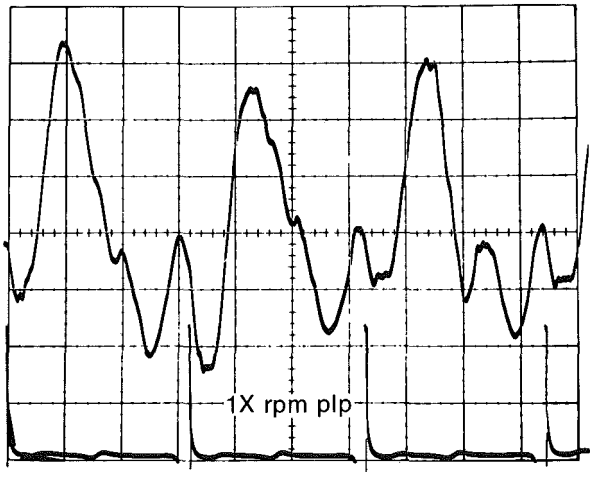

Balancing Demo

Horizontal Vibration Transducer, Tektronix Part No. 015-0167-00.

Electro-magnetic Pick-up, Tektronix Part No. 015-0119-00.

Filtered Vibration Pattern

AF 501 MODE switch set to BANDPASS FILTER, NARROW; FREQUENCY dial tuned to exactly 1 X rpm, 960 cpm (16 Hz)

Oscilloscope Sweep Rate: ≈20 ms/div
Vertical Sensitivity: 0.1 mil/div

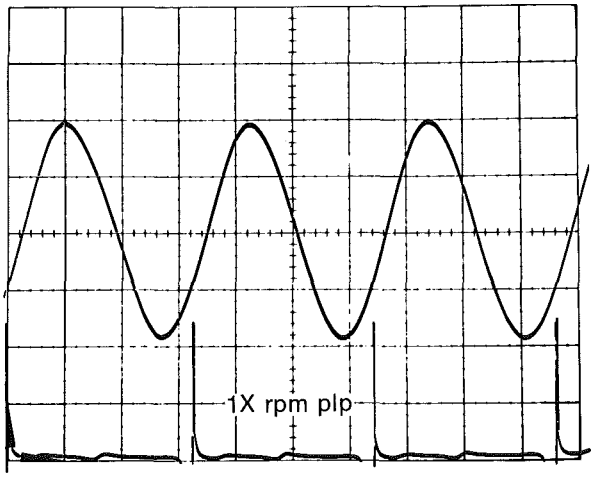

1770-7

Fig. 1-5. Equipment setup required for performing dynamic balancing test.

SPECIFICATION AND PERFORMANCE CHECK

SPECIFICATION

Performance Conditions

The electrical characteristics are valid only if the AF 501 has been calibrated at an ambient temperature between +20-degrees Celsius and +30-degree Celsius and is operating at an ambient temperature between 0-degree Celsius and +50-degree Celsius unless otherwise noted.

Items listed in the Performance Requirements column of the Electrical Characteristics are verified by completing the Performance Check in this manual. Items listed in the Supplemental Information column are not verified in this manual; they are either explanatory notes or performance characteristics for which no limits are specified.

Table 2-1

ELECTRICAL CHARACTERISTICS

Characteristics	Performance Requirements	Supplemental Information
	BANDPASS FILTER	
Frequency Range		3 Hz to 35 Hz In 4 decade steps Single knob tuning
Frequency Dial Error	<5% dial between 3—20 <10% dial between 20—30	
Frequency Multiplier		X1, X10, X100, X1k
Phase Shift		<10° at tuned frequency Below 5 kHz
Dial Readout		Hz, and cycles per minute (cpm)
Dial Range		3 to 40 Hz, 180—2400 cpm
Dial Rotation		360°, no stops
Knob Rotation		≈6 turns per one dial turn
Max. Filter Attenuation		>70 dB
Filter Selectivity		Q ≈ 5 (BROAD) Q ≈ 15 (NARROW)

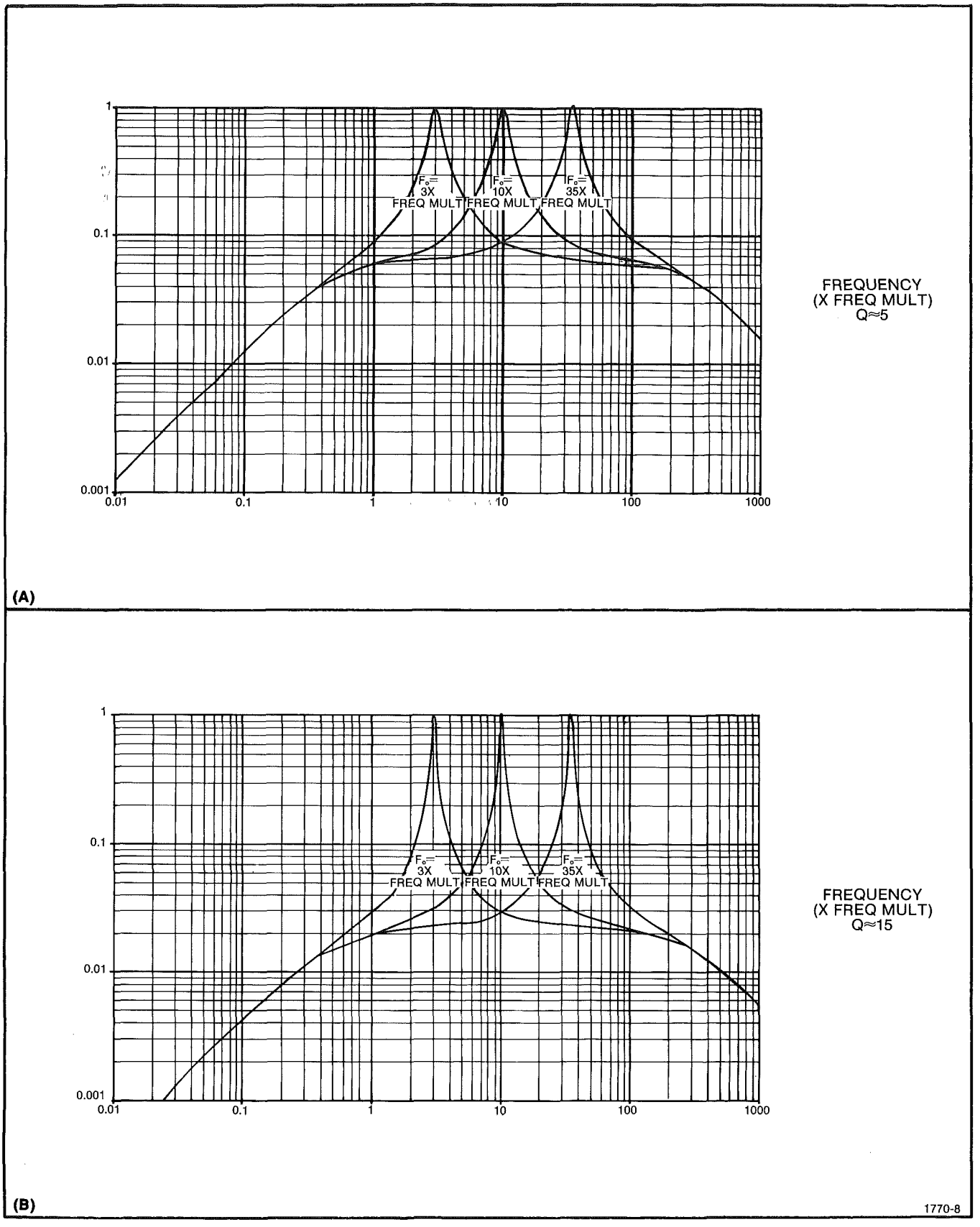

Fig. 2-1. Attenuation vs frequency (A) Q=5, (B) Q=15.

Table 2-1 (cont)

ELECTRICAL CHARACTERISTICS

Characteristics	Performance Requirements	Supplemental Information
Filter Roll-Off		See Fig. 2-1.
Gain Range		1—500, 1, 2, 5 Sequence
Gain Accuracy	±3 dB (BROAD) ±5 dB (NARROW)	
Input Impedance		≈1 MΩ paralleled by ≈47 pF
Max. Non-Destruct ac Input Voltage		130 volts rms
Max. Non-Destruct dc Input Voltage		±100 volts
Output Voltage	20 V p-p (product of output amplitude in volts and frequency in kHz not to exceed 400)	
Output Current		20 mA p-p max. (at 20 V p-p). See graph Fig. 2-2
Output Impedance		<1 Ω (with output voltage and current within limits of graph, Fig. 2-2).
	AMPLIFIER	
Single Ended		Ac coupled
Gain		1 to 500; 1, 2, 5 sequence
Gain Accuracy	±3%	
Bandwidth	<0.5 Hz to >50 kHz (at 3 dB point)	
Input Impedance		1 MΩ paralleled by ≈47 pF
Noise		<25 mV rms (referred to Output)
Max. Non-Destruct ac Input Voltage		130 volts rms
Max. Non-Destruct dc Input Voltage		±100 Volts
Output Voltage	20 V p-p (product of output amplitude in volts and frequency in kHz not to exceed 400)	
Output Current		20 mA p-p max. (at 20 V p-p). See Graph Fig. 2-2.
Output Impedance		<1 Ω (with output voltage and current within limits of graph, Fig. 2-2).

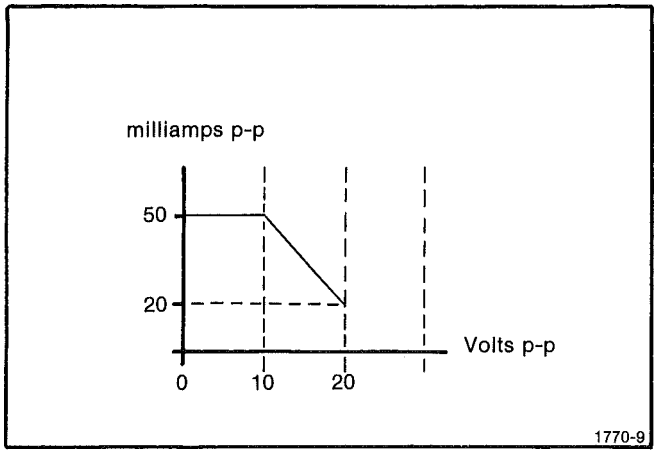

Fig. 2-2. Graph of output current vs volts.

Table 2-1 (cont)

ELECTRICAL CHARACTERISTICS

OSCILLATOR

Characteristics	Performance Requirements	Supplemental Information
Sine-Wave Output Range		3 Hz to 35 kHz
Dial Readout		Hz and cpm
Dial Range		3 to 40 Hz, 180—2400 cpm
Dial Rotation		360°, no stops
Knob Rotation		≈6 turns per one dial turn
Output Amplitude		1.2, or 5 V p-p ±20%. Depending on gain position.
Waveform Distortion		>3%
Output Current		Max. 50 mA p-p
Output Impedance		<1 Ω (within 50 mA output current limit).
TRIGGER OUT		
Trigger Out		Positive pulse, triggered when positive slope of output signal goes through 0 (used for counter, strobe-light, etc.).
Pulse Amplitude	>10 volts	
Pulse Duration	10 ±5 μs	
Minimum Signal Out Required To Set Trigger		500 mV, p-p
Rise and Fall Time		<1 μs
Output Impedance		≈50 Ω

Table 2-2 (cont)

ENVIRONMENTAL

Characteristic	Information
Temperature	
Operating	0° C to +50°
Storage	−40° C to +75° C
Altitude	
Operating	To 15,000 feet, maximum operating temperature decreased by 1° C/1000 feet from 5000 to 15000 feet.
Storage	To 50,000 feet
Vibration	
Operating and Non-Operating	With the instrument complete and operating, vibration frequency swept from 10 to 55 to 10 Hz at 1 minute per sweep. Vibrate 15 minutes in each of the three major axes at 0.015" total displacement. Hold 10 minutes at any major resonance, or if none, at 55 Hz. Total time, 75 minutes.
Shock	
Operating and Non-Operating	30 g's, 1/2 sine, 11 ms duration, 3 shocks in each direction along 3 major axes, for a total of 18 shocks.
Transporation	Qualified under National Safe Transit Committee Test Procedure 1A, Category II.

Table 2-3

PHYSICAL

Characteristic	Information
Overall Dimensions (measured at maximum points)	
Height	5.0 inches (12.7 cm)
Width	2.6 inches (6.6 cm)
Length	12.20 inches (31.0 cm)
Net Weight (Instrument only)	1 lb 13 oz (821 grams)

PERFORMANCE CHECK

Introduction

This procedure checks the electrical characteristics of the AF 501 that appear in the Specification section of this manual. If the instrument fails to meet the requirements given in this performance check, the adjustment procedure should be performed. This procedure can also be used by an incoming inspection facility to determine acceptability of performance.

The electrical characteristics in Section 2 are valid only if the AF 501 is calibrated at an ambient temperature of +20-degree Celsius to +30-degree Celsius and operated at an ambient temperature of 0-degree Celsius to +50-degree Celsius. Forced air circulation is required for ambient temperatures above +40-degrees Celsius.

Table 2-4

LIST OF TEST EQUIPMENT REQUIREMENTS

Description	Performance Requirements	Application	Example
Oscilloscope	Bandwidth, dc to 1 MHz; minimum deflection factor, 100 mV/div; sweep rate to at least 1 μs/div.	Used throughout procedure to provide display.	TEKTRONIX SC 501.[a]
Counter	Maximum frequency, 50 kHz; input sensitivity, 0.5 V; display accuracy, 1 count in 10^3.	Used for dial frequency check.	TEKTRONIX DC 501.[a]
Calibration Generator	Square-wave amplitude, 10 V, 1 V, and 0.1 V; amplitude accuracy, ±0.25%.	Used for amplifier gain check.	TEKTRONIX PG 506.[a]
Sine-wave Generator	Frequency range, 0.5 Hz to 50 Hz; voltage amplitude 20 V p-p (open circuit); accuracy ±3%.	Used throughout procedure to provide signal.	TEKTRONIX FG 503.[a]
Power module	Accepts TM 500-series plug-ins.	Used throughout procedure.	TEKTRONIX TM 504 or TM 506.
Coaxial cable (3 required)	Impedance, 50 Ω; length, 42 inches; connectors, bnc.	Used throughout procedure for signal connection.	Tektronix Part 012-0057-01.
RC normalizer	Time constant, 1 MΩ X 47 pF; connectors, bnc; attenuation 2X.	Used for input compensation check.	Tektronix Part 011-0059-02.

[a]**Requires TM 500-Series Power Module.**

Preliminary Procedure

1. Ensure that all test equipment and the AF 501 under test are suitably adapted to the line voltage to be applied. Refer to the installation section of the power module manual.

2. Ensure that all test equipment is suitably adapted to the applied line voltage.

3. Install the AF 501 into the power module, and if applicable, install the TM 500 series test equipment into the test equipment power module.

4. Connect the equipment under test and the test equipment to a suitable line voltage source. Turn all equipment on and allow at least 20 minutes for the equipment to stabilize.

Initial Control Settings

Set the following controls during warm-up time:

Oscilloscope

Intensity, Focus	set for well-defined trace and normal brightness
Vert Mode	left
Trig Source	vertical

Time Base Unit

Trig Source	left
Time/Div	1 ms
Variable	fully clockwise (cal)

Time Base Unit (cont)

Triggering	
Level/Slope	positive
Mode	vert
Coupling	ac
Source	int
Position	set so trace starts at left side of graticule
Magnifier	normal sweep

Vertical Amplifier

Volts/div	.2 V
Input	dc

Counter

Gate time	1 second
Display time	minimum
Trigger level	near zero setting
Trigger source external	

AF 501

MODE	OSCILLATOR
GAIN	1
FREQUENCY MULTIPLIER	X100
FREQUENCY Hz dial	20

PERFORMANCE CHECK PROCEDURE

1. Check Dial Accuracy. Dial accuracy is within 5% from 3 to 20; within 10% from 20 to 40.

a. Connect a 50 Ω cable from the AF 501 TRIG OUT connector to the counter input connector.

b. Check—dial settings and display using Table 2-5 as reference.

2. Check Frequency Multiplier Accuracy. Frequency Multiplier accuracy is within 5% from 3 to 20; within 10% from 20 to 40.

a. Check—multiplier settings and display using Table 2-6 as reference.

b. Disconnect the 50-ohm cable from the counter and AF 501 TRIG OUT connector.

3. Check Amplifier Gain Accuracy. Accuracy is within ±3% at given settings.

a. Connect a 50-Ω cable from the calibration generator amplitude output to the AF 501 connector.

b. Preset the following front-panel control settings:

AF 501 Bandpass Filter

MODE	AMPLIFIER
GAIN	1
FREQUENCY Hz	20
FREQUENCY MULTIPLIER	X1

Calibration Generator

Mode Switch	Standard Amplitude

Table 2-5

FREQUENCY DIAL ACCURACY

AF 501 FREQUENCY	AF 501 FREQ. MULT	Frequency	Maximum Error	Frequency Limit
3	X100	300 Hz	15 Hz	.285—315 kHz
5	X100	500 Hz	25 Hz	.475—.525 kHz
10	X100	1.0 kHz	50 Hz	.950—1.050 kHz
15	X100	1.5 kHz	75 Hz	1.425—1.575 kHz
20	X100	2.0 kHz	200 Hz	1.800—2.200 kHz
30	X100	3.0 kHz	300 Hz	2.700—3.300 kHz
40	X100	4.0 kHz	400 Hz	3.600—4.400 kHz

Table 2-6

FREQUENCY MULTIPLIER ACCURACY

Counter Gate Time	AF 501 FREQUENCY	AF 501 FREQ MULT	Frequency	Maximum Error	Frequency Limit
1 Sec	10	X1K	10 kHz	0.5 kHz	9.5—10.5 kHz
1 Sec	10	X100	1 kHz	.05 kHz	.95—1.05 kHz
1 Sec	10	X10	100 Hz	5 Hz	.095—.105 kHz
10 Sec	10	X1	10 Hz	0.5 Hz	.0095—.0105 kHz
10 Sec	30	X1	30 Hz	3 Hz	.027—.033 kHz
1 Sec	30	X10	300 Hz	30 Hz	.27—.33 kHz
1 Sec	30	X100	3 kHz	0.3 kHz	2.7—3.3 kHz
1 Sec	30	X1K	30 kHz	3 kHz	27—33 kHz

c. Set the time-base unit sweep rate for 1 ms/div.

d. Connect a 50 Ω cable from the AF 501 OUTPUT connector to the oscilloscope input connector.

e. Use Table 2-7 as reference to check the amplifier gain accuracy. The vertical amplifier deflection factor must be adjusted to maintain an appropriate display.

Table 2-7

AMPLIFIER GAIN ACCURACY

AF 501 GAIN switch setting	Calibration Generator amplitude switch setting	AF 501 Output peak-to-peak voltage
1	10 V	10 V
2	5 V	10 V
5	2 V	10 V
10	1 V	10 V
20	.5 V	10 V
50	.2 V	10 V
100	.1 V	10 V
200	50 mV	10 V
500	20 mV	10 V

f. Turn off the power module.

g. Disconnect the cable from the calibration generator amplitude output connector and remove the generator from the power module.

h. Install the sine-wave generator into the power module plug-in compartment.

i. Connect the 50 Ω cable from the AF 501 INPUT connector to the output connector of the sine-wave generator.

j. Set the AF 501 GAIN control to 1.

k. Turn on the power module and allow the required warmup time.

4. Check Amplifier Bandwidth. Bandwidth is less than 0.5 Hz to more than 50 kHz (at 3 dB point).

a. Connect a 50 Ω cable from the sine-wave generator trigger out connector to the counter input (the purpose of the counter is to monitor the sine-wave generator output frequency).

b. Set the time-base unit sweep rate for 5 ms/div and the triggering source switch to auto (sweep display will be present).

c. Set the sine-wave generator frequency for a 1 kHz output signal.

d. Set the sine-wave generator amplitude control and the oscilloscope controls to obtain a 5-division display on the oscilloscope. Do not disturb the sine-wave generator amplitude control or the oscilloscope amplitude control for the remainder of this step.

e. Set the sine-wave generator frequency control for a 0.5 Hz output signal. Change the time-base sweep rate to 2 s/div.

f. Check—amplitude of display signal is at least 3.5 divisions.

g. Set the sine-wave generator frequency control for a 50 kHz output signal. Change the time-base unit sweep rate to 1 ms/div.

h. Check—amplitude of display signal is at least 3.5 divisions.

i. Disconnect all cables.

5. Check Trigger Out. Amplitude is greater than 10 V; pulse duration, 10 μs ±5 μs; minimum signal out, 500 mV, peak-to-peak.

a. Preset the following front-panel control settings:

AF 501 Bandpass Filter

MODE	AMPLIFIER
GAIN	1

b. Set the vertical amplifier deflection factor for 5 V/div.

c. Set the time-base unit sweep rate for 10 μs/div.

d. Set the sine-wave generator frequency for a 0.5 V, 20 kHz output signal.

e. Connect a 50 Ω cable from the AF 501 TRIG OUT connector to the oscilloscope input connector.

f. Check—pulse amplitude is greater than 10 V.

g. Check—pulse duration is 5 μs to 15 μs.

h. Disconnect all cables.

6. Check Input Compensation.

a. Connect the 1 MΩ, 47 pF input normalizer to the AF 501 INPUT connector.

b. Connect a 50 Ω cable from the calibration generator output to the normalizer input.

c. Connect a 50 Ω cable from the AF 501 OUTPUT connector to the oscilloscope vertical amplifier input.

d. Set the calibration generator for a 1 V square-wave signal, the vertical amplifier deflection factor for 0.1 V/div, and the time-base unit to 1 ms/div.

e. Adjust the time-base unit triggering controls for a stable display.

f. Check—the displayed square-wave for a flat top, with minimum front corner roll-off or overshoot.

g. Disconnect all cables.

This completes the Performance Check procedure of the AF 501.

WARNING

THE FOLLOWING SERVICING INSTRUCTIONS ARE FOR USE BY QUALIFIED PERSONNEL ONLY. TO AVOID PERSONAL INJURY, DO NOT PERFORM ANY SERVICING OTHER THAN THAT CONTAINED IN OPERATING INSTRUCTIONS UNLESS YOU ARE QUALIFIED TO DO SO.

ADJUSTMENT

Introduction

This adjustment procedure is to be used to restore the AF 501 to original performance specifications. Adjustment need not be performed unless the instrument fails to meet the Performance Requirements of the Electrical Characteristics listed in the Specification section, or the Performance Check cannot be completed satisfactorily.

Completion of all adjustment steps in this procedure ensures that the instrument will meet the performance requirements listed in the Specification section. However, to fully ensure satisfactory performance, it is recommended that the Performance Check be performed after any adjustment is made.

Services Available

Tektronix, Inc. provides complete instrument repair and adjustment at local Field Service Centers and at the Factory Service Center. Contact your local Tektronix Field Office or representative for further information.

Test Equipment Required

The test equipment listed in Table 3-1, or equivalent, is required for adjustment of the AF 501. Specifications given for the test equipment are the minimum necessary for accurate adjustment and measurement. All test equipment is assumed to be correctly calibrated and operating within specification.

If other test equipment is substituted, control settings or calibration setup may be altered to meet the requirements of the equipment used.

A flexible plug-in extender, Tektronix Part No. 067-0645-02, is useful for troubleshooting or adjusting the AF 501; however, the complete Adjustment Procedure can be performed without use of the extender.

Table 3-1

LIST OF TEST EQUIPMENT REQUIREMENTS

Description	Performance Requirements	Application	Example
Digital voltmeter	Range, 0 to 50 V; accuracy within 0.1%.	Amplifier gain and distortion check.	TEKTRONIX DM 501.[a]
Oscilloscope	Bandwidth, dc to 100 kHz; deflection factor, 1 and 10 V/div.	Used throughout procedure to provide display.	TEKTRONIX SC 501.[a]
Counter	Maximum Frequency; 50 kHz; input sensitivity, 0.5 V; display accuracy, 1 count in 10^3.	Dial frequency check.	TEKTRONIX DC 501.[a]
Sine-wave Generator	Frequency range, 20 Hz to 50 kHz; voltage amplitude, 0.4 V to 10 V p-p; accuracy, ±3%.	Used throughout procedure to provide signal.	TEKTRONIX FG 501.[a]
Calibration Generator	Square-wave amplitude, 10 V, 1 V, and 0.1 V; amplitude accuracy, ±0.25%.	Used for amplifier gain check.	TEKTRONIX PG 506.[a]
Power Module	Accepts TM 500-series plug-ins.	Used throughout procedure to provide plug-in.	TEKTRONIX TM 503 or TM 504.
Coaxial cable (2 required)	Impedance, 50 Ω; length, 42 inches; connectors, bnc.	Provides signal connection throughout procedure.	Tektronix part 012-0057-01.
RC normalizer	Time constant, 1 MΩ X 47 pF; connectors, bnc; attenuation, 2X.	Check input compensation.	Tektronix part 011-0059-02.
Screwdriver	3-inch shaft, 3/32 inch bit.	Adjustments	Xcelite R3323.

[a]**Requires TM 500-Series Power Module.**

Preparation

a. Remove the left side cover of the AF 501 to gain access to the component side of the circuit board. Pull the rear end of the side cover outward from the side of the instrument (the cover snaps into place).

b. Install the AF 501 into the left power module compartment, or if appropriate, connect the AF 501 to the power module by means of the flexible plug-in extender.

c. Set the power module for the line voltage to be applied (see power module manual) and connect it to the line voltage source. Be sure that the power switch is off.

d. Install the TM 500-series equipment, including the AF 501 into the power module.

e. Connect all test equipment to a suitable line voltage source.

f. Turn on all test equipment and allow at least 20 minutes for the equipment to warm up and stabilize.

Initial Control Settings

Set the following controls during warm-up time:

Oscilloscope	
Intensity, Focus	set for well defined trace and normal brightness.
Vertical Mode	left
Trig Source	left
Time Base Unit	
Trig Source	vertical
Time/Div	1 ms
Variable	fully clockwise (cal)
Triggering	
Level/Slope	positive
Mode	left vert
Coupling	ac
Source	internal
Position	set so trace starts at left side of graticule.
Sweep Magnifier	normal sweep
Vertical Amplifier	
Volts/Div	.2 V
Input	dc
Counter	
Gate time	1 second
Display time	minimum
Trigger level	near zero setting
Trigger source	external

AF 501	
MODE	OSCILLATOR
GAIN	1
FREQUENCY MULTIPLIER	X100
FREQUENCY HZ dial	20

1. Adjust Dial Calibration Accuracy.

a. Connect a 50 Ω cable from the AF 501 TRIG OUT connector to the counter input connector.

b. CHECK—that the counter display indicates a frequency of 2 kHz, ±1%.

c. If the dial frequency is not correct, loosen the two set screws on the vernier drive coller behind the front panel.

d. Adjust—the dial slightly towards the correcting side of the dial error, and tighten only one set screw at this time. Position the AF 501 FREQUENCY dial to 20 and check that the counter display indicates a frequency of 2 kHz, ±1%.

e. Repeat part d of this step after loosening and tightening the set screw until the desired reading is obtained. Tighten the remaining set screw.

2. Check Frequency Dial Accuracy.

a. Check—dial settings and display using Table 3-2 as reference.

Table 3-2

FREQUENCY DIAL ACCURACY

AF 501 FREQUENCY	AF 501 FREQUENCY	Frequency	Maximum Error	Frequency Limit
3	X100	300 Hz	15 Hz	.285—315 kHz
5	X100	500 Hz	25 Hz	.475—.525 kHz
10	X100	1.0 kHz	50 Hz	.950—1.050 kHz
15	X100	1.5 kHz	75 Hz	1.425—1.575 kHz
20	X100	2.0 kHz	200 Hz	1.800—2.200 kHz
30	X100	3.0 kHz	300 Hz	2.700—3.300 kHz
40	X100	4.0 kHz	400 Hz	3.600—4.400 kHz

Table 3-3

FREQUENCY MULTIPLIER ACCURACY

Counter Gate Time	AF 501 FREQUENCY	AF 501 FREQ MULT	Frequency	Maximum Error	Frequency Limit
1 Sec	10	X1K	10 kHz	0.5 kHz	9.5—10.5 kHz
1 Sec	10	X100	1 kHz	.05 kHz	.95—1.05 kHz
1 Sec	10	X10	100 Hz	5 Hz	.095—.105 kHz
10 Sec	10	X1	10 Hz	0.5 Hz	.0095—.0105 kHz
10 Sec	30	X1	30 Hz	3 Hz	.027—.033 kHz
1 Sec	30	X10	300 Hz	30 Hz	.27—.33 kHz
1 Sec	30	X100	3 kHz	0.3 kHz	2.7—3.3 kHz
1 Sec	30	X1K	30 kHz	3 kHz	27—33 kHz

3. Check Frequency Multiplier Accuracy.

a. Check—multiplier settings and display using Table 3-3 as reference.

b. Disconnect the 50-ohm cable from the counter and AF 501 TRIG OUT connector.

4. Check Oscillator Output Amplitude.

a. Connect a 50 Ω cable from the AF 501 OUTPUT connector to the oscilloscope input connector. Set the AF 501 FREQUENCY dial to 20.

b. CHECK—the oscilloscope display for a vertical deflection of 1 V, ±20%.

c. Set the AF 501 GAIN switch to 2 and then 5, and check the oscilloscope display for vertical deflections of 2 V and 5 V, ±20%, respectfully.

5. Check Amplifier Gain Accuracy.

a. Connect a 50 Ω cable from the calibration generator amplitude output to the AF 501 INPUT connector.

b. Preset the following front-panel control settings:

AF 501 Bandpass Filter

MODE	AMPLIFIER
GAIN	1
FREQUENCY Hz	20
FREQUENCY MULTIPLIER	X1

Calibration Generator

Mode Switch	Standard amplitude

c. Set the time-base unit sweep rate for 1 ms/div.

d. Use the Table 3-4 as reference to check the amplifier gain accuracy. The vertical amplifier deflection factor must be adjusted to maintain an appropriate display.

Table 3-4
AMPLIFIER GAIN ACCURACY

AF 501 GAIN switch setting	Calibration Generator amplitude switch setting	AF 501 Output peak-to-peak voltage
1	10 V	10V ±3%
2	5 V	10 V ±3%
5	2 V	10 V ±3%
10	1 V	10 V ±3%
20	.5 V	10 V ±3%
50	.2 V	10 V ±3%
100	.1 V	10 V ±3%
200	50 mV	10 V ±3%
500	20 mV	10 V ±3%

e. Disconnect the 50 Ω cable from the calibration generator and AF 501 INPUT connector; disconnect the 50 ohm cable from the oscilloscope input connector.

6. Adjust Broad Bandpass Filter Gain.

a. Connect a 50 Ω cable from the sine-wave generator output connector to the oscilloscope vertical amplifier input.

b. Set the vertical amplifier unit deflection factor for 2 V/div.

c. Set the sine-wave generator amplitude control for a 10 V peak-to-peak, 20 Hz output signal (5-division display).

d. Disconnect the 50 ohm cable from the vertical amplifier unit input connector and connect it to the AF 501 INPUT connector; connect the 50 Ω cable from the AF 501 OUTPUT connector to the vertical amplifier unit input.

e. Set the time-base unit sweep rate to 10 ms/div, triggered internally.

f. Set the AF 501 MODE switch to BROAD, the GAIN switch to 1, and the FREQ MULT button to X1.

g. Adjust the AF 501 FREQUENCY Hz dial slowly (set near 20) for a maximum amplitude display.

h. Adjust—Lo Q, R146, for a 10 V peak-to-peak amplitude display on the oscilloscope. See Fig. 1-3 for adjustment location.

7. Adjust Narrow Bandpass Filter Gain.

a. Set the AF 501 MODE switch to NARROW.

b. Adjust the AF 501 FREQUENCY Hz dial slowly (set near 20) for a maximum amplitude display.

c. Adjust—Hi Q, R148, for a 10 V peak-to-peak amplitude display on the oscilloscope. See Fig. 3-1 for adjustment location.

8. Check/Select Bandpass Filter Compensation.

a. Set the AF 501 FREQ MULT pushbutton to the X10 position; the MODE switch should still be set to the NARROW position.

b. Set the sine-wave generator controls for a 10 V peak-to-peak, 200 Hz output signal (5-division display).

c. Adjust the AF 501 FREQUENCY Hz dial slowly (set near 20) for a maximum amplitude display.

d. Check—amplitude of the display signal is 10 V peak-to-peak, ±3 V (3.50 to 6.50 divisions).

NOTE

If display amplitude is above or below the specified tolerance level, capacitor values of the AF 501 FREQ MULT range switch will need changing. Two capacitors for each switch range are affected. Changing one capacitor value will decrease the amplitude; changing the other capacitor value will increase it. In general, only one switch range capacitor value should be changed to meet specification. Adding a selected capacitor in parallel, with a value of approximately 100 times the value of the existing switch range capacitor, will affect the amplitude about 15%. Refer to Table 3-4 and Fig. 3-1 for selection and location of the appropriate capacitors.

Table 3-5
CAPACITORS AFFECTING GAIN COMPENSATION

AF 501 FREQ MULT Range	Sine-wave Generator Frequency	Parallel Capacitor Circuit Number
X10	200 Hz	C173, C183
X100	2 kHz	C176, C186
X1K	20 kHz	C179, C189

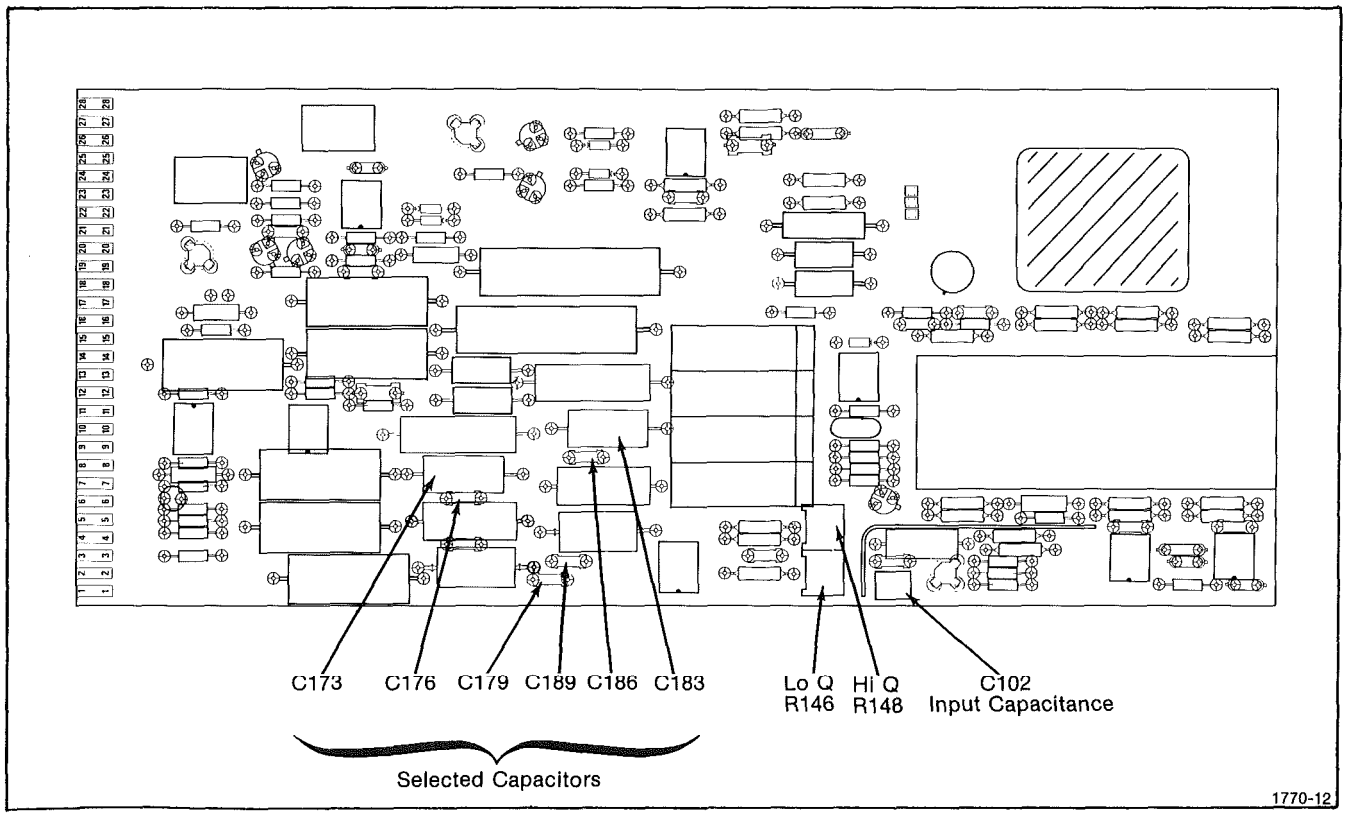

Fig. 3-1. Location of shunting capacitors, Lo Q, Hi Q, and input capacitance adjustments.

e. Repeat parts a through d of this step for the X100 and X1K range, with the sine-wave generator set to 2 kHz and 20 kHz, respectfully. Refer to Table 3-4.

f. Disconnect all cables.

9. Check Amplifier Bandwidth.

a. Preset the following front-panel control settings:

AF 501 Bandpass Filter

MODE	AMPLIFIER
GAIN	1

b. Connect a 50 Ω cable from the sine-wave generator trigger out connector to the counter input (the purpose of the counter is to monitor the sine-wave generator output frequency).

c. Set the time-base unit sweep rate for 5 ms/div and the triggering source switch to auto (sweep display will be present).

d. Set the sine-wave generator frequency for a 1 kHz output signal.

e. Set the sine-wave generator amplitude control and the oscilloscope controls to obtain a 5-division display on the oscilloscope. Do not disturb the sine-wave generator amplitude control or the oscilloscope amplitude control for the remainder of this step.

f. Set the sine-wave generator frequency control for a 0.5 Hz output signal. Change the time-base unit sweep rate to 2 s/div.

g. Check—amplitude of display signal is at least 3.5 divisions.

h. Set the sine-wave generator frequency control for a 50 kHz output signal. Change the time-base unit sweep rate to 1 ms/div.

i. Check—amplitude of display signal is at least 3.5 divisions.

j. Disconnect all cables.

10. Check Trigger Out

a. Set the vertical amplifier deflection factor for 5 V/div.

b. Set the time-base unit sweep rate for 10 μs/div.

c. Set the sine-wave generator frequency for a 0.5 V, 20 kHz output signal.

d. Connect a 50 Ω cable from the sine-wave generator output connector to the AF 501 INPUT connector.

e. Connect a 50 Ω cable from the AF 501 TRIG OUT connector to the oscilloscope input connector.

f. Check—pulse amplitude is greater than 10 V.

g. Check—pulse duration is 5 μs to 15 μs.

h. Disconnect all cables.

11. Adjust Input Compensation.

a. Connect the 1 MΩ, 47 pF input normalizer to the AF 501 INPUT connector.

b. Connect a 50 Ω cable from the calibration generator output to the normalizer input.

c. Connect a 50 Ω cable from the AF 501 OUTPUT connector to the oscilloscope vertical amplifier input.

d. Set the calibration generator for a 1 V square-wave signal, the vertical amplifier deflection factor for 0.1 V/div, and the time-base unit to 1 ms/div.

e. Adjust the time-base unit triggering controls for a stable display.

f. Adjust—C102, for best front corner and flat top of the displayed square wave. See Fig. 3-1 for adjustment location.

g. Disconnect all cables.

This completes the Adjustment procedure of the AF 501.

MAINTENANCE AND INTERFACING INFORMATION

Preventive Maintenance

There are no special preventive maintenance procedures that apply to the AF 501. Refer to the power module instruction manual for general preventive maintenance procedures and instructions.

Corrective Maintenance

Refer to the power module instruction manual for general corrective maintenance procedures and instructions.

Troubleshooting

Use the Performance Check, Adjustment Procedure, and Circuit Description as aids to locate trouble in the event of equipment failure. The test equipment listed in the Performance Check and Adjustment Procedure will prove useful in troubleshooting the AF 501.

Input, Output Connections

Make connections to the AF 501 Bandpass Filter plug-in unit through the front-panel bnc connectors, or the rear interface connector. The rear interface connections are illustrated in Fig. 4-1.

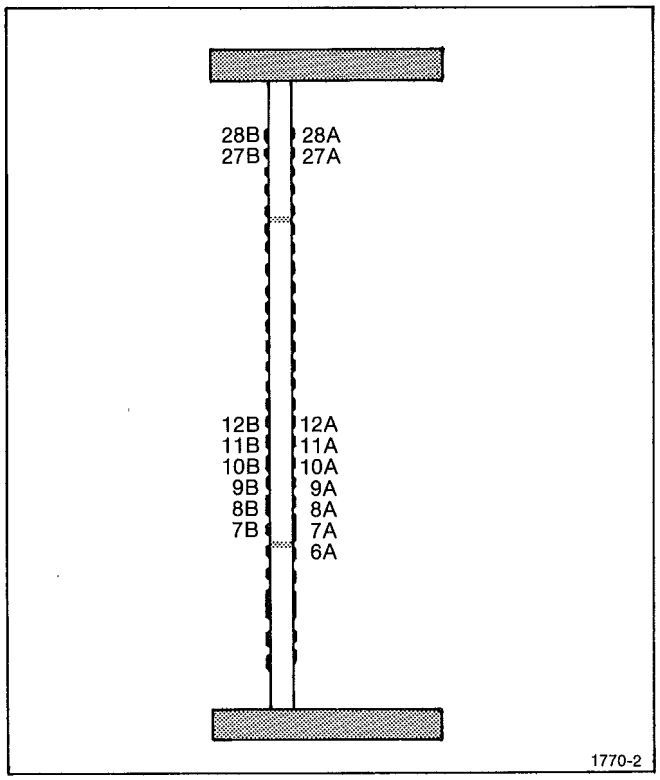

Fig. 4-1. Input/Output assignments at rear connector.

Functions Available at Rear Connector

A slot between pins 23 and 24 on the rear connector identifies the AF 501 as a member of the signal source family. Insert a barrier in the corresponding position of the power module jack to prevent other than signal source plug-ins from being used in that compartment. Consult the Building A System section of the power module manual for further information.

Signal outputs, or other specialized connections, may be made to the rear interface connectors as shown in Fig. 4-2. The instrument is not supplied with these connections. If you wish to wire them to the interface connector, consult your local Tektronix Field Office or representative for further information.

REMARKS	OUTPUT OR INPUT	PIN B		PIN A	OUTPUT OR INPUT	REMARKS
	Amplifier Output Ground	28*		*28	Amplifier Output	Switched by S210. In parallel with front-panel connector when switched in.
Switched by S310. In parallel with front-panel connector when switched in.	Trigger Output	27*		*27	Trigger Output Ground	
		26	Signal Source Barrier Slot	26		
		25		25		
		24		24		
		23		23		
		22		22		
		21		21		
		20		20		
		19		19		
		18		18		
		17		17		
		16		16		
		15		15		
		14		14		
	25 VAC winding	13		13	25 VAC winding	
	+33.5 V filtered DC	12*		*12	+33.5 V filtered DC	
	Collector lead of PNP Series-Pass	11*		*11	Base Lead of PNP Series-Pass	
	Transformer shield lead	10*		*10	Emitter lead of PNP Series-Pass	
	±33.5 V common return	9*		*9	±33.5 V common return	
	−33.5 V filtered DC	8*		*8	−33.5 V filtered DC	
	Collector Lead of NPN Series-Pass	7*	TM 500 Barrier Slot	*7	Emitter Lead of NPN Series-Pass	
	No connection	6		*6	Base lead of NPN Series-Pass	
	17.5 VAC winding	5		5	17.5 VAC winding	
	+11.5 V common return	4		4	+11.5 V common return	
	+11.5 V common return	3		3	+11.5 V common return	
	+11.5 V filtered DC	2	Rear-View of Plug-in	2	+11.5 V filtered DC	
	25 VAC winding	1		1	25 VAC winding	
		B		A		

Assignments listed for pins 1A — 13A and 1B — 13B are available in all power modules; however, only those pins marked with an asterisk (*) are used by the AF 501.

1770-10

Fig. 4-2. Input/Output assignments for plug-in rear interface connector contacts.

@

Two internal switches are provided to connect the front-panel signal source in parallel with the rear interface connector. When the Output switch is set to the Int position, pin 28A is paralleled with the front-panel OUTPUT connector. Likewise, when the Trig Out switch is set to the Int position, pin 27B is paralleled with the front-panel TRIG OUT connector. The internal switch locations are illustrated in Fig. 4-3.

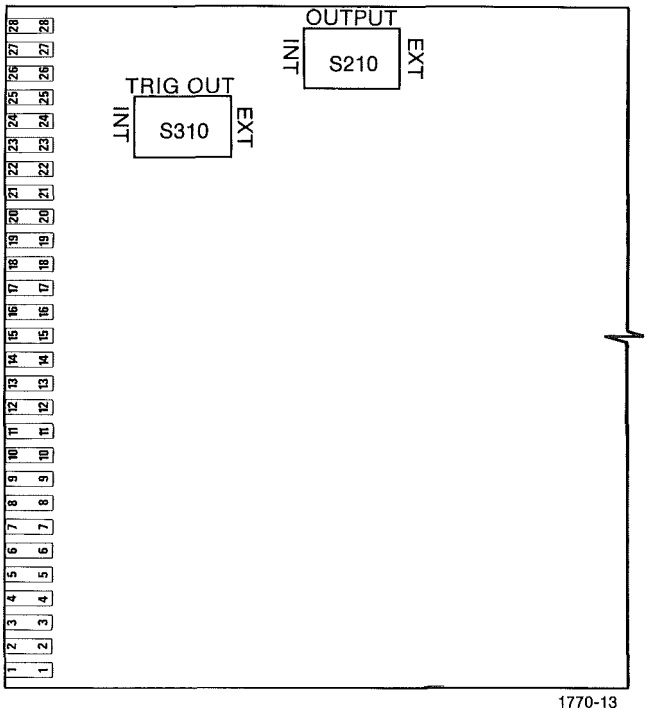

Fig. 4-3. Internal switch location.

REPACKAGING FOR SHIPMENT

If the Tektronix instrument is to be shipped to a Tektronix Service Center for service or repair, attach a tag showing owner (with address) and the name of an individual at your firm that can be contacted. Include complete instrument serial number and a description of the service required.

Save and re-use the package in which your instrument was shipped. If the original packaging is unfit for use or not available, repackage the instrument as follows:

Surround the instrument with polyethylene sheeting to protect the finish of the instrument. Obtain a carton of corrugated cardboard of the correct carton strength and having inside dimensions of no less than six inches more than the instrument dimensions. Cushion the instrument by tightly packing three inches of dunnage or urethane foam between carton and instrument, on all sides. Seal carton with shipping tape or industrial stapler.

The carton test strength for your instrument is 200 pounds.

CIRCUIT DESCRIPTION

Introduction

This section of the manual contains a description of the circuitry used in the AF 501 Bandpass Filter. Individual descriptions are separated into the following parts: General, Amplifier Mode, Bandpass Filter Mode, Oscillator Mode, and Power Supplies. Refer to the appropriate diagrams in the Diagrams section of this manual while reading the circuit description.

General

The AF 501 is a bandpass-filter, amplifier it has an effective Q of 5 in the BROAD position or 15 in the NARROW position. In both the BANDPASS FILTER and OSCILLATOR mode of operation, the tuning range is from 3 hertz to 35 kilohertz. As an ac-coupled, broadband amplifier the AF 501 ranges from 0.5 hertz to 50 kilohertz.

AMPLIFIER MODE

Input

The input impedance of the AF 501 is determined by the parallel network of R102-R104-C102-C100. C104 provides ac coupling into the input amplifier while CR110-CR112-R110 form an input protection circuit for U110. The input amplifier, U110, has a gain of 1X for GAIN switch settings (switch cam 6) of 50 or less and a 10X gain for GAIN switch settings of 100 and up. The output of U110 goes to a 0.1X voltage divider consisting of R118-R120-R122-R124 which is shorted out at GAIN switch settings above 10. The output of the voltage divider goes to the 10X amplifier.

10X Amplifier

The 10X amplifier consisting of U130 feeds its output to low pass filter goes through MODE switch cam 9 to the output circuitry.

Output

R202-C200 form a low pass filter to reject noise on the input signal to U200. The output of U200 goes to the output amplifier composed of Q201, Q220, R210, R220, CR210, and CR220. The output amplifier is part of the feedback loop for U200. The closed loop gain for the output circuitry is either 1X, 2X or 5X depending upon whether R206, or R206 and R207, or R206 and R208 has been selected by the GAIN switch cams 1 and 2.

Trigger Amplifier

The output amplifier signal is supplied to the positive input of comparator U290, where it is compared with ground. Diodes CR288 and CR290 provide input protection in the case of large signals. The output of U290 is coupled by C296 to a one-shot multivibrator consisting of Q298, Q302, and Q306. The output of the multivibrator is coupled via emitter follower Q306 to the TRIG OUT connector.

BANDPASS FILTER MODE

Input

The input circuitry is the same as described for the AMPLIFIER mode, except that the output of the voltage divider goes to the filters.

Filter

The R120-R122-R124 portion of the voltage divider forms a further voltage divider (determined by MODE switch cams 12 and 13) to compensate for the gain difference between the BANDPASS FILTER, NARROW and BANDPASS FILTER BROAD positions of the MODE switch. The gain of U140 is determined by the resistance of R139, R141, and the voltage divider resistance. C143, C145, and C147 in the feedback circuit of U140, cause frequencies above 10X the highest frequency of the selected range to be rolled-off. The output of U140 goes to bandpass filter Q determining networks R144-R148 (BANDPASS FILTER NARROW, Hi Q, MODE switch position, cam 15) and R142-R146 (BANDPASS FILTER BROAD, Lo Q, MODE switch position, cam 14).

R170A, R170B, C170, C172, C175, C178, C180, C182, C185, C188, R174, and R176 form a Wien bridge which is part of the feedback circuit of U150, Fig. 5-1. The Wien bridge is the frequency selective portion of the bandpass filter and its output (which is maximum at the tuned frequency) is used to provide positive feedback to U150. The output of U150 goes to the FREQ MULT switch S140 where a series capacitor (C198 in parallel with C195, or C192, or short) is selected. This capacitor, in conjunction with R200, forms a high pass filter. The high pass filter causes any frequency below 0.1X the lowest frequency of the selected range to be rolled off.

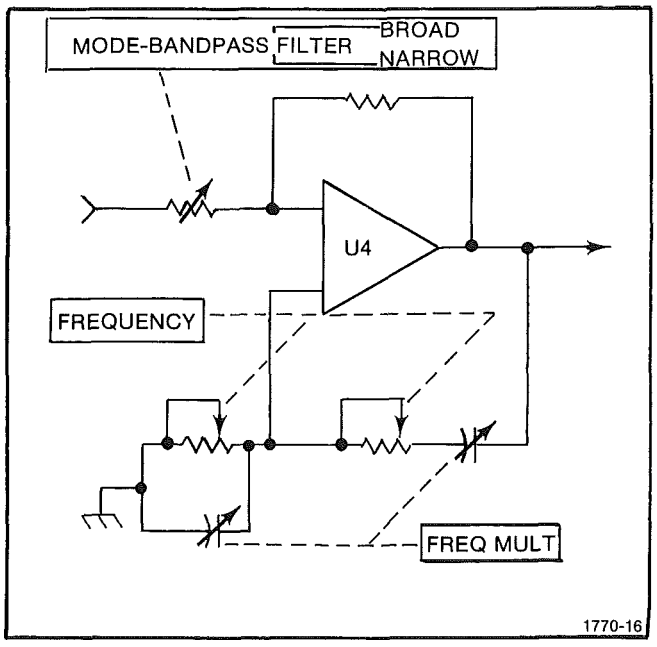

Fig. 5-1. Simplified diagram of Wien bridge feedback circuit.

Output and Trigger Amplifier

The output and trigger amplifier circuitry is the same as described for the AMPLIFIER mode.

OSCILLATOR MODE

Oscillator

The output of U150 is rectified by CR160 and filtered by C160-R160 then supplied to U160. The output of U160 controls the gate voltage of field effect transistor (fet) Q168. Q168 is used as a voltage variable resistance to control (via MODE switch cam 16) the loop gain of the Wien bridge amplifier. The effect of the feedback loop is to maintain a constant amplitude sine-wave at the output of U150. The output of U150 is supplied to the output circuitry via voltage divider R194-R196 and MODE switch cam 11.

Output and Trigger Amplifier

The output and trigger amplifier circuitry is the same as described for the AMPLIFIER mode.

POWER SUPPLIES

+15 Volt Supply

The +15 volt supply is derived from the +33 volt supply of the TM 500-Series Power Module. The reference consists of zener diode VR254, operational amplifier U258 and the emitter-follower transistor which is located in the TM 500-Series Power Module. The operational amplifier has a unity gain. The output voltage is established by comparing the voltage at the negative input of U258 with the reference voltage at the positive input, which is established by VR254. Any differences between the two inputs of U258 will cause a change in its output so as to correct for the output error.

−15 Volt Supply

The −15 volt and +15 volt supplies are similar in operation.

−3.0 Volt Supply

The −3.0 volt supply is derived from the −33 volt supply. The supply consists of voltage dropping resistor R272 and zener diode VR272.

OPTIONS

(No options are available at this time)

REPLACEABLE ELECTRICAL PARTS

PARTS ORDERING INFORMATION

Replacement parts are available from or through your local Tektronix, Inc. Field Office or representative.

Changes to Tektronix instruments are sometimes made to accommodate improved components as they become available, and to give you the benefit of the latest circuit improvements developed in our engineering department. It is therefore important, when ordering parts, to include the following information in your order: Part number, instrument type or number, serial number, and modification number if applicable.

If a part you have ordered has been replaced with a new or improved part, your local Tektronix, Inc. Field Office or representative will contact you concerning any change in part number.

Change information, if any, is located at the rear of this manual.

SPECIAL NOTES AND SYMBOLS

X000	Part first added at this serial number
00X	Part removed after this serial number

ITEM NAME

In the Parts List, an Item Name is separated from the description by a colon (:). Because of space limitations, an Item Name may sometimes appear as incomplete. For further Item Name identification, the U.S. Federal Cataloging Handbook H6-1 can be utilized where possible.

ABBREVIATIONS

ACTR	ACTUATOR	PLSTC	PLASTIC
ASSY	ASSEMBLY	QTZ	QUARTZ
CAP	CAPACITOR	RECP	RECEPTACLE
CER	CERAMIC	RES	RESISTOR
CKT	CIRCUIT	RF	RADIO FREQUENCY
COMP	COMPOSITION	SEL	SELECTED
CONN	CONNECTOR	SEMICOND	SEMICONDUCTOR
ELCTLT	ELECTROLYTIC	SENS	SENSITIVE
ELEC	ELECTRICAL	VAR	VARIABLE
INCAND	INCANDESCENT	WW	WIREWOUND
LED	LIGHT EMITTING DIODE	XFMR	TRANSFORMER
NONWIR	NON WIREWOUND	XTAL	CRYSTAL

CROSS INDEX—MFR. CODE NUMBER TO MANUFACTURER

Mfr. Code	Manufacturer	Address	City, State, Zip
01002	GENERAL ELECTRIC COMPANY, INDUSTRIAL AND POWER CAPACITOR PRODUCTS DEPARTMENT	JOHN STREET	HUDSON FALLS, NY 12839
01121	ALLEN-BRADLEY COMPANY	1201 2ND STREET SOUTH	MILWAUKEE, WI 53204
01295	TEXAS INSTRUMENTS, INC., SEMICONDUCTOR GROUP	P O BOX 5012, 13500 N CENTRAL EXPRESSWAY	DALLAS, TX 75222
02111	SPECTROL ELECTRONICS CORPORATION	17070 EAST GALE AVENUE	CITY OF INDUSTRY, CA 91745
03508	GENERAL ELECTRIC COMPANY, SEMI-CONDUCTOR PRODUCTS DEPARTMENT	ELECTRONICS PARK	SYRACUSE, NY 13201
04222	AVX CERAMICS, DIVISION OF AVX CORP.	P O BOX 867, 19TH AVE. SOUTH	MURTLE BEACH, SC 29577
05091	TRI-ORDINATE CORPORATION	343 SNYDER AVENUE	BERKELEY HEIGHTS, NJ 07922
05397	UNION CARBIDE CORPORATION, MATERIALS SYSTEMS DIVISION	11901 MADISON AVENUE	CLEVELAND, OH 44101
07910	TELEDYNE SEMICONDUCTOR	12515 CHADRON AVE.	HAWTHORNE, CA 90250
14752	ELECTRO CUBE INC.	1710 S. DEL MAR AVE.	SAN GABRIEL, CA 91776
18324	SIGNETICS CORP.	811 E. ARQUES	SUNNYVALE, CA 94086
19396	IILINOIS TOOL WORKS, INC. PAKTRON DIV.	900 FOLLIN LANE, SE	VIENNA, VA 22180
32997	BOURNS, INC., TRIMPOT PRODUCTS DIV.	1200 COLUMBIA AVE.	RIVERSIDE, CA 92507
34371	HARRIS SEMICONDUCTOR, DIV. OF HARRIS CORPORATION	P. O. BOX 883	MELBOURNE, FL 32901
34553	AMPEREX ELECTRONIC CORP., COMPONENT DIV.	35 HOFFMAN AVE.	HAPPAUGE, NY 11787
56289	SPRAGUE ELECTRIC CO.		NORTH ADAMS, MA 01247
71744	CHICAGO MINIATURE LAMP WORKS	4433 RAVENSWOOD AVE.	CHICAGO, IL 60640
72982	ERIE TECHNOLOGICAL PRODUCTS, INC.	644 W. 12TH ST.	ERIE, PA 16512
80009	TEKTRONIX, INC.	P O BOX 500	BEAVERTON, OR 97077
81483	INTERNATIONAL RECTIFIER CORP.	9220 SUNSET BLVD.	LOS ANGELES, CA 90069
91637	DALE ELECTRONICS, INC.	P. O. BOX 609	COLUMBUS, NE 68601

Ckt No.	Tektronix Part No.	Serial/Model No. Eff	Dscont	Name & Description	Mfr Code	Mfr Part Number
A1	670-3628-00	B010100	B021029	CKT BOARD ASSY:MAIN	80009	670-3628-00
A1	670-3628-01	B021030		CKT BOARD ASSY:MAIN	80009	670-3628-01
C100	281-0504-00			CAP.,FXD,CER DI:10PF,+/-1PF,500V	72982	301-055C0G0100F
C102	281-0184-00			CAP.,VAR,PLSTC:2-18PF,500VDC	34553	2222-809-05003
C104	285-0919-00			CAP.,FXD,PLSTC:0.22UF,10%,100V	56289	LP66A1B224K002
C111	283-0111-00			CAP.,FXD,CER DI:0.1UF,20%,50V	72982	8121-N088Z5U104M
C112	283-0111-00			CAP.,FXD,CER DI:0.1UF,20%,50V	72982	8121-N088Z5U104M
C114	281-0513-00			CAP.,FXD,CER DI:27PF,+/-5.4PF,500V	72982	301-000P2G0270M
C130	283-0177-00			CAP.,FXD,CER DI:1UF,+80-20%,25V	72982	8131N039 E 105Z
C134	281-0592-00			CAP.,FXD,CER DI:4.7PF,+/-0.5PF,500V	72982	301-023C0H0479D
C138	285-0626-00			CAP.,FXD,PLSTC:0.0015UF,10%,100V	56289	410P102
C140	281-0513-00			CAP.,FXD,CER DI:27PF,+/-5.4PF,500V	72982	301-000P2G0270M
C143	285-0566-00			CAP.,FXD,PLSTC:0.022UF,10%,200V	56289	410P22392
C145	285-0543-00			CAP.,FXD,PLSTC:0.0022UF,20%,400V	56289	417P22204
C147	281-0605-00			CAP.,FXD,CER DI:200PF,10%,500V	04222	7001-1375
C150	281-0511-00			CAP.,FXD,CER DI:22PF,+/-2.2PF,500V	72982	301-000C0G0220K
C152	281-0513-00			CAP.,FXD,CER DI:27PF,+/-5.4PF,500V	72982	301-000P2G0270M
C160	290-0529-00			CAP.,FXD,ELCTLT:47UF,20%,20V	05397	T368C476M020AZ
C170	285-1068-00			CAP.,FXD,PLSTC:5UF,1%,200V	14752	230B1C505F
C172	285-1067-00			CAP.,FXD,PLSTC:0.5UF,1%,200V	14752	230B1C504F
C173	----- -----			TEST SELECTED		
C175	285-1066-00			CAP.,FXD,PLSTC:0.05UF,1%,200V	14752	230B1C503F
C176	----- -----			TEST SELECTED		
C178	285-1062-00			CAP.,FXD,PLSTC:0.005UF,0.1%,200V	19396	502F02PP460
C179	----- -----			TEST SELECTED		
C180	285-1068-00			CAP.,FXD,PLSTC:5UF,1%,200V	14752	230B1C505F
C182	285-1067-00			CAP.,FXD,PLSTC:0.5UF,1%,200V	14752	230B1C504F
C183	----- -----			TEST SELECTED		
C185	285-1066-00			CAP.,FXD,PLSTC:0.05UF,1%,200V	14752	230B1C503F
C186	----- -----			TEST SELECTED		
C188	285-1062-00			CAP.,FXD,PLSTC:0.005UF,0.1%,200V	19396	502F02PP460
C189	----- -----			TEST SELECTED		
C192	285-0622-00			CAP.,FXD,PLSTC:0.1UF,20%,100V	56289	410P10401
C195	285-0598-00			CAP.,FXD,PLSTC:0.01UF,5%,100V	01002	61F10AC103
C198	285-0862-00			CAP.,FXD,PLSTC:0.001,10%,100V	56289	410P10291
C200	281-0511-00			CAP.,FXD,CER DI:22PF,+/-2.2PF,500V	72982	301-000C0G0220K
C202	283-0177-00			CAP.,FXD,CER DI:1UF,+80-20%,25V	72982	8131N039 E 105Z
C204	281-0523-00			CAP.,FXD,CER DI:100PF,+/-20PF,500V	72982	301-000U2M0101M
C250	290-0117-00			CAP.,FXD,ELCTLT:50UF,+75-10%,50V	56289	30D506G050DD9
C254	290-0525-00			CAP.,FXD,ELCTLT:4.7UF,20%,50V	56289	196D475X0050KA1
C256	290-0117-00			CAP.,FXD,ELCTLT:50UF,+75-10%,50V	56289	30D506G050DD9
C258	290-0117-00			CAP.,FXD,ELCTLT:50UF,+75-10%,50V	56289	30D506G050DD9
C270	290-0117-00			CAP.,FXD,ELCTLT:50UF,+75-10%,50V	56289	30D506G050DD9
C274	290-0525-00			CAP.,FXD,ELCTLT:4.7UF,20%,50V	56289	196D475X0050KA1
C276	290-0117-00			CAP.,FXD,ELCTLT:50UF,+75-10%,50V	56289	30D506G050DD9
C278	290-0117-00			CAP.,FXD,ELCTLT:50UF,+75-10%,50V	56289	30D506G050DD9
C290	283-0111-00			CAP.,FXD,CER DI:0.1UF,20%,50V	72982	8121-N088Z5U104M
C292	283-0111-00			CAP.,FXD,CER DI:0.1UF,20%,50V	72982	8121-N088Z5U104M
C294	285-0627-00			CAP.,FXD,PLSTC:0.0033UF,5%,100V	56289	410P33251
C296	281-0546-00			CAP.,FXD,CER DI:330PF,10%,500V	04222	7001-1380
C298	281-0550-00			CAP.,FXD,CER DI:120PF,10%,500V	04222	7001-1373
CR110	152-0246-00			SEMICOND DEVICE:SILICON,400PIV,200MA	80009	152-0246-00

Ckt No.	Tektronix Part No.	Serial/Model No. Eff	Dscont	Name & Description	Mfr Code	Mfr Part Number
CR112	152-0246-00			SEMICOND DEVICE:SILICON,400PIV,200MA	80009	152-0246-00
CR160	152-0141-02			SEMICOND DEVICE:SILICON,30V,150MA	07910	1N4152
CR210	152-0141-02			SEMICOND DEVICE:SILICON,30V,150MA	07910	1N4152
CR220	152-0141-02			SEMICOND DEVICE:SILICON,30V,150MA	07910	1N4152
CR288	152-0141-02			SEMICOND DEVICE:SILICON,30V,150MA	07910	1N4152
CR290	152-0141-02			SEMICOND DEVICE:SILICON,30V,150MA	07910	1N4152
DS252	150-0109-00			LAMP,INCAND:18V,26MA	71744	CM7220
J100	131-0955-00			CONNECTOR,RCPT,:BNC,FEMALE,W/HARDWARE	05091	31-279
J220	131-0955-00			CONNECTOR,RCPT,:BNC,FEMALE,W/HARDWARE	05091	31-279
J310	131-0955-00			CONNECTOR,RCPT,:BNC,FEMALE,W/HARDWARE	05091	31-279
Q168	151-1022-00			TRANSISTOR:SILICON,JFE,SEL FROM 2N4392	80009	151-1022-00
Q210	151-0190-00			TRANSISTOR:SILICON,NPN	80009	151-0190-00
Q220	151-0188-00			TRANSISTOR:SILICON,PNP	01295	2N3906
Q298	151-0190-00			TRANSISTOR:SILICON,NPN	80009	151-0190-00
Q302	151-0281-00			TRANSISTOR:SILICON,NPN	03508	X16P4039
Q306	151-0190-00			TRANSISTOR:SILICON,NPN	80009	151-0190-00
R102	321-0510-00			RES.,FXD,FILM:2M OHM,1%,0.125W	91637	HFF188G20003F
R104	321-0510-00			RES.,FXD,FILM:2M OHM,1%,0.125W	91637	HFF188G20003F
R110	315-0563-00			RES.,FXD,CMPSN:56K OHM,5%,0.25W	01121	CB5635
R114	321-0285-00			RES.,FXD,FILM:9.09K OHM,1%,0.125W	91637	MFF1816G90900F
R115	321-0193-00			RES.,FXD,FILM:1K OHM,1%,0.125W	91637	MFF1816G10000F
R118	321-0318-00			RES.,FXD,FILM:20K OHM,1%,0.125W	91637	MFF1816G20001F
R120	321-0207-00			RES.,FXD,FILM:1.4K OHM,1%,0.125W	91637	MFF1816G14000F
R122	321-0170-00			RES.,FXD,FILM:576 OHM,1%,0.125W	91637	MFF1816G576R0F
R124	321-0136-00			RES.,FXD,FILM:255 OHM,1%,0.125W	91637	MFF1816G255R0F
R130	315-0105-00			RES.,FXD,CMPSN:1M OHM,5%,0.25W	01121	CB1055
R132	321-0289-00			RES.,FXD,FILM:10K OHM,1%,0.125W	91637	MFF1816G10001F
R134	321-0381-00			RES.,FXD,FILM:90.9K OHM,1%,0.125W	91637	MFF1816G90901F
R138	315-0102-00			RES.,FXD,CMPSN:1K OHM,5%,0.25W	01121	CB1025
R139	321-0197-00			RES.,FXD,FILM:1.1K OHM,1%,0.125W	91637	MFF1816G11000F
R140	321-0335-00			RES.,FXD,FILM:30.1K OHM,1%,0.125W	91637	MFF1816G30101F
R141	321-0333-00			RES.,FXD,FILM:28.7K OHM,1%,0.125W	91637	MFF1816G28701F
R142	321-0202-00			RES.,FXD,FILM:1.24K OHM,1%,0.125W	91637	MFF1816G12400F
R144	321-0199-00			RES.,FXD,FILM:1.15K OHM,1%,0.125W	91637	MFF1816G11500F
R146	311-1221-00			RES.,VAR,NONWIR:50 OHM,20%,0.50W	32997	3386F-T04-500
R148	311-1221-00			RES.,VAR,NONWIR:50 OHM,20%,0.50W	32997	3386F-T04-500
R150	321-0227-00			RES.,FXD,FILM:2.26K OHM,1%,0.125W	91637	MFF1816G22600F
R158	315-0512-00			RES.,FXD,CMPSN:5.1K OHM,5%,0.25W	01121	CB5125
R160	315-0363-00			RES.,FXD,CMPSN:36K OHM,5%,0.25W	01121	CB3635
R162	315-0104-00			RES.,FXD,CMPSN:100K OHM,5%,0.25W	01121	CB1045
R164	315-0512-00			RES.,FXD,CMPSN:5.1K OHM,5%,0.25W	01121	CB5125
R166	315-0184-00			RES.,FXD,CMPSN:180K OHM,5%,0.25W	01121	CB1845
R168	315-0102-00			RES.,FXD,CMPSN:1K OHM,5%,0.25W	01121	CB1025
R170A,B	311-1752-00			RES.,VAR,NONWIR:2 X 10K OHM,3%,2.75W	02111	100-1313
R174	321-0729-06			RES.,FXD,FILM:786 OHM,0.25%,0.125W	91637	MFF1816C786R0C
R176	321-0729-06			RES.,FXD,FILM:786 OHM,0.25%,0.125W	91637	MFF1816C786R0C
R194	315-0152-00			RES.,FXD,CMPSN:1.5K OHM,5%,0.25W	01121	CB1525
R196	315-0621-00			RES.,FXD,CMPSN:620 OHM,5%,0.25W	01121	CB6215
R200	321-0481-00			RES.,FXD,FILM:1M OHM,1%,0.125W	91637	MFF1816G10003F
R202	321-0356-00			RES.,FXD,FILM:49.9K OHM,1%,0.125W	91637	MFF1816G49901F
R204	321-0193-00			RES.,FXD,FILM:1K OHM,1%,0.125W	91637	MFF1816G10000F

Ckt No.	Tektronix Part No.	Serial/Model No. Eff	Dscont	Name & Description	Mfr Code	Mfr Part Number
R206	321-0318-00			RES.,FXD,FILM:20K OHM,1%,0.125W	91637	MFF1816G20001F
R207	321-0191-00			RES.,FXD,FILM:953 OHM,1%,0.125W	91637	MFF1816G953R0F
R208	321-0133-00			RES.,FXD,FILM:237 OHM,1%,0.125W	91637	MFF1816G237R0F
R210	315-0183-00			RES.,FXD,CMPSN:18K OHM,5%,0.25W	01121	CB1835
R215	315-0101-00			RES.,FXD,CMPSN:100 OHM,5%,0.25W	01121	CB1015
R220	315-0183-00			RES.,FXD,CMPSN:18K OHM,5%,0.25W	01121	CB1835
R250	308-0231-00			RES.,FXD,WW:220 OHM,5%,3W	91637	RS2B-B220R0J
R252	301-0561-00	B010100	B021029	RES.,FXD,CMPSN:560 OHM,5%,0.50W	01121	EB5615
R252	301-0751-00	B021030		RES.,FXD,CMPSN:750 OHM,5%,0.50W	01121	EB7515
R254	315-0182-00			RES.,FXD,CMPSN:1.8K OHM,5%,0.25W	01121	CB1825
R256	315-0202-00			RES.,FXD,CMPSN:2K OHM,5%,0.25W	01121	CB2025
R258	315-0201-00			RES.,FXD,CMPSN:200 OHM,5%,0.25W	01121	CB2015
R270	315-0221-00			RES.,FXD,CMPSN:220 OHM,5%,0.25W	01121	CB2215
R272	301-0272-00			RES.,FXD,CMPSN:2.7K OHM,5%,0.50W	01121	EB2725
R274	315-0182-00			RES.,FXD,CMPSN:1.8K OHM,5%,0.25W	01121	CB1825
R276	315-0202-00			RES.,FXD,CMPSN:2K OHM,5%,0.25W	01121	CB2025
R278	315-0201-00			RES.,FXD,CMPSN:200 OHM,5%,0.25W	01121	CB2015
R288	315-0222-00			RES.,FXD,CMPSN:2.2K OHM,5%,0.25W	01121	CB2225
R290	315-0104-00			RES.,FXD,CMPSN:100K OHM,5%,0.25W	01121	CB1045
R291	315-0751-00			RES.,FXD,CMPSN:750 OHM,5%,0.25W	01121	CB7515
R294	315-0361-00			RES.,FXD,CMPSN:360 OHM,5%,0.25W	01121	CB3615
R296	315-0104-00			RES.,FXD,CMPSN:100K OHM,5%,0.25W	01121	CB1045
R298	315-0472-00			RES.,FXD,CMPSN:4.7K OHM,5%,0.25W	01121	CB4725
R300	315-0154-00			RES.,FXD,CMPSN:150K OHM,5%,0.25W	01121	CB1545
R302	315-0472-00			RES.,FXD,CMPSN:4.7K OHM,5%,0.25W	01121	CB4725
R308	315-0152-00			RES.,FXD,CMPSN:1.5K OHM,5%,0.25W	01121	CB1525
S110A,B	263-1097-00			ACTR,ASSY,CAM S:MODE RANGE	80009	263-1097-00
S140	260-1711-00			SWITCH,PUSH:FREQ MULT	80009	260-1711-00
S210	260-0723-01			SWITCH,SLIDE:	80009	260-0723-01
S310	260-0723-01			SWITCH,SLIDE:	80009	260-0723-01
U110	156-0200-00			MICROCIRCUIT,LI:LOW INPUT/OFFSET CURRENT	80009	156-0200-00
U130	156-0200-00			MICROCIRCUIT,LI:LOW INPUT/OFFSET CURRENT	80009	156-0200-00
U140	156-0200-00			MICROCIRCUIT,LI:LOW INPUT/OFFSET CURRENT	80009	156-0200-00
U150	156-0317-00			MICROCIRCUIT,LI:OPERATIONAL AMPLIFLIER	34371	HA2-2625-5
U160	156-0067-00			MICROCIRCUIT,LI:OPERATIONAL AMPLIFIER	80009	156-0067-00
U200	156-0200-00			MICROCIRCUIT,LI:LOW INPUT/OFFSET CURRENT	80009	156-0200-00
U258	156-0067-00			MICROCIRCUIT,LI:OPERATIONAL AMPLIFIER	80009	156-0067-00
U278	156-0067-00			MICROCIRCUIT,LI:OPERATIONAL AMPLIFIER	80009	156-0067-00
U290	156-0134-00			MICROCIRCUIT,LI:LIN DIFF COMP, 0 DEG-75 DEG C	18324	N5710
VR254	152-0243-00			SEMICOND DEVICE:ZENER,0.4W,15V,5%	81483	1N965B
VR272	152-0278-00			SEMICOND DEVICE:ZENER,0.4W,3V,5%	07910	1N4372A
VR274	152-0243-00			SEMICOND DEVICE:ZENER,0.4W,15V,5%	81483	1N965B

DIAGRAMS AND CIRCUIT BOARD ILLUSTRATIONS

Symbols and Reference Designators

Electrical components shown on the diagrams are in the following units unless noted otherwise:

Capacitors = Values one or greater are in picofarads (pF).
Values less than one are in microfarads (μF).
Resistors = Ohms (Ω).

Graphic symbols and class designation letters are based on ANSI Standard Y32.2-1975.

Logic symbology is based on ANSI Y32.14-1973 in terms of positive logic. Logic symbols depict the logic function performed and may differ from the manufacturer's data.

The overline on a signal name indicates that the signal performs its intended function when it goes to the low state.

Abbreviations are based on ANSI Y1.1-1972.

Other ANSI standards that are used in the preparation of diagrams by Tektronix, Inc. are:

Y14.15, 1966	Drafting Practices.
Y14.2, 1973	Line Conventions and Lettering.
Y10.5, 1968	Letter Symbols for Quantities Used in Electrical Science and Electrical Engineering.

The following prefix letters are used as reference designators to identify components or assemblies on the diagrams.

A	Assembly, separable or repairable (circuit board, etc)	H	Heat dissipating device (heat sink, heat radiator, etc)	S	Switch or contactor
AT	Attenuator, fixed or variable	HR	Heater	T	Transformer
B	Motor	HY	Hybrid circuit	TC	Thermocouple
BT	Battery	J	Connector, stationary portion	TP	Test point
C	Capacitor, fixed or variable	K	Relay	U	Assembly, inseparable or non-repairable (integrated circuit, etc.)
CB	Circuit breaker	L	Inductor, fixed or variable	V	Electron tube
CR	Diode, signal or rectifier	M	Meter	VR	Voltage regulator (zener diode, etc.)
DL	Delay line	P	Connector, movable portion	W	Wirestrap or cable
DS	Indicating device (lamp)	Q	Transistor or silicon-controlled rectifier	Y	Crystal
E	Spark Gap, Ferrite bead	R	Resistor, fixed or variable	Z	Phase shifter
F	Fuse	RT	Thermistor		
FL	Filter				

The following special symbols may appear on the diagrams:

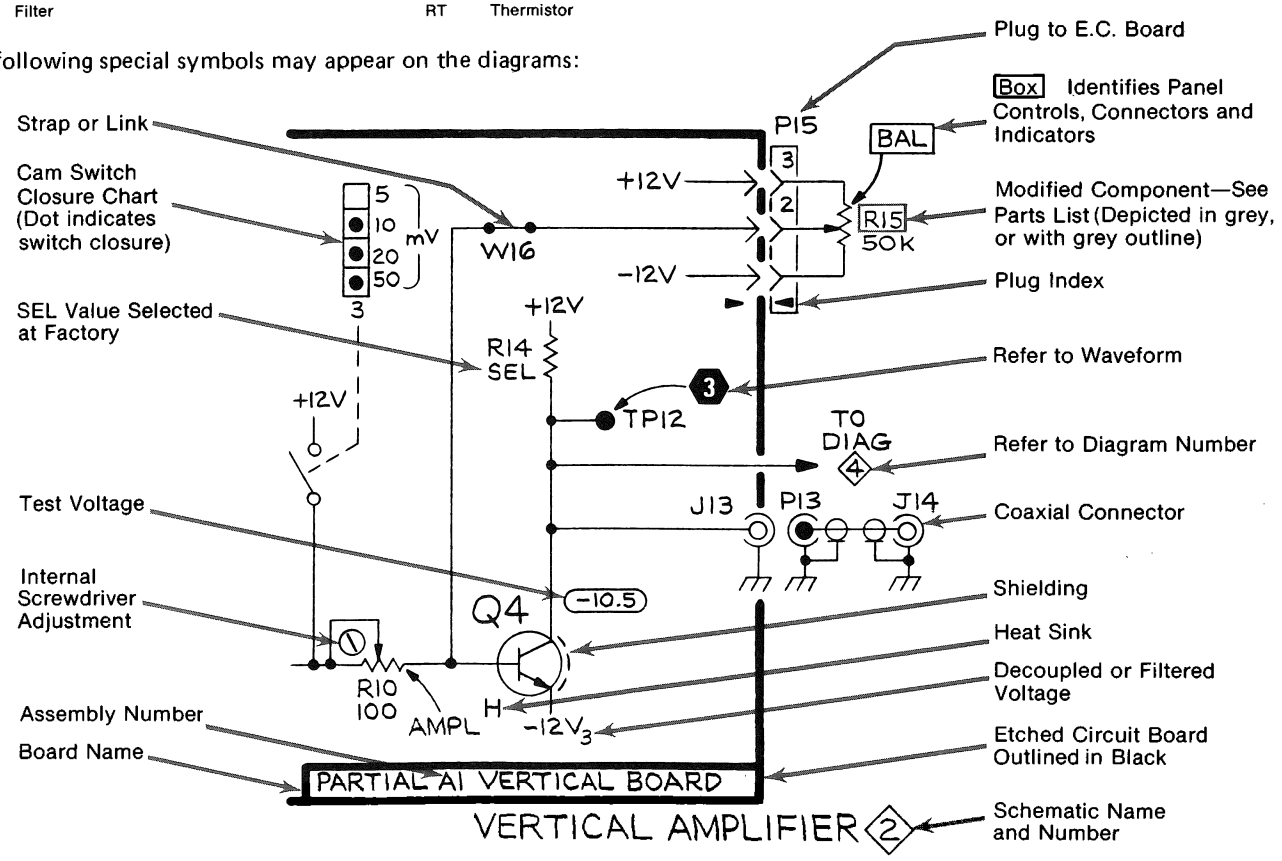

PARTS LOCATION GRID

AF 501

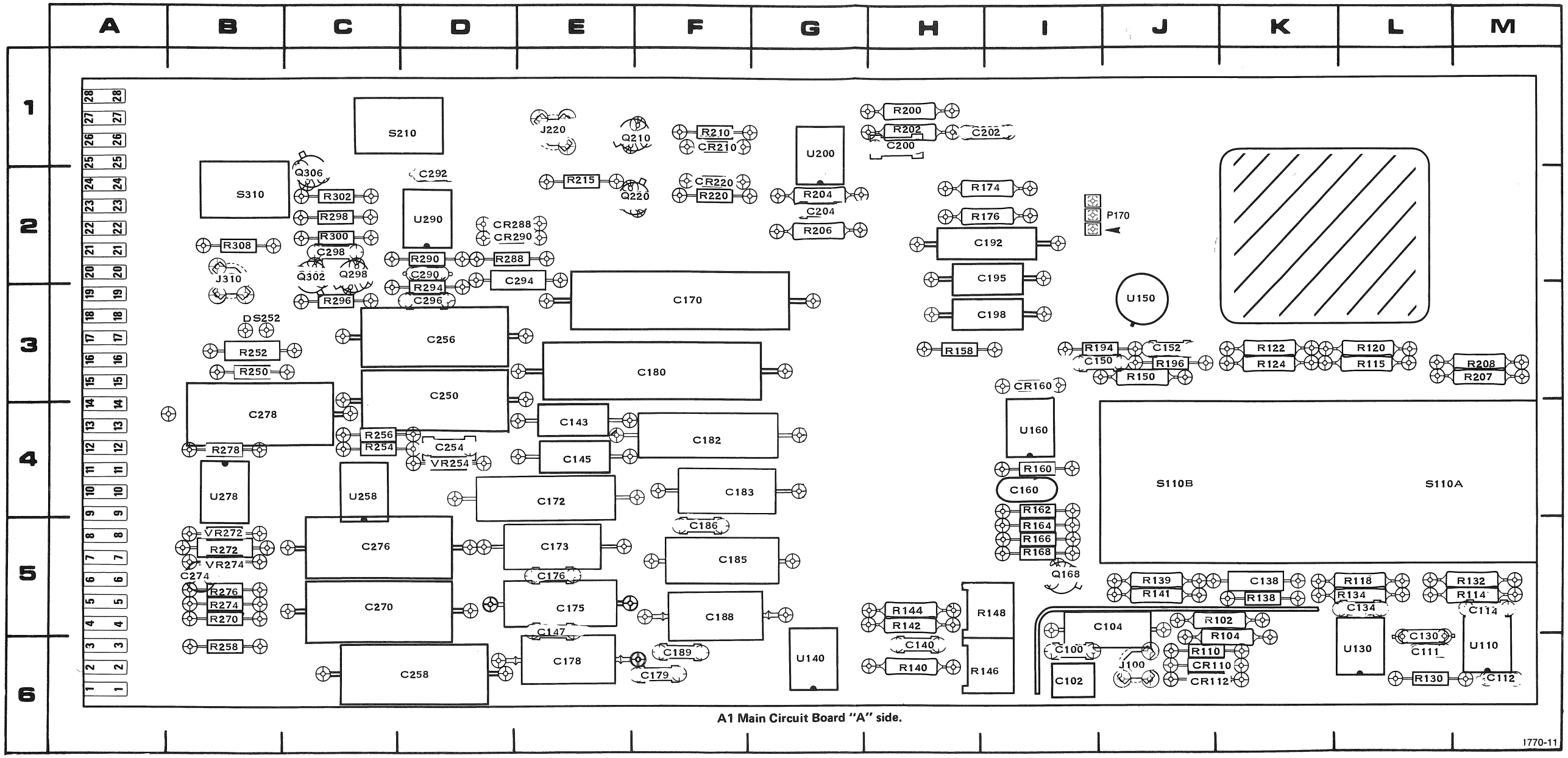

A1 Main Circuit Board "A" side.

1770-11

CKT NO	GRID LOC	CKT NO	GRID LOC	CKT NO	GRID LOC	CKT NO	GRID LOC	CKT NO	GRID LOC	CKT NO	GRID LOC	CKT NO	GRID LOC	CKT NO	GRID LOC
C100	I6	C176	E5	C270	C5	J100	J6	R122	K3	R174	I2	R274	B5	U150	J3
C102	I6	C178	E6	C274	B5	J220	E1	R124	K3	R176	I2	R276	B5	U160	I4
C104	J5	C179	F6	C276	C5	J310	B3	R130	L6	R194	I3	R278	B4	U200	G1
C111	L6	C180	F3	C278	B4			R132	M5	R196	J3	R288	D2	U258	C4
G112	M6	C182	F4	C290	D2	P170	I2	R134	L5	R200	H1	R290	D2	U278	B4
C114	M5	C183	F4	C292	D2			R138	K5	R202	H1	R294	D3	U290	D2
C130	L6	C185	F5	C294	E3	Q168	I5	R139	J5	R204	G2	R296	C3		
C134	L5	C186	F5	C296	D3	Q210	F1	R140	H6	R206	G2	R298	C2	VR254	D4
C138	K5	C188	F5	C298	C2	Q220	F2	R141	J5	R207	M3	R300	C2	VR272	B5
C140	H6	C189	F6			Q298	C3	R142	H5	R208	M3	R302	C2	VR274	B5
C143	E4	C192	I2	CR110	J6	Q302	C3	R144	H5	R210	F1	R308	B2		
C145	E4	C195	I3	CR112	J6	Q306	C2	R146	I6	R215	E2				
C147	E6	C198	I3	CR160	I3			R148	I5	R220	F2	S110A	L4		
C150	I3	C200	H1	CR210	F1	R102	J5	R150	J3	R250	B3	S110B	J4		
C152	J3	C202	I1	CR220	F2	R104	K6	R158	H3	R252	B3	S210	D1		
C160	I4	C204	G2	CR288	D2	R110	J6	R160	I4	R254	C4	S310	B2		
C170	F3	C250	D4	CR290	D2	R114	M5	R162	I5	R256	C4				
C172	E4	C254	D4			R115	L3	R164	I5	R258	B6	U110	M6		
C173	E5	C256	D3	DS252	B3	R118	L5	R166	I5	R270	B5	U130	L6		
C175	E5	C258	D6			R120	L3	R168	I5	R272	B5	U140	G6		

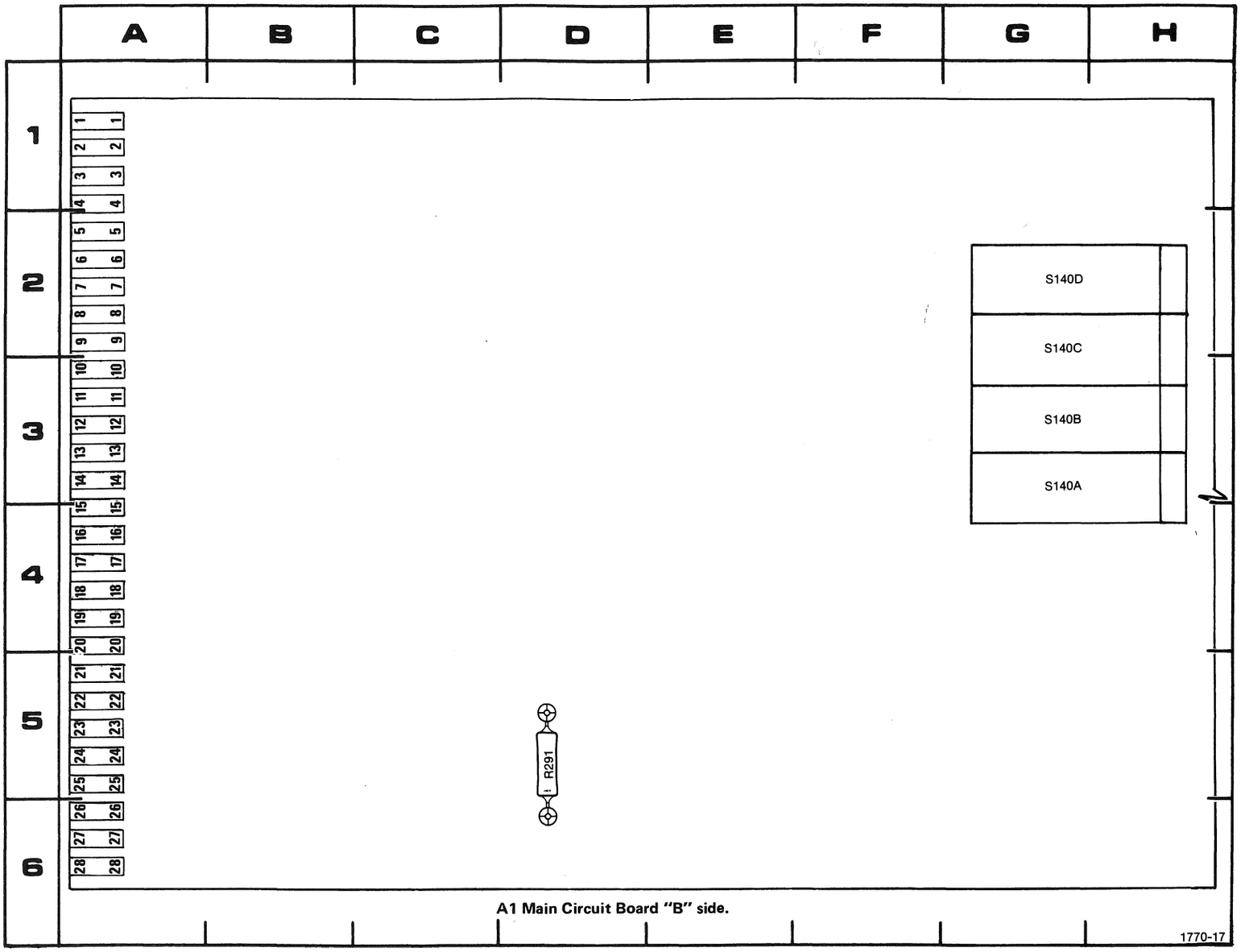

A1 Main Circuit Board "B" side.

CKT NO	GRID LOC
R291	D5
S140A	G3
S140B	G3
S140C	G2
S140D	G2

VOLTAGE AND WAVEFORM CONDITIONS

WARNING

Dangerous potentials exist at several points throughout this instrument. When the instrument is operated with the covers removed, do not touch exposed connections or components. Some transistors have voltages present on their cases. Disconnect the power source before replacing parts.

The voltages and waveforms shown on diagrams 1 and 2 were taken with the AF 501 front panel controls set as follows:

VOLTAGES & WAVEFORMS*

FREQUENCY dial	20
FREQ MULT pushbutton	X1
GAIN	1
MODE	as noted

***Ground Reference: center horizontal graticule line.**

The voltages shown were taken with no input signal applied to the input connector of the AF 501 and the MODE switch in AMPLIFIER position.

The waveforms shown were taken with no input signal applied to the input connector of the AF 501 and the MODE switch position either in AMPLIFIER or OSCILLATOR (the appropriate waveform will be noted).

Voltage Conditions. The voltages shown on the diagram were obtained using a digital multimeter with a 10 megohm input impedance (TEKTRONIX DM 501 Digital Multimeter or TEKTRONIX 7D13 Digital Multimeter used with readout equipped, 7000-series oscilloscope).

Waveform Conditions. The waveforms shown are actual waveform photographs taken with a Tektronix Oscilloscope Camera System and Projected Graticule. Vertical deflection factor shown on the waveform is the actual deflection factor from the probe tip. Voltages and waveforms on the diagrams are not absolute and may vary between instruments because of component tolerances, internal calibration, or front-panel settings. Readouts are simulated in larger-than-normal type.

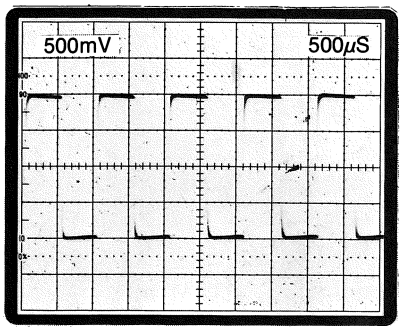

1 MODE: AMPLIFIER

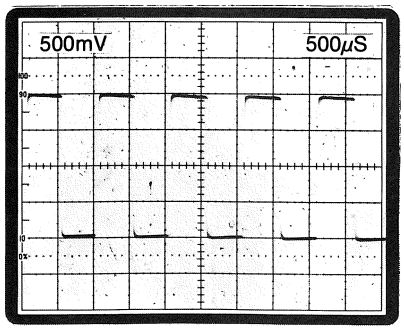

2 MODE: AMPLIFIER

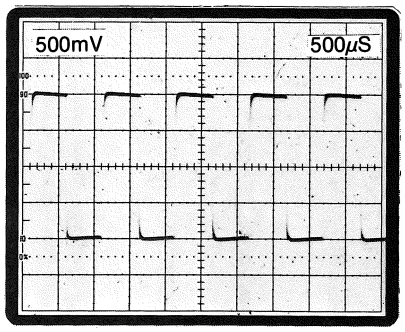

3 MODE: AMPLIFIER

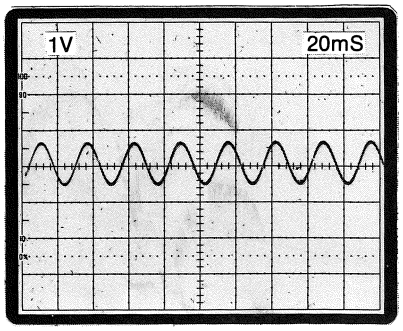

8 MODE: OSCILLATOR

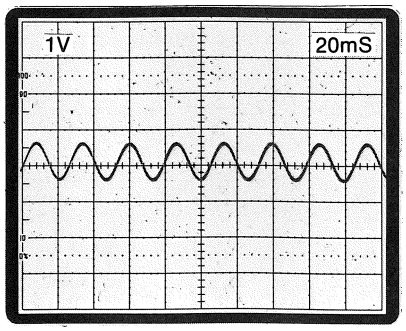

9 MODE: OSCILLATOR

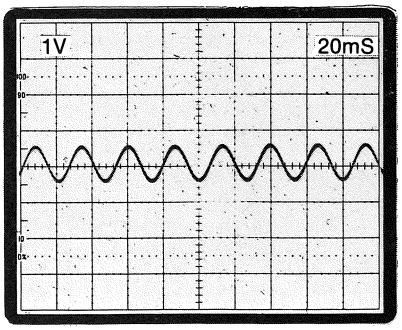

10 MODE: OSCILLATOR

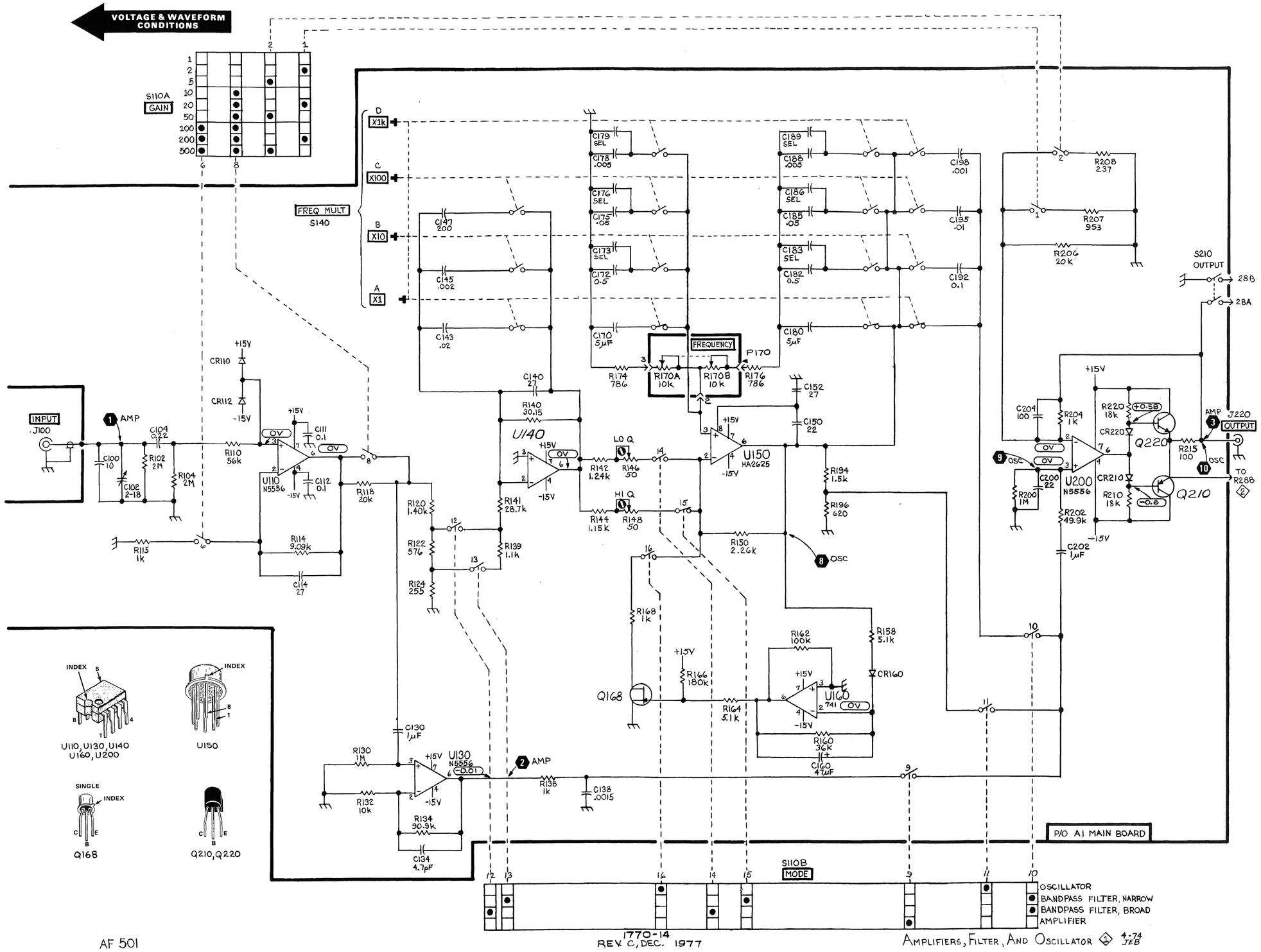

AF 501

1770-14
REV. C, DEC. 1977

AMPLIFIERS, FILTER, AND OSCILLATOR 4 4-74 JEB

VOLTAGE AND WAVEFORM CONDITIONS

WARNING

Dangerous potentials exist at several points throughout this instrument. When the instrument is operated with the covers removed, do not touch exposed connections or components. Some transistors have voltages present on their cases. Disconnect the power source before replacing parts.

The voltages and waveforms shown on diagrams 1 and 2 were taken with the AF 501 front panel controls set as follows:

VOLTAGES & WAVEFORMS*

FREQUENCY dial	20
FREQ MULT pushbutton	X1
GAIN	1
MODE	as noted

***Ground reference: center horizontal graticule line.**

The voltages shown were taken with no input signal applied to the input connector of the AF 501 and the MODE switch in AMPLIFIER position.

The waveforms shown were taken with no input signal applied to the input connector of the AF 501 and the MODE switch position either in AMPLIFIER or OSCILLATOR (the appropriate waveform will be noted).

Voltage Conditions. The voltages shown on the diagram were obtained using a digital multimeter with a 10 megohm input impedance (TEKTRONIX DM 501 Digital Multimeter or TEKTRONIX 7D13 Digital Multimeter used with readout equipped, 7000-series oscilloscope).

Waveform Conditions. The waveforms shown are actual waveform photographs taken with a Tektronix Oscilloscope Camera System and Projected Graticule. Vertical deflection factor shown on the waveform is the actual deflection factor from the probe tip. Voltages and waveforms on the diagrams are not absolute and may vary between instruments because of component tolerances, internal calibration, or front-panel settings. Readouts are simulated in larger-than-normal type.

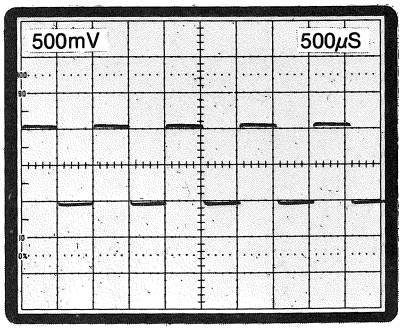

4 MODE: AMPLIFIER

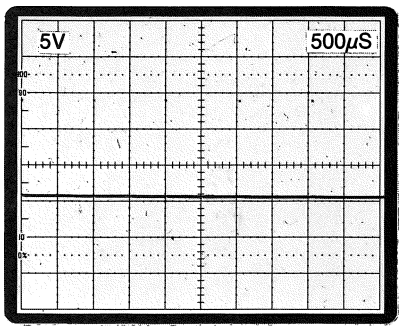

5 MODE: AMPLIFIER

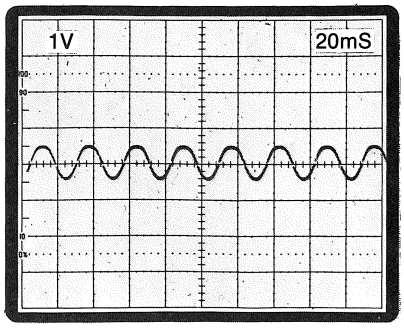

6 MODE: OSCILLATOR

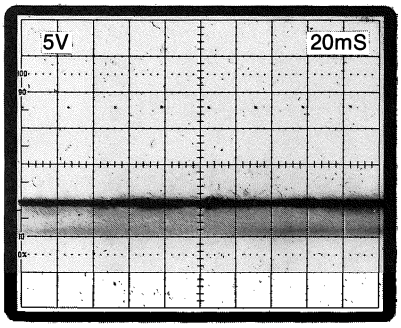

7 MODE: OSCILLATOR

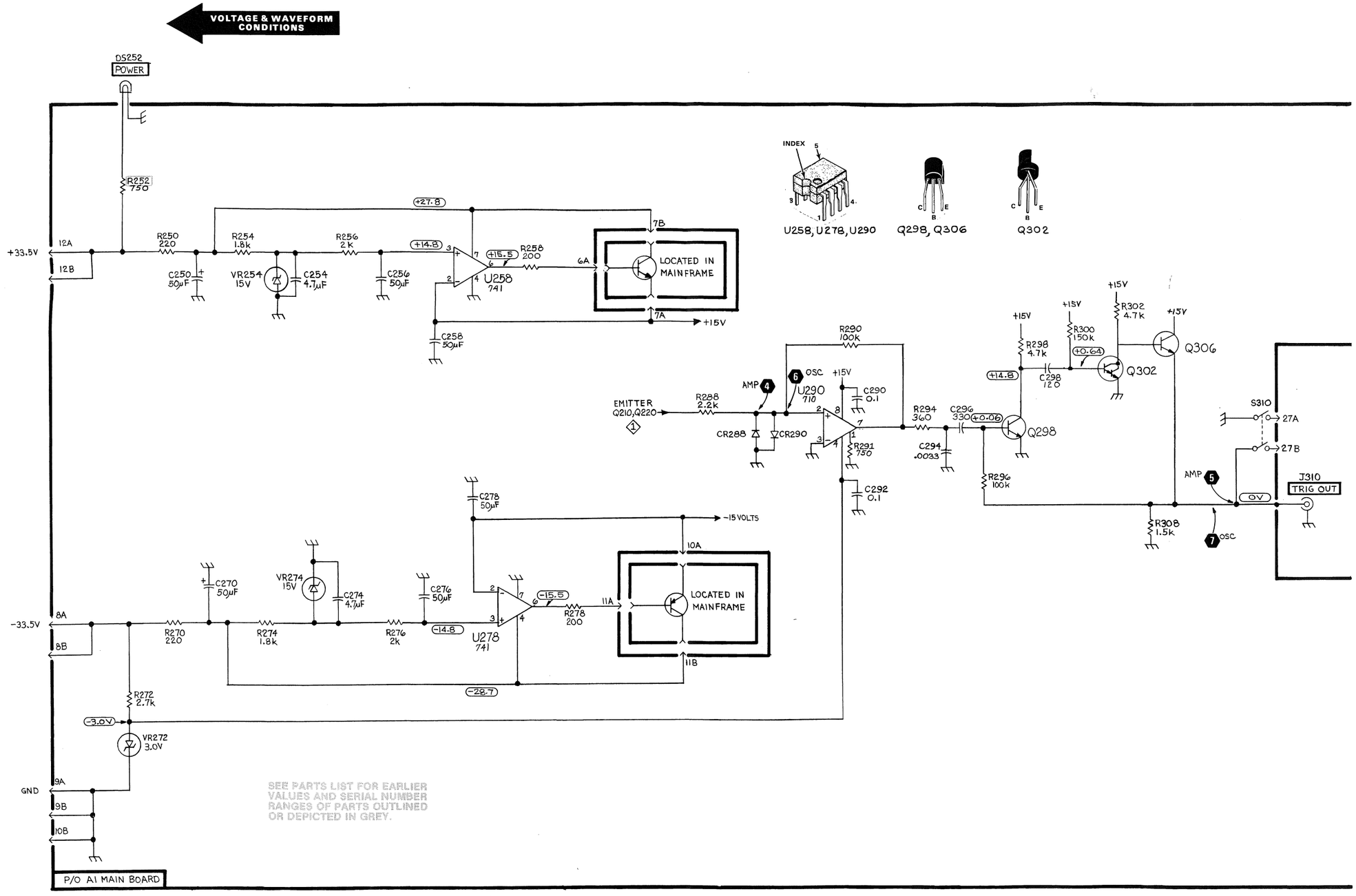

POWER SUPPLY & TRIGGER CIRCUIT

2

REPLACEABLE MECHANICAL PARTS

PARTS ORDERING INFORMATION

Replacement parts are available from or through your local Tektronix, Inc. Field Office or representative.

Changes to Tektronix instruments are sometimes made to accommodate improved components as they become available, and to give you the benefit of the latest circuit improvements developed in our engineering department. It is therefore important, when ordering parts, to include the following information in your order: Part number, instrument type or number, serial number, and modification number if applicable.

If a part you have ordered has been replaced with a new or improved part, your local Tektronix, Inc. Field Office or representative will contact you concerning any change in part number.

Change information, if any, is located at the rear of this manual.

SPECIAL NOTES AND SYMBOLS

X000	Part first added at this serial number
00X	Part removed after this serial number

FIGURE AND INDEX NUMBERS

Items in this section are referenced by figure and index numbers to the illustrations.

INDENTATION SYSTEM

This mechanical parts list is indented to indicate item relationships. Following is an example of the indentation system used in the description column.

1 2 3 4 5 Name & Description

Assembly and/or Component
Attaching parts for Assembly and/or Component
- - - * - - -
Detail Part of Assembly and/or Component
Attaching parts for Detail Part
- - - * - - -
Parts of Detail Part
Attaching parts for Parts of Detail Part
- - - * - - -

Attaching Parts always appear in the same indentation as the item it mounts, while the detail parts are indented to the right. Indented items are part of, and included with, the next higher indentation. The separation symbol - - - * - - - indicates the end of attaching parts.

Attaching parts must be purchased separately, unless otherwise specified.

ITEM NAME

In the Parts List, an Item Name is separated from the description by a colon (:). Because of space limitations, an Item Name may sometimes appear as incomplete. For further Item Name identification, the U.S. Federal Cataloging Handbook H6-1 can be utilized where possible.

ABBREVIATIONS

"	INCH
#	NUMBER SIZE
ACTR	ACTUATOR
ADPTR	ADAPTER
ALIGN	ALIGNMENT
AL	ALUMINUM
ASSEM	ASSEMBLED
ASSY	ASSEMBLY
ATTEN	ATTENUATOR
AWG	AMERICAN WIRE GAGE
BD	BOARD
BRKT	BRACKET
BRS	BRASS
BRZ	BRONZE
BSHG	BUSHING
CAB	CABINET
CAP	CAPACITOR
CER	CERAMIC
CHAS	CHASSIS
CKT	CIRCUIT
COMP	COMPOSITION
CONN	CONNECTOR
COV	COVER
CPLG	COUPLING
CRT	CATHODE RAY TUBE
DEG	DEGREE
DWR	DRAWER
ELCTRN	ELECTRON
ELEC	ELECTRICAL
ELCTLT	ELECTROLYTIC
ELEM	ELEMENT
EPL	ELECTRICAL PARTS LIST
EQPT	EQUIPMENT
EXT	EXTERNAL
FIL	FILLISTER HEAD
FLEX	FLEXIBLE
FLH	FLAT HEAD
FLTR	FILTER
FR	FRAME or FRONT
FSTNR	FASTENER
FT	FOOT
FXD	FIXED
GSKT	GASKET
HDL	HANDLE
HEX	HEXAGON
HEX HD	HEXAGONAL HEAD
HEX SOC	HEXAGONAL SOCKET
HLCPS	HELICAL COMPRESSION
HLEXT	HELICAL EXTENSION
HV	HIGH VOLTAGE
IC	INTEGRATED CIRCUIT
ID	INSIDE DIAMETER
IDENT	IDENTIFICATION
IMPLR	IMPELLER
IN	INCH
INCAND	INCANDESCENT
INSUL	INSULATOR
INTL	INTERNAL
LPHLDR	LAMPHOLDER
MACH	MACHINE
MECH	MECHANICAL
MTG	MOUNTING
NIP	NIPPLE
NON WIRE	NOT WIRE WOUND
OBD	ORDER BY DESCRIPTION
OD	OUTSIDE DIAMETER
OVH	OVAL HEAD
PH BRZ	PHOSPHOR BRONZE
PL	PLAIN or PLATE
PLSTC	PLASTIC
PN	PART NUMBER
PNH	PAN HEAD
PWR	POWER
RCPT	RECEPTACLE
RES	RESISTOR
RGD	RIGID
RLF	RELIEF
RTNR	RETAINER
SCH	SOCKET HEAD
SCOPE	OSCILLOSCOPE
SCR	SCREW
SE	SINGLE END
SECT	SECTION
SEMICOND	SEMICONDUCTOR
SHLD	SHIELD
SHLDR	SHOULDERED
SKT	SOCKET
SL	SLIDE
SLFLKG	SELF-LOCKING
SLVG	SLEEVING
SPR	SPRING
SQ	SQUARE
SST	STAINLESS STEEL
STL	STEEL
SW	SWITCH
T	TUBE
TERM	TERMINAL
THD	THREAD
THK	THICK
TNSN	TENSION
TPG	TAPPING
TRH	TRUSS HEAD
V	VOLTAGE
VAR	VARIABLE
W/	WITH
WSHR	WASHER
XFMR	TRANSFORMER
XSTR	TRANSISTOR

CROSS INDEX—MFR. CODE NUMBER TO MANUFACTURER

Mfr. Code	Manufacturer	Address	City, State, Zip
05091	TRI-ORDINATE CORPORATION	343 SNYDER AVENUE	BERKELEY HEIGHTS, NJ 07922
08261	SPECTRA-STRIP CORP.	7100 LAMPSON AVE.	GARDEN GROVE, CA 92642
10539	JACKSON BROS., LONDON, LTD.		CROYDEN, SURREY, ENGLAND
12327	FREEWAY CORPORATION	9301 ALLEN DRIVE	CLEVELAND, OH 44125
22526	BERG ELECTRONICS, INC.	YOUK EXPRESSWAY	NEW CUMBERLAND, PA 17070
45722	USM CORP., PARKER-KALON FASTENER DIV.		CAMPBELLSVILLE, KY 42718
70276	ALLEN MFG. CO.	P. O. DRAWER 570	HARTFORD, CT 06101
73743	FISCHER SPECIAL MFG. CO.	446 MORGAN ST.	CINCINNATI, OH 45206
73803	TEXAS INSTRUMENTS, INC., METALLURGICAL MATERIALS DIV.	34 FOREST STREET	ATTLEBORO, MA 02703
74445	HOLO-KROME CO.	31 BROOK ST. WEST	HARTFORD, CT 06110
77250	PHEOLL MANUFACTURING CO., DIVISION OF ALLIED PRODUCTS CORP.	5700 W. ROOSEVELT RD.	CHICAGO, IL 60650
78189	ILLINOIS TOOL WORKS, INC. SHAKEPROOF DIVISION	ST. CHARLES ROAD	ELGIN, IL 60120
79727	C-W INDUSTRIES	550 DAVISVILLE RD.,P O BOX 96	WARMINISTER, PA 18974
80009	TEKTRONIX, INC.	P O BOX 500	BEAVERTON, OR 97077
83385	CENTRAL SCREW CO.	2530 CRESCENT DR.	BROADVIEW, IL 60153
97464	INDUSTRIAL RETAINING RING CO.	57 CORDIER ST.	IRVINGTON, NJ 07111

Fig. & Index No.	Tektronix Part No.	Serial/Model No. Eff	Dscont	Qty	1 2 3 4 5 Name & Description	Mfr Code	Mfr Part Number
1-1	337-1399-02			1	SHLD,ELECTRICAL:SIDE WITH INSULATOR	80009	337-1399-02
	337-1399-00			1	SHLD,ELECTRICAL:SIDE	80009	337-1399-00
-2	366-1207-00			1	KNOB:GRAY	80009	366-1207-00
	----- -----			-	. KNOB INCLUDES:		
	213-0153-00			1	. SETSCREW:5-40 X 0.125 INCH,HEX SOC STL	74445	OBD
-3	366-1007-00			1	KNOB:ASSY W/WHITE DOT	80009	366-1007-00
	----- -----			-	. KNOB INCLUDES:		
	213-0153-00			2	. SETSCREW:5-40 X 0.125 INCH,HEX SOC STL	74445	OBD
-4	366-1107-01			1	KNOB:GRAY,4 SIDED W/SETSCREW	80009	366-1170-01
	----- -----			-	. KNOB INCLUDES:		
	213-0153-00			2	. SETSCREW:5-40 X 0.125 INCH,HEX SOC STL	74445	OBD
-5	354-0437-04			1	RING,KNOB SKIRT:	80009	354-0437-04
					(ATTACHING PARTS)		
-6	211-0088-00			2	SCREW,MACHINE:2-56 X 0.281"82 DEG,FLH STL	77250	OBD
					- - - * - - -		
-7	366-1422-01	B010100	B021069	1	KNOB:LATCH	80009	366-1422-01
	366-1690-00	B21070		1	KNOB,LATCH:	80009	366-1690-00
					(ATTACHING PARTS)		
	214-1840-00	B010100	B021069X	1	PIN,KNOB SECRG:0.094 OD X 0.120 INCH LONG	80009	214-1840-00
					- - - * - - -		
-8	366-1489-72			1	PUSHBUTTON:GRAY X1	80009	366-1489-72
-9	366-1257-87			1	PUSHBUTTON:GRAY X10	80009	366-1257-87
-10	366-1402-41			1	PUSHBUTTON:GRAY X100	80009	366-1402-41
-11	366-1402-48			1	PUSHBUTTON:GRAY X1K	80009	366-1402-48
-12	131-0955-00			3	CONNECTOR,RCPT,:BNC,FEMALE,W/HARDWARE	05091	31-279
					(ATTACHING PARTS)		
-13	210-0255-00			1	TERMINAL,LUG:0.391" ID INT TOOTH	80009	210-0255-00
					- - - * - - -		
-14	333-1896-00			1	PANEL,FRONT:	80009	333-1896-00
					(ATTACHING PARTS)		
-15	213-0055-00			1	SCR,TPG,THD FOR:2-32 X 0.188 INCH,PNH STL	83385	OBD
					- - - * - - -		
-16	426-0681-00			4	FR,PUSH BUTTON:GRAY PLASTIC	80009	426-0681-00
-17	200-0935-00			1	BASE,LAMPHOLDER:0.29 OD X 0.19 CASE	80009	200-0935-00
-18	378-0602-00			1	LENS,LIGHT:GREEN	80009	378-0602-00
-19	352-0157-00			1	LAMPHOLDER:WHITE PLASTIC	80009	352-0157-00
-20	----- -----			1	RES.,VARIABLE:W/HARDWARE(SEE R170A & B EPL)		
					(ATTACHING PARTS)		
-21	210-0902-00			1	WASHER,FLAT:0.470 ID X 0.656 INCH OD,STL	12327	OBD
					- - - * - - -		
-22	407-1274-00			1	BRKT,RES.MTS:	80009	407-1274-00
					(ATTACHING PARTS)		
-23	211-0559-00			1	SCREW,MACHINE:6-32 X 0.375"100 DEG,FLH STL	83385	OBD
					- - - * - - -		
-24	213-0020-00			2	SETSCREW:6-32 X 0.125 INCH,HEX.SOC STL	70276	OBD
-25	401-0161-00			1	DRIVE,TURNS,RED:6 1 REDUCTION	10539	4511/DAF
					(ATTACHING PARTS)		
-26	213-0088-00			2	SCR,TPG,THD CTG:4-24 X 0.25 INCH,PNH STL	83385	OBD
					- - - * - - -		
-27	386-3046-00			1	SUBPANEL,FRONT:	80009	386-3046-00
					(ATTACHING PARTS)		
-28	213-0229-00			4	SCR,TPG,THD FOR:6-20 X0.375"100 DEG,FLH STL	83385	OBD
					- - - * - - -		
	214-1513-01	B010100	B021069	1	LCH,PLUG-IN RET:	80009	214-1513-01
-29	105-0719-00	B021070		1	LATCH,RETAINING:PLUG-IN	80009	105-0719-00
					(ATTACHING PARTS)		
-30	213-0254-00			1	SCR,TPG,THD CTG:2-32 X 0.250,100 DEG,FLH	45722	OBD
					- - - * - - -		
-31	105-0718-00	B021070		1	RELEASE,LATCH:	80009	105-0718-00
-32	337-2039-00			1	SHLD,ELECTRICAL:FRONT SUBPANEL	80009	337-2039-00
-33	384-1101-00			4	EXTENSION SHAFT:4.14 INCH LONG	80009	384-1101-00
	672-0454-00			1	CKT BOARD ASSY:W/CAM	80009	672-0454-00
					(ATTACHING PARTS)		
-34	213-0146-00			4	SCR,TPG,THD FOR:6-20 X 0.313 INCH,PNH STL	83385	OBD
					- - - * - - -		

Fig. & Index No.	Tektronix Part No.	Serial/Model No. Eff	Dscont	Qty	1 2 3 4 5 Name & Description	Mfr Code	Mfr Part Number
1-	----- -----			-	. CKT BOARD ASSY INCLUDES:		
	263-1097-00			1	. ACTR ASSY,CAM:	80009	263-1097-00
					(ATTACHING PARTS)		
-35	211-0116-00			6	. SCR,ASSEM WSHR:4-40 X 0.312 INCH,PNH BRS	83385	OBD
					- - - * - - -		
	----- -----			-	. . ACTR ASSY INCLUDES:		
-36	200-1734-00			1	. . COVER,CAM SW:	80009	200-1734-00
					(ATTACHING PARTS)		
-37	211-0008-00			6	. . SCREW,MACHINE:4-40 X 0.25 INCH,PNH STL	83385	OBD
-38	210-0004-00			6	. . WASHER,LOCK:INTL,0.12 ID X 0.26"OD,STL	78189	1204-00-00-0541C
					- - - * - - -		
-39	131-0963-00			2	. . CONTACT,ELEC:GROUNDING	80009	131-0963-00
-40	210-0406-00			2	. . NUT,PLAIN,HEX.:4-40 X 0.188 INCH,BRS	73743	2X12161-402
-41	214-1139-02			2	. . SPRING,FLAT:GREEN COLORED	80009	214-1139-02
-42	214-1127-00			2	. . ROLLER,DETENT:0.125 DIA X 0.125 INCH L	80009	214-1127-00
-43	354-0391-00			1	. . RING,RETAINING:0.395"FREE ID X 0.025" STL	97464	3100-43-CD
-44	401-0081-02			1	. . BEARING,CAM SW:FRONT	80009	401-0081-02
-45	105-0630-00			1	. . ACTR,CAM SW:RANGE	80009	105-0630-00
-46	210-0406-00			4	. . NUT,PLAIN,HEX.:4-40 X 0.188 INCH,BRS	73743	2X12161-402
-47	401-0115-00			1	. . BEARING,CAM SW:CENTER	80009	401-0115-00
-48	354-0391-00			1	. . RING,RETAINING:0.395"FREE ID X 0.025" STL	97464	3100-43-CD
-49	105-0629-00			1	. . ACTR,CAM SW:MODE FOR AF501	80009	105-0629-00
-50	210-0406-00			4	. . NUT,PLAIN,HEX.:4-40 X 0.188 INCH,BRS	73743	2X12161-402
-51	214-1139-02			2	. . SPRING,FLAT:GREEN COLORED	80009	214-1139-02
-52	214-1127-00			2	. . ROLLER,DETENT:0.125 DIA X 0.125 INCH L	80009	214-1127-00
-53	401-0081-02			1	. . BEARING,CAM SW:FRONT	80009	401-0081-02
-54	----- -----			-	. CKT BOARD ASSY:MAIN(SEE A-1 EPL)		
-55	136-0252-04			29	. . SOCKET,PIN TERM:0.188 INCH LONG	22526	75060
-56	136-0514-00			8	. . SOCKET,PLUG IN:MICROCIRCUIT,8 CONTACT	73803	C950802
-57	131-1003-00			3	. . CONNECTOR BODY,:CKT CD MT,3 PRONG	80009	131-1003-00
-58	131-0604-00			12	. . CONTACT,ELEC:CKT CD SW,SPR	80009	131-0604-00
-59	131-0608-00			3	. . CONTACT,ELEC:0.365 L X 0.25 PH BRZ GOLD PL	22526	47357
-60	260-1711-00			1	. . SWITCH,PUSH:FREQ MULT	80009	260-1711-00
					(ATTACHING PARTS)		
-61	361-0385-00			4	. . SPACER,PB SW:0.164 INCH LONG	80009	361-0385-00
					- - - * - - -		
-62	260-0723-00			2	. . SWITCH,SLIDE:DPDT,0.5A,125VAC	79727	GF126-0028
-63	337-2074-00			1	. . SHIELD,ELEC:CKT BD MAIN	80009	337-2074-00
-64	214-1061-00			1	SPRING,GROUND:FLAT	80009	214-1061-00
-65	426-0725-00			1	FR SECT,PLUG-IN:TOP	80009	426-0725-00
-66	386-3657-00	XB021070		2	SUPPORT,PLUG-IN:	80009	386-3657-00
-67	210-1270-00	XB021070		2	WASHER,FLAT:0.141 ID X 0.04 THK,AL,0.219 OD	80009	210-1270-00
-68	426-0724-00			1	FR SECT,PLUG-IN:BOTTOM	80009	426-0724-00
-69	175-0825-00			AR	WIRE,ELECTRICAL:2 WIRE RIBBON	08261	OBD
-70	175-0826-00			AR	WIRE,ELECTRICAL:3 WIRE RIBBON	08261	175-0826-00
-71	131-0707-00			3	CONNECTOR,TERM.:0.48" L,22-26AWG WIRE	22526	75691-005
-72	352-0161-09			1	CONN BODY,PL,EL:3 WIRE WHITE	80009	352-0161-09
-73	210-0774-00			3	EYELET,METALLIC:0.152 OD X 0.245 INCH L,BRS	80009	210-0774-00
-74	210-0775-00			3	EYELET,METALLIC:0.126 OD X 0.23 INCH L,BRS	80009	210-0775-00

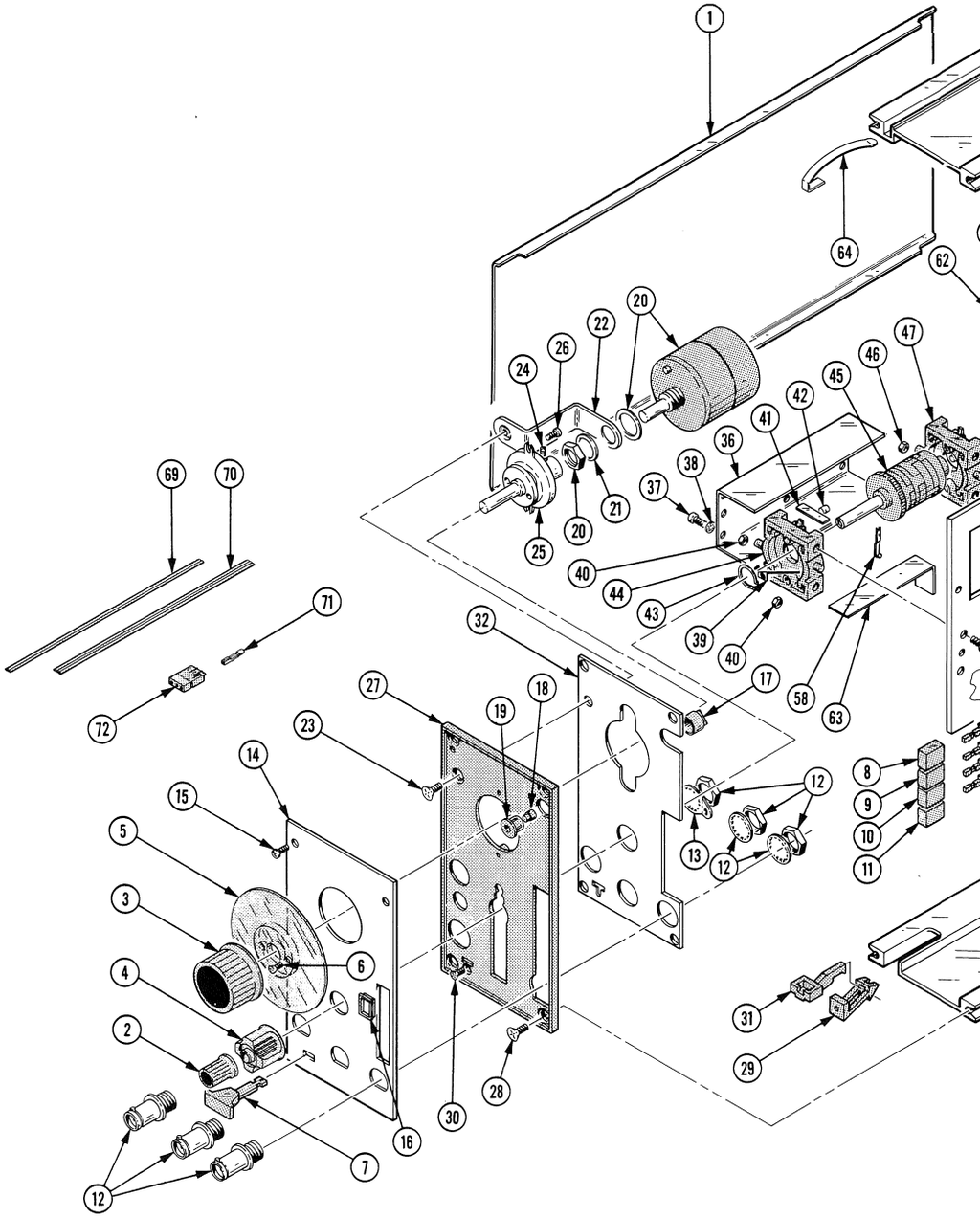
1
64
62
20
22
26
24
47
46
45
42
41
36
38
37
21
20
25
40
44
43
39
40
58
63
69
70
71
72
32
17
27
18
19
23
14
15
5
3
6
4
2
7
12
16
30
28
12
13
12
8
9
10
11
31
29

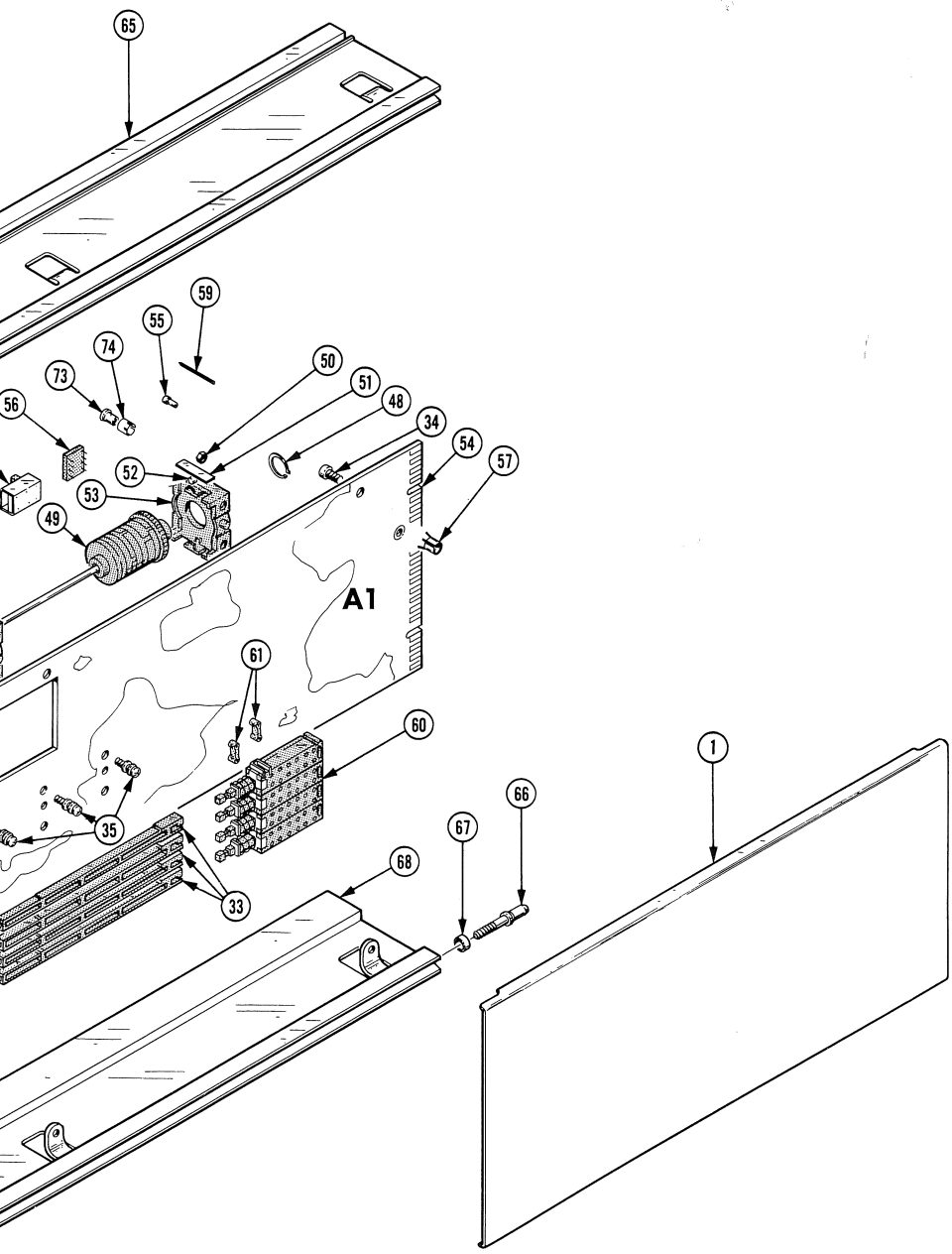

FIG. 1 EXPLODED

STANDARD ACCESSORIES

Fig. & Index No.	Tektronix Part No.	Serial/Model No. Eff	Dscont	Qty	1 2 3 4 5	Name & Description	Mfr Code	Mfr Part Number
	070-1770-01			1		MANUAL,TECH:INSTRUCTION	80009	070-1770-01