TYPICAL OSCILLOSCOPE CIRCUITRY

REVISED EDITION

TEKTRONIX

INC.

TYPICAL OSCILLOSCOPE CIRCUITRY

REVISED EDITION

Second Printing, Revised Edition
October, 1964

Tektronix, Inc.

S. W. Millikan Way • P. O. Box 500 • Beaverton, Oregon • Phone MI 4-0161
Cables: Tektronix

070-253

INTRODUCTION

The tools of science are basically extensions of the operator's senses. They allow us to measure quantities so large or so small that they cannot be examined directly. In many fields the oscilloscope has become an indispensable tool for the scientist or technician. It enables him to make quantitative and qualitative measurements of electrical phenomena not readily measurable by other means.

Manipulation of the front-panel controls of an oscilloscope can be learned by rote. To use the instrument to its fullest capabilities a knowledge of oscilloscope circuitry is essential.

The purpose of this book is to introduce the reader to basic oscilloscope circuitry. It is written specifically for persons who begin with only a rudimentary knowledge of electronics. An understanding of the function of electronic components is developed before the reader is introduced to circuitry. No attempt to make a complete mathematical analysis of each case will be found: rather, we have presented the mathematics necessary for the reader to understand and apply the principle set forth.

While the book has been written as outlined above, we feel that the competent technician will find much here to enhance his understanding of oscilloscope circuitry. Both maintenance and application of the instrument will benefit from the information gained.

Finally, this is a first attempt on our part to present this type of information. We welcome comments on this book and would be interested in adding information if it seems desirable.

Tektronix, Inc.

CONTENTS

PREFACE TO THE REVISED EDITION

The first printing of "Typical Oscilloscope Circuitry" had a favorable reception both from our customers and from Tektronix personnel. The success of this first attempt has emboldened us to issue a revised edition. No major revisions will be found if the revised edition is compared to the first printing. Small errors which crept into the first printing have been corrected, and the drawings have been corrected to conform with these changes.

"Typical Oscilloscope Circuitry" brings together in one volume much of the basic information which has been used at Tektronix for training purposes. It may be used as a first text for teaching oscilloscope circuitry, or as supplementary material in a broader program.

New components and circuits are found in the latest oscilloscopes, but the present book is applicable to the majority of instruments. We believe that "Typical Oscilloscope Circuitry" will be useful for a number of years, and we will endeavor to keep it in print until our customers no longer feel a need for it.

Manuals Department
Tektronix, Inc.

Chapter 1

PULSE VOLTAGES AND CURRENTS

The subject of pulses is important to you if you use an oscilloscope in your work. Almost certainly many of the waveforms you look at with your oscilloscope are pulses.

If you maintain an oscilloscope you need to know about pulses because these instruments generally depend upon various pulse waveforms for their normal functioning.

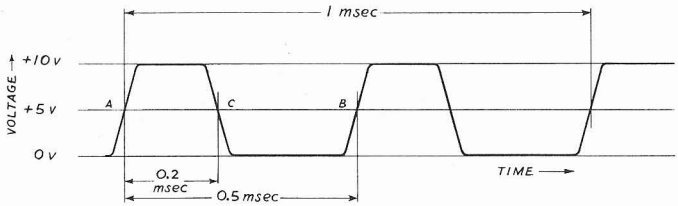

Fig. 1-1. A sequence of square-wave pulses.

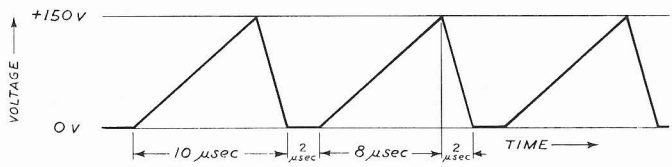

Fig. 1-2. A sequence of sawtooth pulses.

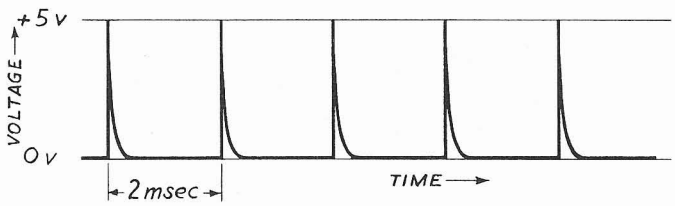

Fig. 1-3. A sequence of spike pulses.

A pulse is a waveform that occurs when a voltage or a current rises or falls from some constant "normal" value (perhaps zero, perhaps some other value), and later returns to that value. Examples of pulses include "square" waves (Fig. 1-1), "sawtooth" waves (Fig. 1-2), and "spikes" (Fig. 1-3).

For simplicity we shall in most cases consider periodic pulses. Periodic pulses are those that recur repeatedly, all pulses in a sequence being the same in shape, amplitude, duration, and time spacing.

1-1 Some quantities of interest in pulse studies. In order that we shall all have the same ideas in mind when we use a given term, let us define at least approximately some concepts from pulse terminology.

a. Pulse period. The pulse period in a sequence of periodic pulses is the elapsed time between any given point on one of the pulse waveforms and the same point on the following pulse. Thus the period of the square-wave pulses of Fig. 1-1, for example, is the interval between points A and B--that is, 0.5 millisecond.

b. Pulse repetition frequency. When we state the number of periodic pulses that occur in a given unit of time, we are expressing what is known as the pulse repetition frequency (or pulse repetition rate). For example, the pulses shown in Fig. 1-1 occur at a repetition frequency of 2 pulses per millisecond (equivalent at 2,000 pulses per second).

c. Pulse duration. The duration of a pulse is the time interval between the first and the last instants at which the pulse voltage (or current) reaches some specified percentage of the peak voltage (or current) of the pulse. Suppose we want to know the duration of each square-wave pulse in Fig. 1-1 between the 50-percent-of-peak-voltage instants. This duration is the interval between points A and C--that is, 0.2 millisecond.

d. Duty factor of pulses. For periodic pulses, the duty factor (often called the duty cycle) is equal to the duration of a pulse multiplied by the pulse repetition frequency. The duty factor is often expressed in percent. For example, the pulses in Fig. 1-1 have a duration (between the 50-percent-of-peak-voltage instants) of 0.2 millisecond, and a repetition frequency of 2 pulses per millisecond. Therefore, the duty factor of these pulses is $0.2 \times 2 = 0.4$, or 40 percent.

e. On-off ratio. This ratio is equal to the pulse duration divided by the remaining portion of the pulse period. The waveform of Fig. 1-1 shows pulses whose duration (between the 50-percent-of-peak-voltage instants) is 0.2 millisecond and whose period is 0.5 millisecond. Therefore the on-off ratio is $0.2 \div (0.5 - 0.2) = 2/3$, or about 67 percent. In some usages, the on-off ratio is called the mark-space ratio.

f. Pulse amplitude. The amplitude of a pulse is any term indicating the magnitude of the pulse. Thus we might refer to the peak-to-peak amplitude of a pulse (the number of voltage or current units separating the most positive excursion of the pulse from the most negative excursion). The instantaneous amplitude is simply an indication of the "height" of the pulse waveform, in voltage or current units, at any instant. The average amplitude of a pulse is the average of the instantaneous amplitude taken over the pulse duration. The effective or rms amplitude of a pulse is calculated in much

the same way that a similar quantity would be figured for a sine wave--by taking the square root of the average of the square of the instantaneous amplitude over the pulse duration.

(The "amplitude" designations just mentioned are the ones we encounter most often in electronics studies. But to avoid confusion in our communications with people in other fields--physics, mechanical engineering, etc.--we must remember that these people often use the term amplitude in somewhat specialized ways. For example, one common definition states that the amplitude of a wave is one-half the peak-to-peak excursion.)

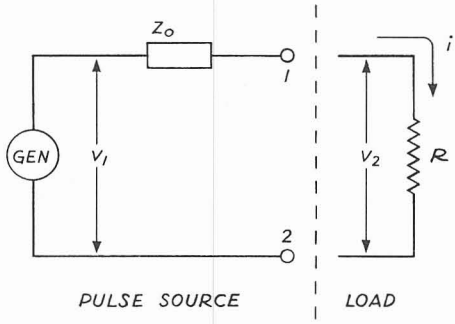

Fig. 1-4. We can represent a pulse source by a zero-impedance generator that delivers a varying no-load signal voltage v_1, in series with an internal impedance Z_0. If Z_0 is small, we refer to the pulse source as a constant-voltage source. If Z_0 is large, we refer to the pulse source as a constant-current source.

1-2 General nature of a pulse source. We can think of a device that generates or transmits pulses as if it were made up of these two devices connected in series (Fig. 1-4):

1. A zero-impedance generator delivering a voltage v_1 that is at every instant equal to the instantaneous no-load output voltage of the actual pulse generator or transmission device.

2. And an impedance Z_0 that simulates the actual internal impedance of the signal source.

Note that if we should measure the impedance of the source in Fig. 1-4 across its output terminals 1 and 2, in the absence of an external load, we would get a reading equal to the internal impedance Z_0 (since the generator itself is assumed to have zero impedance).

Now suppose we connect an external load R across the output terminals 1 and 2 of the source. We see that if the internal load impedance Z_0 is very small, the resulting signal current i will cause only a small voltage drop across Z_0. Under these conditions, then, the voltage v_2 supplied to the external load R will be nearly equal to the no-load source voltage v_1, over a wide range of values of the external load impedance. Thus we refer to a low-impedance signal source as a "constant-voltage source," meaning that the signal voltage it supplies to an external load doesn't depend much upon the impedance of that load.

On the other hand, if the internal load impedance Z_0 is very large, and if the external load impedance is only small or moderate, the amount of signal current i supplied to the load will not be much affected by changes in the external load impedance. Thus we refer to a high-impedance signal source as a "constant-current source," meaning that the signal current it supplies to an external load doesn't depend much upon the impedance of that load.

In summary, if we drive a load impedance by means of a low-impedance source (effectively a constant-voltage source), then the nature of the load will have relatively little effect on the source output voltage waveform although the output current waveform might be greatly affected. But if we use a high-impedance pulse source (effectively a constant-current source), then the nature of the load impedance will have relatively little effect on the output current waveform although the output voltage waveform might be greatly affected.

Although we shall use the ideas just expressed quite extensively, it certainly wouldn't be amiss to note that the internal impedance Z_0 of a pulse source isn't necessarily constant. In fact, it would not be unusual to find that Z_0 varied over wide limits during a single pulse period. But the preceding ideas are sufficiently general to give us a simplified approach to many circuit problems. And in many instances these ideas apply quite accurately.

1-3 Responses to current and voltage pulses. Suppose we apply a voltage pulse of known waveform to a basic circuit element--a resistor, an inductor, or a capacitor. We shall refer to the resulting pulse waveform of current that flows in the circuit element as the response of the element to the voltage pulse.

Similarly, if we send a current pulse of known waveform through a circuit element, we shall refer to the waveform of the resulting voltage drop across the element as the response of the element to the current pulse.

We shall for the time being consider for simplicity that a circuit element is made up of only pure resistance, pure inductance, or pure capacitance. We must realize, however, that in practice it is impossible to construct a resistor that is entirely free of inductive and capacitive effects. In fact, any one of the three basic circuit elements considered here must necessarily show at least a little of each of the other two of these characteristics--resistance, inductance, and capacitance. The degree to which the unwanted characteristics affect the pulse response is determined by the design of the circuit element and by the nature of the pulse waveform itself.

We shall consider only "linear" circuit elements--that is, resistors, inductors, and capacitors whose characteristics do not change with current or voltage.

1-4 Pulse responses of resistors. Suppose we apply a voltage pulse of known waveform across the terminals of a resistor whose resistance is R. Let

v represent the voltage of the pulse at any instant. The current i that flows at that instant can be found by Ohm's law:

$$i = v/r \qquad \text{Eq. (1-1)}$$

Since the current through the resistor is always proportional to the instantaneous applied pulse voltage, the shape of the current pulse through the resistor must be the same as that of the applied voltage pulse.

Similarly, if the signal applied to the resistor is a current pulse, the shape of the voltage pulse that appears across the resistor must be the same as that of the applied current pulse.

1-5 Back emf in an inductor. In the next paragraphs, we shall consider what must be the waveform and magnitude of the voltage pulse that is developed across the terminals of an inductor, in response to an applied current pulse through the inductor.

Consider an inductor whose inductance is L henrys. For simplicity, suppose for the moment that the inductor is entirely free of resistance and capacitance (although we cannot actually construct such an inductor). Let us think of what would happen if we sent a varying current through the inductor. These facts become apparent:

1. Since the inductor is presumably free of resistance and capacitance, any voltage drop caused by the varying current must result solely from inductive effects.

2. As we already know, the effect of inductance in a circuit is to develop an induced voltage whenever the current in the circuit is changed. The polarity of the induced voltage is such as to oppose the change in current.

3. The amount of induced voltage at any instant depends upon two things: (a) the rate of change of the current at that instant, in amperes per second, and (b) the amount of inductance in henrys.

Since the induced voltage tends to oppose the change in current, we call this induced voltage a back emf (or counter emf). And this back emf, appearing across the inductor terminals, is the response of the inductor to an applied current pulse.

The foregoing facts will be very useful to us in predicting the pulse response of an inductor.

1-6 Slope of a current or voltage waveform. We have just seen that the voltage response of an inductor to an applied current pulse is, at any instant, determined by (a) the rate of change of the current, and (b) the amount of inductance. Since we assume that the amount of inductance is fixed, let us think further of just what we mean by the rate of change of a current.

Consider the sawtooth current waveform shown in the graph of Fig. 1-5. In particular, consider the rising (positive-going) portion of the waveform, from point A to point B. Note that, in this rising portion of the waveform, the current rises from 10 milliamperes at point A to 50 milliamperes at point B on the graph. That is, between these two points, the current changes by 40 milliamperes.

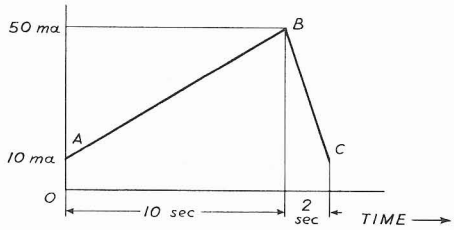

Fig. 1-5. A sawtooth current pulse. In the interval AB, the current rises at a constant rate of 4 milliamperes (0.004 ampere) per second. That is, the current has a rate of change $\frac{di}{dt}$ that is equal to 0.004 amperes per second. In the interval BC, the current falls at a constant rate of 20 milliamperes (0.02 ampere) per second. That is, the current has a rate of change $\frac{di}{dt}$ that is equal to -0.02 ampere per second.

We also note that the time interval that elapses between point A and point B is 10 seconds.

In summary, between points A and B:

1. The current rises through a range of 40 milliamperes.

2. And the time interval required for this change is 10 seconds.

Clearly, a rapid change in current is indicated on the graph by a steep portion of the waveform. That is, the current is changing most rapidly where the slope of the waveform is greatest. Thus we can consider the slope of a current waveform, in any given part of the waveform, as being the same as the rate of change of the current in that part of the waveform.

To calculate the slope of a pulse-current waveform, we divide the amount of current change that occurs during the interval in question by the time duration of the interval. In the waveform of Fig. 1-5, then, the slope of the current waveform, during the interval between points A and B, is $40 \div 10 = 4$ milliamperes per second (equivalent to 0.004 ampere per second). And since the current is increasing during this interval, we say that the slope is positive.

As a further example, consider the interval from point B to point C. Here the current decreases from 50 milliamperes to 10 milliamperes (a change of -40 milliamperes). And the time interval required for the change is 2 seconds. Thus the slope of the waveform, during the interval from point B to point C, is $-40 \div 2 = -20$ milliamperes per second (or -0.02 ampere per second). The minus sign in the result indicates that the current is decreasing during the interval in question.

If the waveform of Fig. 1-5 had been a voltage pulse, rather than a current pulse, we could similarly have calculated the slope of the pulse-voltage waveform over the intervals from point A to point B and from point B to point C. To do so, we would simply have divided the amounts of voltage change by the time intervals in seconds required for the changes. The resulting slopes of the voltage waveform would have then been expressed in volts per second.

1-7 Derivative of a voltage or current. We refer to the slope of a current or voltage waveform, at a given point on the waveform, as the derivative (rate of change) of the voltage or current at that point. The derivative of a current is indicated by $\frac{di}{dt}$. That is, $\frac{di}{dt}$ is a symbol for the rate of change of current i with respect to time t. Similarly, the derivative of a voltage is indicated by $\frac{dv}{dt}$ (or $\frac{de}{dt}$).

Let us not become involved here with the operations with derivatives that are presented in advanced mathematics. Instead, let us content ourselves with the simple graphical idea of the derivative based on the slope of a graph. This idea allows us to gain some insight into the operation of pulse circuits.

Note on the graph that if the derivative at a given instant is positive, this fact indicates that the voltage or current is increasing (becoming more positive) at that instant. A negative derivative indicates that the voltage or current is falling (becoming more negative). And if in a given part of a waveform the derivative is zero, then the graph of the voltage or current is horizontal in that part of the waveform (that is, the voltage or current has a zero rate of change).

You can check that in Fig. 1-5,

Between points A and B, $\frac{di}{dt} = 0.004$ ampere per second

and between points B and C, $\frac{di}{dt} = -0.02$ ampere per second

To make use of the ideas we have just learned, we remember that the response of an inductor to a current pulse is a voltage waveform whose amplitude at any instant is determined by the rate of change (derivative) of the current at that instant and by the amount of inductance in the inductor. This fact gives us an important relation for the voltage v across the inductor terminals:

$$v = L \frac{di}{dt} \qquad \text{Eq. (1-2)}$$

As a matter of fact, Eq (1-2) expresses the fundamental nature of inductance itself. In other words, it tells us that in every case, so far as inductance can be separated from other circuit properties, the voltage across a pure inductance is at every instant equal to the product of the inductance times the rate of change of the current.

As an example, suppose we apply a current waveform like that of Fig. 1-5 (redrawn in Fig. 1-6a) to a 300-millihenry inductor. Taking $L = 0.3$ henry,

we get from Eq. (1-2) the result that, between the instants identified by points A and B, the inductor voltage will be 0.3 × 0.004 = 0.0012 volt (or 1.2 millivolts). And between the instants identified by points B and C, the inductor voltage will be 0.3 × (−0.02) = −0.006 volt (or −6 millivolts). We have shown in Fig. 1-6b the resulting voltage response of a 300-millihenry inductor when the current of Fig. 1-6a flows through the inductor.

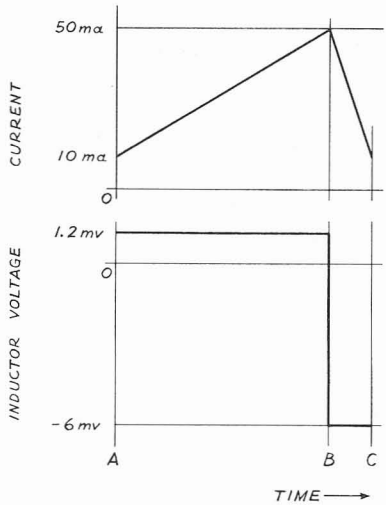

(a) The sawtooth current pulse of Fig. 1-5, redrawn.

(b) The pulse-voltage response of an inductor of 300 millihenrys (0.3 henry) to the current pulse of Fig. 1-6a. The voltage response of the inductor is always equal to $v = L\frac{di}{dt}$. Therefore in the interval AB the inductor voltage response is 0.3 x 0.004 = 0.0012 volt (1.2 millivolts). And in the interval BC the inductor voltage response is 0.3 x (-0.02) = -0.006 volt (that is, -6 millivolts).

Fig. 1-6

It would be wise to notice specifically that, in pulse work, we're now working with circuits where the waveform of the voltage is not necessarily the same as the waveform of the current. This situation is in contrast to that existing with sine-wave ac and with continuous dc.

1-8 Derivative at a single point on a waveform. Thus far we have considered a waveform that varies at a constant rate over an interval. For example, the waveform of Fig. 1-5 rises at a constant slope of 0.004 ampere per second over the entire interval from point A to point B, so that the graph follows a straight line over that interval.

But in what follows, we shall often need to think of the derivative of a voltage or current at a single point on the graph. And the graph might be a curve, rather than simply a straight or broken line. For example, in Fig. 1-7 we might want to know the derivative of the current (that is, the slope of the current waveform) at the point D on the diagram.

Our first step in calculating this instantaneous slope at point D is to draw a tangent line T to the curve at that point. For present purposes, we can say that this tangent line is simply a straight line that touches the curve at point D and at no other point in the immediate neighborhood of D.

Next we use the method of Sec. 1-6 to calculate the slope of a hypothetical voltage or current waveform that changes according to the tangent line T instead of following the actual pulse waveform. We consider this calculated slope of T to be the derivative of the actual voltage or current at the instant defined by the point D.

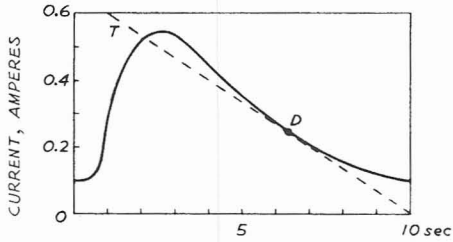

Fig. 1-7. Illustrating the derivative (instantaneous rate of change) at the point D on a current waveform. The straight tangent line T, drawn through point D, falls through a range of 0.6 ampere during an interval of 9 seconds. Therefore we say that at point D the current has a derivative $\frac{di}{dt}$ that is equal to $0.6 \div 9 = 0.067$ ampere per second.

For example, in Fig. 1-7 the tangent line T falls from 0.6 ampere at a point corresponding to a time of 1 second, to zero amperes at a point corresponding to a time of 10 seconds. Therefore at point D the current has a derivative equal to $-(0.6 - 0) \div (10 - 1) = -0.6 \div 9 = 0.067$ ampere per second.

1-9 Graph of the derivative of a voltage or current. Let us again consider the current pulse shown in Fig. 1-7. This waveform is redrawn in Fig. 1-8a. In the latter figure we have drawn tangent lines to the current graph at several lettered points. If we evaluate the derivative of the current (slope of the tangent line) at each of these points by the method of Sec. 1-8, we get the results shown in Table 1-1, as you can check.

TABLE 1-1

Point in Fig. 1-8a	Derivative of current (slope of tangent line)
A	0
B	+0.3
C	0
D	-0.067
E	0

In Fig. 1-8b we have graphed the derivative $\frac{di}{dt}$, including values taken from Table 1-1. Note that the height of the derivative curve shown in Fig. 1-8b is everywhere proportional to the derivative of the current whose waveform is shown in Fig. 1-8a.

1-10 Response of an inductor to a current pulse. Suppose we use a source of current pulses to drive a load consisting of an inductor that has negligible resistance and capacitance (Fig. 1-9). Recalling Eq. (1-2), we know that the response voltage v of the inductor at any instant will be equal to the

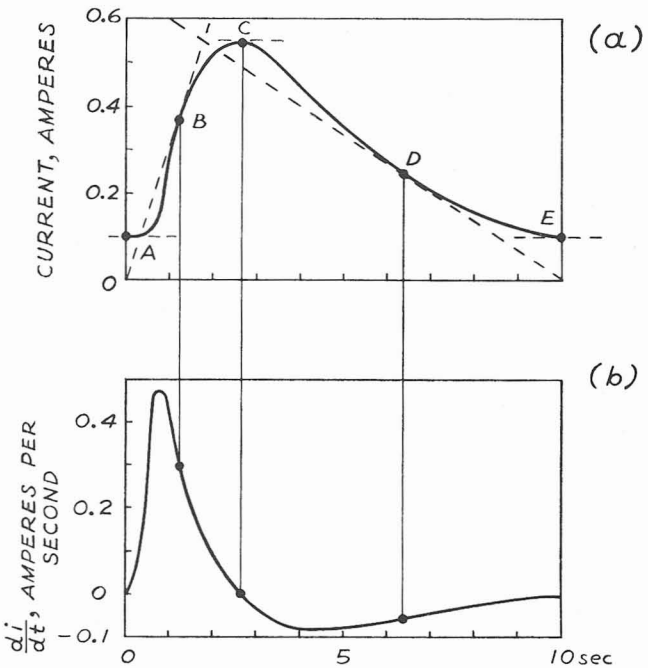

The current pulse of Fig. 1-7, redrawn. Here we have drawn tangent lines at various points A, B, C, etc., throughout the pulse-duration interval. And we have calculated the corresponding values of the derivative of the current (instantaneous rate of current change, $\frac{di}{dt}$) as shown in Table 1-1 in the text.

Graph of the derivative of the current pulse of Fig. 1-8a. At each instant, the height of the derivative graph of Fig. 1-8b is equal to the derivative (slope) of the current waveform of Fig. 1-8a. If we send the current pulse of Fig. 1-8a through an inductor of inductance L, we find the pulse-voltage response of the inductor by multiplying the height of the graph of Fig. 1-8b (at each instant) by L.

Fig. 1-8

inductance L multiplied by the derivative of the current ($\frac{di}{dt}$). Therefore, if the applied current pulse has the form of Fig. 1-8a, the response voltage will have the same shape as the derivative graph of Fig. 1-8b. In fact, Fig. 1-8b shows the actual response voltage waveform if we multiply the height of the curve at each point by L.

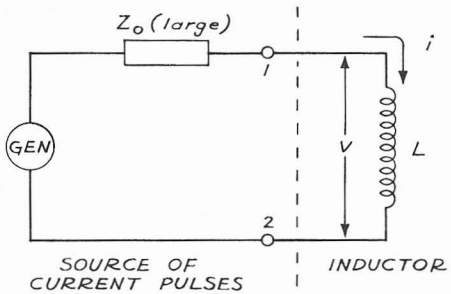

Fig. 1-9. Source of current pulses driving an inductive load.

Similarly, if we send a sine wave of current (Fig. 1-10a) through the inductor, the waveform of the voltage drop across the inductor will have a height at every instant equal to the product of the inductance L times the derivative of the current at that instant. Fig 1-10b shows the derivative of the current, plotted from the slopes of the tangent lines to the current curve of Fig. 1-10a. Thus the voltage drop across the inductor has the shape of the cosine curve of Fig. 1-10b.

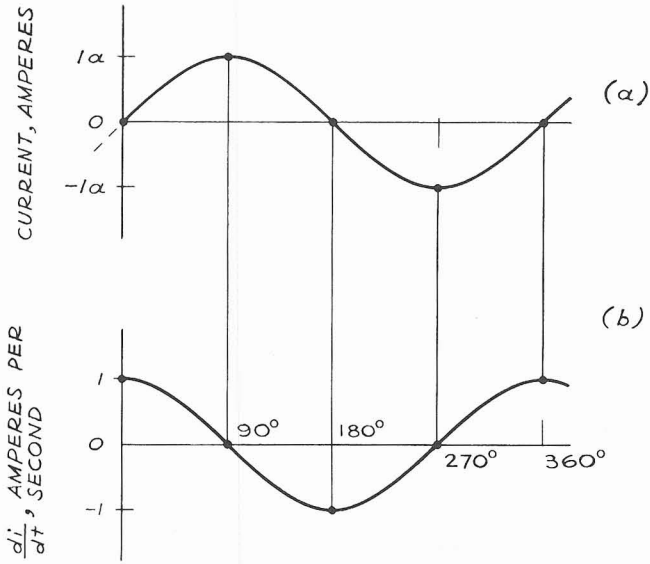

A sine wave of current.

Graph of the derivative of the current sine wave of Fig. 1-10a. If we send the current wave of Fig. 1-10a through an inductor of inductance L, we can find the voltage response of the inductor (voltage drop across the inductor) by multiplying the height of the graph of Fig. 1-10b (at each instant) by L.

Fig. 1-10

We see that, interestingly enough, when the current is at a maximum its rate of change is zero--so that the induced voltage is zero. On the other hand, when the current passes through zero its rate of change is at a maximum--so that the induced voltage is at a maximum. But this result simply bears out the fact that the voltage across the inductor terminals follows a sinusoidal curve (when the current is a sinusoidal wave), but that the voltage curve leads the current curve by 90 degrees--that is, the current lags the voltage by 90 degrees.

Figures 1-11 and 1-12 show the voltage-drop responses of an inductor to two other pulse waveforms. You can check that the voltage is at every instant proportional to the derivative of the current (slope of the current waveform) at that instant.

1-11 Response of an inductor to a voltage pulse; the slope problem reversed. In the preceding section, we considered what would happen if we applied a current pulse of known waveform to an inductor of negligible resistance and capacitance. In that case, the given quantity was the waveform of the current

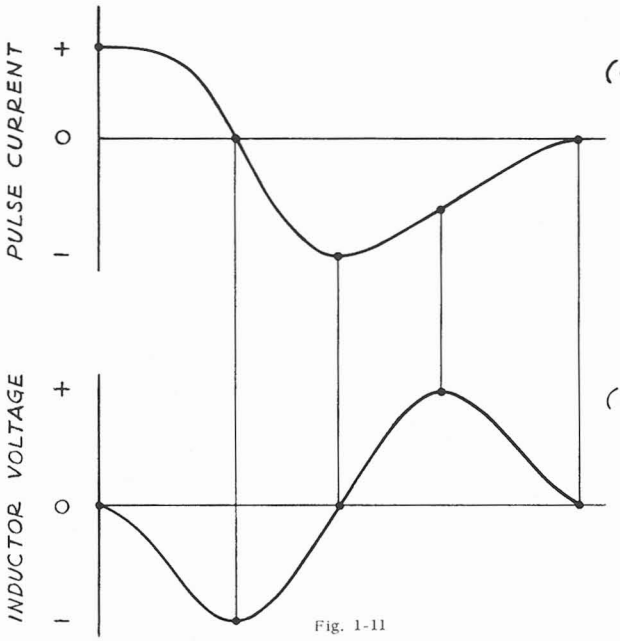

(a)

Another example of a current waveform.

(b)

Voltage response of an inductor to the current waveform of Fig. 1-11*a*. At each instant the inductor voltage response is proportional to the derivative (slope) of the current waveform of Fig. 1-11*a*.

Fig. 1-11

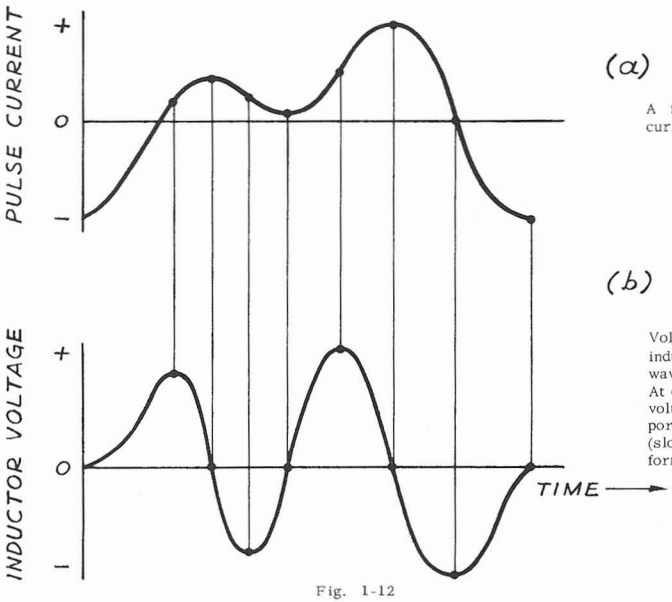

(a)

A further example of a current waveform.

(b)

Voltage response of an inductor to the current waveform of Fig. 1-12*a*. At each instant the inductor voltage response is proportional to the derivative (slope) of the current waveform of Fig. 1-12*a*.

Fig. 1-12

pulse, and the unknown quantity that we wanted to find was the waveform of the voltage pulse across the inductor. We found that at all times

$$v = L \frac{di}{dt} \qquad \text{Eq. (1-2)}$$

That is, the voltage across the inductor at every instant is equal to the product of the inductance L times the derivative of the current at that instant.

Now suppose we apply across the terminals of the inductor a voltage pulse of known waveform, and see how we can determine the waveform of the resulting current pulse through the inductor. Here, too, Eq. (1-2) applies--so that whatever current waveform flows in the inductor, we at least know that the graph of the derivative of the current waveform must have a shape like that of the applied voltage waveform. In fact, we can rewrite Eq. (1-2) as follows:

$$\frac{di}{dt} = \frac{1}{L} v \qquad \text{Eq. (1-3)}$$

Although Eq (1-3) doesn't tell you directly how much current i must flow at every instant, it does tell you how fast i is changing; and with this information you can sketch the current waveform. You can sketch the current curve by reversing the process you used in Secs. 1-9 and 1-10 to graph the voltage response of the inductor to an applied current waveform.

Here is how you can carry out this reverse process, to sketch the current pulse that will flow in an inductor in response to an applied voltage pulse:

1. Suppose, for example, that we apply the voltage waveform of Fig. 1-13a to an inductor. Select several points (A, B, etc.) along the horizontal axis of the voltage-pulse waveform, as shown. These points correspond to various instants in the pulse duration.

2. Determine the height of the given pulse (v volts) at each of the selected points. Divide each of these voltages by the inductance L of the inductor. Here, we assume that L is equal to 1 henry.

3. On the graph sheet for the proposed current waveform (Fig. 1-13b), locate points (A', B', etc.) corresponding to the instants selected in step 1. Draw a straight "tangent" line through each of these new points. Make the slope of the line through each point, in amperes per second, equal to the result found in step 2 for that point.

4. Sketch a new curve (Fig. 1-13b) such that, for each instant you selected in step 1, the curve is tangent to the appropriate line you drew in step 3 or to a straight line parallel to that line. This new curve is the graph of a current pulse that might be the response of the inductor to the applied voltage pulse.

If you now mentally go back through these steps in reverse order, you can see that the height of the original voltage pulse waveform at any instant is proportional to the slope of the resulting current pulse of step 4 at that instant. Thus Eq. (1-2), which describes the basic behavior of an inductor, is satisfied.

1-12 Integrals. A curve whose slope at every point is equal to the height of a given curve is called an integral curve to the given curve. This simply means that:

If the height of a curve A at all points is proportional to the slope (derivative) of a curve B, then another way of stating this fact is to say that the height of curve B is proportional to the integral of the quantity graphed in curve A.

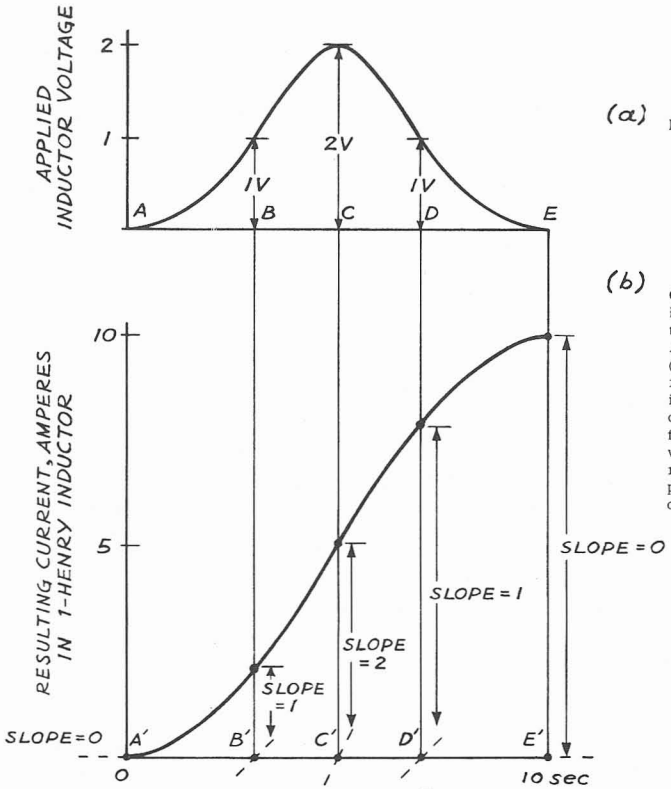

(a) Example of voltage pulse.

(b) Current response of a 1-henry inductor to the voltage pulse of Fig. 1-13a. At each instant the derivative (slope) of the current-response curve of Fig. 1-13b is proportional to the height of the applied-voltage waveform of Fig. 1-13a. In other words, the inductor current response at each instant is proportional to the integral of the applied voltage.

Fig. 1-13

As an example, we learned in Sec. 1-7 that the voltage across an inductor is at every instant proportional to the derivative of the current in the inductor. Therefore we can also say that the current in an inductor is at every instant proportional to the integral of the voltage across the inductor. For instance, the current pulse of Fig. 1-13b has a waveform determined by the integral of the applied voltage graphed in Fig. 1-13a. And conversely the applied voltage curve of Fig. 1-13a has a height proportional to the derivative of the current of Fig. 1-13b.*

*In mathematical symbols, we indicate the integral of a voltage by $\int v\,dt$ or by $\int e\,dt$. We indicate the integral of a current by $\int i\,dt$.

1-13 Dc component. As we have just noted, the slope (and therefore the shape) of an integral curve is determined by the height of some original curve. But this fact alone doesn't determine the height of the integral curve at any particular point. For example, in Fig. 1-14, curve a is some given original curve. And curve b is an integral curve to curve a--that is, the slope of curve b is everywhere determined by the height of curve a. But curves c and d are also integral curves to curve a. That is, the slopes of curves c and d are also everywhere determined by the height of curve a. Note that all of the illustrated integral curves (b, c, and d) have the same shape--but that their positions on the vertical scale are different.

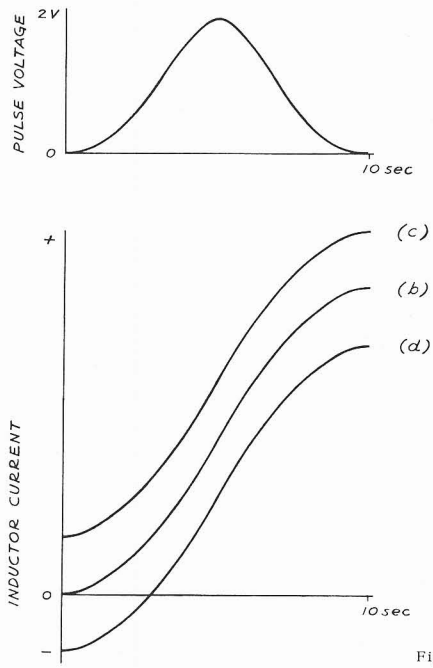

(a) The voltage pulse of Fig. 1-13*a*, redrawn.

b, *c*, *d*. Some of the infinite number of possible current-response curves that can result when we apply the voltage pulse of Fig. 1-14*a* to a 1-henry inductor. All of these current-response curves have the shape of the curve of Fig. 1-13*b*. But these current-response curves differ in their vertical locations on the graph. The various vertical locations simply indicate different amounts of steady (dc) current in the inductor.

Fig. 1-14

Actually, any one of an "infinite" number of curves might fill the requirement of being an integral curve to some given original curve. However, the slope of each integral curve at every point must be established by the height of the original curve--so that all integral curves must have the same shape.

If we applied a voltage pulse like curve a to a 1-henry inductor, the current response of the inductor might be either curve b, curve c or curve d. Or the current response might be any other curve having the same shape as curves b, c, and d--but positioned differently on the vertical scale.

Actually, the steady or dc current, if any, in the inductor establishes which of these current curves applies. This dc current exists in addition

to the varying pulse current, and is presumed to exist both before and after the varying pulse current flows. It is the constant "normal" value, perhaps zero, perhaps some other value, from which the actual pulse current varies. We mentioned this "normal" value in the first paragraphs of this chapter.

1-14 Responses of capacitors to applied pulses. In general, when we change the voltage across the terminals of a capacitor, we accomplish this voltage change by removing electrons from one plate of the capacitor and by adding electrons to the other plate. Thus, as far as the circuit external to the capacitor is concerned, the effect is in many ways the same as if we were sending a current through the capacitor. (But as we know, no actual current can flow through the capacitor since the dielectric material separating the plates is an insulator.)

This apparent current flowing in the capacitor is called a displacement current. It is this displacement current that we shall consider here.

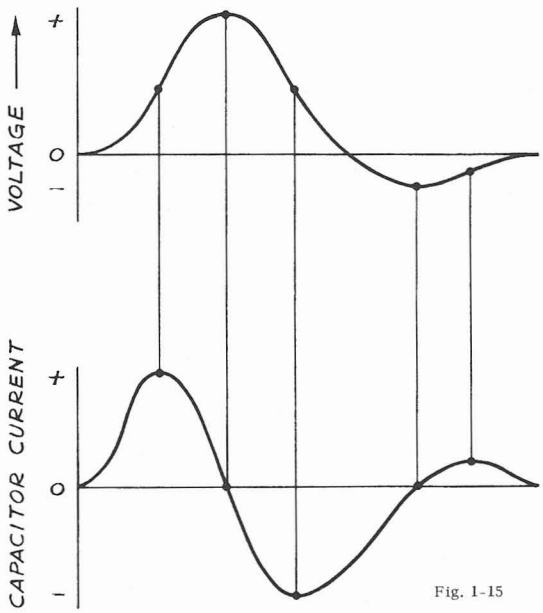

(a) Example of a voltage pulse.

(b) Current response of a capacitor to the voltage pulse of Fig. 1-15a. At each instant the capacitor current response is proportional to the derivative (slope) of the voltage waveform of Fig. 1-15a.

Fig. 1-15

It can be shown that the displacement current that flows in a capacitor at any instant is equal to the product of the capacitance in farads times the derivative (rate of change) of the applied voltage in volts per second. In symbols

$$i = C \frac{dv}{dt} \qquad \text{Eq. (1-4)}$$

Thus, when we apply a voltage pulse to a capacitor, the response of the capacitor is a displacement current that is at every instant proportional to

the slope of the voltage waveform at that instant. If, for example, we apply a voltage pulse having the waveform of Fig. 1-15a to a capacitor, the capacitor current will follow the waveform of Fig. 1-15b. You can check that the current is at every instant proportional to the derivative of the voltage.

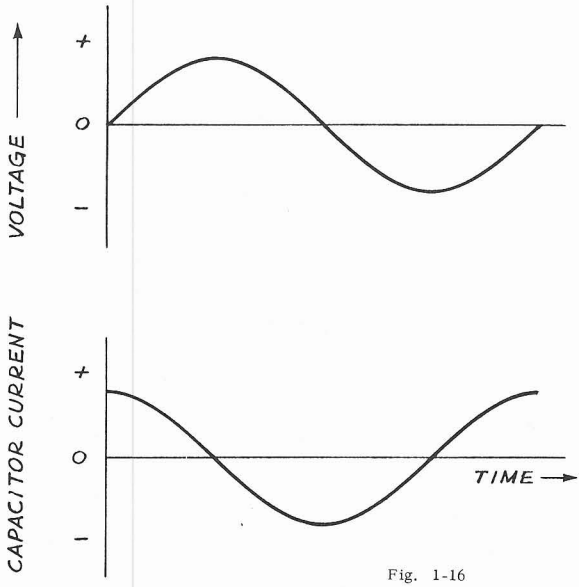

(a)

A sine wave of voltage.

(b)

The current response of a capacitor to the voltage sine wave of Fig. 1-16a. At each instant the capacitor current response is proportional to the derivative (slope) of the voltage waveform of Fig. 1-16a.

Fig. 1-16

As a further example, if we apply a sine wave of voltage (Fig. 1-16a) to a capacitor, the waveform of the current in the capacitor will have a height at every instant equal to the product of the capacitance times the derivative of the voltage. Here, too we can draw tangent lines at various points on the applied-voltage waveform of Fig. 1-16a. Then we can use the slopes of these tangent lines to calculate the derivative of the applied-voltage waveform at various instants. Then we can find the capacitor current at any instant by multiplying the capacitance times the derivative of the applied voltage. Fig. 1-16b shows the resulting capacitor-current waveform. This result bears out the fact that the current in the capacitor follows a sinusoidal curve (when a sine wave of voltage is applied)--but that the current leads the voltage wave by 90 degrees.

Conversely, when we apply a current pulse to a capacitor, the voltage drop across the capacitor will have a pulse waveform whose slope is

$$\frac{dv}{dt} = \frac{1}{C} i \qquad \text{Eq. (1-5)}$$

In other words, the response of the capacitor to a current pulse is a voltage waveform corresponding to an integral curve of the given current pulse. Thus, to sketch the capacitor-voltage waveform that results from a given

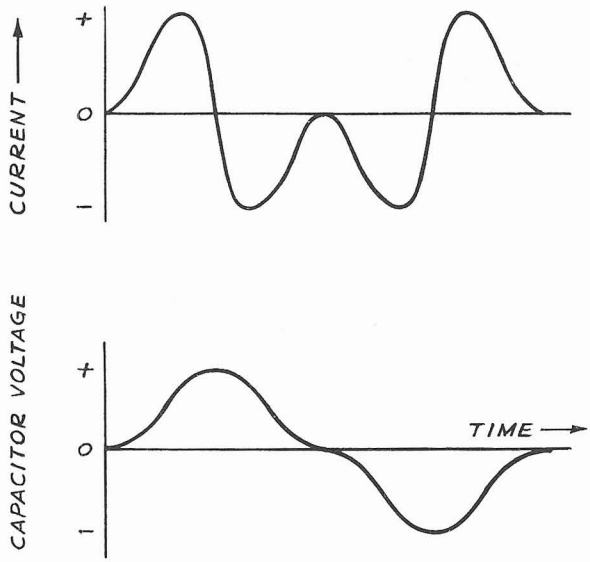

(a) Example of a current pulse.

(b) Voltage response of a capacitor to the current pulse of Fig. 1-17*a*. At each instant the derivative (slope) of the voltage-response curve shown in Fig. 1-17*b* is proportional to the height of the current pulse shown in Fig. 1-17*a*. In other words, the capacitor voltage response at each instant is proportional to the integral of the applied current. The actual vertical location of the voltage-response curve will be different if the capacitor has been charged to some dc voltage before the current pulse starts.

Fig. 1-17

capacitor-current waveform, we need only sketch an integral curve of this given current waveform. To do this, we can use the method we found in Sec. 1-11 (where we sketched inductor-current waveforms that were integral curves of given inductor-voltage waveforms). If, for example, we apply the current pulse of Fig. 1-17a to a capacitor, the resulting voltage drop across the capacitor might have the waveform of Fig. 1-17b (or any similar waveform above or below the waveform of Fig. 1-17b). The dc voltage, if any, to which the capacitor was charged before the start of the current pulse establishes the vertical location of the actual current waveform.

Chapter 2

SQUARE-WAVE TESTING

A basic problem in pulse work is that of making more or less rapid changes in the currents or voltages in electric circuits. We remember that every circuit must contain at least a little resistance, capacitance, and inductance--whether or not we intentionally connect R, C, or L in the circuit. Thus our problem of changing a current or voltage involves things like changing an inductor current or changing a capacitor voltage--always with at least a little of all three properties (R, C, and L) present.

2-1 Square-wave testing. An excellent measure of the pulse response of a circuit is its response to a step function. In other words, we apply to the circuit under test a voltage or a current that changes very rapidly (ideally, in zero time) from one value to another. Then we can observe the circuit response on an oscilloscope.

As an example, if we suddenly connected a battery to the input terminals of an amplifier, and observed the resulting output waveform on an oscilloscope, we would be observing the response of the amplifier to an input step function. Step-function waveforms may be either positive-going (Fig. 2-1a) or negative-going (Fig. 2-1b).

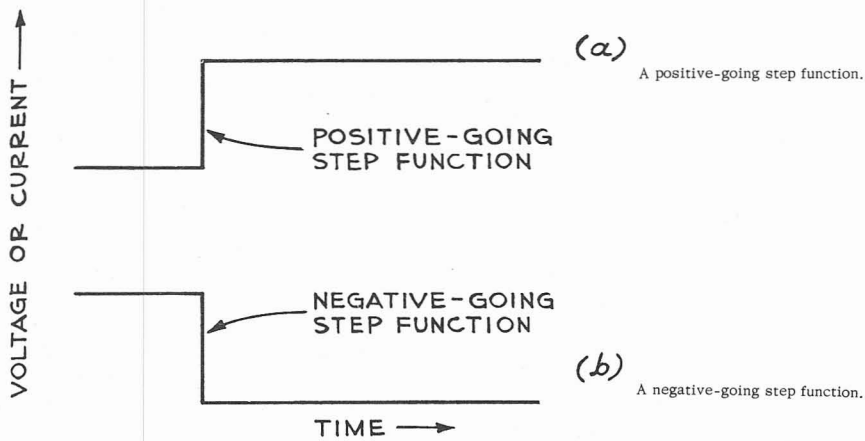

Fig. 2-1

In practice, we generally find it convenient to use square waves rather than simple step functions. A positive-going square-wave pulse (Fig. 2-2a) can be considered as a positive-going step function followed by a delayed negative-going step function. And a negative-going square-wave pulse (Fig. 2-2b) can be considered as a negative-going step function followed by a delayed positive-going step function.

In most applications we apply periodic square waves to the input of the device whose pulse response we are testing. In this way we get repetitive output waveforms in response, so that we have a good view of the output waveform on an oscilloscope.

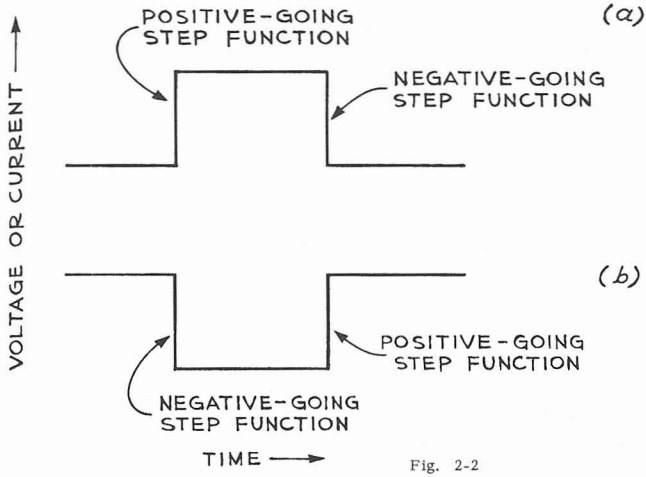

(a) A positive-going square wave consists of a positive-going step function followed by a delayed negative-going step function.

(b) A negative-going square wave consists of a negative-going step function followed by a positive-going step function.

Fig. 2-2

Here we shall consider only circuits that operate in a linear manner. That is, we shall asume that our resistors, inductors, and capacitors have values that don't change with current or voltage; and that our tubes operate in linear regions of their characteristic curves. If two circuits operate in a linear manner, and if these circuits have identical responses to square-wave input pulses, then we can expect these two circuits to give responses similar to each other when we feed other waveforms (sawtooth, spike, etc.) into the circuits.

Let's note that <u>we can't actually generate a theoretically perfect step function of voltage.</u> For every circuit must contain at least a small amount of capacitance--and Eq. (1-5) tells us that

$$\frac{dv}{dt} = \frac{1}{C} i$$

Now if the voltage across a capacitance jumps instantly (that is, in zero time) from one value to another, then the rate of change of the voltage (dv/dt) must be "infinite" --greater than any number we can think of. Then, according to the above equation, the current i must therefore also be infinite. And in practice we can't generate an infinite current. Therefore <u>the voltage across a capacitance can't change instantly from one value to another.</u>

Similarly, <u>we can't generate a theoretically perfect step function of current.</u> For every circuit must contain at least a small amount of inductance--and Eq. (1-3) tells us that

$$\frac{di}{dt} = \frac{1}{L} v$$

Now if the current in an inductance jumps instantly from one value to another, then the rate of change of the current (di/dt), must be infinite. Then, according

to the above equation, the voltage v must therefore also be infinite. And in practice we can't generate an infinite voltage. Therefore the current in an inductance can't change instantly from one value to another.

But we can generate "step" functions of voltage or current that rise just as rapidly as we need them to--if we are willing to expend the effort needed to devise the required circuits. Nevertheless, a voltage or current can't change instantly from one value to another.

To lead into the field of square-wave testing, let us consider first the responses of simple RL and RC circuits when we apply step functions to them.

2-2 The RL circuit. As an example of the problem of making rapid changes in the current in an inductor, consider the circuit of Fig. 2-3. Here R includes the resistance of the inductor as well as any other series resistance in the circuit. If we close the switch S_1 we apply the steady battery voltage V to the series RL combination, so that a current i flows in R and L. Let us see how this current varies after we close the switch.

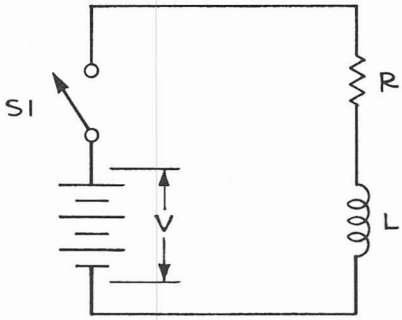

Fig. 2-3 When we close switch S_1 we apply a positive-going voltage step function to the series RL circuit. The amplitude of this step function is the dc battery voltage V.

a. Operation of a resistanceless circuit. Let us first imagine what would happen in a hypothetical case where the total resistance R in the circuit of Fig. 2-3 is equal to zero--that is, the terminals of R are short-circuited. At the instant when we close switch S_1, we thus apply a step of voltage (Fig. 2-4a) directly across the inductor terminals. The response of the inductor to this voltage step is a current (Sec. 1-11) having a rate of change or derivative equal to

$$\frac{di}{dt} = \frac{1}{L} v \qquad \text{Eq. (2-1)}$$

In the present case, the inductor voltage v is simply the steady battery voltage V at all instants after we close S_1. Thus, in the present case,

$$\frac{di}{dt} = \frac{V}{L} \qquad \text{Eq. (2-2)}$$

Therefore the current would rise at a constant rate equal to $\frac{V}{L}$ amperes per second, as shown in Fig. 2-4b.

b. Circuit operation with resistance present. The preceding discussion tells us what would happen if there were no resistance in the circuit. But in a practical circuit, there will be some resistance, whether the resistance is undesirable or whether we intentionally connect a resistor in the circuit. Let us consider the operation of the circuit when resistance is present.

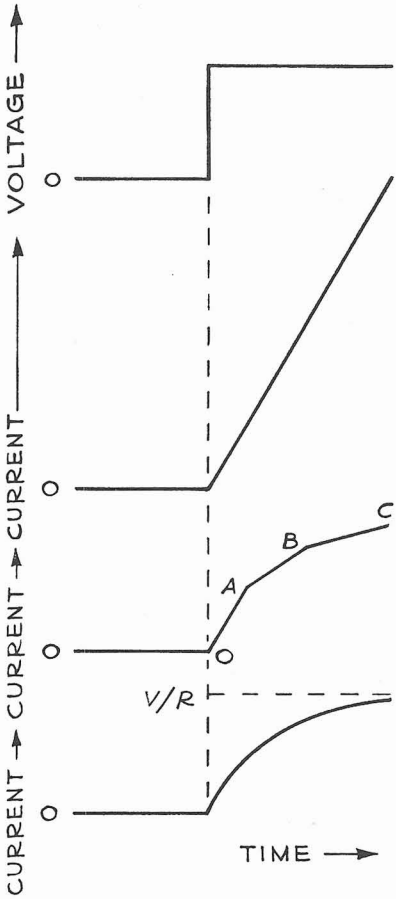

(a) The positive-going voltage step function that we apply to the RL circuit of Fig. 2-3 when we close the switch S_1.

(b) The current that flows in the circuit of Fig. 2-3 in response to the voltage step function of Fig. 2-4a, when R is hypothetically equal to zero. Since the applied voltage (Fig. 2-4a) is constant after we close switch S_1, the slope (derivative) of the resulting current (Fig. 2-4b) is constant in accordance with Eq. (2-1).

(c) An approach to the actual current in the circuit of Fig. 2-3 when we take the resistance R into account. In the interval OA the current is still small. Therefore we neglect the voltage drop across R and assume that the current rises according to Fig. 2-4b. In interval AB we take into account a certain amount of voltage drop across R so that the current in L rises less rapidly. In interval BC we take into account a still greater voltage drop across R so that the inductor current rises even less rapidly.

(d) The actual current in the circuit of Fig. 2-3. The current doesn't actually increase in steps, but rises according to a smooth curve.

Fig. 2-4

When we close S_1, we apply the voltage step shown in Fig. 2-4a to the series combination of L and R. For the first little while, the current in this RL combination tends to rise along the straight-line graph of Fig. 2-4b. (During these early instants of current rise, the current itself is still small, so that the voltage drop across R is small. Thus during the early part of the current rise, nearly the full battery voltage V is applied to L.) For simplicity, let us assume that the full battery voltage V is applied to L alone for some short interval of time--say, until the current has reached the value indicated at point A in Fig. 2-4c.

Let us consider that at the instant identified by point A, the current has increased to a value such that we have to take into account the voltage drop across R. The voltage across the inductor itself will now be less than the battery voltage V by the amount of the voltage drop across R. Let us call this reduced inductor voltage V_1. If we could assume that the inductor voltage remained constant at the new value V_1 volts for a short interval, then during that short interval the current would rise at a reduced rate equal to V_1/L amperes per second, in accordance with Eq (2-2). This rise at the reduced rate is indicated between points A and B in Fig. 2-4c.

Similarly, suppose at point B the current is enough greater to make us take into account the fact that the voltage drop across R has increased even further. This greater drop across R reduces the inductor voltage even further. Call the reduced inductor voltage V_2. Assume that during the interval between points B and C the inductor voltage remains constant at the value V_2 volts. Then during the interval between points B and C, the current rises at a new rate V_2/L amperes per second in accordance with Eq. (2-2).

In an actual circuit, the voltage drop across R doesn't increase in steps. Instead, the voltage drop across R starts to increase just as soon as the current begins to flow. And even an infinitesimal current increase causes a corresponding tiny increase in voltage drop across R and a resulting small decrease in the voltage applied to the inductor. As a result the current in an actual inductor doesn't change abruptly as shown at points A and B in Fig. 2-4c. Instead, the actual current rises along a smooth curve toward its "final" value as shown in Fig. 2-4d. You are doubtless familiar with the form of this final curve.

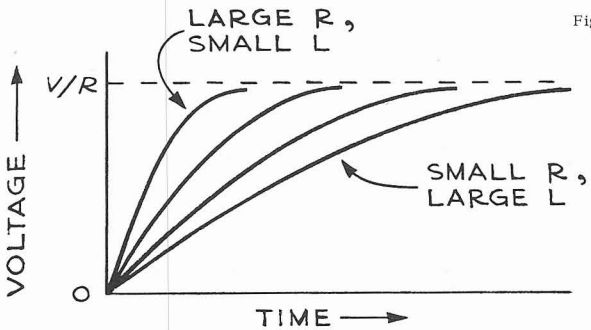

Fig. 2-5 When we apply a voltage step function to a series RL circuit, the current follows the given general waveform of Fig. 2-4d, regardless of the values of R and L. But the steepness of the current waveform depends upon the ratio of R to L.

A word is in order about the "final" value approached by the current. A pure inductance has no effect on a steady dc current. Therefore the "final" value of the current will be simply the value given by Ohm's law--that is, V/R amperes.

2-3 Time constant. If, in Fig. 2-3, we should replace the original values of L and R with new values, we would still find the current rising according to a curve having the same general form as that of Fig. 2-4d. But with

large R and small L, we would see much steeper curves. And with small R and large L, the curves would have long, gentle slopes. (See Fig. 2-5.)

It is handy to compare two such curves in terms of numbers. We do this by considering how long it would take the current to reach its "final" value if it continued to rise at its starting rate. This idea is illustrated by the broken line in Fig. 2-6. It turns out, as explained in books more mathematical than this one, that the broken line reaches the "final" value after a period of time T seconds that is equal to the inductance L in henrys divided by the resistance R in ohms. We call this time T the time constant of the RL circuit. Thus the time constant is

$$T = \frac{L}{R} \qquad \text{Eq. (2-3)}$$

It can be shown that after an interval T seconds (1 time constant) the actual current i will have gone through 63.2 percent of the change toward its "final" value.

2-4 Other curves. We have been considering the way that the current in an RL circuit rises from an initial value of zero to some other value. For example, Fig. 2-7a shows how the current in a certain RL circuit might rise from zero toward a "final" value of 20 milliamperes.

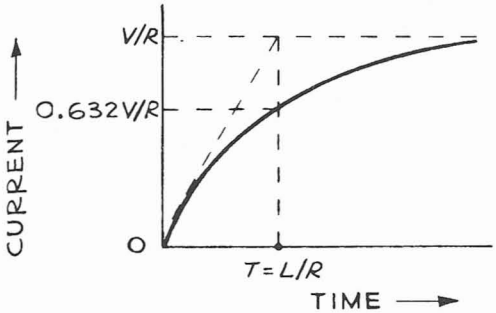

Fig. 2-6 If, in response to a voltage step function, the current in an RL circuit continued to rise at the starting rate (sloping broken line), the current would reach its final value V/R after an interval T that is equal to L/R. We refer to T as the time constant of the circuit. During the interval T the actual current rises to 63.2 percent of the "final" current V/R.

But these same general ideas apply when the initial current is not zero. For example, suppose we have a steady current of 10 milliamperes flowing in an RL circuit. And suppose that at some instant we abruptly increase the emf in the circuit so that the current will rise toward a new value of 30 milliamperes. The manner in which the current will rise is indicated by Fig. 2-7b. Note that the form of the current curve is the same as that of Fig. 2-7a.

Similar considerations apply to a falling current. Suppose we have an RL circuit in which a given steady current is already flowing. If we abruptly reduce the emf in the circuit to zero (while still leaving the circuit closed), the current will fall toward zero according to the curve of Fig. 2-7c. Note that this curve is an inverted form of the curve of Fig. 2-7a.

2-5 The *RC* circuit. Consider the circuit of Fig. 2-8. Suppose we close the switch S_1 at a given instant so that the voltage v across the capacitor C rises toward a fixed battery voltage V. As soon as the capacitor is charged to even a small voltage, this capacitor voltage opposes the battery voltage. The effect is to reduce the amount of charging current that flows into the

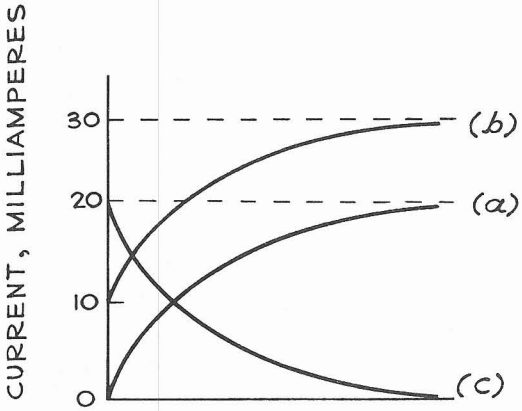

Fig. 2-7 When we apply a voltage step function to a series *RL* circuit, the current follows a given type of curve--whether the original current is zero (curve a), or whether the original current is, say, 10 milliamperes (curve b), or whether the current drops toward zero from some greater value, say, 20 milliamperes (curve c).

capacitor. Thus the charging of the capacitor continues at a reduced rate. And throughout the charging operation, the rising capacitor voltage v offers a continuously increasing opposition to the battery voltage V, so that the charging current becomes less and less. As a result, the capacitor voltage rises more and more slowly.

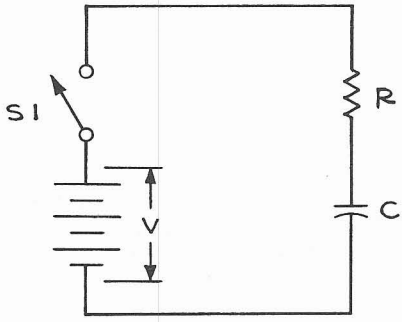

Fig. 2-8 When we close the switch S_1 we apply a positive-going voltage step function to the series *RC* circuit. The amplitude of the step function is the battery voltage V.

If we wish, we can approximate the graph of the actual capacitor voltage v by mentally breaking the charging period up into brief intervals, just as we did in Fig. 2-4c when we studied the rise of current in an *RL* circuit. But in the final analysis the capacitor voltage begins to oppose the battery voltage just as soon as the capacitor receives even a very small charge. And the smallest increase in charge causes a tiny increase in opposition to the charging current. Thus the capacitor voltage actually rises according

to the smooth curve of Fig. 2-9. Note that the form of the capacitor-voltage curve of Fig. 2-9 is similar to that of the inductor-current curve of Fig. 2-4d.

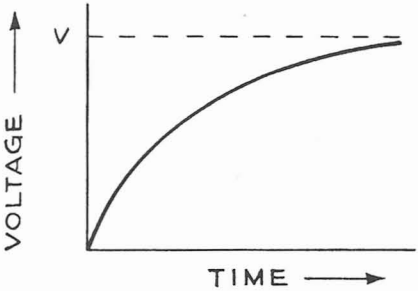

Fig. 2-9 After we close the switch S_1 in Fig. 2-8 the capacitor voltage rises according to the curve of Fig. 2-9. We can deduce this actual curve from a series of hypothetical straight-line capacitor-voltage changes--in the same way that we arrived at the inductor-current graph of Fig. 2-4d.

If, in Fig. 2-8, we should replace the original values of C and R with new values, we would still get charging curves having the same general form as that of Fig. 2-9. But with small R and C, we would see much steeper curves. And with large R and C, the curves would have long, gentle slopes. (See Fig. 2-10.) We define the time constant of the RC circuit of Fig. 2-8 as the

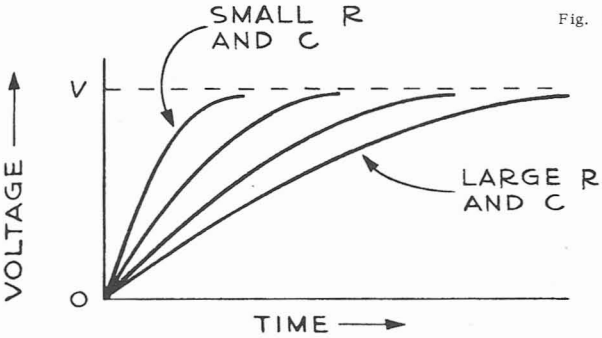

Fig. 2-10 When we apply a voltage step function to a series RC circuit, the current follows a given general waveform regardless of the values of R and C. But the steepness of the current waveform depends upon the product of R and C.

interval T seconds required for the capacitor voltage to reach its "final" value V if it continued to rise at its starting rate. This idea is illustrated by the broken line of Fig. 2-11. It turns out that the time constant T is equal to the product of R in ohms times C in farads. Thus the time constant is

$$T = RC \qquad \text{Eq. (2-4)}$$

In pulse work, it would perhaps be more convenient to say that the time constant of an RC circuit, expressed in microseconds, is equal to the product of R in megohms times C in micromicrofarads.

It can be shown that after an interval T seconds (1 time constant) the actual voltage v across the capacitor will have gone through 63.2 percent of the change toward its "final" value.

We have been considering the way that the capacitor voltage rises from an initial value of zero to some other value. For example, Fig. 2-12a shows how the voltage across a capacitor in a certain *RC* circuit might rise from zero toward a "final" value of 100 volts.

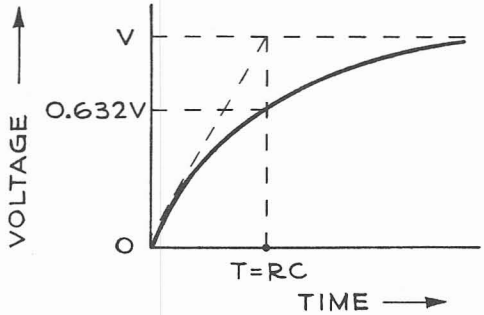

Fig. 2-11 If, in response to a voltage step function, the capacitor voltage in a series *RC* circuit continued to rise at the starting rate, the capacitor voltage would reach its final value *V* after an interval *T* that is equal to *RC*. We refer to *T* as the time constant of the circuit. During the interval *T* the actual capacitor voltage rises to 63.2 percent of the "final" capacitor voltage *V*.

But these same general ideas also apply when the initial capacitor voltage is not zero. For example, suppose the capacitor in a series *RC* circuit were initially charged to 20 volts. And suppose that at some instant we abruptly apply an external voltage of 120 volts to the terminals of the *RC* circuit, so that the capacitor voltage rises toward a new value of 120 volts. The manner in which the capacitor voltage will rise is indicated by Fig. 2-12b. Note that the form of the voltage wave is the same as that of Fig. 2-12a.

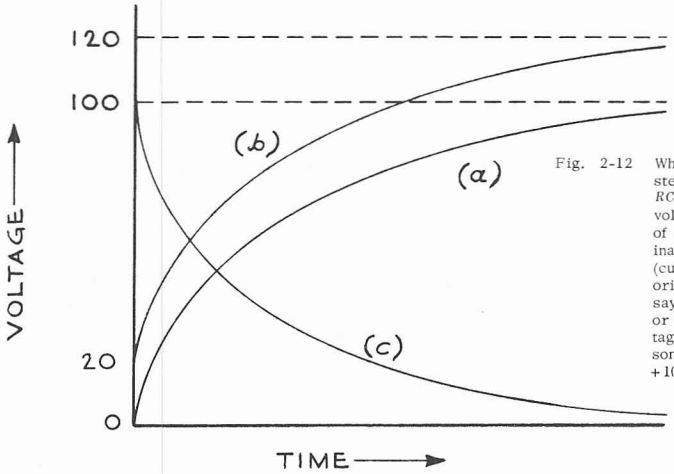

Fig. 2-12 When we apply a voltage step function to a series *RC* circuit, the capacitor voltage follows a given type of curve--whether the original capacitor voltage is zero (curve a), or whether the original capacitor voltage is, say, +20 volts (curve b), or whether the capacitor voltage drops toward zero from some greater value, say, +100 volts (curve c).

Similar considerations apply to a decreasing capacitor voltage. Suppose we have an *RC* circuit in which the capacitor voltage has a certain value. If we close the circuit upon itself so that the capacitor discharges through

the resistor, the capacitor voltage will fall toward zero according to the curve of Fig. 2-12c. Note that this curve is an inverted form of the curve of Fig. 2-12a.

2-6 Interstage-coupling system. Consider the familiar interstage-coupling circuit of Fig. 2-13.* Here an input signal is applied to the grid of V_1. This signal appears in an amplified form at the plate of V_1, and is "coupled" through a circuit consisting of C_1 and R_g to the grid of a succeeding voltage-amplifier tube V_2. Let us study the way in which this coupling circuit operates.

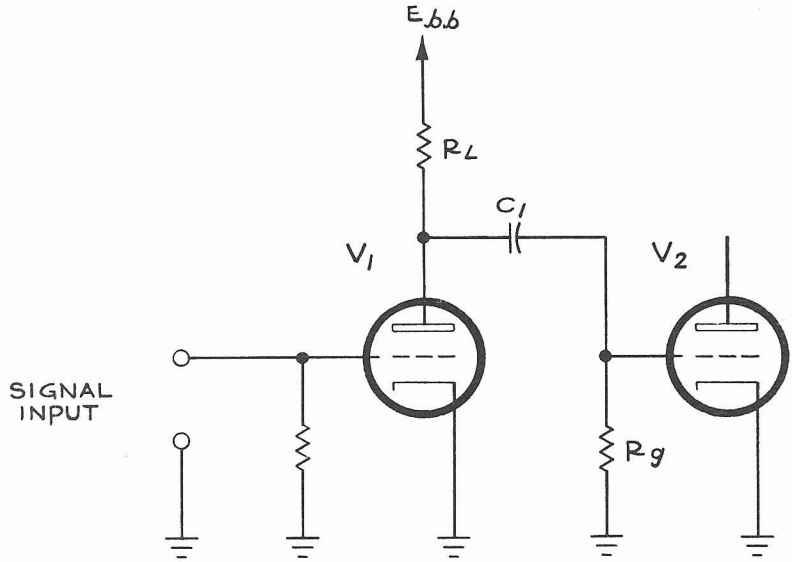

Fig. 2-13 Interstage-coupling system. The input signal voltage we apply to the grid of V_1 appears, amplified and with reversed polarity, at the plate of V_1. The coupling capacitor C_1 couples this output signal (that appears at the plate of V_1) to the grid of V_2.

Suppose first that no signal is being applied to the grid of V_1 (that is, the grid of V_1 is held at some fixed dc voltage). Then a given steady dc plate current will flow in V_1. And as a result of this steady plate-current flow, a given voltage drop will exist across the plate-load resistor R_L. Therefore the voltage at the plate of V_1 will have some given steady value.

If we now change the voltage at the grid of V_1, the plate current will undergo a corresponding change. For instance, if we make the grid more negative, the plate current will correspondingly be reduced. Therefore the voltage

*For simplicity, we omit here any provision for the required fixed bias voltage that keeps the average grid voltage negative with respect to the cathode voltage.

drop across R_L will decrease, and the voltage at the plate of V_1 will correspondingly rise to a new value closer to the plate-supply voltage E_{bb}.

Note that if the input signal makes the grid of V_1 more negative, for example, then the output voltage at the plate of V_1 becomes more positive--and vice versa. That is, the polarity of the output signal is reversed with respect to that of the input signal. Furthermore, the output signal-voltage change at the plate is ordinarily greater than the original input signal-voltage change applied to the grid.

The large value of R_g in series with C_1 holds to a very small value the displacement current that tends to flow in C_1 as a result of the plate-voltage change. Since only a small value of displacement current can flow in C_1, the voltage across C_1 can change only slightly in any short period of time. Thus, for rapidly changing signal waveforms, the changing signal voltage at the right-hand terminal of C_1 will be essentially the same as that appearing at the plate of V_1. Therefore, for rapidly changing waveforms, the changing signal applied to the grid of V_2 will be basically an inverted and amplified form of the waveform applied to the grid of V_1.

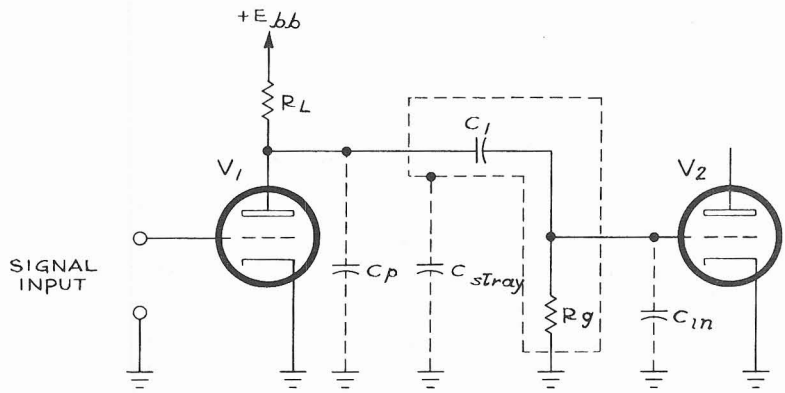

Fig. 2-14 Illustrating the undesirable but unavoidable shunt capacitances that exist in the circuit of Fig. 2-13. Here C_p is the plate-to-ground capacitance of V_1 ; C_{in} is the input capacitance of V_2, and C_{stray} is the stray capacitance to ground of the wiring and components.

2-7 Shunt capacitance. In the next sections, we shall consider some of the distortions that might occur to a signal on its way from the grid of V_1 to the grid of V_2. To do this, we note the various shunt capacitances that are unavoidably present between the signal path in Fig. 2-13 and the reference ground point. These capacitances are indicated in Fig. 2-14. C_p is the plate-to-ground capacitance of V_1; C_{stray} is the stray capacitance to ground of the wiring and components; and C_{in} is the input capacitance of V_2.

In Fig. 2-15 we have redrawn the circuit of Fig. 2-14. In this new drawing we have lumped together the various shunt capacitances C_p, C_{stray}, and C_{in},

referring to their total effective capacitance as C_2. This rearrangement will simplify our study of the performance of the circuit.

2-8 Leading edge of an amplified square wave. In Fig. 2-15, suppose we apply to the grid of V_1 an input signal consisting of a negative-going square-wave voltage pulse (Fig. 2-16a). Let us consider the operation of V_1 and the rest of the circuit in transmitting this pulse to the grid of V_2.

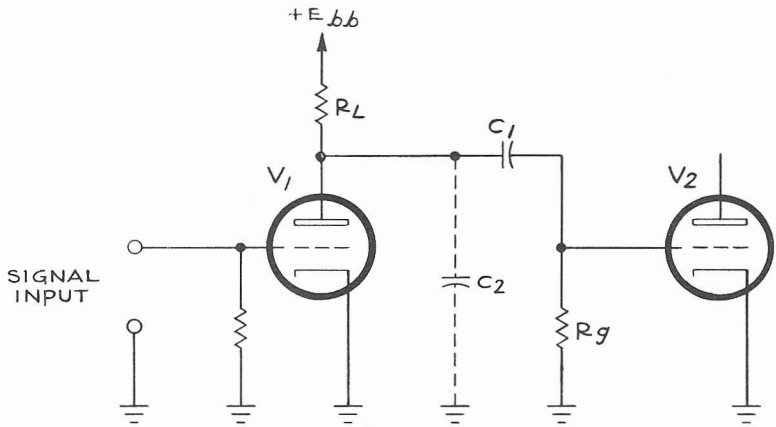

Fig. 2-15 Simplified illustration of the undesirable but unavoidable shunt capacitances shown in Fig. 2-14. Here C_2 represents the sum of C_p, C_{in}, and C_{stray} of Fig. 2-14.

During the interval from point A to point B on the input-signal waveform, the signal source holds the grid of V_1 at some fixed potential, so that during this interval the plate current of V_1 will have a given fixed value I_1 (Fig. 2-16b). As a result, during the interval from A to B the voltage (Fig. 2-16c) at the plate of V_1 will have a value E_1 that is less than the plate-supply voltage E_{bb} by the amount of the voltage drop $I_1 R_L$ that exists across the plate-load resistor. The unavoidable shunt capacitance C_2 will therefore be charged to this voltage E_1. Note that the voltage across C_2 is actually the signal output voltage at the plate of V_1.

When the input signal makes the grid of V_1 more negative (at the instant identified by point B in the figure), this negative excursion of the signal voltage causes the plate current of V_1 to be reduced. For the present, suppose that at instant B this input signal makes the grid of V_1 so negative that the plate current is completely cut off. In effect, then, at instant B the tube V_1 is removed from the circuit. And we have a situation where C_2 was originally charged to a voltage E_1, but where C_2 is now connected through a resistance R_L to a source of a higher voltage E_{bb}. That is, there exists an RC circuit (Sec. 2-5) whose time constant is $R_L C_2$, and the voltage across the capacitance C_2 will rise from E_1 toward E_{bb} according to a curve like that of Fig. 2-16c. This voltage rise is the output signal from V_1 that results from the negative-going leading edge of the input square wave. This signal is coupled through C_1 to the grid of V_2.

We see, therefore, that no matter how rapidly we change the input signal voltage in a negative direction, the output signal voltage at the plate of V_1 cannot rise more rapidly than is indicated by a capacitance-charging curve corresponding to a time constant of $R_L C_2$. However, in a later chapter we shall consider some changes that can be made in the circuit of Fig. 2-13 to increase the rate at which the output signal voltage can change.

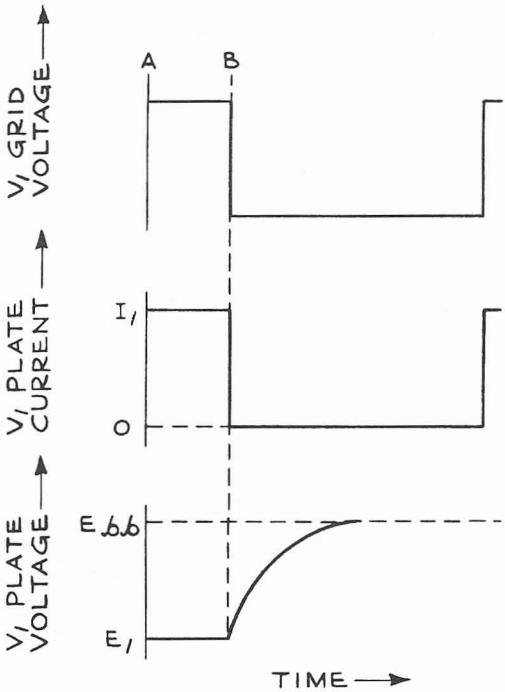

(a) A negative-going square-wave signal voltage we can apply to the input of the amplifier of Fig. 2-15, to analyze the response of the amplifier.

(b) Graph showing how the plate current in V_1 of Fig. 2-15 varies in response to the input signal of Fig. 2-16a. In this case, the input signal (Fig. 2-16a) makes the grid of V_1 sufficiently negative at instant B to cut off the plate current in V_1.

(c) Output signal voltage at the plate of V_1 when we apply the input signal of Fig. 2-16a to the grid of V_1. The unavoidable shunt capacitance C_2 in the coupling system (Fig. 2-15) prevents the output signal voltage at the plate of V_1 from rising abruptly. Instead, this V_1 plate signal voltage rises according to a capacitor-charging curve (see also Fig. 2-9). The time constant of the circuit involving C_2 and R_L establishes the steepness of the V_1 plate output signal-voltage curve of Fig. 2-16c.

Fig. 2-16

Thus far in this section, we have assumed that the amplitude of the negative-going input square wave was large. In fact, we have assumed that the input signal was large enough to cut off the plate current of V_1 at instant B. Now suppose that, instead of this original large-amplitude signal, we apply to the grid of V_1 a smaller negative-going square-wave voltage (Fig. 2-17a). Here at instant B the plate current in V_1 isn't cut off, but is merely reduced (Fig. 2-17b) from its original value I_1 to a new lower value I_2. This plate-current change reduces the voltage drop across R_L. Thus the output voltage (Fig. 2-17c) at the plate of V_1 tends to rise, not toward E_{bb}, but toward some voltage E_2 that is less positive that E_{bb}. Here we have a situation where C_2 was originally charged to a voltage E_1, but where it now tends to charge through R_L to a new voltage E_2. The voltage across C_2 --actually, the output voltage of V_1 --will rise toward E_2 according to a curve like that of Fig. 2-17c. Thus the operation is essentially similar to the operation we observed for the original large input signal.

2-9 Risetime. We often need to compare the steepness of the leading edge of a "square" wave with that of a second "square" wave. And we need to express this comparison in terms of numbers. This need brings us to the concept of risetime. The risetime of a waveform is taken as the time required for the rising edge to rise from 10 percent of the peak value of the waveform to 90 percent of the peak value (Fig. 2-18).

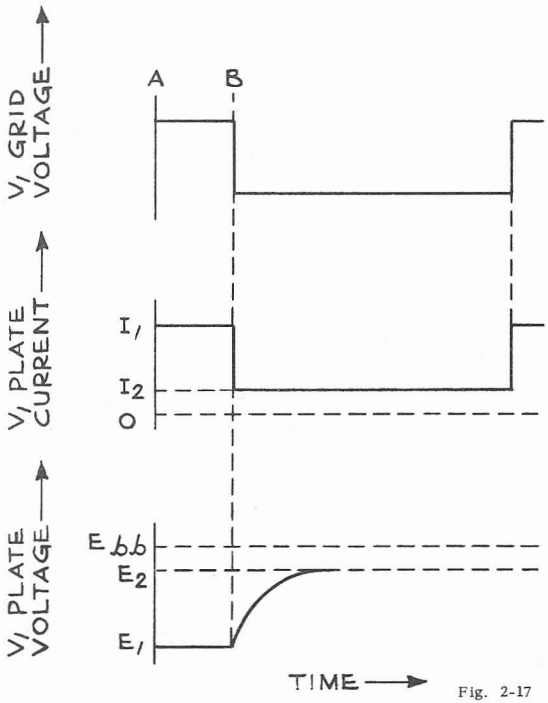

Fig. 2-17

(a) Another negative - going square-wave signal voltage we can apply to the input of the amplifier of Fig. 2-15, to analyze the response of the amplifier. The amplitude of this input signal is smaller than that of the input signal of Fig. 2-16a.

(b) Graph showing how the plate current in V_1 in Fig. 2-15 varies in response to the input signal of Fig. 2-17a. In this case, the input signal (Fig. 2-17a) doesn't make the grid of V_1 sufficiently negative at any time to cut off the plate current in V_1.

(c) Output signal voltage at the plate of V_1 when we apply the input signal of Fig. 2-17a to the grid of V_1. As in Fig. 2-16c, this output signal voltage at the plate of V_1 rises according to a capacitor-charging curve. Here, too, the time constant of the circuit involving C_2 and R_L establishes the steepness of the V_1 plate output signal-voltage curve.

A theoretically perfect square wave would rise instantly from its initial value to its final value--that is, its risetime would be zero. But it is impossible in practice to generate such a theoretically perfect square wave.

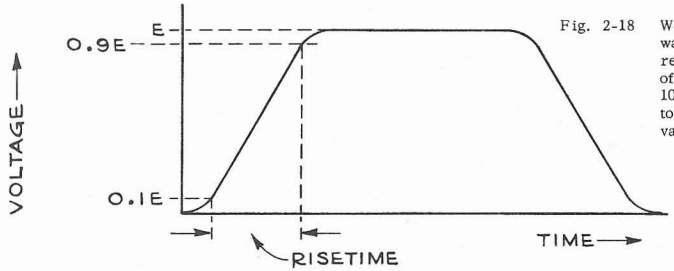

Fig. 2-18 We take the risetime of a waveform as the interval required for the rising edge of the waveform to rise from 10 percent of the peak value to 90 percent of the peak value.

(We see intuitively that the voltage between any pair of terminals can have only one value at any one instant of time--but a waveform rising instantly

from one value to another would present an "infinite" number of voltages between the terminals at the same instant. And this would be absurd.)

The risetime of a device that transmits or displays waveforms is taken as the risetime of the output (or displayed) waveform that would result if we were to drive the device with a theoretically perfect square wave. Since we can't generate perfect square waves and apply them to the input of the device, we actually use input square waves whose risetimes are much less than the risetime of the device we are testing.

It can be calculated that when we feed a very fast-rising square wave into the amplifier of Fig. 2-15, the risetime of the output waveform is

$$T_R = 2.2\, R_L C_2 \quad \text{nanoseconds} \qquad \text{Eq. (2-5)}$$

where R_L is measured in kilohms and C_2 is measured in picofarads.*

It is of interest to know the effect upon the risetime of an output wave if a theoretically perfect square wave were transmitted through two or more devices in cascade. Suppose that device A, operating alone, has a risetime T_{RA} ; and suppose that device B, operating alone, has a risetime T_{RB}. If we were to apply a theoretically perfect square wave to the two devices in cascade, it can be shown that the risetime T_R of the output wave would be**

$$T_R = (T_{RA}^2 + T_{RB}^2)^{1/2} \qquad \text{Eq. (2-6)}$$

As an example, if we were to apply a theoretically perfect square wave to the input of an amplifier whose risetime is 3 microseconds, and if the output of this amplifier were applied to a second amplifier whose risetime is 4 microseconds, then the risetime of the output waveform from the second amplifier would be 5 microseconds.

As a further example, suppose we used a plug-in preamplifier whose risetime is 15 nanoseconds with an oscilloscope whose main-unit risetime is 22 nanoseconds. The effective risetime of the oscilloscope-preamplifier combination would then be

$$T_R = (15^2 + 22^2)^{1/2} = 26.6 \quad \text{nanoseconds}$$

Now suppose we want to amplify or display some given waveform. And suppose we want the risetime of the output or displayed waveform to be the same as that of the input waveform, within some given tolerance. Figure 2-19, calculated from Eq. (2-6), tells us how good our amplifier or oscillo-

---

* 1 nanosecond (1 nsec) = 10^{-9} second = 1 millimicrosecond (1 mμsec)
1 picofarad (1 pf) = 10^{-12} farad = 1 micromicrofarad (1 $\mu\mu$f)

** It should be noted in passing that the formula given here is actually an approximation. But the results are sufficiently accurate for most purposes. (See G. E. Valley and H. Wallman, "Vacuum Tube Amplifiers," pages 77-79, McGraw-Hill Book Company, Inc., New York, 1948.)

scope must be with respect to risetime to get this result. For example, Fig. 2-19 shows us that if we want to observe the risetime of a waveform whose risetime is 0.04 microsecond, we need an oscilloscope whose risetime is not more than 0.01 microsecond if we don't want the error in the observation to exceed 3 percent.

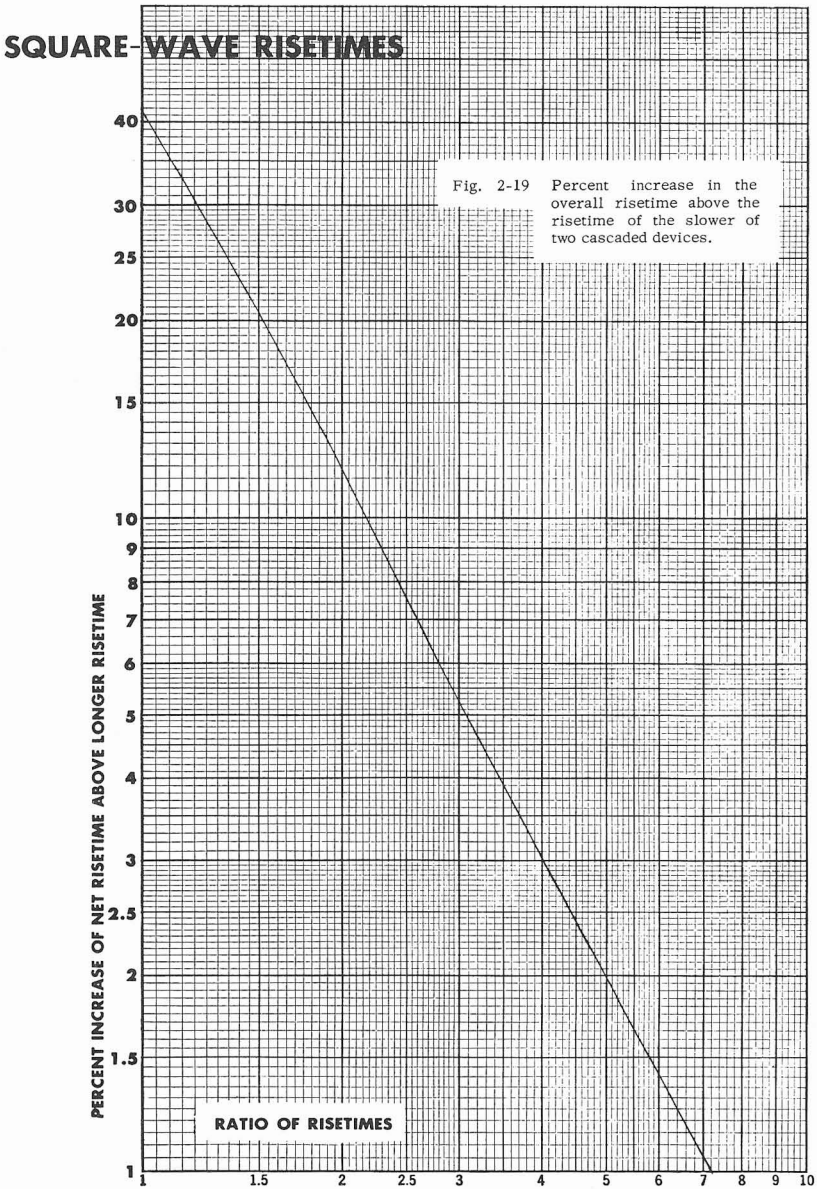

Fig. 2-19 Percent increase in the overall risetime above the risetime of the slower of two cascaded devices.

If we want to calculate the over-all risetime of three or more devices in cascade, we only have to combine the risetimes of all the devices in a root-sum-square method like that of Eq. (2-6).

2-10 Risetime measurements. To measure the risetime of a device, you would theoretically feed into its input terminals a perfect square wave (one that "jumped" instantly from its most negative voltage to its most positive voltage). Then you would observe with your oscilloscope the time interval required for the output voltage of the device to rise from 10 percent of its maximum value to 90 percent of its maximum value. This time interval would be called the risetime of the device.

But it is impossible to generate an input square wave that jumps instantly from its initial value to its final value (that is, we cannot generate an input square wave whose risetime is zero). Furthermore, the risetime of the vertical-deflection system of the oscilloscope itself is greater than zero, and this risetime of the oscilloscope must be taken into account. We will now describe a risetime-measurement technique that permits the use of square-wave generators having risetimes greater than zero and that takes into account the risetime of the oscilloscope.

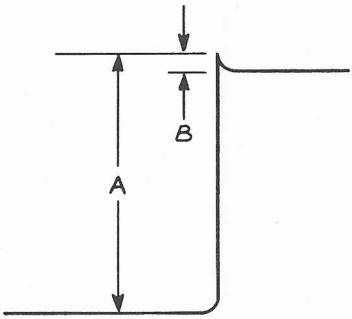

Fig. 2-20 Sometimes a square wave rises above its final value, then falls back to the final value. We refer to this excursion beyond the final values as overshoot. The percent of overshoot is $\frac{B}{A - B} \times 100\%$.

For best results, use a generator and an oscilloscope whose individual risetimes are appreciably shorter than the risetime of the device under test. Use a square-wave generator whose output waveform is essentially free from overshoot (Fig. 2-20).* Furthermore, the accuracy of the method to be described will be affected if the square-wave response of either the oscilloscope or the device under test has appreciable overshoot, say, more than 2 or possibly 3 percent.

---

* Overshoot is treated more fully in later sections of this book.

The risetime measurement method is as follows:

1. Observe the risetime of the square-wave output of the generator directly on the oscilloscope.* For this measurement, you should terminate the generator with a load resistance and shunt capacitance (including the shunt capacitance of the oscilloscope input) equal to the load resistance and shunt capacitance of the input circuit of the device you are going to test. We call this equivalent risetime of the generator and oscilloscope together T_{RE}.

2. Drive the device under test with the output of the square-wave generator. Use the oscilloscope to observe the risetime of the output waveform of the device under test. For this measurement, you should terminate the device under test with a load (including the input resistance and capacitance of the oscilloscope) whose characteristics are similar to those of the load into which the device normally operates. We shall call this observed risetime T_{RO}.

3. Compute the actual risetime T_R of the device under test from the relation

$$T_R = (T_{RO}^2 - T_{RE}^2)^{1/2} \qquad \text{Eq. (2-7)}$$

In the above measurements, use sweep rates such that the leading edge of the displayed waveform rises at an angle appropriate for accurate observations--roughly 45 degrees. In many risetime measurements, you might use horizontal sweep rates of the order of 0.02 microsecond per centimeter. When you are using these faster sweeps, it becomes important to set the triggering level control on your oscilloscope as far left as possible consistent with stable triggering. In this way you display as much of the lower flat portion of the square wave as possible, so that the rising portion doesn't occur in the first one or two horizontal divisions of the display where a major part of any sweep nonlinearity ordinarily appears.

You can reduce errors due to parallax by placing your eye so that the reflection of its iris, seen in the cathode-ray-tube face, is directly behind the point you are observing.

In measuring risetimes, you might want to use a special graticule having the minor divisions scribed completely across the graticule (or at least extended in the areas where you observe the 10-percent and 90-percent

---

* It is not usually convenient to determine the actual operating risetimes of the square-wave generator and of the oscilloscope separately. The method given here takes into account the composite effects of these separate risetimes. Note that manufacturers' specifications of risetimes can be greater than the actual risetimes (conservative specifications), so that if you used these specifications you might get an optimistic final result in your measurement.

points). The larger number of lines might render the graticule somewhat unsuitable for general use, but it permits close observations for risetime measurements.

2-11 Flat top of the amplified square wave.* Let us return to our consideration of the output square-wave signal voltage at the plate of V_1 in Fig. 2-15.

Thus far we have considered the rate at which the leading edge of the output square wave can rise in response to the falling edge of a negative-

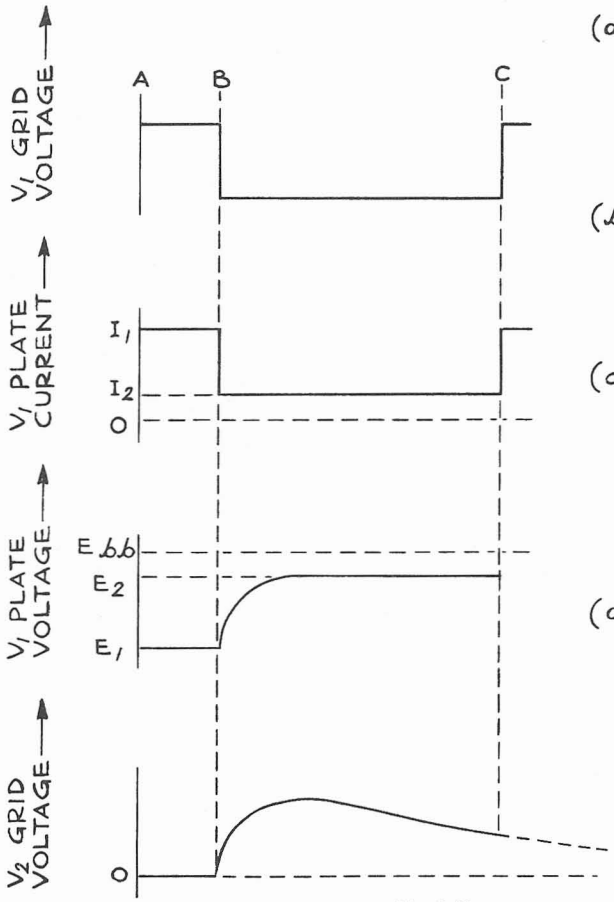

(a) A negative-going square-wave signal voltage we can apply to the input of the amplifier of Fig. 2-15, to analyze the response of the amplifier.

(b) Graph showing how the plate current in V_1 varies in response to the input signal of Fig. 2-21a.

(c) Output signal voltage at the plate of V_1 when we apply the input signal of Fig. 2-21a to the grid of V_1. The leading edge of this signal-voltage waveform at the plate of V_1 rises in a curved manner as described in Figs. 2-16 and 2-17.

(d) Signal voltage waveform reaching the grid of V_2 in Fig. 2-15. Not only does the leading edge rise in a curved manner (Fig. 2-21c), but the flat top of the waveform might show a certain amount of "sag." This sag results when the coupling capacitor C_1 discharges through R_g (Fig. 2-15). If the flat top of the square wave lasts long enough, the voltage at the grid of V_2 drops essentially to its orignal ground potential (dotted curve in Fig. 2-21d).

Fig. 2-21

* For simplicity, we do not consider here the effects of bypass capacitors that might be used across cathode-bias resistors or in the screen-grid circuits of pentode amplifiers.

going input square wave. We have seen that from point A to point B on the input-signal waveform (Fig. 2-21a), the signal source holds the grid of V_1 at a fixed voltage so that the plate current (Fig. 2-21b), has a fixed value. Therefore, from point A to point B, the output voltage (Fig. 2-21c) at the plate of V_1 has a fixed value E_1. When the input square wave falls to its most negative value (point B), the plate current of V_1 falls to its lowest value. And the output voltage at the plate of V_1 rises, according to an *RC* response curve, toward its most positive value E_2 (Sec. 2-8). This response curve involves R_L and C_2.

Now let us consider the flat top of the output square-wave signal at the plate of V_1 --that is, the portion of the output waveform from point B to point C in Fig. 2-21c. In particular, let us consider what distortion might occur to this portion of the signal as it is coupled to the grid of V_2.

We note that during the early period of the square wave, from point A to point B, the grid of V_2 was at zero volts (ground potential), while the left-hand terminal of C_1 was charged essentially to the voltage E_1. And during the interval of the leading edge of the square wave, the voltage across C_1 had to remain essentially at the value E_1 since displacement current in C_1 is held to a small value by the large resistance of R_g.

But during the flat-top interval of the square wave, the signal voltage of V_1 no longer changes rapidly. In fact, we have a situation where C_1 was originally charged to a voltage E_1, but where C_2 is now connected through R_g to a new voltage E_2. And a small displacement current in C_1 flows through R_g so that the potential at the right-hand terminal of C_1 falls from the value E_1 toward zero (ground). In fact, if the flat top of the square wave lasts long enough, the voltage at the grid of V_2 drops essentially to its original ground potential (see the dotted curve in Fig. 2-21d).

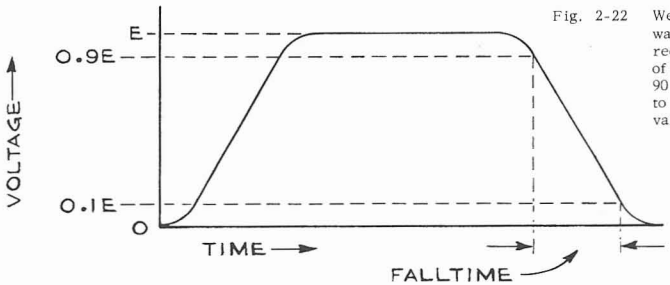

Fig. 2-22 We take the falltime of a waveform as the interval required for the falling edge of the waveform to fall from 90 percent of the final value to 10 percent of the final value.

In practice, the effect of this change in the charge in C_1 is to allow a "sag" in the flat top of the square wave that reaches the grid of V_2. We might not be able to observe the sag if the repetition frequency of the square-wave signal is high. Or the sag might not be noticeable even for low repetition frequencies if C_1 and R_g are very large. But if we use very large values of C_1, we might get to a point where the physical size of C_1 adds an excessive value to the shunt capacitance C_2 and thus affects the risetime of the amplifier. Furthermore, there is a practical upper limit

to the value of R_g, as shown in manufacturers' specifications for many tube types. For amplifiers that must faithfully reproduce signals that change very slowly, we usually resort to dc-coupled designs, as discussed in Chap. 5.

2-12 Falltime of the amplified square wave. The falltime of a pulse waveform is taken as the time required for the pulse waveform to fall from 90 percent of its maximum value to 10 percent of its maximum value (see Fig. 2-22). The falltime of a waveform is not necessarily equal to the risetime.

We have seen that the risetime of the amplifier stage that comprises V_1 of Fig. 2-15, and its associated components, is determined to a large extent by the time constant of the RC circuit composed of C_2 and R_L. This risetime is determined by the rate at which electrons can be drained off the upper terminal of C_2 into the positive power supply by way of R_L. In Sec. 2-9 we were given this formula for computing risetime:

$$T_R = 2.2\, R_L C_2 \qquad \text{Eq. (2-5)}$$

Actually, the relationship shown in Eq. (2-5) is an approximation. For the resistive part of the RC circuit that includes C_2 is not merely the plate-load resistance R_L. Instead, it can be shown by means of an equivalent circuit that the resistive part of this RC circuit is actually made up of R_L in parallel with the plate resistance r_p of tube V_1. And as you may know, r_p is not essentially constant. Instead, the value of r_p at any instant depends upon the instantaneous value of V_1 grid-to-cathode voltage and the corresponding V_1 plate current. Therefore the risetime might actually depend considerably upon the value of r_p and upon the manner in which r_p varies with grid voltage and plate current. In summary, then, the actual risetime depends upon (a) the plate-load resistance R_L, (b) the total shunt capacitance C_2, (c) the value of the dynamic plate resistance r_p of tube V_1, and (d) the manner in which r_p changes when we change the V_1 grid-to-cathode voltage and the corresponding plate current.

Clearly, the falltime of the output amplified square wave must also depend upon the four factors just named. Depending upon the relationships among these factors, it is entirely possible for the output falltime to be appreciably different from the output risetime.

2-13 Harmonic composition of periodic pulses. Thus far we have considered pulses as simply the waveforms that represent voltages or currents that change as time goes on. In other words, we have considered pulse voltages and currents as functions of time. And this is perhaps the best way, in general, to get a "feel" for the operation of pulse circuits.

But it is also useful, for some purposes, to understand the fact that pulses can also be considered to be made up of various sine waves, combined in such a way as to produce the pulse waveforms. That is, we may sometimes want to think of pulse waveforms in terms of their frequency components.

It can be shown that a sequence of periodic pulses is equivalent to the sum of

1. A fundamental wave--that is, a sine wave whose frequency is equal to the repetition frequency of the pulses.

2. And a series of harmonics--sine waves whose frequencies are whole numbers multiplied by the fundamental frequency. We refer to a sine wave of twice the fundamental frequency as the second harmonic; a sine wave of three times the fundamental frequency is the third harmonic, etc.

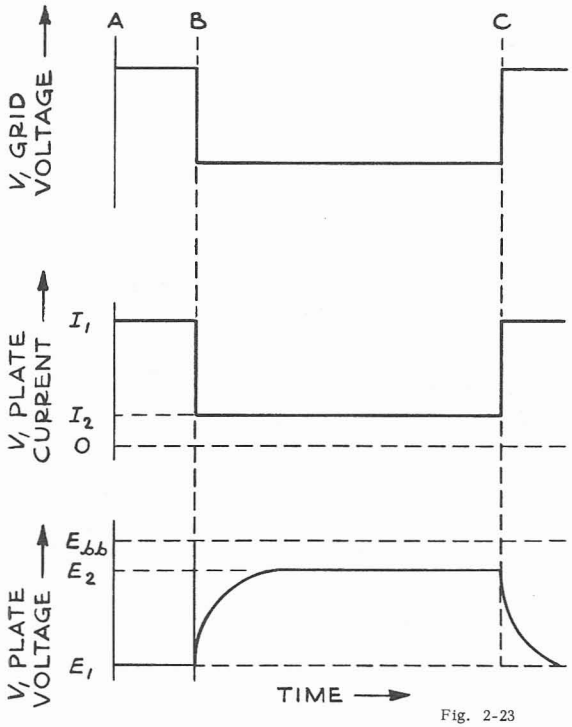

(a) A negative-going square-wave signal voltage we can apply to the input of the amplifier of Fig. 2-15, to analyze the response of the amplifier.

(b) Graph showing how the plate current in V_1 of Fig. 2-15 varies in response to the input signal of Fig. 2-23a.

(c) Output signal voltage at the plate of V_1 when we apply the input signal of Fig. 2-23a to the grid of V_1. The falling edge of this signal-voltage waveform at the plate of V_1 falls according to a capacitor-discharge curve (see also Fig. 2-21c). The time constant of the circuit involving C_2 and the plate-load resistance R_L primarily influence the steepness of the falling edge of the V_1 plate output signal-voltage curve (Fig. 2-23c). The signal reaching the grid of V_2 might also exhibit sag (Fig. 2-21d).

Fig. 2-23

The various sine waves just mentioned are called components of the pulse sequence. With appropriate equipment, we could either (a) break down a sequence of periodic pulses into its fundamental and harmonic sine-wave components, or (b) combine an appropriate set of sine waves to produce a desired sequence of periodic pulses. We shall not concern ourselves here with actually performing either of these operations. But the fact that a sequence of periodic pulses is equivalent to an appropriate set of sine-wave components helps us to understand the problems of generating, amplifying, and displaying pulses.

To reproduce a given pulse sequence faithfully by adding together the proper sine-wave components, each component sine wave must be correct in amplitude, frequency, and phase.

Because a sequence of periodic pulses is equivalent to a combination of several sine-wave components, we refer to such a pulse sequence as a complex waveform. In the following section we shall see how a particular pulse waveform is made up of its sine-wave components.

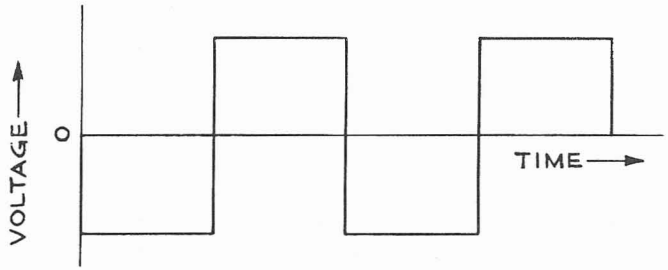

Fig. 2-24 A sequence of square-wave pulses.

2-14 Information contained in a square wave. Figure 2-24 shows a sequence of periodic pulses having a rectangular or "square" waveform. Such a pulse sequence can be shown to be made up of a fundamental sine wave plus a series of "odd" harmonic sine waves. That is, the pulse sequence is composed of the fundamental sine wave and only those harmonic sine waves whose frequencies are equal to the fundamental frequency multiplied by odd whole numbers. The amplitudes of the harmonics vary in inverse proportion to the frequencies of the harmonics. That is, the third harmonic is 1/3 as strong as the fundamental; the fifth harmonic is 1/5 as strong as the fundamental, etc.

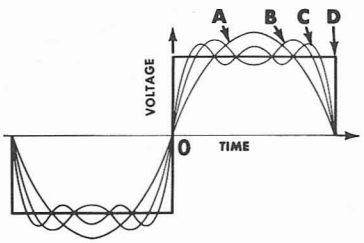

Fig. 2-25 We can combine a series of sine waves to form the square waves of Fig. 2-24. These sine waves include the fundamental wave (a sine wave whose frequency is the repetition frequency of the square-wave pulses), and a series of harmonics (sine waves whose frequencies are odd numbers multiplied by the fundamental frequency). In Fig. 2-25, curve *A* is the fundamental sine wave; curve *B* is the sum of the fundamental and the third harmonic; curve *C* is the sum of the fundamental plus the third and fifth harmonics. Further harmonics (seventh, ninth, etc.) would provide an even closer approach to the actual square wave *D*.

The way these sine-wave components can be combined to make up the original square-wave pulse sequence is suggested in Fig. 2-25. Curve A shows the fundamental sine wave alone; curve B shows the sum of the fundamental and the third harmonic; curve C shows the sum of the fundamental plus the third and fifth harmonics.

The first few harmonics combine with the fundamental to produce a waveform (curve C) that approaches an actual square wave (curve D). Additional harmonics, of higher frequencies, would (a) cause the leading edge of the wave to rise more rapidly, and (b) produce a sharper corner between the leading edge and the top of the wave. It would take an "infinite" range of harmonic frequencies to produce a truly vertical leading edge and an actual sharp corner; but we cannot produce "infinitely" high frequencies in practice. However, we can generate pulses that are very close to actual square waves.

2-15 Square-wave observations. If we use an oscilloscope to inspect the waveforms of square-wave pulses, we may observe one or more kinds of distortion in the displayed waveform. These defects can appear in the oscilloscope display not only because of distortion in the original square-wave pulses--but we might also observe a distorted display as a possible result of using an oscilloscope whose vertical-deflection system is improperly adjusted or limited in frequency response. Let us consider some of the possible distortions.

1. We may observe that the leading edge of a displayed square wave does not rise in a truly vertical direction (Fig. 2-26). The slope of the leading edge will be more noticeable if we operate the oscilloscope with fast horizontal sweeps. The leading edge can never be actually vertical, as we have just learned. But the departure from the vertical will be particularly noticeable if the square-wave pulse is especially lacking in high-frequency harmonic components.

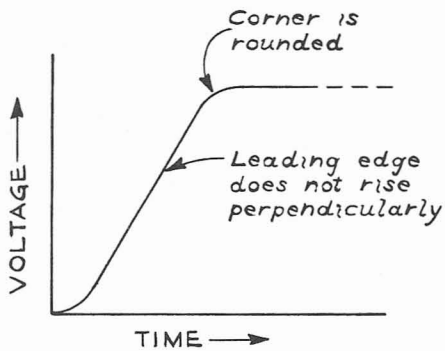

Fig. 2-26 If a square wave significantly lacks higher-frequency harmonics the leading and trailing edges, as displayed on an oscilloscope, depart more noticeably from the vertical; and the corners are rounded. Similarly if the high-frequency response of the oscilloscope is limited.

2. Suppose we observe more or less rounding of the "corner" between the leading edge and the flat top of the square wave (again see Fig. 2-26). This rounding (like the slope of the leading edge) tells us that something less than an "infinite" range of harmonic frequencies is present. Therefore, some degree of rounding is theoretically unavoidable. The rounding will be particularly noticeable if the pulse is especially lacking in high-frequency components.

3. Sometimes when we look at a square-wave pulse on an oscilloscope we see that the trace rises above its final value, then falls to the final value (Fig. 2-27a). This excursion beyond the final value is called overshoot. Sometimes overshoot takes the form of a very brief "spike" (Fig. 2-27b). Overshoot indicates that some high-frequency harmonic components are present in excessive amounts.

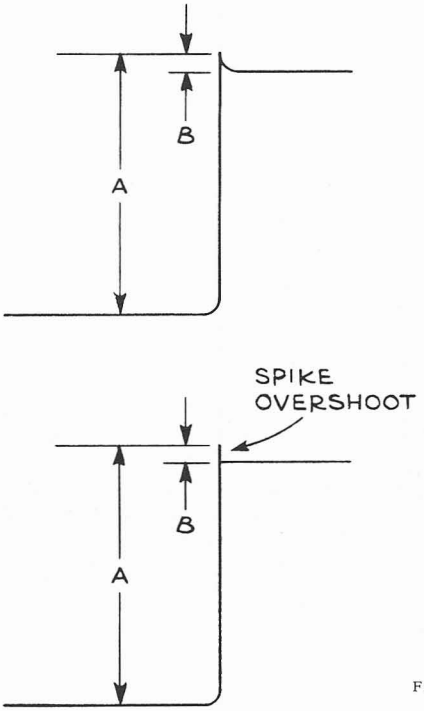

(a) Overshoot in a square wave (see also Fig. 2-20).

(b) Sometimes overshoot takes the form of a brief spike, as shown here. In any case, overshoot indicates excessive amounts of some high-frequency components.

Fig. 2-27

4. If low-frequency components (fundamental and the first few harmonics) are not present in the proper amounts and in the correct phase relation-

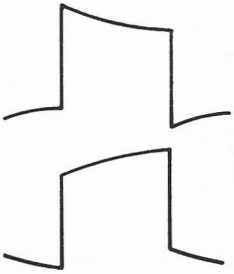

(a) Sag and fall in the flat top of a square wave indicates that the low-frequency components have leading phase angles and are attenuated.

(b) Upward bowing and rise in the flat top indicate that low-frequency components have lagging phase angles and are accentuated.

Fig. 2-28

ships, the part of the square wave affected will be the flat top. These low-frequency defects show up as slope or general curvature of the top (Fig. 2-28).

Figure 2-29 summarizes the fact that we can observe low-frequency information and high-frequency information in separate regions of a displayed square-wave pulse. In equipment testing, we find it convenient to use square waves rather than other waveforms, because the nature of a defect, rather than simply its presence, is suggested by the kind of distortion that occurs to a square wave. By transmitting square waves through a device and observing the output waveform by means of an oscilloscope, we can tell whether the transmission of low or of high frequencies is affected. This observation is not so well separated with regard to frequency if we use waves other than square waves.

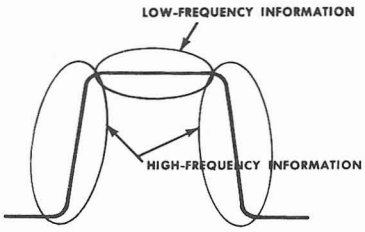

Fig. 2-29 Pictorial summary of the low- and high-frequency information in a square wave.

2-16 Frequency-response curves. Suppose we feed steady sine-wave signals of constant amplitude into a signal-transmitting device, such as an amplifier, and measure the amplitude of the output signal. If we vary the frequency of the input sine wave, and plot a graph of the amplitude of the output signal versus the frequency, we might arrive at a result somewhat like Fig. 2-30. Such a graph is called the frequency-response curve of the device. The actual form of the frequency-response curve depends upon the design and adjustment of the device.

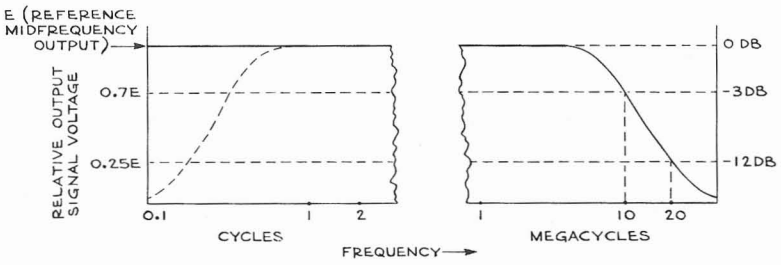

Fig. 2-30 To draw the frequency-response curve of an amplifier or other signal-transmitting device, we apply constant-amplitude sine waves to the input terminals. We vary the frequency of the input signal and note the corresponding amplitudes of the output signal. Then we plot the output-signal amplitude as a function of input-signal frequency.

The solid-line curve indicates the response of a dc-coupled amplifier (Sec. 5-10) or other dc-coupled device, and this response actually goes down to zero cycles (dc). The broken-line curve is an example of the low-frequency response of an ac-coupled amplifier (one that includes a coupling capacitor such as C_1 as Fig. 2-13).

In the example of Fig. 2-30, the output voltage drops to 70 percent of the midfrequency output voltage E when we raise the input frequency to 10 megacycles or when we lower the input frequency to about 0.3 cycle. We call these frequencies the upper and lower 3-db-down frequencies, respectively. The difference between these frequencies is the bandwidth of the device. When the lower 3-db-down frequency is very low as in Fig. 2-30, the bandwidth is essentially the same as the upper 3-db-down frequency.

For best (shortest) risetime without overshoot, the high-frequency end of the curve should be shaped about like that of Fig. 2-30 (gaussian curve). At twice the upper 3-db-down frequency (here, at 20 megacycles), the output voltage is about 0.25 times the midfrequency output E--that is, 12 db down.

2-17 Relation between risetime and bandwidth. In Sec. 2-14 we noted that the steepness of the leading edge of a square wave (its risetime, in effect) contains an indication of the presence in proper amplitude and phase of high-frequency components. If we extend this idea a little we see that the risetime of an amplifier or other signal-transmitting device conveys an idea of the relative ability of the device to transmit high frequencies. A short risetime indicates a relatively greater high-frequency response, and vice versa. For equipment having not more than 2 or 3 percent of overshoot (Fig. 2-20), the relation between the upper 3-db-down frequency B in megacycles and the risetime T_R in microseconds is approximately

$$BT_R = K \qquad \text{Eq. (2-8)}$$

Here K is a "constant" that usually lies between 0.33 and 0.5. A typical value is $K = 0.35$.

We can write Eq. (2-8) in two other forms:

$$T_R = \frac{K}{B} \qquad\qquad B = \frac{K}{T_R}$$

As an example, if the 3-db-down frequency of an amplifier is 10 megacycles, we should expect the risetime of the amplifier to be about $T_R = \frac{K}{B} = 0.35/10 = 0.035$ microseconds (=35 millimicroseconds).

2-18 Oscilloscope bandwidth requirements. From the foregoing, we note that a device (amplifier, oscilloscope, etc.) that has a short risetime must also be expected to respond to a correspondingly wide range of frequencies. By an extension of this idea, a device must have a large bandwidth if we can expect it to respond faithfully to any pulse waveform (square-wave, spike, sawtooth, etc.) that includes rapid changes.

It is easy to overlook this bandwidth (risetime) requirement in applying the oscilloscope to our work. Important features of a displayed waveform might remain entirely concealed if the oscilloscope vertical-deflection-system bandwidth is too narrow (that is, if the vertical-deflection-system risetime is too long). As an example, Fig. 2-31 shows displays produced

by the same waveform on three different oscilloscopes having vertical bandwidths of 10 megacycles, 100 megacycles, and 1,000 megacycles, respectively. This example shows that a wideband oscilloscope can reveal details that we might never suspect if we used an oscilloscope of limited vertical bandwidth (relatively long risetime). Let us consider a couple of practical examples.

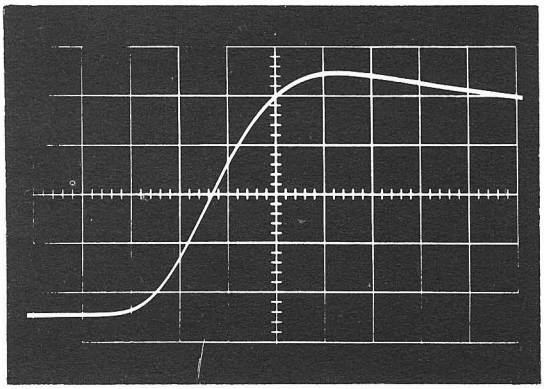

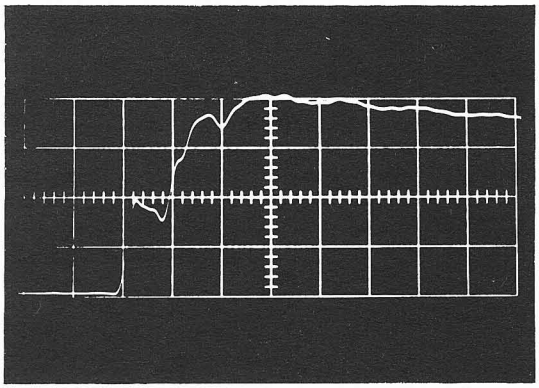

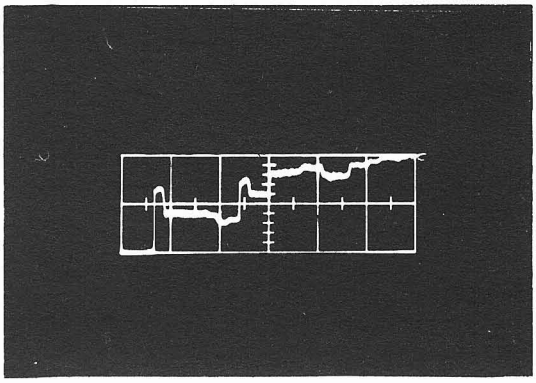

Fig. 2-31 a. Photograph of the display produced by a given waveform, where the oscilloscope vertical - deflection - system bandwidth is 10 megacycles.

b. Photograph showing the display produced by the waveform of Fig. 2-31a on a second oscilloscope having a vertical bandwidth of 100 megacycles. Note the additional waveform variations that we can see as a result of the increased vertical bandwidth (shorter risetime).

c. Photograph showing the display produced by the waveform of Fig. 2-31a on a third oscilloscope having a vertical bandwidth of 1,000 megacycles. This still wider vertical bandwidth (shorter risetime) allows us to see even finer details in the waveform structure. With an oscilloscope of limited vertical bandwidth, we would have no way of knowing whether these fine variations existed in the actual waveform.

1. In many oscilloscopes, the triggering pulses (spikes) are of brief duration. If we use a second "test" oscilloscope of wide bandwidth, we can readily observe these triggering pulses under favorable conditions. But if our test oscilloscope were limited in bandwidth, we probably would not see the triggering pulses--and therefore we might convince ourselves that some related fault existed in the oscilloscope under test.*

2. In one application, a designer found that semiconductor devices were being destroyed in a power-supply regulating circuit. When he inspected the waveforms in his circuit by means of an oscilloscope of limited bandwidth, he found nothing to indicate that the semiconductor devices were being abused. He subsequently investigated the waveforms with a broadband oscilloscope, and found that brief transients of great amplitude and high energy content were responsible for the destruction. This information enabled him to alter the design of his equipment so that the semiconductor devices were not abused.

Many other examples could be cited. The basic point is that, in investigating rapidly changing phenomena, we must use an oscilloscope having a sufficiently short risetime (wide bandwidth).

2-19 Time-constant curves. Using Fig. 2-32 we can quickly estimate the solutions of many problems involving *RL* and *RC* circuits. The following examples illustrate how you can use Fig. 2-32.

1. We suddenly apply 50 volts dc to a certain 2-henry inductor that has a resistance of 20 ohms. Find (a) the time constant T of the corresponding *RL* circuit, (b) the "final" value I_{final} of the inductor current, and (c) the inductor current i after 0.12 second.

Solution: (a) The time constant is

$$T=\frac{L}{R}=\frac{2}{20}= \quad 0.1 \text{ second}$$

(b) The "final" current is

$$I_{final} = V/R = \frac{50}{20} = 2.5 \text{ amperes}$$

(c) To find the current after 0.12 second we first note from part (a) of the solution that the time constant T of the circuit is 0.1 second. That is, we want to find the current after $\frac{0.12}{0.1} = 1.2$ time constants. Therefore, on the horizontal scale of Fig. 2-32, we locate the point corresponding to the value 1.2. We move upward from this point until we encounter Curve 1. The corresponding value on the vertical scale of Fig. 2-32 is 0.7 times the "final" (maximum) current. In part (b) of the solution we found that

---

* This is not to imply that a very wideband oscilloscope is necessarily required for testing other oscilloscopes. Other tests are available by which we can infer the presence or absence of the triggering pulses. But we must not conclude that the triggering pulses are absent simply because we might not see them on a test oscilloscope of limited bandwidth.

the "final" current is 2.5 amperes. Therefore the current after 0.12 second is

$$i = 0.7 \times 2.5 = 1.75 \quad \text{amperes}$$

2. We charge a 1-microfarad capacitor to 200 volts. Then we discharge the capacitor through a 50,000-ohm resistor. Find (a) the time constant T of the resistor-capacitor circuit, and (b) the interval t needed for the capacitor voltage to fall to 40 volts.

Solution: (a) The time constant is

$$T = RC = (5 \times 10^4 \text{ ohms}) \times (10^{-6} \text{ farad})$$
$$= 5 \times 10^{-2} \text{ second} = 0.05 \text{ second}$$

(b) We want to find the interval needed for the capacitor voltage to fall to 40 volts from a maximum of 200 volts. That is, we want to find the interval needed for the capacitor voltage to fall to $\frac{40}{200} = 0.2$ times the maximum capacitor voltage. Therefore, on the vertical scale of Fig. 2-31, we locate the point corresponding to 0.2 times the maximum voltage. We move horizontally from this point until we encounter Curve 2. The corresponding value on the horizontal scale of Fig. 2-32 is 1.6. Thus the capacitor voltage drops to 40 volts after 1.6 time-constant units. From part (a) of the solution, the time constant is 0.05 second. Therefore the interval needed for the capacitor voltage to drop to 40 volts is

$$t = 1.6 \times 0.05 = 0.08 \text{ second}$$

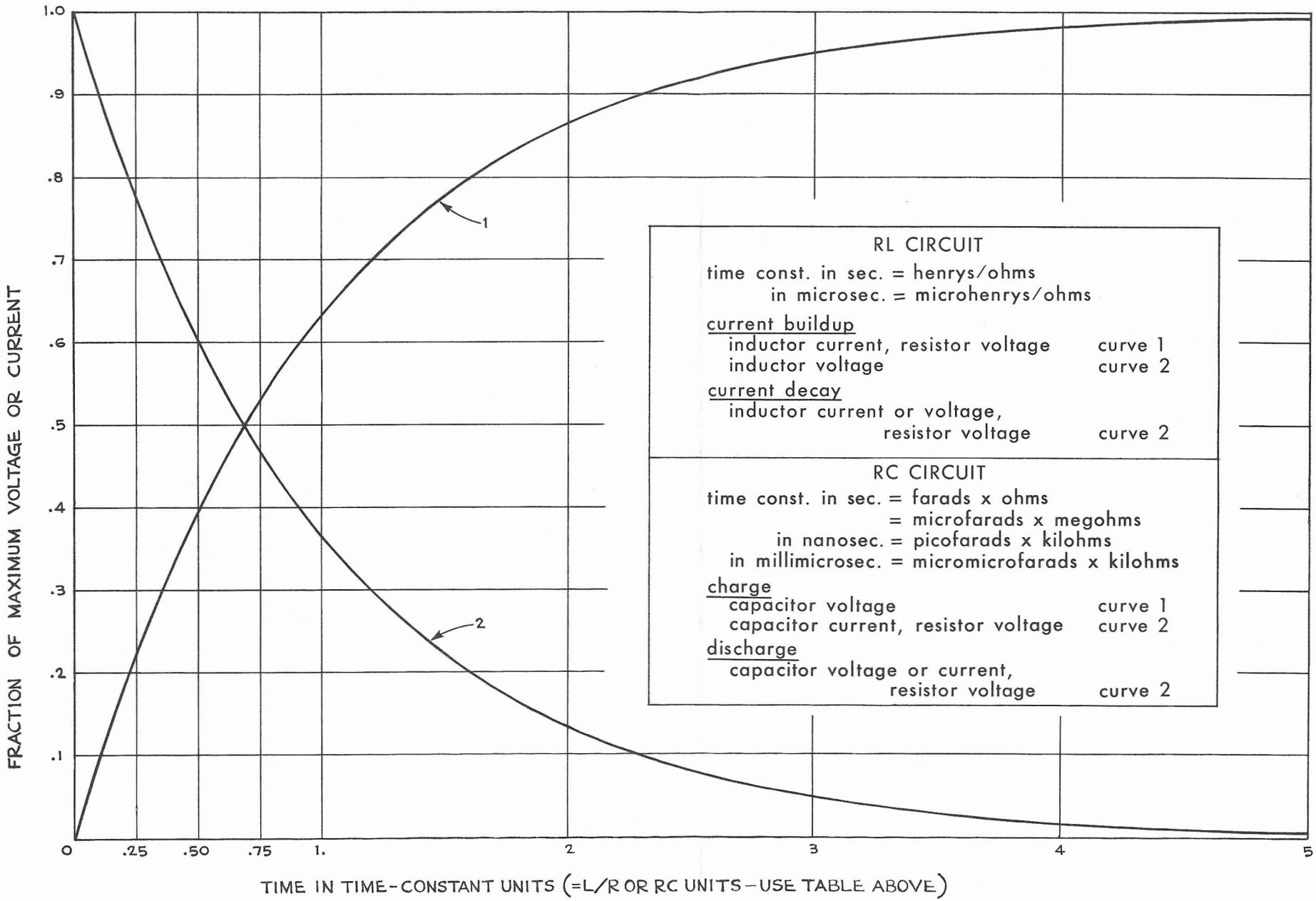

Fig. 2-32 Time-constant curves for solving problems involving RL and RC circuits. (See examples in Sec. 2-19.)

Chapter 3
DIFFERENTIATING AND INTEGRATING CIRCUITS

In this chapter we shall consider differentiating circuits--that is, circuits whose output voltage at each instant is proportional to the derivative, or rate of change, of the input pulse waveform. We shall also consider integrating circuits--that is, circuits whose output voltage at each instant is proportional to the integral of the input pulse waveform.

3-1 Some typical needs for differentiating and integrating circuits. A typical laboratory oscilloscope includes a multivibrator. One of the functions of this multivibrator is to start the action of the time-base generator (sweep generator) so that the cathode-ray-tube beam sweeps in a forward direction, from left to right, across the screen. Such a multivibrator is indicated in block form in Fig. 3-1.

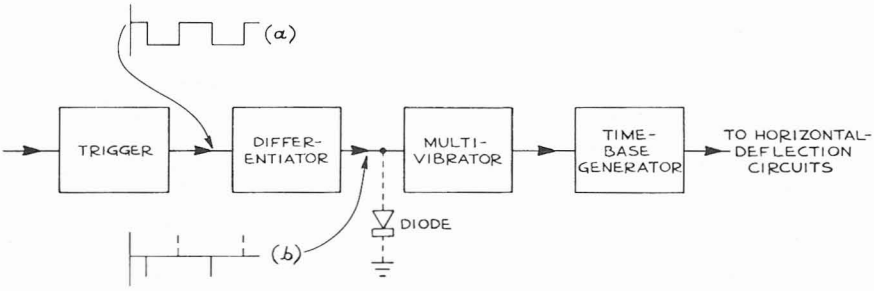

Fig. 3-1 Partial block diagram of an oscilloscope, showing an application of a differentiating circuit. The trigger circuit that drives the multivibrator generates a square wave (waveform a). But the multivibrator operates best from a negative-going spike input waveform (waveform b). To convert the square-wave multivibrator output into spikes, we insert a differentiator as shown. (The positive-going spikes perform no useful function,) so in some oscilloscopes we short-circuit the positive-going spikes by means of a diode.

To start the forward trace, the multivibrator requires an input trigger signal voltage that has a negative-going spike waveform. But the trigger circuit that drives the multivibrator actually develops a signal voltage that is essentially a square wave, as shown in Fig. 3-1. We convert the square-wave output of the trigger circuit into spikes, by means of the differentiating circuit indicated in Fig. 3-1. Figure 3-1 also shows the corresponding output waveform from the differentiating circuit.

(The multivibrator actually responds to the negative-going spikes. The positive-going spikes perform no useful function, and in some oscilloscopes we short-circuit the positive-going spikes by connecting a diode, shown in dotted circuitry, across the output circuit of the differentiator.)

Thus we see that a differentiating circuit is a necessary part of a typical laboratory oscilloscope.

Now let us mention a typical case in which we might use an integrating circuit. Suppose we want to use an oscilloscope to study the variation of magnetic flux in a transformer core, in response to a varying current in the primary winding. We can use the circuit of Fig. 3-2.

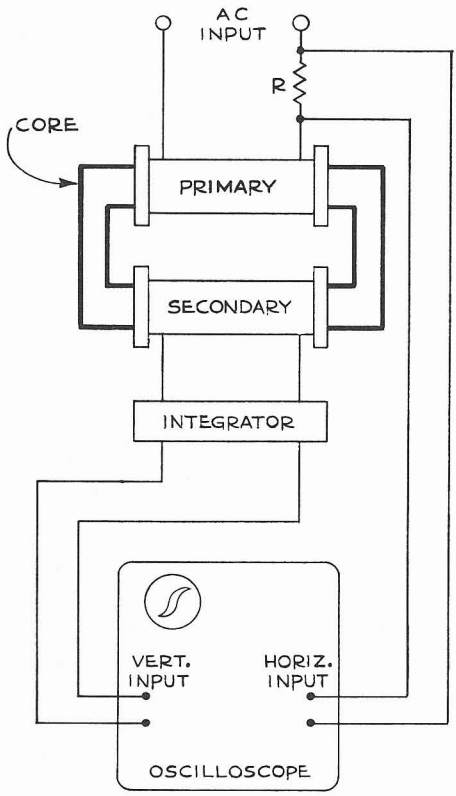

Fig. 3-2 A method of displaying on an oscilloscope the variation of magnetic flux in a transformer core in response to a varying primary current. This method shows an application of an integrating circuit. Instead of the linear horizontal-sweep waveform generated by the oscilloscope time-base generator, we apply to the horizontal-deflection system a voltage proportional to the primary current. The secondary voltage is proportional to the derivative (rate of change) of the flux. The integrator converts this secondary waveform to a waveform whose voltage is proportional to the flux itself. We apply the integrator output to the oscilloscope vertical input.

We apply to the oscilloscope horizontal-deflection system an input signal voltage that is proportional to the primary current. This horizontal-deflection signal voltage consists simply of the voltage drop across a series resistance R that we connect in the primary circuit.

Now we need a vertical-deflection signal voltage that is proportional to the magnetic flux in the transformer core. It can be shown that the open-circuit emf induced in the secondary winding of a transformer is proportional to the derivative (rate of change) of the flux. If we connect an integrating circuit to the output of the secondary winding, we can perform an operation

that is the reverse of the differentiation process. That is, the output voltage from the integrating circuit will be proportional to the magnetic flux itself--rather than to the derivative of the flux.

Thus the operation of the arrangement of Fig. 3-2 is such that at every instant the horizontal deflection of the cathode-ray-tube beam is proportional to the primary current--while the vertical deflection is proportional to the flux in the core. The oscilloscope displays the familiar so-called "hysteresis loop" of Fig. 3-3.

In addition to the uses just mentioned, many other applications of differentiating and integrating circuits appear in the design and use of oscilloscopes.

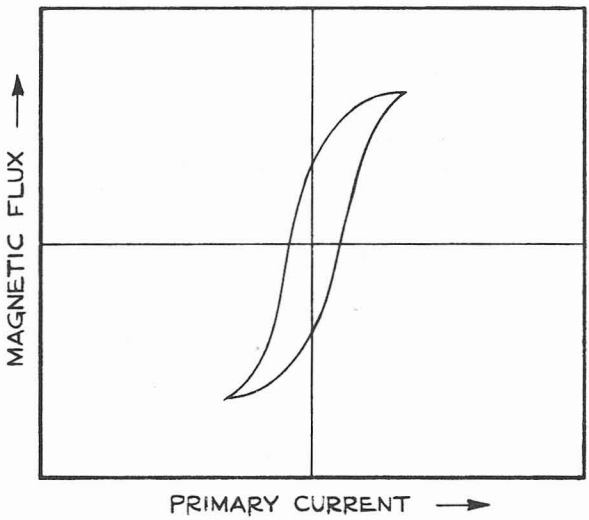

Fig. 3-3 Typical oscilloscope display when we use the method of Fig. 3-2.

We should note that, in general, a practical differentiating or integrating circuit doesn't provide an output waveform that is a perfect or ideal derivative or integral of the input waveform. Instead, the output waveform will deviate at least a little from the ideal.

We shall somewhat simplify the treatment that follows by omitting some of the lesser details of circuit operation.

3-2 The inductive differentiator. In Chap. 1, we learned that the voltage induced in an inductor is always proportional to the rate of change, or derivative, of the current flowing in the inductor. We make use of this basic property of an inductor in the differentiating circuit of Fig. 3-4.

Typically, we would drive the circuit of Fig. 3-4 by means of an amplifier tube having a large value of internal plate resistance, such as a pentode. Such a tube functions as a "constant-current generator," so that the plate output signal current is controlled almost entirely by the grid input signal voltage and doesn't depend much upon the load connected in the plate circuit.

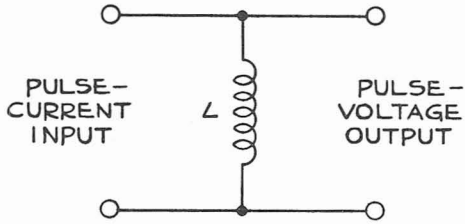

Fig. 3-4 Inductive differentiating circuit. When we apply a pulse-current input, the output voltage is proportional to the derivative (rate of change) of the input current.

When the amplifier supplies a current pulse to the inductor of Fig. 3-4, the response of the inductor is an output voltage pulse whose amplitude at any instant is proportional to the derivative of the input current. Two examples of this result are shown in Figs. 3-5 and 3-6.

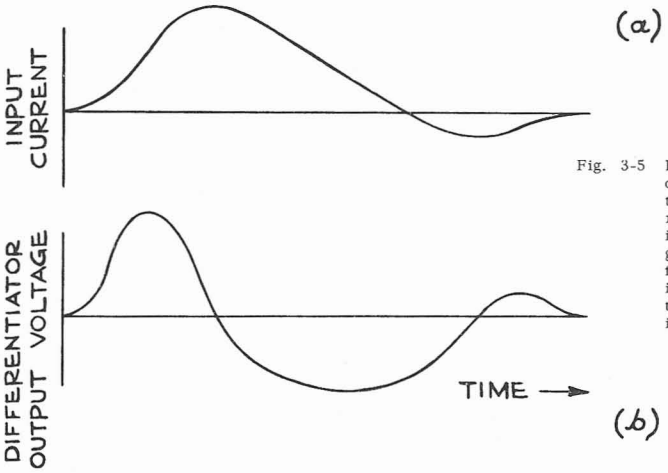

Fig. 3-5 Example of the operation of the inductive differentiator. If we apply the current waveform a to an inductive differentiator, we get the output voltage waveform b. The output voltage is proportional to the derivative (rate of change) of the input current.

Let us consider the operation of the circuit of Fig. 3-4 when we apply a square-wave input current pulse. Suppose that at a given instant (identified by point A in Fig. 3-7a) the input current tends to rise, in an extremely short interval, from an initial constant value I_1 to a new constant value I_2. While the current is rising very rapidly, its derivative is large and positive. The output induced voltage in the inductor L should then ideally have a large value (see Fig. 3-7b). Immediately after point A, the input current assumes its new constant value I_2, so that its derivative becomes

equal to zero. Ideally, then, the output induced voltage in L should drop suddenly to zero, along a line extremely close to that representing the output voltage rise.

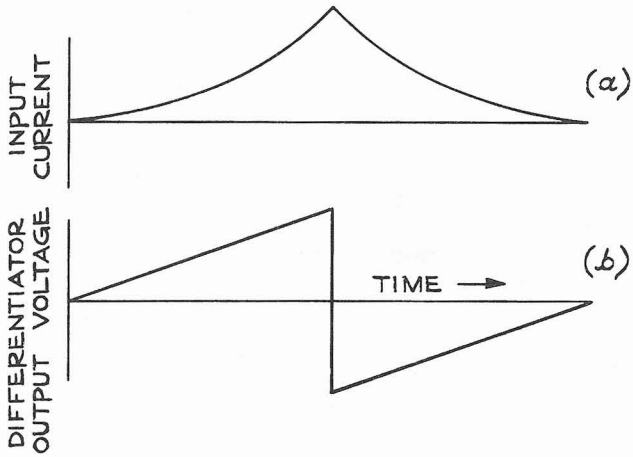

Fig. 3-6 Another example of the operation of the inductive differentiator.

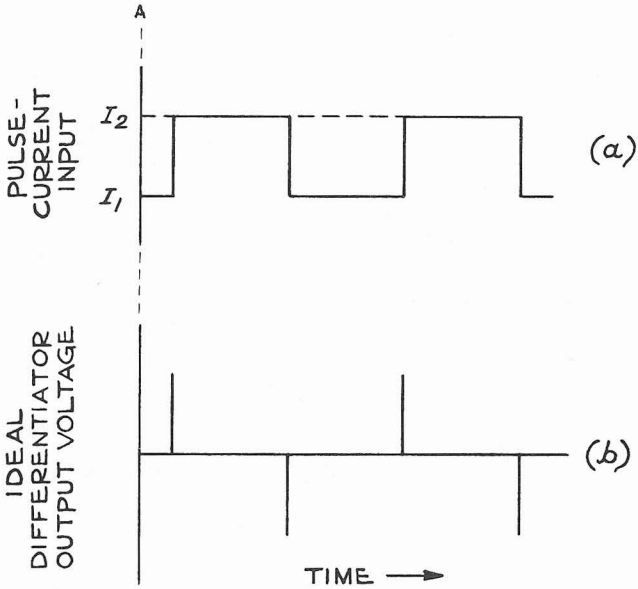

Fig. 3-7 Graph b shows the output-voltage waveform ideally delivered by the inductive differentiator when we apply the input-current waveform a.

In practice, however, the current in an inductor cannot change from one value to another in zero time--since that would mean that the rate of change of current (and therefore the induced voltage) must be "infinite." And an infinite voltage cannot exist in a practical circuit. Let us see, then, how the actual response of the inductive differentiator to a square-wave input differs from the ideal operation just discussed.

In considering the operation of a practical circuit, we must remember that the source of input signal cannot actually function as a true "constant-current generator." We learned in Sec. 1-2 that a signal source can be thought of as a zero-impedance generator that develops an emf v_I, connected in series with an internal impedance Z_0. To keep our present discussion simple, let us here assume that the generator internal impedance is a pure resistance, and let us call its value R_0. (If R_0 is large, the output current is controlled principally by the generated emf, and the effect of the external load upon the output current is relatively small. And we say that such a high-impedance source is approximately a constant-current generator. In the present case, the load consists of the differentiating inductor L. And from this viewpont, we got an approximate understanding of the operation of the differentiating circuit of Fig. 3-4 as outlined in the preceding paragraphs.)

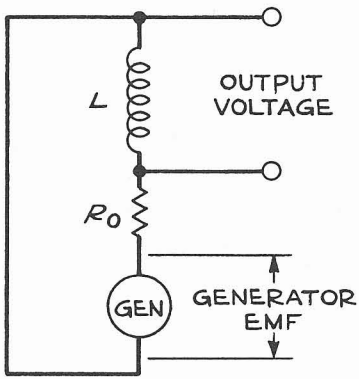

Fig. 3-8 We can consider a current-pulse source as a zero-impedance generator GEN in series with a large internal resistance R_0. Here we show this equivalent current-waveform source driving an inductive differentiator.

To understand more completely the operation of the differentiating circuit of Fig. 3-4, in response to a square-wave input signal, let us consider the circuit of Fig. 3-8, where the signal source (generator) is included. At point A in Fig. 3-9a, the emf of the generator increases abruptly from an original constant value E_1 to a new constant value E_2. But the inductance in the circuit doesn't allow the current to rise abruptly with the emf. At point A, then, the current in R_0 and L is negligible, so that the voltage drop across R_0 is very small. Thus essentially the entire generator voltage E_2 is left as a voltage drop across L. This voltage drop across L is the output voltage of the differentiator circuit at the instant identified by point A in Fig. 3-9c.

In the interval that comes after point A, we have a situation where the current in an RL circuit tends to increase from an initial value I_1 to a new value I_2. In this circuit, the resistance includes the internal resistance R_0 of the driving source plus any resistance in the inductor. In accordance with Sec. 2-2, the current rises according to curve B of Fig. 3-9b. At each instant in the interval represented by curve B, the induced voltage in L (and therefore the signal output voltage) is proportional to the slope of the curve B. A graph of the resulting output voltage is shown in curve B' in Fig. 3-9c.*

After the current effectively reaches its new value I_2 in the interval that comes after curve B, the current no longer changes until point C. Therefore, in the interval between curve B and point C, the induced voltage in L (and therefore the signal output voltage) remains at zero. At the instant identified by point C, a similar sequence of events begins--except that the polarities of the changes in voltages and currents are reversed. Thus the output signal voltage from the inductive differentiator, in response to a square-wave input signal waveform, is a sequence of alternate positive and negative spikes, as shown in Fig. 3-9c.

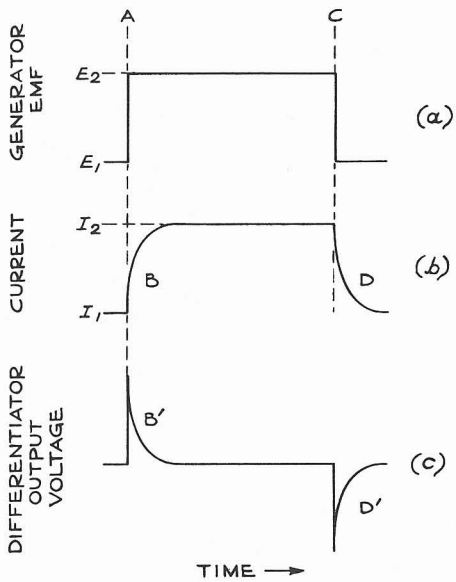

Fig. 3-9 When we apply a square-wave signal to an inductive differentiator we get the actual output-voltage waveform c rather than the ideal waveform of Fig. 3-7. The curvature in regions B' and D' corresponds to the time constant L/R_0 in Fig. 3-8.

* It can be shown that, for the particular kind of curve B that represents the current rise in an RL circuit, the slope or derivative curve B' has a shape that duplicates the current curve itself.

We might not be satisfied with the rate at which the output voltage returns to its constant normal value, along curves B' and D'. In other words, we might want to improve the quality of the differentiating action--so that the output response to a square-wave input signal would more nearly resemble the ideal response of Fig. 3-7b. Clearly, the amount of curvature at B' and at D' is determined by the time constant of the RL circuit (Sec. 2-3). And this time constant is equal to L/R. Thus we can sharpen the spikes (improve the differentiation) by decreasing L or by increasing the source resistance R_0. But another effect of either of these changes is to reduce the amplitude of the output signal. Thus we are usually forced into some compromise between the quality of the differentiating action and the amount of output signal we get.

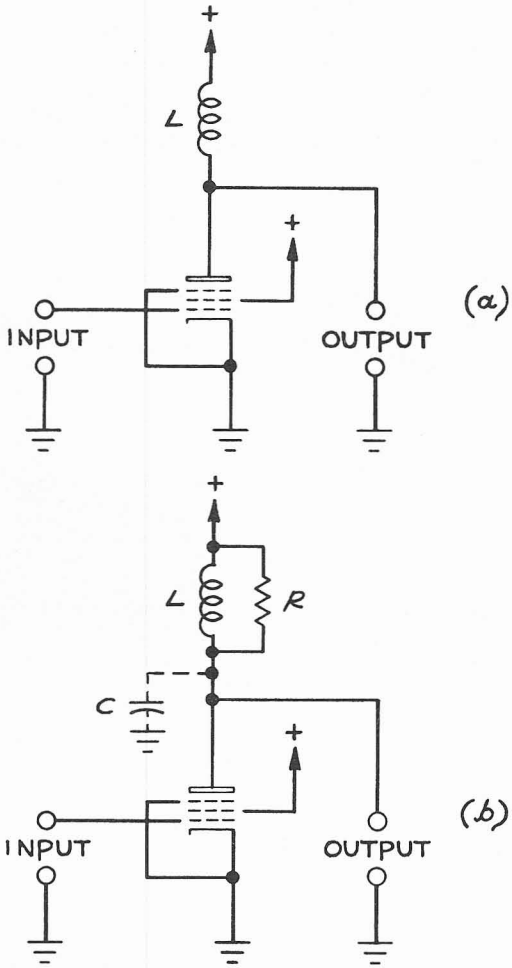

Fig. 3-10 (a) A pentode amplifier approximates a pulse current source to drive an inductive differentiator.

(b) The differentiating inductance L forms a resonant circuit in conjunction with the unavoidable plate-to-ground capacitance C. One way to avoid spurious damped oscillations in the output waveform is to shunt L with a resistor R.

Figure 3-10a shows how we might arrange an inductive differentiator circuit, including the tube.

In practice, we might encounter a problem arising from the unavoidable capacitance C (Fig. 3-10b) that exists between the plate of the tube and ground. This capacitance, in conjunction with the differentiating inductance L, forms a resonant circuit. When we apply a rapidly changing grid input signal voltage, this resonant circuit tends to "ring" (produce damped oscillations). One solution to this problem is to use only a small value of L. When L is small, ringing might be impossible. Or the ringing might occur at frequencies so high that other parts of the system that includes the differentiator can't respond to the damped oscillations. But when we use a small value of L we get only a small output signal.

Another solution to the "ringing" problem is to shunt the inductor L with a resistor R (Fig. 3-10b) that absorbs oscillatory energy when any damped oscillations tend to occur. When we use the shunt resistor R, we can use a reasonably large value of L and thus we can usually get an output voltage of satisfactory amplitude. But we lower the quality of the differentiating action. In fact, the output signal becomes a compromise between (1) the derivative of the input signal waveform, and (2) the input signal waveform itself. But for some applications, such a compromise waveform is adequate.

3-3 The *RC* differentiator. In Chap. 1, we learned that the current that flows in a capacitor is always proportional to the rate of change (derivative) of the applied voltage across the capacitor. We make use of this basic property of a capacitor in the differentiating circuit of Fig. 3-11.

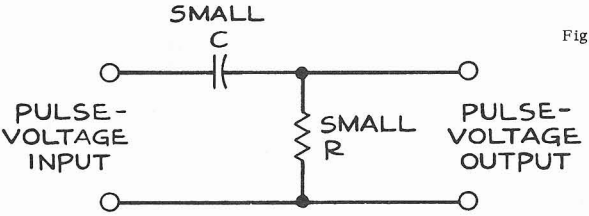

Fig. 3-11 *RC* differentiating circuit. If we neglect R the current in C is proportional to the derivative (rate of change) of the input voltage. The resulting voltage drop across R provides an output voltage that is proportional to the derivative of the input voltage.

Typically we would drive the circuit of Fig. 3-11 by means of an amplifier tube having only a small value of internal plate resistance, such as certain triodes. Such a tube functions as a "constant-voltage generator," so that the plate output signal voltage is controlled almost entirely by the grid input voltage and doesn't depend much upon the load connected in the plate circuit.

Note that the resistance R in the differentiator circuit is small. As a result, that portion of the circuit made up of R and C in Fig. 3-11 behaves, to a first approximation, very much as if R were absent. Thus the current flowing in R and C is, at any instant, essentially proportional to the rate of change of the applied signal voltage. The output voltage of the differentiating

network is the voltage drop developed across R as a result of the current flowing in C and R. Therefore this output voltage is essentially proportional to the rate of change (derivative) of the input signal voltage.

Thus we see that the output waveform we should expect from the RC differentiator, for a given input waveform, resembles the output we should expect from the inductive differentiator already discussed. In particular, let us consider the operation of the circuit of Fig. 3-11 when we apply a square-wave input signal voltage. Suppose that at a given instant (identified by point A in Fig. 3-12a) the input signal voltage becomes abruptly more positive. That is, the rate of change of the input signal voltage is large and positive. The displacement current in C (Fig. 3-12b) correspondingly becomes large and positive. The resulting voltage drop across R will be positive (point A in Fig. 3-12c).

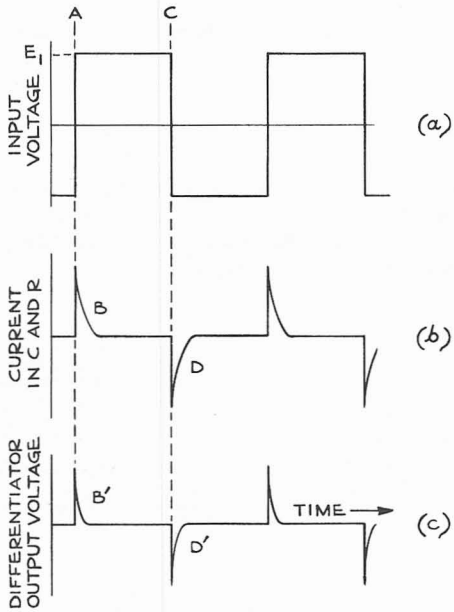

Fig. 3-12 When we apply a square-wave input voltage to an RC differentiator we get the output-voltage waveform c. The curvature in regions B' and D' corresponds to the time constant including C and R (Fig. 3-11) and the internal resistance of the signal source.

Note that this positive output voltage (interval A, Fig. 3-12c) is a voltage drop across R resulting from a displacement current in C. Thus C is now charged to some positive voltage. This capacitor voltage is nearly equal to the maximum positive input voltage E_I in Fig. 3-12a. In the instant that follows instant A, then, the capacitor C charges more slowly toward E_I. Thus the charging current in C decreases as the capacitor voltage approaches E_I. This falling current is shown in curve B of Fig. 3-12b. The resulting output-voltage curve (the voltage drop across R) is shown in curve B' of Fig. 3-12c.

After the differentiating capacitor C has effectively charged (that is, after curve B), the current that flows in C--and therefore the output voltage drop across R--remains at zero until the input signal voltage again changes (point C). At point C, a similar sequence of events begins--except that the polarities of the changes in voltages and currents are reversed.*

We see, then, that the output signal voltage from the RC differentiator, in response to a square-wave input signal, is a sequence of alternate positive and negative spikes, much like those produced by the inductive differentiator.

We might want to increase the rate at which the output voltage returns to its constant normal value, along curves B' and D'. In other words, we might want to improve the quality of the differentiating action--so that the output response to a square-wave input signal would more nearly resemble the ideal very sharp spikes. Clearly, the amount of curvature at B' and D' is determined by the time constant of the RC circuit (Sec. 2-5). And this time constant is equal to RC. Thus we can sharpen the spikes (improve the differentiation) by decreasing either R or C. But another effect of either of these changes is to reduce the amplitude of the output signal. Thus we are usually forced into some compromise between the quality of the differentiating action and the amount of output signal we get.

3-4 The capacitive integrator. In Chap. 1, we learned that the voltage appearing across a capacitor is always proportional to the integral of the current that flows in the capacitor. We use this information in the capacitive integrating circuit of Fig. 3-13.**

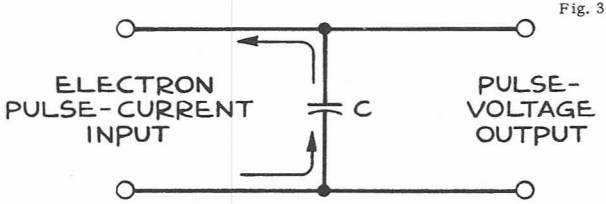

Fig. 3-13 Capacitive integrator. When we apply a pulse-current input, the output voltage is proportional to the integral of the input current. That is, the derivative (rate of change) of the output voltage is always proportional to the instantaneous amplitude of the input waveform.

---

* The internal resistance of the signal source is not necessarily the same for a positive-going signal as for a negative-going signal. An example is the case where the source is a plate-loaded amplifier. When we charge the differentiating capacitor C in one direction, the displacement current flows in the plate-load resistor. But when we charge C in the other direction, the displacement current flows through the tube. Consequently, curve B' in Fig. 3-12c is not necessarily symmetrical with curve D'.

** Instead of the capacitive integrator circuit, we might use an RL circuit as an integrator. But an RL circuit is, in general, inferior to the capacitive integrator from the standpoints of cost, size, weight, and performance. Therefore RL integrators are rarely used, and will not be treated here.

Typically, we would drive the circuit of Fig. 3-13 by means of an amplifier tube having a large value of internal plate resistance, such as a pentode. Such a tube functions as a "constant-current generator," so that the plate output signal current is controlled almost entirely by the grid input signal voltage and doesn't depend much upon the load connected in the plate circuit. (If the signal source doesn't have a large internal impedance, we might add a large value of resistance to the integrating circuit, as shown in Fig. 3-14).

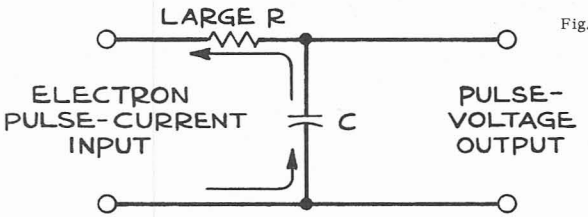

Fig. 3-14 If the internal resistance of the signal source isn't large we can add a series resistor to the integrator of Fig. 3-13 so that the circuit operates much as if we used an actual pulse-current source.

When the amplifier supplies a current pulse to the capacitor of Fig. 3-13, the response of the capacitor is an output voltage pulse whose amplitude at any instant is proportional to the integral of the input current. That is, the output signal voltage from the integrator changes at a rate that is proportional to the value of the input signal current. Two examples of this result are shown in Figs. 3-15 and 3-16.

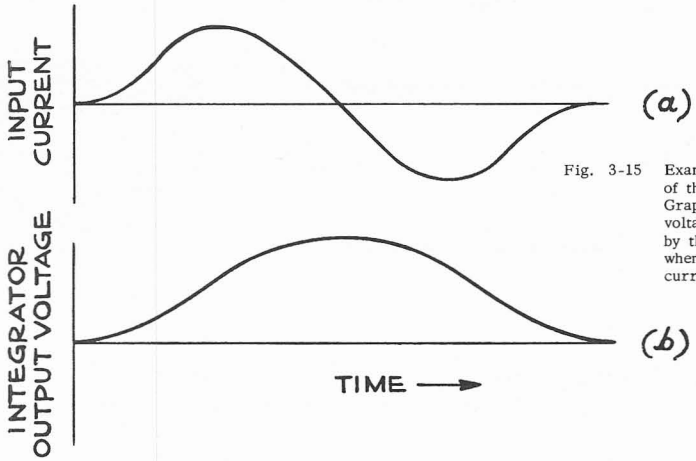

Fig. 3-15 Example of the operation of the capacitive integrator. Graph b shows the output-voltage waveform delivered by the capacitive integrator when we apply the input-current waveform a.

Let us consider the operation of the circuit of Fig. 3-13 when we apply a square-wave input signal current. Ideally, the circuit would operate as follows: Suppose that at a given instant (identified by point A in Fig. 3-17a) the input electron current increases from an original value of zero (0) to a new constant value I_1. The output signal voltage from the integrator is proportional to the integral of the input signal electron current. Since the

input electron current has a constant value I_1, the output voltage increases at a constant rate (region B in Fig. 3-17b).

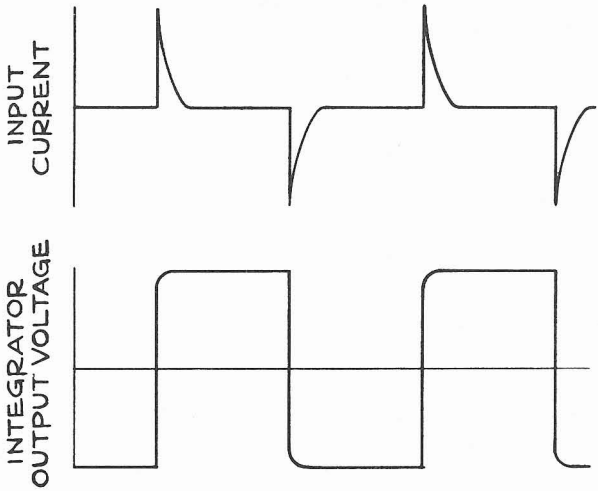

Fig. 3-16 Another example of the operation of the capacitive integrator.

We can more completely understand the actual operation of a practical integrating circuit, in response to a square-wave input signal, if we think of the integrating capacitance C and the internal generator resistance R_0 as forming an RC circuit. The time constant of this circuit is R_0C. This configuration is shown in Fig. 3-18. The generator emf (Fig. 3-19a) rises at point A from an original constant value E_1 to a new constant value E_2.

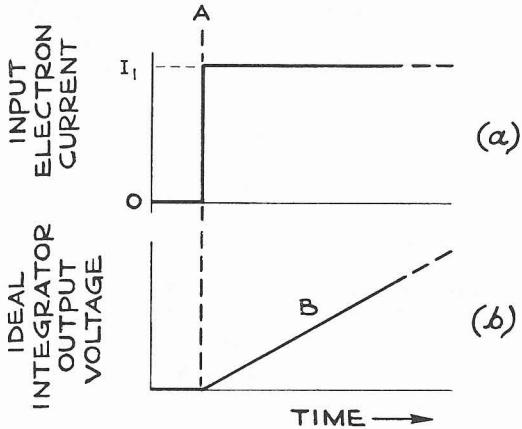

Fig. 3-17 When we apply a square-wave input current waveform a to the capacitive integrator the output-voltage waveform ideally follows ramp B.

Here we have a situation where the voltage across the capacitor in an RC circuit rises from an original constant value E_1 toward a new constant value E_2 (Sec. 2-5). Thus, if the top of the square-wave signal has a duration

that is an appreciable fraction of the time constant R_oC, we should expect to observe the typical curvature that exists in the response of an RC circuit to a step function. And this curvature is illustrated in the actual response curve B of Fig. 3-19b.

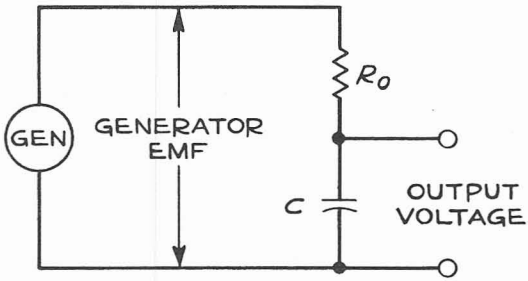

Fig. 3-18 We can consider a current-pulse source as a zero-impedance generator GEN in series with a large internal resistance R_o. Here we show this equivalent current-waveform source driving a capacitive integrator.

To reduce this curvature--in other words, to improve the quality of the integrating action--we can use a larger value of integrating capacitance C. Or we can further increase the internal generator resistance R_o. However, either of these changes results in a reduction in the output signal-voltage amplitude.

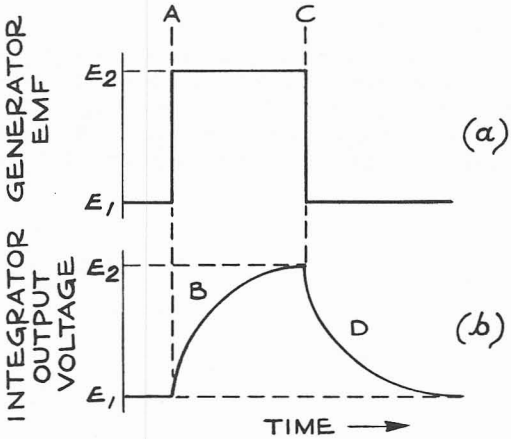

Fig. 3-19 When we apply a square-wave signal to a capacitive integrator we get the actual output-voltage waveform b rather than the ideal waveform of Fig. 3-17. The curvature in regions B and D corresponds to the time constant R_oC in Fig. 3-18.

The output response of the integrator follows curve B until the input signal changes at point C. At point C, a similar sequence of events begins--except that the polarities of the changes in voltages and currents are reversed.*

---

* The internal resistance of the signal source is not necessarily the same for a positive-going signal as it is for a negative-going signal. Consequently curve B in Fig. 3-19b is not necessarily symmetrical with curve D.

3-5 Another look at integration. Consider the electron-current pulse of Fig. 3-20a. Let us break the time interval occupied by the pulse into several smaller intervals. And let us consider what would be the effect of the varying electron current, during each smaller interval, in the charging of a capacitor.

We can separate the total pulse duration into smaller intervals by drawing equally spaced vertical lines on the graph of the pulse, such as the lines shown at A, B, C, etc., in Fig. 3-20a. Here the total pulse duration is 1 second; and by means of the vertical lines we have broken this pulse duration into smaller intervals, each having a duration of 0.2 second.

To determine the capacitor-charging effect of the varying electron current in any one small interval--say, interval AB--we estimate the average value of the varying electron current during that small interval. Here we estimate that the average value of the electron current during the interval AB is 0.5 milliampere (= 0.0005 ampere). We connect vertical line A with vertical line B by means of a straight horizontal line, at a height that indicates an electron current of 0.5 milliampere.

We remember that a charge of 1 coulomb is transferred when a current of 1 ampere flows for 1 second. In fact, the charge q in coulombs that is transferred is always equal to the current i in amperes multiplied by the time t in seconds during which the current flows. That is,

$$q = it \qquad \text{Eq. (3-1)}$$

Let us apply this formula to the interval AB of Fig. 3-20a. Here, an average current of 0.0005 ampere flows during an interval of 0.2 second. Thus the charge transferred during the interval AB is $0.0005 \times 0.2 = 0.0001$ coulomb.

Observe that this charge is actually equal to the area of the little rectangle whose base is the time interval AB and whose height is the average current i.

Now, we recall that the charge q, in coulombs, stored in a capacitor is given by the formula $q = Cv$, where C is the capacitance in farads and v is the voltage across the capacitor. The formula $q = Cv$ can also be written

$$v = \frac{q}{C} \qquad \text{Eq. (3-2)}$$

Suppose we apply the current pulse of Fig. 3-20a to a capacitor of 10 microfarads (= 0.00001 farad). We found above that the capacitor receives an electron charge of 0.0001 coulomb during the interval AB. Thus, by Eq. (3-2), the capacitor voltage rises by the amount $0.0001/0.00001 = 10$ volts, during the interval AB.

Suppose that during the 0.2-second interval BC the average electron current in the pulse of Fig. 3-20a is 1 milliampere (= 0.001 ampere). The capacitor receives a charge during interval BC, according to Eq. (3-1), equal to $0.001 \times 0.2 = 0.0002$ coulomb. Note that the amount of this

charge is proportional to the area of the rectangle formed by the vertical lines at B and C and having a height indicating an electron current of 1 milliampere.

By Eq. (3-2), the charge of 0.0002 coulomb received by the capacitor during the interval BC increases the capacitor voltage by an amount 0.0002/0.00001 = 20 volts. Thus at the end of the interval BC the total capacitor voltage will be 30 volts.

If we perform the foregoing operations with the remaining portions of the input electron-current pulse waveform of Fig. 3-20a, and plot the resulting capacitor-voltage waveform, we get a capacitor-voltage curve like that of Fig. 3-20b. The excursion of this capacitor-voltage waveform at any instant is proportional to the sum of the areas of the little rectangles--representing charge in coulombs--up to that instant.

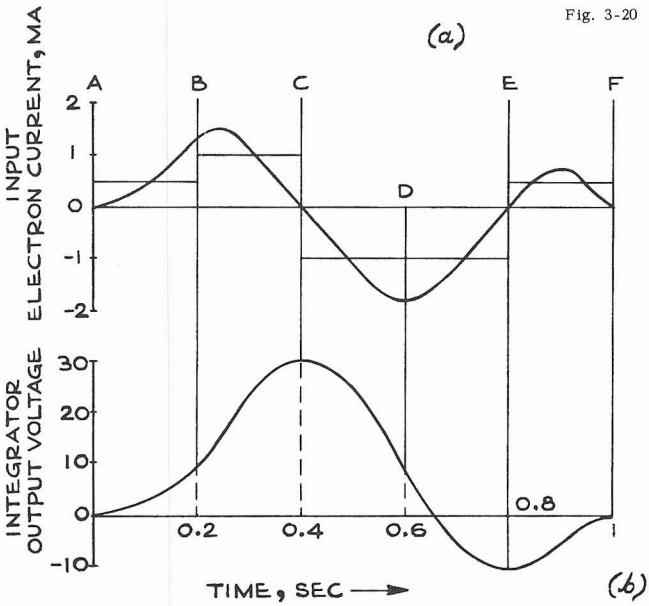

Fig. 3-20 Vertical lines A, B, C, etc., divide the horizontal time axis into equal intervals (here, the intervals are 0.2 second each). In the integrator-input-current graph a, horizontal lines connect these vertical lines. We drew each horizontal line at a vertical position that indicates the estimated average current during an 0.2-second interval. Thus during each 0.2-second interval the integrator capacitor receives a charge in coulombs equal to 0.2 multiplied by this average current in amperes during the interval. And the capacitor output voltage at the end of each 0.2-second interval equals 1/C multiplied by this charge in coulombs. Graph b shows the resulting capacitor output voltage across a 10-microfarad capacitor.

But we note that the waveform of Fig. 3-20b appears to have a derivative (slope) that is always proportional to the height of the input current pulse of Fig. 3-20a. In other words, the voltage waveform of Fig. 3-20b appears to be an integral curve of the electron-current waveform of Fig. 3-20a. In fact, if we plot an integral curve of the current waveform of Fig. 3-20a by the method of Sec. 1-14, we get the curve of Fig. 3-21b. And this curve is the same as Fig. 3-20b. It can be proved that we can consider the electrical operation called integration to be either

1. The finding of a waveform whose (negative or positive) derivative is always proportional to the height of a given waveform.

2. Or the finding of a waveform whose (positive or negative) excursion from some given height at any instant is proportional to the sum of all the little areas beneath a given curve up to that instant.

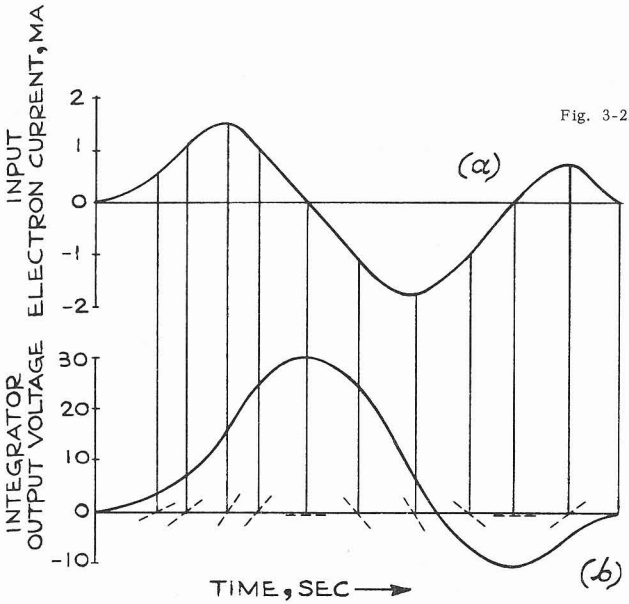

Fig. 3-21 Graph a shows the integrator-input-current waveform of Fig. 3-20a, redrawn. Graph b shows the resulting capacitor voltage across a 10-microfarad capacitor, plotted according to the method of Sec. 1-11. The voltage graph of Fig. 3-21b is the same as that of Fig. 3-20b. Thus we can describe an integrator as either (1) a device that performs the reverse of differentiation (Fig. 3-21); or (2) a device that develops an output voltage that represents the sum of all the little "samples" of current that have been flowing--each "sample" of current being multiplied by the interval during which it flowed (Fig. 3-20).

Chapter 4

INPUT CIRCUITS

In this chapter we begin the study of amplifiers that are especially suited to pulse work. We shall emphasize amplifiers that are encountered in oscilloscopes. But many of the principles we shall study apply to pulse amplifiers in general.

4-1 Loading of source by oscilloscope vertical-input circuit. When we observe a waveform on an oscilloscope screen, this question might occur to us: Does the waveform we see represent accurately the waveform that existed before we connected the oscilloscope input to the waveform source?

The input terminals of the oscilloscope vertical-deflection system usually represent (1) a rather large value of shunt resistance (typically, 1 megohm), in parallel with a small shunt capacitance (typically, 20 or 47 picofarads*). When we use an oscilloscope to look at the output wave from some source, it is wise to consider whether the resistive-capacitive loading caused by the vertical-input circuit might not alter the waveform that existed before we connected the oscilloscope to the source.

We recall that a waveform source can be thought of as a zero-impedance generator, in series with an internal impedance Z_0, as shown in Fig. 4-1.

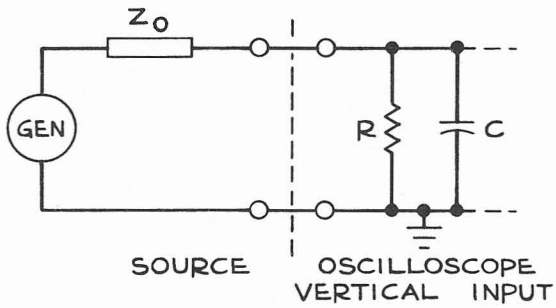

Fig. 4-1 We can consider a pulse source as a zero-impedance generator GEN in series with an internal impedance Z_0. Here we show this equivalent waveform source driving the vertical-input circuit of an oscilloscope. We can represent the vertical-input circuit by a shunt resistance R and a shunt capacitance C.

When we connect the oscilloscope vertical-deflection-system input circuit to the source output terminals, at least a small signal current flows into the resistive-capacitive load represented by the oscilloscope vertical-input circuit. This signal current, flowing in the oscilloscope vertical-input circuit, might cause a significant signal voltage drop across the source internal impedance Z_0. This voltage drop might change the amplitude or shape of the voltage waveform at the oscilloscope vertical-input terminals.

---

*1 picofarad (1 pf) = 1 micromicrofarad (1 $\mu\mu$f) = 10^{-12} farad.

In such a case, the oscilloscope can't faithfully display the waveform that existed before we connected the oscilloscope to the source.

Some factors that influence the amount of amplitude loss or distortion are:

1. If the internal impedance Z_0 of the source is quite small, the signal current flowing in the oscilloscope vertical-input circuit will cause only a small voltage drop across Z_0. Then the loading effect of the vertical-input circuit has only a relatively minor influence on the shape or amplitude of the displayed waveform. In fact, we might often not even be able to observe these effects.

2. If there are rapid changes (steep portions) in the voltage waveform developed by the source, then relatively large signal currents flow in the vertical-input-circuit capacitance. As we have learned, the waveform of the current flowing in a capacitance, generally speaking, is not the same as the waveform of the applied voltage. The new capacitive-current waveform causes a corresponding voltage drop across the source impedance Z_0 --so that the actual voltage waveform that appears across the vertical-input terminals is not the same as the voltage waveform developed by the source when the oscilloscope is disconnected. In such cases, we would expect the shape, as well as the amplitude, of the displayed waveform to be affected. This effect is greater when the source impedance Z_0 is large.

3. If there are no rapid changes (no steep portions) in the voltage waveform developed by the source, the loading effect of the vertical-input-circuit capacitance will be relatively small. Therefore the displayed waveform will be relatively undistorted. Even so, if the source impedance Z_0 is large, the amplitude of the displayed waveform might be reduced through the resistive loading effect of the oscilloscope vertical-input circuit.

4-2 Voltage-divider probes. We might use a simple voltage-divider probe to reduce the resistive-capacitive loading caused by the oscilloscope vertical-input circuit.

To study the voltage-divider probe, let's first consider the probe in a primitive form that might not be satisfactory in actual use. Such a primitive probe, shown in Fig. 4-2, might consist simply of a coaxial cable with a large value of resistance R_p in series at its input end. If we use such a probe between the waveform source and the vertical-input terminals of the oscilloscope, we increase the amount of resistance that loads the source. We thereby reduce the signal current flowing in the vertical-input circuit. Consequently there is less amplitude loss and waveform distortion at the source output terminals. On the other hand, a voltage divider now exists between the waveform source and the vertical-input circuit. This voltage divider is made up of (1) the probe resistor R_p, and (2) the input resistance R of the vertical-input circuit. Thus the amplitude of the voltage waveform that appears at the vertical-input terminals is reduced. (If we are looking at waveforms of small amplitude, this reduction in amplitude might constitute a problem. A solution might be to use a cathode-follower probe--discussed in Chap. 6.)

In practice, the input capacitance C reduces the impedance of the vertical-input circuit to high-frequency components of the input signal. Therefore the voltage-division ratio for high-frequency signal components is not the same as it is for low-frequency components. Thus, unless we compensate in some way for this loss of high-frequency information at the vertical-input circuit, the display won't faithfully reproduce the original signal waveform. If, for example, the original pulse is square wave, then in accordance with Sec. 2-15 the steepness of the leading edge of the displayed waveform is reduced and the corner is rounded (Fig. 4-3a).

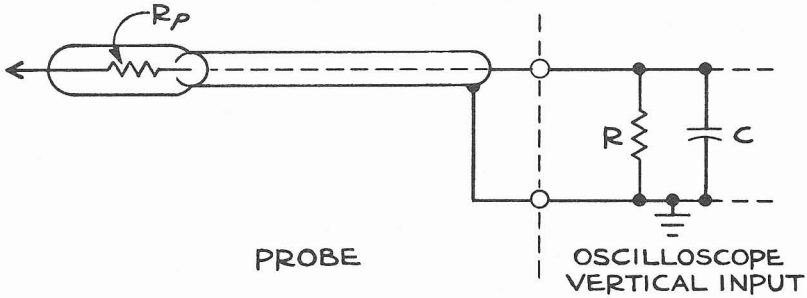

Fig. 4-2 A primitive probe (that might not be satisfactory in actual use). When we insert the probe resistor R_p in series with the oscilloscope vertical-input circuit as shown, we decrease the loading effect on the signal source. Thus we reduce any effect of the vertical-input circuit on the shape or amplitude of the original waveform. But at the same time we reduce the amplitude of the waveform applied to the vertical-input terminals because of the voltage-divider action of R_p and R.

Therefore, in actual probes, we provide an adjustable capacitor C_p across the probe resistor R_p (Fig. 4-4), so that we can make the voltage-division ratio the same for high-frequency components as it is for low-frequency components. In the case of a square-wave pulse, the leading edge will then be restored to its original steepness and the corner will be restored to its original sharpness (Fig. 4-3b). However, if we make C_p too large, we apply excess high-frequency components to the vertical-input circuit. This overcompensation, in accordance with Sec. 2-15, results in an overshoot in the displayed waveform that was not present in the original waveform. Such an overshoot is shown in Fig. 4-3c.

> To avoid serious errors in your pulse and transient observations, you must regularly check the adjustment of the probe capacitor C_p. In particular, you must check this adjustment whenever you use the probe with an oscilloscope or plug-in preamplifier whose input capacitance is different from that of the instrument with which you previously used the probe.

Adjust the probe capacitor as follows: Touch the probe tip to the output connector of the amplitude square-wave calibrator that is a part of your

oscilloscope. Adjust the oscilloscope controls to display several cycles of the calibrator square-wave output signal. Adjust the probe capacitor for the flattest tops on the displayed square waves.

As we have already learned, the probe reduces the resistive-capacitive loading across the signal source. The probe is marked with the new reduced shunt resistance and capacitance that we place across the signal source when we use the probe. Another effect of the probe is to reduce the amount of signal voltage that is applied directly to the oscilloscope vertical-input connector for a given amount of original signal voltage. This reduction in signal voltage results from the voltage-divider action that occurs when we use the probe.

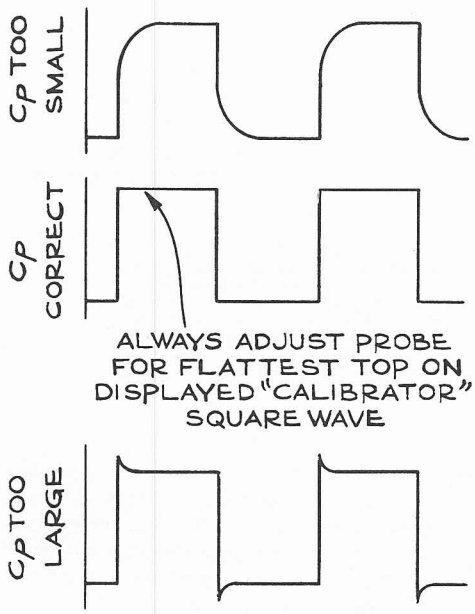

Fig. 4-3

(a) The shunt capacitance C in Fig. 4-2 makes the voltage-division ratio of the circuit that includes R_p and R greater at high frequencies than the voltage-division ratio at medium and low frequencies. Thus a displayed square wave is distorted--showing a sloping leading edge and a rounded corner.

(b) If we shunt the probe resistor R_p with just the right amount of capacitance C_p (Fig. 4-4) we can make the voltage-division ratio of the circuit comprising R_p and R the same at high frequencies as the ratio at middle and low frequencies. Thus we can restore the leading edge of the displayed square wave to its original steepness and restore the corner to its original sharpness.

(c) If we make the probe capacitance C_p too large we make the voltage-division ratio of the circuit comprising R_p and R smaller at high frequencies than at middle and low frequencies. Thus we distort a displayed square wave by introducing overshoot.

We take this voltage-divider action into account by noting the <u>attenuation ratio</u> marked on the probe. For example, if you are using a probe marked "10X" you have to multiply your resulting oscilloscope voltage indications by 10.

4-3 <u>Some important thoughts on the use of probes</u>. As we have already noted, you should habitually adjust your probe to operate properly into the input capacitance of your particular oscilloscope or plug-in preamplifier (Sec 4-2). Other important considerations regarding probes include:

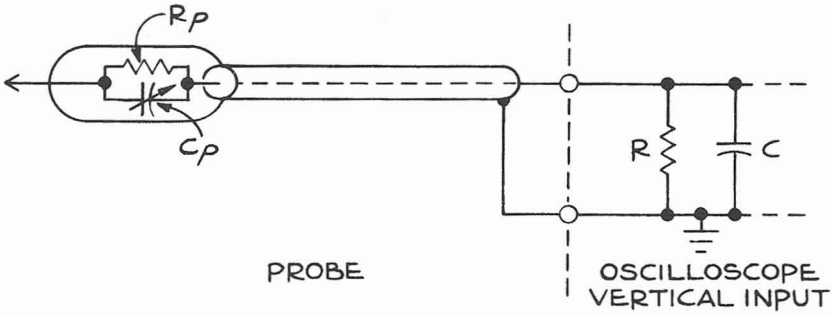

Fig. 4-4 If we shunt the probe resistor R_p with just the right amount of capacitance C_p we can make the voltage-division ratio of the circuit comprising R_p and R the same at high frequencies as the ratio at middle and low frequencies. Always adjust the probe capacitor for the flattest top on the displayed CALIBRATOR square wave.

1. To avoid distortion, use a probe of a type specified for your oscilloscope. Suppose, for example, that you want to display square waves by means of an oscilloscope whose vertical-deflection-system risetime is appreciably shorter than about 35 nanoseconds.* If you use a probe intended for oscilloscopes having a longer vertical-deflection-system risetime, you might observe a spurious "ringing" or damped oscillation along the top of the displayed square wave (Fig. 4-5). The frequency of the damped oscillation

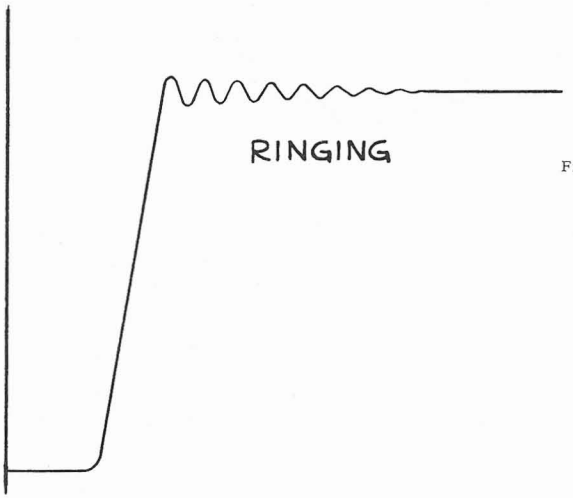

Fig. 4-5 Ringing (spurious damped oscillation) that you can introduce into the display if you use a probe that is unsuited to your oscilloscope (see Sec. 4-3).

is typically between 50 and 100 megacycles. Nevertheless you might see the damped oscillation on any oscilloscope whose rated vertical-deflection-

* 1 nanosecond=1 millimicrosecond $= 10^{-9}$ second.

system bandwidth is much greater than about 10 megacycles. (Somewhat similar spurious oscillations can result from causes unrelated to probes--for example, the vertical amplifier or the delay line might not be adjusted properly. See Sec. 5-5 and Chap. 8.) Table 4-1 describes probes formerly and currently supplied for use with Tektronix oscilloscopes.

TABLE 4-1

Probe Type No.	Appearance	Nose color coding	Suitable if oscilloscope vertical risetime is much shorter than 35 nanoseconds
P410	Fig. 4-6	Other than black	Yes
P510A	Fig. 4-6	Black	No
P6000**	Fig. 4-7	--	Yes

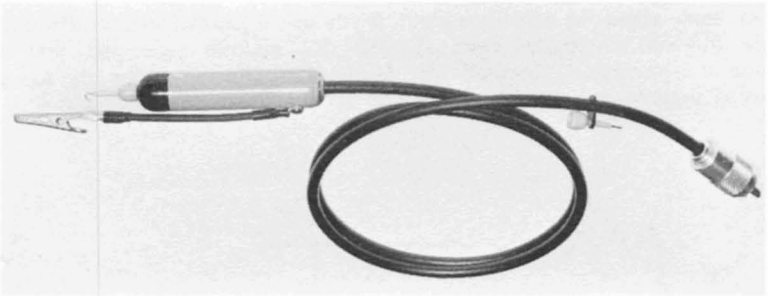

Fig. 4-6 Appearance of Type P410 and Type P510A probes formerly supplied with oscilloscopes.

2. Handle the probe carefully. Don't drop the probe or allow it to swing against other objects. Don't kink the probe cable or make unnecessarily sharp bends in the cable. Don't use the probe cable to tow your oscilloscope on a scopemobile.

3. Don't replace the probe cable with a longer cable. The probe-and-cable assembly is designed as a unit. If you need a longer probe cable, assure yourself of distortion-free displays by ordering a probe equipped with a longer cable. Don't shorten the cable, either. If you cut as much as two inches off the cable, distortion may become apparent in your display. The cables attached to Type P410 and Type P6000 probes have center conductors of special resistance wire--ringing will become apparent if you replace the cable with ordinary coaxial cable.

** If you have a Type P610 probe, or a Type P6000 probe bearing a single code letter O or P on the inner shell of the coaxial-cable connector, request an exchange replacement Type P6000 probe from your Field Engineer.

4. Don't apply excessive input voltages to the probe. Probes shipped with oscilloscopes typically are rated to handle input signals of 600 volts maximum excursion relative to the oscilloscope chassis. That is, the probes are rated for input signals of 600 volts dc or 600 volts peak-ac-plus-dc. For input signals that exceed these values, consider the high-voltage probes described in Sec. 4-8.

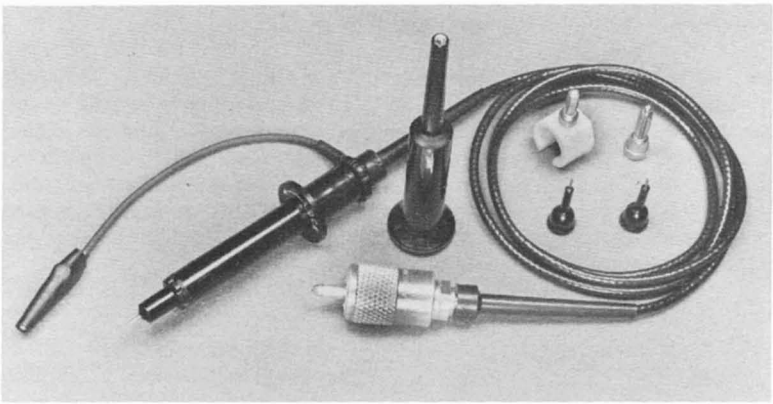

Fig. 4-7 P6000 probe supplied with oscilloscopes.

4-4 Need for adjusting the vertical-input capacitance. The vertical-input capacitance of your oscilloscope is small (as we have learned, typical specified values are 20 or 47 picofarads). Here are some reasons for keeping the input capacitance at its specified value.

1. Although even the small specified vertical-input capacitance might sometimes cause some distortion in the observed waveform, we at least want the display of a given waveform always to look the same when we use a given type of oscilloscope or plug-in preamplifier.

2. Sometimes we need to look at a given waveform at various points in a circuit--where the amplitude of the waveform is not the same at these various points. Consequently we need to control the vertical-deflection factor (or vertical sensitivity) of the oscilloscope so that we will always see a display of convenient vertical size. We control the vertical-deflection factor by means of the oscilloscope volts-per-division switch (Secs. 4-6 and 4-7). To make a given wave shape always appear the same on the oscilloscope screen, we must provide that a change in the volts-per-division-switch doesn't change the vertical-input capacitance.

3. When we use a probe, we don't want major readjustments in the probe capacitor to be required when we change the setting of the volts-per-division switch or when we use the probe with different oscilloscopes (or plug-in preamplifiers) of the same type. (We must remember, however, that the input-capacitance adjustment--described in succeeding paragraphs--is a maintenance adjustment. Therefore, in the field, the input capacitance

might not necessarily be adjusted to its ultimate accuracy in every case. We can't overemphasize the importance of checking that the probe is properly adjusted for the individual instrument, or even the particular setting of the volts-per-division switch.)

4-5 How to adjust the vertical-input capacitance. Figure 4-8 shows a simplified input circuit for an oscilloscope vertical-deflection system. V_1 is the input tube of the vertical amplifier.

When we connect a signal source to the input connector, we apply the signal voltage directly to the grid of V_1. Here the resistance load presented to the signal source is 1 megohm--the value of R_1. And the capacitive load presented to the signal source is C_1 in parallel with C_2. The dotted-in capacitance C_1 is the sum of the total input capacitance of the tube plus the stray capacitance of the input circuit. And C_2 is a small adjustable capacitor used in maintenance to adjust the total capacitance to ground, at the input connector, to its specified value.

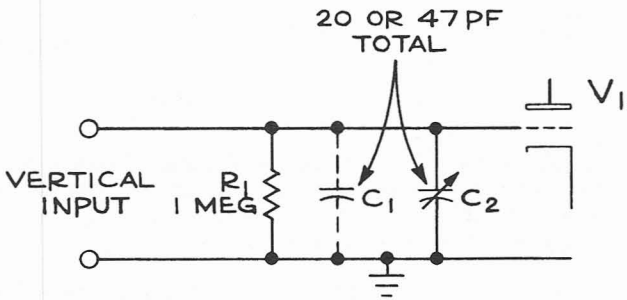

Fig. 4-8 Typical vertical-input circuit. The 1-megohm resistor R_1 causes a resistive loading effect on the source that generates the displayed waveform. In addition, the unavoidable tube-and-circuit capacitances (represented by C_1) cause a capacitive loading effect on the source of the displayed waveform. We include the adjustable capacitor C_2 to set the total input shunt capacitance to its specified value--usually 20 or 47 picofarads. We use a "capacitance standardizer" (Sec. 4-5) in adjusting C_2.

To adjust C_2, suppose for the moment that we have another oscilloscope--one whose input capacitance is known to be accurately adjusted to, say, 20 picofarads. If we use a probe to connect a square-wave source to the vertical-input system of this second oscilloscope, we can adjust the internal capacitor C_p of the probe for best square-wave response (Sec. 4-2). In this way we can adjust the probe for best square-wave response when we use the probe with any other oscilloscope whose input capacitance is accurately 20 picofarads.

Suppose we now use the correctly adjusted probe to connect a square-wave source to the oscilloscope vertical-input circuit shown in Fig. 4-8. Without disturbing the probe adjustment, we can adjust C_2 for the best square-wave

response, much as if we were adjusting the probe capacitor itself. As a result of this adjustment, the input capacitance of the circuit of Fig. 4-8 will be 20 picofarads, quite accurately.

In practice, we don't ordinarily use an actual probe for the above adjustment. Instead, we use an "input-capacitance standardizer." This device consists of a precision resistor in parallel with a factory-adjusted capacitor, mounted in a container with convenient coaxial connectors. We use the standardizer to connect a square-wave source to the oscilloscope input terminals; then we set C_2 for the best square-wave response.

Input-capacitance standardizers are available for adjusting input-circuit capacitances to either 20 or 47 picofarads.

4-6 Control of the vertical-deflection factor. In using an oscilloscope, we generally want to adjust the height of the display to a convenient value for input waveforms having either large or small peak-to-peak amplitudes. That is, we need some way of controlling the vertical-deflection factor of the oscilloscope--some way of selecting the number of volts of input signal that will cause one major division of vertical deflection of the cathode-ray-tube spot. The switch that gives us this control is the volts-per-division (or volts-per-centimeter) switch. Before we study the circuitry related to this switch, let us consider some of the requirements that the switching circuitry has to meet.

In the simplified vertical-input circuit of Fig. 4-8, we applied the input signal directly to the grid of the vertical-amplifier input tube V_1. As we shall see, the input connector is actually connected directly to the grid only when the volts-per-division switch is set to one particular position, called the "straight-through" position. Often, but not always, the straight-through position is the .05-volt-per-division position.

Suppose we want to use the oscilloscope to look at a waveform whose peak-to-peak amplitude is in the range from, say, 0.1 to 0.2 volt. To adjust the peak-to-peak vertical amplitude of the display to a convenient value (say, 2 to 4 major divisions), we would probably set the volts-per-division switch to the .05 volt-per-division position. Assume that, in the oscilloscope we are using, the .05-volt-per-division position of this switch is the straight-through position, where the input signal is applied directly to the grid of the vertical-amplifier input tube.

Next, suppose we want to look at a new signal--one whose peak-to-peak amplitude is in the range from, say 0.2 to 0.4 volt. This peak-to-peak amplitude is about twice that of the original waveform. To adjust the vertical amplitude of the display to a convenient value (again, 2 to 4 major divisions), we would likely turn the volts-per-division switch from the .05-volt-per-division position to the .1-volt-per-division position. This operation introduces, between the input connector and the grid of the vertical-amplifier input tube, a compensated voltage divider (compensated attenuator) whose voltage-division ratio is 2 to 1. The action of the compensated voltage divider

is described in the next section. The compensated voltage divider is mounted on the volts-per-division switch inside the oscilloscope. It reduces the signal voltage applied to the grid of the vertical-amplifier input tube to one-half the voltage applied to the input connector. Thus we maintain the vertical amplitude of the display at a convenient value, despite the increased input-signal voltage.

In an actual volts-per-division switch, we might find compensated voltage dividers whose ratios are, for example, 2 to 1, 4 to 1, 10 to 1, 100 to 1, and 1,000 to 1. In some settings of the volts-per-division switch, we might "stack" two voltage dividers (connect them in cascade) so that the overall voltage-division ratio is the product of the voltage-division ratios of two different compensated voltage dividers.

Incidentally, many volts-per-division switches also have positions that insert additional stages of amplification. We can use these additional stages to observe signals of small amplitude.

Ideally, the following things happen when we turn the volts-per-division switch from the .05-volt-per-division position to the .1-volt-per-division position:

1. The signal voltage that reaches the grid of the vertical-amplifier input tube V_1 falls to one-half the voltage applied to the input connector.

2. The voltage waveform that reaches the grid of V_1 has the same shape as that applied to the input connector.

3. And the loading connected to the signal source, resulting from the oscilloscope connection, is still 1 megohm of resistance in parallel with the specified input capacitance (usually either 20 or 47 picofarads).

In the next section, we shall see how we can adjust the compensated voltage dividers to meet these three requirements.

4-7 Compensated voltage dividers. We can describe the operation of a compensated voltage divider with reference to Fig. 4-9. This figure shows the vertical-input circuit of Fig. 4-8 along with a simplified volts-per-division switch that has only three positions.

When we turn the volts-per-division switch to the straight-through position (in this case, the .05-volt-per-division position), we apply the input signal voltage directly to the grid of the vertical-amplifier input tube V_1. Thus we load the signal source with the resistance R_1 and the parallel capacitances C_1 and C_2. Assume that we have correctly adjusted C_2 as described in Sec. 4-5. Thus, when we set the volts-per-division switch to the straight-through position, we load the signal source with 1 megohm of resistance in parallel with the specified input capacitance of the oscilloscope vertical-deflection system.

When we turn the volts-per-division switch to the .1-volt-per-division position, we thereby insert the "X2" voltage divider between the input connector and the grid of the vertical-amplfier input tube V_1. The upper resistor in this divider is the 500,000-ohm resistor R_2. We also bring the 1-megohm resistor R_3 into the circuit. But R_3 is now connected in parallel with R_1, also 1 megohm--so that the parallel combination of R_1 and R_3 has an effective resistance of 500,000 ohms. Thus the effective resistance of each section of the voltage divider is 500,000 ohms, so that a 2-to-1 voltage division occurs. Therefore this arrangement meets requirement 1 of Sec. 4-6.

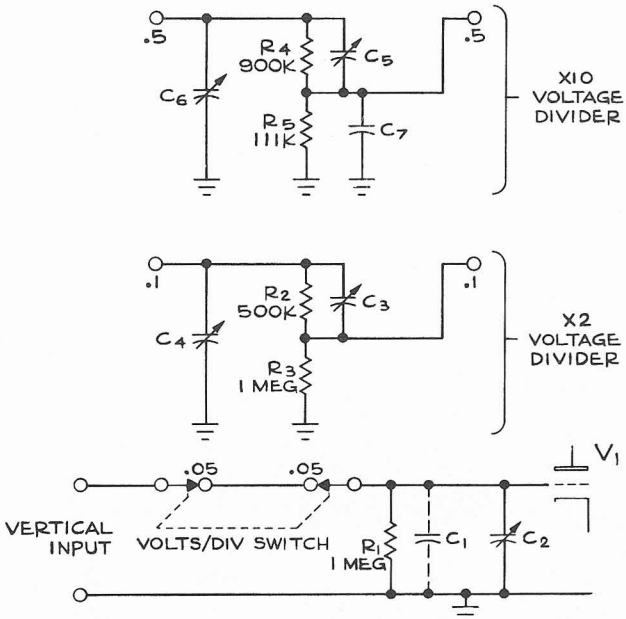

Fig. 4-9 Typical vertical-input circuit, including a simplified VOLTS/DIV switch (or VOLTS/CM switch). In this particular circuit, when we set the switch to the .05-volt-per-division position we apply the input waveform directly to the grid of the vertical-amplifier input tube V_1. When we set the VOLTS/DIV switch to the .1-volt-per-division position we introduce the "X2" voltage divider. The voltage divider consists of the upper resistor R_2 and a lower resistor made up of R_3 and R_1 in parallel. We adjust C_3 for the flattest top on a displayed square wave--much in the way we adjust a probe (Fig. 4-3). Using a capacitance standardizer (Sec. 4-5) we set the vertical-input capacitance by means of C_4 to the specified value. When we set the VOLTS/DIV switch to the .5-volt-per-division position we introduce the "X10" voltage divider, which functions according to the principles mentioned for the "X2" divider. But the "X10" divider provides a ten-to-one voltage division ratio, rather than the two-to-one ratio provided by the "X2" voltage divider.

But unless we provide some way for compensating the high-frequency response of the voltage-divider circuit, the "X2" voltage divider will be deficient in high-frequency response. This problem is similar to the one we encountered in connection with voltage-divider probes (see paragraph

3 of Sec. 4-2). And we meet the problem in a similar way. We adjust the variable capacitor C_3 so that displayed square waves have the flattest tops. This adjustment enables us to meet requirement 2 of Sec. 4-6.

We note that the resistance across the input connector still totals 1 megohm--consisting of two 500,000-ohm sections in series. And we can adjust capacitor C_4 (using an input-capacitance standardizer as described in Sec. 4-5) so that the input-circuit shunt capacitance still has its specified value. This adjustment enables us to meet requirement 3 of Sec. 4-6.

As another example of a compensated voltage divider, we observe the "X10" divider that we substitute for the "X2" divider when we turn the volts-per-division switch to the .5-volt-per-division position. The functioning of this X10 divider is essentially the same as that of the X2 divider. You can check that (a) the voltage-division ratio is 10-to-1 (including the effect of R_1), and that (b) the resistance appearing across the input connector still totals 1 megohm. We adjust C_5 and C_6 by the same methods used for C_3 and C_4 , respectively. A minor circuit variation in the X10 voltage divider is the inclusion of C_7 . We add this capacitor so that, with a practical value of C_5 , we can keep the voltage-division ratio the same for high frequencies as it is for low frequencies.

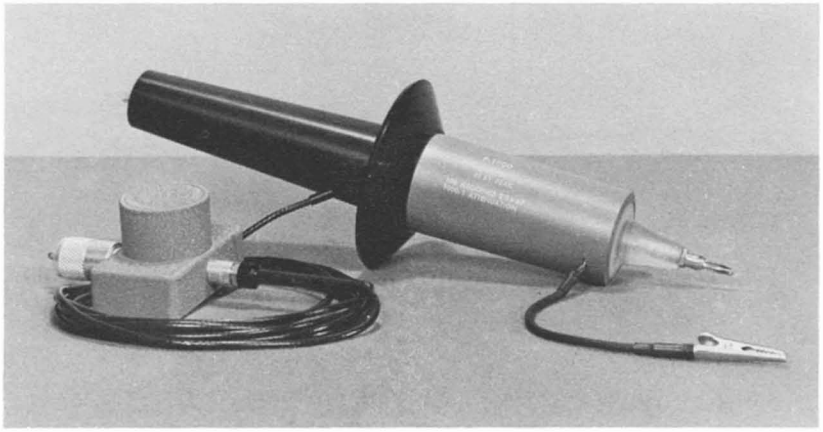

Fig. 4-10 A high-voltage probe that can handle input signals up to 25 kilovolts peak-to-peak.

4-8 High-voltage probes. Figure 4-10 shows one type of high-voltage probe for displaying high-amplitude waveforms on your oscilloscope. This probe operates in much the same way as the low-voltage voltage-divider probes of Sec. 4-2 that are shipped with the oscilloscope. Figure 4-11 shows the internal connections of the high-voltage probe, cable, and compensating box. To adjust the variable components in the compensating box, follow the instructions in the Instruction Manual for the probe.

The high-voltage probe of Fig. 4-10 performs according to these data:

Attenuation	1,000 to 1
Loading effect from probe tip to ground, with probe connected to oscilloscope	shunt resistance, 100 megohms shunt capacitance, 3 picofarads
Risetime (in conjunction with 540-Series oscilloscope and Type K plug-in preamplifier)	12 nanoseconds
Max. dc voltage rating	12 kilovolts
Max. ac voltage rating (at 10% max. duty factor, 0.1-second max. pulse duration, and 120° F max. temperature--see Fig. 4-12)	25 kilovolts peak-to-peak

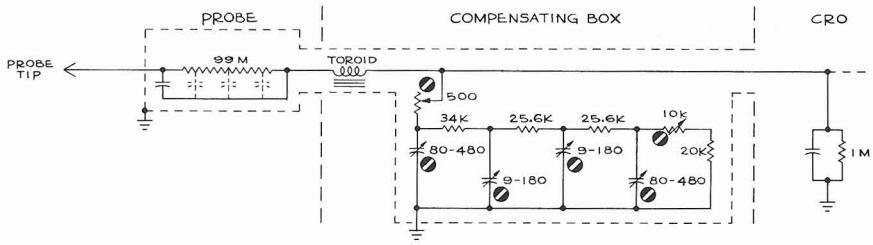

Fig. 4-11 Schematic of the high-voltage probe of Fig. 4-10.

If the input-signal voltage amplitude exceeds the rating of the kind of probe just discussed, you can consider capacitive voltage-divider probes (Fig. 4-13). These capacitive voltage-divider probes can handle signals whose amplitudes are of the order of 50 kilovolts.

4-9 How to display current waveforms. Sometimes we want to use an oscilloscope to display a varying current, rather than a varying voltage. But the oscilloscope vertical-deflection system is basically a voltage-sensitive system. One means of displaying a varying current is to insert a small value of series resistance R in the circuit that carries the current we want to display (see Fig. 4-14). The varying current in the circuit produces a signal voltage drop across R. The waveform of this voltage across R corresponds to the original current waveform (Sec. 1-4). Thus when we display the waveform of the signal voltage drop across R as shown in Fig. 4-14, in effect we display the current waveform in the original circuit. We can find the amplitude of the current waveform by Ohm's law--that is, we can divide the amplitude of the voltage waveform by R.

If the current waveform we display changes rapidly during any interval, we can minimize distortion in the displayed waveform by using a resistor R--and associated wiring--that introduce only small values of inductance and capacitance in the original circuit. For example, if we construct R of four small equal resistors in parallel we introduce less inductance than as if we used one large resistor of equivalent resistance.

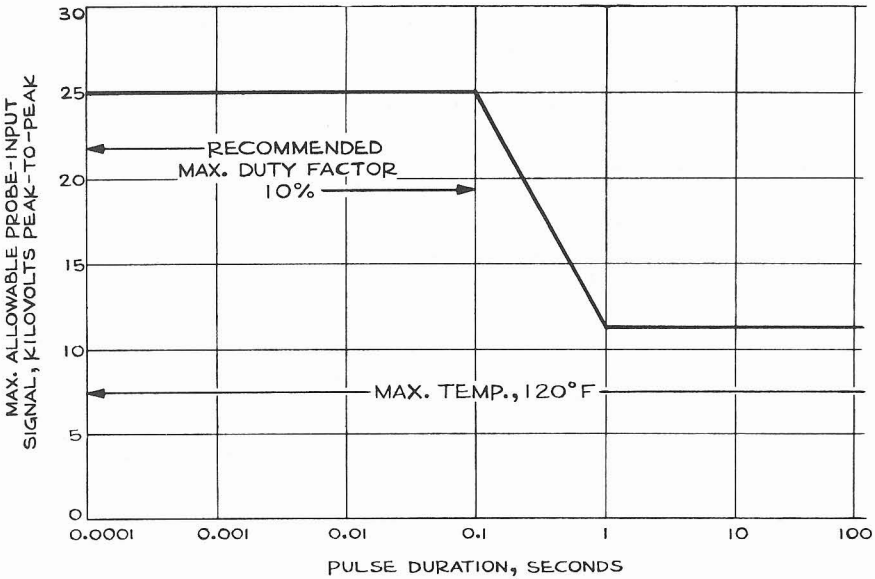

Fig. 4-12 Graph showing the maximum allowable input voltages we can apply to the probe of Fig. 4-10.

Sometimes it isn't practical to use the series-resistance method just discussed. For example, we might find it difficult (or even impossible) to insert a series resistor. Or we might want to display the currents in many different circuits so that the job of inserting series resistors requires too much time. Or perhaps even a small series resistance unduly disturbs the circuit we are investigating. In such cases we can consider a current probe (Fig. 4-15). This current probe includes a U-shaped core of magnetic material. We slip the U-shaped core over the conductor whose current we want to display. Then we complete the magnetic circuit by sliding a bar of magnetic material over the U. Now we have in effect a transformer. The circuit whose current we want to display forms a one-turn "primary winding." The probe itself includes a secondary winding on the U-shaped core. The secondary voltage that results from a "primary" current change drives the probe cable. We can connect the output end of the probe cable to either (1) a passive termination block or (2) a small current-probe amplifier. Either the passive termination block or the current-probe amplifier connects to the oscilloscope vertical-input connector. The current probe shown in Fig. 4-15 performs according to the following data:

	With passive termination block	With current-probe amplifier
Sensitivity (with oscilloscope VOLTS/DIV switch at .05)	2 ma/div or 10 ma/div	10 calibrated steps from 1 ma/div to 1 amp/div
Risetime (in conjunction with 540-Series oscilloscope and Type K plug-in preamplifier)	16 nanoseconds	20 nanoseconds
High-frequency 3-db-down point	20 mc	17 mc
Low-frequency 3-db-down point	approx. 850 cps at 2 ma/div; approx. 230 cps at 10 ma/div	50 cps

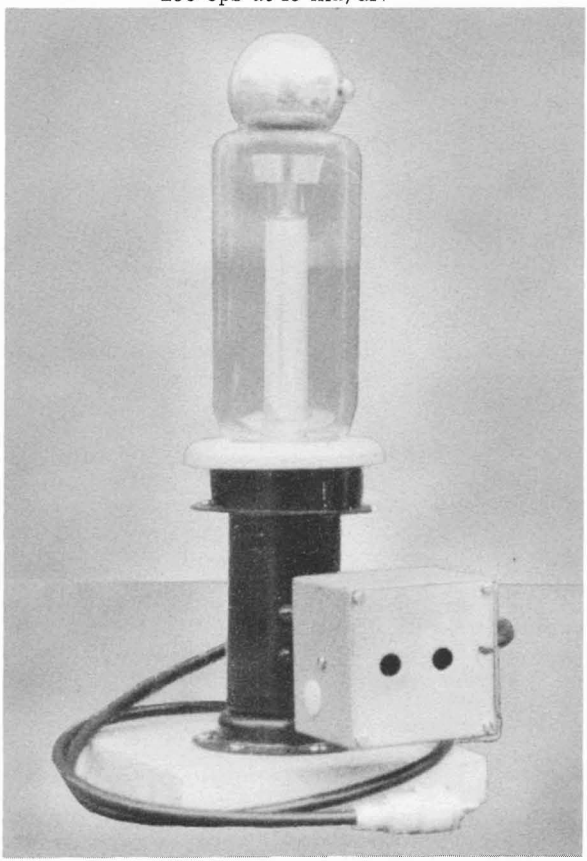

Fig. 4-13 A capacitive voltage-divider probe that can handle input signals of the order of 50 kilovolts peak-to-peak.

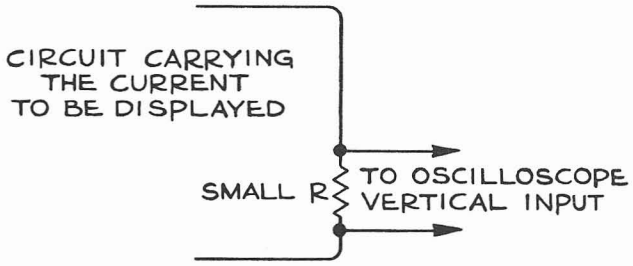

Fig. 4-14 Method of displaying a current waveform by inserting a small series resistance R.

Fig. 4-15 A current probe. By clipping the end of the probe over a wire we can use an oscilloscope to display the waveform of a varying current in the wire.

Chapter 5

PLATE-LOADED AMPLIFIERS

Figure 5-1 shows the circuit of the plate-loaded amplifier. The circuit shown is also called a resistance-coupled amplifier.* In oscilloscopes and related instruments, the plate-loaded amplifier is often used in push-pull form--but for simplicity we shall consider principally the single-ended form of plate-loaded amplifier.

5-1 Voltage gain. As we already know (Sec. 2-6), the polarity of the output signal delivered by a plate-loaded amplifier stage is opposite to the polarity of the input signal.

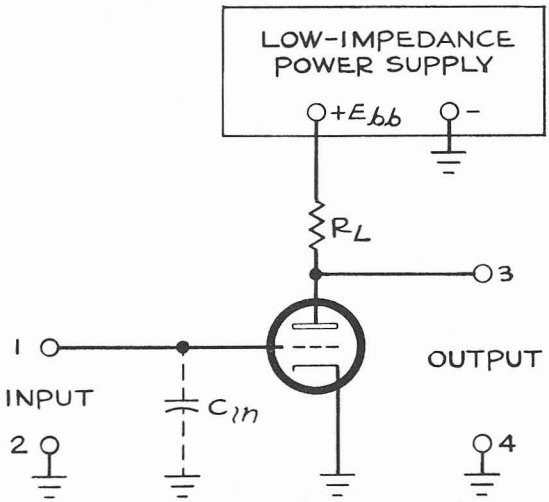

Fig. 5-1 Plate-loaded amplifier. As described in the text, the voltage gain is $A_v = \mu R_L/(R_L + r_p)$. If r_p is large (as in a pentode) the voltage gain is approximately $A_v = g_m R_L$. The internal output impedance is R_L in parallel with r_p. The input capacitance C_{in} is the sum of the grid-to-cathode and grid-to-heater capacitances (plus the grid-to-screen and grid-to suppressor capacitances in a pentode), plus $(1 + A_v)$ times the grid-to-plate capacitance.

The amplitude of the output signal voltage from a plate-loaded amplifier is usually appreciably greater than the input signal voltage we apply to the grid of the tube. We refer to the ratio of the output voltage to the input voltage as the voltage gain A_v of the amplifier. We can calculate the voltage gain by means of the formula

$$A_v = \frac{\mu R_L}{R_L + r_p} \qquad \text{Eq. (5-1)}$$

where μ is the amplification factor of the tube, R_L is the value of the plate-load resistance, and r_p is the dynamic plate resistance of the tube.

If the plate resistance r_p is very large, Eq. (5-1) can be simplified to

$$A_v = g_m R_L \qquad \text{Eq. (5-2)}$$

*For simplicity, we omit here any provision for the fixed bias voltage that is required to keep the average grid voltage negative with respect to the cathode voltage.

where g_m is the grid-plate transconductance (mutual conductance) of the tube. We can use Eq. (5-2) when the amplifier tube is a pentode, or with fair accuracy when the tube is a triode having a large value of plate resistance.

When we use a pentode amplifier tube in conjunction with a large value of load resistance R_L, the voltage gain of the amplifier stage might be several hundred or even more. At the other extreme, if we use a low-μ triode in conjunction with a small value of R_L, then the voltage gain is small--say, three or four.

5-2 Output impedance. Let us consider the amplifier of Fig. 5-1. In the usual case, the power supply is effectively a short circuit between the $+E_{bb}$ terminal and ground, as far as signal variations are concerned. Then the internal signal impedance of the amplifier when we look back into the output terminals 3 and 4 is effectively the dynamic plate resistance r_p of the tube in parallel with the load resistance R_L.

Clearly, this internal impedance of the amplifier is small (that is, the amplifier is approximately a constant-voltage source) if either or both of these conditions apply:

1. The load resistance R_L is small.

2. Or the plate resistance r_p of the tube is small (as in the case of certain triodes).

On the other hand, the equivalent internal impedance of the amplifier is large (that is, the amplifier is approximately a constant-current source) if both of these conditions apply:

1. The load resistance R_L is large.

2. And the plate resistance r_p of the tube is large (as in the case of pentodes and certain triodes).

The internal output impedance of a plate-loaded amplifier generally falls in a range from perhaps a few hundred ohms to several thousand ohms.

5-3 Input capacitance. The input circuit (terminals 1 and 2) of the amplifier of Fig. 5-1 presents an appreciable amount of capacitance to a varying input signal. We shall call this capacitance C_{in}. It includes these effects:

1. The grid-to-cathode and grid-to-heater capacitances. These capacitances represent simply a shunt capacitance between the input terminals 1 and 2.

2. The grid-to-screen and grid-to-suppressor capacitances, if the tube is a pentode. (The screen grid and the suppressor are ordinarily at or near ground potential as far as signal variations are concerned. Thus the grid-to-screen and grid-to-suppressor capacitances are effectively simple shunt capacitances between terminals 1 and 2.)

3. The grid-to-plate capacitance C_{gp}. Let's consider the effect of the grid-to-plate capacitance in terms of the capacitive loading it causes across the input terminals 1 and 2.

Suppose, for example, that the amplifier of Fig. 5-1 has a voltage gain of 10. And suppose we apply an input signal that drives the grid more negative by an amount equal to 1 volt. As a result, the plate output voltage becomes 10 volts more positive. Thus, effectively, we increase the voltage across C_{gp} by 11 volts. Note that we thus require our signal source to do two things: (a) drive the grid negative by 1 volt, and (b) supply electron current to the grid sufficient to charge C_{gp} through a range of 11 volts. This electron current, of course, is the same as that which would have been needed to charge a capacitance that is 11 times as great as C_{gp} through a range of 1 volt.

Thus, when the voltage gain is 10, C_{gp} has the same effect on the input capacitance as if it were a grid-to-ground capacitance that is 11 times as great as C_{gp}. In fact, when the voltage gain has any value A_v, the grid-to-plate capacitance C_{gp} causes an input-capacitance effect equal to $C_{gp}(1 + A_v)$.*

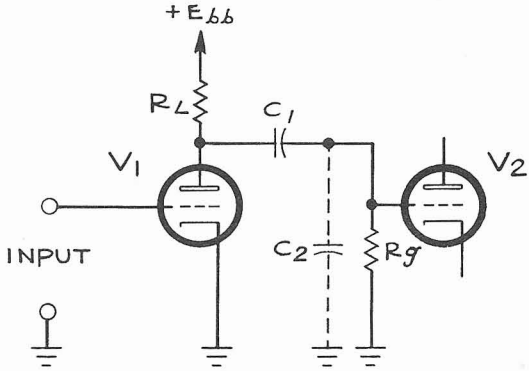

Fig. 5-2 Interstage-coupling system. The total shunt capacitance C_2 across the coupling system includes C_p, the plate-to-ground capacitance of V_1; C_{stray}, the capacitance-to-ground of wiring and components; and C_{in}, the input capacitance of V_2. Figure 5-1 describes C_{in}.

5-4 Peaking or compensating circuits. In Secs. 2-7 through 2-9 we studied the effect of the unavoidable shunt capacitances that exist in an amplifier interstage-coupling system like that of Fig. 5-2. We found that the shunt capacitance C_2 includes C_p, the plate-to-ground capacitance of V_1; C_{stray}, the capacitance to ground of the wiring and components; and C_{in}, the input capacitance of V_2. We considered the makeup of C_{in} in Sec. 5-3.

The overall effect of these shunt capacitances, we found, is to increase the risetime of the amplifier and thus to reduce the ability of the amplifier to transmit rapidly changing waveforms. Here we shall briefly consider some ways of counteracting this undesirable effect of shunt capacitance. The circuits that effect the desired improvement in risetime are called peaking circuits or compensating circuits.

*The influence of C_{gp} on the input capacitance is a manifestation of what is called the Miller effect.

In the peaking circuits that we shall study, we accomplish the risetime improvement by inserting appropriate values of inductance at one or more points in the interstage-coupling system. However, our choice of the kind of peaking circuit affects not only the amount of risetime improvement, but this circuit choice also affects some other important characteristics of the amplifier as well. In this book we can't cover fully the various performance factors that a designer has to consider. Therefore we shall consider principally the risetime improvement that the peaking circuit provides. But we can mention briefly some of the other characteristics that are affected by peaking:

1. The amount of overshoot, if any. In some actual amplifiers, we might not object to considerable overshoot--if we can use this overshoot to make up for any rounding of the corner in the step response of some other stage or device that is in the circuit. For simplicity, however, we shall consider here principally cases where we hold the overshoot to zero or to a very small value.

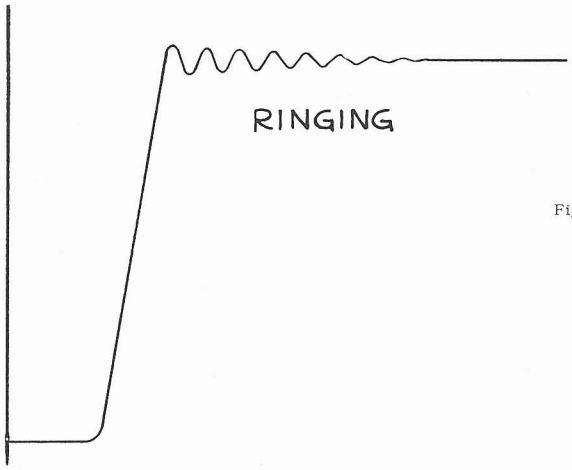

Fig. 5-3 The shunt capacitance C_2 (Fig. 5-2) increases amplifier risetime. Therefore we often include a peaking (compensating) circuit to reduce the risetime. If we improperly adjust the peaking circuit, one of the effects might be "ringing"--a damped oscillation along the top of an amplified square wave as shown here.

2. The amount of ringing that might occur. Ringing, as brought out by square-wave testing, consists of a damped oscillation along the top of the output square wave (Fig. 5-3). Important items are the amplitude and the frequency of the ringing, and the rate at which it dies out (damping). Sometimes, when we construct an amplifier to operate in some required manner, the amplifier also unavoidably adds an unwanted ringing to the output waveform. But this unwanted ringing might cause no trouble if its frequency is so high that a later stage or device won't transmit appreciable amounts of the damped oscillation. Here, however, we shall consider cases where we avoid ringing or keep it to a very small amplitude.

3. The amount of delay that will be experienced by a sine-wave signal, as a function of its frequency. In some uses, we might want a sine-wave signal to undergo a constant number of degrees of phase shift, regardless of its frequency. More often we ideally want a signal to undergo a fixed

amount of time delay--in nanoseconds, for example. (This latter requirement is equivalent to requiring the phase shift to vary in a linear manner with respect to frequency.)

4. The extent of the high-frequency response--that is, the upper 3-db-down frequency. As we have learned, the upper 3-db-down frequency of the amplifier stage is given by $B = K/T_R$ --where K is approximately equal to 0.35. Thus, when we reduce the risetime by peaking, we expect the upper 3-db-down frequency to be higher.

5. The cutoff rate of the frequency response at the upper end of the amplifier passband. In some cases, we want the amplifier response to cut off rapidly above a certain frequency. In other cases, we are happy to have the amplifier respond to frequencies beyond its nominal passband, even though at these higher frequencies we might not realize the full rated gain of the amplifier.

6. The flatness of the frequency response curve within the amplifier passband.

From the above considerations, we see that there isn't really a "best" design for all amplifier applications. The designer must weigh various compromises in amplifier characteristics so that his final design will be suitable for its intended use.

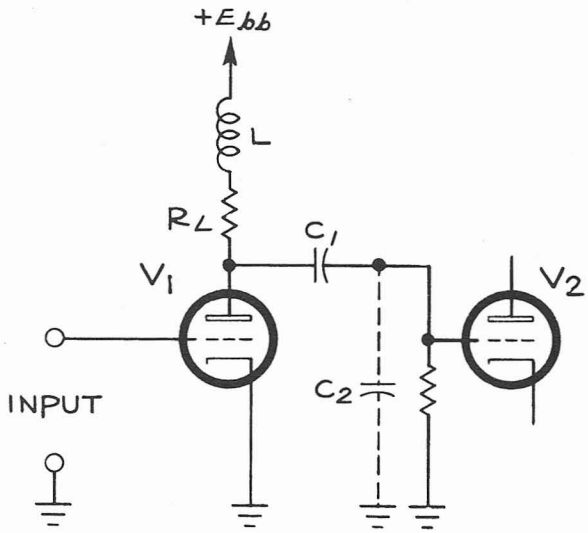

Fig. 5-4 Shunt-peaking circuit for reducing amplifier risetime.

If we apply an input negative-going voltage step to the grid of an amplifier tube, then a resulting positive-going voltage step appears at the output of the succeeding interstage-coupling system. Let's now consider how to shorten the risetime of this output voltage step.

Note that we usually make the coupling capacitance C_1 and the grid resistor R_g (Fig. 5-2) so large that they have only a negligible effect on the risetime.

5-5 Shunt peaking. A simple arrangement for improving (reducing) the risetime of the interstage-coupling system is shown in Fig. 5-4. The arrangement, called shunt peaking, consists of adding an inductor L in series with the plate-load resistor R_L. This circuit functions as follows:

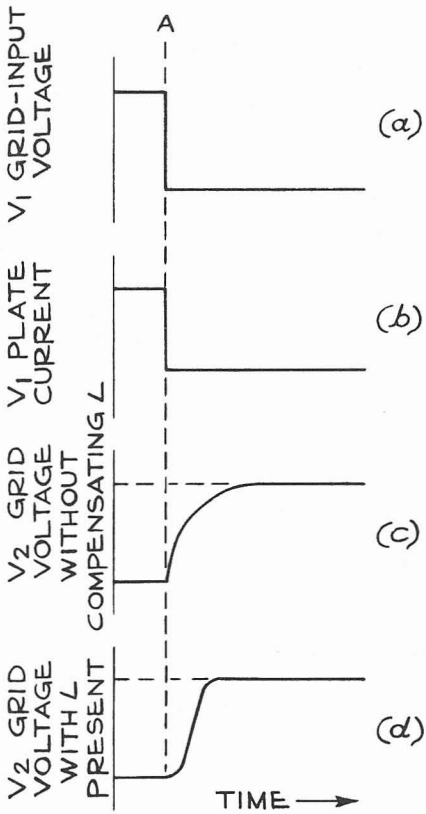

Fig. 5-5 (a) A negative-going input voltage step we can use to test the response of the amplifier of Fig. 5-4.

(b) V_1 plate-current variation when we apply the input waveform a.

(c) If we don't include the peaking inductor L, the V_1 plate-output voltage waveform resembles graph c (see Sec. 2-8).

(d) The current in the peaking inductor L can't change abruptly. Since at instant A the V_1 plate current drops abruptly as shown in waveform b, the current in L after instant A includes electrons from C_2. Thus the V_1 plate-output voltage can rise more rapidly when we include L.

1. If at some instant A we apply a negative-going voltage step (Fig. 5-5a) to the grid of V_1, the plate current falls abruptly (Fig. 5-5b). In a circuit that doesn't include L, the resulting output-signal voltage at the plate of V_1 rises according to a curve like Fig. 5-5c. As we learned in Sec. 2-8, this curve corresponds to an RC charging curve involting R_L and C_2.

2. Now consider what happens when we include the inductor L in Fig. 5-4. At instant A, the negative-going grid-input signal of Fig. 5-5a forces the plate current in V_1 abruptly down (Fig. 5-5b). But the inductor L doesn't let the current in R_L and L drop abruptly. Clearly, then, in the interval

immediately following instant A, the circuit involving R_L and L has to draw electrons from some new source--other than the V_1 plate. This new electron source is the upper terminal of C_2. This loss of electrons from the upper terminal of C_2 changes the voltage at that terminal rapidly in the positive direction. Thus the plate-output signal voltage actually rises according to a curve like Fig. 5-5d. Note that we thus shorten the risetime of the coupling system when we include the inductance L.

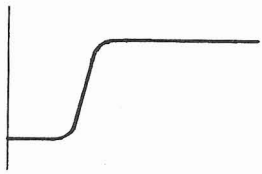

Fig. 5-6 Plate-output voltage of V_1 (Fig. 5-4) for a voltage-step input, when we properly adjust L (optimal compensation).

We can calculate the value of L that gives the shortest risetime without overshoot from the formula

$$L = \frac{R_L^2 C_2}{4} \quad \text{microhenrys} \qquad \text{Eq. (5-3)}$$

where R_L is in kilohms and C_2 is in picofarads. When we make L equal to the value given by Eq. (5-3), we say that the interstage-coupling system is optimally compensated, or critically damped. Figure 5-6 shows an example of the square-wave response of an amplifier stage that is optimally compensated.

If L has a value smaller than that given by Eq. (5-3), the interstage-coupling system is said to be undercompensated, or to have greater than critical damping. In such a case, the risetime of the amplifier is greater than it would be with optimal compensation. The square-wave response of such an amplifier stage is shown in Fig. 5-7. Note that the output waveform of this amplifier takes an unusually long time to rise through the first and the last few percent of its excursion (regions M and N in Fig. 5-7).

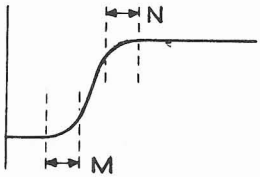

Fig. 5-7 Plate-output voltage of V_1 for a voltage-step input, when we adjust L for too little inductance (undercompensation). The risetime is greater than it would be with optimal compensation. In particular the output waveform takes an unusually long time to rise through the first and last few percent of its excursion (regions M and N).

If L has a value larger than that given by Eq. (5-3), the interstage-coupling system is said to be overcompensated, or to have less than critical damping. Figure 5-8 shows the square-wave response of such an amplifier. Here the risetime is shorter than in the optimally compensated case (Fig. 5-6). But overshoot now appears.

If L has a value considerably greater than that given by Eq. (5-3), ringing might occur.

Suppose we want the risetime of the interstage-coupling system to have some value T_R nanoseconds, and suppose we want the greatest possible voltage gain with no overshoot. We can select R_L approximately as follows:

$$R_L = \frac{T_R}{1.535C_2} \quad \text{kilohms} \qquad \text{Eq. (5-4)}$$

where C_2 is the total shunt capacitance in picofarads.* Then we can estimate the required value of L from Eq. (5-3). The precise value of L required to give the shortest risetime without overshoot is usually quite critical. Therefore we usually make L an adjustable inductor by providing it with a movable core.

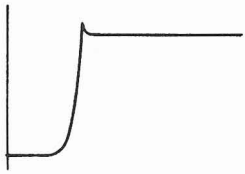

Fig. 5-8 Plate-output voltage of V_1 (Fig. 5-4) for a voltage-step input, when we adjust L for too much inductance (overcompensation). The risetime is very short but the output waveform exhibits overshoot.

When we use optimal compensation, the risetime of the shunt-peaked amplifier stage is only 0.707 times the risetime of the same stage without the peaking inductor. By using values of L and R_L somewhat different from those given by Eqs. (5-3) and (5-4), we can make the risetime only 0.588 times the risetime of the same stage without the peaking inductor--and the overshoot will be only 1 percent.

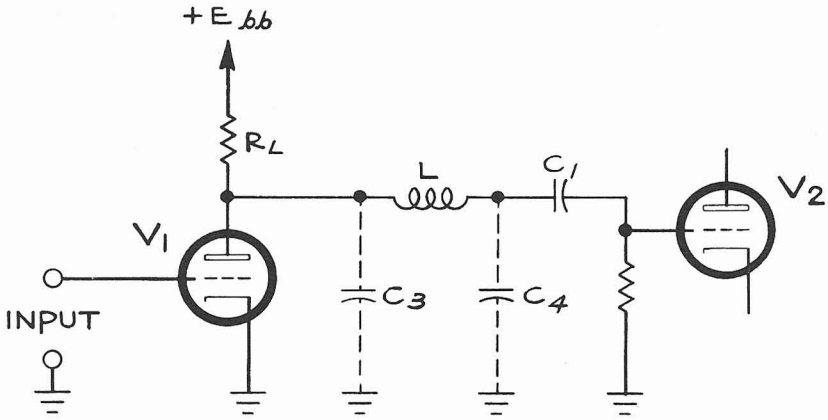

Fig. 5-9 Series-peaking circuit for reducing amplifier risetime.

*We can often estimate the value of C_2 rather closely--or while the amplifier is turned on we can measure C_2 with, for example, a Tektronix Type 130 L-C Meter.

A modified form of the shunt-peaking circuit uses a capacitance (sometimes a stray capacitance) across L. Proper proportioning of L, R_L, and the capacitance across L makes the risetime only 0.566 times the risetime of the same stage without peaking. At the same time we get a nearly constant time delay for sine-wave frequencies within the amplifier passband, along with an overshoot of only 1 percent.

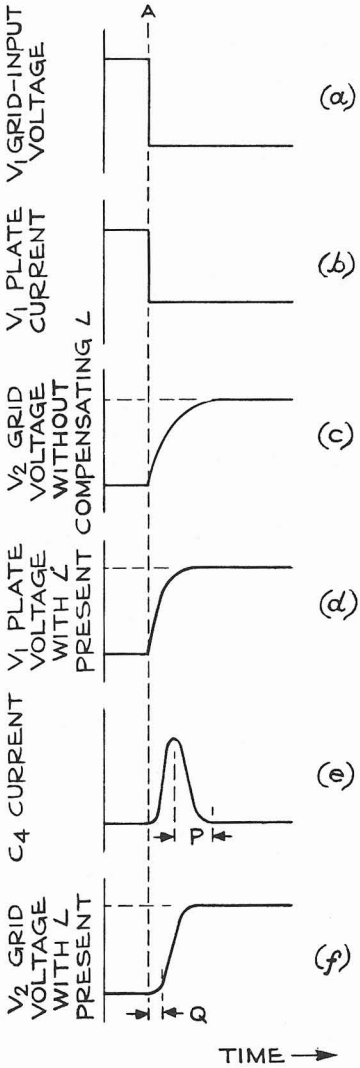

Fig. 5-10 (a) A negative-going input voltage step we can use to test the response of the amplifier of Fig. 5-9.

(b) V_1 plate-current variation when we apply the input waveform a.

(c) If we don't include the inductor L, the V_1 plate-output voltage waveform resembles graph c (see Sec. 2-8).

(d) L prevents the current in C_4 from rising abruptly at instant A. Thus the plate voltage (across C_3) can rise faster because C_3 is smaller than the total shunt capacitance $C_3 + C_4$.

(e) Current in C_4 rises gradually through L. As the voltage across C_4 approaches its final value, the current in C_4 drops (region P).

(f) The signal voltage that reaches the grid of V_2 is the integral of the current in C_4. Note that (1) the risetime of waveform f is shorter than the risetime of waveform c that would appear if L were absent; and (2) the output response undergoes a time delay Q.

5-6 Series peaking. Another scheme for improving the risetime of an interstage-coupling system is shown in Fig. 5-9. We call this method series peaking. Here we separate the total shunt capacitance (C_2 in Fig. 5-2)

into two parts by inserting the inductor L. These two parts of C_2 we shall call C_3 and C_4. C_3 consists of the plate-to-ground capacitance C_p of V_1 plus that portion of C_{stray} that is associated with the wiring and components connected to the plate of V_1. C_4 consists of the input capacitance C_{in} of V_2 plus that portion of C_{stray} that is associated with the wiring and components connected to the grid of V_2.

Designers often take the condition $C_4 = 2C_3$ as a favorable design condition. You can often come close to this arrangement by putting the coupling capacitor C_1 either at one end of L or at the other--so that the capacitance of C_1 to ground is either a part of C_3 or a part of C_4. But if you use dc coupling (described later in this chapter) C_1 is absent.

The series-peaking circuit functions as follows:

1. If at some instant A we apply a negative-going voltage step (Fig. 5-10a) to the grid of V_1, the plate current falls abruptly (Fig. 5-10b). Without L, the output signal voltage at the plate of V_1 rises according to a curve like Fig. 5-10c, as we learned in Sec. 2-8.

2. When L is present, it prevents the current in C_4 from rising abruptly at instant A. In effect, at the start of the voltage rise at the plate of V_1 the inductor L isolates C_4 from the plate of the tube. Thus the plate voltage can rise faster because the shunt capacitance C_3 is smaller than the total shunt capacitance C_2. This rising plate voltage is graphed in Fig. 5-10d.*

3. As the plate voltage of V_1 rises according to Fig. 5-10d, C_4 begins to charge through L so that the voltage at the upper plate of C_4 rises at each instant toward the voltage at the plate of V_1. The charging current in C_4 is graphed in Fig. 5-10e. When the voltages of both C_3 and C_4 have nearly reached their final values, the charging current in C_4 again drops toward zero (region P in Fig. 5-10e).

4. The voltage across C_4 is of course the integral of the charging current in C_4. We can therefore sketch the output waveform of the interstage-coupling system by drawing an integral curve for Fig. 5-10e, using either the method of Sec. 1-14 or the method of Sec. 3-5. The resulting output signal voltage is graphed in Fig. 5-10f. Note that we have decreased the risetime of the coupling system by inserting the inductance L.

Observe another effect, too--the output step function of Fig. 5-10f is measurably delayed with respect to the input step function of Fig. 5-10a. In fact, one way of looking at the operation of the circuit is to consider that it improves the risetime by storing signal energy at the start of an output-voltage rise (region T of Fig. 5-11) and releasing that energy at a later time, near the end of the output-voltage rise (region U of Fig. 5-11).

---

* After the start of the rise, the plate-voltage curve begins to be affected by current that flows in the circuit comprising C_4, L, and R_L. This current is discussed in the following step 3.

For a given small overshoot, the series-peaking system gives a risetime that is somewhat shorter than that provided by the simple shunt-peaking system. But the risetime of the series-peaking system is only slightly better than that of a shunt-peaking system that includes a suitable capacitance shunting the peaking inductor (last paragraph of Sec. 5-5).

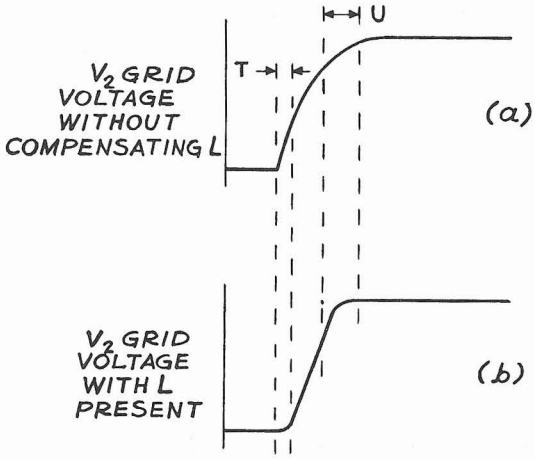

Fig. 5-11 (a) V_1 plate-output voltage waveform in the absence of L (Fig. 5-9). This is the waveform of Fig. 5-10c. When we include L, the circuit stores energy during the interval T of waveform a. The circuit releases this stored energy during the later interval U.

(b) The signal - voltage waveform reaching the grid of V_2 (Fig. 5-9). Because the circuit stores energy during interval T and releases this energy during interval U, two things happen: (1) the risetime is reduced, and (2) the output waveform at V_2 grid is delayed.

The series-peaked circuit has a tendency toward overshoot and ringing. Note that L, C_3, and C_4 constitute a resonant circuit that tends to produce damped oscillations when we apply a rapidly changing waveform. We often connect a resistor across L, to reduce or eliminate ringing by absorbing the energy of any damped oscillations that might tend to occur.

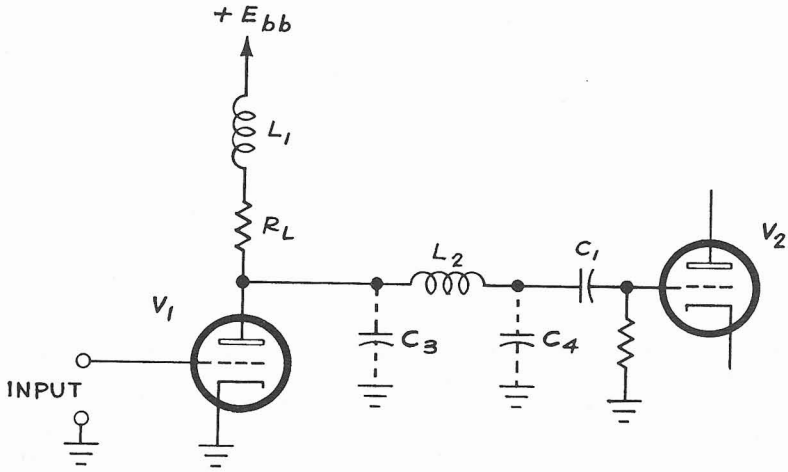

Fig. 5-12 Combination-peaking circuit, including both shunt-peaking and series peaking inductors.

5-7 Combination peaking. We can realize a further improvement in risetime for a given amount of overshoot if we combine features of shunt peaking with those of series peaking. Figure 5-12 shows an example of an interstage-coupling circuit that combines shunt with series peaking. We call this system combination peaking or shunt-series peaking. As an example of the performance of such a circuit, one design results in a risetime that is only 0.453 times the risetime of the same amplifier without compensation, with an overshoot of 3 percent.

We can achieve especially good results by coupling the series-peaking inductor magnetically to the shunt-peaking inductor. In fact, we can combine these two inductors in the form of a single tapped inductor, called a "T coil," as shown in Fig. 5-13. Such an arrangement can be made capable of a risetime that is only about 0.33 times the risetime of the same circuit without compensation.

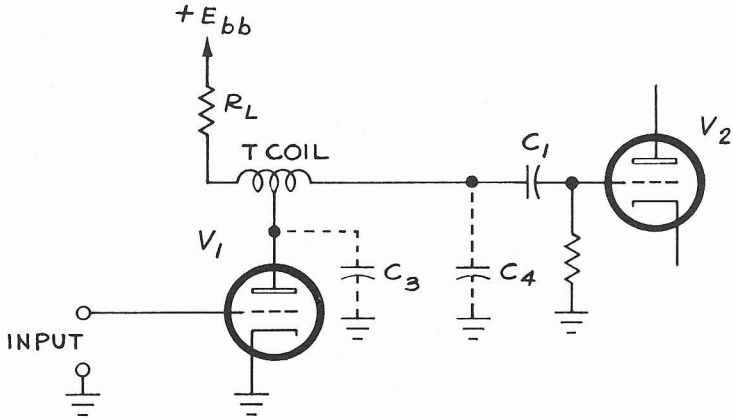

Fig. 5-13 Combination-peaking circuit (Fig. 5-12), but including mutual inductance between shunt-peaking and series-peaking inductors. We call the combined peaking coil a *T* coil.

5-8 Square-wave response versus high-frequency response. When we use a peaking system, we don't control just the risetime of an amplifier stage. One of the other performance characteristics, in addition to the risetime, that we affect through the use of a peaking system is the high-frequency cutoff rate (Sec. 5-4).

The cutoff rate--the way that the amplifier gain tapers off with increasing frequency--is determined by (1) the form of the peaking or compensating circuit (shunt, series, etc.), and (2) the degree of compensation (how much we improve risetime by peaking). There isn't any simple way to predict, for all circuits, just how the peaking will affect the high-frequency response. But we can make some general statements that tell us approximately how a given degree of peaking or compensation affects the high-frequency response.

If we use optimal compensation, we get the shortest risetime that doesn't result in overshoot. The resulting response to a step input signal is shown in Fig. 5-14a. Figure 5-14b shows the general form of the corresponding high-frequency response curve that we get with optimal compensation. Note that the amplifier gain falls off at a smoothly varying rate. In the ideal case, the high-frequency rolloff would follow a curve called a gaussian curve. We can tell roughly whether a given frequency-response curve approximates a gaussian curve as follows: First, we note the 3-db-down frequency (that is, the frequency where the amplifier gain is 0.707 times the gain at some medium frequency). Then we note the 12-db-down frequency (the frequency where the gain is 0.25 times the medium-frequency gain). If the amplifier high-frequency rolloff approximates a gaussian curve, then the 12-db-down frequency is about twice the 3-db down frequency.

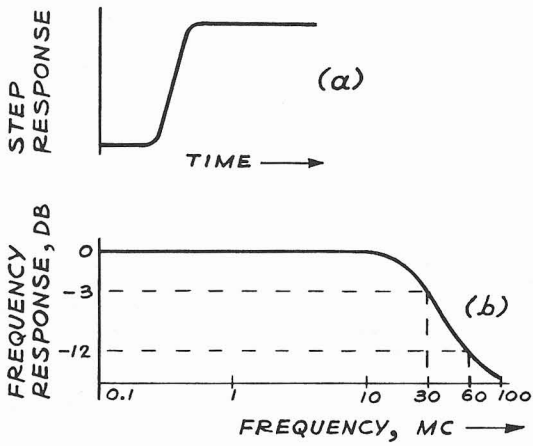

Fig. 5-14 (a) Step response of optimally compensated amplifier. This response shows the shortest risetime that we can achieve without overshoot.

(b) Frequency response of optimally compensated amplifier. The output falls off smoothly as we increase the input sine-wave frequency. This fall-off curve approximates a gaussian curve, where the 12-db-down frequency is twice the 3-db-down frequency.

If we use greater than optimal compensation, we further shorten the risetime but we get overshoot. The resulting response to a step input signal is shown in Fig. 5-15a. Figure 5-15b shows the general form of the corresponding high-frequency response curve that we get with greater than optimal compensation. Note that the amplifier response might show a peak as the input frequency increases. Then, with a further frequency increase, the response cuts off rapidly. The height of the peak and the sharpness of the cutoff depend upon the degree of overcompensation. Severely overcompensated amplifier stages tend to ring at approximately the cutoff frequency when we apply rapidly changing input signals. If we decrease the plate-load resistor R_L in such an overcompensated stage, we reduce the voltage gain. But we can then adjust the compensating inductance(s) to change the shapes of the responses shown in Figs. 5-15a and b to those shown in Figs. 5-14a and b.

If we use less than optimal compensation, we get a risetime that could be shortened by increased compensation (Fig. 5-16a). In particular, the output response to an input step waveform takes an unduly long time to rise through the first and the last few percent of its excursion (Sec. 5-5). Figure 5-16b shows the general form of the high-frequency response curve that

we get with less than optimal compensation. Note that the response falls off more slowly with increasing frequency than it would according to the gaussian response curve. By increasing the plate-load resistor R_L in such an undercompensated stage, we can increase the voltage gain. Then, by adjusting the compensating inductance(s), we can change the shape of the responses shown in Figs. 5-16a and b to those shown in Figs. 5-14a and b.

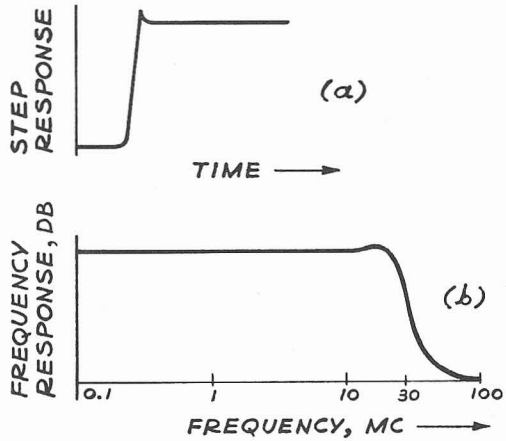

Fig. 5-15 (a) Step response of overcompensated amplifier. Note the overshoot. The output might also exhibit ringing (damped oscillation along the flat top of the waveform).

(b) Frequency response of overcompensated amplifier. Typical overcompensation effects include (1) rise in output amplitude as we increase the input frequency, then (2) sharp fall-off in output amplitude as we increase the input frequency further.

When we adjust the peaking inductors in the vertical amplifier of an oscilloscope, we customarily apply a square-wave input signal and adjust the inductors for the greatest values of inductance that do not result in observable overshoot in the display. Then we check the frequency response with a sine-wave generator to see that the 3-db-down frequency is at least as high as the value specified for our particular type of oscilloscope.

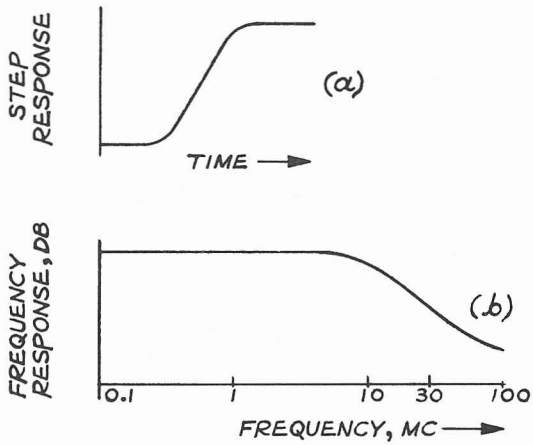

Fig. 5-16 (a) Step response of undercompensated amplifier. Risetime is longer than it would be with optimal compensation. And the output waveform takes an unusually long time to rise through the first and last few percent of its excursion.

(b) Frequency response of undercompensated amplifier, showing typical long, slow falloff in output amplitube as we increase the input frequency.

5-9 Low-frequency response. Let us consider the low-frequency response of the amplifier shown in Fig. 5-1. This amplifier is redrawn in Fig. 5-17.

If we apply a sine-wave signal to the input terminals of V_1, an amplified and inverted signal voltage appears at the plate of V_1. This signal voltage causes a signal current to flow in C_1 and R_g in series. The signal voltage drop across R_g, resulting from the signal current, is the effective output signal voltage from V_1 that is applied to the grid of V_2.

At medium and high frequencies, the reactance of the coupling capacitor C_1 is negligible. Therefore there is no appreciable signal voltage drop across C_1, so that the signal-voltage drop across R_g is essentially the same as the signal voltage developed at the plate of V_1. Thus, at medium and high frequencies, usual values of C_1 have no appreciable effect on the transmission of the signal voltage from the plate of V_1 to the grid of V_2.

But if we apply sine waves of lower and lower frequencies to the input terminals of the amplifier, the reactance of C_1 becomes greater and greater. As the reactance of C_1 increases as a result of this reduction of signal frequency, the signal current in C_1 causes an increasing signal-voltage drop across C_1. But the sum of the signal-voltage drop across C_1 plus the output-signal voltage across R_g must always equal the total signal voltage developed at the plate of V_1. Therefore, at low frequencies, the signal voltage that reaches the grid of V_2 is smaller than the plate signal voltage of V_1 by the amount of the voltage drop across C_1.

We often need to know the lower 3-db-down frequency f_b of a given amplifier--that is, we need to know the value of that low frequency at which the voltage gain is 0.707 times the gain at medium frequencies. We can find f_b by means of the formula

$$f_b = \frac{1}{2\pi R_g C_1} \qquad \text{Eq. (5-5)}$$

As we go to lower and lower frequencies the voltage gain progressively falls off, becoming equal to zero (no signal transmission) at zero cycles--that is, at dc.

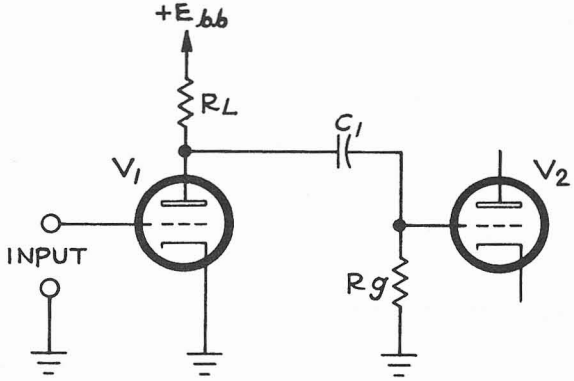

Fig. 5-17 The plate-loaded amplifier, redrawn.

Suppose we apply an input negative-going square-wave signal to the grid of V_1 in the amplifier of Fig. 5-17. The resulting signal voltage reaching

the grid of V_2 is an amplified positive-going square wave. If the flat top of this amplified square wave has a long duration, the flat top tends to sag (Sec. 2-11). The amount of the sag depends upon the relationship between the duration of the flat top and the time constant $R_g C_1$. Figure 5-18a shows the sag that exists in the amplified square wave when the time constant $R_g C_1$ is short compared with the duration of the flat top of the square wave. A corresponding frequency-response curve for such a case (where $R_g C_1$ is small) is shown in Fig. 5-18b.

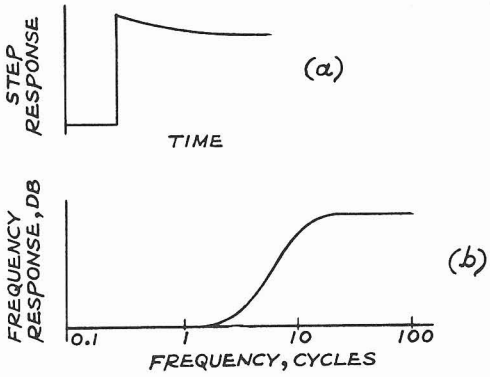

Fig. 5-18 (a) Step response of the amplifier of Fig. 5-17 if the time constant R_gC_1 is relatively short. Note that the top of this output waveform exhibits appreciable sag (Sec. 2-11).

(b) Low-frequency response of the amplifier of Fig. 5-17 if the time constant R_gC_1 is relatively short.

If we increase the time constant $R_g C_1$ --by increasing the value of either R_g or C_1, or both--we reduce the amount of sag in a given output square wave (Fig. 5-19a). At the same time, we extend the frequency response to lower frequencies (Fig. 5-19b).

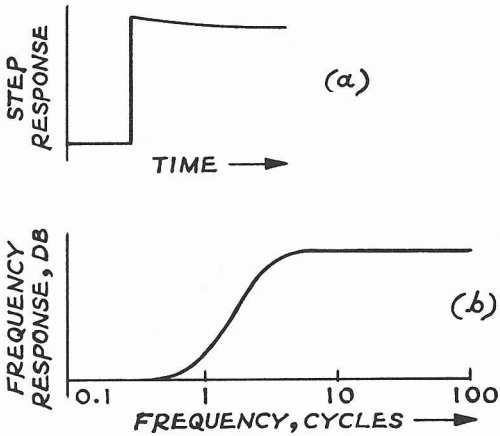

Fig. 5-19 (a) Step response of the amplifier of Fig. 5-17 if we increase the time constant R_gC_1. The sag is smaller than in Fig. 5-18a.

(b) Low-frequency response of the amplifier of Fig. 5-17 if we increase the time constant R_gC_1. The frequency response extends to lower frequencies than in the case of Fig. 5-18b.

5-10 Dc-coupled amplifiers. Sometimes we want to transmit signal variations whose frequencies are extremely low. Or we might want to transmit steady dc information such as beam-positioning voltages for a cathode-ray tube. The capacitively-coupled circuit of Fig. 5-17 doesn't serve these

purposes because the coupling capacitor C_1 cannot transmit "dc" information. Thus we refer to a circuit that uses a coupling capacitor as an ac-coupled circuit.

Figure 5-20 shows a dc-coupled amplifier that can transmit not only medium- and high-frequency signals but also dc information and very-low-frequency signals as well. Observe that there are no series coupling capacitors that would block dc or low-frequency signal components.

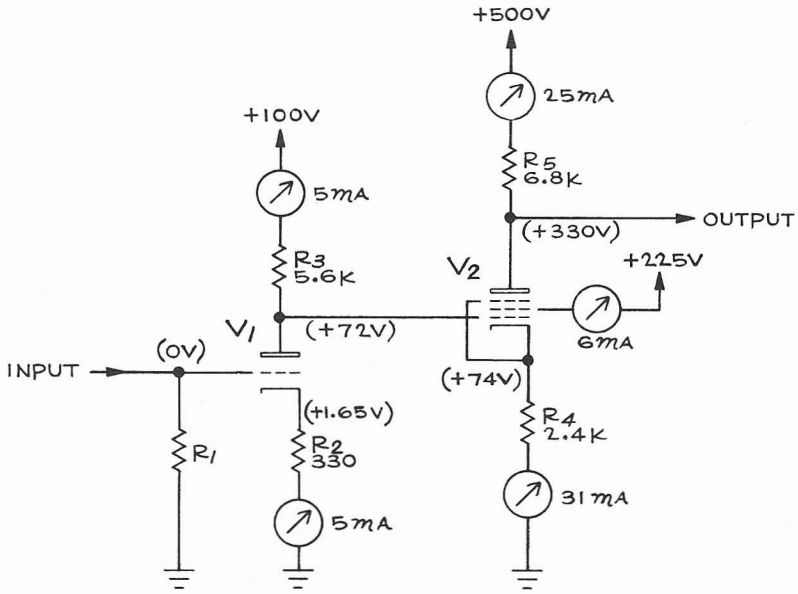

Fig. 5-20 A dc-coupled amplifier, illustrating the dc levels that might exist in a typical case at input, output, and various other circuit points.

The tubes in this particular amplifier receive their negative grid-to-cathode bias voltages by virtue of the cathode-current voltage drops across biasing resistors in the cathode leads to the tubes.

Since there are no coupling capacitors, the grid of each tube operates at a dc potential equal to that of the plate of the preceding tube. And since the plate voltage of an amplifier tube must be more positive than the grid voltage of the tube, we must generally provide the plate circuit of each succeeding tube with a positive power-supply voltage that is greater than the voltage we provided for the preceding plate circuit. We can consider this special power-supply requirement as the price we pay for the ability to amplify dc and very-low-frequency information.

If the dc-coupled amplifier is to amplify rapidly changing waveforms as well as dc and low-frequency information, we can apply customary peaking circuits as described in Secs. 5-4 through 5-7.

5-11 Dc levels. When a dc-coupled amplifier is not transmitting information, the input circuit rests at a no-signal or "quiescent" dc voltage that is determined by the quiescent dc voltage of the signal source. We call this quiescent voltage the dc level of the input circuit. This input dc level might be ground level (zero volts), or it might be some positive or negative dc voltage.

The amplifier of Fig. 5-20 is intended to operate at an input dc level of zero volts. That is, when the signal source applies no varying signal to the grid of V_1, the signal source holds the grid of V_1 at a dc level of zero volts. But for normal operation as an amplifier V_1 requires a no-signal dc grid voltage that is somewhat negative with respect to the cathode. This required negative grid-to-cathode voltage is the normal grid-bias voltage of the tube. The required grid-bias voltage is usually of the order of a few volts. Since the grid operates at a specified dc level of zero volts, the only way we can provide the required negative grid-to-cathode bias voltage is to operate the cathode at a somewhat more positive dc potential than the grid dc level. If, for example V_1 requires a grid-to-cathode bias of -1.65 volts, we would operate the cathode at +1.65 volts.

In the amplifier of Fig. 5-20, the cathode potential is fixed by the voltage drop across the cathode resistor R_2. This voltage drop is caused by the normal cathode current in V_1. We choose R_2 so that the normal cathode-current voltage drop across R_2, as calculated by Ohm's law, places the quiescent cathode potential of V_1 at 1.65 volts. If the desired cathode current in V_1 is 5 milliamperes, we see that R_2 has to be 330 ohms as shown in Fig. 5-20.

We can figure the corresponding dc voltage drop in the V_1 plate-load resistor R_3. If R_3 is 5,600 ohms and if the plate current is 5 milliamperes, the voltage drop across R_3 must be 28 volts. Thus the plate of V_1 has a quiescent dc level of 100 - 28 = +72 volts. And since the plate of V_1 is directly connected to the grid of V_2, the dc level of that grid is also +72 volts as shown in Fig. 5-20.

Suppose we want the second tube V_2 to operate at approximately these quiescent (zero-signal) conditions:

Plate-to-cathode voltage	+250 volts
Grid-to-cathode bias	-2 volts
Screen-to-cathode voltage	+150 volts
Plate current	25 milliamperes
Screen current	6 milliamperes

You can check that the circuit of Fig. 5-20 provides operation at values that are very close to those we just listed. (Remember that the cathode current of V_2 is the sum of the plate current--25 milliamperes--plus the screen current--6 milliamperes.)

We note that the output dc level at the plate of V_2 is +330 volts. Thus, the amplifier shown is suitable for supplying signals to a dc-coupled circuit that has a rated input dc level of +330 volts.

Incidentally, signal currents in the cathode resistors R_2 and R_4 cause signal voltage drops across those resistors. These signal voltages across R_2 and R_4 have polarities such as to reduce the over-all grid-to-cathode signal voltages. This effect reduces the voltage gain of the amplifier of Fig. 5-20. This result is actually a form of negative-feedback operation. And although the negative feedback reduces the voltage gain, we shall nevertheless learn later that a certain amount of negative feedback might be desirable for other reasons. (As we have already noted, many oscilloscope amplifiers are actually push-pull amplifiers--although we are considering single-ended amplifiers for simplicity. In a push-pull amplifier we can avoid the form of negative feedback just mentioned if we wish. We do this by providing a circuit where all or part of the cathode resistance in a given push-pull stage is common to both tubes in the stage. As the signal current increases in the cathode circuit of one tube, the signal current decreases correspondingly in the opposite tube in the push-pull circuit. Then the total cathode current in the common cathode resistance remains essentially constant. Thus the negative-feedback voltage drop across the cathode resistance doesn't occur.)

5-12 Voltage dividers for setting dc levels. Suppose that a certain point in a circuit (call it point A) operates at a given dc level--say, +100 volts. And suppose we want to feed a signal from point A to some other point (point B) that operates at a different dc level--say, +50 volts. We can insert a voltage divider like that of Fig. 5-21 between points A and B--so that we can transmit signals from point A to point B while each point remains at its proper dc level. At the same time, we retain the operating characteristics of dc coupling.

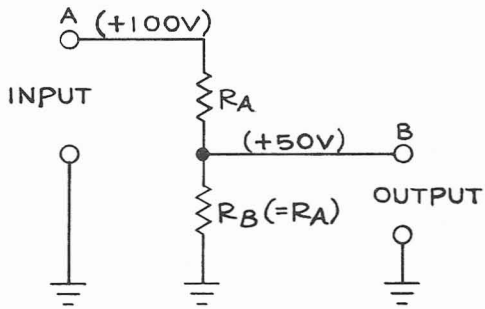

Fig. 5-21 Voltage divider for changing the dc level from +100 volts to +50 volts. Here we ground the lower end of the voltage divider. Besides changing the dc level, this divider reduces the varying - signal output amplitude by 50 percent.

In the example of Fig. 5-21 we want the voltage across R_B (50 volts) to be one-half the total voltage (100 volts) across the divider. Therefore we make R_B equal to one-half the total divider resistance. We note, however, that the output signal voltage at point B is therefore only one-half the input-signal voltage we apply to point A.

To reduce the signal-voltage loss we just mentioned, while still achieving the wanted change in dc level, we can use a circuit like that of Fig. 5-22. Here we connect the lower end of R_B to a -150-volt supply rather than to

ground. Thus we want the dc voltage across R_B to be 200 volts--instead of the 50 volts that we wanted across R_B in Fig. 5-21. That is, in Fig. 5-22, we want the voltage drop across R_B (200 volts) to be four-fifths of the total voltage across the divider (250 volts). Therefore, in Fig. 5-22, we make R_B equal to four-fifths of the total divider resistance. Thus the output-signal voltage at point B is also four-fifths of the input-signal voltage we apply to point A. We see that the signal-voltage loss in the arrangement of Fig. 5-22 is much less than that in the circuit of Fig. 21. We call an arrangement like Fig. 5-22 a long-tailed voltage divider.

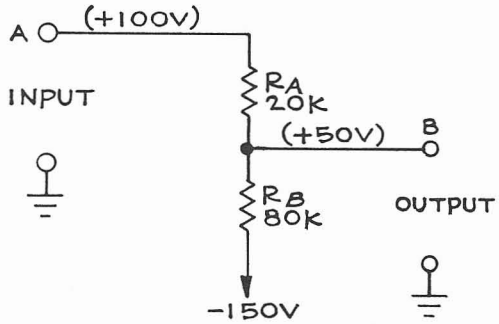

Fig. 5-22 Long-tailed voltage divider for changing the dc level from +100 volts to +50 volts. Here we connect the lower end of the divider to a -150-volt supply. This arrangement reduces the varying - signal output amplitude by only 20 percent.

There is always a certain amount of input capacitance associated with the circuit we drive with the signal from the divider. We show this unavoidable capacitance as C_{shunt} in Fig. 5-23. We can compensate for any waveform distortion caused by C_{shunt} in a manner like that used in amplifier-input compensated voltage dividers (Sec. 4-7. The compensating capacitor is shown as C in Fig. 5-23.

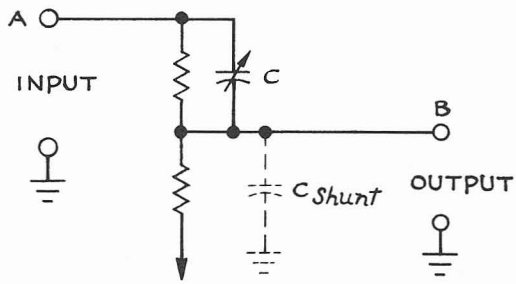

Fig. 5-23 When we use a voltage divider to change the dc level, the circuit we drive unavoidably presents some input capacitance C_{shunt}. To preserve the response characteristics of the system we can compensate the voltage divider by means of an adjustable capacitor C. We adjust C in the manner used in amplifier-input compensated voltage dividers (Sec. 4-7).

We can use voltage dividers to set dc levels at either the input or the output of an amplifier--or between one stage and the next in a multistage amplifier.

5-13 Permanence of gain and dc level. Suppose we want to use a tube of a certain type in a dc-coupled amplifier, and suppose we want the tube to operate with a no-signal cathode current of, say, 4.6 milliamperes. Let the solid-line graph of Fig. 5-24 illustrate the plate current-grid voltage characteristics of the tube for the plate voltage we use. Note that we need a negative grid-to-cathode bias voltage of 1.8 volts to allow the 4.6-milliampere current we want. The corresponding operating point is shown as point *A* in Fig. 5-24.

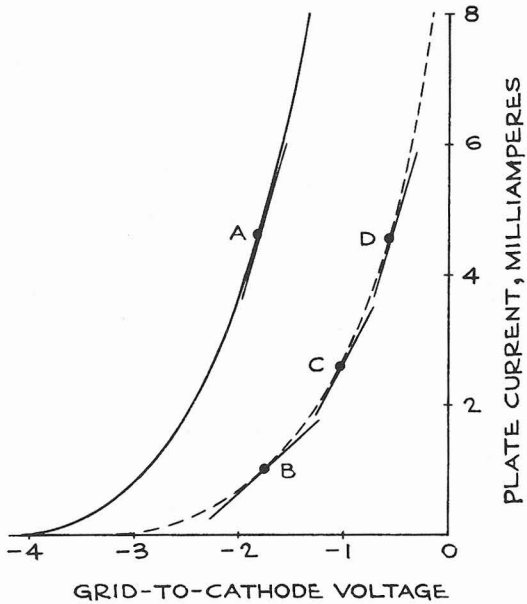

Fig. 5-24 The characteristics of a certain tube are represented by the solid-line curve. Operating point *A* corresponds to a plate current of 4.6 milliamperes and a bias of -1.8 volts. We can select operating point *A* by either (a) providing an external fixed-bias source of -1.8 volts (Fig. 5-25a), or (b) using a 390-ohm cathode-bias resistor to ground (Fig. 5-25b), or (c) using a 33,000-ohm cathode-bias resistor connected to a -150-volt supply (Fig. 5-25c). If the tube characteristics now change to those indicated by the broken-line curve, the fixed-bias method selects operating point *B*; the grounded cathode-resistor method selects operating point *C*; while the "long-tailing" method (large cathode resistance to -150 volts) selects operating point *D*. Thus, even though the tube characteristics might change, the long-tailing method (1) preserves the dc levels in the circuit by keeping the plate current at essentially its original value, and (2) maintains the mutual conductance g_m (and therefore the voltage gain) at nearly its original value. (The value of g_m at any operating point is indicated by the slope of a tangent line to the characteristic curve at that point).

Fig. 5-25 shows three ways we could get the 1.8-volt grid-to-cathode bias we appear to need. Fig. 5-25a shows an external bias-voltage source connected in series with the grid-return resistor R_g, to supply the bias voltage.

Fig. 5-25b shows a resistor R_k of 390 ohms connected between cathode and ground; that is, between cathode and the negative terminal of the dc power supply. Thus a cathode current of 4.6 milliamperes produces a voltage drop of 1.8 volts across R_k. And this voltage drop comprises the desired 1.8-volt negative grid-to-cathode bias voltage.

Fig. 5-25c shows a 33,000-ohm resistor R_k connected between cathode and a negative 150-volt power supply. A cathode current of 4.6 milliamperes causes a voltage drop of 151.8 volts across R_k, so that the cathode operates at a voltage of +1.8 volts. And here, too, the operating negative grid-to-cathode voltage has the desired value of 1.8 volts.

Actually, then, any one of the three circuits shown in Fig. 5-25 places the operating point at the desired point *A* of Fig. 5-24--if the tube has the characteristic curve shown by the solid-line graph of Fig. 5-24.

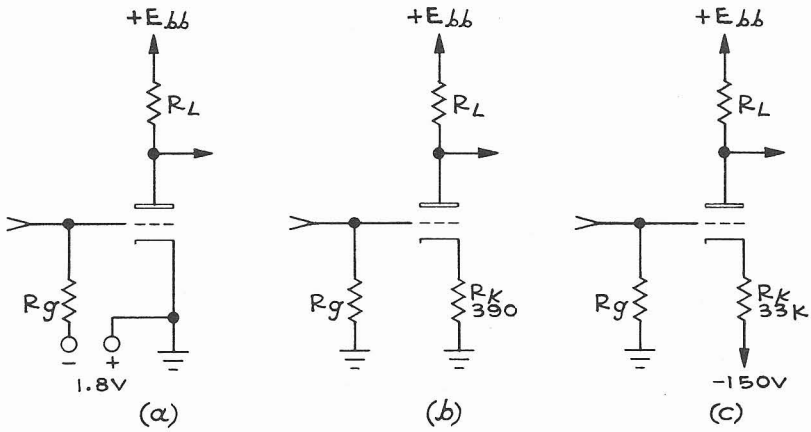

Fig. 5-25 Three methods of setting the operating point *A* as used in Fig. 5-24.

But the operating characteristics of the tube might vary from those indicated by the solid-line graph of Fig. 5-24. Reasons for such a variation might include: (1) aging of the tube; (2) variation in heater-supply voltage with a resulting change in cathode emission; or (3) tube replacement. Let us see how the three circuits of Fig. 5-25 compare with respect to keeping the amplifier characteristics as nearly constant as possible even though the tube characteristics might change.

Suppose, for example, that the tube characteristics change from those indicated by the solid-line graph of Fig. 5-24 to those indicated by the broken-line graph of Fig. 5-24. Such a change in characteristics might occur from one or more of the three causes we mentioned in the preceding paragraph.

If we use an external fixed-bias source (Fig. 5-25a), the grid-to-cathode bias voltage remains at -1.8 volts, even though the tube characteristics

change. And thus the operating point of the tube becomes point B of Fig. 5-24. Therefore the cathode current of the tube now becomes slightly less than 1 milliampere--instead of the 4.6 milliamperes we want. This current change causes two undesirable effects:

1. The reduced current causes a reduced voltage drop across the plate-load resistor R_L of Fig. 5-25a. Therefore the dc voltage level at the plate of the tube becomes appreciably more positive than it was originally. This dc-level change might disturb the operation of the circuit that the amplifier drives.

2. And the slope of the plate current-grid voltage curve is appreciably less at point B than it was at point A. The slopes of the curves at these two points are indicated by the slopes of the straight tangent lines drawn to the curves at these points. This slope, or steepness, at a given operating point actually indicates the mutual conductance g_m of the tube at that operating point--and thus the slope gives a rather good indication of the amount of voltage gain we can expect when the tube works a given operating point. Thus we see that the voltage gain of the amplifier stage operating at point B is appreciably smaller than the gain we get at point A.

Now suppose that we use the grid-biasing arrangement of Fig. 5-25b--a cathode-biasing system, rather than the external-bias connection of Fig. 5-25a. When the tube characteristics change from those of the solid-line graph to those of the broken-line graph of Fig. 5-24, the cathode current decreases. But the reduced cathode current produces a smaller bias-voltage drop across R_k--so that the cathode current actually remains closer to the value it had before the tube characteristics changed. In fact, the new operating point is point C of Fig. 5-24, as you can check. Note that the cathode current at operating point C is 2.6 milliamperes--appreciably closer to its original value of 4.6 milliamperes than it was at point B. Thus, if the tube characteristics change, the resulting dc-level change at the tube plate is smaller with the circuit of Fig. 5-25b than with the circuit of Fig. 5-25a.

Furthermore, the slope of the tangent line to the curve at point C is nearly equal to the original slope at point A. Correspondingly the voltage gain of the stage now remains closer to the gain that existed before the tube characteristics changed.

But if we use the grid-biasing arrangement of Fig. 5-25c, we note a further improvement in the stability of the amplifier with respect to the dc level and with respect to gain. In Fig. 5-25c we use a large cathode resistor (33,000 ohms). Therefore even a smalll cathode-current change causes an appreciable change in voltage drop across R_k. Thus if the tube characteristics change from the solid-line graph to the broken-line graph, the voltage drop across R_k changes from 151.8 volts to about 150.5 volts. The negative grid-to-cathode bias voltage accordingly changes from 1.8 volts to about 0.5 volt. And the new operating point is point D of Fig. 5-24. At the latter point, we see that the cathode current is back almost at its original value of 4.6 milliamperes. Therefore the plate dc voltage level

is almost exactly what it was before the tube characteristics changed. Similarly, the slope of the tangent line at point D is almost exactly what it was at point A--so that the voltage gain of the stage is close to the value it had before the tube characteristics changed.

We see, then, that the plate-output dc voltage level and the voltage gain remain more nearly constant if, instead of the fixed-bias circuit of Fig. 5-25a, we use a cathode-resistor biasing arrangement like Fig. 5-25b or Fig. 5-25c. The dc level and the voltage gain are particularly stable when we use a large cathode resistor connected to a relatively negative supply voltage as in Fig. 5-25c. We call the arrangement of Fig. 5-25c a long-tailed stage. Briefly, the long-tailed stage owes its dc-level and voltage-gain permanence to these facts: (1) The negative grid-to-cathode voltage that largely controls the plate current consists of the voltage drop across the large cathode resistance R_k. (2) Any plate-current change produces a relatively large change in the voltage drop across the cathode resistor R_k. And (3) this cathode-resistor voltage drop changes in a direction that tends to restore the plate current to its original value. (If the stage is single-ended instead of push-pull, then this result reduces the voltage gain by negative-feedback action--compare Sec. 5-11). The marked dc-level and gain permanence of the long-tailed stage is important in oscilloscopes and other instruments.

Furthermore, in the long-tailed amplifier (Fig. 5-25c), the plate current remains relatively constant even when we change the plate power-supply voltage E_{bb}. For example, any plate-voltage rise tends to increase the plate current (and the corresponding cathode current). The resulting cathode-current rise increases the voltage drop across R_k. And this voltage increase across R_k increases the negative grid-to-cathode voltage--thus tending to reduce the plate current. In this way, the long-tailed arrangement of Fig. 5-25c keeps the plate current at nearly its original value even if we change the plate-supply voltage E_{bb} moderately. That is, V_1 in Fig. 5-25c operates somewhat as if this tube had a large dynamic plate resistance r_p.

For certain applications we might use the cathode-to-plate circuit of a second tube V_2 as the cathode resistor in a long-tailed stage, as shown in Fig. 5-26a. In V_2, the dynamic plate resistance (to a varying current) can be large, even though V_2 conducts appreciable dc plate current that also flows in V_1. As an example, suppose V_1 and V_2 conduct an average (dc) plate current of 10 milliamperes. And suppose that the V_2 dynamic plate resistance r_p is 50,000 ohms. (That is, a moderate current change meets the same opposition in the V_2 cathode-to-plate circuit that this current change might meet in a 50,000-ohm resistor.) Now any moderate plate-current change in V_1 meets an opposition like that in a long-tailed amplifier where the cathode resistor is 50,000 ohms. But, by Ohm's law, an actual 50,000 ohm resistor carrying 10 milliamperes causes a 500-volt drop. Thus, by using V_2 in Fig. 5-26a, we achieve a stability in V_1 gain and dc level that otherwise requires a 50,000-ohm cathode resistor connected to a -500-volt supply--and dissipating 5 watts. (To make the V_1 plate current, voltage gain, and dc level even more stable we can long-tail the V_2 circuit itself as in Fig. 5-26b. In some cases we even replace R_k in Fig. 5-26b with a third tube V_3 as shown in Fig. 5-26c. In this way

we can make V_1 as stable as if we replaced V_2 and V_3 with a cathode resistor of several megohms connected to a negative supply voltage of several kilovolts.)

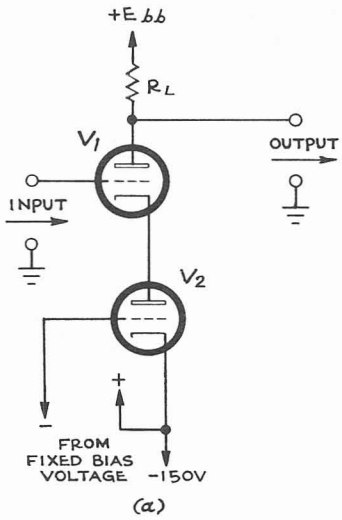

(a) V_2 serves as the cathode resistor in a long-tailed circuit. The dynamic plate resistance r_p of V_2 can be high so as to provide effective long-tailing action for signal variations. At the same time, the V_2 dc plate resistance can be small--eliminating the need for a very-high-voltage negative supply as described in the text.

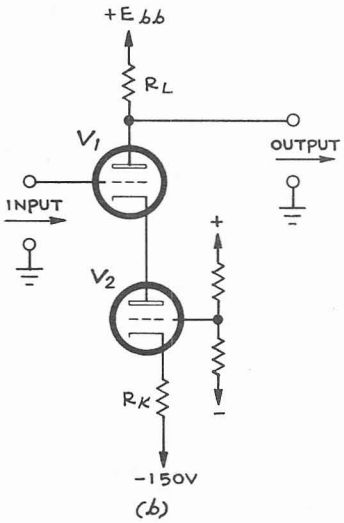

(b) As described in the text, we can further improve the long-tailing effect in stabilizing V_1 gain and output dc level if we long-tail V_2 as well.

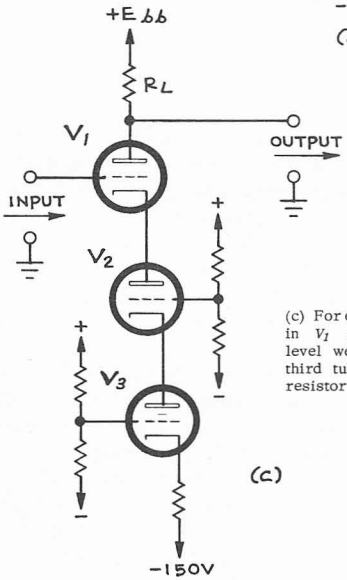

(c) For extreme permanence in V_1 gain and output dc level we sometimes use a third tube V_3 as a cathode resistor for V_2.

Fig. 5-26

5-14 Grounded-grid amplifiers. Thus far we have considered cases where we fed the input signal to the grid of a plate-loaded amplifier. But it is also possible to apply the input signal to the cathode of the amplifier, meanwhile holding the grid at some fixed voltage. Such an arrangement is shown in Fig. 5-27. An amplifier operated in this manner is called

a grounded-grid amplifier (even though the actual fixed grid voltage might not actually be zero or ground potential). Normally, we set the no-signal cathode voltage somewhat more positive than the fixed grid voltage. In this way we maintain the required negative grid-to-cathode bias voltage.

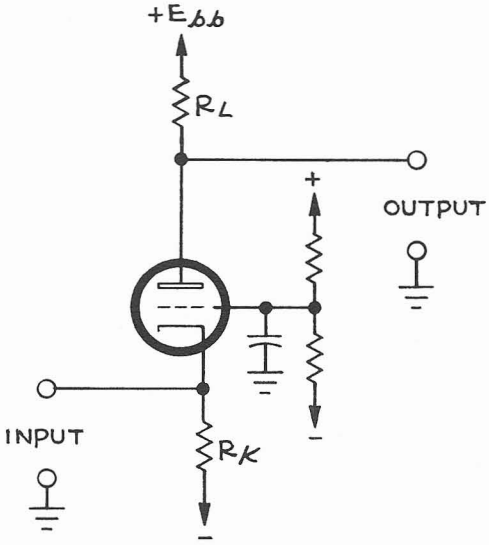

Fig. 5-27 Grounded-grid amplifier. We apply the input signal to the cathode instead of the grid. We maintain the grid at some fixed dc voltage (perhaps ground, perhaps some other voltage). The input impedance is low. The output signal-voltage polarity is the same as the input signal - voltage polarity.

If, for example, we apply a positive-going input signal voltage to the cathode, the effect is the same as if we made the instantaneous grid-to-cathode voltage more negative. Therefore the plate current of the tube decreases. As a result, voltage drop across the plate-load resistor decreases. Consequently the instantaneous plate voltage rises. We see, then, that the polarity of the output-signal voltage from the grounded-grid amplifier is the same as that of the input-signal voltage. This result is opposite to that for the case where we apply the input signal to the grid of the tube.

The grounded-grid-amplifier input-circuit impedance consists of the cathode resistor R_k, in parallel with the dynamic impedance of the tube at its cathode terminal. Since this input impedance is ordinarily quite low, the grounded-grid amplifier appreciably loads the signal source. Therefore the grounded-grid amplifier, used alone, proves unsuitable for many circuits in oscilloscopes. But, as we shall see later, we can often use the grounded-grid amplifier to advantage if we combine the grounded-grid amplifier with other circuits. Furthermore, grounded-grid amplifiers in some applications have advantages with respect to noise and other operating characteristics.

5-15 Cascode amplifier. Let us consider an interesting circuit called the cascode amplifier (Fig. 5-28). Here the cathode-to-plate circuits of two tubes operate in series. We apply the input signal to the grid of V_1. As a result, plate-current signal variations take place in V_1 and V_2. We take the output-signal voltage from the plate of V_2.

To analyze the circuit of Fig. 5-28, refer to Fig. 5-29. In Fig. 5-29, we apply a fixed grid-to-cathode bias voltage E_{c1} to V_1, and we apply a higher fixed voltage E_{c2} to the grid of V_2. Suppose we set the V_2 plate-voltage control R for zero volts. Thus no plate current flows in V_2 (region A in Fig. 5-30). But electrons flow from the cathode of V_1 to the plate of V_1, thence from the cathode of V_2 to the grid of V_2 and to the positive-voltage supply that sets the V_2 grid voltage E_{c2}. Region A in Fig. 5-30 shows the corresponding V_2 grid current.

If we now gradually slide the movable arm of R toward the right we raise the plate-supply voltage E_{b2}. At some point during this plate-voltage rise, plate current begins to flow in V_2, increasing the dc cathode-to-plate voltage drop across V_1. Thus the voltage at the cathode of V_2 rises--or, what is the same thing, an increasingly negative bias voltage develops rapidly between the grid and the cathode of V_2. Therefore the grid current in V_2 drops (region B in Fig. 5-30). As the increasing plate-supply voltage E_{b2} raises the plate current, V_2 behaves more and more in one sense like the long-tailed stage described in Fig. 5-26a. Thus the plate current in V_2 depends less and less upon the value of E_{b2} so that the graph of V_2 plate current versus E_{b2} flattens out (region C in Fig. 5-30).

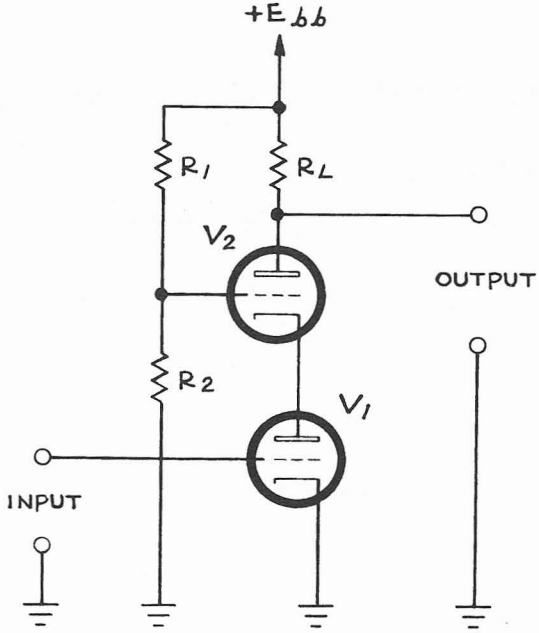

Fig. 5-28 Basic cascode amplifier.

This flattened plate-characteristic curve corresponds to a very high dynamic plate resistance r_p, much like that of a pentode (region D in Fig. 5-31). Thus the cascode-amplifier characteristics resemble the characterstics of a pentode amplifier--although we don't have to provide a screen-current supply.

Furthermore, we can design cascode amplifiers so that they add only a small amount of noise to the signals they amplify--in contrast to the larger amounts of noise added by some other arrangements.

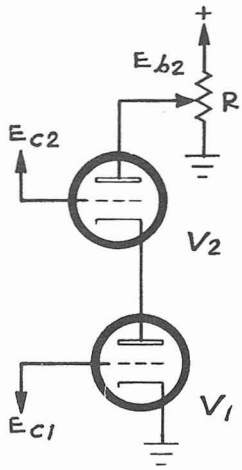

Fig. 5-29 Circuit used in the text for describing the cascode-amplifier characteristics (see Fig. 5-30).

5-16 Amplifier limitations. To get the best use from pulse amplifiers in our oscilloscopes and other equipment, we ought to have some understanding of the limitations of such amplifiers. Some of the items we shall mention are design limitations. Other items are application problems. If you find that some of the things we shall mention are causing problems for you, your Tektronix Field Engineer or Engineering Representative will be glad to try to suggest solutions.

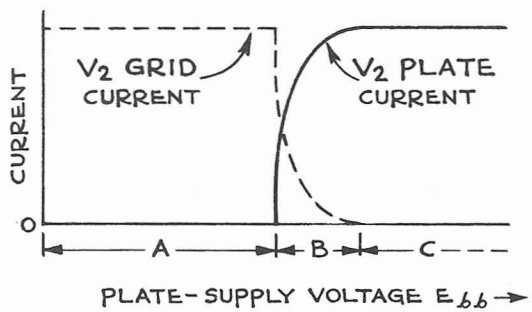

Fig. 5-30 At low V_2 plate voltages (Fig. 5-29), V_1 plate current flows in the V_2 cathode-to-grid circuit (region *A* here). At higher V_2 plate voltages, V_2 plate current starts. The resulting voltage-drop increase across V_1 makes the V_2 cathode more positive--reducing V_2 grid current (region *B* here). Now V_2 of Fig. 5-29 operates like a long-tailed stage (Fig. 5-26a), so that V_2 plate-voltage changes fail to affect the plate current very much (region *C* here).

1. Recovery time. Sometimes we'd like to use an oscilloscope to look at a pulse that occurs shortly after a preceding pulse. We can get into unforeseen difficulties in some cases, particularly if the pulse we want to see is

a small one and if the preceding pulse is very large. Our problems arise because amplifiers need a small amount of time to "recover" from the effects of one pulse before they can respond faithfully to a succeeding pulse. We should ask ourselves: Are we sure the pulse we are looking at is simply the one we want to see--or does the display also include some dying response to a previous pulse? An amplifier that is ac coupled, or that includes cathode- or screen-bypass capacitors, has a definite "recovery time constant" that must elapse before lower-frequency components of a large pulse die out.

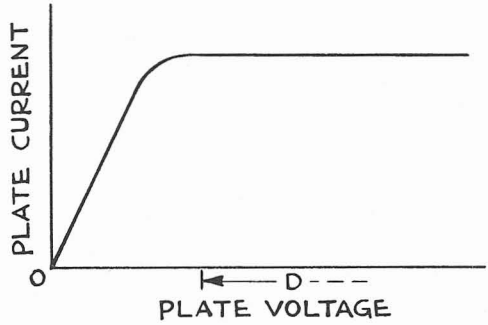

Fig. 5-31 Plate current-plate voltage characteristics of a typical pentode, shown for comparison with the characteristics of a cascode stage (Fig. 5-30, solid line). Note that in region *D* here, changes in the pentode plate voltage don't affect the plate current very much (high plate resistance r_p). Similarly for the cascode stage (region *C* of Fig. 5-29). But, although the cascode stages requires a second tube, it can use only triodes if we wish--eliminating the screen-current requirement.

2. Ringing. Suppose that an amplifier has an amount of ringing that is entirely unobservable and unobjectionable under ordinary circumstances. If we drive the amplifier with a very large pulse, we might nevertheless induce a ringing (very small in percentage, but actually noticeable in amplitude) that persists into the time interval occupied by a succeding pulse we're trying to observe. The effect is worsened if the pulse we want to see is small--because we turn up the gain of the system so that the small pulse is suitably amplified. The high resulting system gain then also results in our amplifying the ordinarily unobservable ringing following a previous large pulse.

3. Pulse on a pulse. A problem somewhat related to the preceding one can appear when we try to look at a small pulse (say, of 1 volt amplitude) that rides on the top of a large pulse--say, of 100 volts amplitude. Recovery-time disturbances and transient ringing that ordinarily would be unnoticeable can cause us to think that the observed pulses are distorted.

4. Compression. The characteristic curve of a tube is actually a curve. That is, the characteristic of every tube has at least a very small amount of curvature, regardless of where we place the tube operating point on the curve. Under some conditions, the tube-characteristic graph might be sufficiently curved to introduce noticeable waveform distortion. The

amount of curvature (and therefore the amount of distortion) depends upon the operating point at which the tube works.

In the case of a deflection amplifier in an oscilloscope, one of the things that establishes the operating point is the amount of positioning voltage that we apply, by means of a positioning control, to locate the display suitably on the cathode-ray-tube screen.

Thus, distortion ordinarily takes the form of compression, in which the amount of deflection caused by a given waveform voltage varies when we change the position of the display on the cathode-ray-tube screen. Under ordinary circumstances we can limit compression to a negligible amount by selecting suitable tubes for use in deflection amplifiers.

On the other hand, suppose we attempt to use a dc-coupled deflection amplifier to display a small varying signal that rides on top of a large dc voltage. To display this small signal varying voltage satisfactorily, we might have to increase the display amplitude by turning up the gain in the deflection system. But then large dc voltage that accompanies the signal is also greatly amplified. This large dc voltage from the signal circuit tends to deflect the trace far off the cathode-ray-tube screen--so that we have to apply considerable positioning voltage by means of the positioning control to return the trace to the screen. Therefore, tubes on both sides of the push-pull deflection amplifier operate with large dc grid voltages, so that they actually work at unfavorable operating points on their characteristic curves. Under such conditions, the resulting amplifier compression might become so severe that the desired signal is hardly displayed at all.

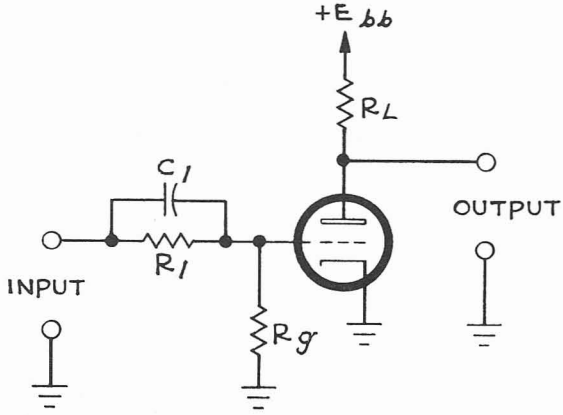

Fig. 5-32 Means of preventing excessive grid current that might otherwise flow if we inadvertently applied an excessive positive dc voltage to the input of a dc-coupled amplifier. Any dc grid current causes a voltage drop across R_1, thereby reducing the voltage that actually reaches the grid. In normal operation R_1 might cause an unwanted voltage drop when a varying signal voltage charges the unavoidable small capacitance of the grid. To prevent this unwanted effect, C_1 bypasses R_1.

5. Grid current. A full treatment of grid-current problems is something we won't attempt in this book. But a particular case is one where we might accidentally apply a large positive voltage to the input of an oscilloscope

whose vertical amplifier is dc coupled. Under these conditions, an excessive grid current can flow in the amplifier input tube. Figure 5-32 shows a way of limiting the grid current under these circumstances. Any grid current causes a voltage drop across R_1. This voltage drop reduces the voltage that appears at the grid terminal. And, at the reduced grid voltage, the grid current is smaller than as if R_1 had not been inserted in the circuit.

For rapidly changing input waveforms, the normal signal current in the grid-input capacitance causes a voltage drop across R_1. This signal-voltage drop across R_1 reduces the signal voltage applied to the grid--and the response of the stage to a rapidly changing signal is reduced. To avoid this loss of response to rapidly changing signals, we connect C_1 across R_1. We make the capacitance of C_1 large enough to represent essentially a short circuit to rapidly changing signals.

6. Cathode-interface impedance. In an indirectly heated cathode, the electron-emitting material is coated on an inner metallic sleeve or tube. This metal sleeve is wired to the external cathode pin on the tube. Sometimes an internal impedance appears at the junction or "interface" where the electron-emitting material joins the sleeve. We call this unwanted impedance a cathode-interface impedance. Electrically, this interface impedance resembles an *RC* combination (or sometimes a complicated resistive-capacitive network) connected in series with the cathode load inside the tube.

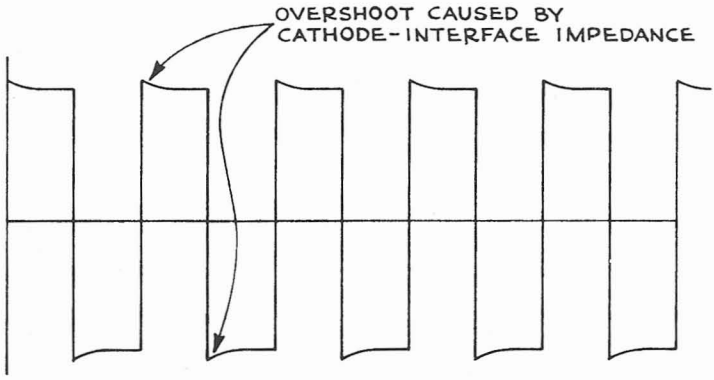

SWEEP TIME/DIV. SETTING = 2 μSEC.
SQUARE-WAVE REPETITION RATE = 250 K.C.

Fig. 5-33 Typical overshoot in displayed square wave that results when vertical-amplifier tubes have unwanted cathode-interface impedance.

Cathode-interface impedance can distort the pulse response of a circuit. For example, suppose we apply a square wave to the vertical input of an oscilloscope where cathode-interface impedance exists in the vertical-amplifier tubes. The displayed waveform might then show overshoot (Fig. 5-33). The amount and duration of this overshoot depends upon the nature of the interface impedance in the individual tubes. The remedy is to identify and replace the offending tubes.

The severity of the cathode-interface-impedance problem varies with the tube type, and also varies from one tube manufacturer to another. The severity of this problem also varies from one individual tube to another. Furthermore, this problem often grows as the tubes age in service.*

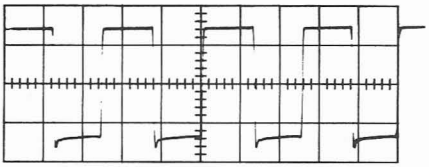

Fig. 5-34 Distortion in the output waveform from the Type 105 Square-Wave Generator resulting from cathode-interface impedance when the output tubes in the generator are old. Square-wave repetition rate, 1 mc.; sweep TIME/DIV., 0.4 μSEC/DIV.

7. Dc shift. To achieve the amplifier performance that we sometimes need, we use high-plate-current pentodes in certain amplifier stages. Sometimes these tubes display a defect that we call dc shift.

Suppose that, at some instant A, we apply a positive-going voltage step to the input grid of the tube (Fig. 5-35a). As a result, the plate current rises abruptly. But a tube afflicted with dc shift cannot quite maintain the

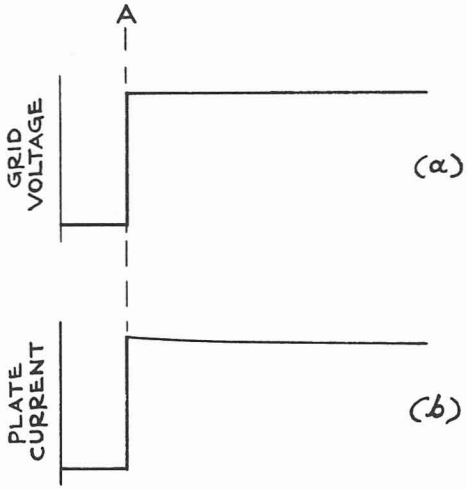

Fig. 5-35 (a) An input voltage step that we can apply to check for the presence of dc shift in an amplifier tube.

(b) Plate-current variations that occur when the amplifier tube has unwanted dc shift. At instant *A*, the positive-going input voltage at the grid raises the plate current to a new high value. But during the following interval of several seconds, the plate current gradually falls off.

*As an individual example, if the output tubes in the Tektronix Type 105 Square-Wave Generator have been used for a long time, then these tubes can develop cathode-interface impedance. In this generator, the result is a jagged appearance along the early part of the lower or negative portion of the output waveform (Fig. 5-34). If you use only the rising edge and the flat top of the square wave in your tests and measurements, you can neglect this waveform distortion. But if you need to observe the trailing edge and the flat bottom of the waveform, you should replace the output tubes.

new larger value of plate current; instead, the plate current "droops" a few percent during an interval of several seconds following the step input (Fig. 5-35b).*

Here's one way to check an oscilloscope vertical amplifier for dc shift. First, free-run the time-base system (turn the STABILITY control full right). Set the TIME/DIV (or TIME/CM) control for a moderate sweep rate such as 1 millisecond per division. Position the resulting horizontal trace near the bottom graticule line. Set the vertical-input AC-DC switch to DC. Suddenly apply to the vertical-input connector a battery voltage (for example, from the test leads of an ohmmeter) sufficient to move the trace to a new position near the top graticule line. At the same time and for at least 5 or 10 seconds afterward, observe carefully whether the trace falls slightly on the graticule. Remove the battery connection. Repeat the check a few times.

To reduce or eliminate dc shift, we can (a) try various individual tubes, or (b) adjust the DC SHIFT COMP. control that is included in some oscilloscopes. (The DC SHIFT COMP. control is part of a long-time-constant *RC* circuit that introduces a drift opposite to the drift caused by the dc shift in the tubes. Figure 5-36 shows one form of such a circuit.)

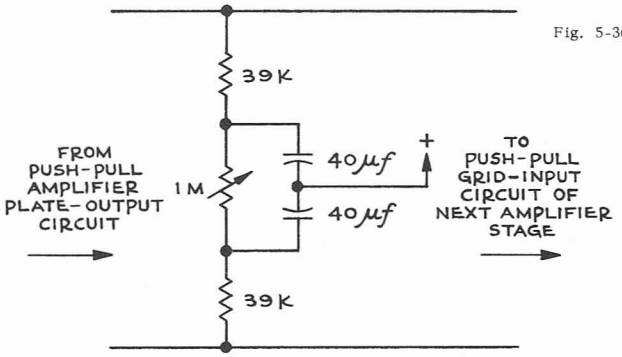

Fig. 5-36 A simple form of dc-shift compensating circuit included in some oscilloscopes. This circuit introduces an adjustable long *RC* time constant that produces an output-signal drift opposite to the drift caused by dc shift in the tubes.

*Tube sources don't agree on the cause. Possible dc-shift explanations that have been advanced are (a) some defect whereby the cathode emitting material can't maintain the new higher required emission, (b) accumulation of an electron cloud in some region between the tube elements, and (c) a change in screen-grid geometry with temperature (the screen current rises along with the plate current). Perhaps the fault actually involves some combination of these and possibly other causes.

Chapter 6

CATHODE FOLLOWERS

The cathode follower is a circuit related to the familiar plate-loaded amplifier. In the plate-loaded amplifier the load resistance R_L is connected in the plate lead to the tube. But in the cathode follower, shown in Fig. 6-1, the load resistance R_k is connected in the cathode lead to the tube. Useful characteristics of the cathode follower include these:

1. The grid-input capacitance is small.

2. And the internal output impedance is small.

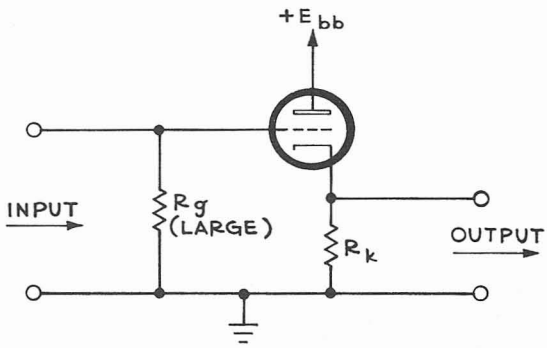

Fig. 6-1 Basic cathode-follower circuit. Here the load resistor R_k is connected in the cathode circuit, rather than in the plate circuit as in the plate-loaded amplifier.

In this chapter we shall take up these and other cathode-follower characteristics in more detail. But first, let's consider some cases where we can take advantage of the two characteristics we have mentioned above.

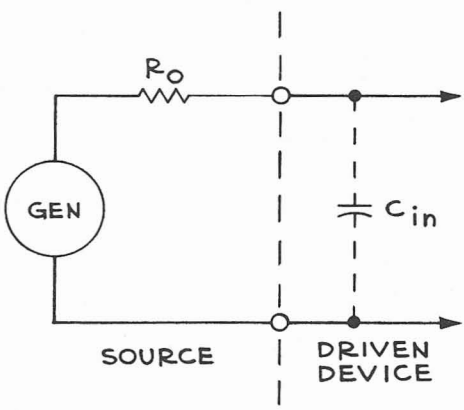

Fig. 6-2 Here a signal source has an internal impedance R_o. The source drives a circuit whose input capacitance is C_{in}. If the time constant $R_o C_{in}$ of this arrangement is small, then the risetime of the combination is short. One way to keep the time constant small is to make C_{in} very small. Then the risetime is short even if R_o is relatively large.

6-1 Need for a device having a small input capacitance. Suppose we apply an input signal to a device whose input capacitance is C_{in}. And suppose that the source of the signal voltage has an internal output impedance

(resistance) R_o (see Fig. 6-2). For simplicity, assume that C_{in} and R_o are the only impedances present in the source or in the circuit connected to the source. Then the time constant of the source-and-input circuit will be $R_o C_{in}$ (Sec. 2-5 to 2-8).

If we can keep the input capacitance C_{in} very small, then the time constant $R_o C_{in}$ will be small--even though R_o might be quite large. And consequently the risetime (Sec. 2-9) of the $R_o C_{in}$ circuit will be short.

The input capacitance C_{in} of a cathode follower is small, for reasons that will be explained later. Consequently the cathode follower has the advantage that we can connect the cathode-follower input circuit to a signal source without greatly lengthening the risetime of the source itself.

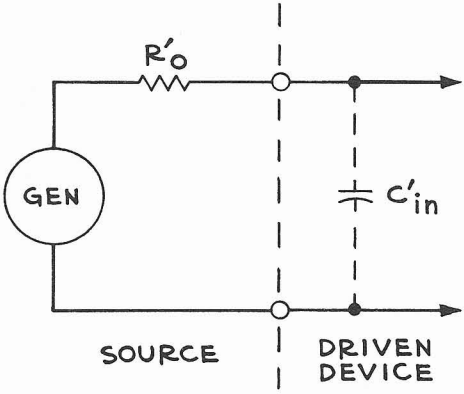

Fig. 6-3 Here a second signal source whose internal impedance is R'_o drives a circuit whose input capacitance is C'_{in}. One way to keep the time constant $R'_o C'_{in}$ short is to make R'_o very small. Then the risetime is short even if C'_{in} is relatively large.

6-2 Need for a device having a small internal output impedance. Suppose a signal source has an output impedance (resistance) R'_o that is very small. Imagine that we use this signal source to apply a signal voltage to another device whose input capacitance is C'_{in} (see Fig. 6-3). For simplicity, assume that C'_{in} and R'_o are the only impedances present in the source or in the circuit connected to the source. Then the time constant of the source-and-input circuit will be $R'_o C'_{in}$.

If we can keep the source impedance R'_o very small, then the time constant $R'_o C'_{in}$ will be small--even though C'_{in} might be quite large. And consequently the risetime of the $R'_o C'_{in}$ circuit will be short.

The internal output impedance of a cathode follower is small, for reasons that will be explained later. Consequently the cathode follower has the advantage that we can use the cathode follower to drive a device that has appreciable input capacitance while still achieving a short risetime. As an example, we might use a cathode follower to drive a coaxial transmission line--where the capacitive effect of the line is appreciable--and still preserve a short-risetime characteristic.

Figure 6-4 shows an application that utilizes the advantages of both the small input capacitance and the small output impedance of the cathode follower. We desire to couple a rapidly changing signal from the plate of V_1 to the grid of V_3. In Fig. 6-4, we apply the output signal from the plate of V_1 to the grid of the cathode follower V_2. The internal source impedance of the amplifier stage that includes V_1 is ordinarily rather large (Sec. 5-2).

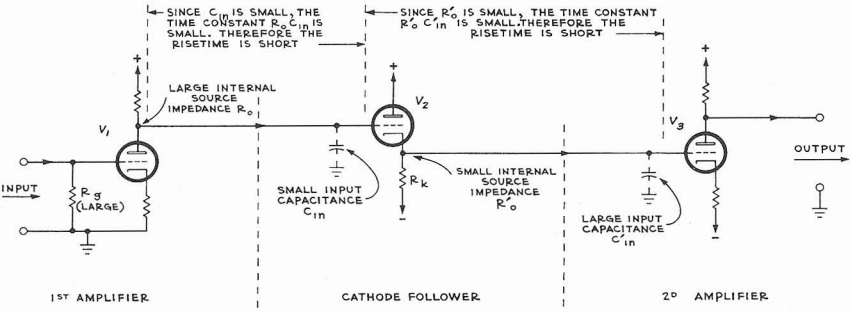

Fig. 6-4 Here we want to apply a signal from the plate circuit of V_1 (representing a relatively large impedance R_o) to the grid circuit of V_3 (representing a relatively large capacitance C'_{in}). If we couple the plate of V_1 directly to the grid of V_3, the corresponding coupling-circuit time constant is a large value $R_o C'_{in}$. But if we insert the cathode follower V_2 as shown, we now have two coupling-circuit time constants in cascade. The first time constant is $R_o C_{in}$, where C_{in} is the very small input capacitance to the cathode-follower; thus, as indicated in Fig. 6-2, this first time constant is relatively small. The second time constant is $R'_o C'_{in}$, where R'_o is the very small output impedance of the cathode follower; thus, as indicated in Fig. 6-3, this second time constant is relatively small. By inserting the cathode follower we thus break up a large time constant $R_o C'_{in}$ into two much smaller time constants $R_o C_{in}$ and $R'_o C'_{in}$. In this way we use the cathode follower to improve the coupling-circuit risetime.

But the input capacitance of the cathode follower V_2 is small, so that we end up with only a short risetime T_{R1} associated with the circuit that couples the plate of V_1 to the grid of V_2. Now, the input capacitance of the amplifier stage that includes V_3 is ordinarily rather large. But we drive the grid of V_3 from the low-impedance output circuit of the cathode follower V_2. Thus we end up with only a short risetime T_{R2} associated with the circuit that couples the output of V_2 to the grid of V_3. The effective risetime of the cathode-follower coupling system between V_1 and V_3 will, by Eq. 2-6, be shorter than the sum of the two individual risetimes T_{R1} and T_{R2}.

We see, then, that we can often shorten the risetime of an interstage-coupling system by inserting a cathode follower between one stage and the next.

6-3 Polarity of output signal from a cathode follower. Let us now consider some factors that tell us how a cathode follower actually operates.

If we apply to the cathode-follower circuit of Fig. 6-5 a grid-input signal that makes the grid more positive, the cathode-to-plate electron flow will

increase. Therefore the voltage drop across the cathode resistor R_k will increase, so that the voltage at the cathode of the tube will be farther removed from the potential of the grounded negative terminal of the power supply. That is, the voltage at the cathode output terminal of the cathode-follower stage will become more positive. Thus, in contrast to the action in the plate-loaded amplifier, the polarity of the output signal from the cathode follower is the same as the polarity of the input signal.

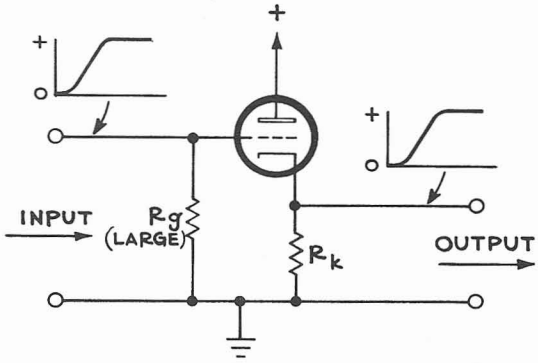

Fig. 6-5 Illustrating that the polarity of the cathode-follower output-signal voltage is the same as that of the input-signal voltage--in contrast to the polarity reversal that occurs in the plate-loaded amplifier.

6-4 Output impedance. The internal output impedance of a cathode-follower stage is comparatively small (usually from less than 100 ohms to perhaps 200 or 300 ohms). This range of values represents impedances that are considerably smaller than the typical output impedances we would expect from plate-loaded amplifiers (from a few hundred to several thousand ohms).

To see why the internal output impedance of a cathode follower is small, suppose we connect an external load resistor R across the output terminals of the cathode follower as shown in Fig. 6-6. Let the input grid-to-ground voltage be held constant. When we connect the external load resistor R, we effectively reduce the resistance in the cathode circuit. Suppose first that cathode current remains constant. Then the voltage drop across the cathode resistance decreases. Therefore the grid-to-cathode voltage becomes less negative. But this actually allows more cathode current to flow. Thus the voltage drop across the paralleled cathode resistor and external load resistor tends to increase again to almost its original value. In effect, then, the voltage across the output terminals doesn't depend greatly upon the amount of external load resistance we connect to these terminals. In accordance with Sec. 1-2, this statement is equivalent to saying that a cathode follower is a source that has a small internal impedance.

The actual internal source impedance of a cathode-follower stage is not simply the value of the cathode resistor R_k. Instead, it consists of a parallel combination of R_k shunted by the internal impedance of the tube. We can see that this statement applies if we look at Fig. 6-7. Note that the power supply represents a short circuit to signal variations. Thus the signal output impedance of the cathode-follower stage, looking back into the output

terminals, is made up of the tube impedance in parallel with the cathode resistor R_k.

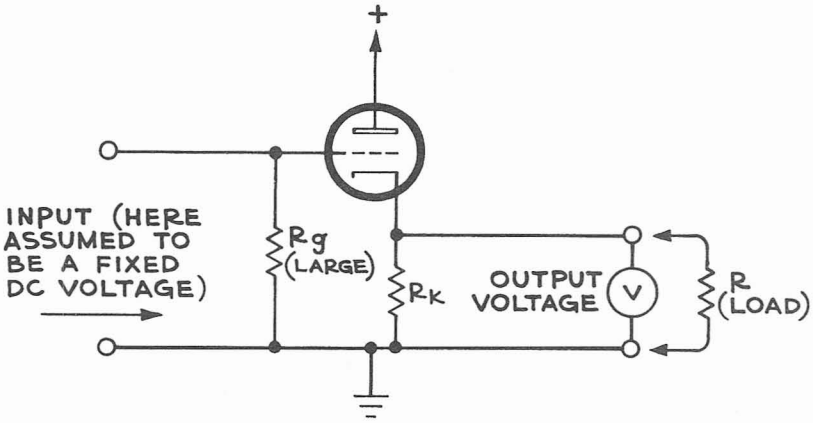

Fig. 6-6 Illustrating that the internal output impedance of a cathode follower is small. A given cathode current makes the voltmeter V show a certain dc output voltage (the IR voltage drop across R_k). If we connect the external load R, we thereby reduce the total resistance in the cathode output circuit. Thus we might at first expect the voltmeter to show a sharply reduced output-circuit IR voltage drop. But this voltage drop is also the negative dc grid-to-cathode bias voltage--so that the tube allows a greater cathode current to flow. Therefore the new output voltage is the IR voltage drop produced by a larger current in a smaller total resistance. As a result, this new output voltage isn't much less than the original voltmeter reading. The fact that the output voltage changes only a little when we connect the load R shows that the internal source impedance of the cathode follower is small.

The impedance of the tube itself, at its cathode terminal, can be shown to be approximately $1/g_m$ (where g_m is the mutual conductance of the tube in mhos). But the value of g_m of a given tube depends upon the operating point at which the tube works. Suppose, for example, that we use a tube whose plate current-grid voltage characteristic is that shown in Fig. 6-8. For this particular tube, the operating point is that shown as point A in Fig. 6-8 when the tube is used as indicated in Fig. 6-7. The slope of the tangent line to the characteristic curve at the operating point A shows that g_m is 12,500 micromhos (= 0.0125 mho). Then the impedance of the tube, at its cathode terminal, is approximately 1/0.0125 = 80 ohms. Since the cathode resistor is also 80 ohms, the effective internal output impedance of the cathode-follower stage of Fig. 6-7 is about 40 ohms.

6-5 Voltage gain. You will recall that in a plate-coupled amplifier stage, the varying output signal voltage may well be several times the varying input signal voltage. That is, a plate-coupled amplifier stage may have a voltage gain of several times. But the voltage gain of the cathode follower cannot be as great as unity. In other words, the varying output signal voltage cannot be as great as the varying input signal voltage. This result springs

from the fact that the cathode electron flow for a given plate voltage is controlled essentially by the grid-to-cathode voltage. Suppose, for example, that an input grid-to-ground signal-voltage change of +2 volts could change the electron flow sufficiently to vary the cathode-to-ground voltage by +2 volts (corresponding to a voltage gain of unity). But this change would involve no net change in grid-to-cathode voltage; therefore there would be no net change in electron flow--an absurdity. Thus the voltage gain of the cathode follower cannot be as great as unity.

Clearly, then, the cathode follower is not useful directly in providing voltage gain. But as we have seen, the cathode follower can be very useful in improving the risetime characteristics of circuits that actually do produce voltage gain.

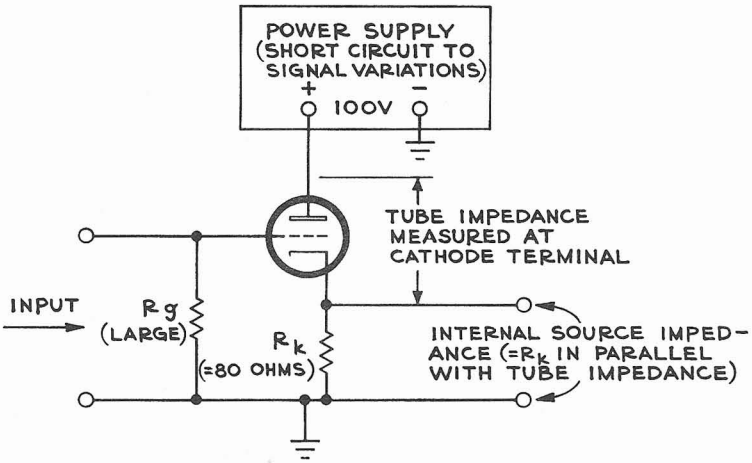

Fig. 6-7 The internal source impedance of a cathode-follower stage includes the cathode resistor R_k. But for a varying signal, the cathode-to-plate dynamic impedance of the tube is connected (through the power supply) in parallel with R_k. This tube impedance is roughly $1/g_m$, and is therefore often quite low. For example, if the tube has the characteristic curve of Fig. 6-8, its cathode-to-plate impedance is about 80 ohms. With such a tube, the cathode-follower stage of Fig. 6-7 would have an internal source impedance of only about 40 ohms.

The voltage gain of a cathode-follower stage depends both upon the characteristics of the tube and upon the value of the cathode resistor R_k. When R_k is equal to the internal output impedance of the tube itself (approximately $1/g_m$, where g_m is in mhos), the gain of the stage is approximately one-half. Thus, with values shown in Fig. 6-7, we realize an output of about one-half volt for each volt of input grid-to-ground signal. If we use greater values of R_k, we can make the gain of the stage appreciably greater. We can make the voltage gain reach values between 0.9 and 0.99 by using large values of R_k.

Since the output signal from a cathode follower has the same polarity as the input signal, and since the output signal can be made almost as large

as the input signal, we can consider that the output signal approximately duplicates the input signal. Hence the name cathode follower.

6-6 Input capacitance. The input capacitance of a cathode follower consists essentially of the effects of (1) the grid-to-cathode capacitance of the tube and (2) the grid-to-plate capacitance of the tube (see Fig. 6-9).

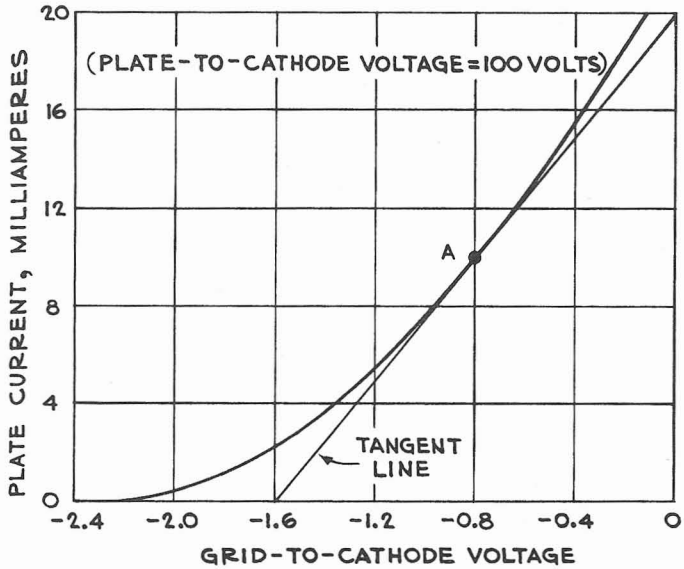

Fig. 6-8 Assume that this curve represents the plate current-grid voltage characteristics of the tube in Fig. 6-7. Then we can use this curve to find the approximate internal impedance of the tube itself, measured at the cathode pin. First note that the 80-ohm cathode resistor R_k in Fig. 6-7 establishes the tube operating point as point A in Fig. 6-8. (To check this, observe that a current of 10 milliamperes in 80 ohms produces an 0.8-volt drop--the grid-to-cathode bias corresponding to point A). Next, to find the mutual conductance of the tube at operating point A, we draw a straight tangent line to the curve at point A. We see that the tangent line intercepts a base interval corresponding to 1.6 volts and a vertical interval corresponding to 20 milliamperes (0.02 ampere). Thus, at operating point A, the mutual conductance g_m is $0.02/1.6 \cong 0.0125$ mho. Since the tube internal impedance at the cathode pin is approximately $1/g_m$, the tube whose characteristic curve is shown in Fig. 6-8 has an internal source impedance of about $1/0.0125 \cong 80$ ohms.

To observe the effect of the grid-to-cathode capacitance C_{gk}, suppose that C_{gk} is 2 picofarads, and that the voltage gain of the stage is 0.9. If we apply an input signal-voltage change of +1 volt to the grid of the tube, then the cathode output voltage changes by +0.9 volt. Thus we change the voltage across C_{gk} by 0.1 volt--thereby changing the charge stored in C_{gk}. But this 0.1-volt change across the 2-picofarad capacitance C_{gp} alters the charge in coulombs exactly as much as a 1-volt change (the actual input signal) across a capacitance of only 0.2 picofarad. Therefore

the actual grid-to-cathode capacitance (2 picofarads) loads the source only as much as if C_{gk} were a grid-to-ground capacitance of only 0.2 picofarad.

The grid-to-plate capacitance C_{gp} in Fig. 6-9 presents a simple shunt capacitance across the input terminals, since the power supply is a short circuit to signal variations.

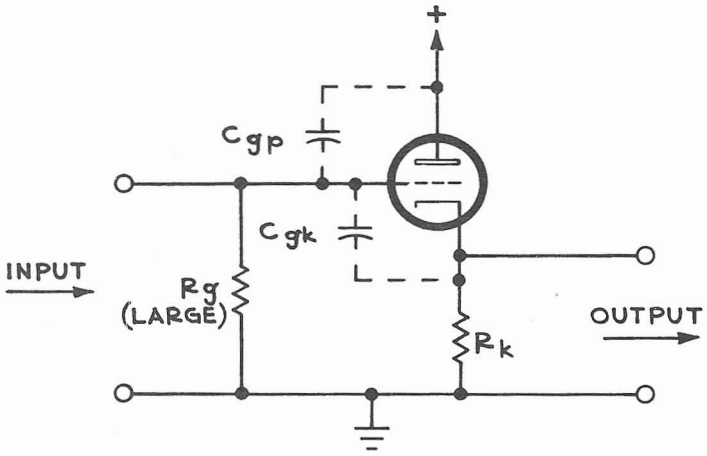

Fig. 6-9 Illustrating that the input capacitance of a cathode-follower stage is small. If we apply a given grid-input voltage change, this input signal causes the cathode output voltage to change in the same direction. Since the voltage gain of the stage is commonly between 0.5 and 0.99, the new grid-to-cathode voltage (with the input signal applied) isn't much different from the original grid-to-cathode bias voltage that existed before we applied the signal. Since we haven't changed the voltage across the grid-to-cathode capacitance C_{gk} very much, this capacitance hasn't required much charging current. And therefore C_{gk} causes relatively little loading effect on the source. (As far as the grid-to-plate capacitance C_{gp} is concerned, C_{gp} acts simply as a shunting grid-to-ground capacitance since the positive power supply acts as a short circuit to signal variations.) The resulting total input capacitance is considerably less than for a plate-loaded amplifier using a similar tube (see Sec. 5-3).

Thus, as far as the signal source is concerned, the input terminals of the cathode follower represent a capacitance equal to a fraction of the rated grid-to-cathode capacitance of the tube--plus the rated grid-to-plate capacitance. The input capacitance of a plate-loaded amplifier (Sec. 5-3) is ordinarily considerably greater than the input capacitance of the cathode follower. We can make the effective input capacitance of the cathode follower even smaller by increasing R_k so that the voltage gain of the stage approaches unity.

6-7 Cathode-follower probes. Suppose we are using an oscilloscope to look at a waveform developed by a certain source. As we have learned (Sec. 4-1), the vertical-input circuit of the oscilloscope causes a certain amount of resistive and capacitive loading on the source. Unless the internal impedance

of the source is low, this loading might (1) distort the waveform, or (2) reduce the amplitude of the waveform, or both.

We can use a voltage-divider probe (Sec. 4-2) to reduce the loading and thus reduce the waveform distortion. But the voltage-divider probe also attenuates the signal we want to display. Consequently, if the signal is already small, the voltage-divider probe can attenuate the signal to a point where it no longer produces a useful display. Therefore the voltage-divider probe might not fill the bill when we need to look at a small waveform from a high-impedance source.

What we need for such purposes is a probe that (1) loads the source only lightly, but still (2) has a voltage gain as close as possible to unity. We can make such a probe by placing a cathode follower inside the probe body. The small input capacitance of the cathode follower puts only a light load on the source. But the voltage gain in the cathode follower can readily be between 0.5 and unity.

In Table 6-1, we compare the loading effects and the voltage gains that we might get (1) when we use a typical voltage-divider probe, and (2) when we use a typical cathode-follower probe.

Table 6-1

	Loading effect	Voltage gain
Typical voltage-divider probe	10 megohms 11.5 picofarads	0.1 (10X attenuation)
Typical cathode-follower probe	40 megohms 4 picofarads	0.8-0.85

From this comparison, we might at first imagine that we should forget about the voltage-divider probe and simply use the cathode-follower probe for all our waveform observations. But there are some other considerations, including these:

1. A cathode-follower probe can readily be overloaded by large input signals. This overloading causes waveform distortion. (For example, one type of cathode-follower probe introduces about 3 percent amplitude distortion when the input voltage exceeds about 5 volts. Some other cathode-follower probes can accommodate only much smaller input voltages.)

2. Attenuators are available that can be attached to the nose of the cathode-follower probe, for signals larger than those the probe can handle directly. (These attenuators affect both the input impedance and the frequency response of the probe.)

3. If an uninformed worker uses a cathode-follower probe in such a way that the probe is overloaded--as discussed above--he can get readings or waveforms that are very misleading.

4. Suppose we connect the cathode-follower-probe input to a waveform source whose internal impedance is inductive at some frequency. Then the cathode-follower-probe input impedance drops--perhaps sufficiently to change the amplitude or shape of the displayed waveform. (If the Q of the source-and-probe circuit is high, the probe-input impedance can actually become negative at some frequency so that the cathode-follower-probe circuit oscillates.) See your probe Instruction Manual or consult your Field Engineer.

5. The cathode-follower probe costs significantly more than the voltage-divider probe. Furthermore, the cathode-follower probe requires a stable, low-ripple power supply that is external to the probe. (Probe power supplies are available. Some oscilloscope types include probe-power connections.)

6. If the tube needs replacing in a cathode-follower probe, the new tube should be carefully selected and installed at the factory or by a technician trained in such work.

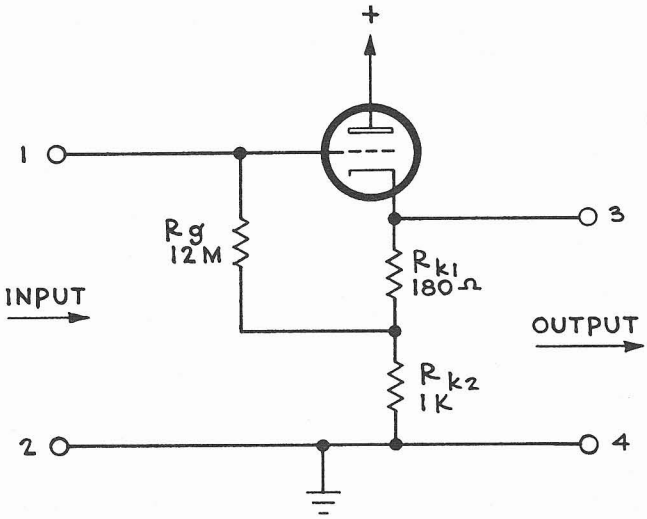

Fig. 6-10 Means of increasing the apparent value of the grid resistor R_g in a cathode follower, to reduce the shunt loading effect on the signal source. R_{k1} and R_{k2} act as a voltage divider, applying most of the output-signal voltage to the lower terminal of the grid-return resistor R_g. Since the output-signal voltage at the cathode terminal is nearly as great as the input-signal voltage, only a small part of the signal voltage appears across R_g. In Fig. 6-10, the resulting signal current in R_g is so small that this 12-megohm resistor appears to the input-signal source as if it were a 40-megohm resistance between the input terminals.

If you think a cathode-follower probe will help you, ask your Tektronix Field Engineer or Representative to help you select the probe and apply it to your work.

6-8 A method of increasing apparent input resistance. In order to reduce the loading on the signal source, we often want to make the resistive component of the input impedance of a stage very large. To accomplish this result, we might make the grid resistor R_g very large. But tube manufacturers often specify a maximum value of R_g that we should not exceed. This maximum value of R_g is based principally on grid-current considerations. A typical recommended maximum value for R_g is 1 megohm.

When we use a cathode resistor to obtain the negative grid-to-cathode bias voltage--as in the case of cathode followers and of many plate-loaded amplifiers--the upper limit for R_g is not so critical. (The tendency for grid current in R_g to make the dc plate curent unstable is largely balanced out, since a change in plate current causes a change of bias voltage developed across the cathode resistor--and this bias-voltage change is in a direction that tends to bring the plate current back to its original value.) However, even with cathode-resistor bias, we cannot expect the tube to operate reliably in every case when we use indiscriminately large values of grid resistance R_g.

A circuit like that of Fig. 6-10 can make the apparent grid-input-circuit resistance of a cathode follower very large--considerably larger than the actual value of R_g. In the figure, the actual value of R_g is 12 megohms. But the apparent resistance seen by a source that drives the grid circuit is about 40 megohms. Let us see how the circuit of Fig. 6-10 accomplishes this increase in apparent input resistance.

Suppose, for example, that we apply an input signal voltage of +1 volt to terminals 1 and 2 of the circuit of Fig. 6-10. Assume that the gain of the cathode follower is, say, 0.83. Then the output signal voltage that appears across terminals 3 and 4 will be 0.83 volt. Because of the voltage-divider action of the series cathode resistors R_{k1} and R_{k2}, only a part of this output-signal voltage will appear at the junction of R_{k1} and R_{k2}. In fact, since R_{k1} = 180 ohms and R_{k2} = 1,000 ohms, the signal voltage at the junction of these two resistors will be 1,000/1,180 times the output-signal voltage of 0.83 volt. Thus the signal voltage at the junction of R_{k1} and R_{k2} is about 0.7 volt.

Since the signal voltage at the lower end of R_g is 0.7 volt, and the signal voltage at the upper end of R_g is 1 volt, the signal voltage across R_g is only 0.3 volt. The resulting signal current in R_g is, by Ohm's law, equal to 0.3/12,000,000 ampere, or 0.025 microampere.

Thus the input circuit takes a signal current of 0.025 microampere when the source signal voltage is 1 volt. By Ohm's law, the apparent resistance of the input circuit is 1/0.000,000,025 ohms or 40 megohms. This increase in apparent grid-input-circuit resistance occurs simply because we connected the lower end of R_g to the junction of the two series cathode resistors rather than to ground. We should note, however, that there is a certain sacrifice in the voltage gain as compared to the gain we would get with the lower end of R_g grounded.

The circuit of Fig. 6-10 is actually used in some cathode-follower probes.

6-9 Bootstrap capacitor. Figure 6-11 shows a plate-loaded amplifier V_1 that supplies a varying signal voltage to the grid-input circuit of a cathode-follower tube V_2. As we have already learned (Secs. 2-5 to 2-9), there will exist an unavoidable shunt capacitance C_p at the plate of the amplifier tube V_1. And the RC circuit composed of the plate-load resistor R_L and the shunt capacitance C_p might cause the risetime of the circuit to be longer than we can tolerate.

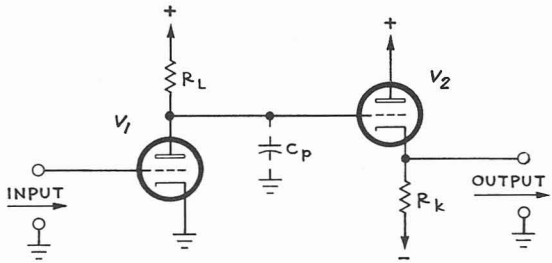

Fig. 6-11 Here a plate-loaded amplifier V_1 drives the input of a cathode follower V_2. The plate-to-ground capacitance of V_1 (plus the small input capacitance of V_2) is represented by C_p. The risetime of the coupling circuit between V_1 and V_2 is determined by the time constant $R_L C_p$.

If, for example, we apply a negative-going input-voltage step (instant A, Fig. 6-12) to the grid of V_1, the plate current will be abruptly reduced. And the signal voltage at the plate of V_1 will rise according to a curve like Fig. 6-12b, as we learned in Sec. 2-8.

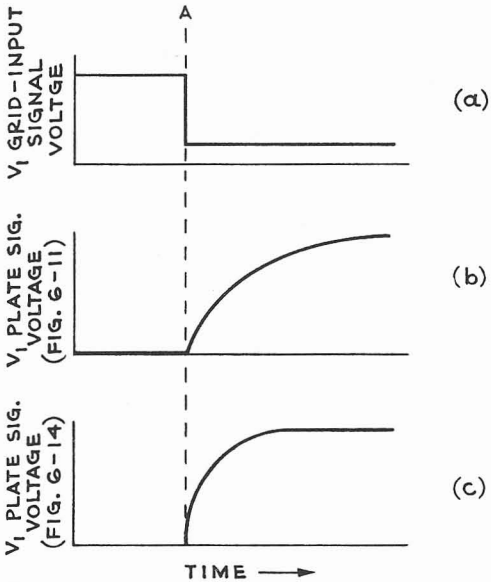

Fig. 6-12 (a) An example of a grid-input signal voltage that we can apply to V_1 in Fig. 6-11 to observe the effect upon the output signal of the time constant $R_L C_p$ in Fig. 6-11.

(b) V_1 plate signal voltage applied to the grid of V_2 in Fig. 6-11 when we apply to the grid of V_1 the waveform of diagram a. (See Sec. 2-8.)

(c) Faster response of the coupling circuit between V_1 and V_2 to the input signal of diagram a, achieved by the hypothetical method of Fig. 6-13 or by the practical method of Fig. 6-14.

We can use peaking or compensating circuits (Sec. 5-4 to 5-7) to shorten the risetime. But another approach to shortening the risetime is shown in Fig. 6-13. Here the upper end of the plate-load resistor R_L is connected

to the movable contact of a variable voltage divider R. Suppose we could provide some way by which the movable contact would automatically move toward the positive end of R when the signal voltage at the plate of V_1 tended to rise. If we could make this provision, then the stored charge in C_p would be more quickly altered so that the signal voltage at the plate of V_1 could rise more rapidly.

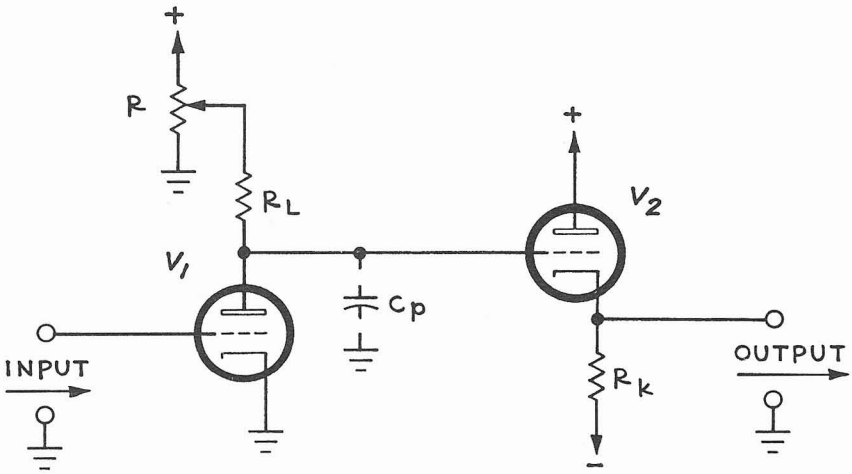

Fig. 6-13 A hypothetical way to improve the speed of the response of the coupling circuit between V_1 and V_2 in Fig. 6-11. Here we apply the waveform of Fig. 6-12a to the grid of V_1. And we assume that we can provide some way by which a voltage rise at the plate of V_1 moves the variable contact on R upward. The resulting voltage rise at the upper end of R_L helps to charge C_p while the input waveform changes. Thus the voltage at the plate of V_1 can change more rapidly, as indicated in Fig. 6-12c.

We cannot, of course, provide the mechanical arrangement just suggested--except possibly for signals that change quite slowly. But a system that operates in somewhat the same way can be arranged electronically, as follows.

Figure 6-14 shows a small capacitance C_b connected between the cathode output terminal of the cathode follower V_2 and a tap on the plate-load resistor R_L. When the signal output voltage at the plate of V_1 begins to rise, this voltage rise is applied to the grid of V_2. And the signal-voltage rise appears only slightly diminished at the cathode output terminal of V_2. The same signal-voltage rise is coupled through C_b to the tap on R_L, so that the voltage at the tap rises more rapidly than it would if the circuit through C_b were absent. Thus electrons are drawn away from C_p more rapidly than they would if C_b were absent. The action continues during the plate-voltage rise of V_1--each increase in plate voltage causing a corresponding rise in voltage at the tap on R_L so that electrons can be drawn rapidly away from C_b. The corresponding output-voltage waveform at the plate of V_1 is therefore like that of Fig. 6-12c.

In thus improving the risetime of the response to a step-voltage input, we have also made the circuit of Fig. 6-14 capable of responding to other rapidly changing waveforms. Inasmuch as this improvement is actually intended to affect only waveforms that change rapidly, we make C_b small enough that its coupling action is negligible for slowly changing waveforms. We can refer to C_b as a bootstrap capacitor. It is, in general, necessary to select the value of C_b and the tap point on R_L so that optimum results are obtained.

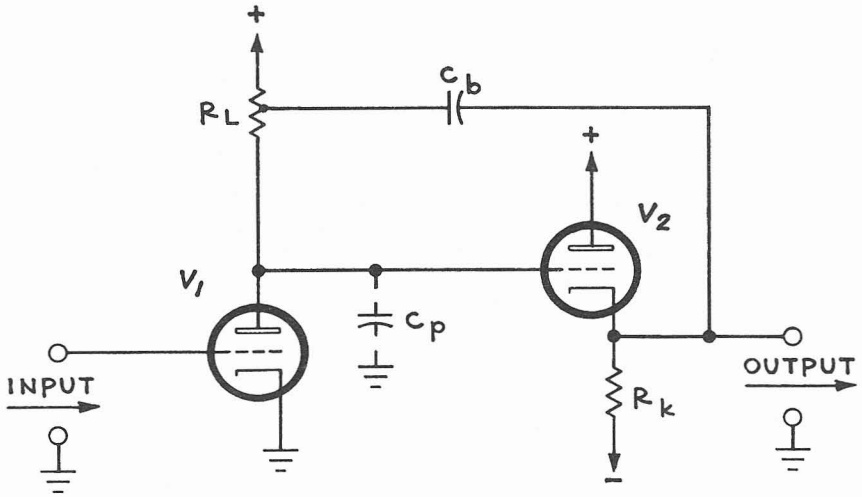

Fig. 6-14 A practical way to achieve the result we considered in Fig. 6-13. Here the V_1 grid-input signal of Fig. 6-12a makes the voltage at the plate of V_1 rise. By cathode-follower action, V_2 couples this voltage rise to the cathode of V_2. The bootstrap capacitor C_b applies this voltage rise to the tap on the plate-load resistor R_L, helping to charge C_p more rapidly. Therefore, in response to the input waveform of Fig. 6-12a, the voltage at the plate of V_1 can change relatively rapidly as indicated in Fig. 6-12c.

Chapter 7

CIRCUITS BASED ON THE CATHODE FOLLOWER

In this chapter we take up some circuits whose operation depends on the cathode-follower principles we learned in Chap. 6.

7-1 Cathode-coupled amplifiers. Figure 7-1 shows a circuit where we apply the input signal to the grid of a cathode follower V_1. We use the output signal from the cathode of V_1 to drive the input cathode terminal of a grounded-grid amplifier V_2 (Sec. 5-14). We take the output signal from the plate of V_2.

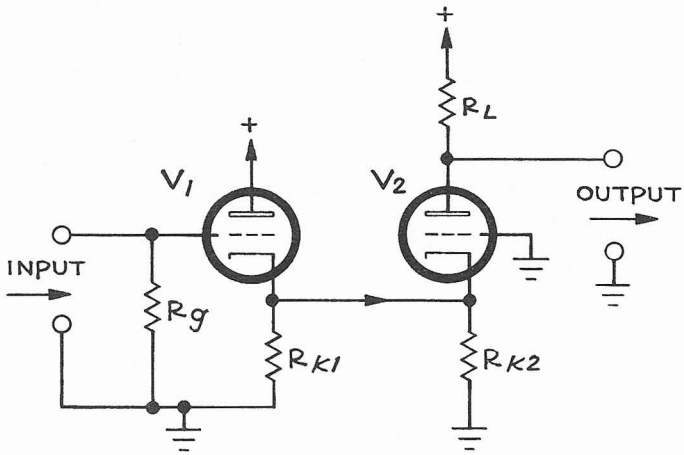

Fig. 7-1 A cathode-coupled amplifier. We use V_1 as a cathode follower (Sec. 6-3) to drive V_2. V_2 operates as a grounded-grid amplifier described in Sec. 5-14. The cathode follower has a voltage gain somewhat less than one. Therefore the over-all voltage gain in Fig. 7-1 is somewhat less than the voltage gain of the grounded-grid amplifier V_2 alone. And neither the cathode follower nor the grounded-grid amplifier inverts the signal; therefore the polarity of the output waveform in Fig. 7-1 is the same as that of the input waveform.

As we have learned, the input impedance at the cathode terminal of V_2 is low. But the signal we apply to the cathode terminal of V_2 comes from the cathode follower V_1. And a cathode follower ordinarily has a low internal impedance--so that the cathode follower V_1 is a suitable source for driving the low input impedance of the grounded-grid amplifier V_2.

In practice we usually combine the cathode resistor R_{k1} associated with V_1 and the cathode resistor R_{k2} associated with V_2. This arrangement is shown in Fig. 7-2, where a single cathode resistor R_k has a value equal to the equivalent resistance or R_{k1} and R_{k2} in parallel. We refer to the

circuit of Fig. 7-2 as a cathode-coupled amplifier.* Let's consider some of the interesting characteristics of the cathode-coupled amplifier.

1. The input capacitance at the grid of V_1 is small (Sec. 6-6).

2. The polarity of the output signal from the cathode follower V_1 is the same as that of the input signal (Sec. 6-3). And the polarity of the output signal voltage from the grounded-grid amplifier V_2 is the same as that of the signal voltage applied to the cathode of V_2 (Sec. 5-14). Therefore the polarity of the output signal voltage at the plate of V_2 is the same as that of the input signal voltage applied to the grid of V_1.

3. Let's estimate the voltage gain of the circuit of Fig. 7-2. (For simplicity, assume that V_1 and V_2 are identical and that they operate at the same no-signal grid and plate voltages. Then the input impedance at the cathode of V_2 is about the same as the internal output impedance at the cathode of V_1.) Now suppose that we apply a +1-volt signal to the grid of V_1. If V_1 worked into an open circuit (that is, if the cathode circuit of V_2 were disconnected), then the output signal at the cathode of V_1 would be nearly +1 volt. Now we connect the V_2 cathode circuit to the V_1 cathode, in effect we load a source (the cathode circuit of V_1) with an impedance (the cathode circuit of V_2) equal to the impedance of the source. In such a case, the source output voltage drops to one-half its open-circuit value. Thus the signal voltage we actually apply to the cathode of V_2 is about 1/2 volt. Therefore the voltage gain of the circuit of Fig. 7-2 is about one-half the gain of V_2 operating alone.

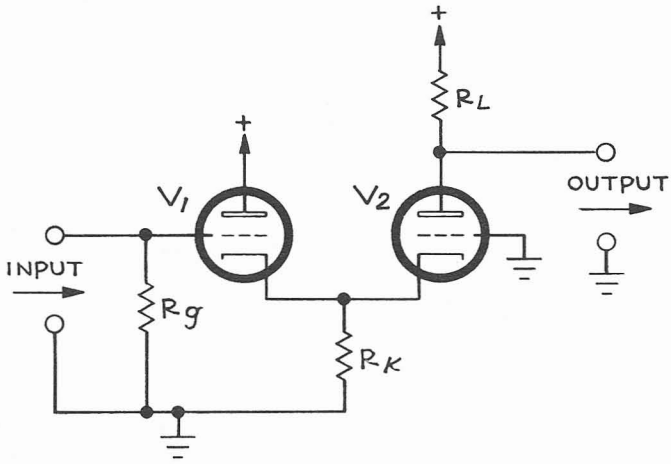

Fig. 7-2 The cathode-coupled amplifier of Fig. 7-1, rearranged to use only a single common cathode resistor R_k. In Fig. 7-2 we use a value of R_k equal to the equivalent parallel resistance of R_{k1} and R_{k2} in Fig. 7-1.

* The term cathode-coupled amplifier has also been applied to the cathode follower itself. But in this book we reserve the term cathode-coupled amplifier for circuits like that of Fig. 7-2.

7-2 Voltage comparators. When we apply a fixed voltage to the grid of V_2 in Fig. 7-2, and apply a varying voltage to the grid of V_1, we have in effect a voltage comparator (or amplitude comparator). That is, the output voltage at the V_1 plate indicates voltage variations at the V_1 grid relative to the fixed V_2 grid voltage.

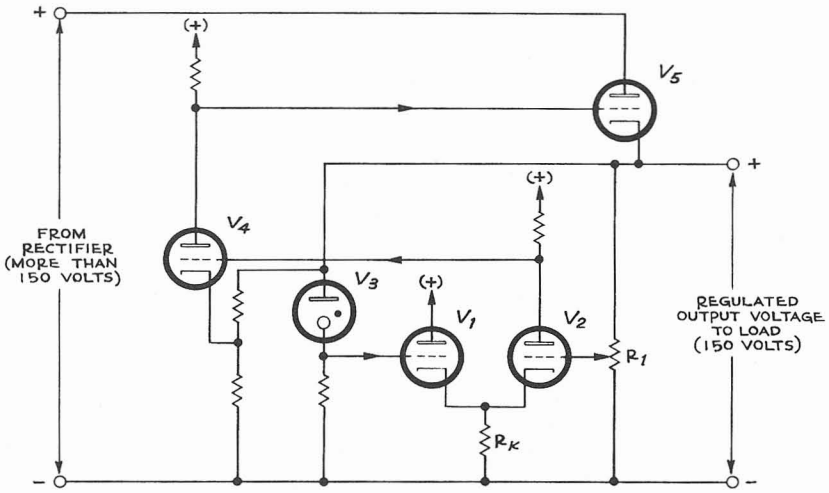

Fig. 7-3 An application of the cathode-coupled amplifier as a voltage comparator in a regulated power supply, as described in the text.

Let us consider some uses that we can make of the voltage comparator.

7-3 Regulated power supply. An application of the voltage comparator is shown in the simplified power-supply regulating circuit of Fig. 7-3. The supply is intended to develop a fixed voltage of 150 volts between its output terminals. The regulating circuit of Fig. 7-3 is intended to minimize the effects of line-voltage or load-current variations, as far as the amount of output voltage is concerned.

Note that the regulating-circuit input voltage from the rectifier exceeds 150 volts. But the regulating circuit operates so that the voltage drop across the series-regulating tube V_5 brings the power-supply output voltage down to 150 volts and holds the output voltage at that value. Let us see how this regulating action occurs.

The voltage-reference tube V_3 operates in such a way that it normally maintains some fixed voltage drop between its terminals. In the case shown, V_3 maintains a voltage of 87 volts between its terminals. Thus, even if the power-supply output voltage changes, the voltage between the V_1 grid and the positive regulator-circuit output terminal remains at 87 volts.

The voltage comparator circuit consists of V_1 and V_2. The purpose of this comparator circuit is to sense any deviations between the actual regulator-circuit output voltage and the rated output voltage of 150 volts. To study the operation of the comparator in this application, suppose that the power-supply output voltage tends to change--either because of a line-voltage change or because of an output load-current change. For example, suppose the output voltage tends to change to 151 volts. We remember that V3 holds the V_1 grid at a fixed 87-volt potential difference from the positive regulator-circuit output terminal. But since the power-supply output voltage tends to increase to 151 volts, the potential at the grid of V_1 tends to increase by 1 volt with respect to the negative power-supply output terminal. As in the cathode-coupled amplifier (Sec. 7-1), the cathode of V_1 couples about one-half of this 1-volt change to the cathode of V_2. Thus the cathodes of V_1 and V_2 tend to become about 1/2 volt more positive with reference to the negative power-supply output terminal.

Imagine for the time being that we hold the grid of V_2 at some fixed dc voltage with respect to the negative power-supply output terminal (instead of connecting the grid of V_2 as shown in the figure). Then when the cathodes of V_1 and V_2 become 1/2 volt more positive as just described, the V_2 plate voltage increases by a much greater amount--determined by the V_2 voltage gain. This voltage increase reaches the grid of the amplifier V_4. As a result, a still greater voltage change appears at the plate of V_4--this time, a change in the negative direction. Thus the grid of the series-regulator tube V_5 becomes more negative, so that the voltage drop is increased between the plate and the cathode of V_5. As a result, the regulated-circuit output voltage drops back to almost its original value of 150 volts.

In the actual power supply, we note that the grid of V_2 is connected to an adjustable tap on R_1--instead of to some fixed-voltage source as we have just assumed. Thus when the output voltage tends to increase to 151 volts, and the cathode voltage of V_2 correspondingly rises 1/2 volt, the V_2 grid voltage also increases. The amount of increase in the V_2 grid voltage is a fraction of the full 1-volt regulator-circuit output-voltage increase--determined by the voltage-division ratio of R_1. This increase in the V_2 grid voltage counteracts the desirable effect of the change in V_2 cathode voltage so that the effective voltage gain of V_2 is reduced. But the succeeding amplifier V_4 readily makes up for this reduction in voltage gain.

Furthermore, the connection of the grid of V_2 to the tap on R_1 serves a useful purpose. This connection enables us to set the normal operating points of V_1 and V_2 so that the power-supply output voltage is held at 150 volts rather than at some other neighboring voltage.

In using a power supply like the one we just considered, we could ground either the negative or the positive output terminal without affecting the operation we have studied. Many oscilloscopes use the circuit of Fig. 7-3, with modifications, as a -150-volt supply with the positive terminal grounded. We then designate R_1 as the -150-VOLT ADJ control.

7-4 Voltage discriminator for delay-pickoff systems. Another application of the voltage comparator is in a system for deriving delayed sweeps, discussed in detail in Chap. 11. Here, we want to generate a waveform that appears at some prescribed and controllable time later than some given input pulse.

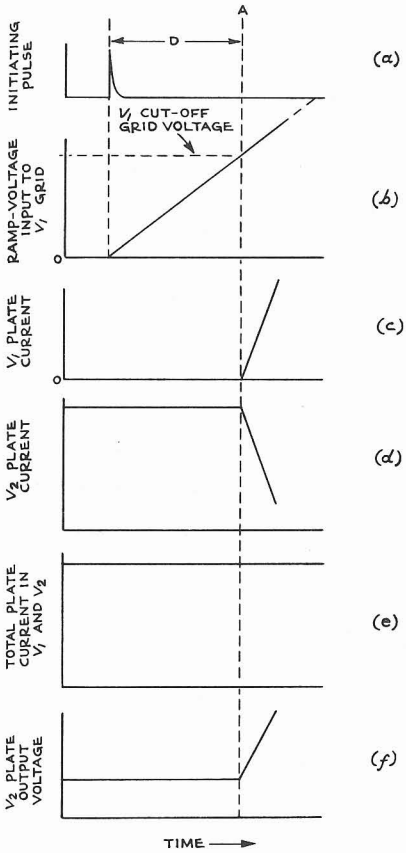

Fig. 7-4 Another application of the cathode-coupled amplifier as a voltage comparator (see the circuit of Fig. 7-5). Here we are given some externally generated waveform, such as that of Fig. 7-4a, for example. Using the arrival of this given waveform as a reference instant, we want to develop an output waveform (Fig. 7-4f) that appears later. And we want to control the amount of time delay D that separates these two waveforms. To do this, we use the input waveform of Fig. 7-4a to initiate a ramp waveform (Fig. 7-4b) by methods covered later in Chaps. 9 and 10. We use this ramp waveform to drive the voltage comparator of Fig. 7-5. In Fig. 7-5, the large value of cathode resistance R_k, common to V_1 and V_2, ideally maintains the total cathode current of these two tubes constant (Fig. 7-4e). The cathode-to-plate current in V_1 is originally cut off (Fig. 7-4c). But at instant A the input ramp voltage rises to a point where V_1 starts to conduct. Therefore, at instant A the cathode-to-plate current in V_2 must drop (Fig. 7-4d). Correspondingly the plate-output voltage of V_2 rises (Fig. 7-4f) producing the desired output waveform.

To accomplish this result, we use the given input pulse (Fig. 7-4a) to initiate a ramp voltage waveform (Fig. 7-4b) that rises at a steady rate--for example, at 10 volts per second. (We shall study circuits that initiate and generate this ramp waveform later, in Chap. 9.) We note that, at any instant, the waveform of Fig. 7-4b reaches a voltage that indicates directly the time interval that has elapsed since that waveform started to rise. Thus, if the waveform of Fig. 7-4b rises at 10 volts per second, then after 5 seconds its amplitude is 50 volts; after 10 seconds its amplitude is 100 volts, etc.

We apply the ramp waveform of Fig. 7-4b to the grid of V_1 in a voltage comparator like that of Fig. 7-2 (redrawn in Fig. 7-5). We maintain the

grid of V_2 at some fixed adjustable positive voltage. We can adjust this fixed voltage by means of the adjustable voltage divider R. And we make the common cathode resistor R_k very large, as shown in Fig. 7-5. The circuit operates in the following manner:

1. Before the input voltage waveform (Fig. 7-4b) begins its steady rise, the grid of V_1 is essentially at ground potential. But the grid of V_2 is at some positive voltage that we selected by means of the voltage-divider R. Therefore more cathode current flows in V_2 than in V_1. Actually V_2 conducts so much more cathode current that, by cathode-follower action, V_2 raises the common-cathode voltage of V_1 and V_2 to a positive voltage that essentially equals the grid voltage of V_2. And this positive cathode voltage is sufficient to cut off the current in V_1.

2. At some instant A (Fig. 7-4b) the input waveform to the grid of V_1 rises to a voltage sufficient to cause current to flow in V_1, as shown in Fig. 7-4c.

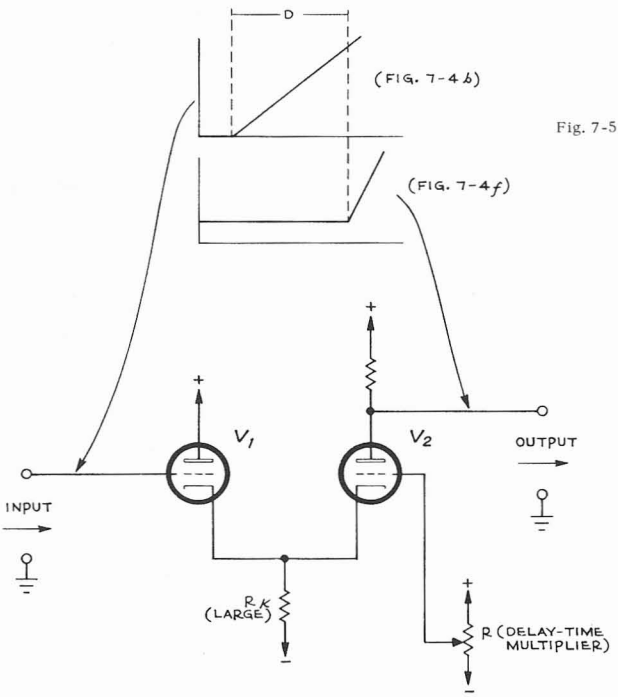

Fig. 7-5 A cathode-coupled amplifier serves as a voltage comparator (here called a delay-pickoff circuit) for the action described in Fig. 7-4. We can use the resistor R to set the initial grid voltage of V_2; this voltage in turn determines the common cathode voltage. Thus we can use R to predetermine how positive the ramp voltage (Fig. 7-4b) must go to make V_1 conduct. In this way we can preset the delay interval D in Fig. 7-4.

3. The common cathode resistor R_k is very large (that is, the pair of tubes V_1 and V_2 have a common "long tail"). Therefore the total cathode current in V_1 and V_2 must remain essentially constant, just as in the case of a single long-tailed tube (Sec. 5-13).

4. Therefore when current begins to flow in V_1 (at instant A, Fig. 7-4c), then the plate current in V_2 must instantly decrease (instant A, Fig. 7-4d). The sum of the plate currents in V_1 and V_2 ideally remains constant (Fig. 7-4e), as just discussed in Step 3.

5. When the plate current in V_2 falls, the output signal voltage at the plate of V_2 rises as shown in Fig. 7-4f. This voltage rise (Fig. 7-4f) provides the output waveform we wanted to appear at a time later than the given input pulse (Fig. 7-4a).

We can control the delay interval D between the original pulse (Fig. 7-4a) and the output waveform (Fig. 7-4f) by means of the voltage divider R. Suppose, for example, that we adjust R so that the fixed input voltage to the grid of V_2 is more positive. Then, before the input ramp (Fig. 7-4b) starts, the common-cathode point of V_1 and V_2 is more positive. Therefore the V_1 operating point appears farther within the V_1 cutoff region. Therefore the input steadily rising waveform (Fig. 7-4b) must rise to a greater voltage to make current flow in V_1. Correspondingly, this input waveform of Fig. 7-4b requires a longer time to reach this more positive voltage--so that R controls the amount of time delay D. We refer to the voltage divider R as a DELAY-TIME MULTIPLIER control. We shall explain reasons for this particular name for R when we study the foregoing applications in more detail (Chap. 11).

7-5 Paraphase amplifier. The source of a signal we want to observe with an oscilloscope is very often a single-ended source. That is, the source has one terminal that supplies the signal voltage, and another terminal that has a fixed potential, often ground.

On the other hand, a cathode-ray tube generally operates best when we apply a push-pull signal to its vertical- or horizontal-deflection plates. That is, we need a signal that comes from a pair of terminals--where the voltage at one terminal goes positive while the voltage at the other terminal goes negative by a corresponding amount. Furthermore, the amplifiers that apply the signals to the deflection plates generally operate best when these amplifiers are of push-pull design. Thus we often need a device that converts a signal from a single-ended source into a push-pull signal. The circuit of Fig. 7-6 does this. Here's how it works.

Suppose we apply an input-signal voltage from a single-ended source to the grid of V_1. This signal voltage produces plate-current changes in V_1. These plate-current changes cause corresponding changes in the voltage drop across the plate-load resistor R_{L1} that is connected in the plate of V_1. Thus, at the plate of V_1, the original signal appears in amplified form--but with its polarity reversed as in the simple plate-loaded amplifier (Sec. 2-6).

But V_1 does something more than function as a plate-loaded amplifier. V_1 is also the input tube of a cathode-coupled amplifier, since the output signal at the cathode of V_1 drives the cathode of a second tube V_2. As we have already seen (Sec. 7-1), the polarity of the output signal at the plate

of V_2 in a cathode-coupled amplifier is the same as the polarity of the input signal at the grid of V_1.

Thus, when we apply a signal from a single-ended source to the circuit of Fig. 7-6, the circuit delivers a push-pull output signal--actually, two output signals that are similar except that one of the output signals is reversed in polarity (phase) with respect to the other. For this reason, We call the circuit of Fig. 7-6 a paraphase amplifier (from the expression "pair of phases"). Other names for such a circuit are phase inverter and phase splitter. Of course, there are other forms of paraphase circuit--but the system of Fig. 7-6 is widely used in oscilloscopes.

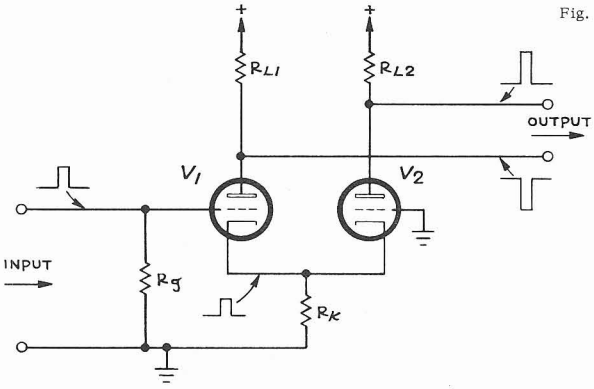

Fig. 7-6 A paraphase amplifier circuit. When we apply an input waveform to the grid of V_1, an amplified and inverted version of this waveform appears at the plate of V_1 according to the action of a plate-loaded amplifier (Sec. 2-6). But at the same time V_1 acts in conjunction with V_2 as a cathode-coupled amplifier (Fig. 7-1). Thus an amplified and uninverted version of the original input waveform appears at the plate of V_2. Therefore this circuit provides a push-pull output from a single-ended input.

7-6 Variable gain control. In Chap. 4 we studied compensated voltage dividers that control the overall voltage gain of an amplifier. These compensated voltage dividers serve as well when we want to control the overall voltage gain in calibrated steps. But for some purposes (as when we want to compare two waveforms that differ somewhat in amplitude) we want a control that gives us a continuously variable, uncalibrated adjustment of the voltage gain over a certain range.

In general, we can't construct a continuously variable compensated voltage divider. For if we properly compensate the divider when its movable arm rests at some given position, the shunt-capacitance ratio is correct only when the movable arm rests at that given position. We can largely solve the variable-gain-control problem by placing the control in a low-impedance part of the circuit, where the unavoidable capacitances don't affect the circuit response much. An effective arrangement consists of modifying the paraphase circuit of Fig. 7-6 as shown in Fig. 7-7.

In Fig. 7-7 we use two cathode resistors, R_{k1} and R_{k2}, instead of a common cathode resistor. And we connect the cathode of V_1 to the cathode of V_2 by means of the variable gain control R_1. From a simplified viewpoint, consider that R_1 and R_{k2} are a voltage divider that controls the amount of coupling between the cathode-output terminal of V_1 and the cathode-input terminal of V_2. If we increase R_1, we reduce the input-signal voltage to the cathode

of V_2. Thus we reduce the peak-to-peak output voltage that we get from the amplifier stage--or, in other words, we reduce the voltage gain.

But the foregoing gain-reducing operation, by itself, simply reduces the output-signal voltage at the V_2 plate. In the absence of any other effect, then, the V_2 plate-output signal voltage becomes smaller than the V_1 plate-output signal voltage. In other words, the amplifier push-pull output-signal voltage appears seriously unbalanced. And this unbalance might distort the cathode-ray-tube display.

However, another effect counteracts this unbalance. Note that R_{k1} is shunted by R_1 in series with the input impedance of the V_1 grounded-grid-amplifier circuit. Therefore when we increase R_1 we not only reduce the V_2 output signal but we also effectively increase the resistance in the V_1 cathode lead. This last-named effect increases the amount of negative feedback (Sec. 5-11) in the V_1 circuit. Thus we largely overcome the unbalancing effect of adjusting R_1. We commonly call the variable resistor R_1 a VARIABLE gain control.*

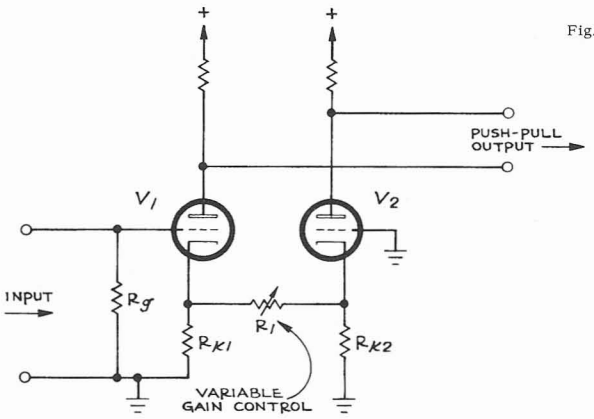

Fig. 7-7 We can provide a VARIABLE gain control for the cathode-coupled amplifier of Fig. 7-1 or for the paraphase amplifier of Fig. 7-6. If we increase the resistance of the VARIABLE gain control R_1, the voltage-divider action of R_1 and R_{k2} reduces the input-signal voltage to the cathode of V_2. Thus a smaller output-signal voltage appears at the plate of V_2. Furthermore, an increase in R_1 effectively increases the total resistance connected in the cathode circuit of V_1. The resulting negative-feedback action (Sec. 5-11) reduces the output-signal voltage at the plate of V_1.

Suppose in Fig. 7-7 we set the VARIABLE gain control to the low-resistance end of its range for maximum voltage gain. (This setting is usually marked CALIBRATED on the panel.) Now we want the amplifier to have its specified gain so that the voltage readings we make with the oscilloscope will be accurate. To set the amplifier gain to its specified value, we can use the GAIN ADJ control R_1 shown in Fig. 7-8. We make the adjustment as follows: First, we set the VARIABLE gain control R_1 to its low-resistance CALIBRATED position. Then, by means of the GAIN ADJ. control R_2 we set the effective common-cathode resistance in V_1 and V_2. Thus we control

*Alternatively, in Fig. 7-7, we might take only a "single-ended" output signal from the V_2 plate alone. Then we have simply a cathode-coupled amplifier--Sec. 7-1--with a VARIABLE gain control. In this case we might eliminate the V_1 plate-load resistor.

the fixed negative grid-to-cathode bias voltage on these two tubes. In this way we set the operating points of these tubes (and thus their mutual conductances) to achieve the desired voltage gain.

> IMPORTANT
>
> The oscilloscope provides us with accurate, calibrated voltage readings ONLY when we set the VARIABLE gain control to its CALIBRATED position. For it is only when we set the VARIABLE gain control to its CALIBRATED position that the amplifier voltage gain is the specified gain, so that the deflection factor is that indicated by the setting of the VOLTS/CM (or VOLTS/DIV) switch.

Possibly you have encountered a case where, when you adjusted the VARIABLE gain control, you changed not only the size of the display but also its position on the cathode-ray-tube screen. This result can occur if the cathodes of V_1 and of V_2 are not at the same dc voltage. The voltage difference between the two cathodes causes a dc current to flow in the VARIABLE gain control R_1--so that when you adjust R_1 you affect the fixed negative grid-to-cathode bias voltages on V_1 and V_2. These bias variations

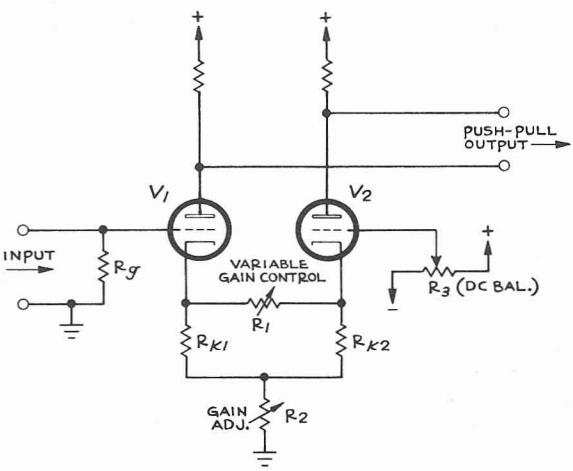

Fig. 7-8 When in Fig. 7-7 we turn the VARIABLE gain control R_1 to its maximum-gain or CALIBRATED position (zero resistance), we usually want some specific value of voltage gain. To set this maximum gain, we can adjust the negative grid-to-cathode bias voltage applied to V_1 and V_2, thus changing the operating points of these tubes on their characteristic curves. To adjust this bias voltage (and therefore the gain), we can change the total resistance in the common-cathode circuit. In Fig. 7-8, for instance, we can set the GAIN ADJ. control R_2 for the desired amplifier gain with the VARIABLE gain control R_1 turned full right (CALIBRATED position). Figure 7-8 also shows one way to prevent a change in the VARIABLE gain-control setting from shifting the output dc voltage levels at the plates of V_1 and V_2. Here we can set the DC BAL. control R_3 so that the trace position on the screen doesn't shift when we turn the VARIABLE gain control R_1.

change the V_1 and V_2 plate currents, so that when you adjust the VARIABLE gain control you also shift the dc levels at the plates of V_1 and V_2. Suppose, for example, that the amplifier of Fig. 7-8 is a part of the vertical-deflection

system in an oscilloscope. Then, when we adjust the VARIABLE gain control, the dc-level shift we just mentioned raises or lowers the display on the screen. The result is much as if we intentionally turned the VERTICAL POSITION control at the same time we turned the VARIABLE gain control.

To avoid this unwanted position change we adjust the DC BAL. (or VAR. ATTEN. BAL.) control shown as R_3 in Fig. 7-8. With R_3 we can set the V_2 dc grid voltage so that, with no input signal, the V_2 cathode voltage is the same as the V_1 cathode voltage. Then no direct current flows in the VARIABLE gain control R_1--so that we can adjust this VARIABLE gain control without affecting the trace position. (Instead of setting the V_2 control-grid voltage, the DC BAL. or VAR. ATTEN. BAL. controls in some instruments set the dc voltages at one or both screens, or suppressors, etc., to equalize the dc cathode voltages.)

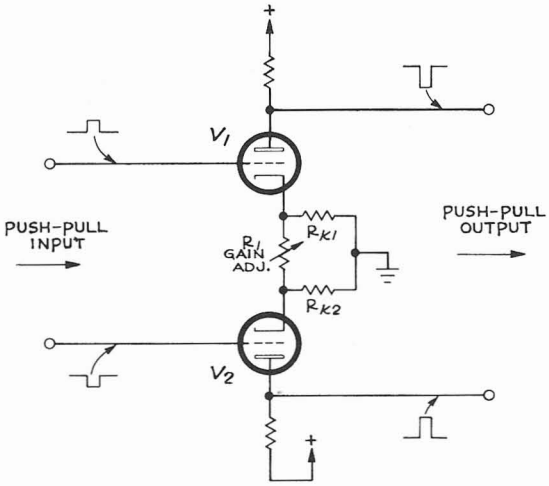

Fig. 7-9 Gain control for a push-pull amplifier. When we apply a push-pull input signal voltage to the grids of V_1 and V_2 as shown, each tube delivers an amplified and inverted version of the input waveform in the manner of a plate-loaded amplifier (Sec. 2-6). In addition, the cathode circuit of each tube drives the cathode circuit of the other tube in the manner of a cathode-coupled amplifier (Fig. 7-7). This cathode-coupled-amplifier action contributes a portion of the amplifier voltage gain. We can use the GAIN ADJ. control R_1 in Fig. 7-9 to adjust the coupling between the cathode circuits, and in this way we can adjust the amplifier voltage gain over a certain range.

7-7 Gain control for push-pull amplifier. Figure 7-9 shows a push-pull amplifier where the input signals we apply to the grids of V_1 and V_2 have the same waveforms but opposite polarities. Each tube functions partly as a plate-loaded amplifier. That is, the input signal at the grid of either tube produces, at the plate of that tube, a reversed-polarity output-signal voltage. Consequently the output signal-voltage polarity at either plate matches the input signal-voltage polarity at the opposite grid.

In addition the cathode circuit of each tube drives the cathode circuit of the other tube, in the manner of a cathode-coupled amplifier. This action reinforces the simple plate-loaded-amplifier action mentioned in the preceding paragraph. But the GAIN ADJ. control R_1 lets us adjust the amount of signal coupling between these two cathode circuits. Therefore we can use R_1 to control the degree of the signal-reinforcing action just mentioned. In this way we can continuously adjust the voltage gain of the push-pull amplifier of Fig. 7-9 over an appreciable range.

7-8 Differential amplifier. Often we want to use an oscilloscope to view a waveform that exists as a voltage between two incoming conductors--where the two conductors also simultaneously carry a second waveform with respect to ground. And we don't want this second "common-mode" waveform to appear in our display. An example might be the case of observing heart waveforms that we pick up by leads connected to limbs of a patient or an animal. The desired waveform appears as a voltage between two incoming leads connected to the patient--but a second waveform, such as stray power-line pickup, often appears on both leads at the same time.

Perhaps the preceding example is as striking as any, but you can doubtless think of many of the other cases that can come up. In any event, the problem boils down to one of observing the difference between the voltage on a conductor A and the voltage on a second conductor B, while rejecting a voltage that is common to both conductors. A circuit that accomplishes this "common-mode" rejection is the differential amplifier of Fig. 7-10.

We note that the circuit is basically that of a push-pull plate-loaded amplifier. The principal feature of the circuit is that the common cathode resistor R_k is very large, while the plate-load resistors have only moderate resistance.

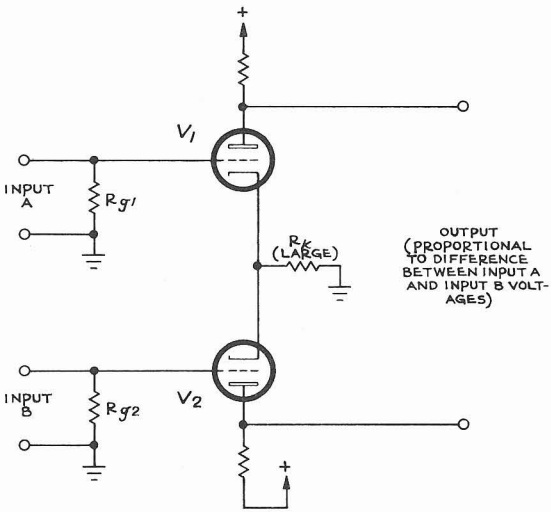

Fig. 7-10 A differential amplifier. The common cathode resistor R_k has a large value. Therefore an input-signal voltage impressed on either grid appears only slightly diminished at the common-cathode point. Consequently if we apply the same input-signal voltage to the grid of the second tube as well, only a very small plate-current change results in this second tube. Actually, with the same input-signal voltage applied to both grids, each tube strongly suppresses plate-current change in the other tube as just described. Therefore the differential amplifier of Fig. 7-10 strongly suppresses similar input signals applied to both grids (common-mode rejection). But if the two grid-input signals differ in any respect, this circuit delivers an amplified form of the voltage difference between the two input signals.

Suppose we apply the same input signal to the grids of V_1 and V_2. The cathode currents of the two tubes then change by the same amount. Since R_k is large, the signal-voltage drop across R_k caused by the current change in V_1 alone is large. this signal voltage across R_k reaches the cathode of V_2. This V_2 cathode-input signal has a polarity such as to oppose the current change in V_2 that would result from the common-input signal at the grids of V_1 and V_2. Thus, with similar signals applied to the grids of V_1 and V_2, the V_2 plate currents change only very slightly.

Similarly, with the same signal applied to the two grids, the cathode signal applied to V_1 as a result of a current change in V_2 opposes the effect in V_2 caused by the common grid-input signal. We see, then, that the overall gain of the stage for a common grid-input signal is very small.

Now suppose that the signals applied to the two grids are different. The current change in V_1 resulting from its grid-input signal still causes a cathode-input signal to be applied to V_2. But the grid-input signal to V_2 has, in general, a different value (and often even a different polarity) from that of the V_2 cathode-input signal applied by V_1. Therefore the total plate-current effect of the V_2 grid-input and cathode-input signals is proportional to the difference between the V_2 grid-input signal and cathode-input signal. Consequently, an output signal appears at the plate of V_2. By reversing the positions of V_1 and V_2 in this discussion, we see that an output signal also appears at the plate of V_1. Thus we have an amplifier that responds well to two differing input signals--but that produces only a very small output, if any, when the same signals are applied to the two grids. That is, the amplifier has the feature of "common-mode rejection."

We measure the common-mode rejection of the amplifier in terms of the ratio of the gain of the amplifier for different input signals to the gain for a common input signal. Common-mode rejection is not likely ever to be perfect--that is, there is likely to be at least a very small output signal for a common input signal. The reason lies in minor unbalances that unavoidably exist in tubes, circuit capacitances, etc.

To improve common-mode rejection, we balance the gains of the two tubes by adjusting the voltages applied to tube elements. A control that allows us to make this balancing adjustment is called a DIFFERENTIAL BAL control.

In some differential amplifiers we balance the shunt capacitances of certain parts of the circuit to improve common-mode rejection for rapidly changing signals.

Chapter 8

DELAY LINES AND DISTRIBUTED AMPLIFIERS

Let us now consider the delay lines used in oscilloscopes, and an amplifier arrangement that operates on some of the principles involved in delay lines.

8-1 Need for delay lines. Figure 8-1 shows a simplified block diagram of an oscilloscope. We feed the waveform we want to observe into the vertical-amplifier input. For the time being, assume that we apply the output of the vertical amplifier directly to the vertical-deflection plates of the cathode-ray tube. The output signal from the vertical amplifier, then, produces a vertical deflection of the cathode-ray-tube spot that is proportional to the amplitude of the observed waveform.

Suppose the displayed waveform is recurrent. Then, to stabilize the display, we need to start the horizontal movement of the cathode-ray-tube spot at some given point on the observed waveform. The device that starts the horizontal trace is called a trigger. And we can use the output signal of the vertical amplifier to actuate the trigger. The trigger produces an output waveform when the observed signal goes through some selected point on its waveform. The trigger-output waveform actuates the horizontal time-base generator (sweep generator) to start a horizontal sweep of the cathode-ray-tube spot. Thus each horizontal trace starts when the observed signal goes through the selected point on its waveform. In this way we are able to see a stable display of the observed waveform.

But it takes a measurable time for the trigger to start the horizontal sweep. This time interval, as shown as interval P in Fig. 8-1, is of the order of 0.1 microsecond. Furthermore, the time-base generator also generates the unblanking waveform (described later in Chap. 11) that turns on the cathode-ray-tube beam--so that there isn't even any spot on the screen until the unavoidable delay interval P has elapsed in actuating the time-base generator. Thus, there is a waiting interval P while the time-base generator gets the horizontal sweep started and gets the cathode-ray-tube spot unblanked. And during this wait the early part of the displayed waveform (its leading edge) might be partly or entirely over with--so that we would not observe the leading edge of the screen.

To make it possible to see the entire displayed waveform, including the leading edge, we introduce a delay of about 0.25 microsecond (interval Q in Fig. 8-1) between the vertical-amplifier output and the cathode-ray-tube vertical-deflection plates. This delay takes the form of a delay line, an actual or simulated transmission line. The delay line holds back, or delays, the displayed waveform from the vertical-deflection plates until the time-base generator has time to get the horizontal sweep started and to get the cathode-ray-tube beam unblanked. Thus we get a chance to see the leading edge of the displayed waveform. We can summarize the operation as follows:

1. The vertical amplifier transmits the waveform to be displayed to the trigger.

2. The trigger actuates the time-base generator.

3. The time-base generator starts the horizontal sweep and unblanks the cathode-ray-tube. Steps 2 and 3 require a total of about 0.1 microsecond.

4. The waveform to be displayed, after a delay of about 0.25 microsecond in the delay line, reaches the vertical-deflection plates.

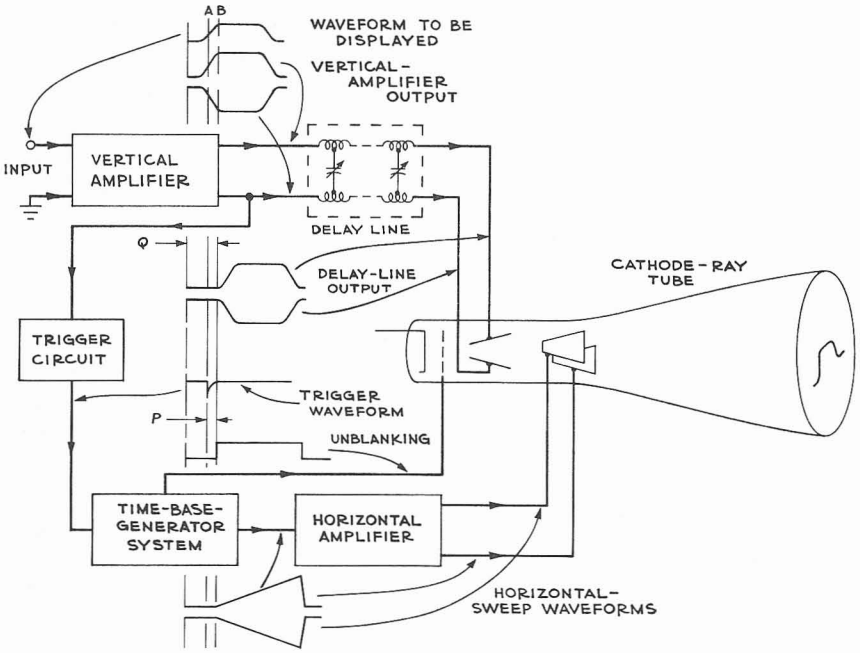

Fig. 8-1 Illustrating the need for a delay line. A vertical-signal sample from the vertical amplifier actuates the trigger circuit at instant A, so that the trigger circuit delivers the negative trigger spike shown. This trigger spike actuates the time-base-generator system, which supplies the unblanking pulse to make the cathode-ray-tube spot visible. At the same time, the time-base-generator system supplies the ramp horizontal-sweep waveforms shown, to deflect the spot linearly from left to right across the screen. But these unblanking and horizontal-sweep responses to the trigger require a measurable interval *P* to get started, as shown. (The interval *P* is usually of the order of 0.1 microsecond.) Thus, without the delay line, we would be able to see only that part of the displayed waveform that follows instant *B* in the topmost waveform. To let us see the leading edge of the displayed waveform as well, we include the delay line. The delay line introduces a vertical-signal delay *Q*, as shown. (The interval *Q* is typically about 0.25 microsecond.) Thus the displayed vertical waveform doesn't reach the cathode-ray-tube vertical-deflection plates until both the unblanking and the horizontal-sweep waveforms are well started.

In short--the purpose of the delay line is to allow us to see the leading edge of the displayed waveform.

8-2 Delay-line characteristics. a. Physical size. It is, of course, important that the delay line should not be unduly bulky, so that the instrument that includes the delay line will have a reasonable size.

b. Characteristic impedance. A delay line has a characteristic impedance (surge impedance). Perhaps as good a way as any to acquire the concept of characteristic impedance is to think of the characteristic impedance as that impedance which, when connected across the output terminals of the delay line, is duplicated at the input terminals. Suppose, for example, that a certain delay line has a characteristic impedance of 1,000 ohms. If we connect an impedance of 1,000 ohms across the output terminals of the line, then the impedance at the input terminals of the line is 1,000 ohms. But if we connect to the output terminals some impedance other than 1,000 ohms--say, 500 ohms--then the impedance at the input terminals is generally neither 500 ohms nor 1,000 ohms, but some other value.

If the delay line is a simple parallel-wire or coaxial transmission line, then we can figure the characteristic impedance Z_c by the formula

$$Z_c = \sqrt{L/C} \qquad \text{Eq. (8-1)}$$

In making a line, we control L and C by choosing the diameters and the spacing of the conductors. For best operation of the vertical amplifiers and the cathode-ray tubes in most oscilloscopes, we make the characteristic impedance of the delay line rather large--of the order of 1,000 ohms.

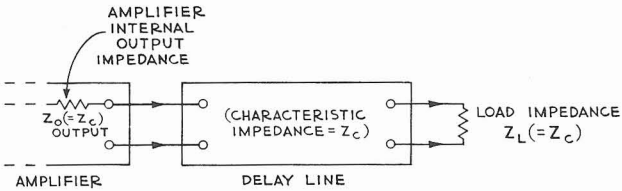

Fig. 8-2 If our problem were to transmit the greatest power from the amplifier output, through the delay line, and into the load impedance, then we should make both the load impedance Z_L and the amplifier internal output impedance Z_0 equal to the delay-line characteristic impedance Z_c.

c. Possible discontinuities. The delay line should have a characteristic impedance that is constant throughout the length of the line. If, at some point along the line, the characteristic impedance differs from that of the rest of the line, then we say there is a discontinuity at that point. In a parallel-wire or coaxial cable, a discontinuity might be caused by a change in the spacing between the conductors. A signal traveling along the line is partially reflected at a discontinuity--that is, a part of the signal energy is retransmitted in the reverse direction along the line. As we shall see, these reflections distort the displayed waveform--so we want to avoid discontinuities.

8-3 Terminations at ends of delay line. Figure 8-2 shows an arrangement where an amplifier transmits power through a transmission line to a load.

As you know, the greatest power reaches the load when we make the amplifier output impedance and the load impedance both equal to the line characteristic impedance Z_c.

But in an oscilloscope our problem is to apply a signal voltage to the vertical-deflection plates of the cathode-ray tube. This problem differs somewhat from the problem of getting maximum power transfer. To get the greatest signal voltage between the vertical-deflection plates, we often (1) terminate one end of the delay line with an impedance equal to the characteristic impedance Z_c of the line, and (2) connect across the other end of the line an impedance (either the amplifier output impedance or the load) that is very large--as close as possible to an open circuit, Figure 8-3 shows a case where the amplifier output impedance is very large and where we terminate the deflection-plate end of the line with an impedance equal to Z_c. Fig. 8-4 shows a case where the amplifier output impedance is equal to Z_c and where we leave the deflection-plate end of the line unterminated except for the deflection plates themselves. In either case, it turns out that the signal voltage at the deflection plates is essentially twice the voltage we get when we terminate both ends of the line with impedances equal to Z_c. This voltage increase is equivalent to a 6-decibel increase in voltage gain.

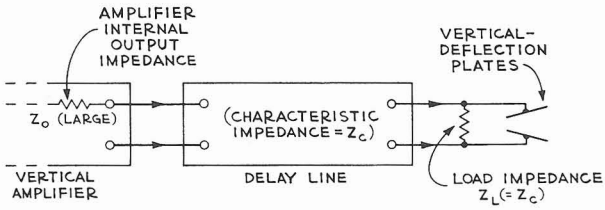

Fig. 8-3 In an oscilloscope, our problem is not to transmit the greatest possible power from the vertical-amplifier output, through the delay line, and to the vertical-deflection plates. Rather, we want to apply the greatest possible signal voltage between the vertical-deflection plates. We find that the greatest signal voltage appears between the vertical-deflection plates if we terminate one end of the delay line in an impedance equal to the delay-line characteristic impedance Z_c but leave the other end of the delay line connected to a very large impedance (theoretically an open circuit). In this way we can make the signal voltage at the vertical-deflection plates twice as great as it would be with both ends of the delay line terminated in impedances Z_c equal to the delay-line characteristic impedance (Fig. 8-2). This doubling of the signal voltage is equivalent to a 6-decibel increase in the vertical-deflection-system voltage gain. In Fig. 8-3, we achieve this result by driving the delay line from a high-impedance amplifier-output circuit and terminating the delay line at the vertical-deflection plates with an impedance Z_c.

8-4 Effect of a discontinuity. Suppose an impedance discontinuity exists in the delay line in an oscilloscope. Let's consider what this discontinuity does to the display.

First, assume that the vertical amplifier in our oscilloscope has a large internal output impedance, and that the deflection-plate end of the delay line is terminated with an impedance equal to the delay-line characteristic impedance Z_c (Fig. 8-3). Suppose we apply a step function to the input

of the vertical amplifier. The vertical amplifier applies the step function (Fig. 8-5a) to the delay line. After a delay of 0.25 microsecond, the step function arrives at the output end of the delay line (Fig. 8-5b) and is applied to the vertical-deflection plates, so that we see the step function displayed on the cathode-ray-tube screen. The line-termination impedance dissipates the energy of the step-function signal.

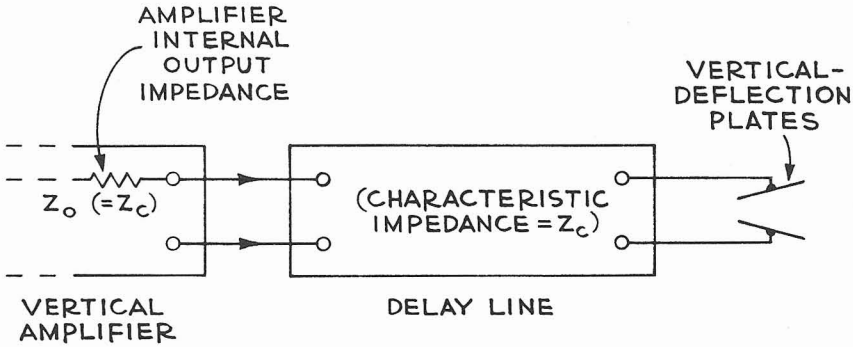

Fig. 8-4 Here, as in Fig. 8-3, we terminate one end of the delay line in an impedance Z_c equal to the delay-line characteristic impedance; and we leave the other end of the delay line connected to a relatively large impedance. In Fig. 8-4, however, the amplifier-output-circuit impedance Z_o equals the delay-line characteristic impedance Z_c, while we connect the other end of the delay line to the vertical-deflection plates only.

Now suppose that there is a small impedance discontinuity at some point along the delay line. Suppose, for example, that the waveform to be displayed reaches the discontinuity 0.2 microsecond after we apply the step waveform to the delay-line input terminals. When the leading edge of the step function reaches the discontinuity, some of the signal energy of the leading edge is reflected. This reflected energy appears as a brief pulse (Fig. 8-5c) that travels backward along the line. (The reflected-signal energy subtracts from the leading edge of the main forward-going signal. Therefore the steepness of the leading edge that is actually displayed is slightly reduced as suggested in Fig. 8-5b.)

The reflected waveform of Fig. 8-5c moves backward along the delay line toward the amplifier. The reflected wave reaches the amplifier output terminals 0.2 microsecond after it was reflected--that is, 0.4 microsecond after we applied the original step function to the delay line. At the amplifier-output terminals, the reflected wave meets an abrupt discontinuity in the form of the amplifier high-impedance output circuit. Thus the reflected waveform is re-reflected (Fig. 8-5d) along the delay line toward the cathode-ray tube. The re-reflected wave arrives at the vertical-deflection plates 0.25 microsecond after the re-reflection at the amplifier (Fig. 8-5e). At the vertical-deflection plates, the re-reflected wave distorts the display (point B, Fig. 8-5b).

Now as a second case, suppose the vertical-amplifier internal output impedance equals the delay-line characteristic impedance Z_c, and that we do not connect a termination across the deflection-plate end of the line (Fig. 8-4). If the vertical amplifier applies a step function (Fig. 8-6a) to the delay line, then after a delay of 0.25 microsecond the step function

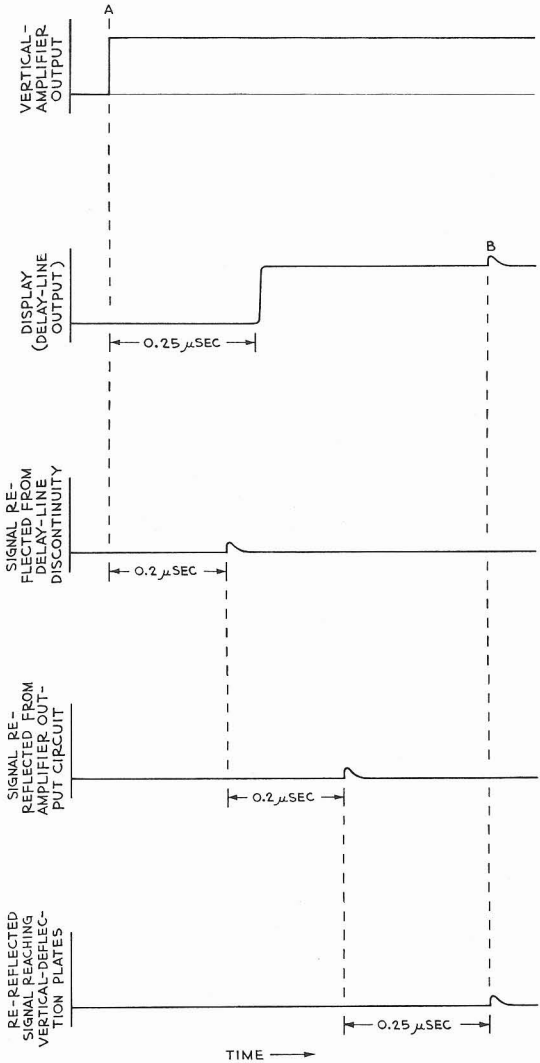

Fig. 8-5 Effect of a delay-line discontinuity in the circuit of Fig. 8-3. Here we drive the delay line from an amplifier having a high-impedance output circuit. And we load the deflection-plate end of the delay line with an external terminating impedance that equals the delay-line characteristic impedance Z_c. But suppose the delay line includes a defect called a discontinuity--where the characteristic impedance differs from the rated characteristic impedance Z_c of the rest of the line. Such a discontinuity can result, for example, from a misadjusted shunt capacitor in the delay line. Discontinuities reflect signal energy. The result appears as "bumps" and other distortions in the display. As explained in the text, a discontinuity near the deflection-plate end of the delay line of Fig. 8-3 causes a bump to appear rather late along the flat top of a displayed step waveform (Fig. 8-5b). (Correspondingly, a discontinuity near the amplifier end of the delay line causes a bump just after the leading edge of a displayed step waveform.)

arrives at the output of the delay line (Fig. 8-6b) and is applied to the deflection plates. Thus we see the step function displayed on the oscilloscope screen.

Since we didn't provide a terminating impedance at the deflection-plate end of the line, the energy of the step function is now almost totally reflected backward along the line. When this energy reaches the amplifier-output terminals, the amplifier-output impedance dissipates the energy.

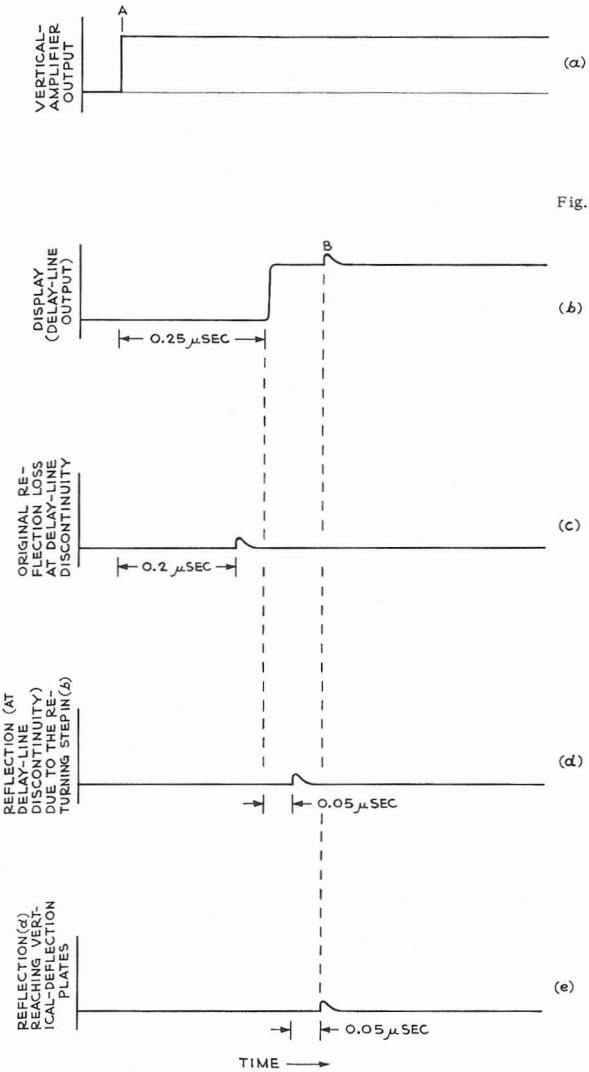

Fig. 8-6 Effect of a delay-line discontinuity in the circuit of Fig. 8-4. Here we drive the delay line from an amplifier whose output-circuit impedance equals the delay-line characteristic impedance Z_c. Then we don't need the terminating impedance at the deflection-plate end of the delay line. As explained in the text, a delay-line-capacitor misadjustment or other discontinuity near the deflection-plate end of the delay line of Fig. 8-4 causes a bump just after the leading edge of a displayed step waveform (Fig. 8-6b). Correspondingly, a discontinuity near the amplifier end of the delay line causes a bump rather late along the flat top of a displayed step waveform. In Figs. 8-5 and 8-6, contrast the positions of the displayed bumps caused by a given discontinuity near the deflection-plate end of the delay line for the circuits of Figs. 8-3 and 8-4.)

Now suppose that there is a small impedance discontinuity at some point along the delay line. Suppose, for example, that the waveform to be displayed reaches the discontinuity 0.2 microsecond after we apply the step waveform to the delay-line input terminals. Some of the energy of the leading edge

appears as a brief reflected pulse (Fig. 8-6c) that travels backward along the line. (The reflected-signal energy subtracts from the energy of the leading edge of the main forward-going signal. Therefore the steepness of the leading edge that is actually displayed is slightly reduced as suggested in Fig. 8-6b.) The amplifier-output impedance absorbs the energy of the reflected pulse (Fig. 8-6c) so that this reflected pulse doesn't reappear in the display.

We recall, however, that after the main forward-going signal reaches the deflection plates, this signal is almost totally reflected backward along the line. At the discontinuity, a fraction of the energy of this signal is re-reflected forward along the line in the form of a brief pulse (Fig. 8-6d). This re-reflected wave arrives at the vertical-deflection plates 0.05 microsecond after the re-reflection at the discontinuity (Fig. 8-6e). At the vertical-deflection plates, the re-reflected wave distorts the display (point *B*, Fig. 8-6).

We see that the over-all effects of a discontinuity include a slight increase in the risetime of the displayed leading edge and the appearance of a bump at some point on the flat top of a reproduced step function. The effects are essentially the same, regardless of whether the line is terminated at the amplifier end or at the deflection-plate end. One difference: If, for example, the discontinuity is near the deflection-plate end of the line the bump appears in the right-hand end of the display when the line impedance is matched by a termination at the deflection plates. But the same discontinuity causes a bump near the left-hand end of the display when the line impedance is matched by the amplifier-output impedance.

8-5 Kinds of delay lines. a. Simple coaxial cables. One form of delay line is simply a coiled-up length of ordinary coaxial cable that is so long that the waveform to be displayed needs about 0.25 microsecond to get through the cable. For ordinary kinds of coaxial cable, the required length of cable is of the order of 150 feet. The size of such a roll of cable is undesirable.

The resistance of the center conductor of the coaxial cable tends to affect the transient response of the cable, so that the risetime is sometimes longer than we want it to be. (In a somewhat rough-and-ready way we might say that the center-conductor resistance, in conjunction with the shunt capacitance of the cable, forms an *RC* system whose risetime might be greater than the risetime we want.) To reduce the center-conductor resistance, we sometimes use coaxial cable whose diameter is considerably larger than would be indicated by current- or voltage-handling requirements.

We have already noted that for many oscilloscope requirements the characteristic impedance of the delay line should be rather high--of the order of 1,000 ohms. But the characteristic impedance of common coaxial cables is usually not more than about 125 ohms. We have to take this low characteristic impedance into account when we consider ordinary coaxial cable for delay-line applications.

We use coaxial-cable delay lines in certain oscilloscopes intended to display rapidly changing signals. To keep the transient response excellent,

we use cables whose diameters are quite large. In some oscilloscopes that use distributed amplifiers (Sec. 8-6), the distributed amplifiers provide much of the required delay. We may then use a coil of coaxial cable for the rest of the delay.

b. Special coaxial cables. Some delay lines use an inner conductor that is a continuous coil of wire. Sometimes this inner-conductor coil is wound on a magnetic core.

When we use a continuous coil as the inner conductor, we increase the characteristic impedance of the cable--often to values from 1,000 to 2,000 ohms. We also increase the delay for a given length of cable so that we need only a reasonable length of cable.

c. Delay lines composed of cascade LC networks. In a coaxial cable the series inductance L and the shunt capacitance C are continuously distributed throughout the length of the line. But it is also possible to break up the inductance and the capacitance into separate "lumped" portions, as shown in Fig. 8-7. The physical appearance of such a delay line is shown in Fig. 8-8.

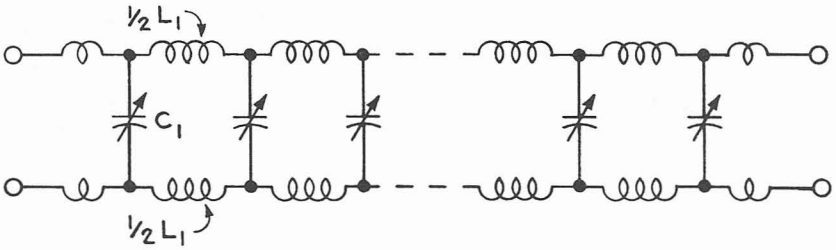

Fig. 8-7 A delay line composed of cascade LC networks (often called a lumped-parameter delay line). In this push-pull form of the delay line, the series inductance L_1 of each section is equally divided between the two sides of the delay line. The characteristic impedance of this delay line is $Z_c = \sqrt{L_1/C_1}$.

We shall refer to the series inductance of each delay-line section as L_1 and the shunt capacitance of each section as C_1. In a push-pull (balanced-to-ground) delay line, we divide the inductance L_1 of each section equally between the two sides of the delay line. (To achieve the operating characteristics we want, we might include some mutual inductance between the inductances in adjoining sections. To provide this mutual inductance we can construct the actual delay line with tapped inductors, and with the shunt capacitors connected to the inductor taps rather than to the inductor ends.)

We can make the "characteristic" impedance of such a delay line quite large if we use comparatively large values of L_1 and small values of C_1. And a rather large characteristic impedance is of course just what we want in many cases.

The delay time produced by each section of line increases when we increase either L_1 or C_1. Thus if we use comparatively large values of L_1 and C_1 we get our required 0.25-microsecond delay with only a few sections.

But we have to think of the risetime of the delay line, too. And it turns out that, for a given short risetime, we have to break the line up into a comparatively large number of sections--each producing a small amount of delay.*

If we make the shunt capacitors C_1 adjustable, we can observe the square-wave response and carefully adjust each shunt capacitor so that the impedance of each section of line is the same as that of all other sections. In this way we keep reflections at a minimum--so that a square-wave display, for example, is free of the bumps we discussed in Sec. 8-4. Further-

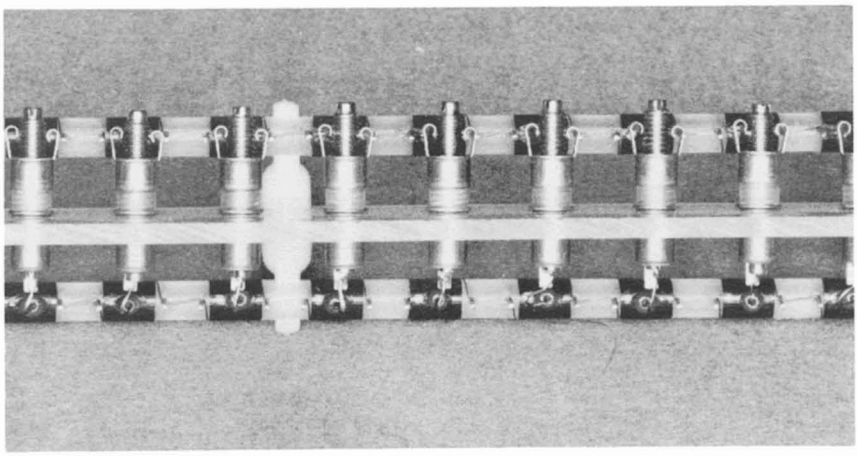

Fig. 8-8 Physical appearance of a typical delay line composed of cascade *LC* networks (Fig. 8-7).

* Our purpose here, of course, is not to go into detailed design problems. But we can mention that the characteristic impedance is

$$Z_c = \sqrt{L_1/C_1} \qquad \text{Eq. (8-1)}$$

To keep the risetime down to a given desired value T_R for a given total delay time T_D, we have to break the line up into a number of sections given by

$$n = 1.1\left(\sqrt{T_D/T_R}\right)^3 \qquad \text{Eq. (8-2)}$$

The delay produced by each section is

$$T_{D1} = \sqrt{L_1/C_1} \qquad \text{Eq. (8-3)}$$

Delay lines of the type discussed here are often called <u>lumped-parameter</u> lines.

more, we can adjust the delay line so that the over-all response of the vertical amplifier and the delay line together is significantly better than as if we adjusted them independently.

It is possible for a delay line to get out of adjustment after the oscilloscope has left the factory--particularly if the oscilloscope has been subjected to rough handling, extreme temperatures, etc.

Then the display of a square wave (from a generator suitable for your type of oscilloscope) might show jagged bumps along the flat top. Furthermore, the first 1/2-microsecond region of the flat top might tilt upward or downward. And the corner might be rounded; or there might be overshoot at the corner. Sometimes there is ringing along the entire flat top. (Note, however, that some of these defects can arise from troubles other than delay-line difficulties. See, for example, Secs. 4-2 to 4-7, 5-4 to 5-8, and 5-16.) You can adjust the delay line in the field--if you observe the following requirements.

IMPORTANT

DON'T attempt to adjust the delay-line capacitors unless you have:

1. Adequate instruments and tools as specified for your particular type of oscilloscope.

2. Factory procedures for adjusting the delay line in your particular type of oscilloscope.

3. Either experience, factory training, or adequate time.

Without these three requisites you will almost certainly leave the delay line in a worse state of adjustment than when you started.

d. Specially braided delay line. It is very difficult to arrange a delay line composed of cascaded *LC* sections that has adequate delay if the risetime is to be shorter than about 10 or 12 nanoseconds. Copper losses and other factors tend to lengthen the risetime in a delay line that has adequate delay.

It turns out that we can make a delay line with a short risetime and adequate delay if we provide magnetic coupling between the two sides of the delay line. Figure 8-9 shows such an arrangement. Here each side of the line consists of a conductor that is wound spirally on a flexible insulating core. Special machinery braids the two conductors onto the same core. The two conductors are spiraled in opposite directions. The finished delay line is embedded in a plastic panel as shown in Fig. 8-10.

With such a delay line we can provide suitable series inductance in each side of the line, and sufficient magnetic coupling between the two sides of the line. The resulting shunt-capacitance values make the delay-line

impedance rather low. Therefore we feed each side of the delay line from a source of, say, 93 ohms.

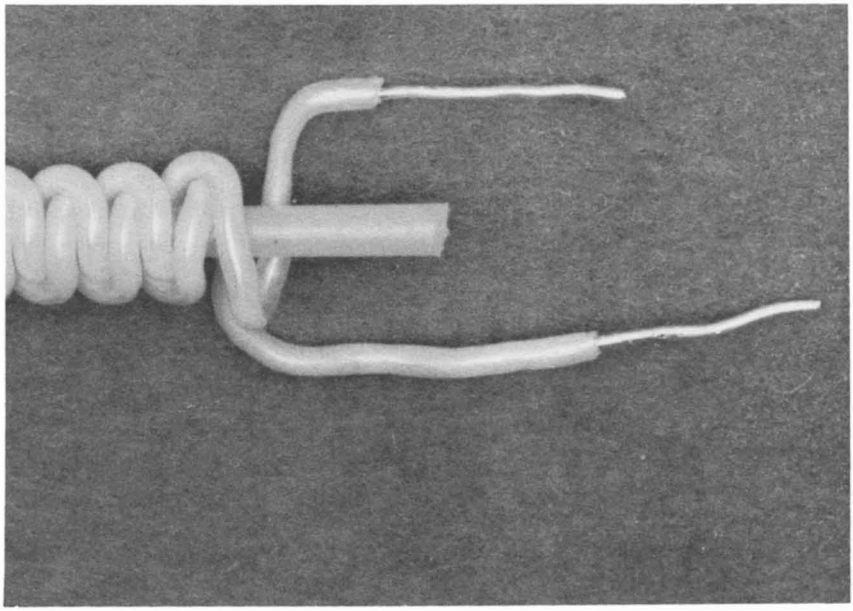

Fig. 8-9 For very short risetimes, the delay line composed of cascade *LC* networks (Fig. 8-7 and 8-8) is impractical. In such cases we can use the specially-braided delay line shown here. For a short risetime combined with adequate delay, we need mutual magnetic coupling between the two sides of the line. To provide this coupling, special machinery braids the two conductors spirally in opposite directions on the insulating core.

8-6 Signal-current requirements. The vertical-deflection plates of a cathode-ray tube present an unavoidable shunt capacitance to the vertical-deflection system of an oscilloscope. For a short risetime, we have to change the voltage across this small shunt capacitance very rapidly. As a result, we have to supply a large charging current, even though the shunt capacitance is relatively small.

For example, suppose we can cover the full vertical graticule if we apply a peak-to-peak signal of, say, 60 volts to the vertical-deflection plates. And suppose we want the vertical-deflection-system risetime to be 6 nanoseconds (6×10^{-9} second). Then if we apply a theoretically perfect step function to the vertical-amplifier input, the signal-voltage waveform that reaches the vertical-deflection plates must be about like that of Fig. 8-11. Let us see how much charging current the vertical amplifier must supply to the vertical-deflection plates.

We note that the waveform of Fig. 8-11 rises through a range of 48 volts during an interval of 6 nanoseconds. Thus the voltage at the vertical-deflection plates rises at an average rate of $48 \div (6 \times 10^{-9}) = 8 \times 10^{9}$ volts per second. In other words, during the rising part of the voltage waveform at the vertical-deflection plates, dv/dt has an average value of 8×10^{9} volts per second.

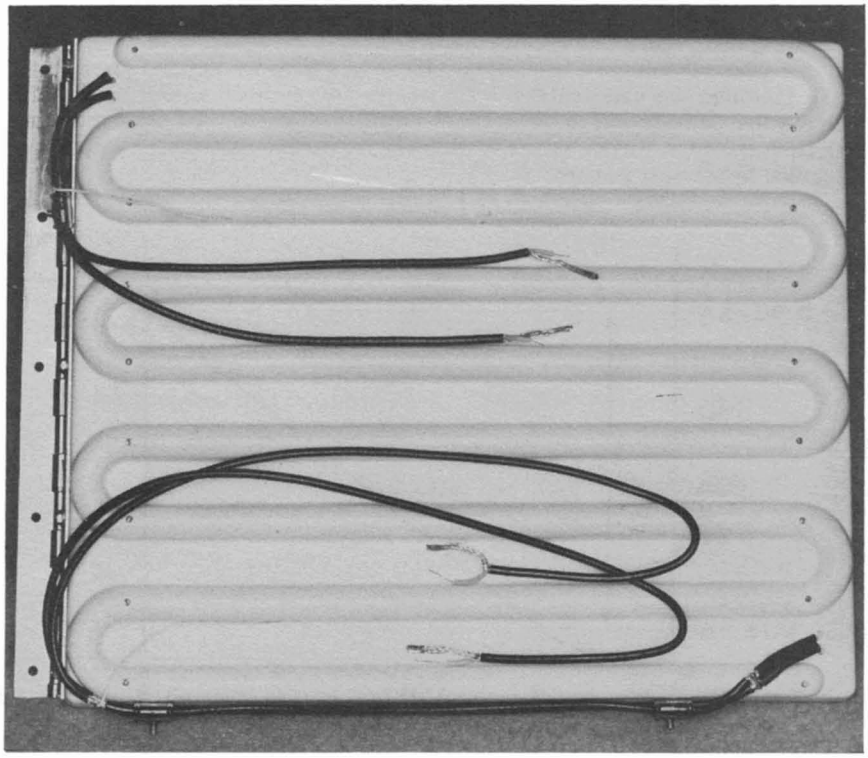

Fig. 8-10 In the finished form of the specially-braided delay line of Fig. 8-9, a molded plastic panel incloses the delay line as shown here.

Suppose that the effective capacitance between the vertical-deflection plates is 5 picofarads (5×10^{-12} farad). In Sec. 1-14 we learned that the current in a capacitance is

$$i = C \frac{dv}{dt} \qquad \text{Eq. (1-4)}$$

We note that $C = 5 \times 10^{-12}$ farad and that dv/dt has an average value of 8×10^{9} volts per second. Therefore, by the above formula, the average current required is $(5 \times 10^{-12}) \times (8 \times 10^{9}) = 40 \times 10^{-3}$ ampere, or 40 milliamperes.

Now, it would be difficult to find an amplifier tube of moderate size that can supply a signal current of 40 milliamperes. In particular, it would

be difficult to find such a tube that also has only small interelectrode capacitances. (We must keep in mind that the amplifier has to supply charging current not only for the cathode-ray-tube vertical-deflection plates, but also for its own plate-to-ground capacitance.) Theoretically, we could make more signal current available if we connected two or more amplifier tubes in parallel. However, each time we add a tube in parallel we also add the undesirable shunt plate-to-ground capacitance of that tube.

We find, then, that even with the most favorable selection of tube types and with the best circuits we can design, there is a broadly-defined lower limit to the risetime we can achieve when we use conventional amplifier circuits to drive the cathode-ray-tube vertical-deflection plates. To overcome this limitation and to achieve shorter risetimes, we use the distributed amplifiers described in the next section.

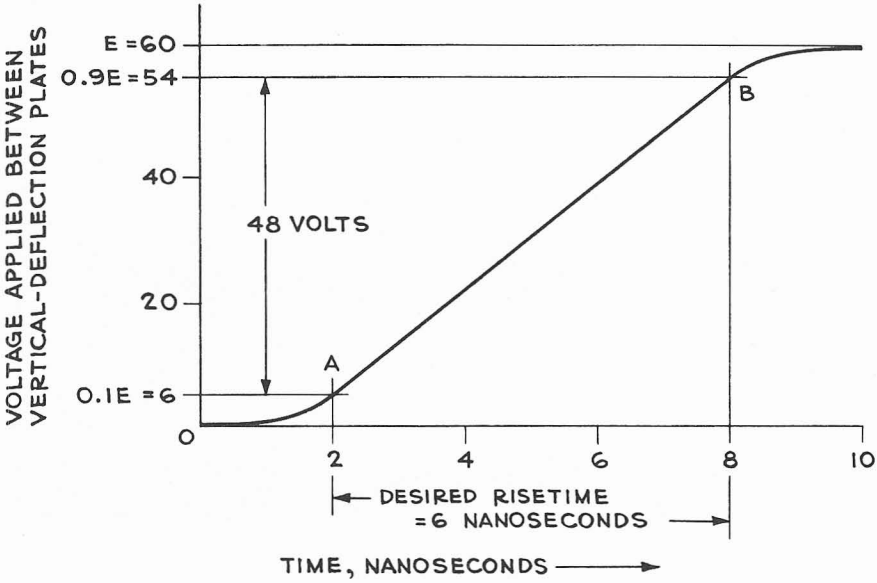

Fig. 8-11 Showing why we need a large signal current to charge the vertical-deflection-plate capacitance in a short-risetime oscilloscope. As an example, suppose we want to be able to display waveforms whose risetimes are as short as 6 nanoseconds (6×10^{-9} second). For full vertical deflection, we need to apply to the deflection plates a signal whose amplitude is about 60 volts, as shown here. Thus during the interval AB the deflection-plate voltage rises at a rate of $48/(6 \times 10^{-9}) = 8 \times 10^{9}$ volts per second. Therefore during interval AB a deflection-plate capacitance of 5 picofarads ($= 5 \times 10^{-12}$ farad) requires a charging current of $(8 \times 10^{9})\ (5 \times 10^{-12}) = 0.04$ ampere $= 40$ milliamperes. A conventional amplifier tube that can supply such a signal current adds appreciable further capacitance. Therefore we resort to the distributed amplifier of Fig. 8-12.

8-7 Distributed amplifiers. Figure 8-12 shows the basic arrangement of a distributed amplifier (transmission-line amplifier). Distributed amplifiers in oscilloscopes are usually push-pull. For simplicity, Fig. 8-12 shows a single-ended amplifier. The circuit includes, in effect, a delay line (called a grid line) where the series inductances are L_{g1}, L_{g2}, etc., and

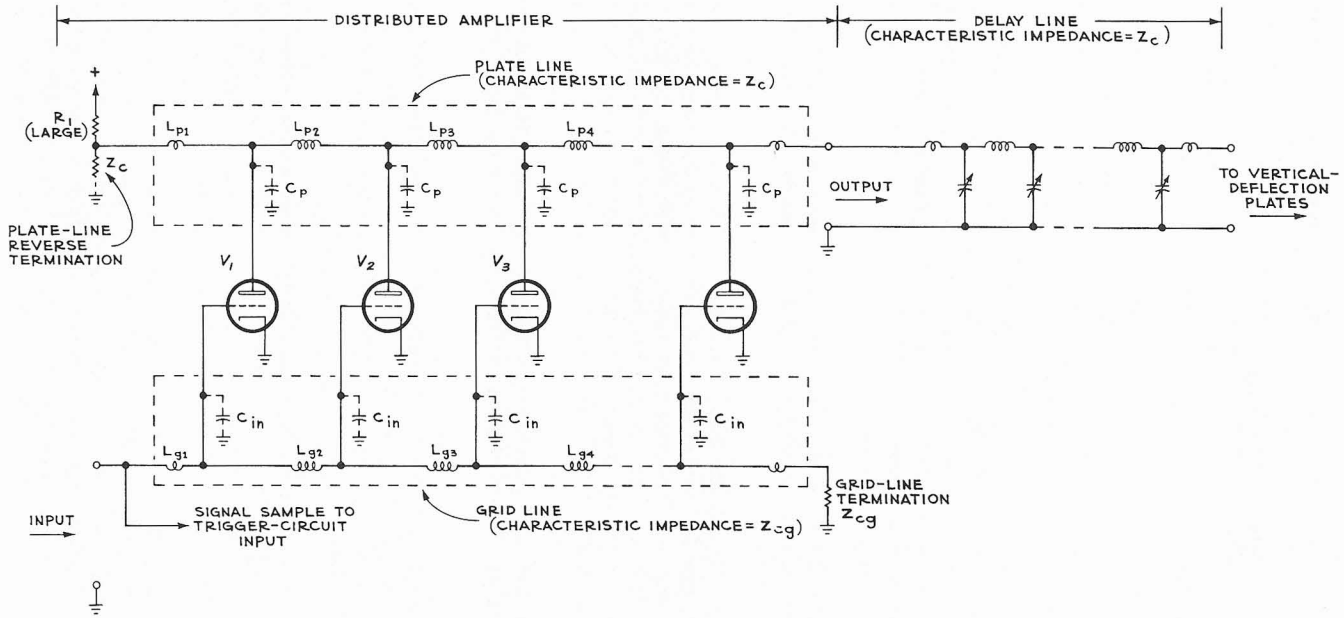

Fig. 8-12 A basic form of distributed amplifier. (For simplicity we show here a single-ended amplifier and delay line instead of the push-pull forms common in oscilloscopes.) The input signal travels along the grid line at a fixed rate, driving the various grids in succession with specific delay intervals between. The resulting plate-circuit output-signal currents travel along the plate line at the same rate. Thus each succeeding plate adds signal current in turn. In this way the distributed amplifier can supply a large signal-current demand such as that indicated in Fig. 8-11. But at any instant the signal appears at only one tube, so that only the capacitances associated with that one tube can affect the risetime. (In this circuit we use the amplifier in the arrangement of Fig. 8-4. Here we provide at the reverse end of the delay line a terminating impedance that matches the plate-line characteristic impedance Z_c. Thus the amplifier output-circuit impedance is also Z_c as required in Fig. 8-4.)

where the shunt capacitances are the effective grid-to-ground capacitances of tubes V_1, V_2, etc. There is also a second delay line (called the plate line) where the series inductances are L_{p1}, L_{p2}, etc., and where the shunt capacitances are the plate-to-ground capacitances of V_1, V_2, etc. We design these two lines in such a way that the time required by a signal to travel through one section of the grid line is equal to the time required by a signal to travel through one section of the plate line.

We apply the input signal to the grid of V_1. As a result, the plate current of V_1 changes. This plate-current change constitutes a signal that is transmitted along the plate line, arriving at the plate of V_2 just in time to add to the V_2 plate-current change that results from the signal voltage on the grid of V_2. Thus, if a given input signal causes a plate-current change of 1 milliampere in V_1, then the total plate signal current after the signals reach V_2 is 2 milliamperes; and after the signals reach V_3 the total plate signal current is 3 milliamperes, etc. The various tubes are actually neither in cascade nor in parallel. But as the input signal moves down the grid line, to the various tubes in turn, the corresponding total plate signal current increases in equal steps.

We note that, at any given time, the signal is present at only one tube. Therefore, at a given instant, only the capacitances associated with that one tube can affect the risetime.

As we have learned (Sec. 8-3), many oscilloscopes use delay lines that are not terminated at the deflection-plate end. In such cases we make the internal impedance of the vertical-amplifier output circuit match the delay-line characteristic impedance. Thus the reflected signal from the unterminated end of the delay line is totally absorbed in the internal impedance of the amplifier. This basic arrangement was shown in Fig. 8-4.

If the vertical amplifier is a distributed amplifier, we make the amplifier internal output impedance match the delay-line characteristic impedance in this way:

1. Since the plate line is in effect a delay line, we make its characteristic impedance the same as the characteristic impedance Z_c of the delay line. Then as far as the reflected signal is concerned, the plate line is simply an extension of the delay line.

2. We connect a "reverse-termination" impedance (whose value is also Z_c) across the plate line, as shown in Fig. 8-12. Thus, after the reflected signal moves backward along the delay line and the plate line, the reverse termination totally absorbs this reflected signal.

Figure 8-13 shows a practical vertical amplifier that includes a distributed-amplifier section. The input waveform for the push-pull plate-loaded-amplifier stage V1014-V1024 comes from a plug-in preamplifier. This V1014-V1024 amplifier drives a push-pull cascade cathode-follower arrangement using V1033 and V1043. The cathodes of V1033B and V1043B drive the distributed-amplifier grid line. At the remote end of the grid line, R1206 and R1216 in series terminate the grid line in its characteristic

impedance of 720 ohms so that reflected input signals do not travel back along the grid line. R1208 completes the dc cathode-current circuit for V1033B and V1043B.

The cathodes of V1033B and V1043B also drive two other amplifiers, as follows: (1) the beam-position-indicator amplifiers V1084A and V1084B that light or extinguish the neon lamps B1083 and B1087 as required, to show when the dc vertical-positioning voltages locate the trace above or below the graticule area; and (2) the trigger-pickoff amplifiers V1054 and V1064 to supply a vertical-signal sample to the trigger circuit as we studied in Fig. 8-1.*

In Fig. 8-13, capacitors C1104, C1204, etc., allow us to adjust the plate-line characteristic impedance to match the delay-line characteristic impedance Z_c without impedance discontinuities that would cause reflections in the plate line.

The plate-line characteristic impedance Z_c at a given frequency can include both resistive and reactive components. Even so, we must be sure that the reverse-termination impedance corresponds to this plate-line impedance Z_c so that the reverse termination completely absorbs reflected signals. At the same time, we must preserve the short risetime and the negligible overshoot inherent in the amplifier. To meet these requirements, we provide in Fig. 8-13 a reverse-termination network that is more complicated than the simple resistor indicated in Fig. 8-12. We can adjust L1071, L1073, and the reverse-termination capacitors of Fig. 8-13 for the best square-wave response and adequate vertical bandwidth, according to the instructions covering the oscilloscope type.

(The circuit of Fig. 8-13 includes a network to compensate for dc shift--Sec. 5-16. This network includes R1090, C1093, R1092, R1094, R1095, R1097, R1099, and R1091. If the dc level at either input terminal changes abruptly, this network feeds back a part of the resulting output dc-level variation. This feedback dc-level change reaches the opposite side of the push-pull system in a polarity that reinforces the desired vertical deflection of the cathode-ray-tube spot. But the long RC time constants in this dc-shift-compensation network allow this reinforcement to occur only about as fast as the desired deflection drops off because of dc shift in the tubes. And we can use R1091 to control the dc-feedback-signal amplitude. In this way we can reduce the overall dc shift essentially to zero.)

---

*Since the vertical signal requires an appreciable time to move through the distributed amplifier, we use the amplifier delay interval as a part of the total delay (about 0.25 microsecond) that is ordinarily required of the delay line. This arrangement requires that we tap off the vertical-signal sample that operates the trigger circuit <u>before</u> the vertical signal goes through the distributed amplifier. The arrangement in Fig. 8-13 meets this requirement.

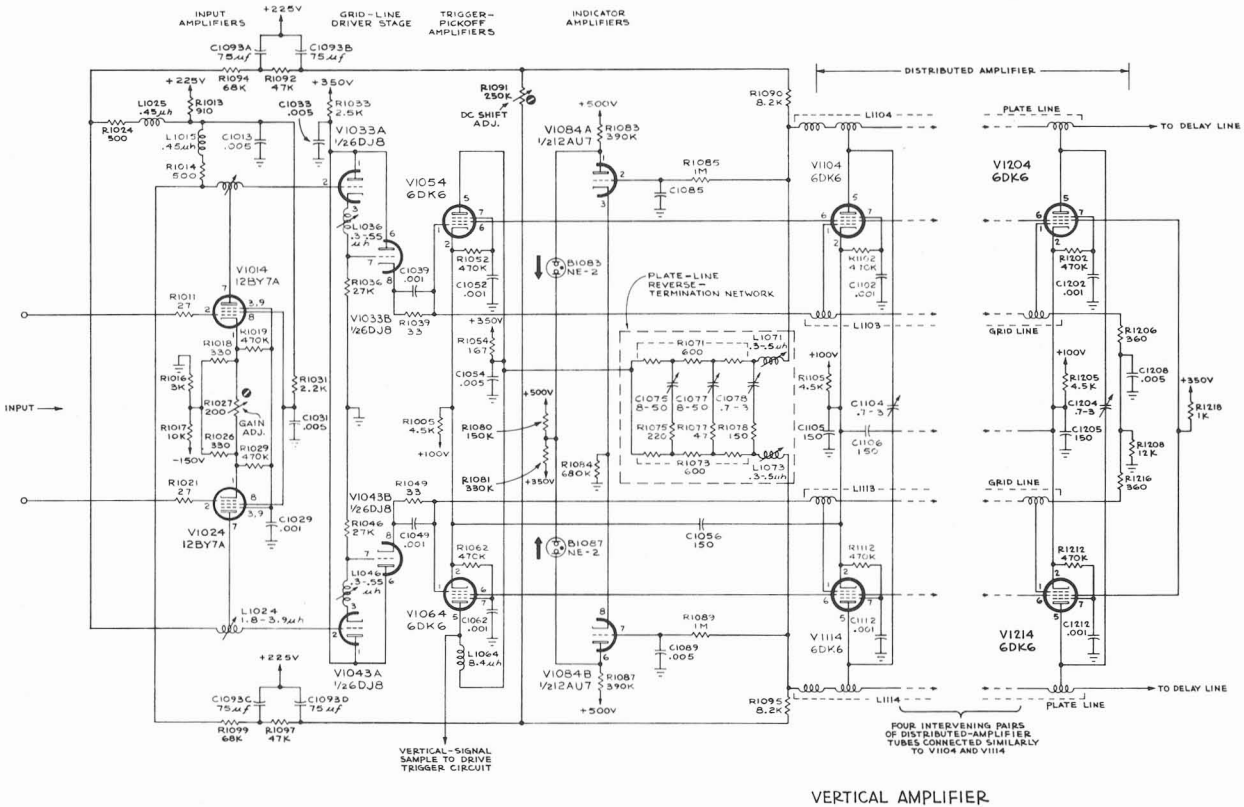

Fig. 8-13 A practical vertical amplifier including a distributed-amplifier circuit, as described in the text.

Chapter 9

TIME-BASE GENERATORS

When we use an oscilloscope, we very often want the display to show us how some varying quantity changes with time. Therefore the cathode-ray-tube spot should cover some fixed amount of horizontal distance during each unit of time. In other words, the cathode-ray-tube spot should ideally move at a constant horizontal speed during the entire horizontal motion of the spot across the screen. We say that a spot that moves in this manner is deflected linearly with respect to time.

Let's consider what voltage waveforms we have to apply to the horizontal-deflection plates of the cathode-ray tube to deflect the cathode-ray-tube spot horizontally in this desired linear manner. And let's take up some circuits that generate these required horizontal-deflection waveforms.

9-1 Required horizontal-deflection waveform. It turns out that, to deflect the cathode-ray-tube spot from left to right in a linear manner, we must:

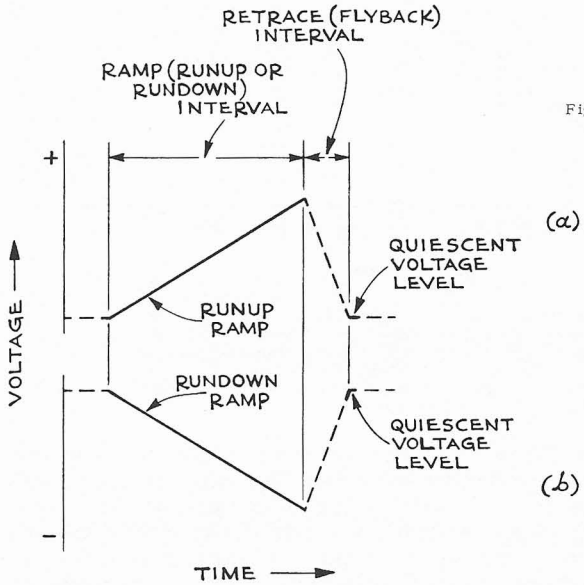

Fig. 9-1 Voltage waveforms needed to deflect the cathode-ray-tube spot horizontally at a desired constant rate (linear deflection). A time-base generator develops either a positive-going (runup) ramp as shown in diagram a, or a negative-going (rundown) ramp as shown in diagram b. The horizontal amplifier accepts either waveform a or waveform b and, in the amplifier push-pull output circuit, delivers both waveforms. For linear horizontal deflection we apply waveform a to the right-hand horizontal-deflection plate and waveform b to the left-hand plate.

1. Apply to the right-hand horizontal-deflection plate a positive-going ramp voltage like the solid-line part of Fig. 9-1a.

2. And apply to the left-hand horizontal-deflection plate a negative-going ramp voltage like the solid-line part of Fig. 9-1b.

We call the circuitry that develops these ramp waveforms a time-base generator or sweep generator. Actually, the time-base generator develops either the positive-going waveform of Fig. 9-1a or the negative-going waveform of Fig. 9-1b. We feed this waveform into a horizontal amplifier that includes a paraphase-amplifier circuit (Sec. 7-5). Thus the horizontal amplifier delivers two output waveforms--one waveform like Fig. 9-1a for the right-hand deflection plate, and another waveform like Fig. 9-1b for the left-hand deflection plate. For the time being, let's assume that the time-base generator itself develops the positive-going waveform of Fig. 9-1a. And assume that the paraphase amplifier provides the additional required negative-going waveform of Fig. 9-1b. It is, then, during the solid-line portion of Fig. 9-1a that the cathode-ray-tube spot moves in the forward direction--from left to right across the screen.

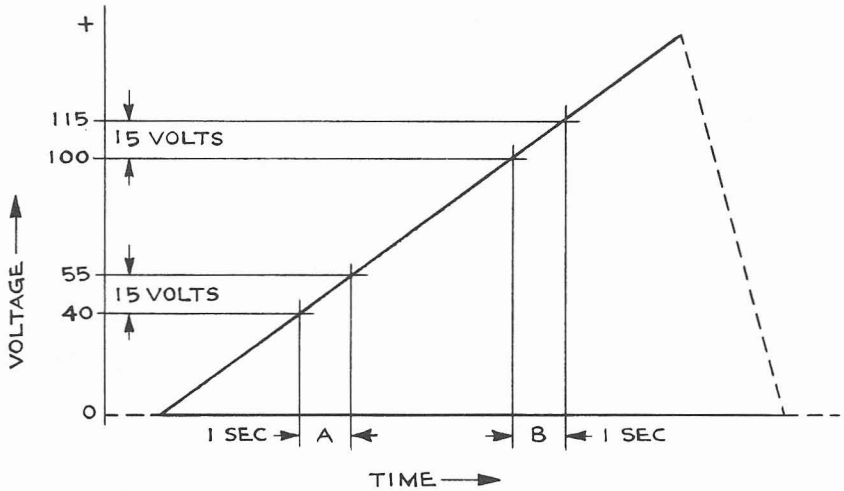

Fig. 9-2 Illustrating the idea of linearity that we require in a time-base generator output ramp-voltage waveform. If the ramp voltage changes by a given amount (say 15 volts) during a given time interval *A* (say, 1 second), then the voltage must also change by the same amount (15 volts) during any other equal (1-second) interval, such as interval *B*.

Suppose then we use the oscilloscope to observe a recurrent external waveform. Then the time-base generator in the oscilloscope develops a recurrent waveform that includes not only the solid-line part of Fig. 9-1a but also the broken-line portion as well. We call the solid-line portion of the waveform of Fig. 9-1a the runup portion. It is only during the runup portion of the sweep waveform (forward motion of the spot) that the unblanking waveform (Fig. 8-1) turns on the cathode-ray-tube beam so that the spot appears on the screen.

Let's study the runup portion of the waveform of Fig. 9-1a. The runup portion is shown in detail in Fig. 9-2. To deflect the cathode-ray-tube spot at a constant speed, we must make the runup portion (Fig. 9-2) linear. That is, the time-base generator must develop an output waveform whose

runup portion rises through some fixed number of volts during each succeeding unit of time. For example, if the runup portion rises through a range of 15 volts during a 1-second interval (such as interval A of Fig. 9-2), then the runup portion must also rise through an equal 15-volt range during any other 1-second interval (such as interval B of Fig. 9-2).

In the following sections, let's take up some time-base-generator circuits that are intended to develop the required linear voltage changes we just mentioned.

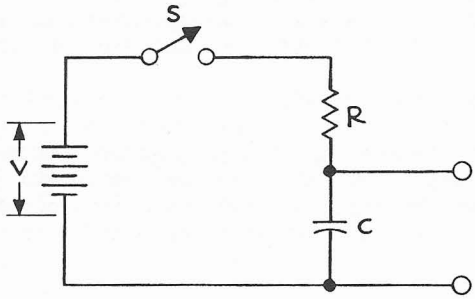

Fig. 9-3 Most time-base generators are refinements of the basic RC circuit shown here. When we close the switch S, a charging current through R raises the capacitor voltage toward the battery voltage.

9-2 A basic time-base generator. For the output waveform of a time-base generator, we commonly use the changing voltage that appears across a capacitor while the capacitor charges through a resistor (Fig. 9-3). But we learned in Sec. 2-5 that, in a simple circuit like Fig. 9-3, the capacitor voltage rises according to a curve (Fig. 9-4). That is, the capacitor-voltage waveform isn't linear.

We note, however, that during the early part of the waveform of Fig. 9-4 the curvature is only slight. If, then, we stop the capacitor-charging process at an early instant (say, at point M in Fig. 9-4), we limit the amount of curvature in the capacitor-voltage waveform. We can accomplish this result by means of the circuit of Fig. 9-5. Let's see how this circuit works.

We apply to the grid of the tube V_1 in Fig. 9-5 the voltage waveform shown in Fig. 9-6a. Initially the waveform of Fig. 9-6a has a voltage that makes V_1 conduct heavily. The resulting voltage drop across R holds the plate of V_1 (and therefore the upper terminal of C) at a low voltage E_{min} as shown in Fig. 9-6b. At instant K in Fig. 9-6a, this input waveform makes the grid so negative that V_1 doesn't conduct plate current. Thus V_1 is effectively out of the circuit, so that the capacitor C simply charges through the resistor R toward the supply voltage E_{bb}. Figure 9-6b shows the resulting output capacitor-voltage waveform. At instant M, the grid-input voltage waveform (Fig. 9-6a) again rises to its initial value so that V_1 conducts heavily. The resulting voltage drop across R allows C to discharge to the low voltage E_{min}, as shown in Fig. 9-6b. We use the rising voltage that appears across the capacitor, during the interval from instant K to instant M, as the runup portion of the time-base-generator output waveform.

The capacitor voltage remains at the value E_{min} until we again make the grid negative, as at instant N, when a new runup portion of the output waveform begins.

In the preceding sequence of operations, note that the rate of rise (slope) of the runup portion of the output waveform is determined by the time constant $R \times C$ (Sec. 2-5). Thus the two circuit components R and C set the horizontal-deflection speed of the cathode-ray-tube spot. To move the spot rapidly across the screen, we use small values of R and C. For slow sweeps, we use large values of R and C. We call C the timing capacitor, and we call R the timing resistor. We select R and C--and therefore the horizontal sweep rate--by means of the TIME/CM (or TIME/DIV) switch.*

When we use the time-base generator just described, the runup portion of the output waveform always curves at least a little. We can improve the linearity by increasing the supply voltage E_{bb}, or by stopping the capacitor-charging operation earlier, or both. But there are more convenient and effective ways to improve the linearity. We shall study some of these methods after we consider a few details of the operation of the circuit of Fig. 9-5.

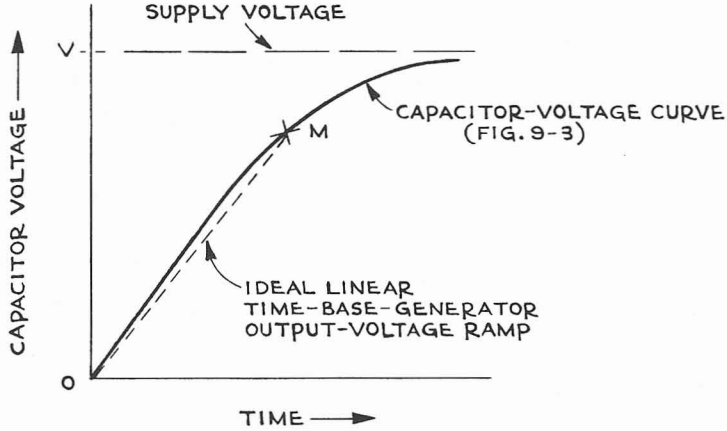

Fig. 9-4 In Chap. 2 we learned that the capacitor voltage in Fig. 9-3, that we want to use as a ramp voltage, actually rises along a curved graph (solid line shown here). But suppose we discontinue the charging process at an early instant (point M). Then the capacitor-voltage waveform doesn't differ extremely from the linear ramp voltage waveform we want (broken line).

9-3 Gating waveform. A gating waveform (gate) is a controlling waveform that we apply to a circuit for either of these purposes:

1. To permit the controlled circuit to generate some waveform while the gating waveform is present.

*On various oscilloscopes, this switch may be marked SWEEP RATE, SWEEP RANGE, SWEEP TIME, or SWEEP TIME/CM.

2. Or to permit the controlled circuit to transmit some waveform while the gating waveform is present.

For our present purposes, let's consider the first use of a gating waveform--to permit a controlled circuit to generate some waveform.

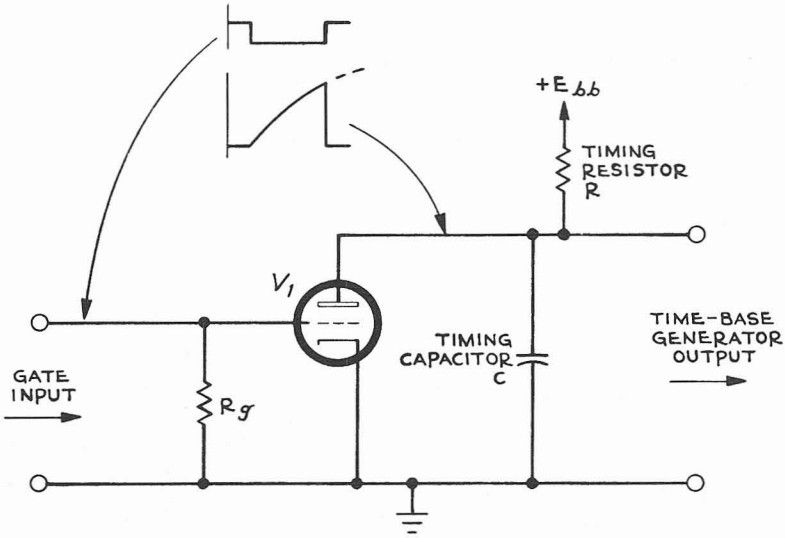

Fig. 9-5 A basic form of time-base generator. We apply the "gating" voltage waveform of Fig. 9-6a to the grid of V_1 in Fig. 9-5. At first, this grid-voltage waveform allows a heavy plate current to flow so that the plate voltage remains low (E_{min} in Fig. 9-6b). Then, during interval KM in Fig. 9-6a, the gating waveform cuts off plate current in V_1. Then C in Fig. 9-5 simply charges through R toward the supply voltage E_{bb} (Fig. 9-6b). Before this capacitor-voltage curve becomes extremely curved (broken line in Fig. 9-6b), the gating waveform again allows plate current to flow in V_1 (instant M in Fig. 9-6). Thus the V_1 plate voltage--which is also the capacitor voltage in Fig. 9-5--drops back to E_{min}. In this way we can achieve the result shown in Fig. 9-4.

For a gating waveform, we commonly use a rectangular wave--for example, a voltage waveform that varies between two definite voltages. We see that the grid-input waveform of Fig. 9-6a is a gating waveform. When the gating waveform has its more negative value, the circuit of Fig. 9-5 can generate the runup waveform of Fig. 9-6b. When the gating waveform has its more positive value, the circuit of Fig. 9-5 returns to its quiescent condition.

We sometimes call a gating waveform a keying waveform.

Later in this book we shall study circuits that can generate gating waveforms. For the present, let us simply note that we can use gating waveforms to control a time-base generator--that is, to start and stop the runup portions of the time-base-generator output waveform.

9-4 Clamping circuits. We very often use dc-coupled circuits to amplify the output waveform of a time-base generator and to apply this waveform to the horizontal-deflection plates of the cathode-ray tube. Thus the cathode-ray-tube spot starts its horizontal motion from a point that is established by the quiescent dc level at the output of the time-base generator. To make each horizontal sweep start from the same point, we have to make the time-base-generator output waveform return to the same quiescent voltage after each runup. In the circuit of Fig. 9-5, this fixed quiescent value is the minimum plate voltage E_{min} that is shown in Fig. 9-6b. We say that we have clamped the negative extremity of the time-base-generator output waveform to the fixed dc level E_{min}. In the circuit of Fig. 9-5, we determine the dc level E_{min} by setting the maximum positive excursion of the grid-input voltage of Fig. 9-6a--thereby setting the maximum plate current in V_1.

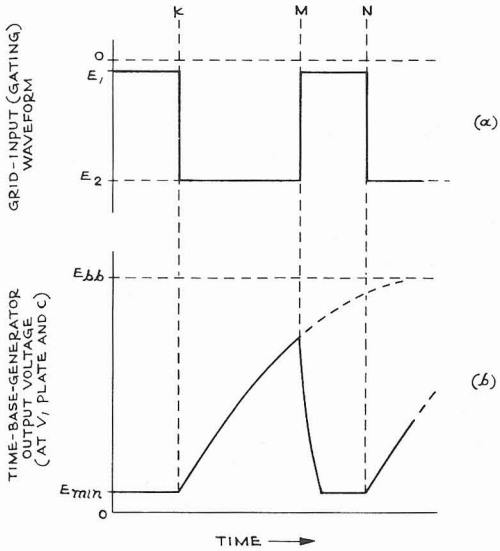

Fig. 9-6 (a) Input gating voltage that we apply to the grid of V_1 in Fig. 9-5. The higher voltage E_1 allows heavy plate current to flow in V_1. The lower voltage E_2 cuts off V_1 plate current.

(b) Graph of V_1 plate voltage--same as the voltage across capacitor C in Fig. 9-5. At times other than the interval KM, V_1 conducts heavy plate current. Outside interval KM, then, the resulting voltage drop across R in Fig. 9-5 holds the capacitor voltage at E_{min} in Fig. 9-6b. We say that V_1 clamps the lower extremity of the capacitor-voltage waveform at E_{min}. And we call the circuit of Fig. 9-5 a clamp-tube time-base generator. In interval KM, capacitor C charges toward E_{bb} as described in Fig. 9-5.

In Fig. 9-5, the circuit that includes V_1 can be called a clamp circuit (or clamping circuit, or clamper). Clamp circuits are used for several purposes, and there are several varies of clamp circuit that fill these needs. For our present purposes, let us consider clamp circuits that simply establish the positive or negative extremity of a waveform at some fixed dc level. The example of Fig 9-5, then, is a case where a clamp circuit establishes the negative extremity of the output sawtooth waveform at the dc level E_{min}.

We shall discuss other forms of clamp circuit as the need arises.

9-5 Bootstrap time-base generator. As we have already learned (Sec. 2-5), the reason for the curvature in the capacitor-voltage curve of Fig. 9-4 is that the capacitor voltage opposes the supply voltage E_{bb}. That is, as soon

as the timing capacitor C charges to some given voltage, this capacitor voltage opposes the supply voltage so that a smaller charging current flows into C. Thus, during the charging process, the charging current becomes steadily weaker so that the capacitor voltage rises at an ever-decreasing rate.

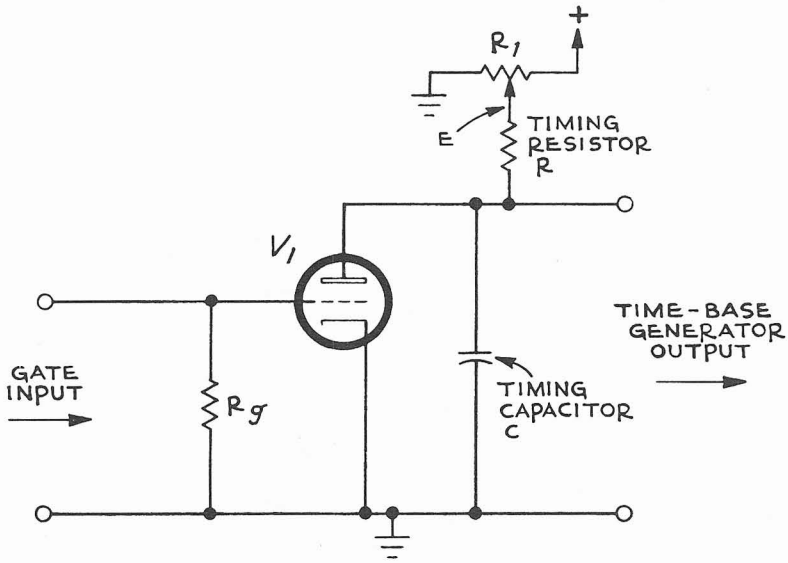

Fig. 9-7 A hypothetical way to modify the time-base generator of Fig. 9-5 and thus improve the linearity of the ramp output waveform of Fig. 9-6b. Assume here that we can find a way to slide the movable contact on R_1 in Fig. 9-7 automatically to the right, raising the "supply" voltage E as fast as C charges. In this way we might keep on charging C with a constant charging current, so that the output voltage across C rises at a constant rate.

We need to find some way to keep the charging current up to the value it had at the start of the runup portion. Then we can make the capacitor voltage rise in the desired linear manner. In other words, the basic problem of generating a linear runup is: How can we keep the capacitor-charging current constant?

One approach to this problem is shown in Fig. 9-7. Here we connect the upper end of the timing resistor R to the movable arm of a variable voltage divider R_1. Suppose for the moment, that we can provide some way to slide the movable contact automatically toward the positive end of R_1 as the timing-capacitor voltage increases. That is, the "supply" voltage E rises just as fast as the timing-capacitor voltage rises--so that the capacitor-charging current remains constant. In this way, we can generate a linear runup.

Of course, we can't provide the mechanical arrangement just suggested--except possibly for waveforms that rise quite slowly. But we can arrange an electronic system that operates in somewhat the same way, as follows.

Figure 9-8 shows, to the left of the dotted line, the time-base generator of Fig. 9-5. We apply to the grid of V_1 in Fig. 9-8 the voltage waveform of Fig. 9-9a--the gating waveform that starts and stops the runup. Initially, the waveform of Fig. 9-9a has a value that makes V_1 conduct heavily. That is, a relatively large V_1 plate current flows not only in the timing resistor R but in the diode V_3 of Fig. 9-8. V_3 isn't a perfect conductor. Therefore the resulting voltage drop across V_3 holds the effective V_1 "plate-supply" voltage E at an initial value E_1 (Fig. 9-9b) that is somewhat lower than the actual power-supply voltage E_{bb}. Furthermore, the V_1 plate current causes a voltage drop across the timing resistor R--so that the initial V_1 plate voltage E_{min} (Fig. 9-8c) is lower than E_1.

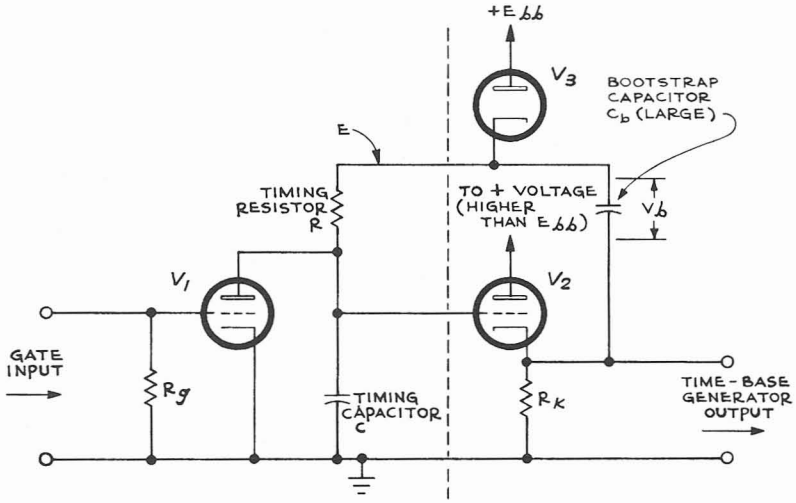

Fig. 9-8 A bootstrap time-base generator--a practical modification of the circuit of Fig. 9-5 that achieves the results described in Fig. 9-7. As previously described, the input gating voltage (Fig. 9-9a) initially holds the V_1 plate voltage at E_{min} (Fig. 9-9c). During this period the "supply" voltage E takes a value E_1 that is smaller than the power-supply voltage E_{bb} as a result of the voltage drop across diode V_3. Therefore C_b in Fig. 9-8 initially charges to a voltage V_b equal to the difference between E_1 and E_{min}. At instant K, the gate voltage cuts off V_1. Thus C starts to charge toward E_1. But the voltage across C also appears at the output of the cathode follower V_2. The voltage at the upper terminal of C_b rises a like amount, raising the "supply" voltage E (Fig. 9-9b). (This rise in E cuts off diode V_3 at instant P in Fig. 9-9b, preventing C_b from losing charge back into the E_{bb} supply.) Now as the voltage across C rises, C_b keeps the voltage E constantly V_b volts higher than the voltage across C. That is, C_b keeps the voltage across R constant at a value V_b volts. This constant voltage drop across R indicates a constant charging current in C. In this way we raise the voltage across C to a constant rate.

We connect the plate of V_1 to the grid of the cathode follower V_2. As a result, the initial V_2 cathode-output voltage is almost the same as E_{min} (Fig. 9-8c). Therefore capacitor C_b charges to a voltage V_b that is essentially equal to the difference between E_1 and E_{min}. We usually make C_b relatively large. Therefore, in any brief interval, any small current in C_b won't appreciably change the voltage V_b across C_b. To simplify what follows, assume that V_b remains constant.

At instant K in Fig. 9-9a, the grid-input gating waveform cuts off the plate current in V_1 through R and V_3. Thus the timing capacitor C tends to charge toward the power-supply voltage E_{bb}, in the manner of Fig. 9-6b. But this timing-capacitor-voltage rise also appears at the cathode of V_2. Therefore the voltage at the lower plate of C_b rises a like amount. But we assume that the voltage V_b across C_b remains constant. Therefore the V_1 "plate-supply" voltage E, at the upper terminal of C_b, rises just as the timing-capacitor voltage. In other words, the voltage across the timing resistor R remains constant at the value V_b. But, by Ohm's law, this constant voltage across R indicates that the current in R is constant. This constant current charges the timing capacitor C. Therefore the capacitor voltage rises linearly (see the second paragraph of this Sec. 9-5). Figure 9-9c shows this linear runup output from the time-base generator.

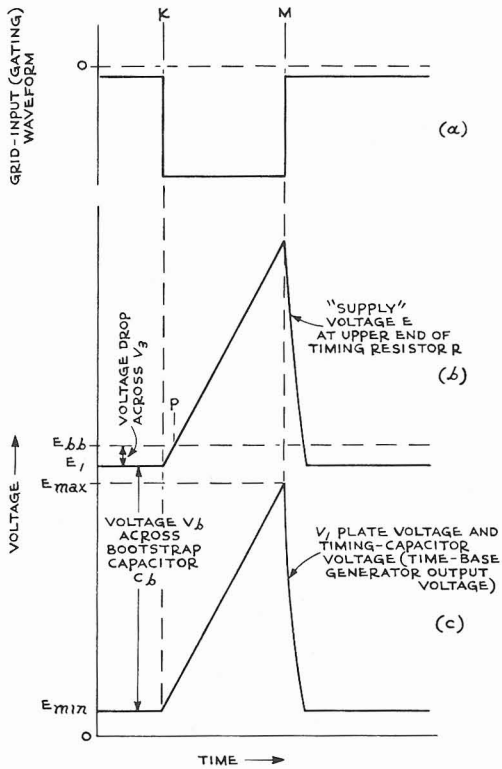

Fig. 9-9 Voltage waveforms in the bootstrap time-base generator, described in Fig. 9-8.

Note that the sum E of the timing-capacitor voltage plus the voltage V_b across C_b quickly exceeds the power-supply voltage E_{bb} (instant P in Fig. 9-9b). We include the diode V_3 to prevent C_b from discharging back into the E_{bb} supply. After instant P the electron current that charges the timing capacitor C flows through the timing resistor R to the positive

upper terminal of C_b; electrons flow from the lower terminal of C_b through V_2 to the V_2 plate supply. To maintain this electron flow we usually provide a plate voltage of V_2 that is considerably higher than the supply voltage E_{bb} for V_1.

Observe, too, that this electron current that charges the timing capacitor C also tends to discharge C_b. Any resulting decrease in the voltage V_b across C_b affects the runup linearity. Therefore we make C_b relatively large so that the timing-capacitor-charging current doesn't change V_b appreciably.

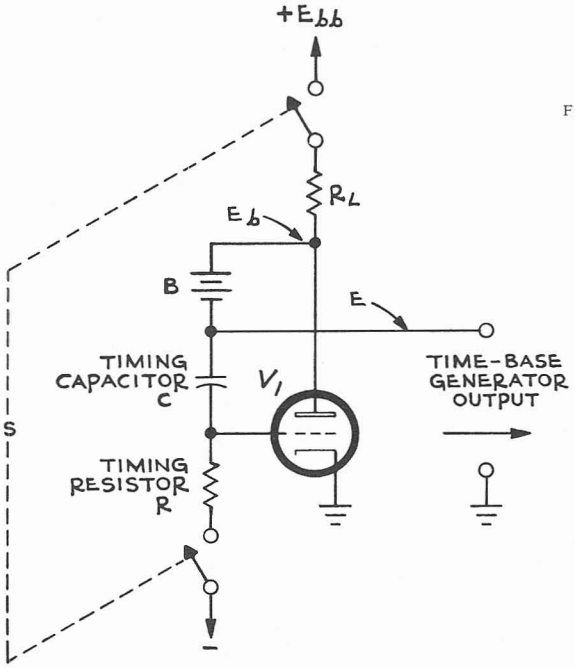

Fig. 9-10 Rudimentary Miller-runup time-base generator. When we close switch S, charging current for C flows through R and R_L. R_L also carries V_1 plate current. As C charges, this charging current tends to fall off. But the corresponding decrease in the voltage drop across R makes the grid of V_1 more negative (Fig. 9-11b). The resulting decrease in V_1 plate current reduces the voltage drop across R_L. Therefore the V_1 plate voltage E_b rises, restoring the charging current in C to nearly its initial value. By thus keeping the charging current essentially constant, we insure that the voltage across C rises at essentially a constant rate.

Compare the operation of the circuit of Fig. 9-8 with that of the simple clamp-tube time-base generator of Fig. 9-5. In Fig. 9-5, the timing-capacitor voltage rises along a curved graph (Fig. 9-6b) toward the supply voltage E_{bb}. But in Fig. 9-8 we add the cathode follower V_2 and the capacitor C_b. Here the effective "plate-supply" voltage E rises as fast as the timing-capacitor voltage. In this way, we raise the timing-capacitor voltage (time-base-generator output voltage) in a linear manner as shown in Fig. 9-9c. (In a sense, the "plate-supply" voltage E in Fig. 9-8 is "raised by its own bootstraps" through the action of C_b. Thus the name "bootstrap capacitor" for C_b--and the name "bootstrap time-base generator" for the circuit as a whole.)

At some instant M (Fig. 9-9) the time-base-generator ramp output voltage reaches the peak value E_{max} that we want from the time-base generator. As described in Chap. 11, we arrange the gating-signal source so that at instant M the V_1 grid-input gating voltage returns to its quiescent voltage

(Fig. 9-9c). Thus a large V_1 plate current flows. And the resulting voltage drop across R lets the timing capacitor C discharge to its quiescent voltage E_{min} .

9-6 Basic Miller runup time-base generator. Figure 9-10 shows a very effective system for maintaining a constant charging current into the timing capacitor C, and thus developing a linear runup. Assume that C initially holds no charge. If we now close the switch S, electrons flow through the timing resistor R to the timing capacitor C. Electrons flow from the upper terminal of C through the battery B, then through the plate-load resistor R_L to the positive power-supply terminal. As the charge accumulates in C, the resulting voltage across C opposes this charging current. Thus the charging current tends to decrease. But any decrease in charging current reduces the voltage drop across the timing resistor R, so that the upper terminal becomes more negative. Consequently the grid of the "Miller" tube V_1 becomes more negative, so that the plate current in V_1 decreases. Correspondingly, the voltage drop across R_L decreases. Therefore the voltage E at the upper terminal of the timing capacitor C becomes more positive. That is, if the charging current in C decreases, the voltage at the upper terminal of C increases to bring the charging current back to its original value.

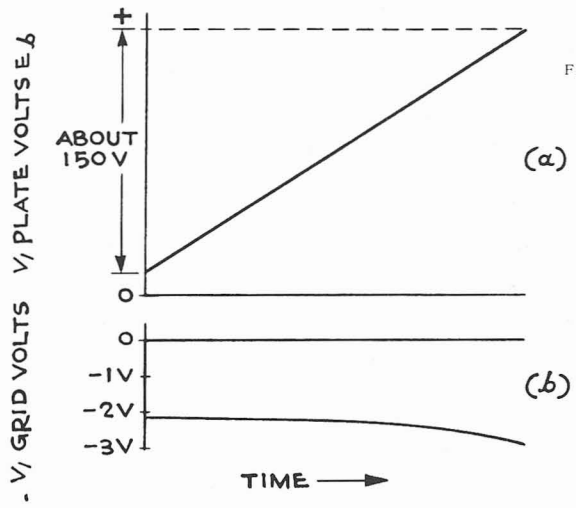

Fig. 9-11 (a) Linear (constant-rate) voltage rise across C described in Fig. 9-10.

(b) Small variation in V_1 grid voltage (Fig. 9-10) required to keep the charging current in C essentially constant. This small V_1 grid - voltage variation results from the small voltage-drop change across R, when the charging current in C tends to fall off.

Briefly, the V_1 grid "supervises" the charging current by "observing" the voltage drop across R. If the charging current falls off, the V_1 grid reduces the V_1 plate current. This plate-current change increases the voltage E at the upper terminal of the timing capacitor C--so that the charging current returns to its original value. Since the charging current remains essentially constant, we are able to develop a linear runup. Figure

9-11b shows how the V_1 grid voltage changes, during the output runup waveform of Fig. 9-11a.*

To see why we include the battery B, suppose for the moment that we remove the battery from the circuit (short circuit the battery terminals). Recall that we assumed the timing capacitor C contains no charge before we close the switch S. Then when we close switch S with no battery B, the plate and grid voltages of V_1 are equal. Under these conditions V_1 can't operate effectively. Now suppose we place the battery B back in the circuit. Then when we close S, the plate is more positive than the grid by the amount of the battery voltage, so that the tube can function normally. Actually, we ordinarily use a voltage source other than a battery, as described later.

9-7 Practical Miller runup time-base generator. Figure 9-12 shows a practical form of the Miller runup time-base generator. We apply the

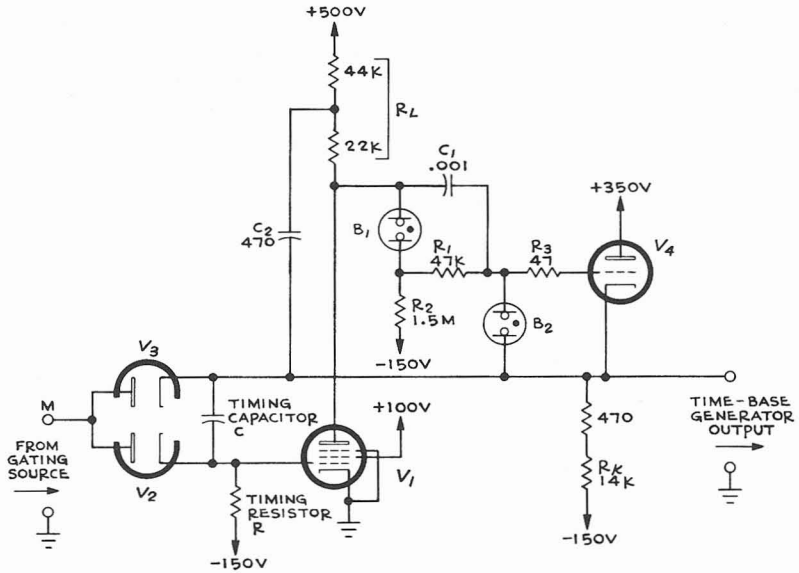

Fig. 9-12 Practical Miller-runup time-base generator described in the text.

*In passing, note that we have made the runup portion of the voltage across C linear. That is, we generate a linear voltage runup between the upper terminal of C and the grid of V_1. But the actual output of the time-base generator is the voltage between the upper terminal of C and ground. Clearly, then, any nonlinearity in the grid-voltage waveform appears in the output waveform. However, we customarily make the voltage gain of V_1 very large-- often several hundred. Therefore, the grid-voltage change can be very small, as shown in Fig. 9-11d. Thus the grid-voltage changes affect the output-waveform linearity only slightly.

gating waveform (Fig. 9-13a) to point M in Fig 9-12. At instant A (Fig. 9-13a) the gating waveform makes point M more negative. Thus the plates of the disconnect diodes V_2 and V_3 become more negative than the cathodes of these diodes, so that V_2 and V_3 don't conduct. Therefore the diodes are effectively out of the circuit, and the Miller runup circuit involving V_1 simply generates a runup voltage as described in the preceding section.

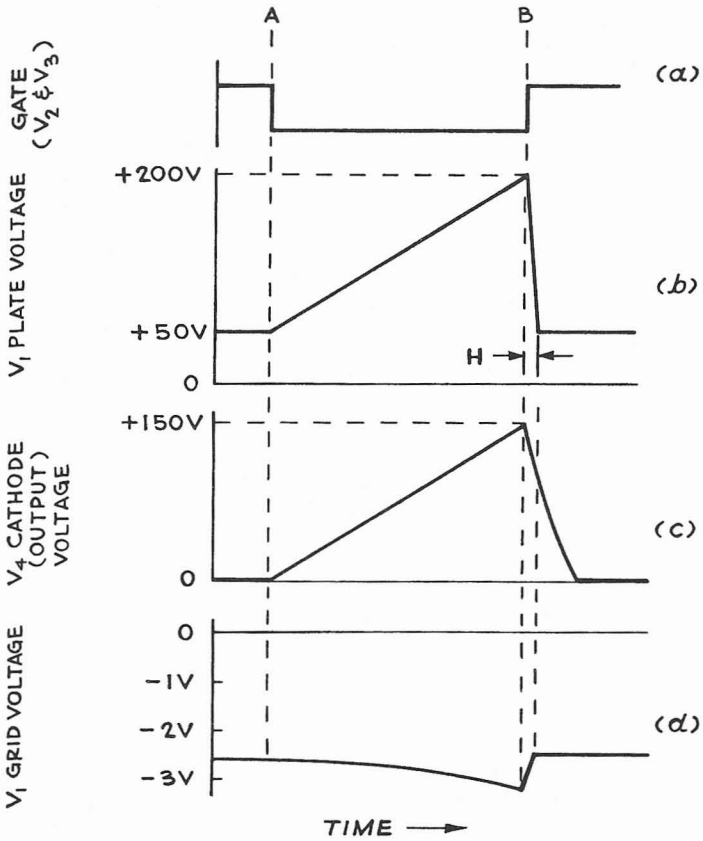

Fig. 9-13 Voltage waveforms in the Miller-runup time-base generator of Fig. 9-12, described in the text.

We include the cathode follower V_4 for two reasons:

1. In Fig. 9-10, the shunt capacitances of the timing capacitor C and of any load that we connect to the time-base-generator output terminals increase the risetime of the plate circuit of V_1. Thus in Fig. 9-12 we use the cathode follower V_4 to isolate these shunt capacitances from the V_1 plate circuit--so that we can use the circuit of Fig. 9-12 to develop a rapidly rising runup.

2. When we use the circuit to develop a rapidly rising runup, an appreciable charging current flows in C. In Fig. 9-10 this charging current flows in the battery B--so that B must be able to handle an appreciable current. But in Fig. 9-12, the charging current doesn't flow in B. Instead, electrons flow from the upper terminal of C to the V_4 cathode-to-plate circuit. Thus we can replace the battery B with a neon lamp B_1 as shown--even though the neon lamp can't handle very much current. The neon lamp has a constant-voltage characteristic, which keeps the voltage between the neon-lamp terminals at a fixed value of about 50 volts while the lamp receives current through R_2. Thus we keep the plate of V_1 at a higher voltage than the grid of V_1. Accordingly in Fig. 9-13b the plate of V_1 starts at about +50 volts and runs up to about +200 volts, while in Fig. 9-13c the grid of V_4 (and therefore the cathode of V_4) starts at about 0 volts and runs up to about +150 volts.

Resistor R_1 damps out any oscillations that B_1 might tend to generate as a neon-tube oscillator. Capacitor C_1 bypasses rapidly changing signal components around B_1 and R_1, so that the circuit can generate rapidly rising runup waveforms. Resistor R_2 is a "parasitic suppressor," reducing any tendency of V_4 to operate as a self-excited oscillator in conjunction with stray circuit constants. (We use such parasitic-suppressor resistors--perhaps 100 ohms or less--in series with various grids in oscilloscope circuits to avoid possible self-oscillation.)

The protective neon lamp B_2 prevents the grid of V_4 from becoming too positive with respect to the cathode of V_4 during the warmup period when we turn the instrument on. B_2 normally doesn't glow after the instrument has warmed up.

The bootstrap capacitor C_2 (Sec. 6-10) improves the operation of the time-base generator in developing rapidly rising runup waveforms.

To stop the runup portion of the output waveform (Fig. 9-13b) we make the gating waveform more positive at instant B (Fig. 9-13a). As a result, diode V_2 conducts, so that electrons flow through the timing resistor R, through V_2, and through the gating-waveform source. The timing resistor, diode V_2 and the gating-waveform source act as a voltage divider, so that the grid of V_1 becomes less negative as shown in Fig. 9-13d. As a result, the plate current in V_1 increases so that the plate voltage of V_1 drops rapidly (region H in Fig. 9-13b). Consequently the grid--and thus the cathode--of V_4 become less positive. (The cathode voltage of V_4 (Fig. 9-13c) drops a little less rapidly than the plate voltage of V_1, since the upper terminal of C has to receive electrons from the -150-volt supply via R_k.)

We must make sure that the cathode voltage of V_4 (that is, the output voltage of the time-base generator) falls only to some fixed value and no farther. That is, we must establish the negative extremity of the output waveform at some fixed dc level. We accomplish this clamping action as follows: When the cathode voltage of V_4 (that is, the output voltage of the time-base generator) drops below the gating-waveform voltage at point M, diode V_3 begins to conduct. The current in V_3 causes an appreciable additional voltage drop

across R_k. Therefore the upper end of R_k--the output terminal--can fall only to a voltage that lets V_3 conduct.

9-8 Miller rundown time-base generator. The Miller runup time-base generator we just studied is one of a family of circuits called Miller integrator circuits. Figure 9-14 shows in simplified form a Miller integrator called the Miller rundown time-base generator. In the Miller rundown circuit, we connect the timing resistor to a positive supply voltage--instead of to a negative supply voltage as we did in the Miller runup circuit.

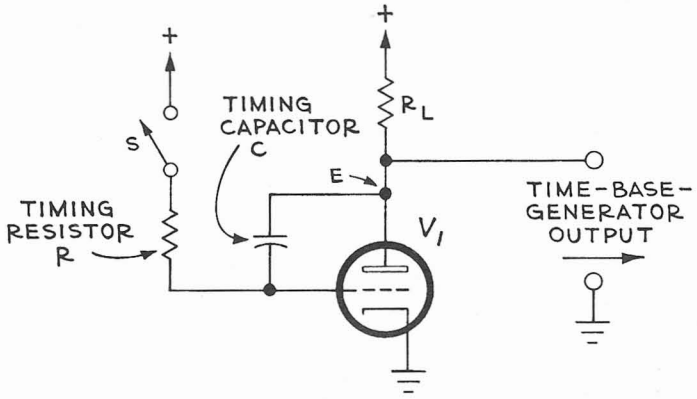

Fig. 9-14 Rudimentary Miller-rundown time-base generator. Assume that C is initially charged to an appreciable voltage (upper terminal of C positive). When we close switch S, we thus connect the two terminals of C to points that have about the same potential. Therefore C discharges through R and R_l, producing a rundown output ramp voltage (Fig. 9-15a). If the discharge current from C decreases, the resulting voltage-drop change across R raises the V_1 grid voltage (Fig. 9-15b). The resulting V_1 plate-current rise lowers the plate voltage E (Fig. 9-14)--forcing more charge from C. By thus keeping the discharge current of C essentially constant, we insure that the output rundown ramp voltage falls at a constant rate.

To understand the basic operation of the Miller rundown circuit, assume that the timing capacitor C is initially charged to some rather high voltage, the upper terminal of C being positive. When we close the switch S, we connect the two terminals of C to points that are at roughly the same potential. Therefore, C discharges through the plate-load resistor R_L and the timing resistor R. As C discharges, the voltage at the upper terminal of C drops according to the graph of Fig. 9-15a, producing a negative-going output waveform (in contrast to the positive-going output waveforms we have been studying). As the capacitor voltage decreases, the discharge current tends to fall off. But any decrease in discharge current reduces the voltage drop across the timing resistor R--so that the grid of V_1 becomes more positive (Fig. 9-15b). Consequently, the plate current in V_1 increases, and the voltage E at the plate of V_1 correspondingly drops. Thus the discharge current in C remains essentially constant so that we develop a linear rundown voltage across C, as shown in Fig. 9-15a.

In a practical circuit, of course, we don't include the switch S. Instead, we start and stop the rundown portion of the output sawtooth waveform by means of a gating pulse. For example, suppose we use a pentode as a Miller rundown time-base generator. And suppose we hold the suppressor voltage sufficiently negative to prevent plate-current flow. Thus the plate voltage is high so that the timing capacitor is charged. To start the rundown portion of the output waveform, we can apply a positive-going gating voltage to the suppressor so that plate current flows. Then the time-base generator develops the rundown portion of its output waveform as just discussed. When we return the suppressor gating voltage to its negative extreme, plate current stops and the generator-output voltage returns to its quiescent, highly positive value.

9-9 Phantastron time-base generator. A phantastron* time-base generator is a Miller rundown circuit that generates its own gating waveform in response to an input triggering waveform that might be only a brief pulse.**

Figure 9-16 shows one form of phantastron time-base generator. When the circuit is quiescent, the screen of V_1 conducts heavily so that the screen voltage is low. The voltage divider R_D that supplies the screen voltage also supplies the suppressor voltage; therefore the suppressor voltage is also low. This low suppressor voltage prevents plate current from flowing, so that the plate voltage is high.

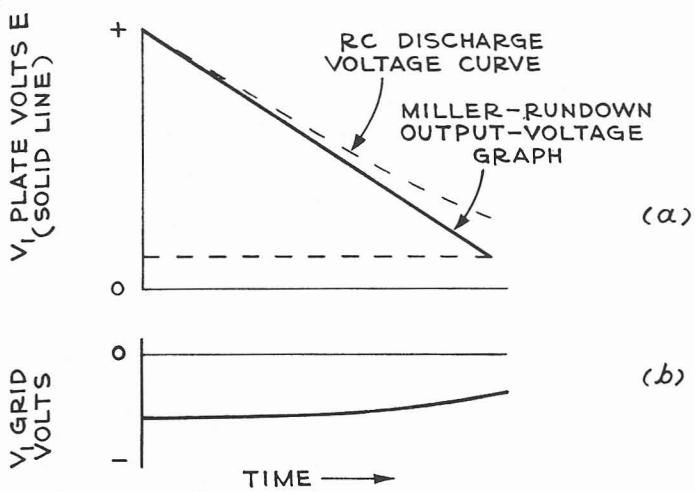

Fig. 9-15 Voltage waveforms in the Miller-rundown time-base generator of Fig. 9-14.

* Some users have considered the operation of this time-base generator to be fantastic; hence the name phantastron.

** Circuits that generate triggering waveforms are described later in this book.

To make the circuit generate a rundown waveform we apply a brief negative-going triggering voltage (Fig. 9-17a) to the plate of V_1. Since the voltage across the timing capacitor C can't change instantly (Sec. 2-1), this negative-going trigger voltage also reaches the grid of V_1 (instant A, Fig. 9-17b). As a result, the screen current drops so that the screen voltage rises (Fig. 9-17c). Capacitor C_D couples this screen-voltage rise to the suppressor (Fig. 9-17d) essentially without loss in the voltage divider R_D. The increased suppressor voltage allows plate current to start, so that the plate voltage drops (Fig. 9-17e). The drop in plate voltage lowers the potential at the left-hand end of the timing capacitor C. Therefore C discharges through the timing resistor R. Thereafter the time-base generator develops a linear rundown after the manner of the Miller rundown circuit (Sec. 9-8).

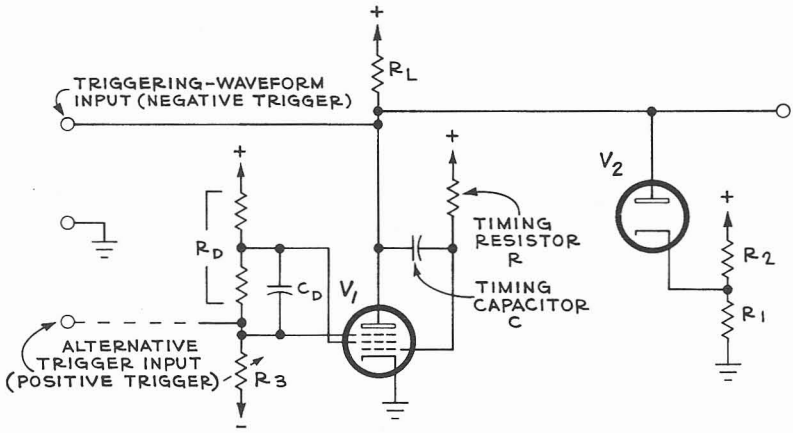

Fig. 9-16 Phantastron time-base generator, basically like the Miller-rundown generator (Fig. 9-14). But the phantastron generates its own gating waveform (the positive-going suppressor-voltage rectangular waveform of Fig. 9-17d). The circuit initiates the gating waveform in response to an input triggering waveform that might have any of a wide variety of wave shapes--including that of Fig. 9-17a, for example. Initially, the suppressor voltage is low so that no plate current flows and the electron flow is diverted to the screen. Thus the screen voltage is initially low (Fig. 9-17c). And the plate voltage is clamped by diode V_2 at a high value E_{QP} (Fig. 9-17e). At instant A in Fig. 9-17, capacitor C couples the input negative triggering waveform a from the plate to the grid of V_1, reducing the screen current. C_D in Fig. 9-16 couples the resulting screen-voltage rise to the suppressor, starting the plate current. Then the circuit develops a linear rundown ramp in the manner of the Miller rundown circuit. When the plate voltage falls sufficiently, the screen again captures the electron flow and the circuit returns to its initial quiescent state (instant B, Fig. 9-17).

After a time, the plate voltage drops so low that the plate no longer strongly attracts electrons. Therefore the screen captures the electrons from the cathode, so that the screen voltage drops and the plate voltage rises (instant B, Fig. 9-17).

When the plate voltage rises to a certain value E_{QP} (Fig. 9-17e), diode V_2 begins to conduct. Current in V_2 causes an additional voltage drop in R_L so that the V_1 plate voltage can't rise appreciably above the voltage

E_{QP} at which V_2 conducts. Thus V_2 clamps the positive extremity of the V_1 plate-voltage waveform to a fixed quiescent dc level. We call V_2 a clamping diode or catching diode.

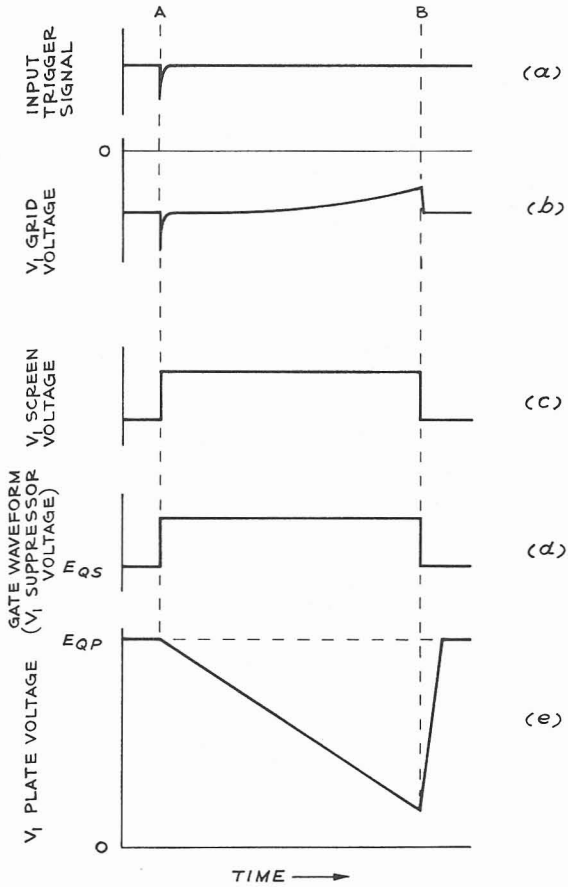

Fig. 9-17 Voltage waveforms in the phantastron circuit of Fig. 9-17.

Here we can consider that the suppressor-voltage waveform of Fig. 9-17d constitutes a positive-going gating waveform, developed by the phantastron time-base generator itself, that starts and stops the rundown ramp output. At instant *A* the input triggering waveform of Fig. 9-17a starts the gate (Fig. 9-17d). At instant *B* the electron-flow transition from the plate to the screen drops the screen voltage and ends the gate waveform of Fig. 9-17d.

Rather than apply the negative-going triggering waveform of Fig. 9-17a to the plate circuit of V_1 in Fig. 9-16, we can alternatively apply a positive-going triggering waveform to the suppressor of V_1. In this latter operation,

the positive-going triggering voltage at the suppressor starts the plate current. The timing capacitor C couples the resulting plate-voltage drop to the grid. This grid-voltage drop reduces the screen current, so that the screen voltage rises as in Fig. 9-17c. Thenceforward the circuit operates in the manner just described for the case where we applied a negative-going triggering waveform to the plate circuit.

9-10 Stability control for the phantastron circuit. In some cases we want a front-panel control by which we can put the phantastron time-base generator in any one of three operating conditions.

1. Triggered operation, where the time-base generator delivers an output negative-going ramp voltage waveform in response to an input triggering waveform, as just described.

2. Or free-running operation, where the time-base generator delivers successive sawtooth output-voltage waveforms (Fig. 9-17c) in a periodic manner without regard to whether we apply external triggering waveforms or not.

3. Or the off condition, where the time-base generator does not deliver any ramp output waveform. Instead, the time-base-generator output-circuit voltage simply remains at its quiescent value, even though we might apply external triggering waveforms.

To provide such a front-panel control, we can make R_3 in Fig. 9-16 a variable resistor instead of a fixed resistor. We then label R_3 as the STABILITY control. Suppose first that we set this STABILITY control for a small value of resistance (at or near the full-left or counterclockwise position). Now the voltage-divider action of R_3 and R_D (Fig. 9-16) thereby sets the quiescent suppressor voltage E_{QS} (Fig. 9-17d) at a low value. This low suppressor voltage prevents V_1 plate current even if we apply external triggering waveforms of any ordinary amplitude (off condition).

Next suppose we set the STABILITY control R_3 for a large value of resistance (at or near the full-right or clockwise position). Thus the voltage-divider action of R_3 and R_D in Fig. 9-16 sets the quiescent suppressor voltage E_{QS} (Fig. 9-17d) at a relatively high value. This new higher value of E_{QS} allows V_1 plate current to resume almost as soon as the plate-output voltage (Fig. 9-17e) returns to its quiescent value E_{QP} after the end of each ramp. The resulting plate-voltage drop reaches the grid of V_1 by way of the timing capacitor C. The corresponding V_1 grid-voltage drop reduces the screen current, so that the screen voltage rises. C_D couples the screen-voltage rise to the suppressor, augmenting the plate-current flow. In this way a new output rundown ramp starts even without any external triggering waveform (free-running operation).

For triggered operation, we must set the STABILITY control R_3 in Fig. 9-16 for a resistance sufficiently large to apply, by voltage-divider action including R_D, an appreciable dc voltage to the suppressor of V_1. In this way we ensure that an incoming triggering waveform can start

V_1 plate current. But we must not set the STABILITY control R_3 for too large a resistance--for then the phantastron circuit would operate in a free-running manner as we considered previously. Thus, to achieve triggered operation of the phantastron time-base generator, we can set the STABILITY control to a point just to the left (counterclockwise) from the point where free-running operation ceases.

Chapter 10
MULTIVIBRATORS

In previous sections, we learned of the need to generate gating waveforms (Sec. 9-3) and triggering waveforms (Sec. 9-9). We commonly use multivibrators to generate these two kinds of waveforms. Other uses of multivibrators are in square-wave generators and in frequency dividers.

A multivibrator typically includes two tubes (V_1 and V_2 in Fig. 10-1). The multivibrator changes alternately from one of two definite states to the other. These two states are:

1. A first state when V_1 does not conduct plate current, while V_2 conducts appreciable plate current.*

2. And a second state where V_1 conducts appreciable plate current, while V_2 does not conduct plate current.

(Between these two definite states, the multivibrator goes through a third brief transitional state while the plate current switches on in one and off in the other tube. We can call this third state the unstable state of the multivibrator.)

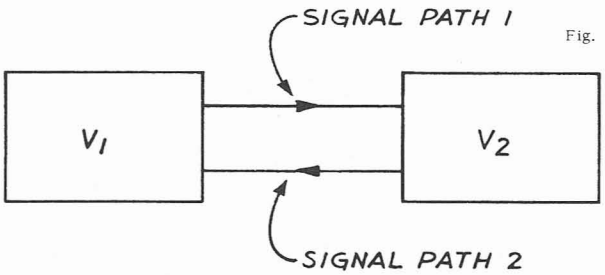

Fig. 10-1 Basic multivibrator. We connect two tubes V_1 and V_2 so that each tube influences the plate current in the other. When V_1 conducts plate current, V_1 can thereby hold V_2 in plate-current cutoff--and vice versa.

10-1 Plate-coupled astable multivibrator. An astable multivibrator switches successively from one of the two definite states just mentioned to the other definite state and back again, without requiring any external signal to produce the switching action. That is, the astable multivibrator can operate in a free-running manner, producing an output waveform whose repetition frequency depends upon the circuit constants of the multivibrator.

Figure 10-2 shows a plate-coupled astable multivibrator. From a simplified viewpoint, the operation is as follows. When we apply power to the circuit,

*Some treatments state that one of the tubes is cut off while the other tube is saturated. However, the plate current in the conducting tube doesn't by any means have to equal the usually heavy current implied by the word saturation. Therefore we shall simply say that one tube is cut off while the other conducts.

one tube conducts more plate current than the other tube.* Suppose, for example, that V_2 conducts more heavily than V_1. The resulting plate-voltage drop at V_2 appears at the grid of V_1, since the voltage across C_2 can't change instantly. Thus the plate current in V_1 decreases so that the plate voltage of V_1 rises. This plate-voltage rise appears at the grid of V_2, since the voltage across C_1 can't change instantly. Thus before long the plate current in V_1 is cut off, and V_2 conducts appreciable plate current.

The resulting voltage drop at the plate of V_2 places the grid voltage of V_1 appreciably below the cut-off point. Therefore V_1 can't conduct until C_2 discharges through R_2 sufficiently to let the grid voltage of V_1 rise above cutoff. When V_1 does start to conduct, C_1 couples the resulting V_1 voltage drop to the grid of V_2. Thus the plate voltage of V_2 rises, so that the grid voltage of V_1 rises. Soon, then, the original situation is reversed--V_1 conducts appreciable plate current and V_2 is cut off.

The above actions repeat themselves indefinitely, with the two tubes alternately conducting. The time interval during which each tube conducts depends upon the supply voltage, the tube characteristics, and particularly the time constants of the combinations R_1C_1 and R_2C_2. When V_1 and V_2 are tubes of the same type, and when we make $C_1 = C_2$, $R_1 = R_2$, and $R_3 = R_4$, we can expect the two tubes to conduct for approximately equal intervals; and we say that the multivibrator is symmetrical.

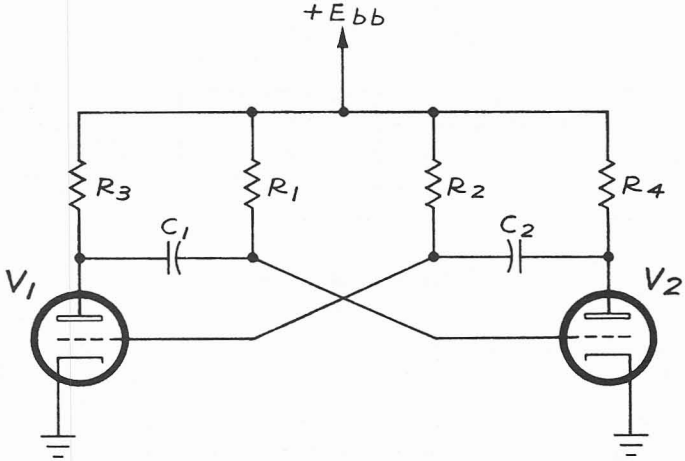

Fig. 10-2 Plate-coupled astable multivibrator. As described in Secs. 10-1 and 10-2, this multivibrator can operate in a free-running manner. In such operation V_2, for example, first conducts plate current while V_1 is cut off. Then V_1 conducts while V_2 is cut off. Plate-current conduction periodically switches back and forth between V_1 and V_2. The repetition frequency of this switching action depends, among other things, upon the time constants R_1C_1 and R_2C_2. Thus for a "coarse" frequency control, we can switch various values of these resistances and capacitances into the circuit.

*Even if the tubes were theoretically balanced, normal variations in electron flow (tube noise) would quickly cause the instantaneous plate current in one tube to exceed that in the other tube.

For a more detailed description of the multivibrator of Fig. 10-2, you can read the next section.

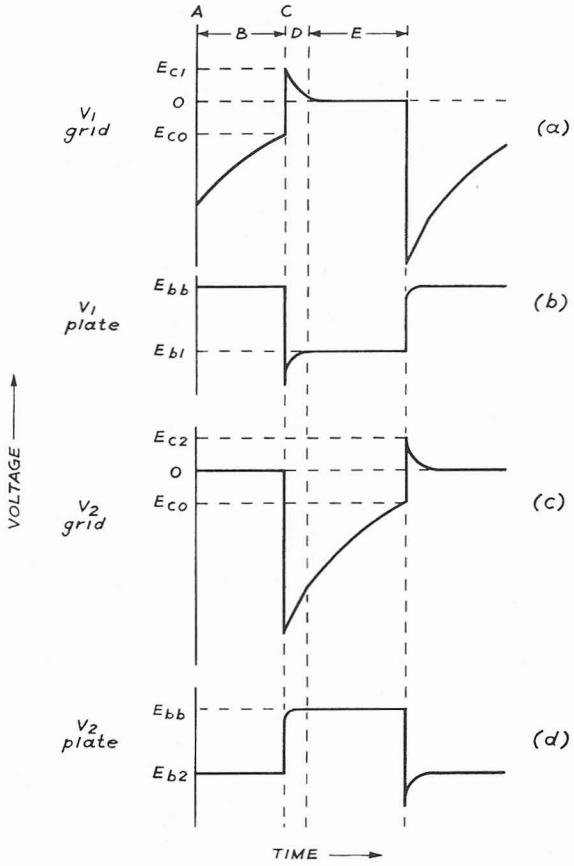

Fig. 10-3 Plate- and grid-voltage waveforms for V_1 and V_2 in Fig. 10-2, as described in Sec. 10-2.

10-2 Detailed operation of plate-coupled astable multivibrator. In this section, let's study the detailed operation of the multivibrator of Fig. 10-2, by means of the waveforms of Fig. 10-3.

a. Conditions at instant A. The following four paragraphs describe conditions that exist at some instant A as shown in Fig. 10-3.

1. At instant A (Fig. 10-3a) the capacitor C_2 contains a charge such that the left-hand terminal of C_2 is negative with respect to ground. (The manner in which C_2 acquired this charge will be described shortly.) Let the negative voltage at the left-hand terminal of C_2 be sufficient to cut off the plate current of V_1. Thus the plate voltage of V_1 (Fig. 10-3b) is equal to the supply voltage E_{bb}.

2. At instant A the grid of V_2 is at essentially ground potential (Fig. 10-3c). In fact, we can assume that the grid of V_2 is barely positive, so that a few electrons flow from the grid of V_2 through R_1. We make R_1 large, so that this grid current causes a large voltage drop in R_1. Thus the grid of V_2 is actually clamped at essentially ground potential. (In practice, the grid of V_2 may be at ground or even slightly negative since grid current flows in some tubes even when the grid is not positive.)

3. Since the plate of V_1 is at the supply potential E_{bb} (paragraph 1), and since the grid of V_2 is clamped at about ground potential (paragraph 2), capacitor C_1 is charged to approximately the supply voltage E_{bb}.

4. Since the grid of V_2 is clamped about ground potential (paragraph 2), V_2 conducts appreciable plate current. Therefore the plate voltage of V_2 (Fig. 10-3d) has a value E_{b2} that is considerably below the supply voltage E_{bb}.

b. Action during the interval B. The following paragraph describes changes that occur during the interval B, immediately following instant A in Fig. 10-3.

5. Capacitor C_2 discharges through R_2. Thus the left-hand terminal of C_2 (and therefore the grid of V_1) becomes less negative as shown in interval B of Fig. 10-3a. But since V_1 nevertheless is still operating with its grid below cutoff, the other circuit conditions remain unchanged.

c. Switching action (unstable stage; instant C through interval D). The following paragraphs describe the multivibrator switching action that results in plate-current cutoff in V_2 and plate-current conduction in V_1.

6. At instant C (Fig. 10-3a) the grid of V_1 reaches the cut-off voltage E_{co} so that V_1 begins to conduct plate current. Consequently the plate voltage of V_1 drops (instant C in Fig. 10-3b). Since the voltage across C_1 can't change instantly, the voltage at the grid of V_2 also drops (Fig. 10-3c). Thus the plate current in V_2 decreases.

7. As the plate current decreases in V_2, the plate voltage of V_2 rises toward E_{bb} (Fig. 10-3d). Since the voltage across C_2 can't change instantly, the voltage at the grid of V_1 rises rapidly (instant C of Fig. 10-3a). Thus we have two simultaneous actions that aid each other: (a) the plate current of V_2 falls, so that the grid voltage of V_1 rises, and (b) the plate current of V_1 rises, so that the grid voltage of V_2 falls. Consequently, V_2 makes a rapid transition from conduction to cutoff; and V_1 makes a rapid transition from cutoff to conduction.

8. At instant C, when V_1 starts to conduct, the grid of V_1 is at cutoff voltage E_{co} (Fig. 10-3a). And the plate of V_2 is at the voltage E_{b2} (paragraph 4). Therefore, just as V_1 starts to conduct, C_2 is charged to the difference between E_{b2} and E_{co}. Now V_2 goes into cutoff so that the plate voltage of V_2 rises (paragraph 7). The voltage across C_2 can't change instantly. Therefore the voltage at the grid of V_1 takes a somewhat positive value E_{c1} (Fig. 10-3a), so that appreciable current flows in the grid of V_1. This grid

current provides electron flow into the left-hand terminal of C_2. A corresponding number of electrons flows from the right-hand terminal of C_2 through R_4. The resulting additional voltage drop across R_4 slows the rise of the plate voltage of V_2 (interval D, Fig. 10-3d).

9. When the plate voltage of V_2 stabilizes at the supply voltage E_{bb}, the charging current in C_2 drops off. Therefore the voltage drop between the cathode and the grid of V_1 (that is, the grid voltage of V_1) decreases slightly (interval D, Fig. 10-3a). But a small current still flows in the grid of V_1. This grid current flows in the large resistance R_2, clamping the grid of V_1 at essentially ground potential (compare the situation in paragraph 2, for the grid of V_2).

10. As described in paragraphs 8 and 9, the plate-voltage rise of V_2 drives the grid of V_1 briefly positive; then the grid of V_1 returns to a voltage near ground (interval D, Fig. 10-3a). This positive excursion of the grid of V_1 makes the plate current of V_1 quite large for a brief interval, so that the plate voltage of V_1 becomes quite low for a brief interval. This action explains the brief drop in the plate voltage of V_1 shown in interval D of Fig. 10-3b, and the corresponding negative excursion in the grid voltage of V_2 shown in interval D of Fig. 10-3c.

11. When V_1 goes into plate-current conduction (paragraph 7), the plate voltage of V_1 drops from the supply voltage E_{bb} to a lower voltage E_{b1} (Fig. 10-3b). But we noted (paragraph 3) that C_1 was charged to approximately the supply voltage E_{bb}. Since the voltage across C_1 can't change instantly, we have now driven the grid of V_2 negative by the amount of the difference between E_{bb} and E_{b1} (Fig. 10-3c). Thus, in the interval E following the interval D, V_1 continues to conduct while V_2 remains cut off--so that all circuit conditions remain fixed except that C_1 discharges through R_1 as shown in Fig. 10-3c. (It was in a similar manner that C_2 received the charge described in paragraph 1--except that C_2 was charged during the preceding half-cycle of multivibrator operation.)

The above actions complete the first half-cycle of multivibrator action. C_1 now discharges through R_1, according to the curve of interval E of Fig. 10-3c. When this discharge allows the grid voltage of V_2 to rise to the cut-off voltage E_{co}, V_2 again conducts and V_1 goes into cutoff, so that the full cycle of operations is complete.

10-3 Output connections. Perhaps the output voltage waveform we most often want from a multivibrator is a square wave, or approximately a square wave. Figures 10-3b and d show the voltage at the plate of either tube in the plate-coupled astable multivibrator is roughly a square wave. (If we want to remove the upper rounded corner and the lower spike, we can use subsequent wave-shaping stages--usually over-driven amplifiers.)

But the load circuit we connect to a multivibrator plate might adversely affect the multivibrator waveform. To avoid this possibility, we can connect a small resistance in series with the cathode of one of the multivibrator tubes. Then as the tube switches from cutoff to conduction and back again,

the cathode voltage rises and falls. If we connect the load circuit to the cathode rather than the plate, the load will ordinarily have little effect on the output waveform.

Sometimes we need a separate synchronizing waveform to operate some other device--such as an oscilloscope time-base generator--in synchronism with the multivibrator. We can derive a synchronizing waveform from the cathode circuit of the other multivibrator tube.

10-4 Frequency and symmetry controls. As we have already noted, the repetition frequency of the multivibrator output waveform depends principally upon the time constants R_1C_1 and R_2C_2 in Fig. 10-2. Thus we can provide a coarse control of the repetition frequency by switching or adjusting these resistors and capacitors.

For a fine control of the repetition frequency, we can connect the grid resistors R_1 and R_2 to an adjustable voltage divider R_5 as shown in Fig. 10-4. By raising the voltage at the upper ends of R_1 and R_2, we can discharge the capacitors C_1 and C_2 more rapidly. In this way, we bring the voltages at the grids of the multivibrator tubes more quickly up to the cut-off voltage of the tubes during each cycle of operation. Therefore we raise the repetition frequency of the multivibrator output waveform.

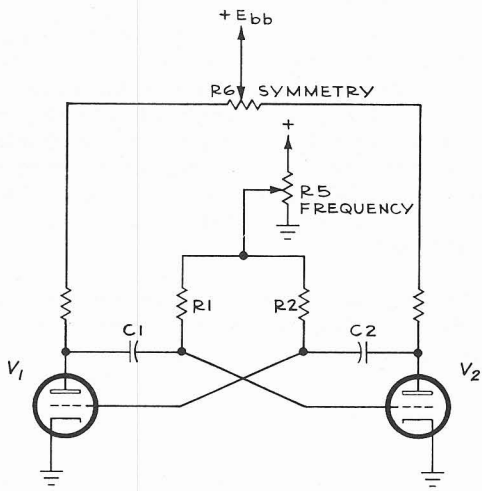

Fig. 10-4 A modified form of the plate-coupled astable multivibrator. As described in Sec. 10-4, R_5 provides a "fine" control of the multivibrator repetition frequency. And R_6 allows us to equalize the V_1 and V_2 plate-current-conduction intervals. That is, R_6 serves as a "symmetry" control.

We often need to control the relative amount of time occupied, during each operating cycle, by the positive and the negative portions of the output waveform. In other words, we might want to adjust the multivibrator so that the positive and the negative portions of the output waveform occupy equal time intervals--regardless of moderate differences in the tubes or circuit components. Or we might want to adjust the multivibrator so that the positive and the negative portions of the output waveform occupy different time intervals, according to some desired ratio. Figure 10-4 shows how

we can incorporate a symmetry control R_6. This control raises the "supply" voltage for the plate (or screen) of one multivibrator tube while lowering the corresponding "supply" voltage for the other multivibrator tube. The resulting adjustments in plate current determine the amount of plate-voltage change that occurs when a multivibrator tube goes from cutoff into conduction. Correspondingly, the amount of this plate-voltage change determines how far into the cut-off region we shall drive the grid of the other multivibrator tube. And therefore we can control the relative lengths of time required for the grid voltage to rise to the cut-off point--thus controlling the relative time intervals occupied by the positive and the negative portions of the output waveform.

10-5 Synchronized operation; frequency division. We sometimes need to make the multivibrator generate its output waveform in synchronism with some other externally generated waveform. As an example, we might need to use a standard-frequency source to control the repetition frequency of the multivibrator output waveform.

Figure 10-5 shows a way of applying synchronizing waveforms to a multivibrator. (Spike pulses make perhaps the best synchronizing pulses,

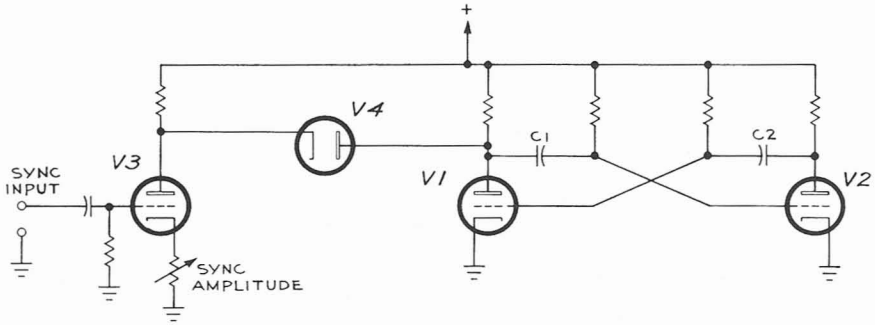

Fig. 10-5 How to apply an external synchronizing signal to the plate-coupled astable multivibrator (Sec. 10-5). With this system we can make the multivibrator repetition frequency equal either to the synchronizing-signal frequency, or to the synchronizing-signal frequency divided by some whole number.

but we can usually successfully use other synchronizing waveforms.) Suppose we apply a positive-going spike (Fig. 10-6a) to the grid of the amplifier tube V_3. The amplified waveform that appears at the plate of V_3 is a negative-going spike (Fig. 10-6b). We apply this negative-going spike to the plate of the multivibrator tube V_1, by way of the diode V_4. Assume that V_1 is cut off (and therefore that V_2 conducts plate current). Thus the voltage at the plate of V_1 is high, and the diode V_4 can transmit the negative-going spike from the plate of V_3 to the plate of V_1. Capacitor C_1 couples this negative-going spike to the grid of V_2. Since V_2 is conducting, the spike appears at the plate of V_2 as a positive-going spike (Fig. 10-6c). Capacitor C_2 couples this positive-going spike to the grid of V_1. But while V_1 is cut off, the voltage at the grid of V_1 (Fig. 10-6d) is rising toward the cut-

off voltage according to the multivibrator action we have already studied. If the voltage at the grid of V_1 is sufficiently close to the cut-off voltage, the additional positive-going spike will be sufficient to make V_1 start to conduct at instant K (solid-line curve, Fig. 10-6e). Then the multivibrator switches conduction from V_2 to V_1 in the usual manner. Thus we have made V_1 conduct earlier than would have been the case without the synchronizing pulse. (The broken-line curve of Fig. 10-6e shows the instant M at which V_1 would have gone into conduction in the absence of the synchronizing pulse.)

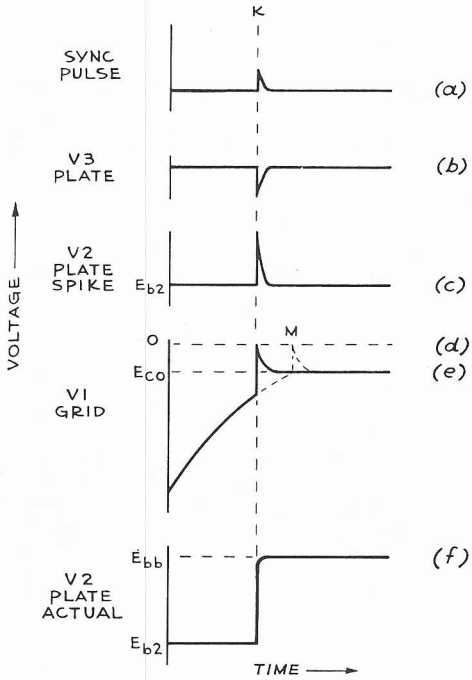

Fig. 10-6 Plate- and grid-voltage waveforms for V_1 and V_2 in Fig. 10-5, when we make the multivibrator repetition frequency equal to the external-synchronizing-signal frequency (Sec. 10-5).

It is essential to this operation that V_1 shouldn't go into conduction before the synchronizing pulse arrives at the grid of V_1. Correspondingly, we have to adjust the free-running frequency of the multivibrator to a value slightly lower than the repetition frequency of the synchronizing pulses.

The circuit of Fig. 10-5 is also an effective frequency-dividing circuit. Suppose, for example, that we want the repetition frequency of the multivibrator output waveform to be one-fifth the frequency of the input synchronizing waveform. We adjust the free-running frequency of the multivibrator to a value slightly lower than one-fifth the synchronizing frequency. Then, if the synchronizing pulses aren't too large, every fifth pulse from the synchronizing source will be just sufficient to bring V_1 into conduction as shown in Fig. 10-7. (We can limit the amplitude of the synchronizing pulses manually by means of a variable cathode resistor in the amplifier

V_3. In this way we control the operating point of V_3, and thus we control the voltage gain of V_3.)

When V_1 conducts plate current, the voltage at the plate of diode V_4 is low (less positive than the cathode of V_4). We note, then, that the diode V_4 can't apply synchronizing pulses to the multivibrator circuit until the latter part of the multivibrator operating cycle.

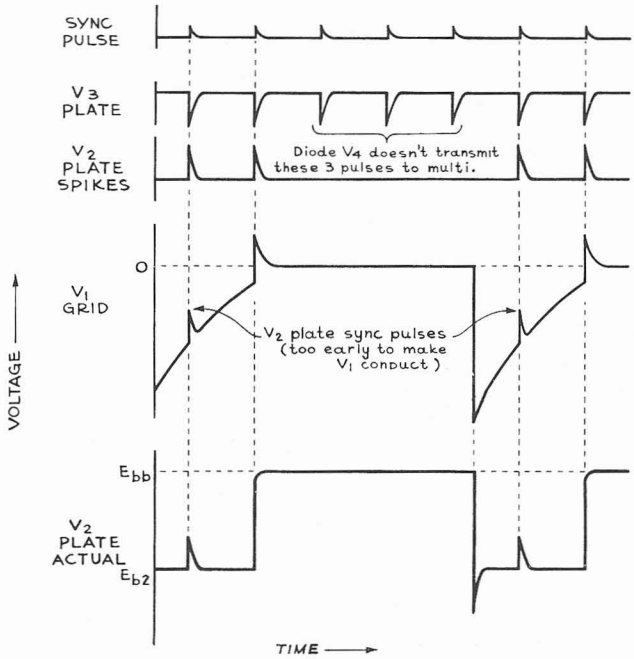

Fig. 10-7 Plate- and grid-voltage waveforms for V_1 and V_2 in Fig. 10-5, when we make the multivibrator repetition frequency equal to the external-synchronizing-signal repetition frequency divided by a whole number (here, this frequency-division ratio is 5).

10-6 Monostable multivibrators.* A monostable multivibrator has two definite states:

1. A first state (called the stable state) where V_1 does not conduct plate current and where V_2 conducts appreciable plate current. The multivibrator remains in this first state indefinitely unless we apply an external actuating signal.

2. And a second state (called the quasi-stable state) where V_1 conducts appreciable plate current, while V_2 does not conduct plate current. We

*A monostable multivibrator is variously called a flip-flop, a single-shot, a one-shot, a univibrator, a single-cycle, a single-step multivibrator, a delay multivibrator, or a gating multivibrator--depending somewhat upon the purpose for which the circuit is used.

use an external actuating signal to make the multivibrator assume the quasi-stable stage. After an interval that is determined by the circuit constants of the multivibrator, the circuit returns to the first or stable state--remaining in this first state until we apply another actuating signal.

The multivibrator goes through a transitional or unstable state while the plate current is being switched on in one of the tubes and off in the other tube.

The corresponding output waveform from the monostable multivibrator is a rectangular voltage pulse of definite duration that occurs only in response to an input actuating signal.

Sections 10-7 and 10-8 detail the operations of two forms of monostable multivibrator.

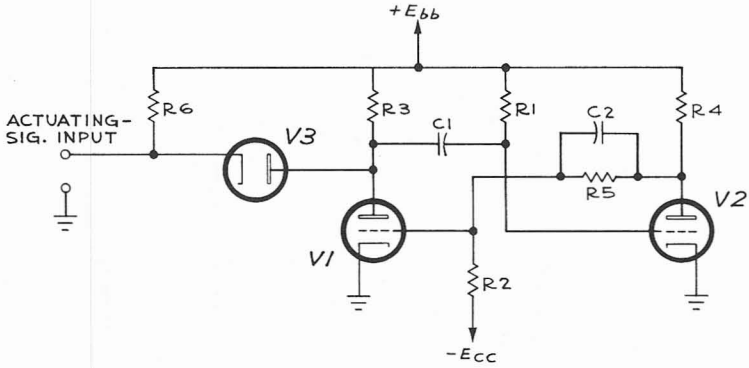

Fig. 10-8 Plate-coupled monostable multivibrator (Secs. 10-6 and 10-7). Here V_2 conducts plate current while V_1 is cut off (stable state). This condition continues until we apply a negative-going input actuating signal. The effects of this actuating signal are to switch V_1 into plate-current conduction and to cut off V_2 (quasi-stable state). After an interval that depends principally upon the time-constant R_1C_1, the multivibrator returns to its original stable state.

10-7 Plate-coupled monostable multivibrator. a. Stable state.

1. Figure 10-8 shows a plate-coupled monostable multivibrator. In the stable stage (interval AB, Fig. 10-9), the grid of V_2 is clamped at essentially ground potential (Fig. 10-9b).* Thus V_2 conducts appreciable plate current, so that the plate voltage of V_2 (Fig. 10-9c) has a value E_{b2} that is lower than the supply voltage E_{bb}. We select the voltage-divider resistors R_2 and R_5 so that the corresponding voltage at the grid of V_1 (Fig. 10-9d) is more negative than the cutoff voltage of V_1. Thus V_1 doesn't conduct plate current, so that the voltage at the plate of V_1 (Fig. 10-9e) is the supply voltage E_{bb}.

*Compare with Sec. 10-2, paragraph 2, for the case of the astable multivibrator.

2. Since the grid of V_2 is clamped at about ground potential, and since the plate of V_1 is at the supply voltage E_{bb}, capacitor C_1 is charged to approximately the supply voltage E_{bb}.

b. Switching action (unstable state, instant B).

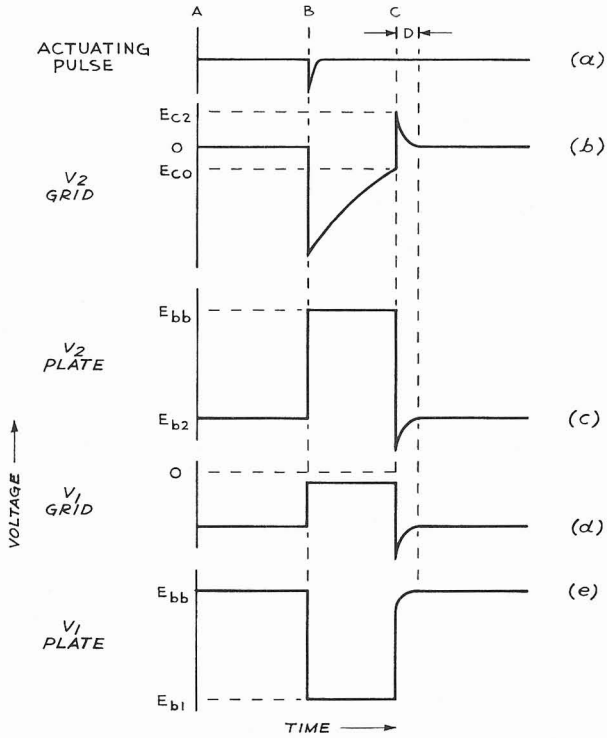

Fig. 10-9 Plate- and grid-voltage waveforms for V_1 and V_2 in Fig. 10-8 (Sec. 10-7).

3. To put the multivibrator in its quasi-stable state, we apply a negative-going actuating pulse (Fig. 10-9a) to the plate of V_1 by way of the diode V_3. C_1 applies this negative-going pulse to the grid of V_2. Thus the actuating pulse appears as a positive-going pulse at the plate of V_2. A similar positive-going pulse reaches the grid of V_1. (Note that in the stable state, the voltage divider--R_2 and R_5--sets the dc level at the grid of V_1 to a suitable value below V_1 cutoff. But the commutating capacitor C_2 applies the changing pulse voltage directly to the grid of V_1, essentially without amplitude reduction.) Therefore V_1 conducts plate current. The plate voltage of V_1 accordingly drops (instant B, Fig. 10-9e). This voltage drop also appears at the grid of V_2 (instant B, Fig. 10-9b), since the voltage across C_1 can't change instantly. Thus the plate current in V_2 decreases further, so that the voltage at the plate of V_2 rises further. Since this voltage rise reaches the grid of V_1 by way of C_2, a rapid transition occurs from plate-current conduction in V_2 to plate-current conduction in V_1.

c. Quasi-stable state (interval BC).

4. Following this transition, V_2 is cut off, so that the voltage at the plate of V_2 (interval BC, Fig. 10-9c) is now the supply voltage E_{bb}. The corresponding voltage applied to the grid of V_1 (Fig. 10-9d) by way of the voltage divider composed of R_5 and R_2 is sufficient to make V_1 conduct appreciable plate current. Therefore the voltage at the plate of V_1 (Fig. 10-9e) has a value E_{b1} that is appreciably lower than the supply voltage E_{bb}. But C_1 was originally charged to the voltage E_{bb} (paragraph 2). And since the voltage across C_1 can't change instantly, we have accordingly driven the grid of V_2 (Fig. 10-9b) considerably below cutoff. V_2 remains cut off until C_1 discharges sufficiently through R_1 to allow the voltage at the grid of V_2 to reach cutoff (interval BC, Fig. 10-9b). During this discharge interval, the multivibrator is in the quasi-stable state.

d. Switching action (unstable state, interval D).

5. When the voltage at the grid of V_2 reaches cutoff (instant C, Fig. 10-9b), V_2 again conducts plate current. The resulting voltage drop at the plate of V_2 (instant C, Fig. 10-9c) reaches the grid of V_1 by way of the voltage divider composed of R_5 and R_2. Therefore the plate current in V_1 decreases. Thus the plate voltage of V_1 rises (instant C, Fig. 10-9e), and this voltage rise reaches the grid of V_2 by way of C. This regenerative action quickly results in a transition to the stable state, with V_2 conducting plate current and with V_1 cut off.

6. At instant C, when V_2 starts to conduct, the grid of V_2 is at cut-off voltage E_{co} (Fig. 10-9b). And the plate of V_1 is at the voltage E_{b1}. Therefore, just as V_2 starts to conduct, C_1 is charged to the difference between E_{b1} and E_{co}. Now V_1 goes into cutoff so that the plate voltage of V_1 rises (instant C, Fig. 10-9e). The voltage across C_1 can't change instantly. Therefore the voltage at the grid of V_2 takes a somewhat positive value E_{c2} (Fig. 10-9b), so that appreciable current flows in the grid of V_2. This grid current provides electron flow into the right-hand terminal of C_1. A corresponding number of electrons flow from the left-hand terminal of C_1 through R_3. The resulting additional voltage drop across R_3 slows the rise of the plate voltage of V_1 (interval D, Fig. 10-9e).

7. When the plate voltage of V_1 stabilizes at the supply voltage E_{bb}, the charging current in C_1 drops off. Therefore the voltage between the cathode and the grid of V_2 (that is, the grid voltage of V_2) decreases slightly (interval D, Fig. 10-9b). But a small current still flows in the grid of V_2. This grid current flows in the large resistance of R_1, so that the grid of V_2 is clamped at essentially ground potential.

8. As described in paragraphs 6 and 7, the plate-voltage rise of V_1 drives the grid of V_2 briefly positive; then the grid of V_2 returns to a voltage near ground (interval D, Fig. 10-9b). This positive excursion of the grid of V_2 makes the plate current of V_2 quite large for a brief interval, so that the plate voltage of V_2 becomes quite low for a brief interval. This action explains the negative spike in the plate voltage of V_2 shown in interval D of

Fig. 10-9c, and the corresponding negative excursion of the grid voltage of V_1 shown in interval D of Fig. 10-9d.

To summarize, then, the quasi-stable state lasts long enough for C_1 to discharge through R_1 so that the grid of V_2 rises to cut-off voltage. After the quasi-stable state, the multivibrator goes through the transitional unstable state into the stable state. The circuit remains in the stable state until we again apply an actuating pulse. The output rectangular voltage pulse has the same duration as the quasi-stable state. We can take a positive-going output pulse either from the plate of V_2 or from the upper end of a resistor that we can connect in the cathode circuit of V_1. Or we can take a negative-going output pulse either from the plate of V_1 or from the upper end of a resistor that we can connect in the cathode circuit of V_2.

The diode V_3 can't conduct while the plate voltage of V_1 is low. Therefore actuating pulses that might otherwise be applied can't affect the multivibrator action during the quasi-stable state.

We can use the monostable multivibrator as a frequency divider. Suppose, for example, that we want the repetition frequency of the output pulses to be one-fifth the repetition frequency of the input actuating pulses. We select the circuit constants, particularly the time constant of the combination R_1C_1, so that the quasi-stable state (interval BC, Fig. 10-9) lasts a little longer than the interval occupied by four actuating pulses. Then the diode V_3 allows only every fifth actuating pulse to reach the multivibrator (when V_1 is cut off).

10-8 Stability control for the plate-coupled monostable multivibrator. We can use the monostable multivibrator of Fig. 10-8 as a gating source in a time-base system. For this purpose we need a front-panel control to adjust the multivibrator for any one of three operating conditions:

1. Triggered operation. In this mode the multivibrator operates in the manner we just studied in Sec. 10-7. That is, a negative-going input actuating signal of sufficient amplitude makes the multivibrator go through the operating cycle shown in Fig. 10-9. This multivibrator operating cycle gates the time-base generator so that the cathode-ray-tube spot moves horizontally across the screen. This operating mode is the one we use most often.

2. Free-running operation. Here we adjust the multivibrator as described below so that the multivibrator repeatedly goes through the operating cycle shown in Fig. 10-9. This operation takes place in a recurrent manner independently of any external actuating signal. Each multivibrator operating cycle gates the time-base generator so that the cathode-ray-tube spot repeatedly moves horizontally across the screen. We can use this free-running operating mode for certain somewhat special uses of the oscilloscope.

3. "Off" condition. Sometimes we want to disable the sweep--that is, we want to prevent the time-base generator from actuating the horizontal motion of the cathode-ray-tube spot. To disable the sweep, we adjust the

multivibrator as described below so that the multivibrator doesn't go through its operating cycle even though we might apply input actuating signals of any ordinary amplitude. Thus the multivibrator doesn't gate the time-base generator. And therefore the time-base generator doesn't generate the sawtooth waveform that sweeps the spot horizontally across the screen.

We refer to the control that allows us to select any one of these three operating conditions as the STABILITY control. The STABILITY control simply sets the negative dc supply voltage E_{cc} (Fig. 10-8), and thus we can use the STABILITY control to set the quiescent dc voltage at the grid of V_1.

To provide triggered operation, we set the STABILITY control to a point (usually near the middle of its range) such that the multivibrator responds to input actuating signals as described in Sec. 10-7.

For free-running operation we set the STABILITY control at or near the full-right (clockwise) position, so that E_{cc} is less negative. As a result, V_1 conducts plate current even when the multivibrator is in the "stable" state, so that we don't have to apply any input actuating signal to make the multivibrator go through the operating cycle. Consequently the multivibrator repeatedly goes through its operating cycle independently of any external actuating signal.

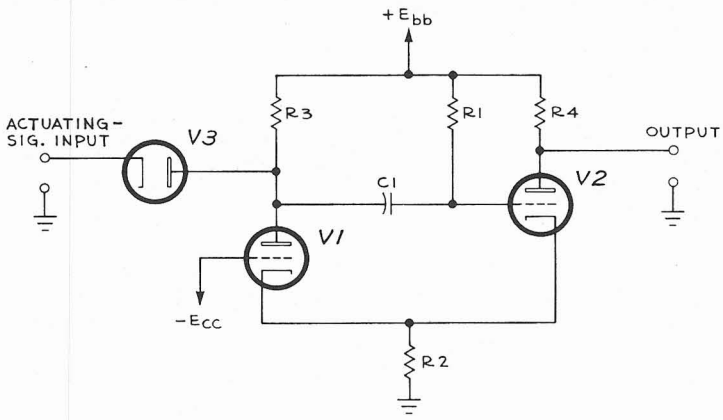

Fig. 10-10 Cathode-coupled monostable multivibrator (Secs. 10-6 and 10-9). As in the plate-coupled monostable vibrator (Fig. 10-8), V_2 conducts when the multivibrator is in its stable state, while V_1 is cut off. A negative-going input actuating signal can switch the multivibrator into its quasistable state--with V_1 conducting and V_2 cut off. After an interval that depends principally upon the time constant R_1C_1, the multivibrator returns to its original stable state.

To put the multivibrator in its "off" condition, we turn the STABILITY control full left (counterclockwise), so that E_{cc} is highly negative. Consequently V_1 doesn't conduct even when we apply an input actuating signal of any ordinary amplitude. Thus we disable the multivibrator and thereby prevent gating signals from reaching the time-base generator.

10-9 Cathode-coupled monostable multivibrator. a. Stable state.

1. Figure 10-10 shows a cathode-coupled monostable multivibrator. In the stable state (interval AB, Fig. 10-11), the grid of V_2 is clamped at essentially the cathode potential (Fig. 10-11b).* Thus V_2 conducts appreciable plate current. The resulting voltage drop across R_k places the cathodes at a potential E_{k1} (Fig. 10-11c) that is appreciably more positive than ground. And the plate voltage of V_2 correspondingly has a value E_{b2} that is lower than the supply voltage E_{bb} (Fig. 10-11d). In the stable state, the fixed external grid-bias voltage $-E_{cc}$ (Fig. 10-10) is so negative that V_1 does not conduct plate current. Thus the voltage at the plate of V_1 (Fig. 10-11e) is the supply voltage E_{bb}.

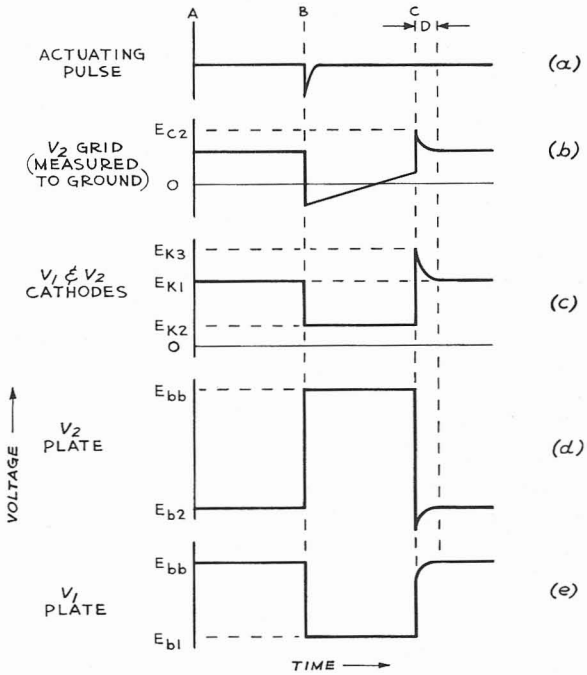

Fig. 10-11 Plate-, grid-, and cathode-voltage waveforms for V_1 and V_2 in Fig. 10-10 (Sec. 10-9).

2. Since the grid of V_2 is clamped at approximately the cathode potential E_{k1}, and since the plate of V_1 is at the supply voltage E_{bb}, capacitor C_1 is charged to approximately the supply voltage E_{bb}.

b. Switching action (unstable state, instant B).

*Compare with Sec. 10-2, paragraph 2, for the case of the astable multivibrator.

3. To put the multivibrator in its quasi-stable state, we apply a negative-going actuating pulse (Fig. 10-11a) to the plate of V_1 by way of the diode V_3. C_1 applies this negative-going pulse to the grid of V_2. Thus the plate current of V_2 decreases, so that the cathode voltage drops (instant B, Fig. 10-11c). The new cathode voltage E_{k2} is not much higher than the external bias-supply voltage $-E_{cc}$. Therefore V_1 can now conduct plate current. The plate voltage of V_1 accordingly drops (instant B, Fig. 10-11e). This voltage drop also appears at the grid of V_2 (instant B, Fig. 10-11b), since the voltage across C_1 can't change instantly. Thus the plate current in V_2 decreases further, so that the cathode voltage decreases further. Since this cathode-voltage drop further increases the current in V_1, a rapid transition occurs from plate-current conduction in V_2 to plate-current conduction in V_1.

4. Following this transition, V_2 is cut off so that the voltage at the cathodes (interval BC, Fig. 10-11c) has a value E_{k2} that is less positive than the previous stable-state cathode voltage E_{k1}. Thus V_1 conducts appreciable plate current. Therefore the voltage at the plate of V_1 (Fig. 10-11e) has a value E_{b1} that is appreciably lower than the supply voltage E_{bb}. But C_1 was originally charged to the voltage E_{bb} (paragraph 2). And since the voltage across C_1 can't change instantly, we have accordingly driven the grid of V_2 (Fig. 10-11b) considerably below cutoff. V_2 remains cut off until C_1 discharges sufficiently through R_1 to allow the voltage at the grid of V_2 to reach cutoff (interval BC, Fig. 10-11b). During this discharge interval, the multivibrator is in the quasi-stable state.

d. Switching action (unstable state, interval D).

5. At instant C (Fig. 10-11b), the voltage at the grid of V_2 reaches cutoff so that V_2 again conducts plate current. As a result, the cathode voltage rises (Fig. 10-11c). Therefore the plate current in V_1 decreases. Thus the plate voltage of V_1 rises (instant C, Fig. 10-11e), and this voltage rise reaches the grid of V_2 by way of C_1. This regenerative action quickly results in a transition to the stable state, with V_2 conducting plate current and with V_1 cut off.

6. At instant C, when V_2 starts to conduct, the grid of V_2 is at cut-off voltage--within a few volts of ground potential (Fig. 10-11b). And the plate of V_1 (Fig. 10-11e) is at the voltage E_{b1}. Therefore, just as V_2 starts to conduct, C_1 is charged to the difference between E_{b1} and the cut-off grid voltage of V_2--that is, C_1 is charged to approximately the voltage E_{b1}. Now V_1 goes into cutoff so that the plate voltage of V_1 rises (instant C, Fig. 10-11e). The voltage across C_1 can't change instantly. Therefore the voltage at the grid of V_2 takes a somewhat positive value E_{c2} (Fig. 10-11b), so that appreciable current flows in the grid of V_2. This grid current provides electron flow into the right-hand terminal of C_1. A corresponding number of electrons flow from the left-hand terminal of C_1 through R_3. The resulting additional voltage drop across R_3 slows the rise of the plate voltage of V_1 (interval D, Fig. 10-11e).

7. When the plate voltage of V_1 stabilizes at the supply voltage E_{bb}, the charging current in C_1 drops off. Therefore the voltage between the

cathode and the grid of V_2 decreases slightly (interval D, Fig. 10-11b). But a small current still flows in the grid of V_2. This grid current flows in the large resistance of R_1, so that the grid of V_2 is clamped at essentially cathode potential.

8. As described in paragraphs 6 and 7, the plate-voltage rise of V_1 drives the grid of V_2 briefly positive with respect to the cathode; then the grid of V_2 returns to a voltage near cathode potential (interval D, Fig. 10-11b). This positive excursion of the grid of V_2 makes the plate current of V_2 quite large for a brief interval. This action explains the negative spike in the plate voltage of V_2 shown in the interval D of Fig. 10-11d, and the corresponding positive excursion of the cathode voltage shown in interval D of Fig. 10-11c.

To summarize, then, the quasi-stable state lasts long enough for C_1 to discharge through R_1 so that the grid of V_2 rises to cut-off voltage. After the quasi-stable state the multivibrator goes through the transitional unstable state into the stable state. The circuit remains in the stable state until we again apply an actuating pulse. The output rectangular pulse has the same duration as the quasi-stable state. We can take an output positive-going pulse from the plate of V_2, or we can take an output negative-going pulse from the cathode terminals.

The diode V_3 can't conduct while the plate voltage of V_1 is low. Therefore actuating pulses that might otherwise be applied can't affect the multivibrator action during the quasi-stable state.

We can use the circuit of Fig. 10-10 as a frequency divider in much the same way as we can use the plate-coupled circuit of Fig. 10-8 as a frequency divider.

10-10 Bistable multivibrators.* A bistable multivibrator has two stable states:

1. A first state where V_1 conducts appreciable plate current, and where V_2 does not conduct plate current.

2. And a second state where V_1 does not conduct plate current, while V_2 conducts appreciable plate current.

When we turn the multivibrator on, the circuit assumes one or the other of these two stable states. (The multivibrator itself initially "chooses" either the first or the second stable state--based on factors such as circuit-component values, tube balance, etc.) The multivibrator remains in this initial stable state indefinitely unless we apply a suitable external actuating pulse. The actuating pulse places the multivibrator in the other stable state. Then the multivibrator remains in this second stable state indefinitely or until we apply a second suitable external actuating pulse.

*A bistable multivibrator is variously called a flip-flip, a flip-flop, or a binary.

The multivibrator goes through a transitional or unstable state while the plate current is being switched on in one tube and off in the other tube.

The corresponding output waveform from the bistable multivibrator is a rectangular voltage pulse whose duration is equal to the interval between two externally applied actuating pulses.

Sections 10-11 and 10-12 detail the operations of two forms of bistable multivibrator.

10-11 Plate-coupled (Eccles-Jordan) bistable multivibrator. a. First stable state. Figure. 10-12 shows a plate-coupled bistable multivibrator. Assume that the multivibrator is in that stable state in which V_1 conducts appreciable plate current and V_2 is cut off. In this stable state the grid of V_1 is clamped at essentially ground potential.* Since V_1 conducts appreciable plate current, the plate voltage of V_1 has a value E_{b1} that is lower than the supply voltage

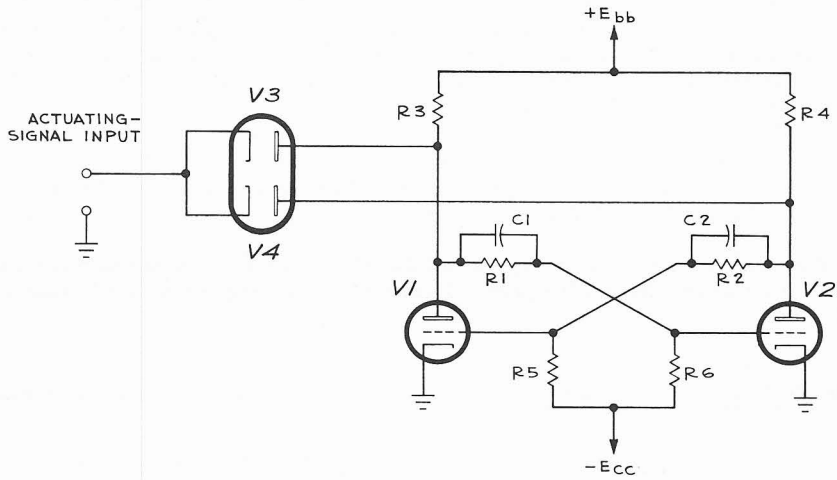

Fig. 10-12 Plate-coupled (Eccles-Jordan) bistable multivibrator (Secs. 10-10 and 10-11). Here either tube (V_1, for example), conducts plate current indefinitely while the other tube (V_2) remains cut off (first stable state). A suitable input actuating signal can switch conduction from V_1 and V_2 (second stable state). The multivibrator then remains in this second stable state until we apply a second suitable actuating signal to revert the system to its first stable state.

E_{bb}. We select the voltage-divider resistors R_1 and R_6 so that the corresponding voltage at the grid of V_2 is more negative than the cut-off voltage of V_1. Thus V_2 doesn't conduct plate current, so that the voltage at the plate of V_2 is the supply voltage E_{bb}.

*Compare with Sec. 10-2, paragraph 2, for the case of the astable multivibrator.

b. Switching action. To put the multivibrator in its other stable state, we apply a negative-going actuating pulse to the plate of V_2 by way of the diode V_4. (Since V_1 conducts appreciable plate current and the plate voltage of V_1 is therefore at a comparatively low voltage E_{b1}, diode V_3 doesn't transmit the actuating pulse.) The negative-going actuating pulse reaches the grid of V_1 by way of the commutating capacitor C_2.* Therefore the plate current in V_1 decreases. The plate voltage of V_1 accordingly rises. This voltage rise also appears at the grid of V_2, since the voltage across the commutating capacitor C_1 can't change instantly. Thus V_2 conducts plate current, so that the voltage at the plate of V_2 decreases. Since this voltage drop reaches the grid of V_1 by way of C_2, a rapid transition occurs from plate-current conduction in V_1 to plate-current conduction in V_2.

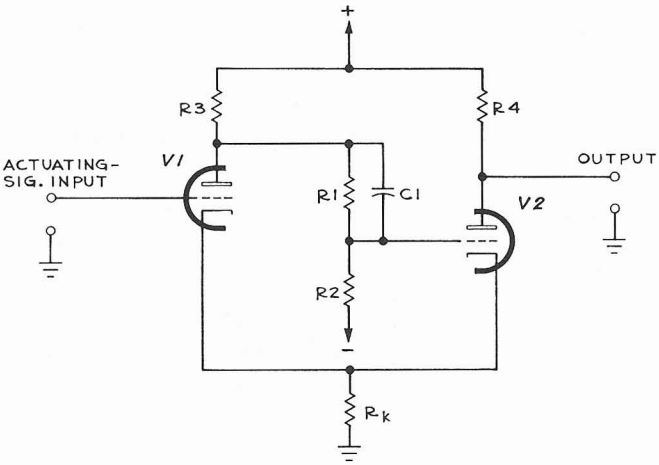

Fig. 10-13 Schmitt trigger (cathode-coupled binary). As described in Secs. 10-10 and 10-12, one tube conducts while the other remains cut off (first stable state). A suitable input actuating signal can switch conduction from one tube to the other (second stable state).

c. Second stable state. In the second stable state, V_1 is cut off while V_2 conducts appreciable plate current. Thus the voltage at the plate of V_2 has a value E_{b2} that is lower than the supply voltage E_{bb}. We select the voltage-divider resistors R_2 and R_5 so that the corresponding voltage at the grid of V_1 is more negative than the cut-off voltage of V_1. Thus V_1 remains cut off, so that the plate voltage of V_1 is the supply voltage E_{bb}. Now, since the plate of V_1 is at the high potential E_{bb} and the plate of V_2 is at the lower voltage E_{b2}, diode V_3 can transmit the next incoming negative-going actuating pulse but diode V_4 can't transmit actuating pulses. Thus the multivibrator is ready for the next actuating pulse to reverse the preceding operations--so that V_1 will next conduct plate current and V_2 will go into cutoff.

*See paragraph 3, Sec. 10-7.

10-12 Schmitt trigger (cathode-coupled binary). a. First stable state. Fig. 10-13 shows a bistable circuit called the Schmitt trigger. Assume that the voltage applied to the actuating-signal input terminals is such that V_1 conducts appreciable plate current. The resulting voltage drop across R_k places the cathodes at a potential E_{k1} that is appreciably more positive than ground. And the plate voltage of V_1 correspondingly has a value E_{b1} that is lower than the supply voltage E_{bb}. We select the voltage-divider resistors R_1 and R_2 so that the corresponding voltage at the grid of V_2 is sufficiently negative to cut off V_2 plate current. Thus the voltage at the plate of V_2 is the supply voltage E_{bb}.

b. Switching action. To put the multivibrator in its other stable state, we apply a negative-going actuating pulse to the grid of V_1. As this actuating signal makes the grid of V_1 more and more negative, the plate current in V_1 decreases. And the plate voltage of V_1 correspondingly rises, so that the actuating pulse appears as a positive-going pulse at the plate of V_1. This positive-going actuating pulse reaches the grid of V_2 by way of the commutating capacitor C_1.* As a result, plate current begins to flow in V_2. This current in V_2 causes the voltage drop across R_k to increase so that the cathode voltage rises. Therefore the plate current in V_1 decreases, so that the voltage at the plate of V_1 rises further. Since this voltage rise reaches the grid of V_2 by way of C_1, a rapid transition occurs from plate-current conduction in V_1 to plate-current conduction in V_2. Note that, in order to effect this switching action, we only have to lower the grid voltage of V_1 to the point where plate current begins to flow in V_2. The actuating signal doesn't have to go sufficiently negative to drive V_1 into cutoff. The actual switching action, once V_2 begins to conduct, is effected by the internal "loop gain" of the regenerative circuit involving V_1 and V_2.

c. Second stable state. In the second stable state, V_2 conducts a larger plate current than V_1 conducted in the first stable state. Therefore, in the second stable state, the voltage at the cathodes has a value E_{k2} that is more positive than the cathode voltage E_{k1} that existed in the first stable state. This new cathode voltage E_{k2} is sufficiently positive to keep V_1 cut off, even though the voltage at the actuating-signal input terminals might return to the original value that existed prior to the actuating pulse.

d. Switching action. To return the multivibrator to its first stable state, we can apply a positive-going actuating signal to the grid of V_1. At some instant, this actuating signal raises the grid voltage of V_1 to a point where plate current begins to flow in V_1. As a result, the voltage at the plate of V_1 decreases. This voltage drop reaches the grid of V_2 by way of C_1. Therefore the plate current in V_2 drops, so that the cathode voltage drops. This cathode-voltage drop allows V_1 to conduct more plate current, so that the voltage at the plate of V_2 falls still lower. C_1 applies this voltage fall to the grid of V_2. This regenerative action results in a rapid transition to the first stable state, with V_1 conducting and with V_2 cut off. Note that, in order to effect this switching action, we only have to raise the grid voltage of V_1 to the point where plate current begins to flow in V_1. The

*See paragraph 3, Sec. 10-7.

actuating signal doesn't have to go sufficiently positive to drop the plate voltage of V_1 to the point where V_2 cuts off. The actual switching action, once V_1 starts to conduct, is effected by the internal "loop gain" of the regenerative circuit involving V_1 and V_2.

10-13 Hysteresis in the Schmitt trigger. We noted in the previous section that

1. To change the Schmitt trigger from the first stable state (with V_1 conducting) to the second stable state (with V_2 conducting) the actuating signal must lower the grid voltage of V_1 to a voltage E_1, so that the plate voltage of V_1 rises to a point where V_2 begins to conduct.

2. And to change the Schmitt trigger from the second stable state back to the first stable state the actuating signal must raise the grid voltage of V_1 to a voltage E_2, so that V_1 starts conducting.

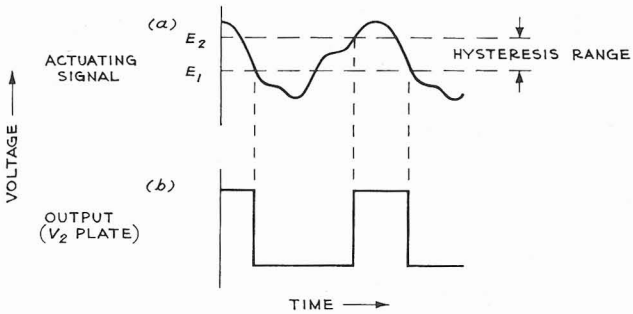

Fig. 10-14 Hysteresis in the Schmitt trigger. In Fig. 10-13, assume that V_1 conducts while V_2 is cut off (first stable state). If the input actuating signal (Fig. 10-14a, for example) drives the V_1 grid lower than some voltage E_1, then the circuit switches to its second stable state with V_2 conducting and V_1 cut off. Then, to revert the Schmitt trigger to its first stable state, the input actuating signal must drive the V_1 grid back above some second voltage E_2. We call E_1 and E_2 the "hysteresis limits" of the Schmitt trigger. And the voltage difference between E_1 and E_2 in the "hysteresis range". Figure 10-14b shows the corresponding Schmitt trigger output-signal voltage at the V_2 plate.

Further, we noted that in the second stable state the cathode voltage is higher than in the first stable state. Therefore, to change the Schmitt trigger from the second state to the first state, we have to raise the grid of V_1 to a voltage E_2 that is appreciably more positive than the V_1 grid voltage E_1 that changes the circuit from the first state to the second state. We use the term hysteresis to refer to the fact that E_1 is different from E_2. And we refer to the difference between the voltage E_1 (that is sufficiently negative to change the multivibrator from the first state to the second state) and the voltage E_2 (that is sufficiently positive to change the multivibrator back to the first state) as the hysteresis range of the multivibrator.

If, for example, we want to switch the multivibrator periodically from one state to the other and back again, we can apply some periodic actuating-voltage waveform to the grid of V_1, as shown in Fig. 10-14a. This actuating signal (including the dc level of the actuating signal) must at times rise

above the upper hysteresis limit E_2, and at other times fall below the lower hysteresis limit E_1. The resulting output voltage at the plate of V_2 is a periodic rectangular wave, as shown in Fig. 10-14b. This output wave might or might not be symmetrical (have equal durations of positive and negative portions), depending upon the waveform and the dc level or the actuating signal.

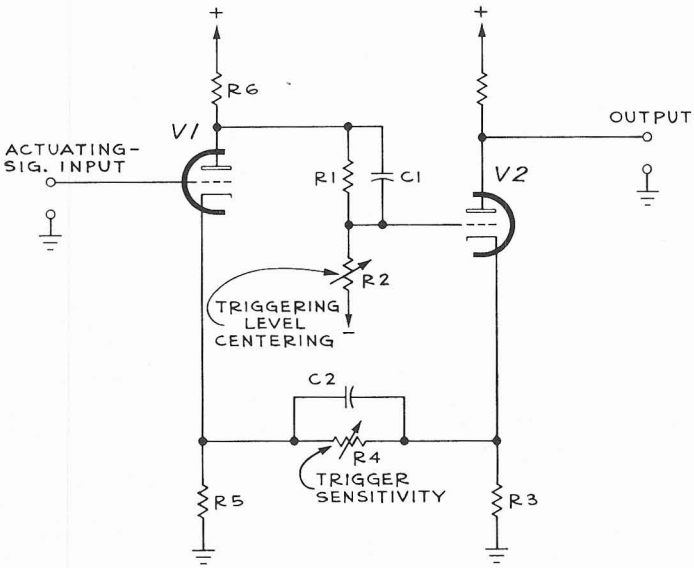

Fig. 10-15 We often want a given input actuating waveform to switch the Schmitt trigger repeatedly from its first stable state into the second stable state, and then back again to the first stable state. This action requires two things: (1) The actuating-signal peak-to-peak amplitude must at least equal the difference between the hysteresis limits E_1 and E_2 (Fig. 10-14a). (2) Furthermore, the actuating-signal dc level must be such that the actuating signal actually passes through the hysteresis limits E_1 and E_2. In Fig. 10-15, we can adjust R_2 to raise or lower the hysteresis voltage limits E_1 and E_2 simultaneously. As described in Sec. 10-14-2, we can thus accommodate the actuating-signal dc voltage level. Another circuit feature, R_4, lets us place the hysteresis limits E_1 and E_2 close together. In this way, we need only a small actuating signal to switch the Schmitt trigger back and forth between its two stable states. (In practice, the R_2 and R_4 adjustments interact.)

For some purposes we need to make the Schmitt trigger respond to actuating signals of small amplitude. If we modify the circuit as shown in Fig. 10-15, we can adjust the multivibrator so that the hysteresis range (voltage difference between E_1 and E_2) is small. In the first stable state, for instance, V_1 conducts while V_2 is cut off. Plate current in V_1 causes some given voltage drop across R_5, so that the cathode of V_1 is somewhat positive. Thus the voltage at the cathode of the nonconducting tube V_2 is established by the voltage-division ratio of R_3 and R_4. The larger we make

R_4, the lower the voltage at the cathode of V_2. We can adjust R_4 for a V_2 cathode voltage that nearly allows V_2 to conduct. Then only a small negative-going actuating signal at the grid of V_1 can raise the plate voltage of V_1 far enough to make V_2 conduct, throwing the multivibrator into the second stable state.

When V_2 conducts, with V_1 cut off, the plate current in V_2 causes some given voltage drop across R_3, so that the cathode of V_2 is somewhat positive. Thus the voltage at the cathode of the nonconducting tube V_1 is established by the voltage-division ratio of R_4 and R_5. We can adjust R_4 for a V_1 cathode voltage that nearly allows V_1 to conduct. Then only a small positive-going actuating signal at the grid of V_1 can make V_1 conduct, throwing the multivibrator back into the first stable state. A suitable adjustment of R_4 meets not only this requirement but also the requirement given in the preceding paragraph. We commonly refer to R_4 as the TRIGGER SENSITIVITY control.

The voltage-divider actions of R_3, R_4, and R_5 reduce the signal coupling between the cathodes of V_1 and V_2. But the commutating capacitor C_2 transmits varying signals readily between the cathodes so that the switching action isn't impaired.

If we adjust the trigger sensitivity control for a hysteresis range that is too small, the circuit of Fig. 10-15 might operate on small noise impulses, might operate more than once with a single input actuating signal, or might even go into oscillation. It is best not to adjust the circuit too critically--that is, not to set R_4 so that the hysteresis range is unduly small. For changes in the characteristics of tubes or components might then make the circuit unstable.

Another way we can adjust the hysteresis range, and therefore the ability of the Schmitt trigger to respond to small actuating signals, is to adjust the load resistor R_6 in the plate of V_1. We thereby control the voltage gain of V_1 and at the same time adjust the dc level at the grid of V_2 when V_1 is conducting.

10-14 Dc levels in the Schmitt trigger. To make the Schmitt trigger change from one stable state to the other, not only must the peak-to-peak amplitude of the input actuating signal be at least equal to the hysteresis range of the Schmitt trigger, but also the actuating-signal dc level must be such that the actuating signal goes through the actual hysteresis limits E_1 and E_2. There are three ways in which we can satisfy this dc-level requirement.

1. We can adjust the dc level at the output of the circuit that supplies the actuating signal to the Schmitt trigger. In this way, we can bring the dc level of the actuating signal to a value such that the varying actuating signal goes through the hysteresis limits of the Schmitt trigger. To do this, we can (a) set the output dc level of the actuating-signal source by adjusting a voltage divider in this source (Sec. 5-12). Or we can (b) adjust the grid-to-cathode bias voltage of a plate-loaded tube in the source to control the dc plate current in this tube--thus controlling the dc voltage level at the

plate-output terminal of the source. In this last method, we usually locate the grid-to-cathode bias-voltage control on the front panel and label this control as the TRIGGERING LEVEL control.

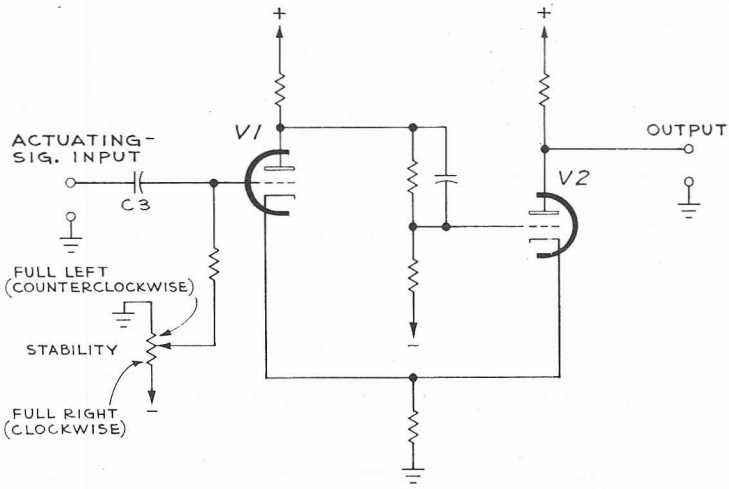

Fig. 10-16 In some cases we apply the varying actuating signal to the V_1 grid in the Schmitt trigger by way of a capacitor--for example, C_3, in Fig. 10-16. In such cases we can simply apply an adjustable dc level to V_1 grid alone, as with the STABILITY control shown here (see Sec. 10-14-3). With this STABILITY control we can put the Schmitt trigger in any one of three operating conditions: (1) the so-called "triggered" condition, where we set the STABILITY control near the middle part of its range to make the V_1 grid somewhat negative--so that a negative-going input actuating signal readily switches conduction from V_1 to V_2; or (2) the "off" condition, where we turn the STABILITY control in the left-hand part of its range to set the V_1 grid less negative--so that no actuating signal of any ordinary amplitude can actuate the Schmitt trigger; or (3) the full-right STABILITY position, where we make the V_1 grid so negative that V_1 cuts off and V_2 conducts. (When we use the Schmitt trigger as an oscilloscope time-base-controlling multivibrator--Chap. 11--this later full-right STABILITY setting--in conjunction with other circuits--results in a free-running repetitive horizontal sweep of the cathode-ray-tube spot.)

2. We can adjust the dc voltage levels within the Schmitt trigger itself. In this way we can raise or lower the general level of the hysteresis limits E_1 and E_2--so that the Schmitt trigger responds to actuating signals that are superimposed on whatever dc voltage level is present at the output of the actuating-signal source. In Fig. 10-15, the resistor R_2 allows us to make such an adjustment. When V_1 conducts, the dc voltage level at the actuating-signal source determines the amount of plate current in V_1. This plate current in V_1 in turn determines the dc voltage level at the plate of V_1. With a given dc voltage at the plate of V_1, we can now adjust R_2 so that the grid of V_2 is only a little more negative than that voltage that allows V_2 to conduct. We usually include R_2 as an internal screwdriver adjustment labeled TRIGGERING LEVEL CENTERING. We adjust this TRIGGERING LEVEL CENTERING control so that, when we set the TRIGGERING LEVEL control (see the preceding paragraph) at midrange, the Schmitt

trigger circuit responds to small actuating signals that are superimposed on the output dc voltage level of the actuating-signal source. Clearly, when we adjust the TRIGGERING LEVEL CENTERING control, this adjustment interacts with the adjustment of the TRIGGER SENSITIVITY control (Sec. 10-13). It is usually best to adjust the TRIGGERING LEVEL CENTERING control first; then adjust the TRIGGER SENSITIVITY control. Then recheck both adjustments.

3. Or we can adjust the dc level at the grid of V_1 in those cases where we apply the actuating signal to the Schmitt trigger by way of a coupling capacitor, such as C_3 in Fig. 10-16. Assume that the amplitude of the varying actuating signal is at least equal to the hysteresis range of the

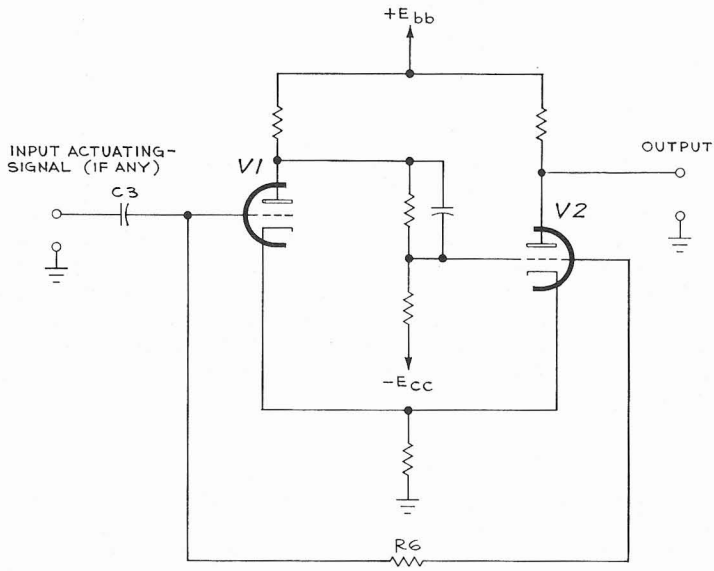

Fig. 10-17 The Schmitt trigger circuit, modified for free-running operation. As described in Sec. 10-15, when we insert R_6, we make the circuit switch back and forth between its two stable states in a free-running periodic manner. The free-running repetition frequency depends chiefly upon the time constant $R_6 C_3$. In oscilloscope triggering systems, we generally make the free-running repetition frequency about 50 cycles. Then the Schmitt trigger synchronizes readily with an incoming actuating signal whose repetition frequency lies between about 50 cycles and about 2 megacycles. We use this operation when we set the oscilloscope TRIGGERING MODE switch to AUTO. (or AUTOMATIC).

Schmitt trigger. In such a case we can apply to the grid of V_1 an adjustable dc voltage (in addition to the varying actuating signal) as shown in Fig. 10-16. In this way, we can bring the dc voltage level of the grid of V_1 to a value such that the varying actuating signal goes through the hysteresis limits of the Schmitt trigger. We usually locate the control that selects this dc voltage level on the front panel, and label this control as the STABILITY control.

10-15 Free-running form of Schmitt trigger. For some purposes we need to make the Schmitt trigger operate in a free-running manner--that is, we require the circuit to deliver a recurrent output waveform, even with no input actuating signal. To accomplish this result, we can modify the circuit as shown in Fig. 10-17, where we have added the resistor R_6. This modified circuit operates as follows.

Assume, for example, that when we apply the dc supply voltages E_{bb} and $-E_{cc}$, tube V_2 conducts plate current while V_1 is cut off. That is, the voltage at the grid of V_2 is high enough to allow plate current to flow in V_2, but the voltage at the grid of V_1 isn't high enough to allow plate current to flow in V_1. Suppose that we maintain the left-hand terminal of the coupling capacitor C_3 at some fixed dc potential. Then C_3 gradually charges through R_6 so that the voltage at the right-hand terminal of C_3 approaches the voltage at the grid of V_2. Thus the voltage at the grid of V_1 rises above the upper hysteresis voltage of the Schmitt trigger, so that V_1 conducts plate current while V_2 goes into cutoff.

When V_1 conducts plate current, the voltage at the plate of V_1 correspondingly drops. As a result, the voltage at the grid of V_2 is low. Then C_3 gradually discharges through R_6 so that the voltage at the grid of V_1 approaches the voltage at the grid of V_2. Thus the voltage at the grid of V_1 falls below the lower hysteresis voltage of the Schmitt trigger, so that V_1 again goes into cutoff while V_2 conducts plate current. We see, then, that the circuit continuously switches back and forth from one stable state to the other. The repetition frequency of this switching action depends upon the tube characteristics and circuit constants, but particularly upon the time constant of the circuit composed of R_6 and C_3.

Suppose that, instead of simply maintaining the left-hand terminal of C_3 at a fixed dc voltage, we also apply an actuating signal to that terminal. Then the actuating voltage can, at appropriate points on the switching cycle, change the voltage at the grid of V_1 above or below the hysteresis range in anticipation of the normal switching action of the free-running circuit. Thus we can synchronize the switching action of the Schmitt trigger with the repetition frequency of the actuating signal or with some multiple of the actuating frequency. We use this synchronizing action in the AUTOMATIC (or AUTO.) mode of the Schmitt trigger.

10-16 Transition time. Sometimes in a multivibrator we need a particularly rapid transition (switching action) between one state and the other. Design procedures we can use to minimize the transition time include the following.

1. We can keep the unavoidable shunt capacitances (caused by wiring, components, and tube elements) at a minimum.

2. We can keep the RC risetimes in the multivibrator circuit at a minimum by avoiding the use of unnecessarily large values of resistance in critical circuit positions in the multivibrator.

3. We can include peaking systems (Secs. 5-4 to 5-7) or cathode followers (Chap. 6) in the coupling circuits between the multivibrator tubes.

10-17 Clipping diodes in multivibrators. As we have learned, there are spikes at the corners of some waveforms generated in multivibrators. And other waveforms have rounded corners. In some circuits, excessive spikes or rounding can cause unfavorable results. To clip off these spikes or rounded corners we can insert diodes as required, in shunt with the multivibrator plate or grid circuits.

Chapter 11
HORIZONTAL-DEFLECTION SYSTEMS

In this chapter we consider complete horizontal-deflection systems. Figure 11-1 shows a block diagram of one form of horizontal-deflection system. Let's first consider briefly the purposes of the "blocks" in Fig. 11-1. Then we shall consider the system in more detail. And we shall then be prepared to study other horizontal-deflection systems.

Figure 11-1 includes waveforms that indicate the general circuit operation. For completeness, these waveforms are rather detailed. Therefore, a few of these waveforms are completely explained only later in this chapter.

11-1 Block diagram of horizontal-deflection system. a. Time-base generator. As a time-base generator the circuit of Fig. 11-1 uses a Miller runup circuit (Secs. 9-6 and 9-7) that develops a linear positive-going ramp voltage waveform.

b. Horizontal amplifier. We apply the time-base-generator ramp output voltage to the horizontal-amplifier input. The horizontal-amplifier output delivers simultaneously a positive- and a negative-going ramp voltage--that is, the horizontal amplifier delivers a push-pull version of the input ramp from the time-base generator. We apply the positive-going ramp to the cathode-ray-tube right-hand horizontal-deflection plate, and we apply the negative-going ramp to the left-hand horizontal-deflection plate. These ramp waveforms make the cathode-ray-tube spot move forward (left to right) at a constant rate across the screen.

c. Sweep-gating multivibrator. The sweep-gating multivibrator applies a negative-going gate waveform (Sec. 9-3) to the time-base generator, so that the time-base generator develops its ramp output waveform. Simultaneously the sweep-gating multivibrator applies to the cathode-ray-tube grid a positive-going unblanking waveform so that we see the forward-moving spot on the screen. As a sweep-gating multivibrator, the circuit of Fig. 11-1 uses a Schmitt trigger (Secs. 10-10 and 10-12 to 10-15).

d. Trigger multivibrator. To make the sweep-gating multivibrator develop its gate and unblanking output waveforms, we have to switch the sweep-gating multivibrator from its first stable state to its second stable state. To accomplish this result we apply to the sweep-gating multivibrator a trigger waveform from a trigger multivibrator.

In the circuit of Fig. 11-1, the trigger multivibrator generates a negative-going rectangular waveform. By means of a differentiator, we convert this negative-going rectangular waveform into a series of negative and positive spikes (Sec. 3-1). A negative-going spike actuates the sweep-gating multivibrator. The positive-going spikes serve no useful purpose; therefore in some oscilloscopes we short-circuit the positive-going spikes by means of a diode as shown in dotted lines.

e. Trigger-pickoff circuit. To achieve a stable display of a periodic waveform, we have to make each trace in the display coincide point-for-point with the preceding trace. Thus we have to start each horizontal sweep of the cathode-ray-tube spot when the displayed vertical signal goes through some fixed point on its waveform.

To accomplish this result we can actuate the trigger multivibrator with a sample of the displayed vertical waveform. We call this vertical-signal

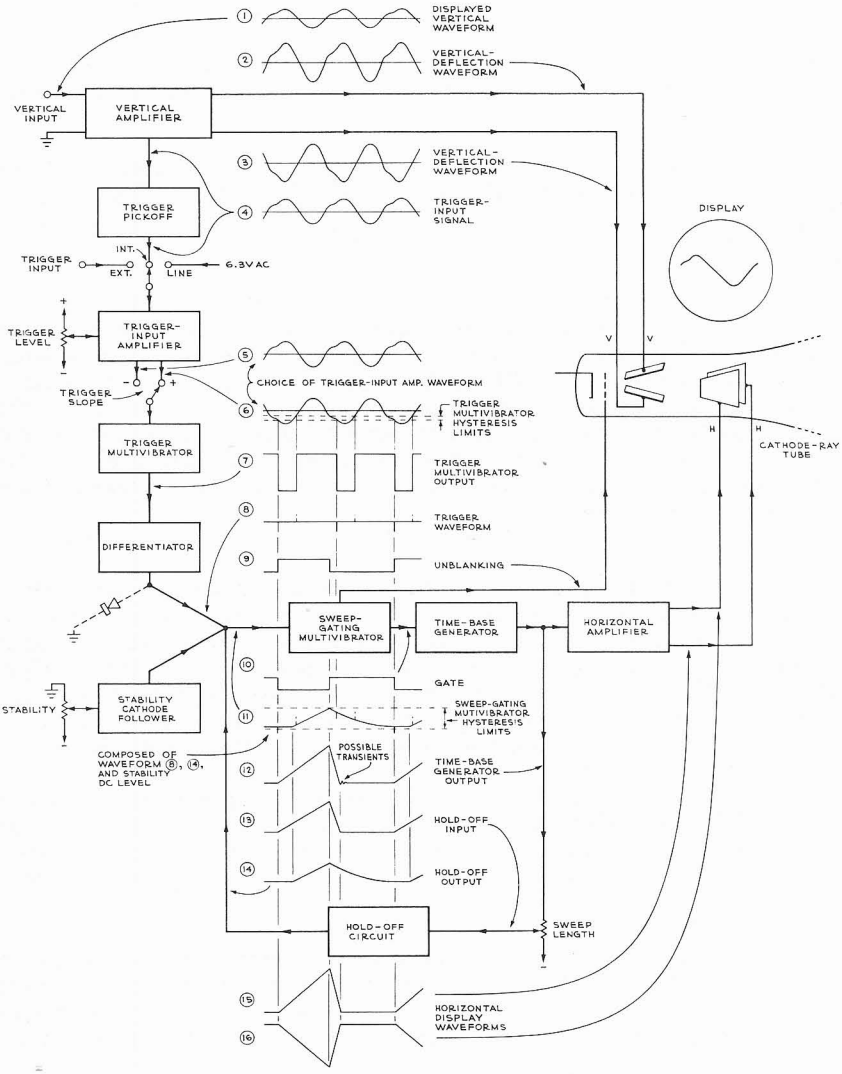

Fig. 11-1 Block diagram of a typical general-purpose laboratory oscilloscope.

sample the trigger-input signal. And we call the circuit that samples the vertical signal the trigger-pickoff circuit. The trigger-pickoff circuit does these things:

1. The trigger-pickoff circuit makes a sample of the vertical signal available as a trigger-input signal.

2. The trigger-pickoff circuit may amplify the trigger-input signal.

3. And the trigger-pickoff circuit isolates the vertical amplifier from any load changes at the trigger-pickoff-circuit output.

For a trigger-pickoff circuit, the system of Fig. 11-1 uses a cathode follower, with perhaps a preceding amplifier stage.

f. Trigger-input amplifier. Before we apply the trigger-input signal to the trigger-multivibrator input, we pass this trigger-input signal through a trigger-input amplifier (Fig. 11-1).

Besides amplifying the trigger-input signal, the trigger-input amplifier performs another function as follows. We have noted the following requirement for a stable display: We must start each horizontal sweep of the cathode-ray-tube spot when the displayed vertical signal goes through some fixed point on its waveform. We include, in the trigger-input amplifier, two controls that allow us to select this fixed trace-starting point. These controls are the TRIGGER SLOPE switch and the TRIGGERING LEVEL control. Later we shall study in detail how we can set these two controls to select the trace-starting point. For the time being, let us only mention that we can

1. Set the TRIGGER SLOPE switch so that the trigger-input-amplifier output waveform is either inverted (reversed in polarity) or not inverted.

2. And set the TRIGGERING LEVEL control to raise or lower the dc level at which the trigger-input amplifier delivers its output waveform.

For the present, then, we say simply that we set the TRIGGER SLOPE and TRIGGERING LEVEL controls so that when the displayed waveform passes through the trace-starting point that we want, then the trigger-input waveform from the trigger-input amplifier passes through a point such as to actuate the trigger multivibrator.

As an example, suppose we apply the waveform of Fig. 11-2 to the vertical input. By means of the TRIGGER SLOPE and TRIGGERING LEVEL controls we can select the trace-starting point B (Fig. 11-2a) so that the display shows the heavy-line part of the waveform shown in Fig. 11-2a. Or we can select other trace-starting points such as point C (Fig. 11-2b), point E (Fig. 11-2c), or point F (Fig. 11-2d). In each case we start the trace at a different point on the vertical waveform.

g. SWEEP LENGTH control. To make the cathode-ray-tube spot visible, and to start the forward left-to-right sweep of the spot, we generated

unblanking and sweep-gating waveforms by driving the sweep-gating multivibrator from its first stable state into its second stable state. When the cathode-ray-tube spot finishes its trace at the right-hand end of the graticule, we need to do two things:

1. We need to return the time-base-generator output voltage to its quiescent value, corresponding to a spot position at the left-hand end (start) of the graticule (ready for the next forward sweep). We can do this by removing the negative gate voltage from the time-base generator.

2. And we need to cut off the cathode-ray-tube beam so that we don't see the spot during the retrace interval, while the time-base-generator output voltage returns to its quiescent value. We can do this by removing the positive unblanking voltage from the cathode-ray-tube grid.

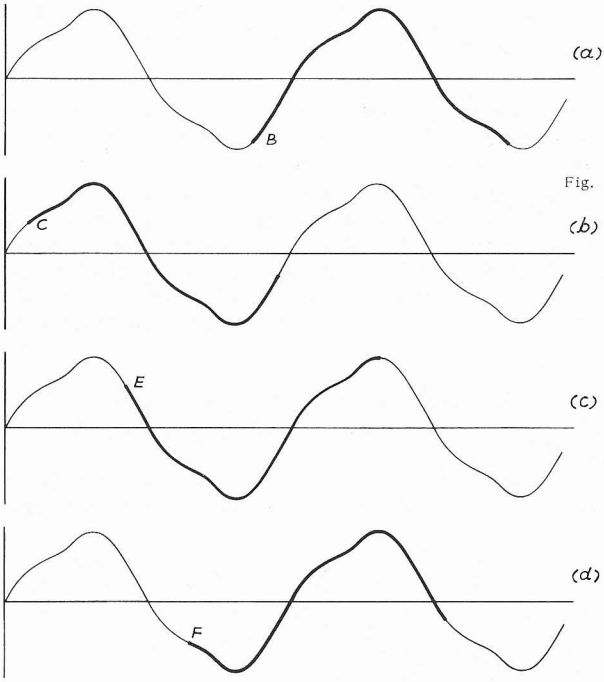

Fig. 11-2 In a manner to be described, the TRIGGER SLOPE and TRIGGERING LEVEL controls allow us to select the point on the displayed waveform at which the trace starts, at the left-hand end of the graticule. The TRIGGER SLOPE switch allows us to start the trace during the rise of the displayed waveform (waveforms a and b), or during the fall of the displayed waveform (waveforms c and d). The heavy-line portions show the actual display. The TRIGGERING LEVEL control allows us to start the trace at a low-voltage point on the displayed waveform (waveforms a and d), or at a high-voltage point on the displayed waveform (waveforms b and c).

In the circuit of Fig. 11-1, we accomplish these results by driving the sweep-gating multivibrator back into its first stable state. Thus the sweep-gating multivibrator no longer delivers its gating and unblanking output waveforms. To drive the sweep-gating multivibrator back into its first stable state we use here a sample of the time-base-generator positive-going ramp output voltage. (This ramp sample reaches the sweep-gating multivibrator by way of the hold-off circuit described below.) We set the amplitude of this ramp sample by means of the SWEEP LENGTH control. We adjust the SWEEP LENGTH control so that when the spot reaches the desired end-point on its trace, the ramp sample drives the sweep-gating

multivibrator input grid positive past its upper hysteresis limit. Thus we drive the sweep-gating multivibrator back into its first stable state.

h. Hold-off circuit. As we have just seen, the ramp sample from the SWEEP LENGTH control drives the sweep-gating multivibrator back into its first stable state. Consequently two things happen:

1. The sweep-gating multivibrator removes the unblanking voltage from the cathode-ray-tube grid so we don't see the spot during the retrace interval.

2. And the sweep-gating multivibrator removes the gating voltage from the time-base generator, so the time-base-generator output voltage returns to its quiescent value corresponding to a spot position at the left-hand end (start) of the graticule. Often the time-base-generator output voltage returns to its quiescent value much faster than the linear rise that produced the forward spot movement. (This rapid retrace voltage change might shock-excite the circuitry, producing unwanted damped-wave transients following the retrace.)

When the ramp sample from the SWEEP LENGTH control drops to its quiescent value at or near zero, the sweep-gating-multivibrator input-grid voltage drops to a value determined by the STABILITY setting (as we shall study later). Thus we make the sweep-gating multivibrator ready to start another sweep whenever another trigger waveform arrives from the trigger multivibrator. And we have no way of knowing how soon the next trigger waveform is going to arrive. To keep the display stable, we want two things to happen before the next trace starts:

1. We want the time-base generator output voltage to fall entirely to its quiescent value corresponding to a spot position at the left-hand end of the graticule.

2. And furthermore we want any transients in the system--caused by the rapid retrace voltage change--to die out.

To allow these two things to happen before a new trigger signal can actuate the sweep-gating multivibrator, we slow down the fall of the waveform we feed from the SWEEP LENGTH control to the sweep-gating-multivibrator input. We call the circuitry that slows the fall the hold-off circuit.

11-2 Brief summary of circuit functions. We can briefly summarize the functions of the horizontal-deflection system as follows:

1. The trigger-pickoff circuit delivers a sample of the displayed vertical waveform to the trigger-input amplifier.

2. The trigger-input amplifier delivers an amplified form of this displayed vertical waveform. The trigger-input amplifier includes the TRIGGER SLOPE and TRIGGERING LEVEL controls. We set these two controls so

that when the displayed vertical signal goes through the desired trace-starting point on its waveform, then the trigger-input waveform from the trigger-input amplifier simultaneously goes through the trigger-multivibrator triggering point (drives the trigger multivibrator into its second stable state).

3. When the trigger-input waveform from the trigger-input amplifier goes through the triggering point for the trigger multivibrator, then the trigger multivibrator responds with a negative-going output step. (At some later instant, the trigger-input waveform goes through a different point such as to restore the trigger multivibrator to its first stable state. Then the trigger multivibrator delivers a positive-going output step. Thus, over a period of time, the trigger multivibrator delivers a rectangular output-voltage waveform that includes both the negative and the positive output steps.)

4. The differentiator converts the trigger-multivibrator rectangular output into a series of negative and positive trigger spikes. (In some oscilloscopes we use a diode to short circuit the positive spikes, which serve no useful purpose.)

5. By means of the STABILITY control we can set the dc level at the stability-cathode-follower grid. The stability-cathode-follower output circuit correspondingly sets the dc level at the sweep-gating-multivibrator input grid. We adjust the STABILITY control so that a negative trigger spike (paragraph 4, above) can actuate the sweep-gating multivibrator (by driving the input grid down past its lower hysteresis limit). Then the sweep-gating multivibrator goes into its second stable state.

6. When a negative trigger spike thus actuates the sweep-gating multivibrator, the sweep-gating multivibrator responds by delivering (a) a positive-going unblanking step that we apply to the cathode-ray-tube grid to make the spot visible, and (b) a simultaneous negative-going step voltage that we use to gate the time-base generator.

7. The negative-going gate from the sweep-gating multivibrator makes the time-base generator start its linear positive-going ramp output.

8. The horizontal amplifier applies a push-pull version of the time-base-generator ramp output to the horizontal-deflection plates. Thus the spot moves at a constant rate across the screen.

9. The SWEEP LENGTH control applies a positive-going sample of the time-base-generator ramp output to the sweep-gating-multivibrator input grid (by way of the hold-off circuit). When this ramp sample reaches the sweep-gating-multivibrator upper hysteresis limit, the ramp sample drives the sweep-gating multivibrator back into its first stable state.

10. When the ramp sample from the SWEEP LENGTH control drives the sweep-gating multivibrator back into its first stable state, the sweep-gating multivibrator responds by removing the positive unblanking voltage from the cathode-ray-tube grid, so that we no longer see the spot. Simultaneously the sweep-gating multivibrator removes the negative gating voltage

from the time-base generator. Therefore the time-base-generator output voltage returns rapidly to its quiescent value, corresponding to a spot position at the left-hand end (start) of the graticule. We call this interval, while the time-base-generator output returns to its quiescent value, the retrace interval.

11. The hold-off circuit allows the ramp sample at the sweep-gating-multivibrator input to decay only at a relatively slow rate. Thus any further negative triggers can't actuate the sweep-gating multivibrator (a) until the time-base-generator output returns completely to its quiescent value, and (b) until any transients, caused by the rapid time-base-generator output retrace, have died out.

11-3 Detailed operation of horizontal-deflection system. Let's consider the horizontal-deflection system of Fig. 11-1 in more detail. This study not only familiarizes us with the system of Fig. 11-1, which is typical of the horizontal-deflection systems in many oscilloscopes. In addition, this study points up many "standard" problems concerning horizontal-deflection systems in general--so that we prepare ourselves to understand other horizontal-deflection systems as well. Our aim here is to understand the circuit functions. For actual adjustments of the internal controls in a specific type of oscilloscope, follow the Instruction Manual or separate calibration procedure.

a. Trigger pickoff. Figure 11-3 shows details of the system that Fig. 11-1 presents in block form. In Fig. 11-3, we apply a sample of the displayed vertical waveform (from the vertical amplifier) to the trigger-pickoff cathode follower V1223B. We can use the output of V1223B to drive the trigger-input amplifier (see Selecting the triggering-signal source below). Further, the output of V1223B drives a second cathode follower, V1223A. Thus we can use the output from V1223A, available at the front-panel VERT. SIG. OUT connector, as a sample of the displayed waveform. (Circuits including V1223B and V1223A don't include peaking; therefore the high-frequency response of the circuit driving the VERT. SIG. OUT connector is limited. Further, V1223A is ac-coupled by C1228 to the VERT. SIG. OUT connector, so that the low-frequency response at the VERT. SIG. OUT connector doesn't extend down to dc.)

b. Selecting the triggering-signal source. In the horizontal-deflection system of Fig. 11-3, we can use the front-panel TRIGGER SLOPE switch to select the triggering-signal source:*

1. In perhaps the majority of cases we use as a triggering signal the vertical-waveform sample (see Trigger pickoff above). To select the vertical-waveform sample as the triggering signal, we set the TRIGGER SLOPE switch to -INT. or +INT.

*As we learned in Sec. 11-1f the TRIGGER SLOPE switch helps us to select the trace-starting point on the displayed waveform. But at the moment let's consider only the other TRIGGER SLOPE switch function--that is, to select the triggering-signal source.

2. If we want to display the power-line waveform, or some waveform that has a time relation to the power-line waveform, we can use as a triggering signal a sample of the power-line waveform. To select the power-line-waveform sample as the triggering waveform, we set the TRIGGER SLOPE switch to -LINE or +LINE.

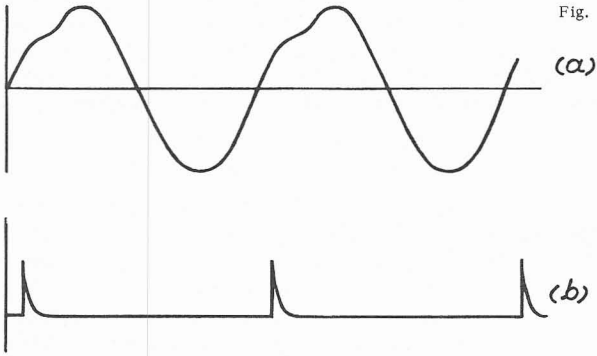

Fig. 11-4 Here a source generates two waveforms a and b that have a fixed time relationship to each other. We might display waveform a by applying that waveform to the oscilloscope vertical-input connector. But if we wish we can use waveform b as a triggering waveform, by applying that waveform to the TRIGGER INPUT connector and setting the TRIGGER SLOPE switch to +EXT. or -EXT.

3. The source that generates the waveform we want to display sometimes also delivers a second waveform that has a time relation to the displayed waveform. For example, suppose some source delivers the waveforms of Fig. 11-4a and b. If we want to display the waveform of Fig. 11-4a, we might advantageously use the waveform of Fig. 11-4b as a triggering signal--since this second waveform includes precisely timed, rapidly changing portions that can actuate the triggering system at accurately spaced intervals. To use as a triggering signal a waveform other than the displayed waveform or the power-line waveform, we apply the triggering signal to the front-panel TRIGGER INPUT terminal and set the TRIGGER SLOPE switch to -EXT. or +EXT.

c. Dc or ac triggering-signal coupling. To select either dc-coupling or ac-coupling for the triggering signal, we can set the front-panel TRIGGERING MODE switch:

1. If the triggering signal we use is a slowly changing signal, we might improve triggering reliability (and therefore trace stability) if we dc-couple the triggering signal into the trigger-input amplifier. To dc-couple the triggering signal, we set the TRIGGERING MODE switch to DC.

2. For triggering signals that change at moderate or fast rates, we can ac-couple the triggering signal into the trigger-input amplifier. To ac-couple the triggering signal, we can set the TRIGGERING MODE switch to AC (or, on some oscilloscopes, to AC SLOW). In Fig. 11-3, we thus introduce the series trigger-coupling capacitor C10. Note that the time constant of the trigger-input-amplifier input circuit now involves C10 and R12.

3. If we use a dual-trace plug-in preamplifier, we might find that channel-switching voltages interfere with stable triggering. To prevent this instability

we can impede the channel-switching voltages from the triggering circuits by reducing the time constant of the trigger-input-amplifier input circuit. Thus only rapidly changing triggering signals can reach the triggering circuits, while the slower channel-switching transients can't. To reduce the time constant of the trigger-input-amplifier input circuit, we can set the TRIGGERING MODE switch to AC LF REJECT (or, on some oscilloscopes, AC FAST). In Fig. 11-3, we thus introduce the small series trigger-coupling capacitor C11 and in addition we connect R13 in shunt with R12. (But if either displayed waveform changes only slowly, this short-time-constant circuit might not adequately transmit the corresponding vertical-signal sample that we use as a triggering waveform.)

Or, we might sometimes set the TRIGGERING MODE switch to AC LF REJECT (or AC FAST) for this purpose: to block any low-frequency interference that might exist on the triggering waveform--in this case, we improve trace stability.

IMPORTANT

Keep in mind the special purposes of the AC LF REJECT (or AC FAST) mode that we have just mentioned. In most cases the AC (or AC SLOW) mode is better than the AC LF REJECT (or AC FAST) mode.

Later we shall consider the AUTO. and HF SYNC functions of the TRIGGERING MODE switch.

d. Trigger-input amplifier. The trigger-input amplifier applies an amplified version of the triggering signal to the trigger-multivibrator input, to start the horizontal sweep of the cathode-ray-tube spot. The trigger-input amplifier includes the TRIGGER SLOPE and the TRIGGERING LEVEL controls, by which we can select the trace-starting point (the point on the displayed waveform at which the trace begins at the left-hand end of the graticule). Let us now see how we can use the TRIGGER SLOPE and TRIGGERING LEVEL controls to select the trace-starting point.

e. Selecting a trace-starting point on the positive-slope region of the displayed waveform. We recall that to actuate the trigger multivibrator (and thus start the horizontal sweep of the cathode-ray-tube spot) we must drive the trigger-multivibrator input grid down past its lower hysteresis limit (Sec. 10-13). Suppose, for example, that we display the recurrent waveform of Fig. 11-5a. We can use the trigger-pickoff sample of this waveform itself as a triggering signal, by setting the TRIGGER SLOPE switch to +INT. or -INT. (Fig. 11-3).

Suppose we want the trace to start (at the left-hand end of the graticule) at some point on the rising (positive-slope) region *AD* of the waveform of Fig. 11-5a. Thus the trigger-pickoff sample of this displayed waveform must drive the trigger-multivibrator input grid down past its lower hysteresis limit, during the rise of the displayed waveform. Therefore we must invert

the trigger-pickoff sample before we apply the sample to the trigger-multivibrator input grid, as shown in Fig. 11-5b. To do this, we set the TRIGGER SLOPE switch to +INT., so that we apply the trigger-pickoff vertical-waveform sample to the grid of V24B. Now V24B operates as a simple plate-loaded amplifier (Chap. 5) so that an inverted vertical-waveform sample appears at the plate of V24B (Fig. 11-5b). In this way we can start the horizontal sweep of the cathode-ray-tube spot while the displayed waveform is rising.

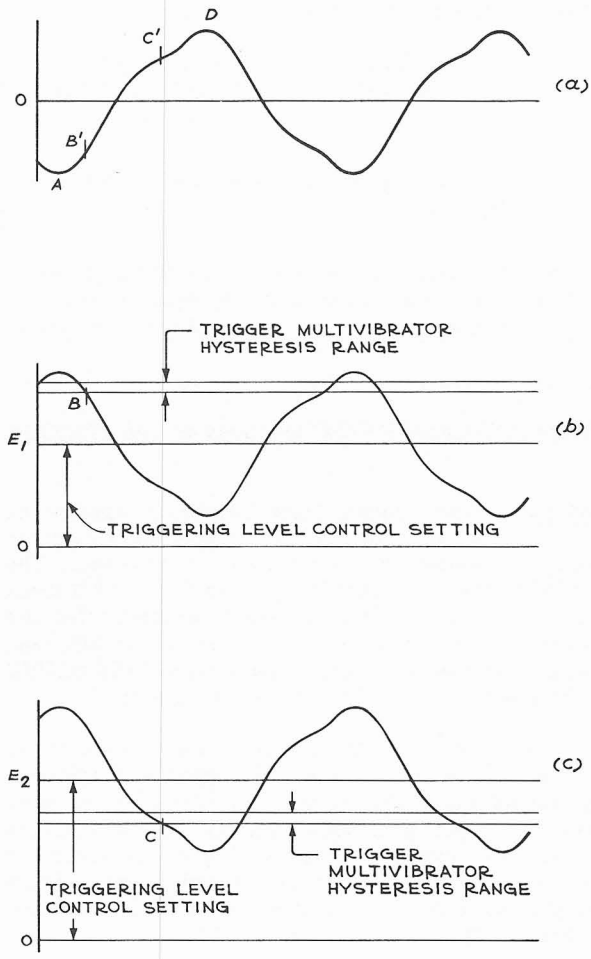

Fig. 11-5 Assume that we display the waveform a, and that we set the TRIGGER SLOPE switch to one of the INT. positions. Thus we apply a sample of the displayed waveform a to the trigger-input amplifier. If we set the TRIGGER SLOPE switch to +INT., the trigger-input-amplifier varying output waveform is an inverted form of waveform a, as shown in drawings b and c. By means of the TRIGGERING LEVEL control, we can adjust the dc voltage level associated with this trigger-input-amplifier output waveform. When we set the TRIGGER SLOPE switch to a + position, and when we turn the TRIGGERING LEVEL control toward the + part of its range, we add only a relatively small dc level E_1 to the trigger-input - amplifier varying output waveform (drawing b). Then this varying waveform actuates the trigger multivibrator (by passing downward through the trigger-multivibrator lower hysteresis limit) at a high-voltage point on waveform b. In this way we start the trace at a relative low-voltage point B' on waveform a. But if we set the TRIGGERING LEVEL control toward the - part of its range, we add a relatively large dc level E_2 to the trigger-input-amplifier varying output waveform (drawing c). Then this varying waveform actuates the trigger multivibrator (by passing downward through the trigger-multivibrator lower hysteresis limit) at a low-voltage point on waveform c. In this way we start the trace at a relatively high-voltage point C' on waveform a.

To select a particular trace-starting point on the rise of the displayed waveform of Fig. 11-5a, we must select the instant when the amplified trigger-pickoff sample from the trigger-input amplifier (Fig. 11-5b) drives

the trigger-multivibrator input grid down past its lower hysteresis limit. To do this we can raise or lower the entire trigger-input-amplifier output waveform on the graph. That is, we can adjust the dc level at which we apply the trigger-pickoff sample to the trigger-multivibrator input grid. For example, suppose we apply this triggering sample to the trigger-multivibrator grid at a dc level of E_1 volts (Fig. 11-5b). Then at instant B the triggering sample passes downward through the trigger-multivibrator lower hysteresis limit, starting the sweep. Therefore the display starts (at the left-hand end of the graticule) at point B' (Fig. 11-5a).

But if we change the triggering-sample dc level to a new voltage E_2 (Fig. 11-5c) then the triggering sample passes downward through the trigger-multivibrator lower hysteresis limit at a new instant C, starting the sweep. Therefore the display starts (at the left-hand end of the graticule) at point C' (Fig. 11-5a).

Thus to select the height of the trace-starting point (at the left-hand end of the graticule), we can set the dc voltage level at the trigger-input-amplifier output. We can set the dc level at this point by means of the TRIGGERING LEVEL control. Recall that we have set the TRIGGER SLOPE switch to +INT. Figure 11-3 shows that the TRIGGERING LEVEL control now sets the grid voltage of V24A, and therefore controls the plate current in V24A. Thus the TRIGGERING LEVEL setting influences the voltage at the cathodes of V24A and V24B. In turn, this cathode voltage affects the grid-to-cathode bias voltage of V24B. And the grid-to-cathode bias of V24B sets the dc plate current in V24B. The corresponding voltage drop across R25 establishes the dc voltage level at the plate of V24B (trigger-input-amplifier output). Thus we can use the TRIGGERING LEVEL control to set the trigger-input-amplifier output dc level and therefore to select the height of the trace-starting point at the left-hand end of the display.

f. Selecting a trace-starting point on the negative-slope region of the displayed waveform. Suppose now we want the trace to start at some point on the falling (negative-slope) region DG of the waveform of Fig. 11-5a (redrawn in Fig. 11-6a). Thus the trigger-pickoff sample of this displayed waveform must drive the trigger-multivibrator input grid down past its lower hysteresis limit, during the fall of the displayed waveform. Therefore, as shown in Fig. 11-6b, we do not invert the trigger-pickoff sample before we apply this sample to the trigger-multivibrator input grid. To accomplish this result, we set the TRIGGER SLOPE switch to -INT., so that we apply the trigger-pickoff vertical-waveform sample to the grid of V24A. Now V24A and V24B operate as a cathode-coupled amplifier (Sec. 7-1) so that the output at the plate of V24B is not inverted. In this way we can start the horizontal sweep of the cathode-ray-tube spot while the displayed waveform is falling.

To select a particular trace-starting point on the fall of the displayed waveform of Fig. 11-6a, we adjust the dc level at which we apply the trigger-pickoff sample to the trigger-multivibrator input grid. For example, suppose we apply this triggering sample to the trigger-multivibrator grid at a dc level of E_1 volts (Fig. 11-6b). Then at instant E the triggering sample passes downward through the trigger-multivibrator lower hysteresis limit,

starting the sweep. Therefore the display starts (at the left-hand end of the graticule) at point E' (Fig. 11-6a).

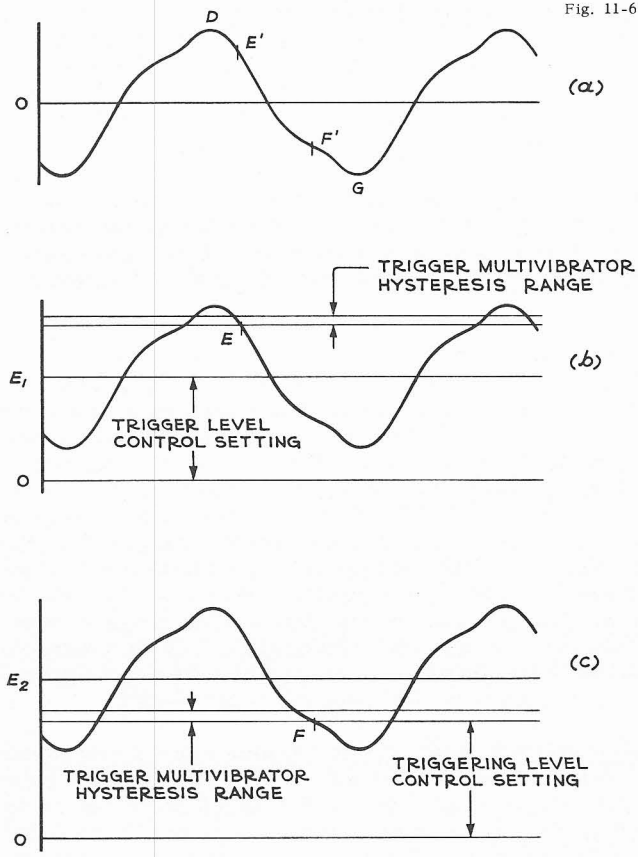

Fig. 11-6 Again assume that we display waveform a, and set the TRIGGER SLOPE switch to one of the INT. positions. If we set the TRIGGER SLOPE switch to -INT., the trigger-input-amplifier varying output waveform is an uninverted form of waveform a, as shown in waveforms b and c. When we set the TRIGGER SLOPE switch to a - position, and when we set the TRIGGERING LEVEL control toward the - part of its range, we add only a relatively small dc level E_1 to the trigger-input-amplifier varying output waveform (drawing b). Then this varying waveform actuates the trigger multivibrator (by passing downward through the trigger-multivibrator lower hysteresis limit) at a high-voltage point on waveform b. In this way we start the trace at a relatively high-voltage point E' on waveform a. But if we set the TRIGGERING LEVEL control toward the + part of its range, we add a relatively large dc level E_2 to the trigger-input-amplifier varying output waveform (drawing c). Then this varying waveform actuates the trigger multivibrator (by passing downward through the trigger-multivibrator lower hysteresis limit) at a low-voltage point c. In this way we start the trace at a relatively low-voltage point F' on waveform a.

But if we change the triggering-sample dc level to a new voltage E_2 (Fig. 11-6c) then the triggering sample passes downward through the trigger-multivibrator lower hysteresis limit at a new instant F, starting the sweep. Therefore the display starts (at the left-hand end of the graticule) at point F' (Fig. 11-6a).

Recall that we have set the TRIGGER SLOPE switch to -INT. Figure 11-3 shows that the TRIGGERING LEVEL control now sets the grid voltage of V24B. And this grid voltage of V24B sets the dc plate current in V24B. The corresponding voltage drop across R25 establishes the dc voltage level at the plate of V24B (trigger-input-amplifier output). Thus, again, we can use the TRIGGERING LEVEL control to select the height of the trace-starting point at the left-hand end of the display.

g. Trigger multivibrator. As we have noted, the trigger multivibrator in the circuit of Fig. 11-3 is a Schmitt trigger. We can set the voltage range between the hysteresis limits (ability of the trigger multivibrator to respond to small input signals) by means of the internal TRIG. SENS. control (Sec. 10-13).*

Furthermore we want to adjust the trigger multivibrator so that, when we set the front-panel TRIGGERING LEVEL control to zero (midrange), the trigger multivibrator responds to triggering waveforms passing through the middle of the dc-level range. For this adjustment we use the internal TRIGGERING LEVEL CENTERING control (Sec. 10-14, paragraph No. 1).

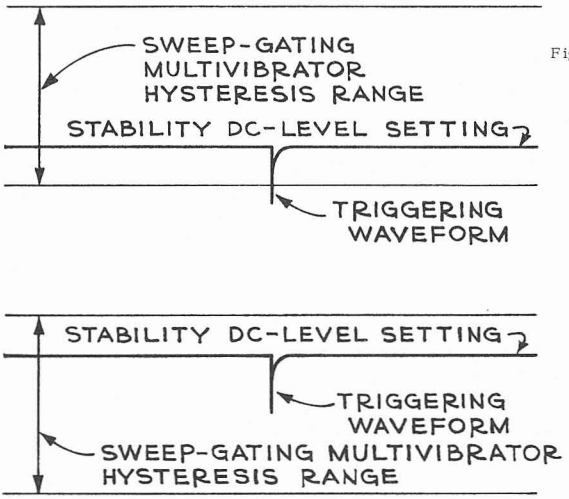

Fig. 11-7 In drawing a, we have set the STABILITY control so that the dc level at the sweep-gating-multivibrator input grid is just a little above the sweep-gating-multivibrator lower hysteresis limit. Thus an input negative-going trigger spike can drive this grid below the lower hysteresis limit, thereby starting a sweep (triggered time-base operation). But if we set the STABILITY control farther left, we raise the dc level at the sweep-gating multivibrator input grid, as shown in drawing b. Then an input negative-going trigger spike can't drive this grid below the lower hysteresis limit; consequently no sweep occurs.

When we set the TRIGGERING MODE switch to AUTO. (or, on some oscilloscopes, AC AUTO. or AUTOMATIC), we thereby connect the trigger multivibrator as a free-running Schmitt trigger (Sec. 10-15). With this arrangement the free-running trigger multivibrator can synchronize with incoming triggering signals from the trigger-input amplifier. Thus we can achieve stable displays of recurrent waveforms in the repetition-frequency range from about 60 cycles (and often considerably lower) to about 2 megacycles. When we set the TRIGGERING MODE switch to AUTO., we ac-couple the trigger-input-amplifier output to the trigger multivibrator by way of C31. Therefore when we use the AUTO. mode we don't have to adjust the TRIGGERING LEVEL control.

h. Differentiator. In the circuit of Fig. 11-3, we use an *RC* differentiator (Chap. 3) to convert the trigger-multivibrator rectangular-wave output

*It is easy to adjust the TRIG. SENS. control for too great a trigger-multivibrator sensitivity. Such an "oversensitive" adjustment leads to trace instability, particularly as tube characteristics change with aging.

into a series of negative and positive spikes. We use the negative spikes to actuate the sweep-gating multivibrator. Many oscilloscopes include a diode (V131) to short-circuit the unnecessary positive spikes.

i. Sweep-gating multivibrator. In Fig. 11-3, the sweep-gating multivibrator is a Schmitt trigger. To speed up the sweep-gating-multivibrator transition time (Sec. 10-16) we include the cathode vollower V135B to reduce the shunt-capacitance loading at the plate of V135A. To shorten the transition time further, we include the bootstrap capacitor C134 (Sec. 6-10). (Many oscilloscopes use a shunt-peaking inductor in the plate of V135A instead--see Sec. 5-5).

The STABILITY control (working through the stability cathode follower V133A) allows us to set the dc level at the sweep-gating-multivibrator input grid. In this way we can set the dc level so that an incoming negative-going trigger spike can drive the sweep-gating multivibrator into the second stable state (Sec. 10-14, paragraph No. 3), thus starting a horizontal sweep of the cathode-ray-tube spot. See Fig. 11-7.

When a negative trigger spike from the differentiator drives the sweep-gating multivibrator from its first stable state into the second stable state, V135A stops conducting. The resulting voltage rise at the plate of V135A appears at the cathode of V135B. We apply this voltage rise as an unblanking waveform to the cathode-ray-tube grid, by way of the cathode follower V183B. We also provide a sample of the unblanking waveform at the front-panel +GATE terminal, by way of the cathode follower V193A.

In this second stable state of the sweep-gating multivibrator, V145 conducts plate current. We apply the resulting voltage drop at the plate of V145 as a negative gating waveform to the time-base generator.

j. Time-base generator. The negative gating waveform from the sweep-gating multivibrator reaches the plates of the disconnect diodes (runup on-off diodes) V152 in the time-base generator. Therefore diodes V152 stop conducting plate current. Thus the Miller runup circuit involving V161 and V173 generates a positive-going ramp output voltage waveform (see Secs. 9-6 and 9-7). We use this ramp waveform to drive the horizontal amplifier. In addition, we provide a similar ramp output at the front-panel SAWTOOTH OUT terminal, by way of the cathode follower V193B.

To set the rate at which the time-base-generator positive ramp output voltage rises, we can select values for the timing capacitor C160 and the timing resistor R160. For various horizontal-sweep rates, we can switch in various amounts of timing capacitance and timing resistance by means of the TIME/CM switch (timing switch) as shown in Fig. 11-8.

For some purposes, we might want an (uncalibrated) sweep rate different from any calibrated rate available on the TIME/CM switch. For these purposes, we can use the VARIABLE TIME/CM control shown in Fig. 11-8. This control allows us to set the voltage at the lower end of the timing resistor to values other than -150 volts. Thus, for any given TIME/CM switch setting, we can change the charging current in the timing capacitor.

Thus we can continuously adjust the sweep rate, achieving rates between the fixed calibrated steps provided on the TIME/CM switch.

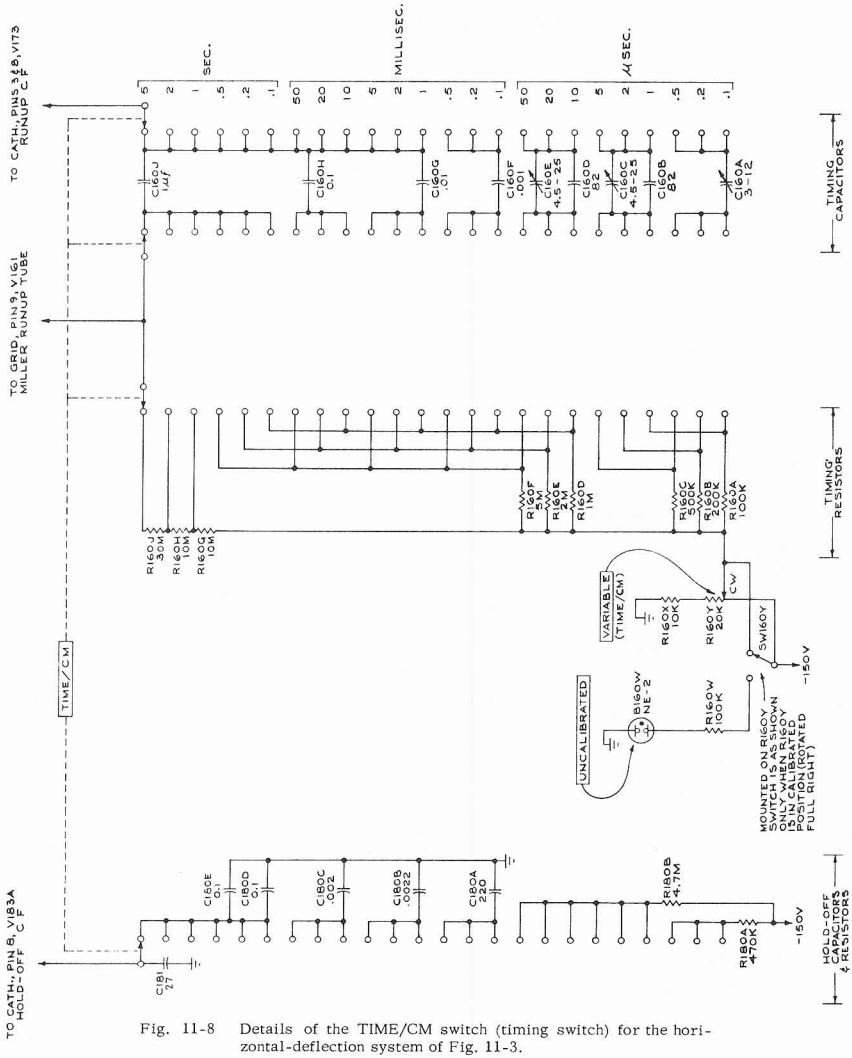

Fig. 11-8 Details of the TIME/CM switch (timing switch) for the horizontal-deflection system of Fig. 11-3.

IMPORTANT

To avoid errors in your time readings, remember that the horizontal sweep rate has the calibrated rate indicated on the TIME/CM switch only when you turn the VARIABLE TIME/CM control full right--so that the front-panel UNCALIBRATED lamp is extinguished.

k. Hold-off circuit. The internal SWEEP LENGTH control provides an adjustable-amplitude sample of the time-base-generator output waveform. We apply this ramp sample by way of the hold-off circuit to the sweep-gating multivibrator input grid. When the ramp sample rises past the sweep-gating-multivibrator upper hysteresis limit, the sweep-gating multivibrator returns to its first stable state. As a result, the sweep-gating multivibrator removes the negative gating voltage from the time-base generator so that the time-base-generator output voltage "retraces" to its quiescent value, corresponding to a spot position at the left-hand end of the graticule. At the same time the sweep-gating multivibrator removes the positive unblanking voltage from the cathode-ray-tube grid so that we don't see the spot during the retrace interval.

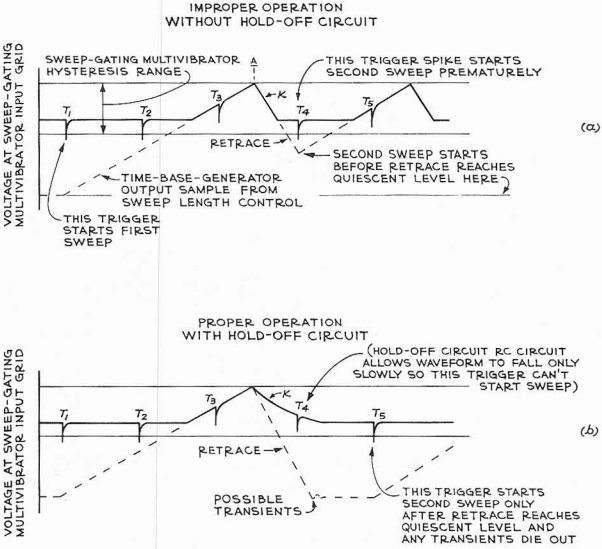

Fig. 11-9 At the end of a sweep, the SWEEP LENGTH control output sample of the time-base-generator ramp output waveform drives the sweep-gating-multivibrator input grid to the upper hysteresis limit (instant *A* in drawing a), thereby ending the sweep. The time-base-generator output voltage rapidly drops toward its quiescent value, as indicated in interval *K* of the SWEEP LENGTH control output sample of this waveform. Thus, a new triggering waveform T_4 might prematurely start a new sweep as shown, before the time-base-generator output voltage has returned to its quiescent value corresponding to a spot position at the left-hand end of the graticule and before any resulting transients die out. But in drawing b, the hold-off-circuit time constant prevents the sweep-gating-multivibrator input-grid voltage from dropping too rapidly; thus triggering spikes such as T_4 can't actuate the multivibrator prematurely.

Suppose that, as the time-base-generator output voltage returns toward its quiescent value, the ramp sample from the SWEEP LENGTH control also returns rapidly to its quiescent value (see interval *K*, Fig. 11-9a). As a result a new incoming negative trigger spike (T_4, Fig. 11-9a) from the differentiator can actuate the sweep-gating multivibrator--thus prematurely starting a new sweep at a spurious starting point to the right of the left-hand end of the graticule. For a repetitive displayed waveform, the resulting new trace won't appear directly on top of the preceding trace. In other words, this premature new sweep blurs the display. Therefore, we don't want a new sweep to start until the time-base-generator output has returned entirely to its quiescent value, corresponding to a spot position at the left-hand end of the graticule. In fact, we don't want any new sweep to start until any transients in the horizontal-deflection system, caused

by the rapid retrace voltage change, have died out. Therefore we include a time-constant circuit made up of the hold-off capacitor C180 and the V183A cathode resistor R181 (Fig. 11-3). While the ramp sample in the hold-off circuit rises, the cathode of V183A can raise the voltage across this time-constant circuit rapidly--at the same time charging C180. But when the time-base-generator output sample from the SWEEP LENGTH control drops toward its quiescent value, the charge in C180 can leak off only through R181. Consequently the hold-off-circuit output waveform can fall only according to an *RC* discharge curve (Chap. 2) as shown in interval *M*, Fig. 11-9b. Therefore the sweep-gating-multivibrator input-grid voltage drops comparatively slowly. Thus a new negative trigger wave T_4 from the differentiator can't drive the sweep-gating-multivibrator input grid down past its lower hysteresis limit until the time-base-generator output falls to its quiescent value and any transients have died out.

Suppose we set the TIME/CM switch for a slower horizontal trace (larger timing capacitor and/or resistor). Then the succeeding retrace interval tends to increase (while the timing capacitor discharges through the timing resistor). Thus, for slower sweep rates, we need longer hold-off intervals. To provide appropriate hold-off intervals for various sweep rates, we provide contacts on the TIME/CM switch to introduce various hold-off capacitors and resistors in addition to C180 and R181 (see Fig. 11-8).

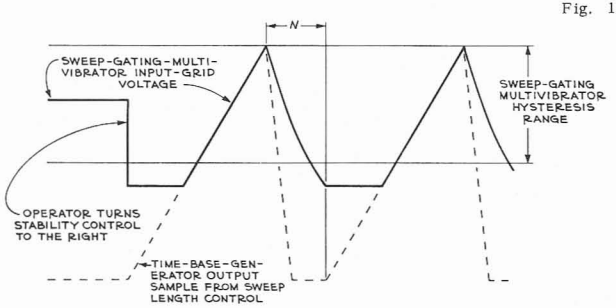

Fig. 11-10 Free-running time-base-system operation. Here we set the STABILITY control well to the right (clockwise). Then after each sweep the sweep-gating-multivibrator input grid returns to the low dc level set by the STABILITY control--a dc level below the lower hysteresis limit. Therefore a new sweep occurs immediately, even if we don't apply any input triggering waveform. Consequently the time-base system generates a periodic sawtooth output waveform in a free-running manner.

1. Free-running sweep. Suppose we set the STABILITY control (Fig. 11-3) at or near the full-right (clockwise) end of its range. In this way we can set the sweep-gating-multivibrator input dc level to a relatively large negative voltage below the sweep-gating multivibrator lower hysteresis limit (Fig. 11-10). Thus we actuate the sweep-gating multivibrator and start a sweep. When the resulting ramp sample from the SWEEP LENGTH control rises to the sweep-gating-multivibrator upper hysteresis limit, the sweep-gating multivibrator returns to its first stable state, stopping the sweep. Consequently the hold-off output voltage drops toward its quiescent value. When this hold-off output voltage drops below the sweep-gating-multivibrator lower hysteresis limit (interval *N*, Fig. 11-10), the sweep-gating multivibrator returns to its second stable state--starting a new sweep. Thus, if we turn the STABILITY control into the right-hand part of its range, then the system comprising the sweep-gating multivibrator, the disconnect

diodes, the time-base generator, and the hold-off circuit operates in a free-running manner. In this way we can use the oscilloscope to generate sawtooth waveforms (available at the SAWTOOTH OUT terminal) and simultaneous positive rectangular waveforms (available at the +GATE terminal). To set the repetition frequency of these waveforms, we can use the TIME/CM switch as a coarse repetition-frequency control; and we can use the VARIABLE TIME/CM control as a fine frequency control. We can also use the STABILITY control as a fine frequency control, since the STABILITY setting controls the interval *N* (Fig. 11-10).

m. How to adjust the STABILITY control. The free-running time-base-system operation just described gives us a useful indication in adjusting the STABILITY control for triggered time-base operation.

HOW TO SET THE STABILITY CONTROL

1. We turn the STABILITY control full right, placing the stability-cathode-follower output voltage below the sweep-gating-multivibrator lower hysteresis limit (Fig. 11-11a). Thus the time-base system free runs, as just described. Therefore we see an unstable display of the vertical-input waveform on the cathode-ray-tube screen. If, incidentally, trigger signals are arriving from the differentiator they appear superimposed on the sweep-gating-multivibrator grid-input waveform as shown in Fig. 11-11a.

2. To set the STABILITY control, we want to see the effects of the STABILITY adjustments alone with no trigger input to the sweep-gating multivibrator. Therefore we turn the TRIGGERING LEVEL control full right or full left where no trigger-input waveform of any ordinary amplitude can actuate the trigger multivibrator. Thus (Fig. 11-11b) no trigger signals appear at the sweep-gating-multivibrator input grid.

3. If we now turn the STABILITY control slowly to the left, we raise the stability-cathode-follower output voltage to a value somewhat above the sweep-gating-multivibrator lower hysteresis limit (Fig. 11-11c). Here the time-base system no longer free runs and the display disappears.

4. Now, to achieve a stable display, we turn the TRIGGERING LEVEL control slowly toward its center (0) position so that the trigger-input waveform again actuates the trigger multivibrator. When the resulting trigger waveforms actuate the sweep-gating multivibrator we observe a stable display. The waveform at the sweep-gating-multivibrator grid is that of Fig. 11-9b.

Many oscilloscopes include an internal PRESET ADJUST stability control. As a factory or maintenance adjustment, we can set this PRESET ADJUST control for triggered operation of the sweep-gating multivibrator as just described. In most such oscilloscopes we can switch the PRESET ADJUST control into the circuit (in place of the front-panel STABILITY control) by turning the front-panel STABILITY control full left to actuate a switch. In other oscilloscopes the PRESET ADJUST control comes into play only when we turn the TRIGGERING MODE switch to the AUTOMATIC mode.

n. HF SYNC mode. When we display a repetitive waveform whose frequency is several megacycles, we can sometimes use the free-running sweep operation to advantage. To do this, we set the TRIGGERING MODE switch to the HF SYNC position. In this HF SYNC position, the TRIGGERING MODE switch bypasses the trigger-input amplifier and the trigger multivibrator (Fig. 11-3), applying the "triggering" signal directly to the sweep-gating multivibrator input grid. Then, starting with the STABILITY control full right, we can turn the STABILITY control slowly toward the left until we synchronize the free-running time-base-generator output waveform with the "triggering" signal. In this way we can achieve a stable display.

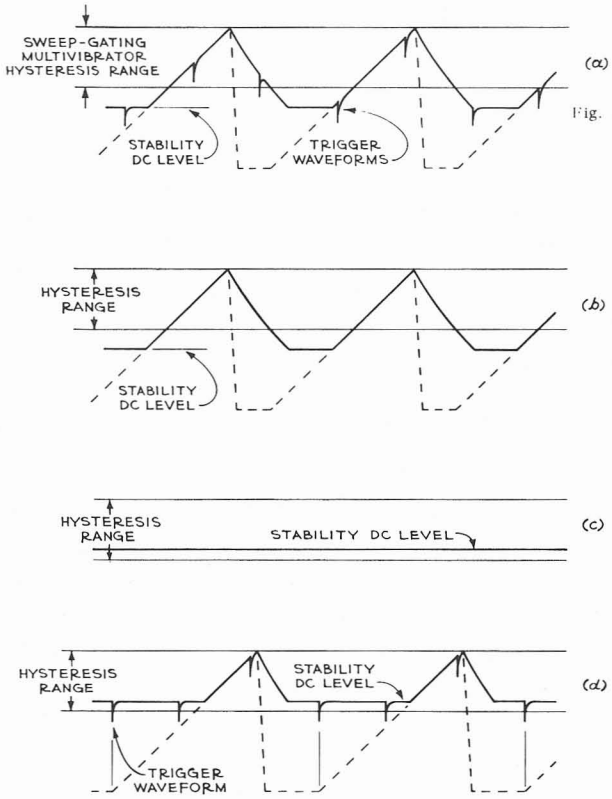

Fig. 11-11 Illustrating the theory of how we set the STABILITY control for triggered time-base-system operation. In drawing a, we set the STABILITY control for free-running operation, as previously described. The resulting sawtooth output waveform has no specific time relation to the input triggering spikes. In drawing b we eliminate the triggering spikes, by turning the TRIGGERING LEVEL control full right or full left so that any ordinary input - signal amplitude won't actuate the triggering multivibrator. In drawing c we turn the STABILITY control sufficiently to the left to raise the sweep-gating-multivibrator input-grid dc level a little above the lower hysteresis limit, thereby stopping the free-running sweep. In drawing d we turn the TRIGGERING LEVEL control toward its center position so that input trigger spikes appear; these spikes actuate the time-base system in a specific time relation to the displayed waveform.

o. Using a dual-trace plug-in unit. Suppose our oscilloscope includes the horizontal-deflection system of Fig. 11-3, and suppose that we use a dual-trace plug-in vertical preamplifier unit.* When we set the plug-in-unit mode switch for ALTERNATE sweeps, we need to drive the plug-in unit with a negative-going pulse to switch traces after each horizontal sweep. In Fig. 11-3, when the sweep-gating multivibrator goes back to its first stable state and thus ends the sweep, both the plate current and

*Such as the Type 53C, Type 53/54C, or Type CA.

the screen current in V145 cut off. We differentiate this screen-current drop with LR149 (see Fig. 3-10b), to produce a positive-going pulse. We apply this positive-going pulse to the grid of an amplifier tube, V154A. The circuitry shown in Fig. 11-3 ordinarily keeps the plate of V154A negative and the cathode positive, so that this tube doesn't conduct plate current. But when we insert the dual-trace plug-in preamplifier into the oscilloscope, the plug-in-unit circuitry itself applies plate and cathode voltages that put V154A into plate-current conduction. Now, with V154A conducting, this tube serves as a plate-loaded amplifier to deliver (at connector terminal No. 16) an inverted (negative-going) version of the input pulse from the screen of V145. This negative-going pulse switches the dual-trace plug-in unit trace at the end of each sweep--providing alternate displays of two different vertical-input waveforms.

But if we use the dual-trace plug-in unit in the CHOPPED mode (rather than the ALTERNATE mode), the display might show spurious transients that occur when the plug-in unit switches from one trace to the other. We can blank these spurious switching transients from the display as follows: When the dual-trace plug-in unit switches from one trace to the other, the plug-in-unit trace-switching multivibrator delivers a negative-going pulse to connector terminal No. 16 in Fig. 11-3. Amplifier V154B delivers an inverted (positive-going) version of this pulse. We can operate a switch (not shown) at the back of the oscilloscope to apply this positive-going pulse to the cathode-ray-tube cathode. In this way we can blank out the spurious trace-switching transients from the display.

p. Horizontal amplifier. To apply the time-base-generator output waveform to the horizontal-amplifier input, we set the HORIZONTAL DISPLAY switch (Fig. 11-3) to NORM. (or to 5X MAG.). For the moment, assume we set the HORIZONTAL DISPLAY switch at NORM. Along with the time-base-generator output waveform, we apply to the horizontal-amplifier input the horizontal-positioning voltage that we control with the HORIZONTAL POSITION and VERNIER controls. To get both of these voltages to the horizontal-amplifier input at an appropriate reference dc level, we use a long-tailed voltage divider (Sec. 5-12). For the upper section of this voltage divider we use R330, while the lower section consists of the HORIZONTAL POSITION and VERNIER controls along with their associated resistors.

Cathode follower V343A applies the time-base-generator sawtooth output (and dc positioning voltage) to the grid of another cathode follower, V343B. (We shall shortly take up the purpose of the resistance-capacitance network that connects these two tubes.) The output from V343B drives a paraphase circuit (Sec. 7-5) using V364A and V384A, that delivers a push-pull version of the time-base-generator output sawtooth waveform. We apply this push-pull horizontal-deflection waveform, by way of cathode followers V364B and V384B, to the cathode-ray-tube horizontal-deflection plates. These cathode-follower circuits include bootstrap capacitors C364 and C384 (Sec. 6-10) to improve the horizontal-amplifier response at the faster sweep rates.

The cathode of V364B drives the left-hand horizontal-deflection plate. This deflection plate should go negative linearly during the forward trace.

But for fast sweeps, when V364B cathode tries to drive this deflection plate rapidly negative, the deflection-plate capacitance and circuit capacitance tend to distort the ideal linear deflection ramp into an *RC*-discharge curve, spoiling the sweep linearity. To help V364B drive the left-hand deflection plate negative, we use V398 instead of a cathode resistor for V364B. And we apply to the grid of V398 a sample of the positive-going deflection waveform from the right-hand deflection plate. We apply this sample by way of the small capacitance C390, so that a significant part of the sample reaches V398 grid only at fast sweep rates. The corresponding inverted (negative-going) waveform at the plate of V398 helps drive the left-hand deflection plate negative at fast sweep rates.

q. Negative-feedback loop. We apply the negative-going output horizontal-deflection waveform to the upper end of R355. From a simplified viewpoint, we can consider R355 and its associated resistors as the upper part of a voltage divider. When we set the HORIZONTAL DISPLAY switch to NORM., the lower part of the divider consists of R348, R349, and the internal output impedance of the cathode follower stage that includes V343A. In this way we apply a sample of the output negative-going horizontal-deflection waveform to the grid of V343B. (The amplitude of this sample depends upon the voltage-division ratio of the "voltage divider" we just mentioned.) Thus the part of the circuit that includes V343B, V364, and V384 acts as a negative-feedback amplifier. Although this negative-feedback effect reduces the amplifier voltage gain, the negative feedback improves the linearity of the amplifier. Furthermore, since the amplifier and feedback system are dc-coupled, the negative feedback stabilizes the dc voltage levels in the amplifier.

r. 5X MAGNIFIER. The 5X MAG. provision increases the sweep rate (originally set by the TIME/CM switch) by a factor of five. To accomplish this result we increase the horizontal-amplifier voltage gain by a factor of five. And to get this added gain we reduce the amount of negative feedback (Sec. 11-3q). Specifically, when we set the HORIZONTAL DISPLAY switch to the 5X MAG. position, we remove R348 and R349 from the lower section of the negative-feedback voltage divider at the grid of V343B. Thus we reduce the negative feedback by applying a smaller negative-feedback voltage from the output cathode follower V364B to the grid of V343B.

s. Internal gain adjustments. The MAG. GAIN control sets the gain of the amplifier stage involving V364A and V384A. This gain control functions in the manner of a variable gain control as described in Sec. 7-6. Before we adjust the MAG. GAIN control, we set the HORIZONTAL DISPLAY switch to 5X MAG. so that the additional gain control (the SWP. CAL control, a part of the feedback divider we mentioned in Sec. 11-3q) doesn't affect the over-all gain. We set the TIME/CM control for a moderate sweep rate and adjust the MAG. GAIN control so that displayed time markers from an external time-mark generator show that the horizontal sweep rate is five times the TIME/CM setting. Then we can set the HORIZONTAL DISPLAY switch to NORM. and adjust the SWP. CAL. control so that displayed time marks show that the horizontal sweep rate equals the TIME/CM setting.

t. NORM./MAG. REGIS. adjustment. Suppose that, when we set the HORIZONTAL DISPLAY switch to NORM., a certain part of the displayed waveform occupies the middle two centimeters of the display horizontally to occupy the entire graticule length.

But when we turn the HORIZONTAL DISPLAY switch from NORM. to 5X MAG. we remove R348 and R349 from the horizontal-amplifier circuit. Thus we might change the dc voltage levels, so that a given point on the display might not register at the graticule horizontal center for both the NORM. and 5X MAG. positions of the HORIZONTAL DISPLAY switch. To correct such a registration error, we set the HORIZONTAL DISPLAY switch to 5X MAG. and use the HORIZONTAL POSITION control to center some part of the display (such as a specific mark in a time-mark train) horizontally on the graticule. Then we set the HORIZONTAL DISPLAY switch to NORM. and set the NORM./MAG. REGIS. control to center again the same time mark horizontally on the graticule. This method works by making the horizontal-amplifier internal dc levels the same for both the NORM. and the 5X MAG. positions of the HORIZONTAL DISPLAY switch.

u. External horizontal amplifier. Suppose we want to use some externally generated waveform, instead of the linear time-base-generator output waveform, to deflect the cathode-ray-tube beam horizontally. To do this we can apply the external horizontal-deflection waveform to the oscilloscope front-panel HORIZ. INPUT terminal (Fig. 11-3), and set the HORIZONTAL DISPLAY switch to EXT. In this way we apply the external horizontal-deflection waveform to the input of the cathode follower V303A which drives the cathode-coupled amplifier V314 (see Sec. 7-1). And when we set the HORIZONTAL DISPLAY switch to EXT. we also connect the output circuit of this cathode-coupled amplifier to the horizontal-amplifier input. For external horizontal-deflection waveforms of moderate amplitude, we set the HORIZONTAL AMPLIFIER switch to EXT. X1 so that we apply the incoming horizontal-deflection waveform directly to the grid of V303A. For large-amplitude external horizontal-deflection waveforms, we set the HORIZONTAL AMPLIFIER switch to EXT. X10, thus inserting a 10-to-1 compensated voltage divider in the input circuit of V303A.

To adjust the amount of deflection produced by the external horizontal-deflection waveform we can use the front-panel EXTERNAL HORIZ. ATTEN. control, which functions in the manner of a VARIABLE gain control (Sec. 7-6). We can adjust the internal EXT. HORIZ. DC BAL. control so that the trace doesn't shift noticeably sidewise when we turn the EXTERNAL HORIZ. ATTEN. control (Sec. 7-6).

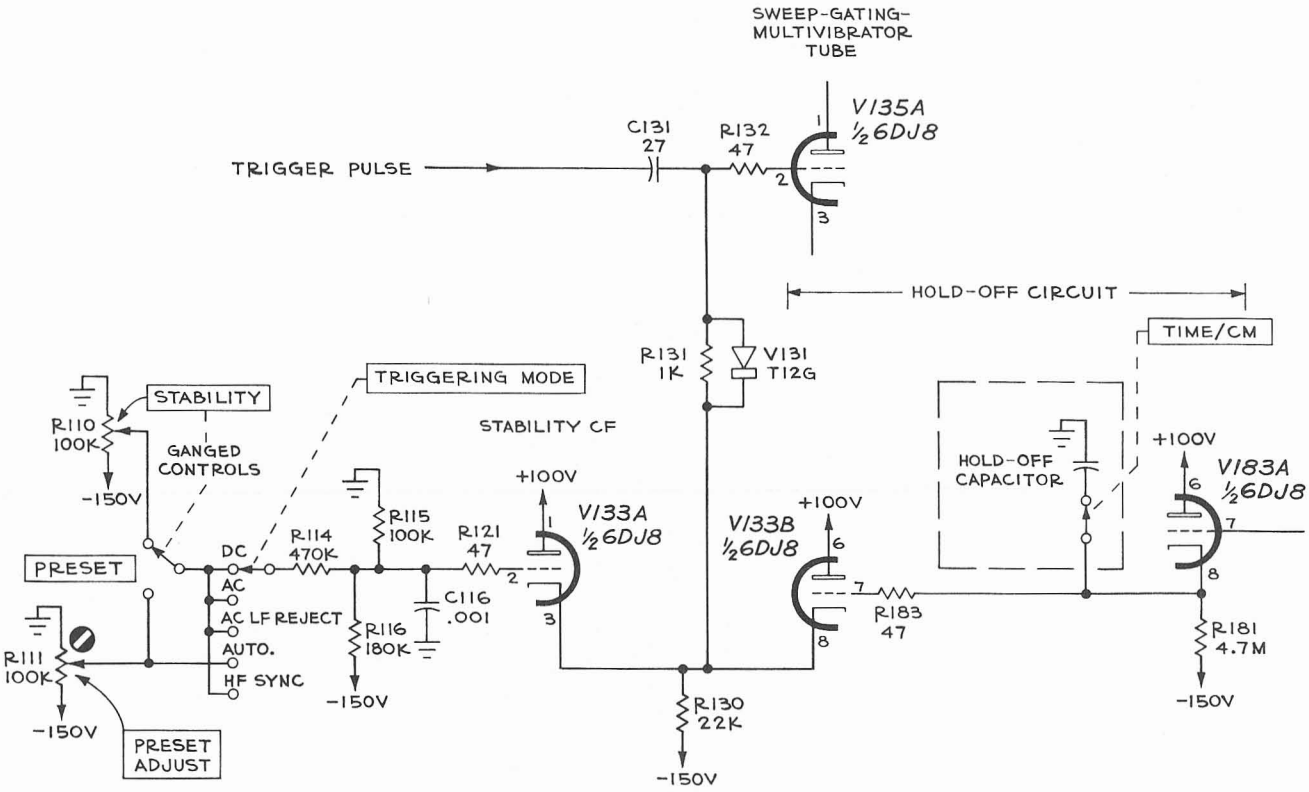

Fig. 11-12 The STABILITY control and stability cathode follower, from the circuit of Fig. 11-3 (redrawn here for comparison with Fig. 11-13).

IMPORTANT

The frequency response and risetime of the combined horizontal amplifier and external horizontal amplifier are usually more limited than in the case of the vertical-deflection system. Thus the horizontal-amplifier output amplitude drops off for rapidly changing waveforms. Don't try to make up for this reduced output by applying too large an input signal or by advancing the EXTERNAL HORIZ. ATTEN. control too far. That is, if you use a high-frequency or rapidly changing external horizontal-deflection waveform, don't try to get full-graticule-length displays--you will probably drive the horizontal-amplifier tubes into compression (Sec. 5-15) and thus distort the display. See your Instruction Manual.

11-4 Single-sweep feature. In some oscilloscopes, one or more further features are added to the basic horizontal-deflection system of Fig. 11-3. These additional features can include: (1) the single-sweep feature, (2) the delayed-trigger feature, and (3) the delayed-sweep feature. In horizontal-deflection systems that include these features, we can select these additional features by means of the HORIZONTAL DISPLAY switch.

Single-sweep operation is very useful for certain operations. Basically, when we use the single-sweep feature, the time-base system operates as follows: After the time-base system causes a sweep, no further sweeps can occur until we operate the front-panel RESET control.

The single-sweep feature is fundamentally a modification of the stability-cathode-follower circuit. The stability-cathode-follower circuit in the horizontal-deflection system we have been studying is redrawn in Fig. 11-12. Figure 11-13 shows this stability-cathode-follower circuit changed to include the single-sweep feature.

For what we can call "normal" time-base operation--as described in preceding sections of this chapter--we turn the HORIZONTAL DISPLAY switch to the TIME BASE A* position in Fig. 11-13. Then V133A lacks plate voltage so that this tube effectively isn't in the circuit. And V125 operates as a straightforward stability cathode follower as we have previously studied.

Suppose we turn the HORIZONTAL DISPLAY switch to the "A" SINGLE SWEEP** position so that we apply plate voltage to V133A. Now V125 and V133A operate in a Schmitt-trigger circuit (Secs. 10-10 and 10-12 to 10-15). We call this Schmitt trigger the lockout multivibrator (or trigger-gate generator). When the lockout multivibrator is in the first stable state, V133A is cut off and V125 conducts. Thus when the multivibrator is in this first stable state, V125 still acts as a simple stability cathode follower.

*Or MAIN SWEEP NORMAL on some oscilloscopes.

**Or MAIN SWEEP DELAYED on some oscilloscopes.

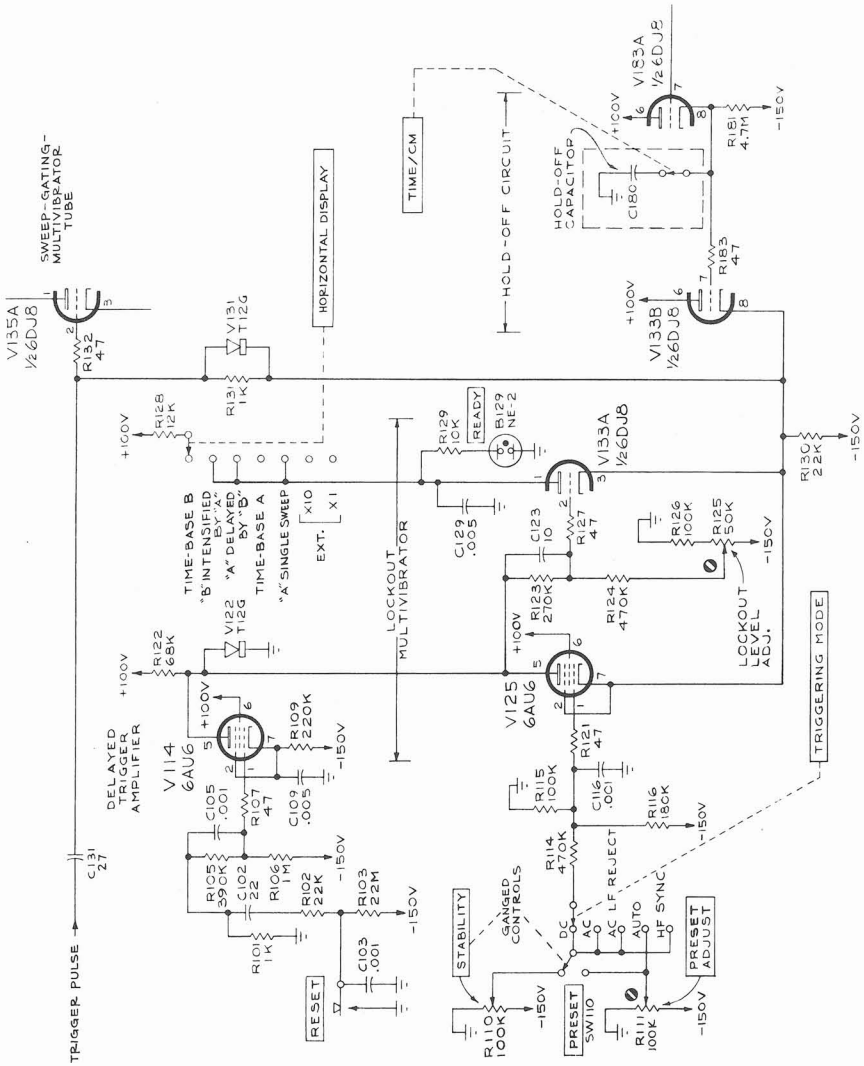

Fig. 11-13 The stability circuitry of Fig. 11-12, modified to provide the single-sweep feature. When we set the HORIZONTAL DISPLAY switch to TIME BASE B, TIME BASE A, or EXT., we remove the plate voltage from V133A. Thus V125 operates as a simple stability cathode follower, in the manner of V133A in Fig. 11-12. When in Fig. 11-13 we set the HORIZONTAL DISPLAY switch to "B" INTENSIFIED BY "A," or "A" DELAYED BY "B," or "A" SINGLE SWEEP, we apply plate voltage to V133A. Then V125 and V133A operate as a Schmitt trigger. V133A normally conducts, holding the sweep-gating-multivibrator input grid at a relatively high dc level so that no sweeps can occur. But when we operate the RESET push-button, we thereby cut off V133A and make V125 conduct as described in the text. V125 again acts as a stability cathode follower. Therefore the dc level at the sweep-gating-multivibrator input grid is simply that level established by the STABILITY control.

When the lockout multivibrator is in the second stable state, V133A conducts while V125 is cut off. But while the lockout multivibrator is in this second stable state, V133A conducts more plate current than V125 conducts while the multivibrator is in the first stable state. Thus, while the lockout multivibrator is in the second stable state, the current in V133A causes a relatively large voltage drop across the common-cathode resistor R130. The resulting relatively positive cathode voltage, applied to the sweep-gating-multivibrator input grid (V135A), is so high that incoming negative trigger spikes from the differentiating capacitor C131 can't actuate the sweep-gating multivibrator. Therefore there can be no sweeps while the lockout multivibrator is in the second stable state (V133A conducting).

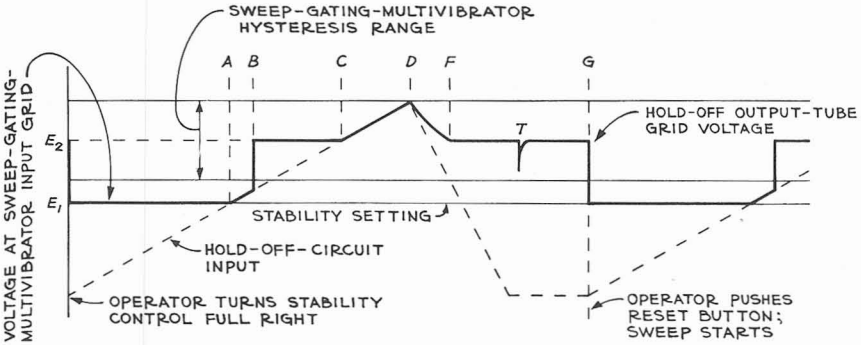

Fig. 11-14 Composite waveform at the sweep-gating-multivibrator input grid during single-sweep operation. Assume that we have already operated the RESET pushbutton, thus starting a sweep. The broken line indicates the rising ramp sample from the SWEEP LENGTH control. At instant *B* this ramp voltage at the cathodes of V125 and V133A (Fig. 11-13) switches the lockout multivibrator into its quiescent stable state with V133A conducting. Thus the sweep-gating-multivibrator input-grid voltage rises to E_2. At instant *D* the SWEEP LENGTH output ramp sample switches the sweep-gating multivibrator into its first stable state with V135A conducting. Therefore the sweep ends and the sweep-gating-multivibrator input-grid voltage drops to E_2 along a curve determined by the hold-off-circuit time constant (interval *DF*, Fig. 11-14). E_2 is a relatively positive voltage; therefore even an incoming trigger spike such as *T* can't drive the sweep-gating-multivibrator input grid below the lower hysteresis limit to start a new sweep. But if we operate the RESET button again (instant *G*), we thereby switch the lockout multivibrator into its second stable state with V125 conducting. Therefore the sweep-gating-multivibrator input-grid voltage drops to the stability dc level E_1. Since E_1 is below the sweep-gating-multivibrator lower hysteresis limit, a new sweep starts.

Let us follow the single-sweep circuitry through an operating cycle, referring to Figs. 11-13 and 11-14. At the start, suppose the lockout multivibrator is in its first stable state with V125 conducting and V133A cut off. For the time being suppose we turn the STABILITY control full right, to what is ordinarily the "free-run" position. Thus we set the sweep-gating multivibrator input-grid voltage at a value E_1, below the lower hysteresis limit (Fig. 11-14). Thus the sweep-gating multivibrator goes into its second stable state so that a sweep occurs. Figure 11-14 shows the hold-off output sample of the corresponding time-base-generator output waveform.

At instant A the hold-off output-tube (V133B) grid voltage rises above the V125 grid voltage set by the STABILITY control. Then the voltage at the cathode of V133B rises above E_1. Thus the cathode voltage of V125 rises, so that at instant B the plate current cuts off in V125. (Actually instant B follows very closely after instant A.) Therefore the lockout multivibrator goes into its second stable state with V125 cut off and V133A conducting heavily. As a result the cathode of V133A raises the sweep-gating-multivibrator input grid to a higher voltage E_2.

At instant C the hold-off output-tube (V133B) grid voltage rises above E_2. Thus, very shortly, the cathode voltage of V133A rises to the point where plate current cuts off in V133A. Now the only current in the cathode resistor R130 is the current in V133B. The corresponding voltage drop in R130 drives the sweep-gating-multivibrator input grid more positive during the interval CD. At instant D the hold-off output voltage drives the sweep-gating-multivibrator input-grid voltage to the upper hysteresis limit. Therefore the sweep-gating multivibrator reverts to its first stable state. Consequently the time-base-generator output waveform stops rising and drops toward its quiescent level. At the same time (interval DF) the hold-off output voltage drops (although more slowly--see Sec. 11-3k).

At instant F, the hold-off output-tube (V133B) grid voltage drops below E_2. Thus the cathode voltage of V133A drops to the point where plate current again flows in V133A. Then the cathode current in V133A causes a voltage drop in R130 that holds the cathode voltage of V133B at E_2. Thus V133B cuts off, so that the only current in R130 is the current in V133A. Consequently, after instant F, the sweep-gating-multivibrator input-grid voltage remains at E_2.

Therefore, after instant F, V133A cathode holds the sweep-gating-multivibrator input-grid voltage so high that no sweep can occur--even though trigger spikes such as spike T might arrive from the differentiator. We can maintain this situation indefinitely--until we operate the RESET pushbutton.

Now suppose we operate the RESET pushbutton at some instant G. This operation rapidly raises the voltage at the pushbutton upper contact. C102 couples the resulting positive-going voltage change to the grid of amplifier V114. A corresponding negative-going waveform appears at the plate of V114. C125 couples this negative-going waveform to the grid of V133A, driving the lockout multivibrator back into its first stable state with V125 conducting and V133A cut off. Thus when we close the RESET button at instant G (Fig. 11-14), the sweep-gating-multivibrator input-grid voltage drops back to E_1, starting a new sweep.

The over-all operation, with the HORIZONTAL DISPLAY switch at "A" SINGLE SWEEP and with the STABILITY control full right, produces a single horizontal sweep each time we operate the RESET button. Sweeps cannot occur at other times, even though trigger spikes might arrive from the differentiator.

11-5 Triggered single sweeps. Now suppose that instead of setting the STABILITY control full right, as in the preceding section, we set the STABILITY control for triggered operation of the sweep-gating multivibrator. To do this, we can either

1. Adjust the STABILITY control for triggered operation as in Sec. 11-3m--with the HORIZONTAL DISPLAY switch at TIME BASE A (or MAIN SWEEP NORMAL).

2. Or turn the STABILITY control full left to actuate the PRESET switch that substitutes the internal PRESET ADJUST control for the STABILITY control.

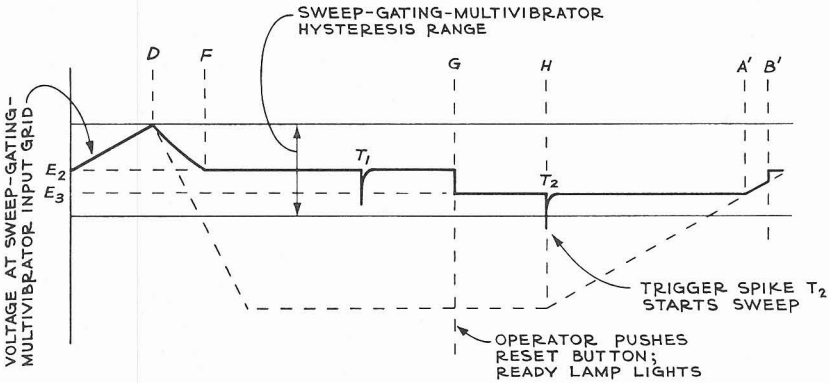

Fig. 11-15 Composite waveform at the sweep-gating-multivibrator input grid during triggered single-sweep operation. Assume, at the left-hand end of the diagram, that a sweep is already under way. At instant D, the SWEEP LENGTH ramp sample switches the sweep-gating multivibrator into its first stable state, with V135A conducting. Therefore the sweep ends and the sweep-gating-multivibrator input-grid voltage drops to E_2 along a curve determined by the hold-off-circuit time constant (interval DF, Fig. 11-15). Since E_2 is a relatively positive voltage, even an incoming trigger spike such as T_1 can't drive the sweep-gating-multivibrator input grid below the lower hysteresis limit to start a new sweep. But if we operate the RESET button (instant G), we thereby switch the lockout multivibrator into its second stable state with V125 conducting. Therefore the sweep-gating-multivibrator input-grid voltage drops to the stability dc level E_3--a voltage that is lower than E_2. Now an incoming trigger spike such as T_2 can drive the sweep-gating-multivibrator input grid below the lower hysteresis limit (instant H), starting a new sweep.

Now when we turn the HORIZONTAL DISPLAY switch to "A" SINGLE SWEEP (or MAIN SWEEP DELAYED), a sweep can occur only after both these events occur--in this sequence:

1. We operate the RESET pushbutton.

2. And then a negative-going trigger spike arrives from the differentiator.

Let us follow this triggered single-sweep operation, referring to Figs. 11-13 and 11-15. At the start, suppose that a sweep is under way, ending at instant

D (Fig. 11-15). As in the preceding section, the hold-off circuit then lets the sweep-gating-multivibrator input-grid voltage fall gradually during the interval DF to the voltage E_2. E_2 is the voltage at the cathode of V125 when that tube conducts--that is, while the lockout multivibrator is in the second stable state. And as in the preceding section, no sweep can occur--even though trigger spikes such as spike T_1 (Fig. 11-15) might arrive from the differentiator. We can maintain this situation indefinitely--until we operate the RESET pushbutton.

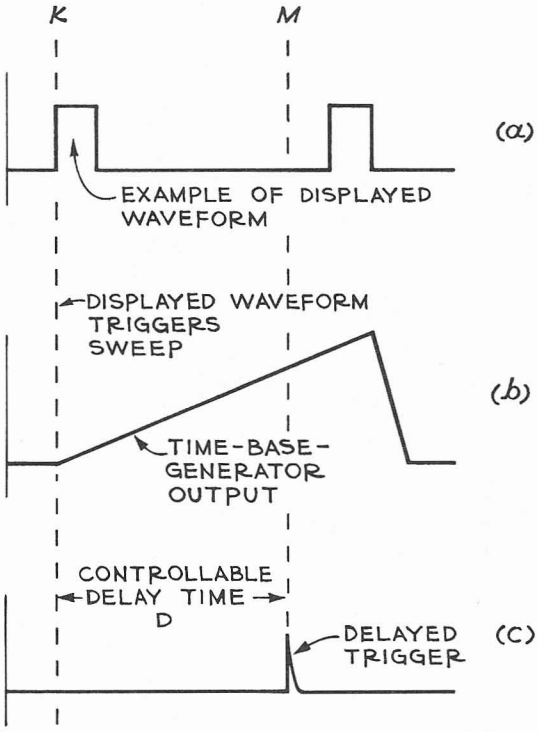

Fig. 11-16 Desired operation to obtain a delayed trigger. At instant K, a displayed waveform a triggers the time-base system, starting a ramp output waveform b. After a controllable delay interval D, we want a delayed-trigger waveform to appear (instant M). The following illustrations show how we accomplish this operation.

Now suppose that at some instant G we operate the RESET pushbutton. This operation, as in the preceding section, drives the lockout multivibrator back into its first stable state with V125 conducting and V133A cut off. Thus, when we close the RESET button at instant G (Fig. 11-15), the sweep-gating-multivibrator input-grid voltage drops to E_3--a voltage appropriate for triggered operation of the sweep-gating multivibrator. At the same time, since V133A cuts off, the voltage at the plate of V133A rises. Therefore the READY lamp lights, indicating that the time-base system will start a single sweep as soon as a negative trigger such as T_2 arrives from the differentiator. As soon as this trigger waveform arrives, the new sweep starts and the READY lamp extinguishes. After this new sweep, we can again operate the RESET pushbutton--lighting the READY lamp and readying the circuit for another triggered sweep.

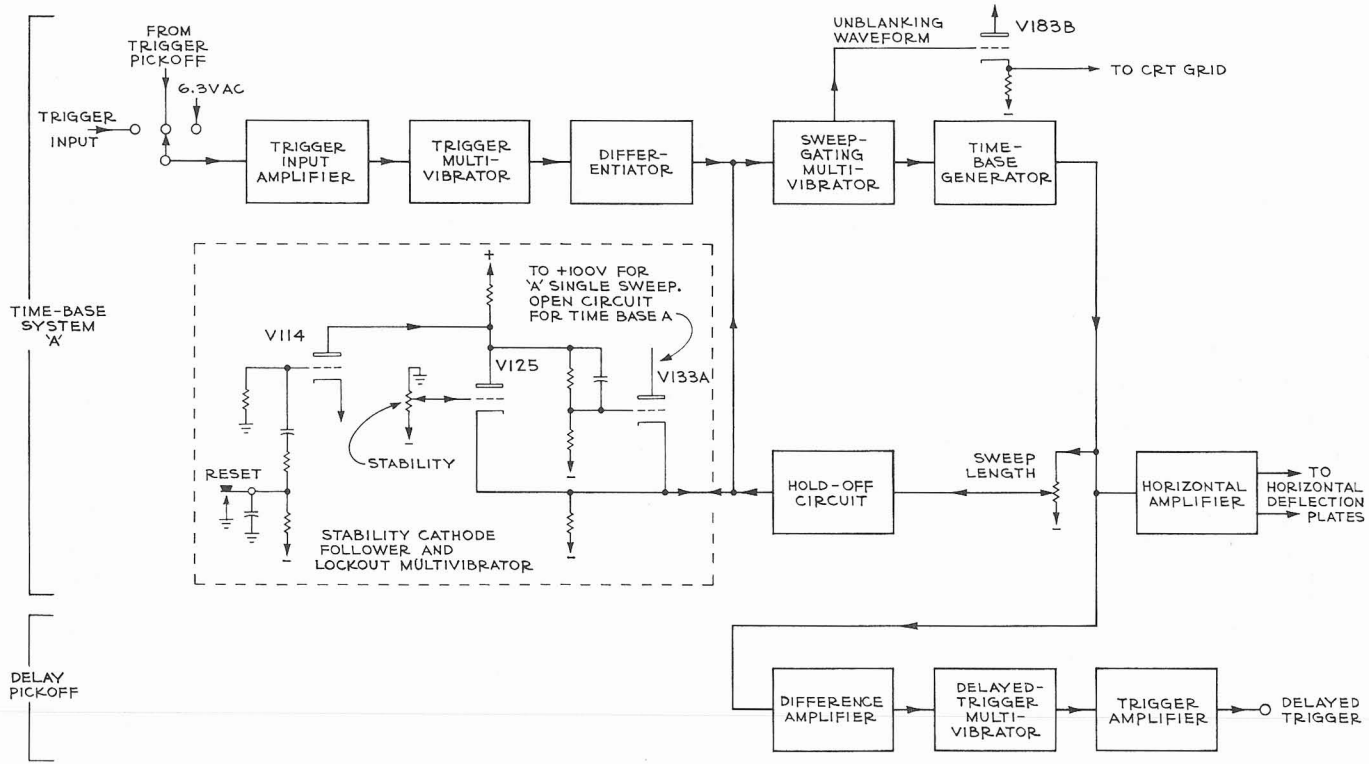

CONNECTIONS WHEN HORIZONTAL DISPLAY SWITCH IS SET TO TIME BASE A OR 'A' SINGLE SWEEP.

Fig. 11-17 Block diagram of horizontal-deflection system that includes the single-sweep feature as well as the delayed-trigger feature we are studying.

The over-all operation, with the HORIZONTAL DISPLAY switch at " A" SINGLE SWEEP and with the STABILITY control set for triggered operation of the sweep-gating-multivibrator, produces a single horizontal sweep each time we operate the RESET pushbutton and then apply a triggering waveform. The READY lamp lights when we operate the RESET pushbutton. And at some instant during the sweep, the READY lamp extinguishes and remains extinguished.

In the triggered-single-sweep operation, the READY lamp provides these indications:

1. If the READY lamp is lighted, an incoming triggering signal can start the sweep (barring, of course, the possibility of the STABILITY control getting turned away from the " triggered operation" position).

2. If the READY lamp has been lighted, but is now extinguished, then a sweep has occurred (a useful indication when we are photographing waveforms).

3. When the READY lamp is extinguished, we must push the RESET button to relight the READY lamp before a new sweep can start.

11-6 Delayed triggers. For certain applications we find it useful if, from an output terminal on our oscilloscope, we can take a delayed-trigger waveform. Such a delayed-trigger waveform can be, for example, a positive spike that appears after a preselected interval *D* following the start of the sweep (Fig. 11-16).

Figure 11-17 shows in block form a horizontal-deflection system that includes a delayed-trigger provision. (This diagram also shows, in simplified form, the single-sweep provision described in Secs. 11-4 and 11-5. Fig. 11-17 indicates the interconnections involving the time-base-generator output, the horizontal-amplifier input, the unblanking circuit to the cathode-ray-tube grid, and the delay-pickoff input that we set up when we turn the HORIZONTAL DISPLAY switch to TIME BASE A or to " A" SINGLE SWEEP.) We call the circuitry that provides delayed-trigger operation the delay-pickoff circuit. The delay-pickoff circuit is shown in detail in Fig. 11-18. In using the delayed-trigger provision (Figs. 11-17 and 11-18), we apply the time-base-generator output ramp voltage to the input circuit of a difference amplifier (V414 and V424). This difference amplifier operates as a voltage discriminator as discussed in Secs. 7-2 and 7-4. According to Sec. 7-4, we should use a large value of resistance in the common-cathode circuit of V414 and V424, to maintain the sum of the cathode currents in these two tubes essentially constant. However, in Fig. 11-18, we use the plate-to-cathode circuit of V428A in place of this large value of common-cathode resistance. If the sum of the cathode currents in V414 and V424 tends to change, then the voltage drop across R428 in the cathode of V428A makes a compensating change--thus changing the V428A grid-to-cathode bias voltage. In this way we hold essentially constant the current in V428A (and therefore the sum of the currents in V414 and V424).

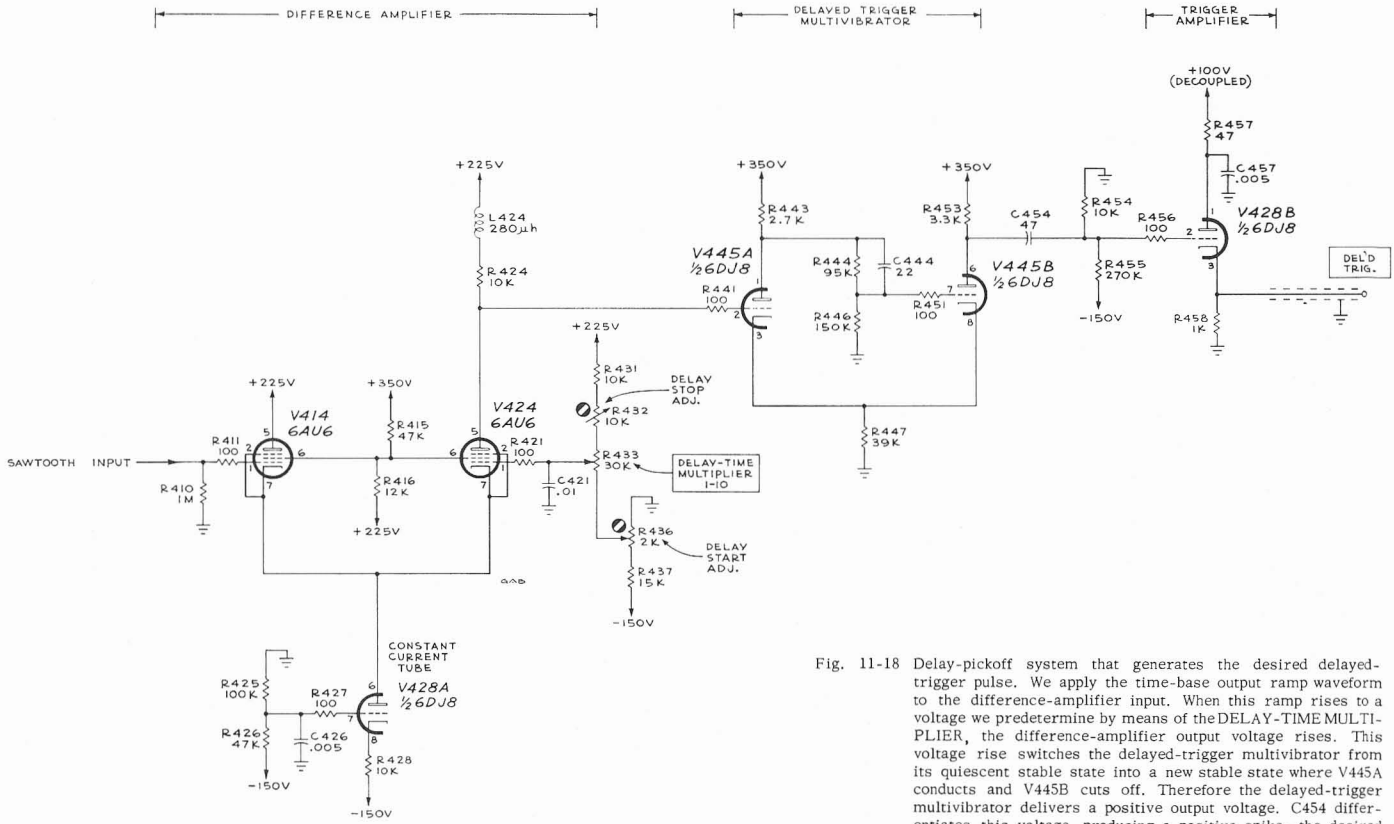

Fig. 11-18 Delay-pickoff system that generates the desired delayed-trigger pulse. We apply the time-base output ramp waveform to the difference-amplifier input. When this ramp rises to a voltage we predetermine by means of the DELAY-TIME MULTIPLIER, the difference-amplifier output voltage rises. This voltage rise switches the delayed-trigger multivibrator from its quiescent stable state into a new stable state where V445A conducts and V445B cuts off. Therefore the delayed-trigger multivibrator delivers a positive output voltage. C454 differentiates this voltage, producing a positive spike--the desired delayed-trigger waveform.

When the difference amplifier is in its quiescent state, V414 is cut off while V424 conducts. V424 now operates in somewhat the manner of a cathode follower, so that the voltage at the cathodes of V414 and V424 approximates the voltage at the grid of V424--and we can set the grid voltage of V424 by means of the DELAY-TIME MULTIPLIER. Now suppose the time-base-generator ramp output voltage raises the voltage to the grid of V414. As the ramp voltage rises, the voltage at the grid of V414 approaches the common-cathode voltage. Therefore V414 starts to conduct. The time required (after the input ramp waveform starts to rise) for V414 to start conducting depends upon two things: (1) the rate at which the ramp waveform rises, set by the TIME/CM switch, and (2) the cathode voltage of V414, set by the DELAY-TIME MULTIPLIER. Thus we can use the TIME/CM and DELAY-TIME MULTIPLIER controls to set the time-delay interval *C* (Fig. 11-19c) that separates the sweep start from the start of conduction in V414.

But we have seen that V428A holds constant the sum of the cathode currents in V414 and V424. Thus when current flows in V414, the current in V424 drops (Fig. 11-29d). Therefore the voltage at the plate of V424 rises (Fig. 11-19e).

We apply this voltage rise to the input grid of a Schmitt trigger--the delayed-trigger multivibrator V445. The delayed-trigger multivibrator "normally" rests in its second stable state, with V445A cut off and with V445B conducting. When the plate voltage of V424 rises above the delayed-trigger-multivibrator upper hysteresis limit (Fig. 11-19e), the delayed-trigger multivibrator goes into its first stable state. Then V445A conducts while V445B goes into cutoff. As a result, the voltage at the plate of V445B rises abruptly (Fig. 11-19f).

When, during the retrace, the time-base-generator output waveform (Fig. 11-19b) drops below the cut-off grid voltage of V414, the above events reverse themselves as shown in Figs. 11-19b to 11-19f. Thus the voltage at the plate of V445B again falls (Fig. 11-19f). We see that the over-all output waveform at the plate of V445B is a rectangular voltage pulse.

We apply this rectangular waveform from the plate of V445B to a differentiator that involves C454, R454, and R455 (these two resistors are effectively in parallel as far as the changing signal is concerned). The differentiator output consists of positive and negative spikes, as shown in Fig. 11-19g.

We use the spikes of Fig. 11-19g to drive a trigger "amplifier," V428B. With no signal input, V428B is biased below cutoff. The positive spikes of Fig. 11-19g drive V428B into conduction, producing positive output spikes at the cathode of V428B as shown in Fig. 11-19h. The negative spikes in Fig. 11-19g produce no plate-current change in V428B, since that tube is already cut off when these negative spikes arrive at the grid. (However it might be possible to observe negligible traces of the negative spikes that leak through V428B and its associated circuit, as shown in Fig. 11-19h).

In summary, then, suppose we first trigger a horizontal sweep (Sec. 11-2). Then, after a predetermined calibrated delay interval, the delayed-trigger

feature enables us to take off a second triggering signal (positive spike) from the front-panel DELAYED TRIGGER terminal. We can utilize this delayed-trigger waveform for any purpose for which it might prove useful. We

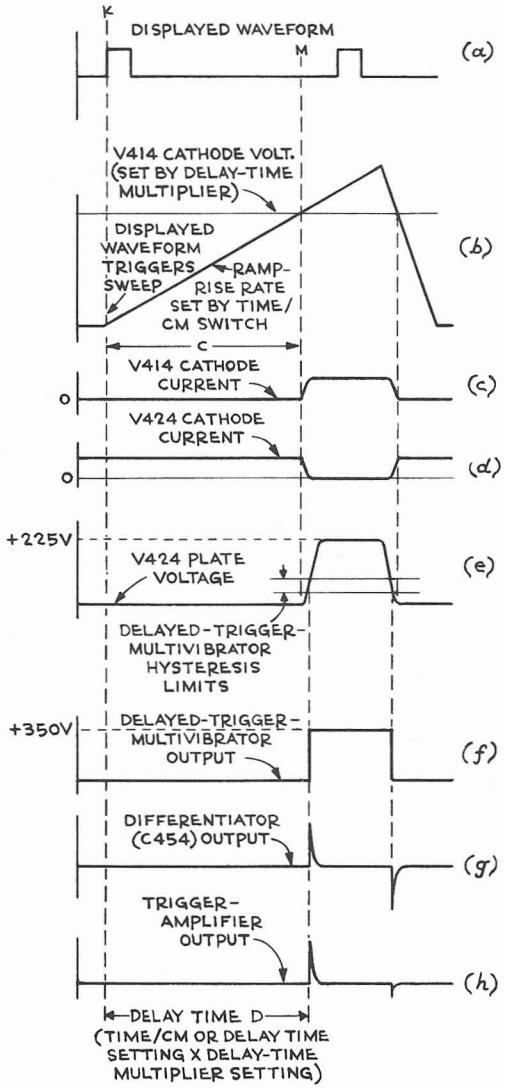

Fig. 11-19 Detailed waveforms showing the operation of the delay-pickoff system of Fig. 11-18.

can preset the delay interval (between the initial input sweep-triggering signal and the output delayed trigger) as the product of the TIME/CM setting times the DELAY-TIME MULTIPLIER setting.

Fig. 11-20 Horizontal-deflection-system connections when we set the HORIZONTAL DISPLAY switch to TIME BASE B or to "B" INTENSIFIED BY "A." Here we use time-base system *B* (similar in principle to the original time-base system *A*) to drive the horizontal amplifier and thus produce horizontal spot deflection, and to drive the delay-pickoff system. When we set the HORIZONTAL DISPLAY switch to "B" INTENSIFIED BY "A" the delayed-trigger waveform actuates the lockout multivibrator. If we set the time-base *A* STABILITY control full right, time-base system *A* delivers a ramp output and also an unblanking waveform. The amplitude of this time-base *A* unblanking waveform is greater than that of the time-base *B* unblanking waveform. Therefore the trace is brighter during the rising ramp interval of the time-base *A* output waveform.

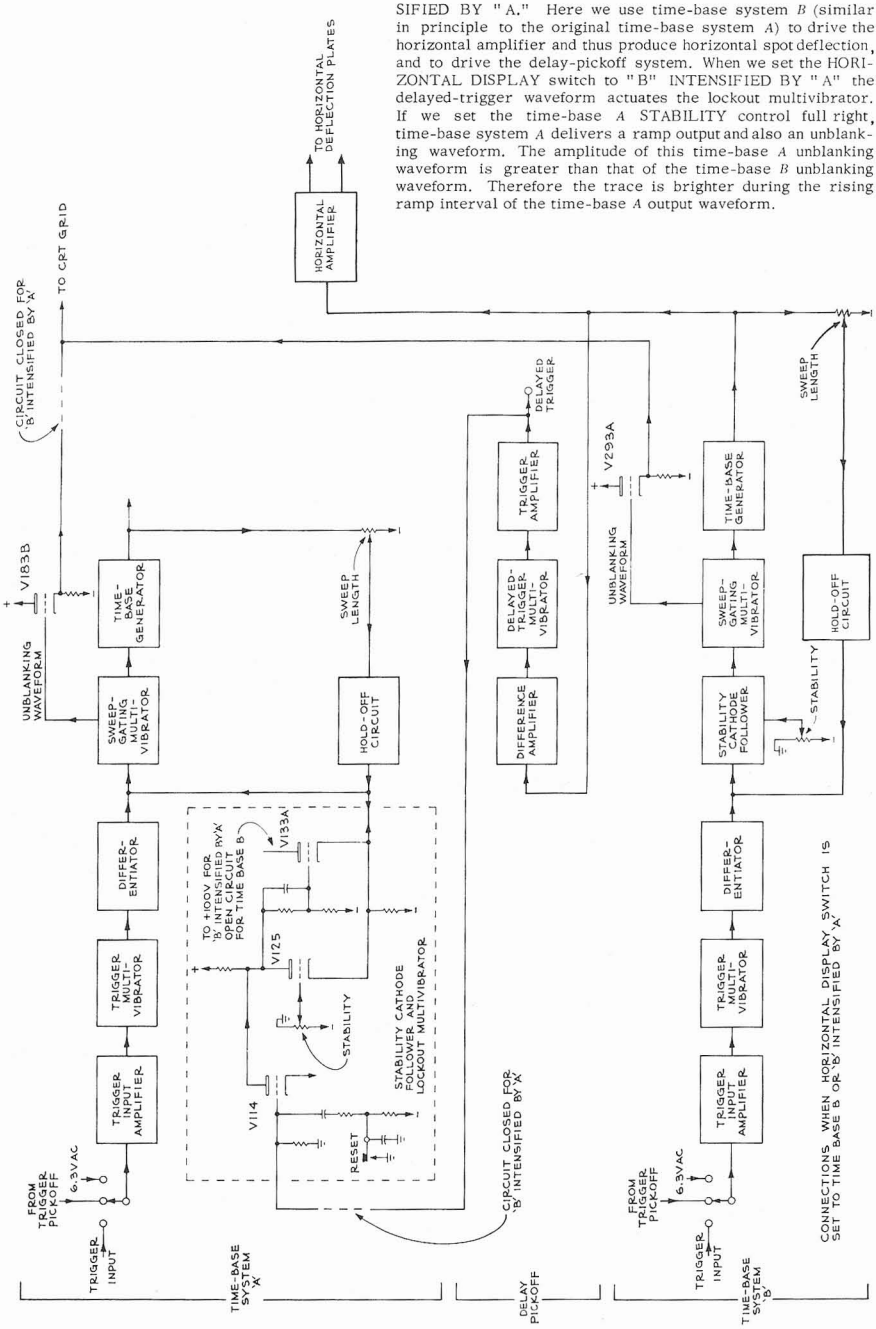

11-7 TIME BASE B. When we set the HORIZONTAL DISPLAY switch to TIME BASE *B*, we introduce a separate, complete time-base system (time-base system B) in place of the time-base system we have been considering (time-base system *A*--see Fig. 11-20). That is, when we set the HORIZONTAL DISPLAY switch to TIME BASE B, we set up the following interconnections within the horizontal-deflection system:

1. We use the output from time-base system *B* to drive the horizontal amplifier and thus to deflect the cathode-ray-tube spot horizontally.

2. We use the output from time-base system *B* to drive the delay-pickoff circuit.

3. We use the unblanking waveform from the time-base-system *B* sweep-gating multivibrator to unblank the cathode-ray-tube spot.

4. We remove the plate voltage from V133A, thus disabling the single-sweep action in time-base system *A*.

In other words, an oscilloscope that includes the TIME BASE B (or DELAYING SWEEP) feature effectively provides a spare time-base system. Time-base system *B* operates in much the same way as time-base system *A*, except for a few details. Therefore we shall not show here a detailed diagram of time-base system *B*.

Of course, we include time-base system *B* in the oscilloscope not actually as a spare system but for the operational flexibility it provides, as we shall describe.

11-8 "B" INTENSIFIED BY "A". As a preliminary to studying the delaying-sweep feature, let us study the operation "B" INTENSIFIED BY "A," which is also illustrated in Fig. 11-20. When we set the HORIZONTAL DISPLAY switch to "B" INTENSIFIED BY "A," we set up interconnections within the horizontal-deflection system that allow us to perform the following operations:

1. We use the output from time-base system *B* to drive the horizontal amplifier and thus to deflect the cathode-ray-tube spot horizontally. Suppose, for example, that we display the waveform of Fig. 11-21a. Let us set the time-base *B* controls for "internal" triggering at point K on this displayed waveform. As a result, time-base-system *B* delivers the output waveform shown in Fig. 11-21b.

2. Concurrently with the ramp output waveform from time-base system *B*, the sweep-gating multivibrator in time-base system *B* delivers an unblanking output waveform (Fig. 11-21c). We apply this unblanking waveform to the cathode-ray-tube grid via the cathode follower V293A.

3. We use the ramp output from time-base system *B* to drive the delay-pickoff system. Figure 11-21d shows the resulting delayed-trigger output

from the delay-pickoff system. As described in Sec 11-6, the appearance of the delayed-trigger waveform (instant M) is separated from the triggering instant K by a delay-time interval--an interval that we can preset as the

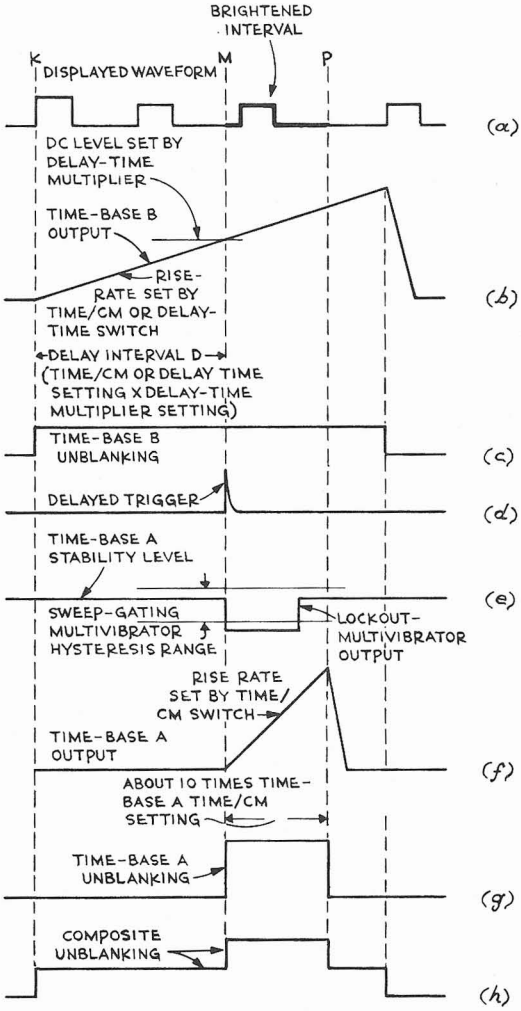

Fig. 11-21 Detailed waveforms showing the operation of the system of Fig. 11-20 when we set the HORIZONTAL DISPLAY switch to "B" INTENSIFIED BY "A."

product of the time-base B timing-switch setting times the DELAY-TIME MULTIPLIER setting. In the case of time-base system B, we identify the timing switch with a front-panel label TIME/CM OR DELAY TIME.

4. We apply plate voltage to V133A, thus making operative the "single-

sweep" feature of time-base system *A*. But instead of actuating the lockout multivibrator by means of the RESET pushbutton, we now actuate the lockout multivibrator by means of the positive delayed-trigger spike (Fig. 11-21d) from the delay-pickoff system. Figure 11-21e shows the lockout-multivibrator output--assuming that we set the time-base *A* STABILITY control full right.

5. Since we have now actuated the lockout multivibrator, and since we have set the time-base *A* STABILITY control full right, time-base system A delivers its ramp output waveform (Fig. 11-21f). In the present operation ("B" INTENSIFIED BY "A"), however, we don't use this ramp output waveform from time-base system *A* in any way related to the display.

6. Concurrently with the ramp output waveform from time-base system *A*, the sweep-gating multivibrator in time-base system *A* delivers an unblanking output waveform (Fig. 11-21g). We apply this unblanking waveform to the cathode-ray-tube grid via the cathode follower V183B. Note that when we set the HORIZONTAL DISPLAY switch to "B" INTENSIFIED BY "A," we parallel the cathode circuits of the unblanking cathode followers V293A and V183B. Thus whichever cathode-follower grid has the more positive voltage raises the common-cathode circuit to a potential sufficient to cut off the plate current in the other cathode follower. But we intentionally arrange the circuitry so that the unblanking voltage from time-base system *A* appreciably exceeds the unblanking voltage from time-base system *B* (contrast Fig. 11-21c with Fig. 11-21g). Therefore, during the ramp rise in the output from time-base system *A*, the unblanking output from time-base system *A* overrides the lower-amplitude unblanking output from time-base system *B*. The resulting composite unblanking waveform that reaches the cathode-ray-tube grid is shown in Fig. 11-21h. We see that while time-base system *A* delivers its ramp and unblanking output waveforms, the trace is brighter than when time-base system B alone delivers an unblanking waveform. Thus we apply the term "B" INTENSIFIED BY "A" to this operation. (If we turn the INTENSITY control too high, we might not discern the difference in trace brightness.) The brightened portion of the display lasts during the ramp rise in the output from time-base system *A*.

In summary, we can preset the delay-time interval *KM* as the product of the time-base *B* TIME/CM OR DELAY TIME setting times the DELAY-TIME MULTIPLIER setting. And we can set the duration *MP* of the brightened portion of the display by means of the time-base *A* TIME/CM control.

11-9 "A" DELAYED BY "B." Suppose we operate our oscilloscope with the HORIZONTAL DISPLAY switch at "B" INTENSIFIED BY "A" as described in the preceding section. If we now set the HORIZONTAL DISPLAY switch to "A" DELAYED BY "B" we arrange the horizontal-deflection circuits as shown in Fig. 11-22. Note that we thus disconnect the time-base-system *B* unblanking-cathode-follower output, so that only the time-base system *A* unblanking waveform (Fig. 11-23g) reaches the cathode-ray-tube grid. If we leave the time-base-system *A* STABILITY control full right, the other waveforms remain unaltered as shown in Fig. 11-23.

But Fig. 11-22 shows that we now drive the horizontal-amplifier input with the time-base-system *A* ramp output, rather than with the time-base-

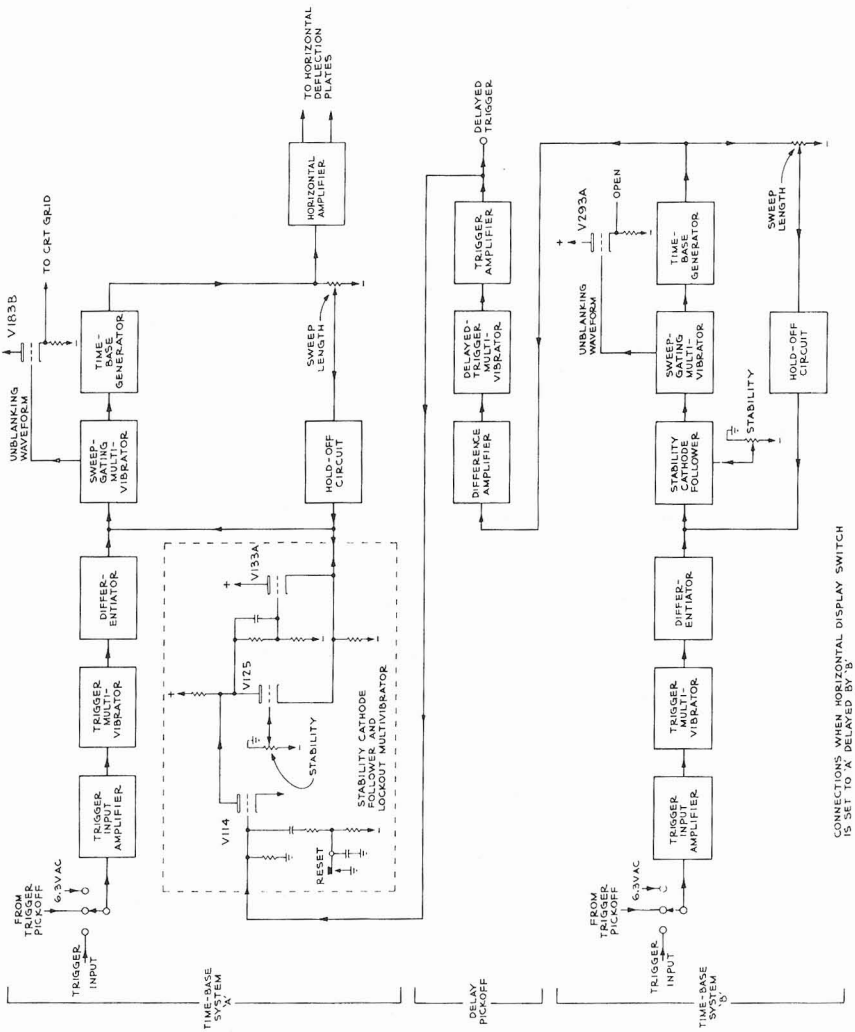

Fig. 11-22 Horizontal-deflection-system connections when we set the HORIZONTAL DISPLAY switch to "A" DELAYED BY "B." Here we use the time-base system *B* to drive the delay-pickoff system. The resulting delayed-trigger waveform actuates the lockout multivibrator. Therefore, if we set the time-base *A* STABILITY control full right, time-base system *A* delivers a ramp output that we use to drive the horizontal amplifier and thus to produce horizontal spot deflection. Thus, after we trigger time-base *B*, the display starts following an interval *D* that is equal to the product of the TIME/CM OR DELAY TIME setting times the DELAY-TIME MULTIPLIER setting.

system *B* ramp output. Thus the portion of the display that was brightened when we set the HORIZONTAL DISPLAY switch to "B" INTENSIFIED BY

" A" now expands horizontally to occupy the entire graticule when we set the HORIZONTAL DISPLAY switch to " A" DELAYED BY " B."

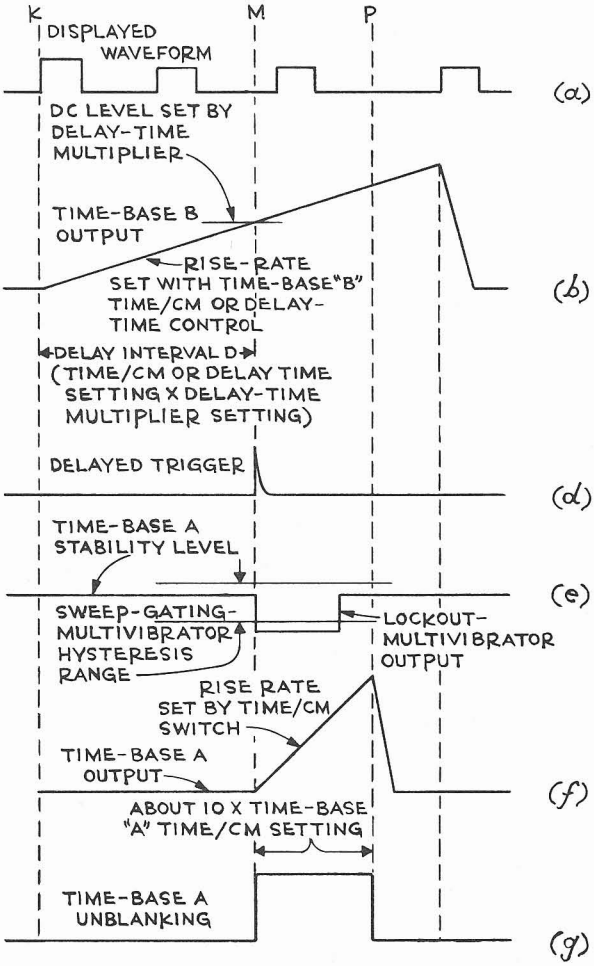

Fig. 11-23 Detailed waveforms showing the operation of the system of Fig. 11-22 when we set the HORIZONTAL DISPLAY switch to " A" DELAYED BY " B."

In other words, the display now starts after a delay-time interval *KM* following the instant *K* when we triggered time-base system *B*. We can preset this delay-time interval as the product of the time-base *B* TIME/CM OR DELAY TIME setting times the DELAY-TIME MULTIPLIER setting. (For this reason, time-base system *B* is identified in many oscilloscopes as a "delaying sweep.") And we can of course set the horizontal sweep rate by means of the time-base *A* TIME/CM control.

Among the purposes for which we can use this "A" DELAYED BY "B" operation is to display, over the entire graticule length, a single selected pulse from a train of pulses that follows an initial starting pulse. For this purpose, we must be able to set the time-base *B* TRIGGERING LEVEL control so that the starting pulse, rather than some other pulse in the train, functions as a triggering waveform for time-base *B*. We can do this if the starting-pulse amplitude exceeds the amplitude of any other pulse in the train (Fig. 11-24). Or, alternatively, we can use the starting pulse as

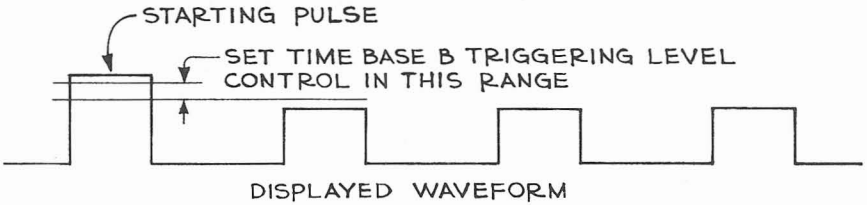

Fig. 11-24 When the starting pulse in a wave train has an amplitude greater than that of any other pulse in the train, we simply turn the time-base *B* TRIGGERING LEVEL control to a setting such that only the starting pulse can trigger time-base *B*.

a triggering waveform for time-base *B* if the starting-pulse duration exceeds the duration of any other pulse in the train. In the latter case, we apply a sample of the displayed waveform (say, from the oscilloscope VERT. SIG. OUT terminal) to an integrator. Then the longer starting pulse produces an integrator-output pulse whose amplitude exceeds that of other pulses (Fig. 11-25). We can apply the integrator output to the time-base *B* TRIGGER INPUT connector to actuate time base *B* (Fig. 11-26).

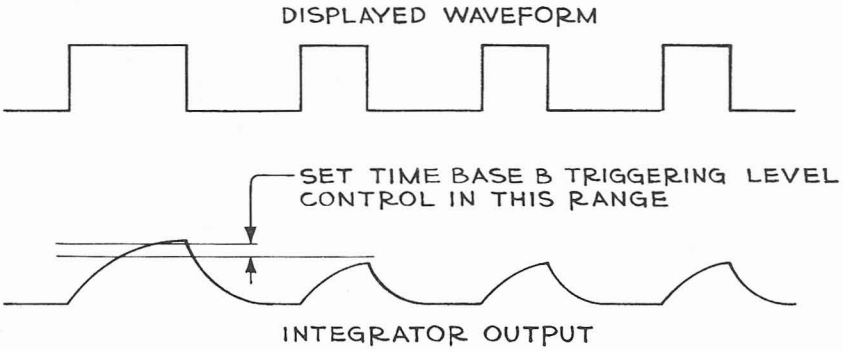

Fig. 11-25 Sometimes the starting pulse is a longer pulse than the others, or is a double pulse, rather than a higher-amplitude pulse. In this case, we can use an integrator to build up the starting pulse amplitude so that only the integrated starting pulse can trigger time base *B*.

Sometimes the time spacing between the starting pulse and the individual pulse we want to display is not constant. This variation in time spacing might occur because of unintentional jitter in the system we are examining;

or the variation might occur because of intentional time-position modulation of the pulse we are displaying. In such cases we can nevertheless achieve a stable display of the desired single pulse. To do this we set the time-base *A* TRIGGER SLOPE, TRIGGERING MODE, TRIGGERING LEVEL, and STABILITY controls so that time-base system *A* starts the horizontal trace in response to the leading edge of the pulse we want to display. We can call this operation "delayed-and-triggered sweep" operation. The corresponding waveforms are shown in Fig. 11-27. Note that at instant *M* in Fig. 11-27e, when the delayed trigger actuates the lockout multivibrator, the lockout-multivibrator output does not drive the time-base *A* sweep-

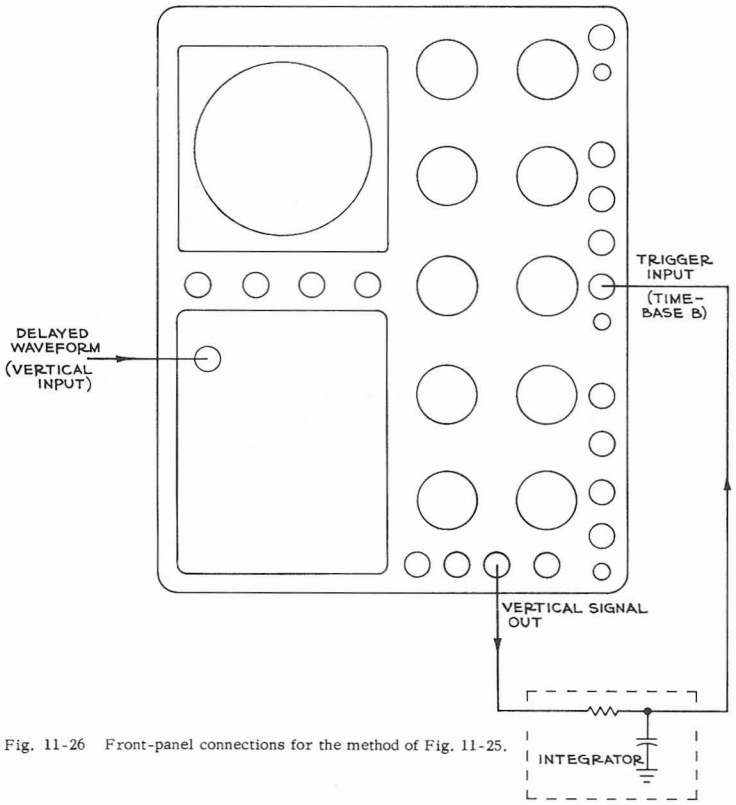

Fig. 11-26 Front-panel connections for the method of Fig. 11-25.

gating multivibrator input grid below the lower hysteresis limit--since we just set the time-base *A* STABILITY control for triggered operation. But at instant *N* the displayed-pulse leading edge makes the time-base *A* trigger multivibrator and differentiator deliver a negative trigger spike (Fig. 11-27e). This trigger spike actuates the time-base *A* sweep-gating multivibrator, so that time-base system *A* delivers its ramp output (Fig. 11-27f) and unblanking output (Fig. 11-27g). Thus we display that portion of the waveform of Fig. 11-27a that lies in the interval *NP*.

At any time we wish, we can turn the HORIZONTAL DISPLAY switch back to "B" INTENSIFIED BY "A." Then the brightened part of the display tells us just what part of the pulse train we display when we turn the HORIZONTAL DISPLAY switch to "A" DELAYED BY "B."

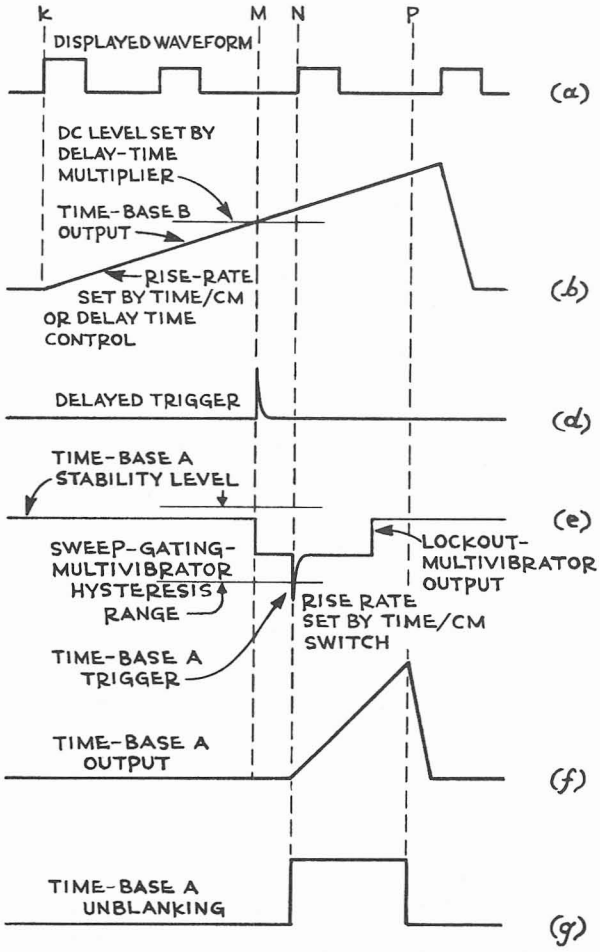

Fig. 11-27 When we set the HORIZONTAL DISPLAY switch to "A" DELAYED BY "B" and set the time-base *A* STABILITY control for triggered operation (instead of full right, as we did previously), the first time-base *A* triggering waveform that arrives after the delay interval *D* starts the sweep.

Depending upon the application, we might derive the triggering signals for time-base *A* and for time-base *B* from the same or different sources, including the waveform being displayed. Actually, an oscilloscope that includes the time-base *B* (delaying-sweep) feature is an extremely flexible and versatile instrument, capable of solving difficult display problems and serving as well as a source of various accurately timed waveforms.

The preceding operations, however, show the basic operations of the oscilloscope circuitry. For applications information, consult the Field Engineer or manufacturer.

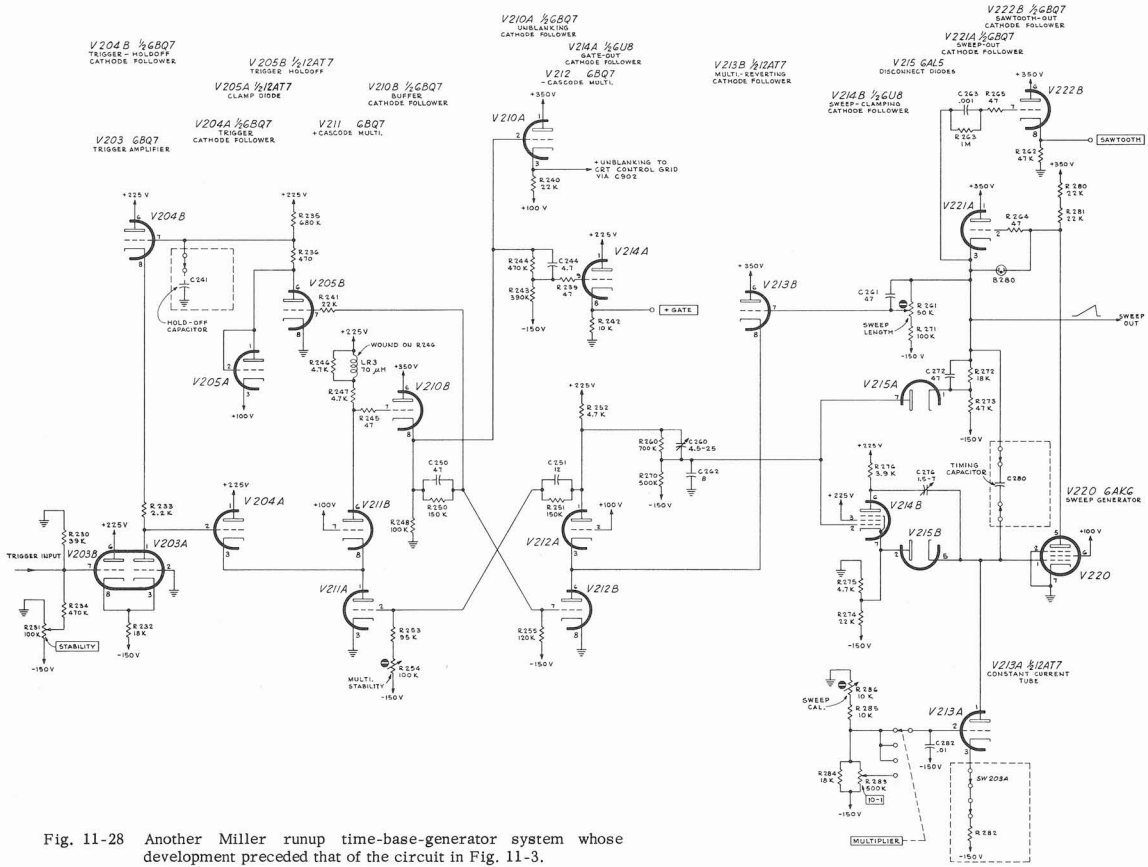

Fig. 11-28 Another Miller runup time-base-generator system whose development preceded that of the circuit in Fig. 11-3.

11-10 Another Miller-runup time-base system. Figure 11-28 shows a time-base system that was developed before the system shown in Fig. 11-3.

In Fig. 11-28, the sweep-gating multivibrator (V211 and V212) operates in the manner of an Eccles-Jordan circuit (Sec. 10-11). When the Eccles-Jordan multivibrator is in either stable state, one tube conducts while the other tube is cut off. Thus, in the transition from one stable state to the other, the tube that originally conducts operates as an amplifier--until that tube reaches cutoff. In the circuit of Fig. 11-28, the sweep-gating multivibrator operates in a manner derived from the Eccles-Jordan multivibrator. But in Fig. 11-28, each of the original tubes in the Eccles-Jordan circuit is replaced by a cascode-amplifier circuit (Sec. 5-15).

When the sweep-gating multivibrator in Fig. 11-28 is in its quiescent condition, V211A and V211B conduct plate current in a cascode configuration. Therefore the plate voltage of V211B is relatively low. We impress this low plate voltage on the grid of V212B by way of the cathode follower V210B. Consequently, the plate current in V212B and V212A is cut off. We apply the resulting high voltage at the plate of V212A to the voltage divider composed of R260 and R270; therefore, the voltage at the output of this divider is relatively high. We apply this high divider-output voltage to the plate of diode V215A and to the grid of cathode follower V214B. Therefore diodes V215A and V215B conduct, clamping the voltages at the terminals of the timing capacitor C280 near ground.

Furthermore, while the sweep-gating multivibrator is still in its quiescent stable state with V211 conducting, the resulting low voltage at the cathode of V210B cuts off V205B. The plate voltage of V205B tends to rise toward +225 volts (but we clamp this V205B plate voltage at a lower positive value by means of V205A connected as a diode. The relatively positive voltage at the plate of V205B reaches the grid of V204B, so that current flows in the cathode-to-plate circuits of V204B and V203A.

To start the sweep, we apply a positive-going input triggering waveform to the grid of V203B. Then V203B and V203A operate as a cathode-coupled amplifier (Sec. 7-1), applying a positive-going input triggering waveform to the grid of V204A. As a result, some of the plate current in V211A now flows in V204A as well, subtracting from the plate current in V211B. Therefore the voltage at the plate of V211B rises so that the multivibrator goes into its other stable state in the manner we studied for the Eccles-Jordan circuit. When the multivibrator is in this new stable state, V212A and V212B conduct, so that the plate voltage of V212A drops, cutting off the plate current in diodes V215A and V215B. Thus the Miller runup circuit (comprising the circuits of V220, V221A and V213A) develops its positive-going ramp output voltage. V213A, long-tailed by the timing resistor R282, is intended to help hold the timing-capacitor charging current constant.

When we triggered the sweep-gating multivibrator, a result was that V211B went into cutoff. We apply the resulting V211B plate-voltage rise, by way of cathode follower V210B, to the grid of V205B so that V205B conducts plate current. And we apply the resulting V205B plate-voltage drop to the grid of V204B, cutting off the plate current in V204B and V203A. Thus, during the time-base-generator runup interval, the cathode-coupled amplifier V203 cannot apply any further input triggering waveforms--either positive or negative--to the grid of V204A.

By way of the SWEEP LENGTH control, we apply a sample of the time-base-generator positive-going ramp output voltage to the grid of V213B. When the ramp voltage rises to the point where V213B starts to conduct, some of the V212B plate current diverts from V212A into V213B. As a result, the V212A plate voltage rises so that sweep-gating multivibrator goes back into its quiescent stable state in the manner of an Eccles-Jordan circuit. The resulting V212A plate-voltage rise allows diodes V215A and V215B to conduct. The currents in these diodes discharge the timing capacitor and clamp the timing-capacitor-terminal voltages near zero, thus ending the sweep.

When the sweep-gating multivibrator returned to its quiescent state, a result was that V211B went into plate-current conduction. We apply the resulting V211B plate-voltage fall, by way of cathode follower V210B, to the grid of V205B so that V205B goes into cutoff. Consequently the voltage at the plate of V205B rises--but the rate of this rise is limited by the time constant of the *RC* circuit that includes R235 and the hold-off capacitor C241. Thus, after a hold-off interval that we can control by selecting the value of C241, the grid voltage of V204B rises to a value that allows V204B and V203A to conduct. Then, and only then, the cathode-coupled amplifier V203 can apply a new input positive-going triggering signal to start a new sweep. In this way we avoid triggering a new sweep until the time-base-generator and horizontal-amplifier circuits have returned the horizontal-deflection-plate voltages to their quiescent values corresponding to a spot position at the left-hand end of the graticule--and furthermore, until any resulting transients in the horizontal-deflection system have died out.

The larger timing-capacitor value required for a slow sweep can delay the time-base system return to its quiescent voltage values. Therefore, for slow sweeps, we need larger hold-off-capacitor values to provide sufficiently long hold-off intervals. When we set the TIME/DIV switch, we select the timing capacitor C280 and the timing resistor R282 for the sweep rate we want. And at the same time the TIME/DIV switch inserts an appropriate value of hold-off capacitance C241.

11-11 Clamp-tube time-base system. Figure 11-29 shows a practical form of clamp-tube time-base system (Secs. 9-2 to 9-4). The timing capacitor we select with the SWEEP TIME switch connects to the plate of the clamp tube V213. When the system is in its quiescent condition V213 conducts, clamping the high-potential end of the timing capacitor at a voltage not much greater than zero. To start the sweep, we drive the grid of V213 into cutoff by means of a negative-going gating waveform from the sweep-gating multivibrator V209 and V210. We take this gating waveform from the plate of V209, and the duration of the gating waveform is the duration of the quasi-stable state of the sweep-gating multivibrator. When we apply the negative-going gating waveform to the grid of V213, we thereby drive V213 into cutoff. Thus the +450-volt supply charges the timing capacitor through the timing resistor R292. When the plate voltage of V213 reaches the maximum desired sweep voltage, the NE2 neon lamp fires and starts conducting--thus limiting the peak amplitude of the time-base-generator

output waveform. In this circuit, we take the time-base-generator output waveform from the coupling capacitor C237. We provide diode V214 to clamp the lower extremity of this time-base-generator output waveform

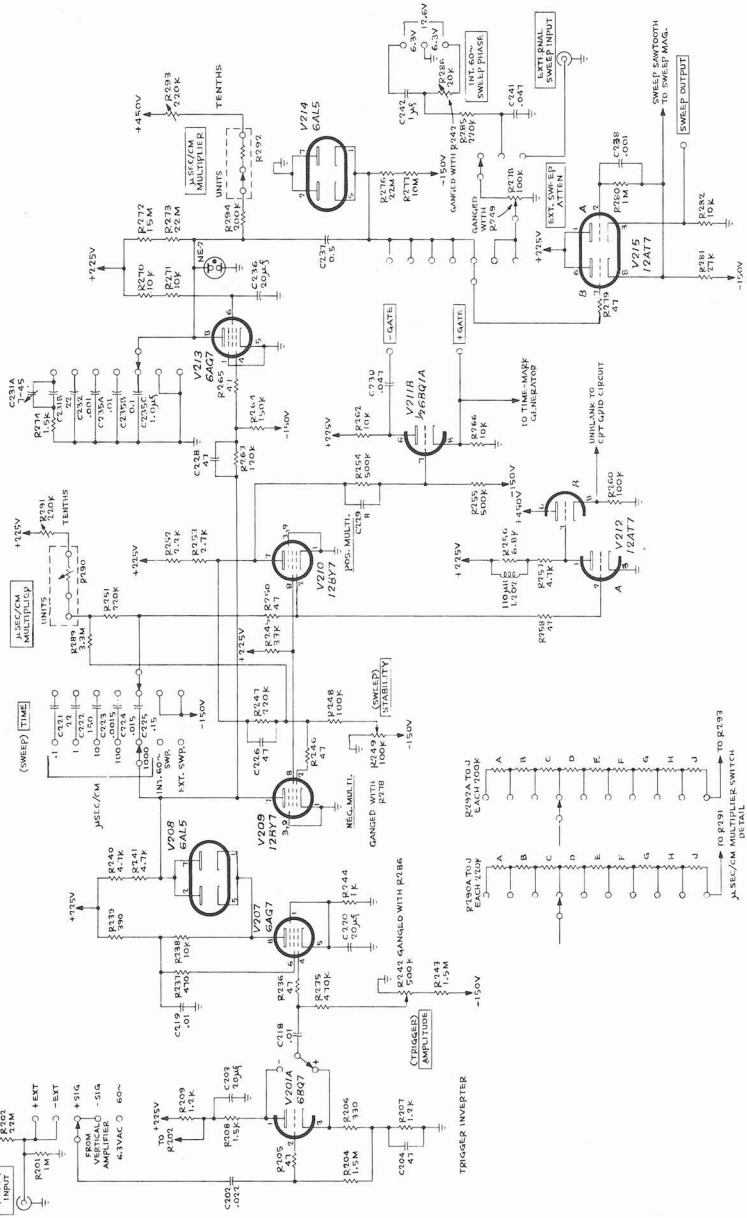

Fig. 11-29 A clamp-tube time-base-generator system.

at a fixed potential near zero volts, regardless of variations in duty factor or repetition rate.

The sweep-gating multivibrator is a plate-coupled monostable multivibrator (Secs. 10-6 to 10-8). When we set the SWEEP TIME switch to select the sweep rate, we thereby also select the multivibrator time-constant capacitor (C221 through C225). By thus selecting this capacitor, and also by setting R290 and R291 (ganged with the μSEC/CM control), we predetermine the interval between the sweep start and the instant when the sweep-gating multivibrator reverts to its quiescent stable state--thus removing the gating waveform from the clamp-tube grid and ending the sweep.

In addition to the negative-going gate waveform at the plate of V209, the sweep-gating multivibrator also simultaneously develops a positive-going rectangular wave at the plate of V210. In some circuits, we use this positive-going pulse as the unblanking waveform for the cathode-ray-tube grid. But in the circuit of Fig. 11-29, we derive the unblanking waveform from the voltage waveform at the grid of V210. As we learned in Sec. 10-7, the grid waveform of V210 during the multivibrator quasi-stable state resembles Fig. 11-30 (compare with Fig. 10-9b, interval *BC*). In Fig. 11-29, we apply this waveform to the grid of V212A. This waveform holds V212A cut off during the quasi-stable interval *BC*--that is, during the sweep interval. And we apply the resulting positive voltage at V212A plate, by way of the cathode follower V212B, to the cathode-ray-tube grid circuit as an unblanking waveform.

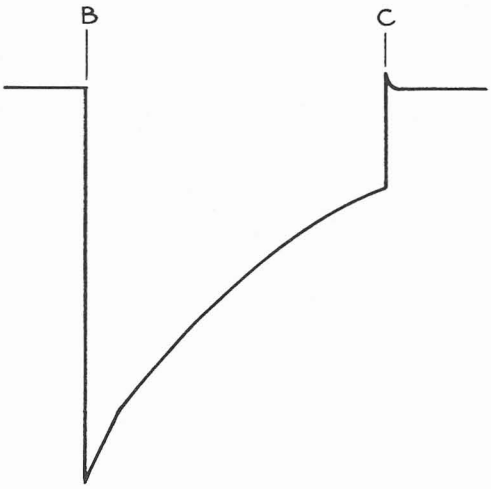

Fig. 11-30 V210 multivibrator-tube grid waveform in Fig. 11-29. This negative waveform holds V212A cut off during the sweep. We apply the resulting positive voltage at the plate of V212A to the cathode-ray-tube grid as an unblanking voltage.

To drive the sweep-gating multivibrator into its quasi-stable state and thus start the sweep, we use an input waveform from the trigger amplifier V207. We can drive V207 with an input signal from the trigger inverter V201A. For the trigger-inverter input, we can select either a displayed-vertical waveform sample, or an externally derived triggering waveform, or the 60-cycle power-line waveform. The trigger-inverter tube V201A has load resistors in both its plate and cathode circuits, so that we can drive V207

with either an inverted trigger-input waveform or with a trigger-input waveform that is not inverted. Thus we can start the sweep either during the rise (+ slope) or during the fall (- slope) of the triggering waveform.

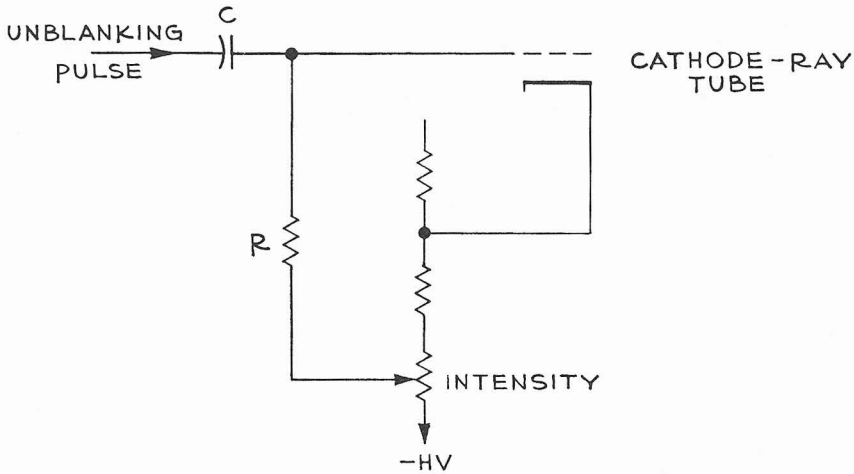

Fig. 11-31 Ac-coupled unblanking circuit.

To select the height of the sweep-starting point on the displayed waveform, we adjust the gain of the trigger amplifier V207 with the trigger AMPLITUDE control. This control sets the amount of negative grid-to-cathode bias voltage on V207, and thereby controls the voltage gain of that tube by shifting its operating point.

In the time-base system shown, a switch at the right-hand end of the diagram allows us to select for a horizontal-deflection waveform either the time-base-generator ramp waveform, or an externally generated deflection waveform that we can apply to the EXTERNAL TRIGGER INPUT terminal, or a 60-cycle deflection waveform by means of the phase-shifting network C242 and R286.

11-12 Unblanking circuits. As we have learned, the time-base-generator system develops a positive-going rectangular unblanking pulse simultaneously with the ramp output waveform that sweeps the cathode-ray-tube spot forward (left-to-right) across the screen. We apply the unblanking pulse to the cathode-ray tube so that we see the spot during the forward sweep of the spot but not during the right-to-left retrace. Let us consider some of the ways we can apply the unblanking pulse to the cathode-ray tube.

a. *RC*-coupled unblanking. In the circuit of Fig. 11-31, we apply the unblanking waveform to the cathode-ray-tube grid by way of the coupling capacitor *C*. Here we apply the negative grid-to-cathode bias voltage to the cathode-ray-tube grid by way of the grid-return resistor *R*. We

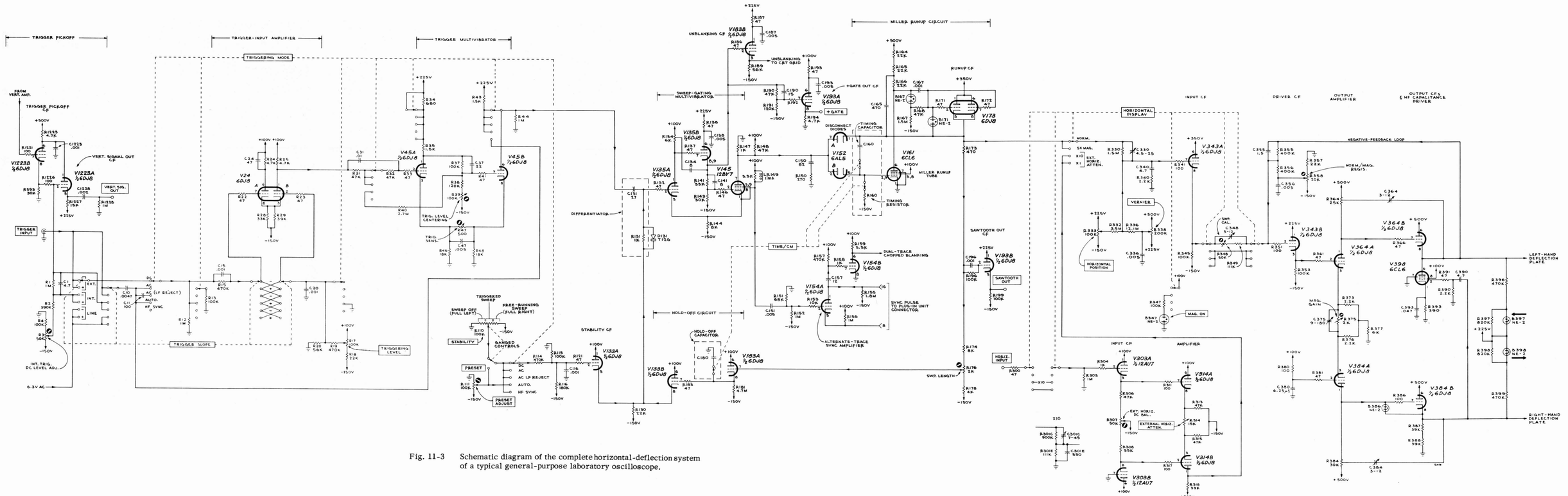

Fig. 11-3 Schematic diagram of the complete horizontal-deflection system of a typical general-purpose laboratory oscilloscope.

can adjust this bias voltage with the INTENSITY control for suitable spot brightness while the grid receives the unblanking voltage during the forward trace; yet while the unblanking voltage is absent during the retrace interval, the electron beam is cut off so that we don't see the trace.

Although this system is simple, it has some disadvantages. The applied unblanking pulse causes a small displacement current in C and R. For slow sweeps, the unblanking pulse is long; therefore this small displacement current changes the charge in C and allows the unblanking pulse at the cathode-ray-tube grid to sag. Thus the latter end of a slow trace appears dimmer than the earlier part of the trace.

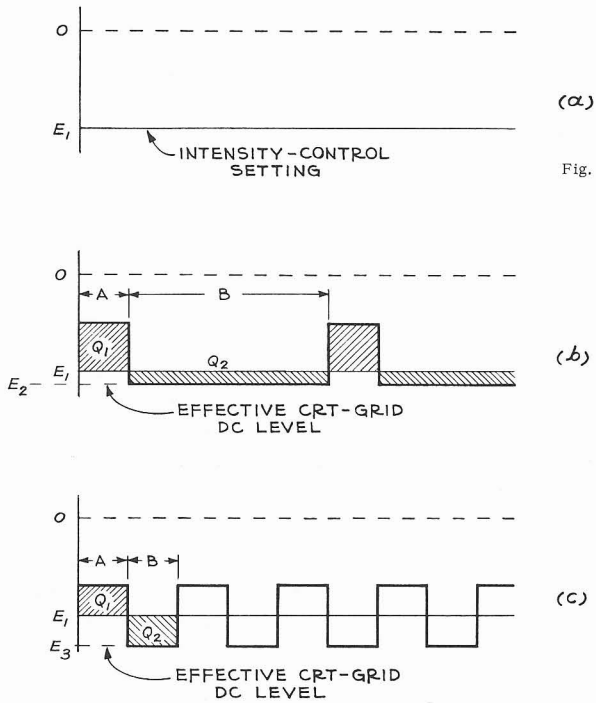

Fig. 11-32 When we use the ac-coupled unblanking circuit of Fig. 11-31, a low-duty-factor unblanking waveform b sets the effective cathode-ray-tube grid dc level higher than when we have a high-duty - factor unblanking waveform c. Thus, the trace tends to dim when we increase the unblanking-waveform duty factor.

A further problem arises when, for a given sweep TIME/CM setting, we increase the sweep repetition frequency (that is, when we increase the unblanking-waveform duty factor). For example, suppose we set the INTENSITY control so that the dc level at the cathode-ray-tube grid is E_1 (Fig. 11-32a). Now suppose we apply to the coupling capacitor C (Fig. 11-31) a repetitive unblanking waveform that follows the graph of Fig. 11-32b. During the interval A, the input unblanking pulse forces into the coupling capacitor C a charge indicated by the area Q_1 in Fig. 11-32b. But an ideal capacitor conducts no average dc current; thus, during the interval B (Fig. 11-32b), a charge Q_2 flows out of C through R that precisely equals the charge Q_1. Ths the areas marked Q_1 and Q_2 in Fig. 11-32b are equal. Or

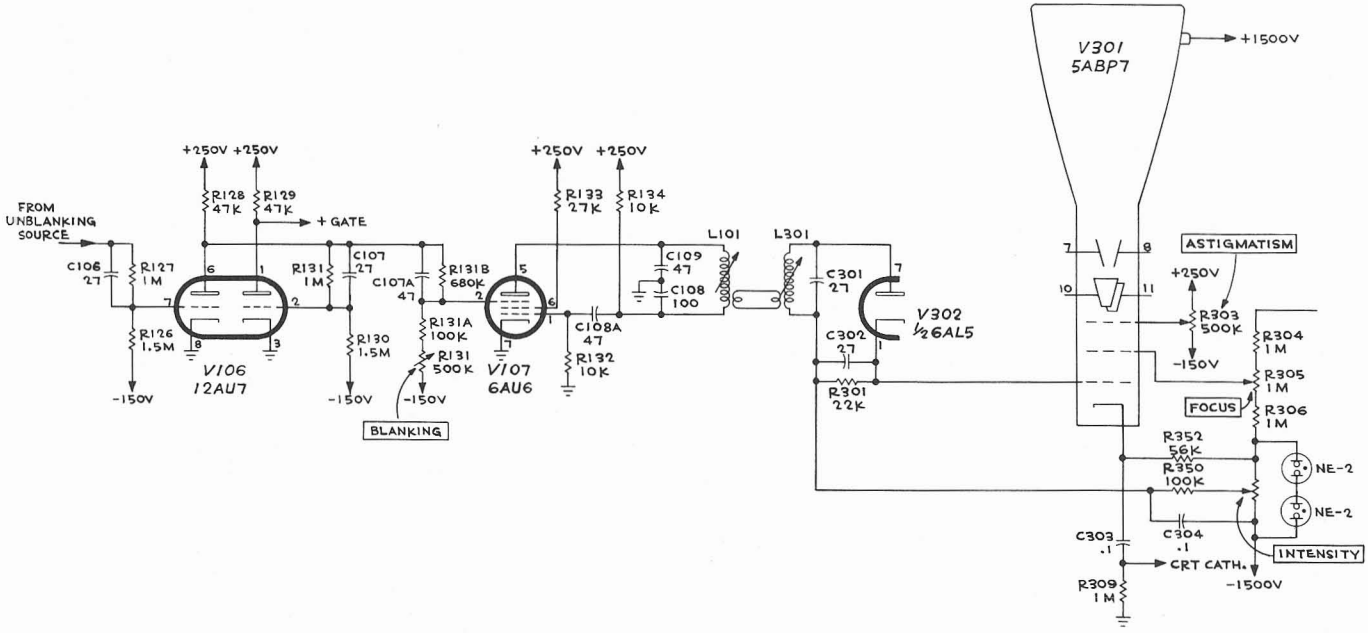

Fig. 11-33 An unblanking system using an oscillator. V302 rectifies the oscillator output that is present when the sweep is off, blanking the cathode-ray-tube beam.

what is the same thing, the repetitive unblanking pulses force the dc level at the cathode-ray-tube grid down from the INTENSITY control setting E_1 to a new lower effective value E_2.

Now consider what happens if we increase the sweep repetition frequency (and therefore the unblanking-waveform duty factor), as shown in Fig. 11-32c. Here the charge Q_2 that leaves the coupling capacitor C during interval B again must equal the charge Q_1 that the unblanking pulse supplied during interval A--since no average dc current flows in C. But now interval B is shorter than it was in Fig. 11-32b. Thus, in a way of speaking, the unblanking pulses force the effective dc level at the cathode-ray-tube grid still lower to a new value E_3 (Fig. 11-32c). That is, the trace dims as a result of increasing the unblanking-waveform duty factor.

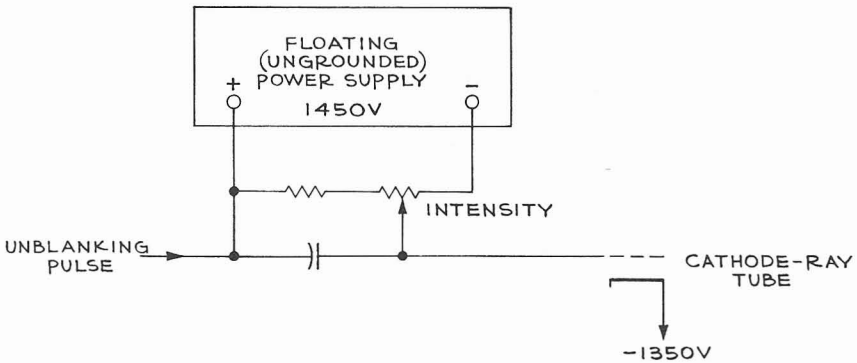

Fig. 11-34 Dc-coupled unblanking circuit that utilizes a floating power supply. This system eliminates the disadvantages of the ac-coupled system of Fig. 11-31.

This trace-dimming effect is partly counteracted by the increased duty factor of the trace itself; that is, a visible trace appears on the screen during a greater percentage of a given long time interval. But the overall effect is often a very apparent trace dimming; and to overcome this dimming we have to turn up the INTENSITY control.

b. Unblanking oscillator. In some oscilloscopes we overcome the two problems just mentioned by using the system of Fig. 11-33. Here we apply the positive-going unblanking pulse (from the time-base system) to the input grid of amplifier V106B. We use the resulting negative-going waveform at the plate of V106B to gate the suppressor of an oscillator tube V107, operating in a Colpitts circuit. The oscillator frequency is about 10 megacycles. Note that the original positive-going unblanking waveform in effect gates the oscillator off.

We link couple the oscillator output to a rectifier system (V302) in the cathode-ray-tube grid circuit. To blank the spot during the retrace, then, the rectifier applies a negative rectified voltage to the cathode-ray-tube grid. To unblank the spot during the forward trace, this system simply gates the

oscillator off and thus removes the resulting negative rectifier output dc voltage from the cathode-ray-tube grid.

Since there is no time constant such as the one that involves R and C in Fig. 11-31, we avoid the trace-brightness variations that occur when we use the circuit of Fig. 11-31.

c. Dc-coupled unblanking. In one widely used system, a floating power supply delivers a negative dc grid-to-cathode bias to the cathode-ray-tube, in series with the unblanking-pulse source (Fig. 11-34). We can adjust the beam intensity by the INTENSITY control in the floating-power-supply circuit. Since the entire system is dc-coupled we avoid time-constant problems that contribute to the trace-brightness variations mentioned in paragraph a above.

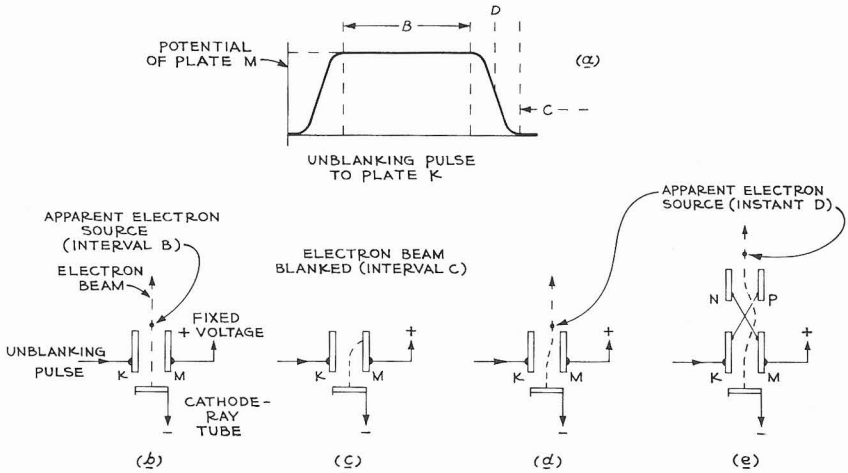

Fig. 11-35 System using special cathode-ray-tube deflection plates for unblanking. When we remove the positive unblanking voltage from plate K, the cathode-ray beam deflects to plate M which has a fixed positive potential. But during the actual unblanking and blanking processes, the electron beam seems to originate from a new point. This shift can distort the end of the display. So we add a second pair of plates, cross-connected to the first. These additional plates prevent the apparent electron-source point from shifting.

d. Unblanking deflection plates. In another system, we provide in the cathode-ray tube an additional pair of deflection plates specifically for unblanking. We hold one of these plates (plate M) at a fixed voltage, and apply the positive unblanking pulse (Fig. 11-35a) to the other plate (plate K) as shown in Fig. 11-35b. Thus during the forward motion of the spot (interval B, Fig. 11-35a) the unblanking pulse makes the potentials of the two plates equal so that the electron beam proceeds midway between the plates (Fig. 11-35b). At the end of the trace, the unblanking pulse drops to a lower potential (interval C, Fig. 11-35a). Thus the electron beam diverts to the more positive plate M (Fig. 11-35c), so that the beam doesn't reach the screen and the spot disappears.

But consider an instant *D* (Fig. 11-35a) during the unblanking-pulse fall. Here the beam isn't entirely diverted from the phosphor, but merely seems to originate at a new point (Fig. 11-35c). Thus, the very last part of the display shifts from its normal position on the screen. We overcome this difficulty by including a second pair of plates *N* and *P* (Fig. 11-35d) that are cross-connected to the first pair *K* and *M*. Thus any electrons reaching the screen seem to originate at their proper apparent source.

Chapter 12
POWER SUPPLIES

Here let us study some kinds of power supplies that are used in oscilloscopes and related instruments. A power supply of the type we shall consider converts the energy of an input sine-wave ac power-line waveform into dc energy at one or more voltages suitable for plate- and screen-supply voltages, etc., in the other sections of the instrument. Such a power supply consists of three basic sections: (a) the transformer that steps the ac power-line voltage up or down to suitable values, (b) the rectifier that converts the transformer ac output voltage into a pulsating dc voltage (dc with a superimposed ac voltage), and (c) the filter and regulating system that removes the output-voltage variations so that the output voltage is a nearly pure dc voltage that doesn't vary appreciably when we change the applied line voltage or the load current within rated ranges.

12-1 Transformers. The transformer should meet the requirements of reliability, reasonable weight and size, small heat losses, good regulation (minimum output-voltage change with load-current changes), and not unreasonably strong external magnetic fields that might influence surrounding circuits.

12-2 Rectifiers. A good rectifier allows current to pass readily in one direction, but only with great difficulty in the reverse direction. That is, the rectifier offers a smaller resistance to a forward current than to a reverse or "back" current. The ratio of these two resistances, called the front-to-back ratio, is a useful indication of the effectiveness of a rectifier.

It is also important to know how much current we can pass through a rectifier without damaging the rectifier. For example, the average rectified forward-current rating gives us a relative indication of the amount of direct current that we can safely draw from the rectifier itself. But the current through the rectifier varies considerably from one instant to another during the applied sine-wave interval; and we must not allow this instantaneous current to exceed the rectifier peak recurrent forward-current rating. Furthermore, when we turn on the power switch, the filter capacitors draw a large initial charging current through the rectifier. If we turn on the power switch in certain regions of the input-waveform cycle, exceptionally large rectifier currents might flow while the filter capacitors receive their initial charge. Since this large current surge doesn't recur immediately, the rectifier 1-cycle surge-current rating is often larger than the peak recurrent forward-current rating.

Another important characteristic is the peak-inverse-voltage rating that tells us the maximum instantaneous voltage we can apply in the reverse direction to the rectifier without either internal flashover or destructive internal reverse currents. A fourth major characteristic is the internal

rectifier voltage drop that the rectifier causes when a forward current flows. The rectifier forward resistance doesn't remain constant but depends somewhat upon the amount of current. But when the rectifier circuit supplies its rated dc output current, the dc voltage at the rectifier-output terminals is somewhat less than we would expect if the rectifier forward conduction were perfect. This difference between the ideal and the actual dc output voltage is the rectifier voltage drop.

Power supplies in oscilloscopes and related instruments customarily use either semiconductor rectifiers (selenium rectifiers, silicon rectifiers, or germanium rectifiers, as examples) or vacuum-tube rectifiers.

a. Selenium rectifiers. A selenium rectifier consists essentially of an aluminum sheet or disk with an evaporation-deposited metallic selenium film. Such an assembly passes current more readily in one direction than in the other. The voltage drop across a selenium-rectifier element is not insignificant; thus the rectifier dissipates a corresponding amount of energy. Therefore the rectifier includes a large cooling area in the form of an extension of the disk or plate beyond the actual rectifier contact-junction area. The peak-inverse-voltage rating of a selenium rectifier unit is not great, so we customarily operate several selenium-rectifier units in series by assembling them on an insulated bolt.

b. Silicon rectifiers. A silicon rectifier is a semiconductor device that allows current to pass more readily in one direction than in the other. The voltage drop across a silicon rectifier is less than the voltage drop across a selenium rectifier. Therefore the silicon rectifier dissipates less energy internally, so that instrument-cooling requirements are minimized. And silicon rectifiers don't usually need added external heat-dissipating area. Consequently the silicon rectifier is less bulky and more readily accessible for servicing. Furthermore, the silicon rectifier has a relatively large peak-inverse-voltage rating, so that we can use fewer rectifier units to rectify a given voltage.

When we turn the power switch on, the resulting heavy surge current can readily damage a silicon rectifier. To keep the surge current at a safe value, we often insert a small resistance of perhaps 5 or 10 ohms in series with the silicon rectifier.

c. Germanium rectifiers. The characteristics of a germanium-rectifier are somewhat like those of the silicon rectifier. The germanium-rectifier forward voltage drop is very small. Therefore we can use germanium rectifiers where we want only a very small internal power-supply impedance.

The peak-inverse-voltage rating and surge-current rating of a germanium rectifier are not great. Therefore we prefer the silicon rectifier for most general-purpose power supplies.

d. Vacuum-tube rectifiers. A vacuum-tube rectifier has the advantage that the back resistance is very large. Disadvantages include relatively

short life, large forward voltage drop, relatively large size, need for heater power, and heat-dissipating requirements.

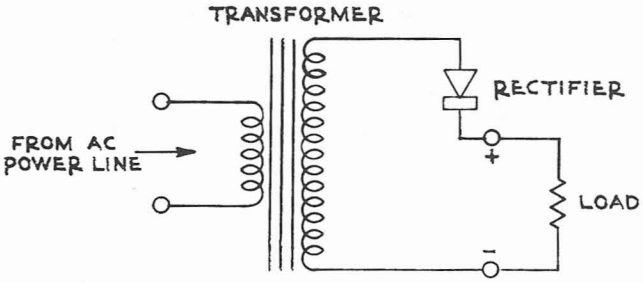

Fig. 12-1 Half-wave rectifier circuit. The transformer secondary winding applies a sine-wave ac voltage to a series circuit made up of the rectifier unit and the external load. The rectifier allows electrons to flow readily in a direction opposite to the arrow-point direction in the rectifier symbol. Electrons can flow only with great difficulty in the direction of the arrow point.

12-3 Rectifier circuits. a. Half-wave rectifier. Figure 12-1 shows a half-wave rectifier circuit. During one-half the ac cycle, the upper transformer-secondary terminal is positive while the lower terminal is negative, as shown in interval *A* of Fig. 12-2a. During this half-cycle interval, then, the rectifier passes current in a forward direction to the load as shown in interval *A* of Fig. 12-2b.* During interval *B*, the transformer-secondary voltage (Fig. 12-2a) reverses its polarity. But the rectifier prevents a reverse current from flowing so that during interval *B* no current flows in the load (Fig. 12-2b). Thus load current flows only during alternate half-cycle intervals. In one sense, we can consider the load current of Fig. 12-2b as a direct current upon which is superimposed an unwanted distorted alternating-current waveform as shown in Fig. 12-2c. To reduce this superimposed ac waveform we include a filter as discussed later.

The peak ac voltage induced in the transformer-secondary winding basically determines the peak voltage applied to the load. But the load current causes some voltage drop in the rectifier and in the transformer-secondary resistance. Therefore the peak voltage applied to the load is somewhat less than the secondary-winding peak induced voltage.

*Commercially available semiconductor diodes, including those intended for power-supply rectifier purposes, are often marked with the rectifier symbol that is used in Fig. 12-1. In this symbol, the arrow point indicates a direction opposite to the forward (easiest) electron flow. Thus the arrow-point connection corresponds to the anode (plate) of a vacuum diode rectifier, while the horizontal bar in the rectifier symbol of Fig. 12-1 corresponds to the cathode of a vacuum-tube rectifier. (But a few textbooks show the electron flow in the direction of the arrow point--contrary to commercial practice.)

b. Full-wave rectifier. Figure 12-3a shows a full-wave rectifier. This circuit consists essentially of two half-wave rectifiers like that of Fig. 12-1. When the upper transformer-secondary terminal is positive with respect to the secondary-winding center tap (interval *A* in Fig. 12-4a), the upper rectifier passes current to the load (interval *A* in Fig. 12-4b). Meanwhile the lower secondary terminal is negative with respect to the secondary center tap, so that the lower rectifier does not conduct and the lower half of the secondary winding (along with the lower rectifier) is inactive.

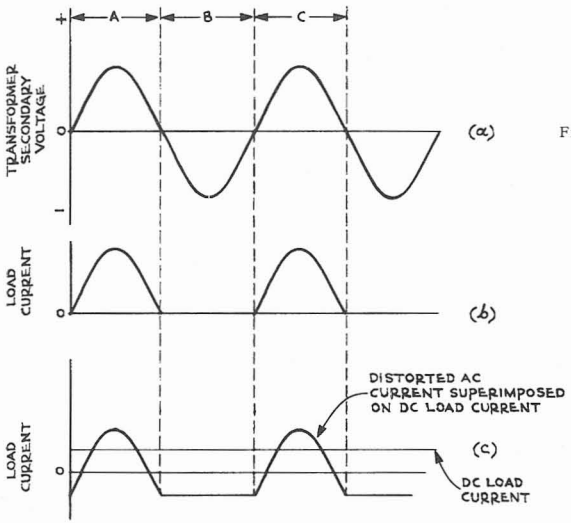

Fig. 12-2 (a) Sine-wave ac voltage applied by the transformer secondary in Fig. 12-1 to the rectifier and load in series.

(b) In Fig. 12-1 the resulting load current consists of half-sine-wave pulses as shown in this diagram.

(c) The load-current waveform of Fig. 12-2b can be considered as a steady dc current with a superimposed distorted-ac current.

During the next half-cycle interval (interval *B* in Fig. 12-4a), the lower secondary terminal is positive with respect to the center tap, so that the lower rectifier passes current to the load (interval *B* in Fig. 12-4b). Meanwhile the upper secondary terminal is negative with respect to the center tap, so that the upper rectifier does not conduct and the upper half of the secondary winding (along with the upper rectifier) is inactive. Thus load current flows during each half-cycle interval. The transformer-secondary center tap forms the negative output terminal, while the common connection between the rectifier units forms the positive output terminal.

Figure 12-3b shows an alternative form of the full-wave rectifier circuit. Here we connect the rectifier units with their polarities reversed to those shown in Fig. 12-4a. Therefore, when the upper transformer-secondary terminal is positive with respect to the center tap and the lower secondary terminal is negative, the lower rectifier conducts load current while the upper rectifier does not. When the secondary voltage later reverses its polarity, the upper rectifier conducts load current while the lower rectifier does not. In Fig. 12-3b, then, the secondary center tap forms the positive output terminal while the rectifier common connection forms the negative output terminal.

In either Fig. 12-3a or Fig. 12-3b, the peak ac induced voltage from either end of the secondary to the center tap basically determines the peak voltage applied to the load. Allowing the load-current voltage drops in the transformer and rectifier, then, we can expect the peak voltage applied to the load to be somewhat less than one-half the peak voltage induced in the total secondary winding.

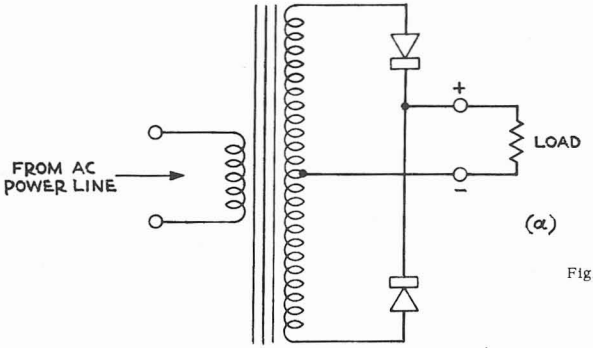

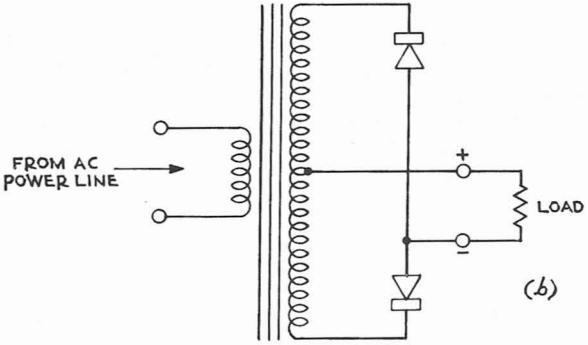

Fig. 12-3 (a) Full-wave rectifier circuit. When the upper transformer - secondary terminal is positive, the upper rectifier diode conducts load current. When the lower secondary terminal later becomes positive, the lower diode conducts load current. In both cases, the current flows through the load in the same direction.

(b) A variation of the full-wave rectifier circuit. When the upper transformer-secondary terminal is negative, the upper rectifier diode conducts load current. When the lower secondary terminal later becomes negative, the lower diode conducts load current. In both cases, the current flows through the load in the same direction.

c. Bridge rectifier. Figure 12-5 shows a bridge rectifier circuit. When the upper transformer-secondary terminal is positive and the lower terminal is negative, rectifiers *A* and *D* allow load current to pass, while rectifiers *B* and *C* do not conduct. But when the upper secondary terminal later becomes negative and the lower terminal positive, rectifiers *B* and *C* allow load current to flow while rectifiers *A* and *D* do not conduct. Thus the load-current waveform resembles that of Fig. 12-4c.

In the circuit of Fig. 12-5 the peak voltage applied to the load is the peak voltage induced in the entire transformer-secondary winding, less the voltage drops in the transformer secondary and in the rectifiers.

d. Voltage doubler. In the rectifier circuits just described, the voltage applied to the load is very roughly somewhat less than the transformer-

secondary peak ac voltage.* But there are several power-supply circuits that provide dc output voltages considerably greater than the transformer-secondary peak ac voltage. Let us consider two of these circuits.

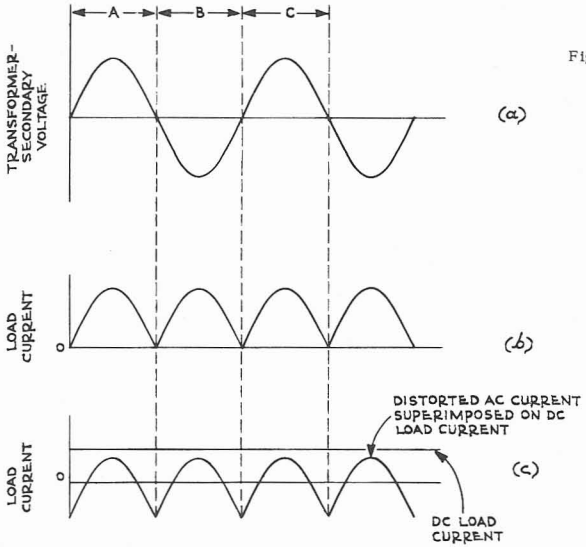

Fig. 12-4 (a) Sine-wave ac voltage applied by the transformer secondary in Fig. 12-3a to the rectifiers.

(b) The upper rectifier in Fig. 12-3a conducts during interval *A* in Fig. 12-4b, allowing a half-sine-wave current waveform to flow in the load. During interval *B*, the lower rectifier in Fig. 12-3a conducts, allowing a new half-sine-wave current waveform to flow in the load as shown in Fig. 12-4b.

(c) The load-current waveform of Fig. 12-4b can be considered as a steady dc current with a superimposed distorted-ac current.

In the voltage-doubler circuit of Fig. 12-6a, the dc output voltage is somewhat less than twice the secondary peak ac voltage. Let us follow a somewhat simplified form of the circuit action in Fig. 12-6a through the interval of one ac cycle. First assume that the upper secondary-winding terminal is negative while the lower terminal is positive (Fig. 12-6b). Thus rectifier *A* allows electrons to flow in C_1 so that C_1 charges to approximately the secondary peak voltage, in the polarity shown in Fig. 12-6b.

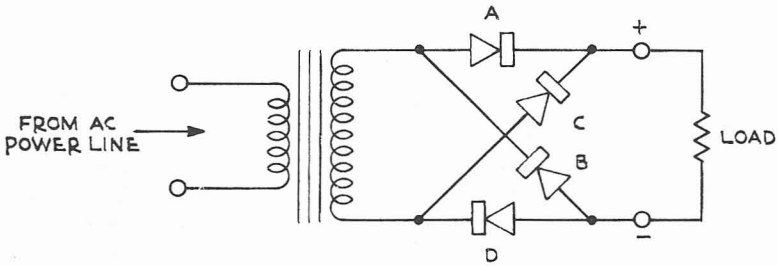

Fig. 12-5 Bridge-rectifier circuit. When the upper transformer-secondary circuit is positive, diodes *A* and *D* conduct load current. When the lower transformer-secondary terminal is positive at a later period, diodes *B* and *C* conduct load current. Thus the complete load-current waveform corresponds to that of the full-wave rectifier (see Figs. 12-4b and c).

*Except that in the full-wave rectifier circuits of Fig. 12-3a and b, the load voltage is roughly somewhat less than one-half the peak ac voltage induced in the total secondary winding.

Later in the ac cycle, the secondary upper terminal becomes positive and the lower terminal becomes negative, as shown in Fig. 12-6c. Now the sum of the voltages across C_1 and across the transformer-secondary winding is applied to C_2.* Rectifier B allows a charging current to flow in C_2. Thus C_2 charges to a voltage nearly equal to twice the peak secondary voltage, in the polarity shown in Fig. 12-6c. It is this large C_2 voltage that is applied to the load. Fig. 12-6d shows the path over which C_2 discharges electrons through the load. During each input ac cycle, C_2 receives a new charge by the actions shown in Figs. 12-6b and c, replenishing the charge lost in the form of load current in Fig. 12-6d.

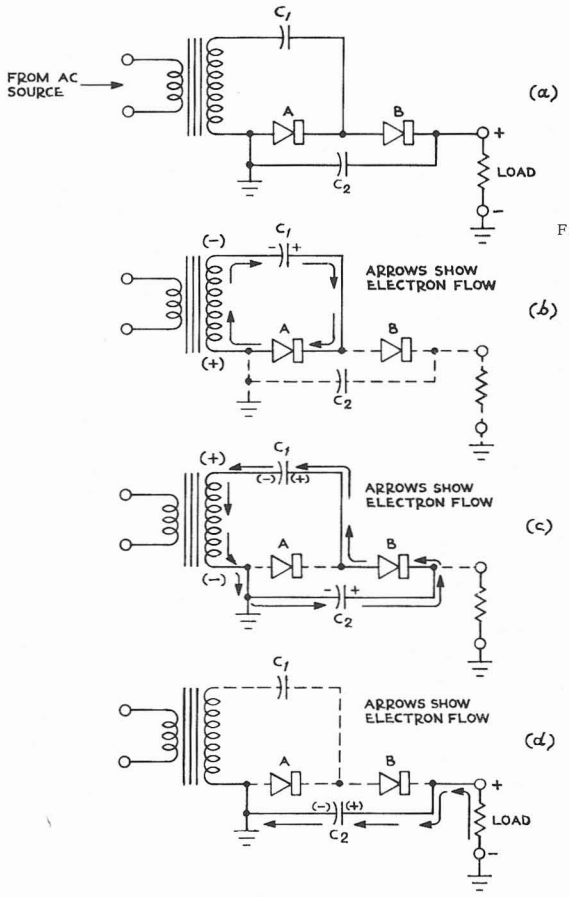

Fig. 12-6 (a) A form of voltage-doubler circuit that delivers a dc voltage that is somewhat less than twice the peak transformer-secondary ac voltage.

(b) Simplified action of the circuit of Fig. 12-6a during a half-cycle interval when the upper secondary terminal is negative. Rectifier A allows C_1 to charge to approximately the peak secondary voltage, in the polarity shown.

(c) During the next half-cycle interval, the upper secondary terminal is positive. Now the transformer secondary acts in series with C_1 to charge C_2 to approximately twice the peak secondary voltage, in the polarity shown.

(d) C_2 discharges into the load, applying to the load a voltage approximately twice the peak transformer-secondary voltage. During each cycle, the charge in C_2 is renewed by the actions shown in diagrams b and c.

*In Fig. 12-6c, we can consider that C_1 and the transformer secondary operate in the manner of two batteries connected in series-aiding, with the negative terminal of the first battery connected to the positive terminal of the second battery. Thus the total voltage between the two remaining battery terminals is the sum of the two battery voltages. Then a capacitor connected between these two remaining terminals would charge to this total battery voltage--in the same polarity as the battery.

e. Voltage tripler. We can extend the principle of Fig. 12-6 to make a voltage-tripler circuit, as shown in Fig. 12-7a. Let us follow some of the essential features of the action in Fig. 12-7a through one sequence of operations.

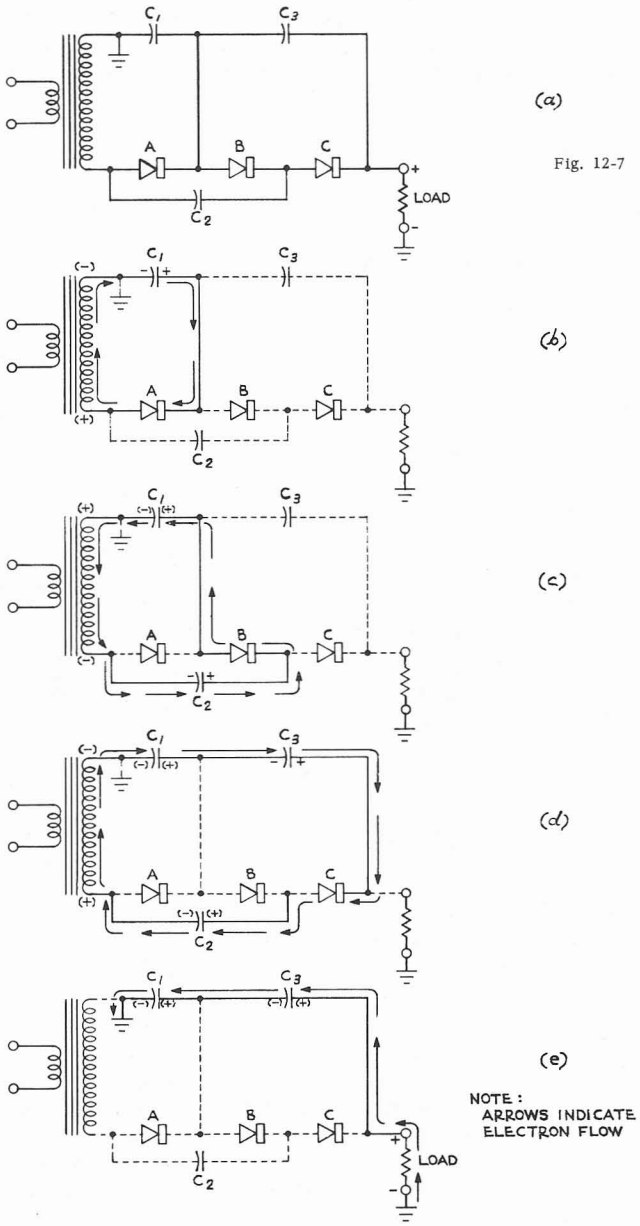

Fig. 12-7 (a) A form of voltage-tripler circuit that delivers a dc voltage that is somewhat less than three times the peak transformer-secondary voltage.

(b) Simplified action of the circuit of Fig. 12-7a during a half-cycle interval when the upper secondary terminal is negative. As in the voltage-doubler circuit of Fig. 12-6, C_1 charges to approximately the peak secondary voltage.

(c) During the next half-cycle interval, the upper secondary terminal is positive. Now the secondary acts in series with C_1 to charge C_2 to approximately twice the peak secondary voltage--just as in the action of Fig. 12-6c for the voltage-doubler circuit.

(d) During a still later half-cycle interval, the upper transformer-secondary terminal again becomes negative. The secondary voltage is now opposed by the voltage in C_1; but C_2 acts alone to charge C_3 to approximately twice the peak secondary voltage in the polarity shown.

(e) C_1 and C_3 in series discharge into the load, applying to the load a voltage approximately three times the peak secondary voltage. During succeeding cycles, the charges in the capacitors are renewed by the actions shown in diagrams b, c, and d.

As shown in Figs. 12-7b and 12-7c, the circuit actions during the first ac cycle resemble the voltage-doubler actions shown in Figs. 12-6b and c. Consequently, after the first ac cycle, capacitor C_2 in Fig. 12-7c is charged to approximately twice the peak secondary voltage.

Figure 12-7d shows the action during the next ac half-cycle. Here, three voltages act in series on C_3. These voltages are (1) the voltage across C_1--equal to the peak secondary voltage, (2) the voltage across C_2--equal to twice the peak secondary voltage, and (3) the secondary-winding voltage itself. Here, however, the secondary-winding negative terminal is connected to the negative terminal of C_1. That is, C_1 and the secondary winding now operate in series opposition--each canceling the effect of the other. Thus, C_2 alone charges C_3 to a voltage equal to twice the secondary peak voltage.

As shown in Fig. 12-7e, the voltage applied to the load is the voltage across C_3 in series with the voltage across C_1. Thus the total load voltage is approximately three times the peak secondary voltage. Figure 12-7e shows the path over which C_3 and C_1 discharge electrons through the load. Successive input ac cycles deliver new charges to C_3 and C_1 by the actions shown in Figs. 12-7b, c, and d, replenishing the charges lost in the form of load current in Fig. 12-7e.

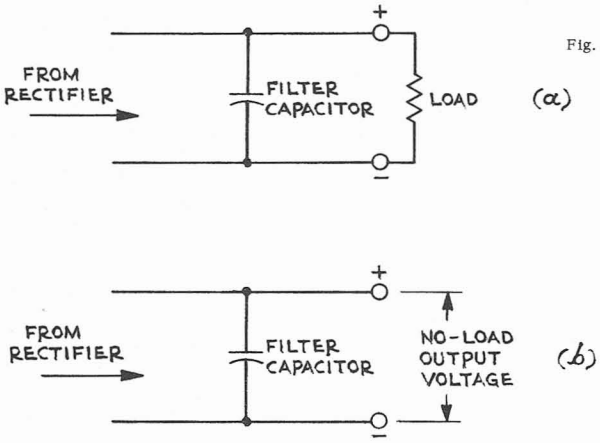

Fig. 12-8 (a) Filter capacitor for reducing the ripple (distorted ac) component in the rectifier-output waveform applied to the load. The filter-capacitor action is described with the aid of Figs. 12-8b, 12-9, and 12-10.

(b) To describe the filter-capacitor action, we first assume that the load is disconnected. Resulting waveforms are shown in Figs. 12-9a, b, and c.

12-4 Capacitive filter. Suppose, as an example, that we use a power supply to provide plate current for several tubes in an amplifier. As far as the power supply is concerned, we can consider that the cathode-to-plate circuits of the various tubes combine to form an external resistive load that draws current from the power supply.

Consider, for example, that the power supply is a transformer-and-rectifier circuit like that of Fig. 12-3, or one like that of Fig. 12-5. Then the load current follows the waveform of Fig. 12-4b (or, what is the same

thing, the load current follows the combined desired dc and unwanted distorted-ac forms of Fig. 12-4c).

To reduce the distorted-ac component in the current of Fig. 12-4b, we can connect a large filter capacitance (several microfarads, for example) across the rectifier output as shown in Fig. 12-8a. To analyze the filter-capacitor action, suppose first that we remove the external load as shown in Fig. 12-8b. And suppose also that we apply to the filter capacitor alone a single half-cycle of the rectifier output voltage as shown in Fig. 12-9a.* The rising rectifier-output voltage causes an inrush of current to the filter capacitor (Fig. 12-9b). At instant *B* the capacitor voltage reaches the peak

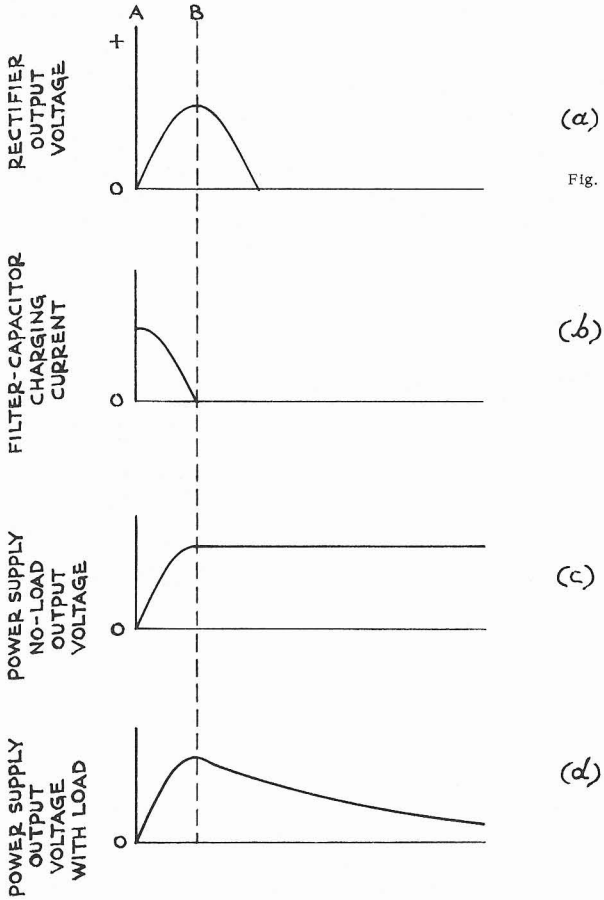

Fig. 12-9 (a) First assume that the rectifier applies to the filter capacitor of Fig. 12-8b a single half-cycle of voltage as shown here.

(b) Charging current in the filter capacitor of Fig. 12-8b when we apply the voltage waveform of Fig. 12-9a.

(c) As a result of the charging current of Fig. 12-9b, the voltage across the capacitor of Fig. 12-8b rises as shown here. Since the load is disconnected, the capacitor does not discharge and its voltage remains constant after the initial charge.

(d) If we connect the load to the rectifier-filter combination, as shown in Fig. 12-8a, the capacitor voltage no longer remains constant since the capacitor discharges into the load. Thus the power-supply output voltage, in response to a single half-cycle input voltage, follows waveform d.

*For simplicity assume no circuit impedance other than that of the filter capacitance. That is, let us neglect any forward-current opposition on the part of the rectifier or the transformer.

transformer-secondary voltage. The rectifier prevents reverse current from leaving the capacitor; therefore, since the capacitor cannot discharge, the capacitor voltage ideally remains at the peak transformer-secondary voltage as shown in Fig. 12-9c.

Next suppose we repeat this operation with an external load connected to the power supply as shown in Fig. 12-8a. Here, the operation is much the same as that described in the preceding paragraph--except that after the filter-capacitor voltage reaches the peak transformer-secondary voltage, the capacitor gradually discharges into the load. Therefore the power-supply output voltage falls off according to an *RC*-discharge curve as shown in Fig. 12-9d.

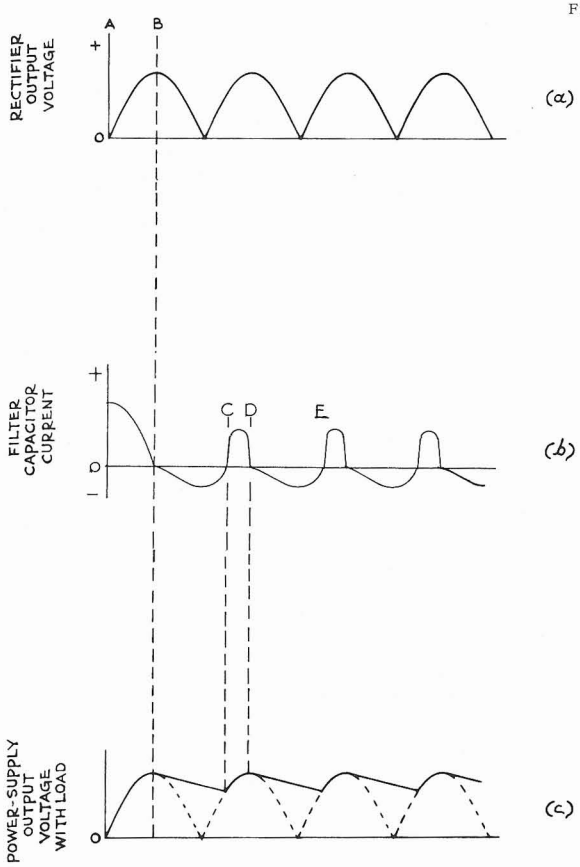

Fig. 12-10 (a) Actual series of voltage half-cycles applied by a full-wave rectifier to a filter-capacitor - and - load combination (Fig. 12-8a).

(b) Capacitor current in Fig. 12-8a in response to the applied-voltage waveform of Fig. 12-10a. In interval *AB*, the initial charging current is much like that of interval *AB* of Fig. 12-9b. In interval *BC*, reverse capacitor current flows as the capacitor discharges into the load. In interval *CD* a new charge is added to the capacitor when the rectifier-output voltage rises above the capacitor voltage. The charge added in interval *CD* replenishes the charge supplied to the load during interval *BC*.

(c) Power-supply output voltage delivered to the load during succeeding half-cycle intervals. In interval *BC* of Fig. 12-10c, the power-supply output voltage drops slightly as the filter capacitor discharges (interval *BC* in Fig. 12-10b). Then (interval *CD* in Fig. 12-10c) the rectifier-output voltage surpasses the capacitor voltage--bringing the output voltage up to a peak at instant *C* as well as charging the filter capacitor (interval *CD* in Fig. 12-10b). Note that the over-all output - voltage variations are much smaller than those without the filter capacitor.

Now, instead of a single half-cycle of voltage, suppose we apply to the circuit of Fig. 12-8a the repetitive voltage half-cycles that the rectifier normally delivers (Fig. 12-10a). At instant *B*, the capacitor voltage reaches the peak secondary voltage. Then the capacitor discharges a part of its charge into the load as shown in interval *BC*, Fig. 12-10b. In this interval

BC the capacitor voltage correspondingly drops somewhat as shown in Fig. 12-10c. When the rectifier-output voltage rises on its second half-cycle to the capacitor voltage (instant *C*, Fig. 12-10c), charging current again flows into the capacitor (interval *CD*, Fig. 12-10b). This operation now repeats itself periodically, so that the power-supply output voltage follows the solid-line waveform of Fig. 12-10c. Here the distorted-ac output component (ripple voltage) includes only relatively small variations rather than the extreme variations shown in Fig. 12-4b. (The amplitude of the initial capacitor-charging-current pulse in interval *AB* of Fig. 12-10b can be much greater than that of succeeding capacitor-current pulses. Thus both the rectifier and the capacitor must be able to handle this unusually large current pulse that occurs when we first apply power--see the second paragraph of Sec. 12-2; also Sec. 12-2b.)

To reduce the output-voltage ripple component even further, we might simply use a filter capacitor that has a greater capacitance. But the use of a single very large filter capacitance makes the rectifier-current peaks very large. This statement applies both to the initial 1-cycle current peak and to the succeeding repetitive current peaks (Fig. 12-10b). These large current peaks might overtax the rectifier. Also, as we shall describe later, we can get better ripple reduction for a given total filter capacitance if we use two separate filter capacitors, separated by a filter choke or by a regulating circuit.

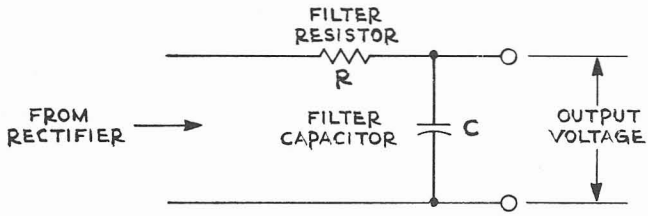

Fig. 12-11 *RC* filter. The time constant of the *RC* circuit involving the filter resistor *R* and the filter capacitor *C* limits the rapidity of any voltage variations at the output terminals. But voltage drops across *R* caused by dc load current seriously limit the usefulness of this circuit.

One way we can improve the filtering action is to include a series filter resistor as shown in Fig. 12-11. Here the time constant of the *RC* circuit involving the filter resistor *R* and the filter capacitor *C* retards any voltage change across *C*. However, the dc load current causes a dc voltage drop across *R* that might be prohibitive. Furthermore, if the load current fluctuates markedly, the output voltage might fluctuate beyond acceptable limits. Thus, in oscilloscopes and related instruments, we can use *RC* power-supply filters for only a few applications.

12-5 Inductive filter. Another ripple-reduction method we can use is to connect an inductor (filter choke) in series with the rectifier output circuit, as shown in Fig. 12-12. To analyze the filter-choke action, suppose first

that we apply to the circuit of Fig. 12-12 a single half-cycle of the rectifier-output voltage as shown in Fig. 12-13a. As a result, the load current rises (interval *AB* in Fig. 12-13b). But the inductor develops a back emf that opposes the current rise. Therefore the load current rises more slowly than does the applied voltage. After instant *B*, the applied voltage falls (Fig. 12-13a). Now the inductor back emf opposes the current fall, so that

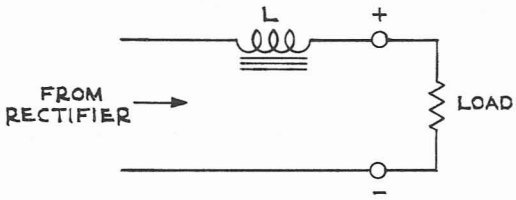

Fig. 12-12 Inductive filter. The filter choke *L* acts as described in Figs. 12-13 and 12-14 to reduce the ripple component in the power-supply output voltage and current.

this inductor voltage actually aids the rectifier output voltage. The resulting current waveform is shown in interval *BC* of Fig. 12-13b. After instant *C*, the rectifier no longer delivers any output voltage; therefore the load current falls off according to an *RL* current decay curve as shown in Fig. 12-13b.

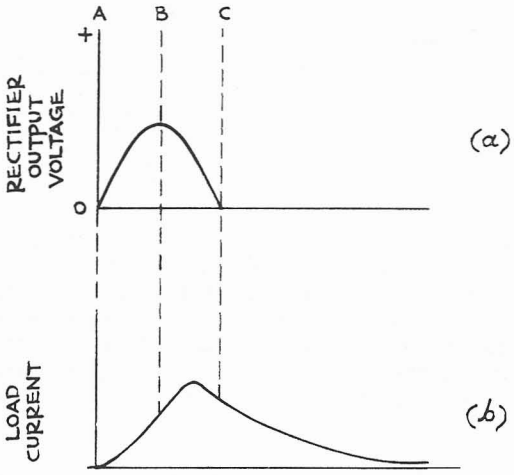

Fig. 12-13. (a) First assume that the rectifier applies to the filter choke and load of Fig. 12-12 a single half-cycle of voltage as shown here.

(b) Load current in Fig. 12-12 in response to the rectifier-output voltage waveform of Fig. 12-13a. The filter choke *L* prevents the load current from rising as fast as the rectifier-output voltage (interval *AB*). Thus the load current reaches its peak at a later instant than the rectifier-output voltage peak. When the rectifier-output voltage falls off (interval *BC*, Fig. 12-13a), the *RL* time constant of the filter choke and load allows the load current to drop off only slowly as shown in diagram b.

Now, instead of a single half-cycle of voltage, suppose we apply to the circuit of Fig. 12-12 the repetitive voltage half-cycles that the rectifier normally delivers, as shown in Fig. 12-14a. The initial load current (interval *AB* in Fig. 12-14b) rises in the manner we have just learned. Here, however, when the current begins to fall (after instant *B*), the rectifier output voltage rises and thus keeps the current at a relatively high value. In this

way we keep the load current nearly constant, as shown in Fig. 12-14b. Thus the power-supply output current (and voltage across the resistive load) has a steady dc value with a relatively small superimposed ripple voltage.

The filter inductor prevents the instantaneous load current from ever reaching the peak value that the current would reach without the inductor. Correspondingly, the power-supply output voltage never reaches the peak rectifier-output voltage.

To reduce the output ripple component still further, we might simply use a filter choke that has a greater inductance. But the use of a very large filter inductance alone reduces the dc output voltage markedly.

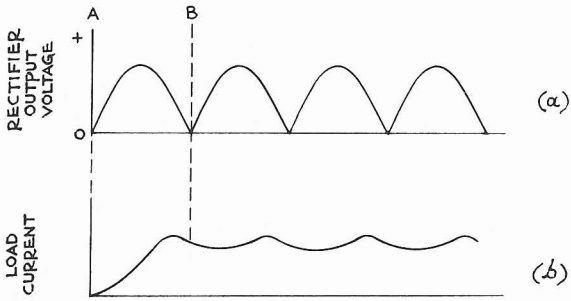

Fig. 12-14 (a) Actual series of voltage half-cycles applied by a full-wave rectifier to a filter - choke - and - load combination (Fig. 12-12).

(b) Load current in Fig. 12-12 in response to the applied-voltage waveform of Fig. 12-14a. During the first half-cycle of input voltage, the load current rises as shown in Fig. 12-13b (interval *AB* in Fig. 12-14b). Then the load current begins to fall as shown in Fig. 12-13b. Here, however, the second half-cycle of the rectifier-output voltage rises and helps keep the current at a relatively high value. This action repeats itself during succeeding half-cycle intervals. Note that the overall load-current variations are much smaller than those without the filter choke.

12-6 *LC* filter. In Sec. 12-4, we learned that a filter that consists of a single capacitor places a large peak-current load on the rectifier, thus limiting the dc load current that we can safely draw. On the other hand, we learned in Sec. 12-5 that a filter that consists of an inductor alone limits the dc output voltage that the power supply delivers. We get a better compromise between output voltage and available current if we use a filter that includes both inductance and capacitance. One form of such a filter is shown in Fig. 12-15a.

In a voltage doubler like that of Fig. 12-6, the capacitor C_2 (necessary to the voltage-doubling action) also serves as the filter-input capacitor (C_1 in Fig. 12-15a). In a voltage tripler like that of Fig. 12-7, the capacitors C_1 and C_3 in series (necessary to the voltage-tripling action) serve as the filter-input capacitor (C_1 in Fig. 12-15a).

Filters for full-wave rectifiers (Sec. 12-3b) and bridge rectifiers (Sec. 12-3c) often include an input filter choke (L_1 in Fig. 12-15b). Such an

arrangement somewhat reduces the output voltage, but holds the voltage steadier with load variations and at the same time reduces the rectifier peak-current burden. Here L_1 is usually of lower inductance than L_2.

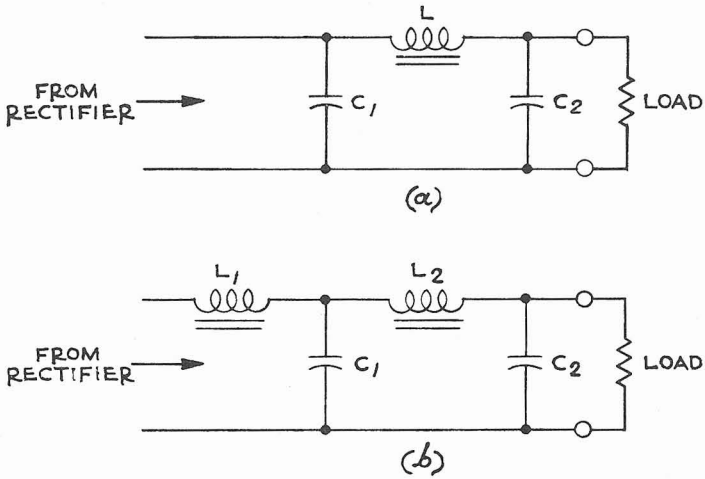

Fig. 12-15 Two practical forms of *LC* power-supply filters. Such filter circuits allow a better compromise between output voltage and rectifier-peak-current burden than either the filter capacitor or the filter choke alone.

12-7 Low-voltage power supply. a. General arrangement. Figure 12-16 shows a typical complete low-voltage power supply for an oscilloscope. As we shall see, this power supply actually involves several interrelated power supplies that operate together as a system. This system delivers regulated and filtered dc voltages of -150 volts, +100 volts, +225 volts, +350 volts, and +500 volts, as well as an unregulated dc voltage having a nominal value of +325 volts. The power supplies in this system operate from a common power transformer T601.

Without attempting to follow all the details here, let us note briefly an arrangement that we shall take up more thoroughly later. In Fig. 12-16, contact assemblies K601-1, K601-2, K601-3, and K601-4 are parts of the magnetic relay K601. When the oscilloscope is warmed up and operating, relay K601 is operated. Then the movable contacts in assemblies K601-1, K601-2, K601-3, and K601-4 are in their downward (closed) positions. This arrangement connects the dc output voltage from the +100-volt-supply rectifier V672 in series with the dc output voltage from rectifier V702 to provide the +325-volt unregulated output. We also apply this unregulated +325-volt output to the +225-volt-supply regulating system to obtain the +225-volt output. Furthermore, we connect the output of rectifier assembly V732 in series with the +325-volt unregulated output to derive the input dc voltage for the +350-volt-supply regulating system. And we connect the output of rectifier assembly V762 in series with the +350-volt output to

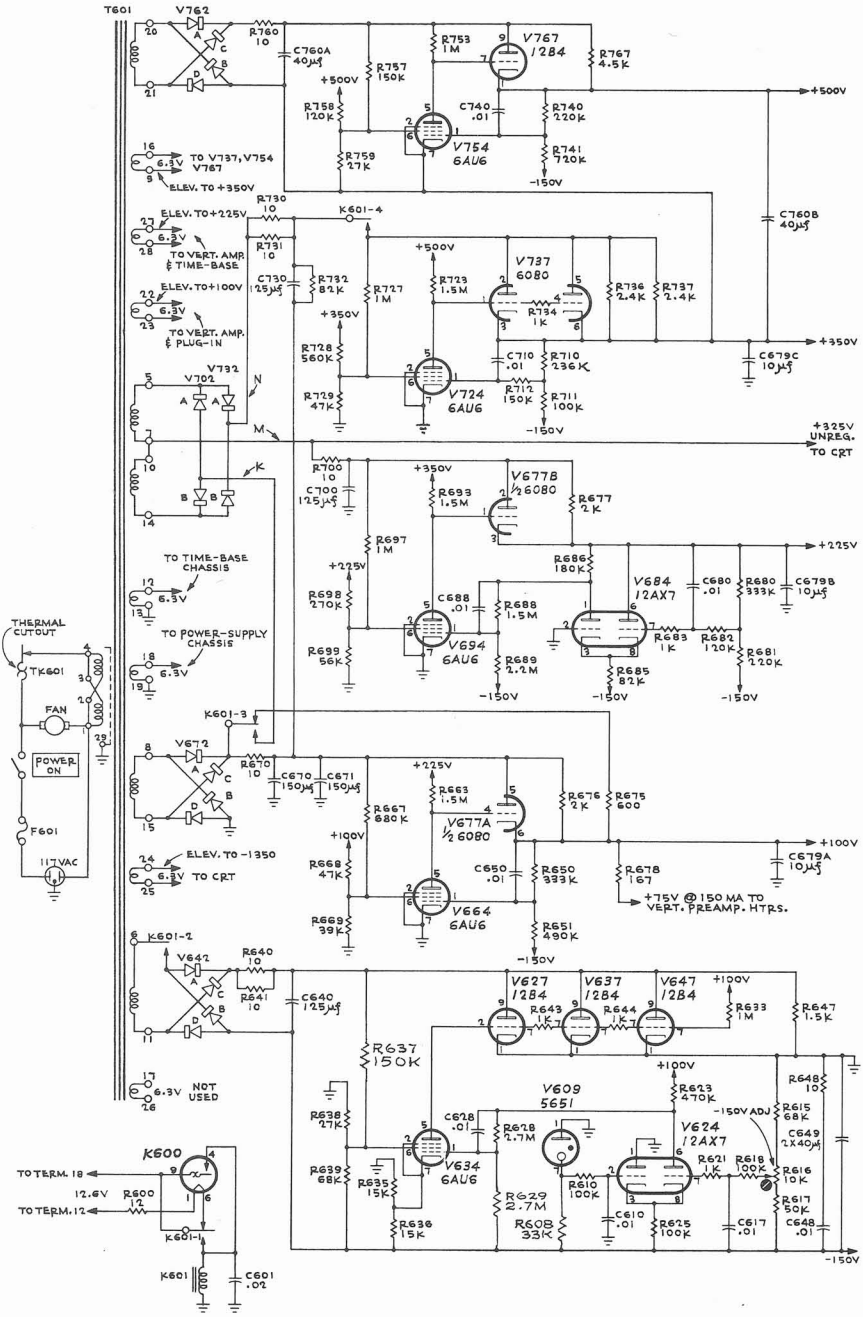

Fig. 12-16 Typical low-voltage power supply for an oscilloscope, delivering regulated-and-filtered dc output voltages of -150 volts, +100 volts, +225 volts, +350 volts, and +500 volts, as well as an unregulated +325-volt output.

derive the input dc voltage for the 500-volt-supply regulating system. Without going into details yet, we see that if K601 is unoperated, then these series interconnections are opened so that no voltages are delivered by the +225-volt, +350-volt, and +500-volt supplies.

The heater windings of T601 supply rated voltages for the heaters of most of the tubes in the oscilloscope. Exceptions are certain tubes whose heaters, connected in series, receive direct current from the +100-volt supply.*

b. Initial operation. When we turn on the power switch in the system of Fig. 12-16, we first want to allow time for the heaters of the tubes in the oscilloscope to reach operating temperature before we energize the dc supplies to apply most of the plate and screen voltages. (However, in turning on the power switch, we do have to energize the +100-volt dc supply to operate the heaters of those tubes mentioned in Sec. 12-7a whose heaters operate from the +100-volt supply.) It is to allow this initial heater-warmup time that we include the thermal time-delay relay K600 and its associated magnetic relay K601.

The power switch applies ac power-line voltage to the primary of transformer T601. Therefore the heater windings of T601 apply power to the heaters of those tubes in the oscilloscope that operate with ac heater voltage. Transformer terminals 12 and 18 act in series-aiding to apply 12.6 volts ac to the circuit of the thermal time-delay relay K600**. This time-delay relay requires an interval of perhaps 30 seconds to close. During this heater-warmup interval, contacts 4 and 9 of K600 remain open so that the magnetic relay K601 remains unoperated. While K601 is unoperated, the K601 contacts mentioned in Sec. 12-7a remain unoperated in their upper positions in Fig. 12-16. Therefore the dc supplies (other than the +100-volt supply) deliver no output voltage. But during the warmup period, contact assembly K601-3 applies the output of the bridge rectifier V672 (Sec. 12-3c) through R675 and R678 to those heaters operating in series from the +100-volt supply. Note that this contact assembly now bypasses the +100-volt-supply voltage-regulating system involving V664 and V677A, to be described later.

After the heater-warmup interval, the time-delay relay K600 closes its contacts 4 and 9. Thus the magnetic relay K601 operates. Consequently, contact assembly K601-1 removes the ac voltage from K600, but before K600 can open, this contact assembly K601-1 locks the holding circuit to the coil of K601. Then K601 remains operated until we turn off the power. Simultaneously, relay K601 operates its contact assemblies K601-2, K601-3, and K601-4. When contact assembly K601-3 operates, R675 is taken out

*These latter tubes include the vertical-preamplifier tubes and, in many oscilloscopes with the delaying-sweep feature, certain tubes associated with the delaying-sweep function.

**K600 is rated for an applied voltage of 6 volts. To maximize operation reliability, K600 operates here from 12.6 volts through R600, so that the applied voltage is at least 6 volts even if the line voltage is somewhat low.

of the circuit so that the vertical-preamplifier heater current (and heater current for any other tubes supplied by the +100-volt dc supply) must flow through the +100-volt-supply regulating circuit (to be described shortly).

c. -150-volt power supply. When contact assembly K601-2 operates, this operating applies ac energy from the transformer to the rectifier assembly V642. This rectifier assembly is a full-wave bridge system (Sec. 12-3c). The voltage-regulating system operates in the manner described in Sec. 7-3. (You will probably want to review Sec. 7-3 at this point.) In Fig. 12-17, the regulating circuit for the -150-volt power supply includes V609, V624, V634, V627, V637, and V647.

In addition to the desired dc output voltage, the rectifier output includes an undesirable ripple component. The filter capacitors C640 and C649 greatly reduce this output ripple. Any remaining ripple voltage appears across the voltage divider that is made up of R615, R616, and R617. Therefore a fraction of this ripple voltage appears at the grid (pin 7) of V624. Then V624 and V634 amplify this ripple voltage. This amplified ripple voltage appears at the grids of the paralleled series-regulator tubes V627, V628, and V629. But this amplified ripple voltage arrives at the regulator-tube grids in a polarity opposite to that which would oppose the output ripple voltage--as you can check. Therefore we include C617 to bypass any original output ripple signal around the circuit between the grid (pin 7) and the cathode of V624.

In other respects the regulator system in the -150-volt supply functions to reduce output ripple voltage. Any ripple between the -150-volt output point and ground reaches the grid (pin 2) of V624 by way of C610. This input ripple voltage is amplified by V624 acting as a cathode-coupled amplifier (Sec. 7-1). Therefore the ripple output voltage at the plate (pin 6) of V624 has the same polarity as the ripple voltage at the -150-volt output. C628 couples this ripple output voltage to the grid of V634. This output ripple voltage, further amplified by V634, arrives at the series-regulator-tube grids in a polarity such as to oppose the original output ripple--as you can check.

Furthermore, the screen-to-cathode supply voltage for V634 comes from the unregulated output of the rectifier assembly V642. But the screen voltage of V634 influences the plate current of V634. Therefore V634 provides a certain amplifying action for the screen ripple voltage, with the screen of V634 acting somewhat as a control grid for this amplifying action. Thus the amplified rectifier-output ripple reaches the regulator-tube grids in a polarity such as to reduce the total output ripple. Similar ripple-reduction arrangements are included in the regulating-amplifier screen circuits for the other low-voltage supplies in Fig. 12-16.

R610 suppresses any tendency of the voltage-reference tube V609 to oscillate as a gas-tube oscillator.

The small resistances R640 and R641 suppress unusually large current peaks that might flow in the rectifiers V642 under heavy-load power-switching conditions. In addition, if a short circuit or other overload occurs,

it is likely that these small resistances R640 and R641 will burn out before any other component fails; thus R640 and R641 serve somewhat as inexpensive fuses. Furthermore, R640 and R641 have a maintenance use. If you measure and record the voltage drop across these resistors in a normally operating oscilloscope, you can use this information later to tell you whether or not the power-supply load remains normal (assuming that you are using the same plug-in preamplifier type and that you operate the time-base system in a specified manner). Small series resistors are included at similar points in the other low-voltage supplies.

d. +100-volt supply. The +100-volt supply includes the full-wave bridge-rectifier assembly V672 and the regulating-system tubes V664 and V677A. The rectified-dc output voltage from rectifier assembly V672 exceeds the 100-volt output voltage that we want from the +100-volt supply. To reduce this rectifier-output voltage to the desired value of 100 volts, we pass the load current through the plate-to-cathode circuit of the series-regulator tube V677A. If we change the grid voltage of V677A (in a manner described in the next paragraph), we change the plate-to-cathode voltage drop across V677A for a given load current. Thus, by controlling the grid voltage of the series-regulator tube V677A, we can control the +100-volt-supply output voltage. (R676 shunts the plate-to-cathode circuit of V677A so that V677A doesn't have to pass the entire load current.)

The +100-volt supply uses the regulated -150-volt-supply output voltage as a reference voltage. Thus, if both the -150-volt supply and the +100-volt supply are operating properly, there should be a constant 250-volt difference between the output voltages from these two supplies. If this difference voltage changes, some fraction of this voltage change appears at the grid of the amplifier tube V664. (The fraction of the voltage change actually reaching the grid of V664 depends upon the voltage-division ratio involving values of R650 and R651.) This voltage change at the grid of V664 appears amplified and inverted at the plate of V664, and arrives at the grid of the series-regulator tube V677A. Depending upon the polarity of this voltage change at the grid of V677A, current passes either more readily or less readily in the plate-to-cathode circuit of V677A. Thus, this amplified voltage change, arriving in the appropriate polarity at the grid of the series-regulator tube V677A, controls the plate-to-cathode voltage drop across V677A. In this way we keep the output voltage at its rated value.

The precision resistors R650 and R651 have values such that the +100-volt-supply output voltage is maintained at +100 volts rather than at some neighboring value.

C650 couples any output ripple voltage to the grid of amplifier V664. The resulting output ripple voltage at the plate of V664 reaches the grid of the series-regulator tube V677A in a polarity such as to oppose the original ripple voltage.

e. +325-volt unregulated supply. The +325-volt unregulated supply uses the windings between terminals 5 and 7 and between terminals 10

and 14 of transformer T601. These two windings, connected in series, serve as a center-tapped winding. We apply the ac output voltage from this center-tapped winding to rectifier assembly V702. (We shall consider rectifier assembly V732 later.) Rectifier assembly V702 operates as a full-wave rectifier (Sec. 12-3b). Here we connect the rectifiers in V702 in a manner corresponding to Fig. 12-3b, so that the rectified-dc voltage at the winding center tap (point M) is positive, while the rectifier common point (point K) is negative. We connect the resulting rectified-dc voltage (between points K and M) in series with the unregulated rectified-dc voltage developed at the output of rectifier V672 in the +100-volt supply. We use the resulting total unregulated dc voltage (marked +325 V UNREG.) as the plate voltage for the oscillator tube in the high-voltage supply (Sec. 12-8). The value of this +325 V UNREG. output voltage is only nominally 325 volts. The actual voltage might normally differ appreciably from +325 volts. But these normal variations present no problem in the high-voltage supply that receives its power input from the +325-volt unregulated source; for the high-voltage supply has its own regulating system that compensates for these and any other normal operating variations.

f. +225-volt supply. To provide a regulated +225-volt source, we apply the +325 V UNREG. output to the regulating system that includes V684, V694, and V677B. In this regulating system, too, we use the -150-volt-supply voltage as a reference voltage. Here, there should be a constant +375-volt difference between the output voltages from the -150-volt supply and the +225-volt supply. If this difference voltage varies, the voltage divider composed of R680 and R681 applies a fraction of this voltage change to the grid (pin 7) of the cathode-coupled amplifier V684. This voltage change, amplified by V684 and V694, reaches the grid of the series-regulator rube V677B in such a polarity as to oppose the original difference-voltage change. The precision resistors R680 and R681 have values such that the +225-volt-supply output voltage is maintained at +225-volts, rather than at some neighboring value.

C680 couples any output ripple voltage to the grid of amplifier V684. C688 couples the resulting V684-output ripple voltage to the grid of amplifier V694. V694 applies the ripple voltage, in a further-amplified form, to the grid of regulator tube V677B in a polarity such as to oppose the original ripple voltage.

g. +350-volt supply. In Sec. 12-7e we learned that point M in Fig. 12-16 operates at an unregulated voltage of about +325 volts. Now consider rectifier assembly V732. This rectifier assembly operates as a full-wave rectifier with the rectifying units connected as shown in Fig. 12-3a. Therefore the common point of rectifier V732 (point N) is positive with respect to the winding center tap (point M). Thus the voltage at point N is appreciably higher than +325 volts. We apply this positive voltage to the regulator system involving V724 and V737, to provide a regulated +350-volt supply. This regulating circuit operates in a manner essentially identical to that described for the +225-volt supply.

h. +500-volt supply. The +500-volt supply uses the bridge-rectifier assembly V762. We connect the rectified-dc output voltage from rectifier

assembly V762 in series with the regulated dc output from the +350-volt supply. The resulting total voltage exceeds +500-volts. We apply this positive total voltage to the regulator system involving V754 and V767, to provide a regulated +500-volt supply. This regulating circuit operates in a manner essentially identical to that described for the +225-volt supply.

i. Thermal cutout and fuse. The thermal cutout (TK601 in Fig. 12-16) is a protective device that opens the transformer-primary circuit if the temperature inside the oscilloscope rises above a safe value. When the oscilloscope interior returns to a safe temperature, TK601 closes so that we can again operate the instrument. An abnormally high interior temperature might result from one of these causes:

1. The air filter has not been cleaned. See your instruction manual.

2. The oscilloscope is located where air cannot circulate freely into and out of the oscilloscope.

3. Or, in some cases, the temperature of the surrounding air or of nearby objects might be abnormally high.

In the circuit of Fig. 12-16, the ventilating fan continues to operate even after TK601 removes power from the rest of the oscilloscope. (But in some oscilloscopes the thermal cutout cuts off the fan power as well.)

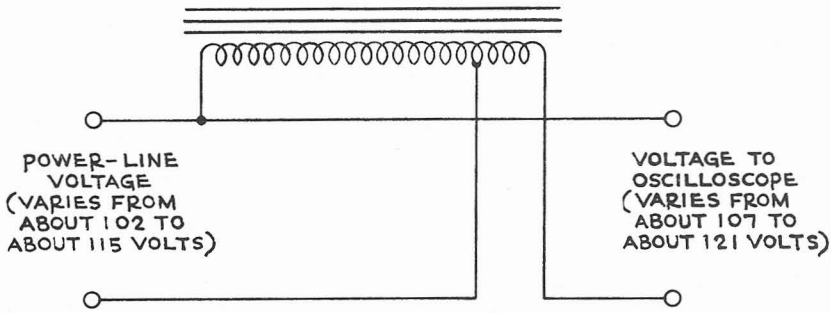

Fig. 12-17 An autotransformer arrangement that you can use if the power-line voltage is consistently or often lower than the rated minimum line voltage for your oscilloscope. Voltages shown are examples only.

If the fuse F601 blows, the entire instrument shuts off. Replace the fuse with another of the same rating. There are two fuse characteristics that you must keep in mind for a correct fuse replacement: (a) the current rating in amperes, and (b) whether the fuse is a fast-blow or a slow-blow variety. Most oscilloscopes and related instruments carry a fuse-data label near the fuse holder. (Your Field Engineer can help you with other fuse information.) If the replacement fuse blows, check the oscilloscope for internal short circuits or overloads before again replacing the fuse.

j. Power-supply operational characteristics. In the power supply of Fig. 12-16, the regulating system (in conjunction with filter capacitors) achieves a high degree of ripple reduction. Thus filter chokes are neither needed nor included; as a result, savings occur in weight, size, and cost.

The series connections among the rectifier dc output voltages (stacked power supplies) allow efficient, light-weight, and reliable design of transformers and rectifiers. Pointers for troubleshooting stacked power supplies like that of Fig. 12-16 include these:

IMPORTANT

1. Unless you are certain that it is necessary, don't tamper with the -150 V ADJ. control or change the output voltage of any power supply (as by changing the precision voltage-divider resistors). Any such change generally requires a complete recalibration of the oscilloscope. See your instruction manual or recalibration procedure.

2. In checking power supplies, use an accurate voltmeter. In general, the -150-volt output in Fig. 12-16 is adjusted to its rated voltage within a small fraction of one percent. The other power-supply output voltages are typically checked within one or two percent. These required accuracies are appreciably better than those you can usually expect from a bench voltmeter.

3. If the output voltage from one of the low-voltage supplies is out of tolerance, a good starting procedure in troubleshooting is as follows:

(a.) Check the output voltages from the other power supplies as well. It is true that a lower-than-normal output voltage from the +100-volt supply, for example, might be associated with a fault or an overload connected with that supply. On the other hand, the -150-volt-supply output serves as a reference voltage for all the other supplies; therefore we can't expect any other supply to deliver its correct output voltage if the -150-volt-supply output voltage isn't correct. Also, the rectified-dc voltage from the +100-volt supply provides part of the rectified-dc voltage used in the other positive-voltage supplies; therefore if the +100-volt rectifier fails, for example, we can hardly expect the other positive supply voltages to be correct. Interdependencies of this kind exist among the other positive-voltage supplies. Furthermore, tubes V624 and V634 in the -150-volt supply depend for their plate voltages upon the +100-volt supply; therefore the -150-volt supply might not operate properly if the +100-volt supply delivers a voltage greatly different from 100 volts. Similar interdependencies exist among the other low-voltage supplies.

(b.) Suppose we establish that one of the low-voltage supplies delivers an incorrect voltage because of a fault in that supply itself, rather than in the load that it feeds or in some other low-voltage supply. To find out whether the regulating system is operating or not, we can change the applied ac primary line voltage within the specified range (often 105 to 125 volts)

as by means of a Variac, Powerstat, etc. The power-supply dc output voltage should remain constant. If this dc output voltage varies, the fault might lie in a tube or component in the regulating system. Or the trouble might be that the rectifier, or possibly the transformer, has a fault that places the dc regulator-input voltage outside the range that the regulator can correct. But if, on the other hand, the power-supply dc output voltage remains constant at a definitely incorrect voltage it is possible that a precision voltage-divider resistor in the regulating system has changed value, or that the regulating-system tube whose grid receives the dc output voltage from the precision-resistor voltage divider is faulty.

k. Low or high power-line voltage. A properly operating power supply of the general form shown in Fig. 12-16 can maintain its rated dc output voltages, under normal load-current variations, even though the power-line voltage varies over a wide range (often 105 to 125 volts). If the power-line voltage is sometimes or consistently below the rated range but not ordinarily above the rated range, perhaps the best remedy is to use an autotransformer as shown in Fig. 12-17.

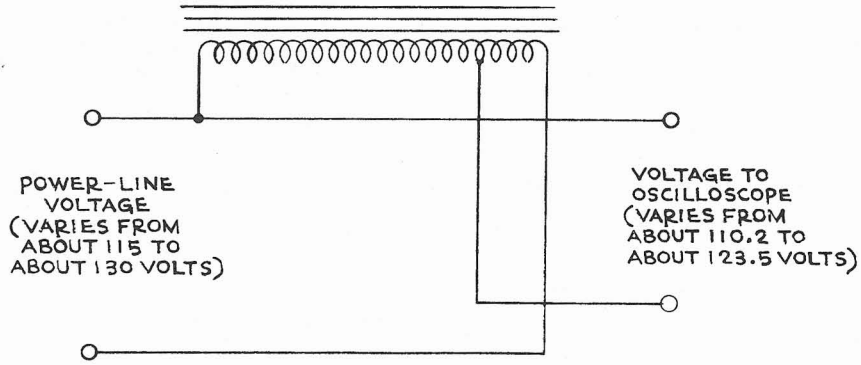

Fig. 12-18 An autotransformer arrangement that you can use if the power-line voltage is consistently or often higher than the rated maximum line voltage for your oscilloscope. Voltages shown are examples only.

If the power-line voltage is sometimes or consistently above the rated range but not ordinarily below the rated voltage, we can use the autotransformer arrangement of Fig. 12-18.

Instead of an autotransformer, we can use an ordinary low-voltage transformer (such as a filament transformer of adequate current rating) to bring a high or low line voltage into the rated range for the oscilloscope power input. Figure 12-19 shows the required connections. By reversing the connections to one of the transformer windings, we can either raise or lower the voltage applied to the oscilloscope.

If the power-line voltage varies both above and below the rated voltage range, we can consider using a voltage-regulating transformer that maintains an output ac voltage within the rated range. Such voltage-regulating transformers are available commercially.

IMPORTANT

An oscilloscope power supply of the general form shown in Fig. 12-16 requires a power-line input voltage that is close to a sine wave. But many voltage-regulating transformers seriously distort the power-line waveform. If you use a regulating transformer, be sure that the voltage-regulating transformer is of a type that doesn't significantly distort the power-line waveform.

12-8 High-voltage power supply. The cathode-ray tube in your oscilloscope requires a source of several thousand volts at a small current--usually less than 1 milliampere. Figure 12-20 shows an example of a power supply that meets this need. Here the ac source is a Hartley oscillator (V800) that operates at about 50 kilocycles. The oscillator coil serves as the high-voltage power-transformer primary.

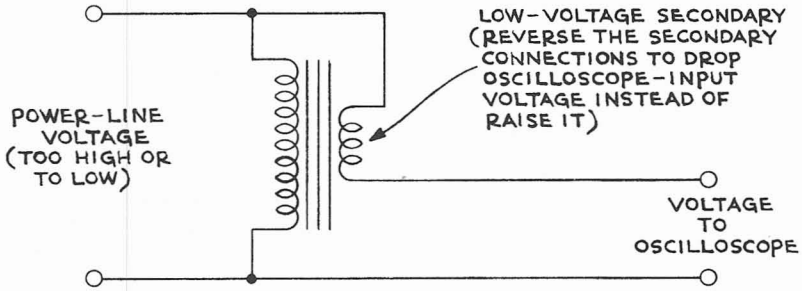

Fig. 12-19 A simple arrangement for bringing a line voltage that is too high or too low within the rated input-voltage range of your oscilloscope. As a transformer, you might use a filament transformer having a current adequate for the power-input circuit to your oscilloscope. By reversing the connections to one of the transformer windings, you can either raise the oscilloscope-input voltage or lower it.

We apply the voltage from one of the transformer-secondary windings to a voltage tripler that utilizes rectifier tubes V832, V842, and V852 (see Sec. 12-3e). (Instead of grounding the upper terminal of the transformer winding that drives the voltage tripler--as in Fig. 12-7--the arrangement of Fig. 12-20 completes the circuit to ground by way of the +100-volt low-voltage supply.) The output voltage from the tripler (+8650 volts) provides the high positive voltage for the cathode-ray tube. C836 and R836 serve as an *RC* filter for this +8650-volt supply (see Sec. 12-4).

In the circuit of Fig. 12-20, we operate the cathode-ray-tube cathode at -1350 volts.* To develop this negative dc voltage, we separately rectify

*Thus the over-all electron-accelerating voltage between the cathode-ray-tube cathode and phosphor is the difference between +8650 volts and -1350 volts, or 10,000 volts.

Fig. 12-20 Typical high-voltage supply to operate a cathode-ray tube. This supply delivers a +8650-volt output for the accelerating anode and a -1350-volt output for the cathode-ray-tube cathode (thus providing a total electron-beam-accelerating voltage of 10,000 volts). The system also includes a 1450-volt floating power supply for a dc-coupled unblanking circuit.

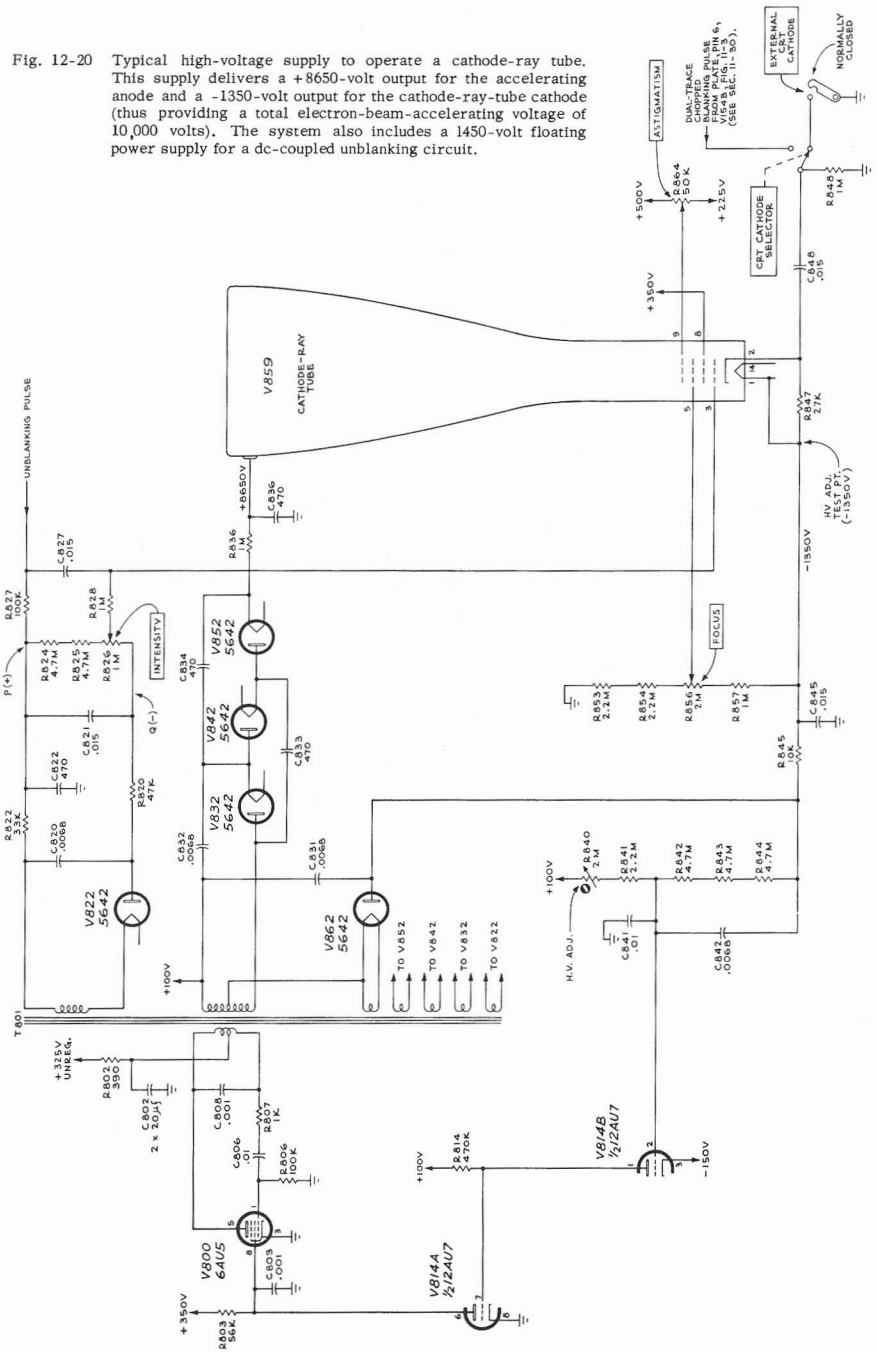

a tapped-off portion of the ac voltage from the transformer winding that drives the voltage tripler. The separate rectifier for this -1350-volt supply is V862, operating as a half-wave rectifier (Sec. 12-3a). C831 filters the output of this supply.

The oscilloscope that includes the power supply of Fig. 12-20 uses a dc-coupled unblanking system (Sec. 11-12c). As we observed in Fig. 11-34, such a system requires a separate floating power supply. In Fig. 12-20, this floating power supply uses V822 as a half-wave rectifier. The floating power supply is rated to deliver 1450 volts between points P and Q in Fig. 12-20.

For one reason or another, the high dc output voltages from the power-supply system of Fig. 12-20 might vary. (One reason for output-voltage variations is that the unregulated +325-volt supply voltage for the oscillator tube V800 might vary, as mentioned in Sec. 12-7e.) To correct any variations in the output voltages from the high-voltage supply, we include a voltage-regulating system in the circuit of Fig. 12-20. This regulating system controls the oscillator-tube screen voltage, thus controlling the radio-frequency power developed by the oscillator. When the oscillator develops the proper amount of power, the high-voltage output values should be correct. As an indication that the oscillator power is correct, we use the fact that the -1350-volt supply delivers its rated output voltage. In Fig. 12-20, we compare the -1350-volt output voltage with a reference voltage that consists of the low-voltage-supply +100-volt-supply. A voltage divider (consisting of R840, R841, R842, R843, and R844) applies a fraction of any voltage change in the -1350-volt-supply output voltage to the grid of amplifier V814B. Amplifier V814A applies any such voltage change to the screen of oscillator V800, in a polarity such as to return the -1350-volt output toward its normal value. We can adjust R840 so that the -1350-volt-supply output voltage is maintained at -1350 volts rather than at some neighboring value.

INDEX

TYPICAL
OSCILLOSCOPE
CIRCUITRY

REVISED
EDITION

TEKTRONIX
INC.